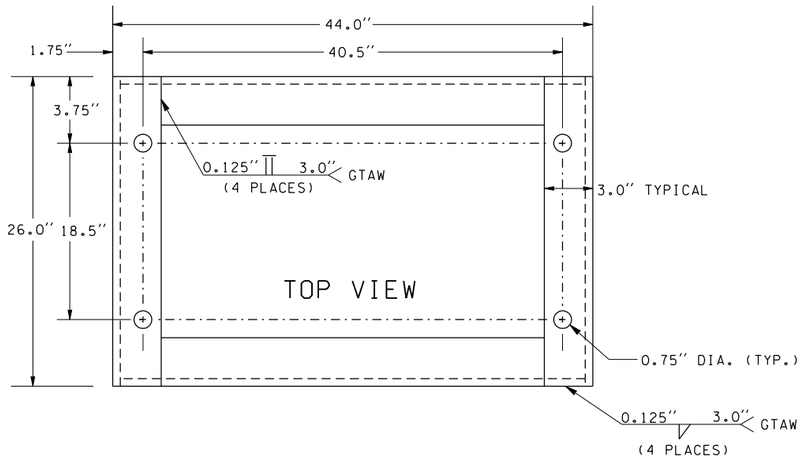

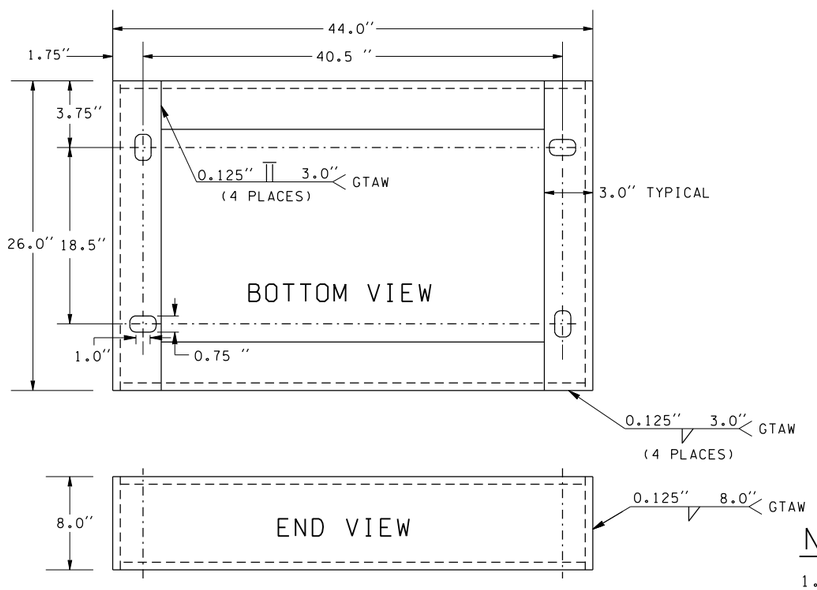

P44 RISER ADAPTER BASE

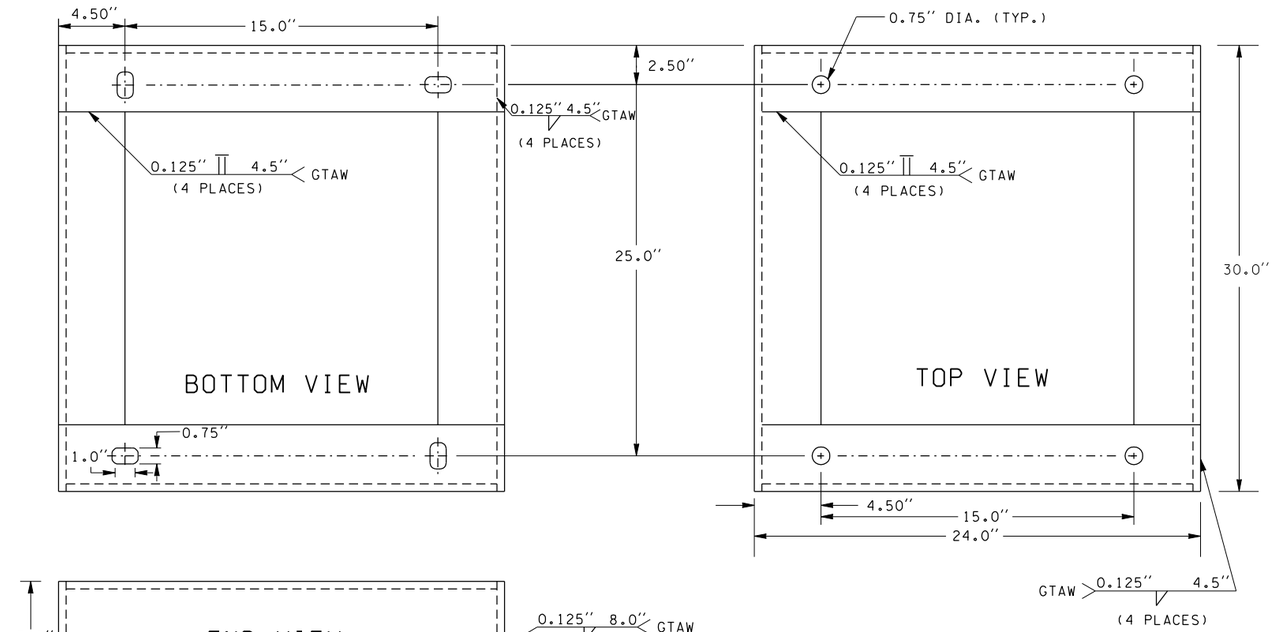

332 RISER ADAPTER BASE

NOTE:

1. FIELD VERIFY BOLT PATTERN & LOCATION PRIOR TO FABRICATION.
2. GROOVE SIZE AND FILLET SIZE ARE EQUAL TO MATERIAL THICKNESS.

* 0.125 INCH SHEET ALUMINUM (5052-H32), MINIMUM THICKNESS.

TOLERANCES

ANGLE	+/- 1 DEGREE
X.XX	= +/-0.125
HOLES	+0.005
	-0.002

GTAW = TIG WELDS

FILE NAME	S:\414126\Electrical\MASTER_FILES\DETAILS Homepage\Ccabinetriser.dgn						PLOT1
TIME	02:22:37 PM			REGION NO. 10	STATE WASH	FED.AID PROJ.NO.	8.20E
DATE	04/07/2005						
PLOTTED BY	trinhha			JOB NUMBER			ENGLISH
DESIGNED BY	**T. THAYER**						
ENTERED BY	**K. NGUYEN**						
CHECKED BY				CONTRACT NO.		LOCATION NO.	
PROJ. ENGR.			1-11-05				
REGIONAL ADM.		REVISION	DATE / BY				

P.E. STAMP BOX DATE

P.E. STAMP BOX DATE

Washington State Department of Transportation

CONTROLLER CABINET RISER DETAILS

SHEET OF SHEETS