Washington State
Department of Transportation

Geotechnical Design Manual

M 46-03.15

December 2021

Environmental and Regional Operations
Construction Division
Geotechnical Office

Americans with Disabilities Act (ADA) Information: This material can be made available in an alternate format by emailing the Office of Equal Opportunity at wsdotada@wsdot.wa.gov or by calling toll free, 855-362-4ADA(4232). Persons who are deaf or hard of hearing may make a request by calling the Washington State Relay at 711.

Title VI Notice to Public: It is the Washington State Department of Transportation's (WSDOT) policy to assure that no person shall, on the grounds of race, color, national origin or sex, as provided by Title VI of the Civil Rights Act of 1964, be excluded from participation in, be denied the benefits of, or be otherwise discriminated against under any of its programs and activities. Any person who believes his/her Title VI protection has been violated, may file a complaint with WSDOT's Office of Equal Opportunity (OEO). For additional information regarding Title VI complaint procedures and/or information regarding our non-discrimination obligations, please contact OEO's Title VI Coordinator at 360-705-7090.

Contents

Chapter 1 Geotechnical Operations and Administration 1-1

1.1 Scope of Geotechnical Design, Construction, and Maintenance Support 1-1

1.2 Role of Offices Providing In-House Geotechnical Design, Construction, and Maintenance Support 1-3

1.3 Geotechnical Support within the WSDOT Project Management Process (PMP) 1-10

1.4 Geotechnical Report Review Process, Certification and Approval Requirements 1-14

1.5 Reports Produced by Consultants or other Agencies for WSDOT 1-18

1.6 Geotechnical Consultant Administration 1-19

1.7 Geotechnical Information Provided to Bidders 1-21

1.8 Sample Retention and Chain of Custody 1-23

1.9 Geotechnical Design Policies and their Basis 1-23

1.10 Geotechnical Construction Support Policies 1-25

1.11 Geotechnical Construction Submittal Review Policies 1-27

1.12 References 1-29

Appendix 1-A Preliminary Geotechnical Engineering Services Scope of Work 1-A-1

Appendix 1-B Geotechnical Engineering Services Scope of Work for PS&E-Level Design 1-B-1

Chapter 2 Project Geotechnical Planning 2-1

2.1 Overview 2-1

2.2 Preliminary Project Planning 2-1

2.3 Development of the Subsurface Exploration Plan 2-8

2.4 Development of the Laboratory Testing Plan 2-15

2.5 References 2-16

Appendix 2-A Field Exploration Request Form 2-A-1

Chapter 3 Field Investigation 3-1
3-1 Overview 3-1
3-2 Activities and Policies – Before Exploration 3-1
3-3 Activities and Policies – During Exploration 3-7
3-4 Activities and Policies – After Exploration 3-10
3-5 Standard Penetration Test (SPT) Calibration 3-11
3-6 References 3-12
3-7 Appendices 3-12
Appendix 3-A Daily Drill Report Form 3-13
Appendix 3-B Portable Penetrometer Test Procedures 3-14
Appendix 3-C Field Investigation Best Management Practices for Erosion and Spill Prevention 3-21
Appendix 3-D Department of Natural Resources Memorandum of Understanding: Drilling Operations – State Owned Aquatic Lands 3-23
Appendix 3-E Geotechnical Field Investigation and Contaminated Drilling Waste Management Procedures 3-29
Appendix 3-F State Materials Laboratory Sample- Handling Policy for Contaminated and Potentially Contaminated Samples 3-30
Appendix 3-G WSDOT Well Tracking Database Information to be Tracked 3-33

Chapter 4 Soil and Rock Classification and Logging 4-1
4.1 Overview 4-1
4.2 Soil Classification 4-1
4.3 Rock Classification 4-9
4.4 References 4-17
Appendix 4-A Test Boring Legend 4-A-1

Chapter 5 Engineering Properties of Soil and Rock 5-1
5.1 Overview 5-1
5.2 The Geologic Stratum as the Basis for Property Characterization 5-1
5.3 Influence of Existing and Future Conditions on Soil and Rock Properties. 5-2
5.4 Methods of Determining Soil and Rock Properties 5-2
5.5 In-Situ Field Testing 5-3
5.6 Laboratory Testing of Soil and Rock 5-6
5.7 Back-Analysis Based on Known Performance or Failure 5-9
5.8 Engineering Properties of Soil. 5-11
5.9 Engineering Properties of Rock. 5-14
5.10 Determination and Use of Soil Cohesion 5-15
5.11 Final Selection of Design Values. 5-16
5.12 Selection of Design Properties for Engineered Materials. 5-21
5.13 Properties of Predominant Geologic Units in Washington 5-24
5.14 Application of the Observational Method to Adjust Design Properties 5-42
5.15 References 5-42

Chapter 6 Seismic Design 6-1
6-1 Seismic Design Responsibility and Policy 6-1
6-2 Geotechnical Seismic Design Considerations. 6-7
6-3 Seismic Hazard and Site Ground Motion Response Requirements 6-17
6-4 Seismic Geologic Hazards 6-27
6-5 Input for Structural Design 6-48
6-6 References 6-57
6-7 Appendices. 6-63
Appendix 6-A Site Specific Seismic Hazard and Site Response. 6-A-1
Appendix 6-B High Resolution Seismic Acceleration Maps 6-B-1

Chapter 7 Slope Stability Analysis 7-1
7.1 Overview 7-1
7.2 Development of Design Parameters and Other Input Data for Slope Stability Analysis 7-1
7.3 Design Requirements 7-2
7.4 Resistance Factors and Safety Factors for Slope Stability Analysis 7-4
7.5 References 7-5

Chapter 8 Foundation Design 8-1
8.1 Overview 8-1
8.2 Overall Design Process for Structure Foundations 8-1
8.3 Data Needed for Foundation Design 8-5
8.4 Foundation Selection Considerations 8-9
8.5 Overview of LRFD for Foundations 8-10
8.6 LRFD Loads, Load Groups and Limit States to be Considered 8-11
8.7 Resistance Factors for Foundation Design – Design Parameters 8-18
8.8 Resistance Factors for Foundation Design – Service Limit States 8-19
8.9 Resistance Factors for Foundation Design – Strength Limit States 8-19
8.10 Resistance Factors for Foundation Design – Extreme Event Limit States 8-19
8.11 Spread Footing Design 8-20
8.12 Driven Pile Foundation Design 8-27
8.13 Drilled Shaft Foundation Design 8-41
8.14 Micropiles 8-46
8.15 Proprietary Foundation Systems 8-46
8.16 Detention Vaults 8-46
8.17 References 8-48
Appendix 8-A Approved Proprietary Foundation Systems (Vacant) 8-A-1
Appendix 8-B Approved AASHTO LRFD Bridge Design Specifications Drill Shaft Design Provisions 8-B-1

Chapter 9 Embankments 9-1
9.1 Overview and Data Needed 9-1
9.2 Design Considerations 9-6
9.3 Stability Mitigation 9-15
9.4 Settlement Mitigation 9-28
9.5 Construction Considerations and PS&E Development 9-30
9.6 References 9-38
Appendix 9-A Examples Illustrating Staged Fill Construction Design 9-A-1

Chapter 10 Soil Cut Design 10-1
10.1 Overview and Data Acquisition 10-1
10.2 Overall Design Considerations 10-5
10.3 Soil Cut Design. 10-6
10.4 Use of Excavated Materials 10-11
10.5 Special Considerations for Loess 10-12
10.6 PS&E Considerations 10-19
10.7 References 10-20
Appendix 10-A Washington State Department of Transportation Loess Slope Design Checklist 10-A-1

Chapter 11 Ground Improvement 11-1
11.1 Overview 11-1
11.2 Development of Design Parameters and Other Input Data for Ground Improvement Analysis 11-2
11.3 Design Requirements 11-3
11.4 References 11-3

Chapter 12 Rock Cut Design 12-1
12.1 Overview 12-1
12.2 Development of Design Parameters and Other Input Data for Rock Cut Stability Analysis 12-1
12.3 Design Requirements 12-1
12.4 References 12-1

Chapter 13 Landslide Analysis and Mitigation 13-1
13.1 Overview 13-1
13.2 Development of Design Parameters and Other Input Data for Landslide Analysis 13-1
13.3 Design Requirements 13-1
13.4 References 13-1

Chapter 14 Unstable Rockslope Analysis and Mitigation 14-1
14.1 Overview 14-1
14.2 Development of Design Parameters and Other Input Data for Unstable Rockslope Analysis 14-1
14.3 Design Requirements 14-1
14.4 References 14-1

Chapter 15 Abutments, Retaining Walls, and Reinforced Slopes 15-1

15-1 Introduction and Design Standards 15-1
15-2 Overview of Wall Classifications and Design Process for Walls 15-2
15-3 Required Information 15-3
15-4 General Design Requirements 15-11
15-5 Wall Type Specific Design Requirements 15-23
15-6 Standard Plan Walls 15-57
15-7 Temporary Cut Slopes and Shoring 15-58
15-8 References 15-70
15-9 Appendices 15-74

Appendix 15-A Preapproved Proprietary Wall and Reinforced Slope General Design Requirements and Responsibilities 15-A-1
Appendix 15-B Preapproved Proprietary Wall/Reinforced Slope Design and Construction Review Checklist 15-B-1
Appendix 15-C Wall/Reinforced Slope Systems Evaluation: Submittal Requirements 15-C-1
Appendix 15-D Preapproved Proprietary Wall Systems 15-D-1
Appendix 15-E MSE Wall Design Using the Stiffness Method 15-E-1
Appendix 15-F Description of Typical Temporary Shoring Systems and Selection Considerations 15-F-1
Appendix 15-G Testing and Acceptance Protocols for Tiebacks in Clay 15-G-1
Appendix 15-H Preapproved Wall Appendix: Specific Requirements and Details for Hilfiker Welded Wire Faced Walls 15-H-1
Appendix 15-I Vacant 15-I-1
Appendix 15-J Preapproved Wall Appendix: Specific Requirements and Details for Reinforced Earth (RECO) Concrete Panel Walls 15-J-1
Appendix 15-K Preapproved Wall Appendix: Specific Requirements and Details for Tensar ARES Walls 15-K-1
Appendix 15-L Preapproved Wall Appendix: Specific Requirements and Details for Tensar MESA Walls 15-L-1
Appendix 15-M Preapproved Wall Appendix: Specific Requirements and Details for Tensar Welded Wire Form Walls 15-M-1
Appendix 15-N Preapproved Wall Appendix: Specific Requirements and Details for SSL Concrete Panel Walls 15-N-1
Appendix 15-O Preapproved Wall Appendix: Specific Requirements and Details for Landmark Reinforced Soil Wall 15-O-1

Appendix 15-P Preapproved Wall Appendix: Specific Requirements and Details for Allan Block Walls 15-P-1
Appendix 15-Q Preapproved Wall Appendix: Specific Requirements and Details for Redi-Rock Positive Connection Walls 15-Q-1
Appendix 15-R Preapproved Wall Appendix: Specific Requirements and Details for Lock and Load Walls 15-R-1
Appendix 15-S Preapproved Wall Appendix: Specific Requirements and Details for KeyGrid Walls. 15-S-1
Appendix 15-T Preapproved Wall Appendix: Specific Requirements and Details for Basalite GEOWALL 15-T-1

Chapter 16 Geosynthetic Design 16-1
16.1 Overview 16-1
16.2 Development of Design Parameters for Geosynthetic Application 16-1
16.3 Design Requirements 16-2
16.4 References 16-2

Chapter 17 Foundation Design for Signals, Signs, Noise Barriers, Culverts, and Buildings 17-1
17.1 General 17-1
17.2 Foundation Design Requirements for Cantilever Signals, Strain Poles, Cantilever Signs, Sign Bridges, and Luminaires - General 17-4
17.3 Noise Barriers. 17-11
17.4 Culverts. 17-16
17.5 Buildings 17-17
17.6 References 17-20

Chapter 18 Geotechnical Design for Marine Structure Foundations 18-1
18.1 Overview 18-1
18.2 Design Philosophy. 18-1
18.3 Load and Resistance Factors for Marine Structures Subject to Ship Impact. 18-1
18.4 References 18-1

Chapter 19 Infiltration Facility Design 19-1
19.1 Overview 19-1
19.2 Geotechnical Investigation and Design for Infiltration Facilities. 19-1
19.3 References 19-1

Chapter 20 Unstable Slope Management 20-1
20.1 Overview 20-1
20.2 References 20-1

Chapter 21 Materials Source Investigation and Report 21-1
21.1 Overview 21-1
21.2 Material Source Geotechnical Investigation 21-1
21.3 Materials Source Report 21-5

Chapter 22 Geotechnical Project Development, Reports, and Support for Design-Build Projects 22-1
22-1 Overview 22-1
22-2 Definitions 22-2
22-3 Purpose and Content of the Geotechnical Reports Included in the Contract Documents . . 22-6
22-4 Geotechnical and Other Reference Documents 22-11
22-5 Geotechnical RFP Development 22-13
22-6 Geotechnical Investigation During RFP Advertisement 22-13
22-7 Geotechnical Support for Design-Build Projects During RFP Advertisement and Post-Award 22-14
22-8 References 22-15
22-9 Appendices 22-15
Appendix 22-A Example Supplemental Geotechnical Boring Program ITP Language . 22-A-1

Chapter 23 Geotechnical Reporting and Documentation 23-1
23.1 Overview and General Requirements 23-1
23.2 Report Certification and General Format 23-1
23.3 Geotechnical Office Report Content Requirements 23-7
23.4 Information to Be Provided in the Geotechnical Design File 23-21
23.5 Consultant Geotechnical Reports and Documentation Produced on Behalf of WSDOT . . 23-24
23.6 Summary of Geotechnical Conditions 23-25
Appendix 23-A PS&E Review Checklist 23-A-1
Appendix 23-B Typical Design Cross-Section for a Deep Foundation 23-B-1

Chapter 1 Geotechnical Operations and Administration

1.1 Scope of Geotechnical Design, Construction, and Maintenance Support

The focus of geotechnical design, construction, and maintenance support within the context of WSDOT is to ensure that the soil or rock beneath the ground surface can support the loads and conditions placed on it by transportation facilities. Typical geotechnical activities include the following:

- subsurface field investigations
- geologic site characterization, laboratory testing of soil and rock
- structure foundation and retaining wall design
- soil cut and fill stability design
- subsurface ground improvement
- seismic site characterization and design
- rock slope design
- unstable slope management
- unstable slope (e.g., rock fall, landslides, debris flow, etc.) mitigation
- infiltration, subsurface drainage and related hydrogeologic design
- material source (pits and quarries) evaluation
- long-term site monitoring for geotechnical engineering purposes
- support to Regional construction staff regarding geotechnical issues and contractor claims
- support to Regional maintenance staff as geotechnical problems (e.g., landslides, rock fall, earthquake or flood damage, etc.) arise on transportation facilities throughout the state

A geotechnical investigation is conducted on all projects that involve significant grading quantities (including state owned materials source development), unstable ground, foundations for structures, and ground water impacts (including infiltration). The goal of the geotechnical investigation is to preserve the safety of the public who use the facility, as well as to preserve the economic investment by the State of Washington.

As defined in this manual, geotechnical engineering is inclusive of all the aspects of design and construction support as described above, and includes the disciplines of foundation engineering and engineering geology. Geotechnical engineering shall be conducted by engineers or engineering geologists who possess adequate geotechnical training and experience. Geotechnical engineering shall be conducted in accordance with regionally or nationally accepted geotechnical practice, and the geotechnical engineering practice as defined by this manual. Geotechnical engineering shall be performed by, or under the direct supervision of, a person licensed to perform such work in the state of Washington, who is qualified by education or experience in this technical specialty of engineering per WAC 196-27A. For work that does or

does not require certification by a professional engineer, but does require certification by a licensed engineering geologist (LEG), such work also shall be performed by, or under the direct supervision of, a person licensed to perform such work in the state of Washington, who is qualified by education or experience in this technical specialty per WAC 308-15.

1.1.1 Geotechnical Design Objectives for Project Definition Phase

For the project definition phase, the geotechnical recommendations provided will be at the conceptual/feasibility level, for the purpose of developing a project estimate to establish the transportation construction program to be approved by the legislature. The investigation for this phase usually consists of a field reconnaissance by the geotechnical designer and a review of the existing records, geologic maps, and so forth. For projects that lack significant geotechnical information or are complex, test pits/borings may be completed and/or geophysical investigation performed at critical locations for development of the project definition with approval of the State Geotechnical Engineer.

A key role of the geotechnical designer in this stage of a project is to identify potential fatal flaws with the project, potential constructability issues, and geotechnical hazards such as earthquake sources and faults, liquefaction, landslides, rockfall, and soft ground, for example. The geotechnical designer shall provide conceptual hazard avoidance or mitigation plans to address all the identified geotechnical issues. An assessment of the effect geotechnical issues have on construction staging and project constructability must be made at this time. Future geotechnical design services needed in terms of time, cost, and the need for special permits to perform the geotechnical investigation (critical areas ordinances), are determined at this time. This preliminary geotechnical information is intended to inform where significant modifications to the preliminary design should be considered prior to advancing to the design stage and where significant cost impacts may be realized, such as relocation of the alignment, horizontal and vertical alignment changes, addition or elimination of structures, etc. Geologic/geotechnical input during this initial project phase is critical for complex projects.

1.1.2 Geotechnical Design Objectives for Project Design Phase

It is in this phase that the Region office, or civil consultant, refines and defines the project's alignment, sets profiles and grade, and identifies specific project elements to be addressed by specialty groups within WSDOT, or other consultants. Once the preliminary project elements and alignments for the project are established, the geotechnical designer will assess feasible cut and fill slopes to enable the Region or civil consultant to establish the right-of-way needs for the project. Where walls may be needed, using approximate wall locations and heights identified by the Region, an assessment of feasible wall types is performed by the geotechnical designer, primarily to establish right-of-way and easement needs (as is true for slopes).

The Region will identify potential locations for infiltration/detention facilities, and the geotechnical designer shall begin investigating and assessing if the selected sites are suitable for infiltration. The geotechnical data and analysis needed to assess infiltration/detention facility size and feasibility, including the seasonal ground water measurements necessary to meet the requirements in the *Highway Runoff Manual*

(HRM) are also obtained. Sizing of the infiltration/detention facilities is conducted at this time to make sure enough right-of-way is available to address the project storm-water requirements.

Conceptual and/or more detailed preliminary bridge foundation design, for example, Type, Size, & Location (TS&L), if required, may be conducted during this phase, if it was not conducted during project definition, to evaluate bridge alternatives and develop a more accurate estimate of cost.

Before the end of this phase, the geotechnical data necessary to allow future completion of the PS&E level design work is gathered (final geometric data, test hole data, and so forth.)

1.1.3 Geotechnical Design Objectives for PS&E Development Phase

It is in this phase that final design of all geotechnical project features is accomplished. Recommendations for these designs, as well as special provisions and plan details to incorporate the geotechnical design recommendations in the PS&E, are provided in the geotechnical reports and memorandums prepared by the geotechnical designer. This manual, AASHTO Specifications, and WSDOT's various engineering publications provide specific design requirements for this phase of design. Detailed recommendations for the staging and constructability of the project geotechnical features are also provided.

1.2 Role of Offices Providing In-House Geotechnical Design, Construction, and Maintenance Support

1.2.1 Lead Role for WSDOT Regarding Geotechnical Policy and Design

Based on an executive level policy decision initiated in 1980, formally implemented in 1983, and later formally documented in the *Design Manual* M 22-01, geotechnical design, construction support, and maintenance support functions are centralized as a Headquarters function. As a result of this executive decision, the Headquarters (HQ) Materials Laboratory was directed to begin obtaining staff with specialized geotechnical expertise and to maintain that specialized expertise. The regions were directed to retain the Region Materials Engineer position, and that Region Materials staff be trained in the area of soils to the degree possible to be able to function as an effective liaison with the HQ Materials Laboratory geotechnical personnel. However, the major geotechnical work (see Section 1.2.2) is to be conducted by the HQ's staff, based on this executive policy.

The Geotechnical Office, within the Construction Division, hereinafter referred to as the Geotechnical Office, is the State's expert for all geotechnical design and construction work. The Geotechnical Office provides direct geotechnical design, technical oversight for all consultant geotechnical design, and quality verification on design-build projects.

How the geotechnical design will be accomplished will be identified in the Project Management Plan (PMP) at the initiation of a project. The PMP will include the initial scope, schedule and budget of the geotechnical design work. As the project develops, scope schedule and budget may be revised through the change management plan. The PMP will also include how the project manager, Region Materials Lab and

the Geotechnical Office will work together to provide the oversight and expertise necessary to retain a strong owner role, thus ensuring a geotechnical design product that is consistent with WSDOT policy and developed in the best interest of the state.

The Geotechnical Office provides the lead regarding the development and implementation of geotechnical design policy for WSDOT. The State Geotechnical Engineer is the final approval authority for geotechnical policy, and for geotechnical investigations and designs conducted statewide for WSDOT projects. Geotechnical policies are contained in the *Design Manual* (e.g., Chapters 610, 630, and 730), the Standard Plans, the Standard Specifications, and in General Special Provisions in addition to this *Geotechnical Design Manual*. The State Geotechnical Engineer is also the final approval authority regarding geotechnical designs conducted by others (e.g., local agencies, developers, etc.) that result in modification to transportation facilities that are under the jurisdiction of WSDOT or otherwise impact WSDOT facilities. For cases where geotechnical design is being conducted by others on behalf of WSDOT, such as by consultants working directly for WSDOT and geotechnical consultants working for design-builders, where this GDM states that approval of the WSDOT State Geotechnical Engineer is required, that approval authority is not transferrable to the designer of record (e.g., for a design-builder). Where this GDM states that approval by the State Geotechnical Engineer is required, these are WSDOT design policy issues, not designer of record design decisions. See Section 22.6 for additional discussion on this issue as it applies to design-build contracts.

The functional structure of the Geotechnical Office is provided in Figure 1-1.

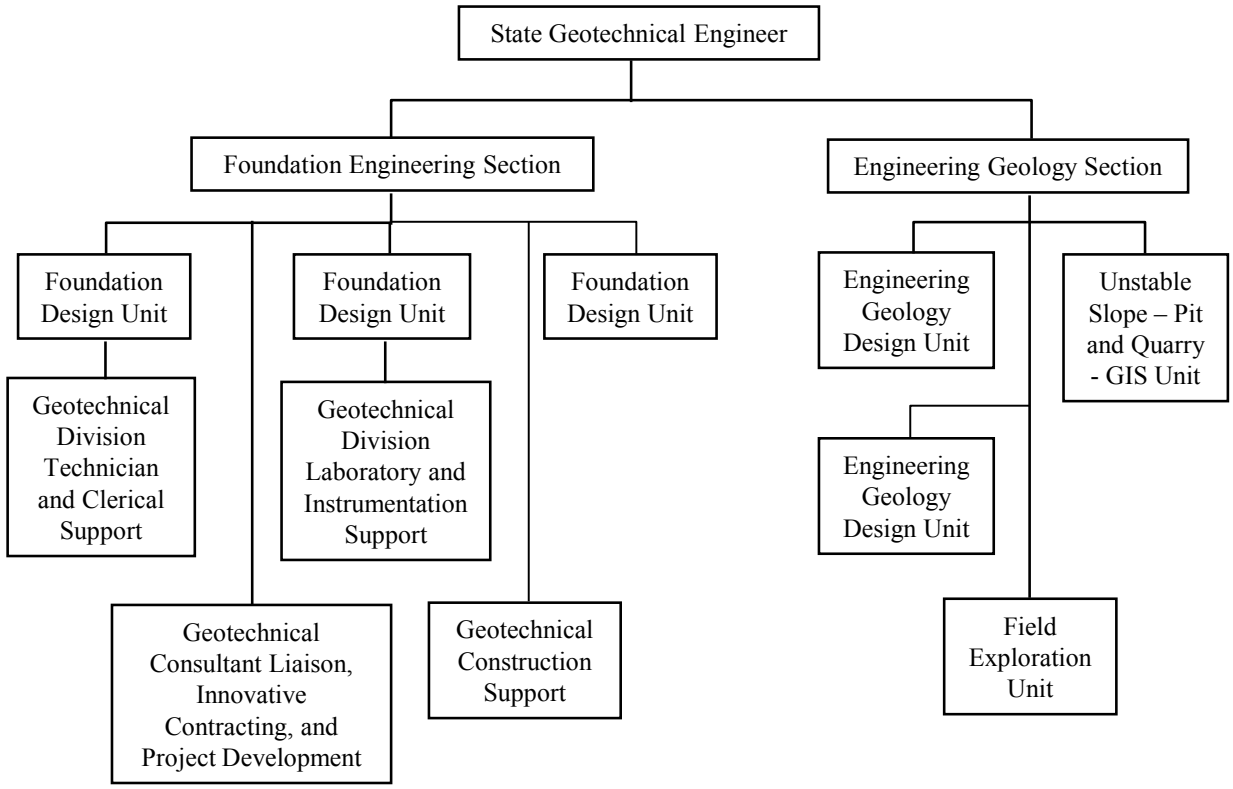

Functional Organization of the WSDOT Geotechnical Office
Figure 1-1

1.2.2 Geotechnical Functions Delegated to the Regions

Some geotechnical functions have been delegated to the Region Materials Engineers (RME), as described in the *Design Manual* M 22-01 Chapter 610. In general, the RME functions as the initial point of contact for all geotechnical work, with the exception of Bridge Office, Washington State Ferries (WSF), and Urban Corridors Office (UCO) projects. If the geotechnical work required is relatively straightforward (in that the ground is stable and relatively firm, bedrock is not involved, the design is not complicated by high ground water or seepage, and the design of the project geotechnical elements does not require specialized geotechnical design expertise), the RME takes the lead in conducting the geotechnical work. If this is not the case, the RME asks for the involvement and services of the Geotechnical Office. The Geotechnical Office responds to and provides recommendations directly to the WSDOT Office responsible for the project, but always keeps the RME informed. For structural projects (bridges and tunnels, for example), the Bridge and Structures Office works directly with the Geotechnical Office. For WSF projects, the Terminal Engineering Office works directly with the RME or the Geotechnical Office, depending on the nature of the project. For UCO projects, the Geotechnical Office handles all geotechnical work.

General guidelines and requirements regarding coordination of geotechnical work are provided in the *Design Manual* M 22-01 Section 610.04. Figure 1-2 illustrates the division of geotechnical design responsibility between the region materials offices and the Geotechnical Office and is consistent with the *Design Manual.* The Region Materials Engineers (RME) and their staff, and the Geotechnical Office personnel should communicate on a regular basis as projects requiring geotechnical input develop. The RME should be viewed as the Geotechnical Office's representative in the region. The RME's function as the initial point of contact for geotechnical work in their respective regions in that the RME will be evaluating the projects included in the construction program within their respective regions at the beginning of the design phase for those projects, and deciding if the nature of the work included in those projects will require Geotechnical Office involvement and design support. Similarly, during the project definition phase, the RME functions as the initial point of contact regarding geotechnical issues. If it appears the nature of the geotechnical issues that need to be addressed to develop an accurate project definition will require Geotechnical Office assistance, the RME is responsible to contact the Geotechnical Office to obtain geotechnical input for the project. Figure 1-2 should be used as a guide for this purpose for project definition, design, and PS&E development, but some judgment will be required, as specific projects and/or conditions may not completely fit the project categories listed in Figure 1-2. The RME office and the Geotechnical Office must view themselves as a team to get the geotechnical work accomplished from project inception to completion of the construction. If the RME is not sure if Geotechnical Office involvement is needed, the RME and Geotechnical Office should discuss the project needs together.

For geotechnical work that is clearly the responsibility of the RME to complete based on Figure 1-2, the RME should complete the geotechnical subsurface site investigation plan, perform the design, and complete the region soils report. For those regions that do not have the resources (i.e., drill crews) to carry out the geotechnical subsurface site investigation, the RME submits the plan to the State Geotechnical Engineer, or the individual delegated to act on behalf of the State Geotechnical Engineer. In this case, the subsurface site investigation is carried out by the Geotechnical Office's Field Exploration Unit. If the results of the site investigation demonstrate that the project geotechnical design is still a RME responsibility, the data from the site investigation will be provided to the RME and the RME will complete the geotechnical design and report. If the subsurface conditions are such that HQ involvement is required, the Geotechnical Office will discuss the design responsibility with the RME. If, due to the nature of the project or the potential subsurface conditions, it is not clear if the design will be a HQ or region responsibility, the RME should contact the Geotechnical Office for assistance in planning, and if necessary to carry out, the geotechnical investigation and design.

With regard to division of work between the Geotechnical Office and the RME, Figure 1-2 indicates that HQ involvement is required if the soils appear to be soft or unstable. As a general guide, granular soils classified as loose or very loose (i.e., N ≤ 10 blows/ft) and clays classified as very soft to stiff (N ≤ 15 blows/ft) should be considered potentially unstable, especially if they are wet or are exhibiting signs of instability such as cracking or slumping. When such soils are encountered by the RME, whether or not the work should be retained by the RME should be discussed with the Geotechnical Office to determine of more detailed input from HQ regarding the stability of the soils encountered is needed.

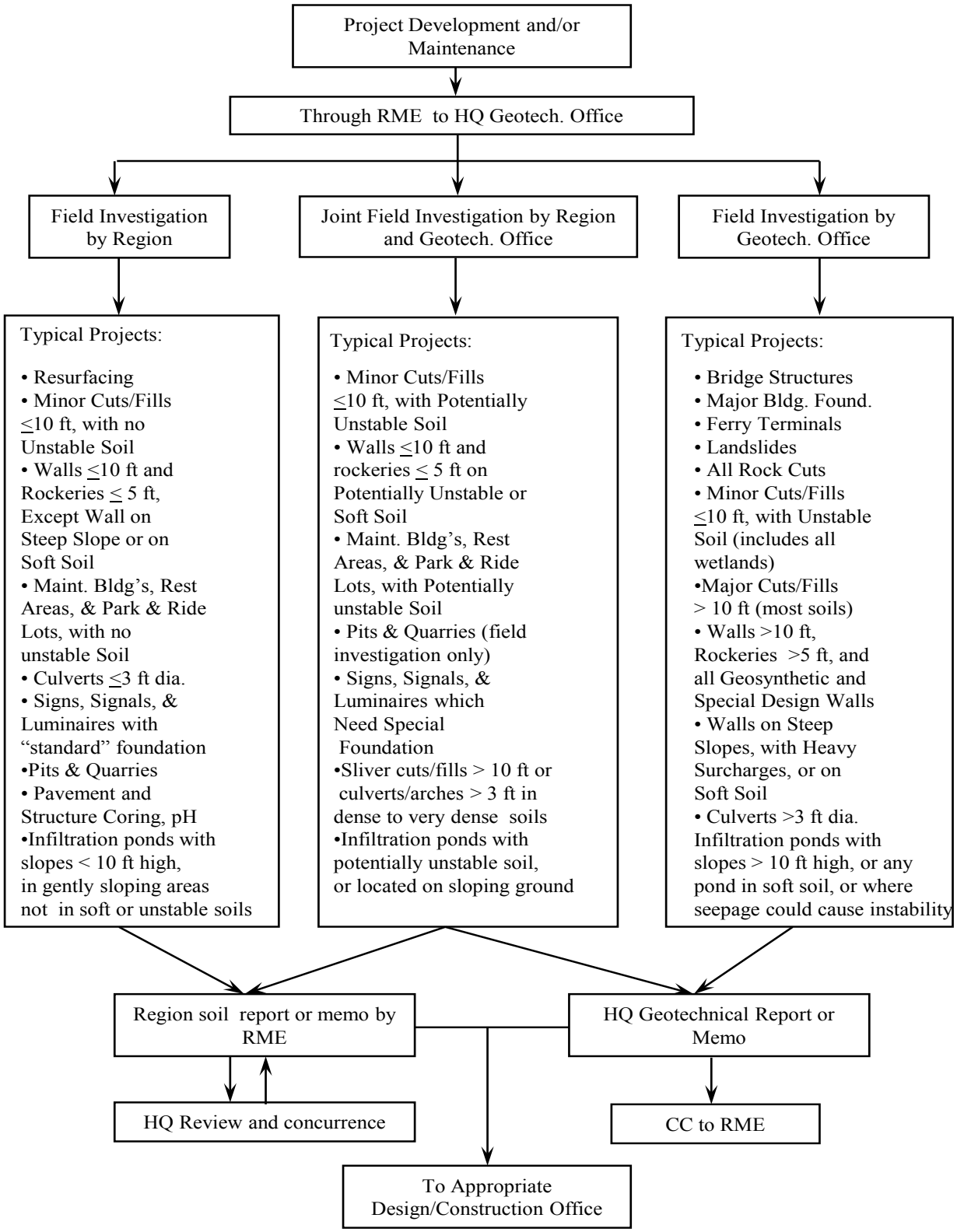

Geotechnical Design Workflow and Division of Responsibility
Figure 1-2

1.2.3 Coordination between HQ's and Region Regarding Emergency Response

The need for emergency geotechnical response is primarily the result of slope failure, rockfall events, flooding, or earthquakes. For the case of slope failure (including retaining walls) and rockfall events, and slope failure caused by flooding or earthquakes, the following process should be used:

1. Once the failure occurs, Region Maintenance conducts an initial evaluation of the site.
2. If there is any question as to the stability of the affected slope and the potential for future slope movement or rockfall, the Region Maintenance Office should contact the Regional Materials Engineer (RME).
3. The RME performs a site review as soon as possible to assess the magnitude of the problem, and to determine if Geotechnical Office assistance is needed. To save time, the RME may, at the RME's discretion, skip the RME field review and transfer the field review and all design responsibilities fully to the Geotechnical Office, if it is obvious that HQ involvement will be needed. If it is determined that a detailed geotechnical evaluation by the Geotechnical Office is not needed (e.g., conditions are not geologically complex, the failure is limited in extent, and the risk of continued slope movement or instability is low, and slope stabilization methods are not required), the RME provides recommendations to complete the cleanup and facility repair.
4. If it is determined that there is a real threat of continued slope movement, instability, or rockfall, there are geological complexities at the site that will require a more detailed geotechnical analysis to assess the potential threat, or if an engineered slope stability mitigation may be required, the RME immediately contacts the Geotechnical Office to complete the initial evaluation. This contact may initially take the form of a phone call and/or e-mail with photos, and as soon as possible a joint site review, if the Geotechnical Office feels it is warranted.
5. The Geotechnical Office specialist(s) responds as soon as possible and comes to site to make an initial assessment. The specialist provides the Region (on site) with that assessment and the risk(s) associated with that assessment. The assessment includes evaluation of the cause(s) of the instability, the potential for future instability, whether or not the threat of future instability is immediate, the potential threat to public and worker safety, and the need for slope stabilization measures.
6. The Region (typically a project office) should use the field recommendations provided by the Geotechnical Office specialist to begin developing a scope of work and cost estimate to complete the emergency work concurrently with Geotechnical Office management review of the field recommendations, and will immediately contact the region if any changes in the recommendations are needed as a result of the technical review of the recommendations.

7. Based on the assessment and recommendations, the Region evaluates risk(s) and cost to mitigate the problem. The Region then makes a decision to either immediately repair the slope and facility, opening up the facility to the public, or to close, maintain closure, or otherwise limit facility public access. If the risk is too high to immediately repair the facility and/or open it up to full public access, the Region requests the Geotechnical Office for a more complete evaluation and stabilization recommendation.
8. Once stabilization recommendations are developed, the slope is stabilized, and the facility is reopened. During the stabilization construction activities, the point of contact to address any problems that occur and to review the acceptability of the finished stabilization measures is the office which developed the stabilization recommendations.
9. Since multiple activities conducted by several offices must occur simultaneously to address an emergency slope problem, frequent stakeholder meetings or conference calls should be conducted throughout the duration of the emergency project (design and construction) to keep all stakeholders informed and to make intermediate decisions as needed. These stakeholder meetings or conference calls should occur at key junctures in the development of the project, or as needed based on the specific needs and duration of the project.

Flood or seismic events can also result in emergency conditions that need geotechnical evaluation. Other than the slope stability issues addressed above, such events can affect the integrity of bridges and other structures. In these situations, other than keeping the RME informed of the situation, the process for geotechnical evaluation primarily involves the Bridge Office. If the structure is under the jurisdiction of WSF, then WSF would be responsible to initiate the geotechnical investigation instead of the Bridge Office. In these cases, the process is generally as follows:

1. Once the failure or structure distress occurs and becomes known, the Bridge Office (or WSF for marine and terminal work) conducts an initial evaluation of the structure.
2. If there is damage or potential damage to the structure foundation, the Bridge Office or WSF contacts the Geotechnical Office to conduct an initial evaluation to assess the problem, identify potential risks to the structure and the public, and develop preliminary solutions. The HQ Geotechnical Office should notify the RME regarding the problem at this point, and discuss with the RME any involvement the Region Materials Office may need to have.
3. Based on this initial evaluation, the Bridge Office, in concert with the Region, or WSF in the case of marine or terminal facilities, determines whether or not to restrict public access, or to close the facility, and whether or not to proceed with a more complete geotechnical investigation to develop a repair or replacement for the structure foundation.
4. If it is determined that a more complete geotechnical investigation is needed, the Geotechnical Office proceeds with the investigation and develops design recommendations.

1.3 Geotechnical Support within the WSDOT Project Management Process (PMP)

By Executive Order E1032.00, all phases of WSDOT capital transportation projects are to be delivered according to the principles and practices of the Project Management Process (PMP). In general, the PMP includes five main steps. These steps are "Initiate and Align," "Plan the Work," "Endorse the Plan," "Work the Plan," and "Transition and Closure."

Prior to or during the initiate-and-align step, the project manager should contact the RME to determine if the nature of the project could require Geotechnical Office involvement. If it appears that Geotechnical Office involvement may be required, the RME should make arrangements to have a Geotechnical Office representative included in PMP activities. Note that at this point, detailed project site data will likely not be available. Therefore, this determination by the RME will likely need to be made based on conceptual project data, and possibly a project site review. This determination must be made early in the project development process. For example, if the project is defined for PMP to include the development of the project definition (see Section 1.1.1), this determination must be made at the beginning of the project definition phase. If the project is defined instead to include only the project design and PS&E development phases (see Sections 1.1.2 and 1.1.3), this determination must be made at the beginning of the project design phase, as the office responsible for the geotechnical design work should be included in the planning for the project.

1.3.1 Initiate and Align

Assuming geotechnical design services will be needed to complete the project, during the "Initiate and Align" step, the individual/office responsible to provide geotechnical support (i.e., either the Geotechnical Office, the RME Office, or both) should be included in the project team by the project manager. Once included in the team, the geotechnical PMP team member (in general, this individual is also the geotechnical designer for the project) should, as a minimum, participate in the "Initiate and Align" efforts to provide input regarding roles and responsibilities, boundaries, and measures of success.

1.3.2 Plan the Work

During the "Plan the Work" step, the geotechnical PMP team member should provide input to the team regarding the project specific Work Breakdown Structure (WBS) developed from the Master Deliverables List (MDL), and the input necessary to develop the project budget and schedule. This would include a detailed analysis of how long it will take to perform the geotechnical tasks needed to complete the project, any individual task dependencies that affect task sequencing and the interrelationship between the geotechnical tasks and tasks to be completed by other team members, and how much it will cost to complete those tasks. It is the responsibility of the geotechnical PMP team member to coordinate the resource needs for the subject project with the resource needs of other projects that require geotechnical input, so that the proposed project delivery schedule can be achieved. The geotechnical PMP team member will also coordinate with the project team and with the Geotechnical Office management regarding the decision to use geotechnical consultants, if required to achieve the desired project schedule milestones. The

geotechnical PMP team member also provides technical oversight of and coordination with any geotechnical consultants being used for the project.

The geotechnical PMP team member should also provide input to the team regarding potential risks or changes in the geotechnical area that could affect project schedule, budget, or scope, and provide a strategy to deal with those risks or changes. Examples of geotechnical risk include potential difficulties in getting drilling permits or right-of-entry, uncertainties in the scope of the geotechnical investigation required due to unknown subsurface conditions, mitigation of unstable ground, liquefaction or other seismic hazards, etc.

The geotechnical PMP team member should also provide the team with a plan regarding how geotechnical investigation and design quality, as well as how the accuracy of geotechnical design schedule and budget, will be assured.

1.3.3 Endorse the Plan

Once the work has been planned, the next step is to "Endorse the Plan." In this step, the geotechnical aspects of the Project Management Plan should be endorsed by the management of the office responsible to carry out the geotechnical work (e.g., if the Geotechnical Office is responsible for completing geotechnical work for the project, the Geotechnical Office management should endorse the plan). Note: The Project Management Plan must be reviewed and endorsed by Region Management.

1.3.4 Work the Plan

In the "Work the Plan" step, the geotechnical PMP team member will track the schedule and budget for the geotechnical work as it progresses, keeping the project team informed regarding the progress of the geotechnical work as identified in the project Communication Plan. If changes in the geotechnical schedule and/or budget are likely due to unanticipated problems, scope changes, or other inaccuracies in the geotechnical schedule or budget, the geotechnical PMP team member is responsible to inform the project team as far in advance as possible so that adjustments can be made. The frequency of reporting to the team on the progress of the work is identified in the Communication Plan and should be decided based on the needs of the project, recognizing that excessive progress reporting can, in itself, impact the schedule and budget for the work due to the time it takes to develop the interim reports. As problems or changes occur in the project, the geotechnical PMP team member assists the project team to address those problems or changes.

In general for this step, the geotechnical PMP team member completes, or arranges for the completion, of the geotechnical report for the project, and assists the team in the development of contract documents needed to construct the project. In the case of design-build projects, see Chapter 22 regarding the deliverables needed.

1.3.5 Transition and Closure

The geotechnical PMP team member should coordinate with the project team regarding the "Transition and Closure" activities that require geotechnical input and assistance. This may include documenting the geotechnical design decisions made, and identifying construction contract specifications that need to be reevaluated at a later time, should the project PS&E be put on the shelf until adequate funding

is available. The geotechnical PMP team member should also make the geotechnical project file ready for long-term storage, making sure that if another geotechnical designer must work on the project, that the calculations and logic for the decisions made are easy to follow.

1.3.6 Application of the PMP to Construction

If possible, the geotechnical PMP team member should continue to provide geotechnical support to the project through construction, functioning as the Geotechnical Advisor for the construction project, to minimize any transition issues between the design and construction phases. The Geotechnical Advisor would become part of the construction project team in the initiate and align step, and would participate with the team to define roles and responsibilities, boundaries, and Measures of Success, assist in planning for risk and/or change, assist in the quality assurance and control of the project geotechnical features, and help the project team to manage risks and change as they occur.

1.3.7 Master Deliverables to be Considered

The geotechnical PMP team member will need to provide information regarding the geotechnical deliverables and tasks in the Master Deliverables List (MDL) (see Table 1-1) to the project team for consideration in developing the project schedule. For many deliverables, the region Project Office will need to provide information before the geotechnical work can begin. The master deliverables provided in Table 1-1 are current as of August 2006. Note that scoping (termed "Project Definition" in Section 1.1.1), Design, and PS & E are combined into one phase, "Preconstruction", in the MDL.

All tasks and subtasks under WBS Code PC-21 in Table 1-1 are used to accomplish the geotechnical work needed to complete the project definition (see Section 1.1.1). Regarding “Preliminary Site Data” (WBS Code PC-21.01), this information should be provided by the Project Office to the RME to be consistent with the process described in Sections 1.2.2 and 1.3. Refer to the *Design Manual* M 22-01, Section 610.04 for specifics regarding what information is to be submitted. Note that for the bigger, more complex projects where some limited field explorations may be needed, this task would also require the project office to obtain, or to make arrangements to obtain, drilling permits and right-of-entry. Supplying the necessary site data and permits should be considered a predecessor task to MDL task PC-21.03.

If it appears that Geotechnical Office involvement may be required, the RME should make arrangements to have a Geotechnical Office representative included in the geotechnical work to complete the project definition as discussed previously. Each office that is involved provides input data for these deliverables in terms of time and cost to complete the task, and the deliverables themselves. If both offices are involved, the Project Office will need to add the cost required to accomplish the work from both offices to obtain the total cost for each task.

Regarding the schedule to complete PC-21.03, the RME and Geotechnical Office efforts can, in general, be conducted concurrently. Regarding the “Conceptual Geotechnical Report,” up to two reports may need to be produced, one for the RME work and one for the Geotechnical Office work, if both offices need to be involved

in this project phase for the given project. This deliverable should contain the cost estimate, schedule, and scope of work to complete the final project design through PS&E, and should discuss the potential geotechnical risk issues that need to be addressed to construct the project, to establish the scope and budget to construct the overall project.

WBS Code	Task Name	Task Description	Work Op
PC-18.03	Discipline Reports - Earth (Geology & Soils)	*Environmental Procedures Manual* Section 420 Earth (Geology & Soils)	0136
PC-20.03	Materials Source Report	A report on a specific WSDOT material source that verifies the quality and quantity of the material requested	0156
PC-21	Geotechnical Evaluations	Development of Geotechnical reports for project.	
PC-21.01	Preliminary Site Data	Project design office is to provide a project description and location of work to be performed to Region Materials Engineer. See *Design Manual* M 22-01 Chapter 610.	0140
PC-21.02	Environmental Permit for Field Exploration	Field exploration may require permits to complete. Permits need to be provided by the Project Office to Geotechnical Office/Region Materials Office to enable required field work to be started.	0138
PC-21.03	Conceptual Geotechnical Report	RME/Geotechnical Office will provide recommendations at the conceptual / feasibility level. Some soil borings may be drilled at this time depending upon project scope and available information.	0140
PC-21.04	Project Site Data	Site information provided to RME by the project design office (specific to the type of project) to initiate geotechnical work on a project during the design and PS&E phases. See *Design Manual* M 22-01 Chapter 610.	0140
PC-21.05	RME Geotech Report(s)	Region Geotechnical Report containing geotechnical recommendations and information applicable to the project. There is a possibility of multiple reports, depending upon the scope and complexity of the project.	0140
PC-21.06	HQ Geotechnical Report(s)	HQ Geotechnical Report containing geotechnical recommendations and information applicable to the project. There is a possibility of multiple reports, depending upon the scope and complexity of the project.	0140
PC-37.02	Summary of Geotechnical Conditions	Geotechnical Office and/or Region Materials prepares summary of geotechnical conditions for inclusion into the PS&E as Appendix B.	0140
PC-43.03	Project Geotechnical Documentation Package	Printing of pertinent geotechnical reports for sale to prospective bidders. Prepared by Geotechnical Office and/or Region Materials and printed by HQ Printing Services.	0140

Geotechnical Items in Master Deliverables List (MDL)
Table 1-1

WBS codes PC-21.04, PC-21.05, PC-21.06 and WBS codes PC-37.02 and PC-43.03) in Table 1-1 are used to accomplish the geotechnical work to complete the project design and final PS&E (see Sections *1.1.2* and 1.1.3). Regarding "Project Site Data" (WSB code PC-21.04), the Project Office provides the site data to the office designated to take the lead (i.e., the Geotechnical Office, the RME, or both) regarding the geotechnical work, as determined during the "Initiate and Align" step for the project.

Refer to the *Design Manual* M 22-01 Section 610.04 for specifics regarding the information to be submitted. This task would also require the project office to obtain, or to make arrangements to obtain, drilling permits and right-of-entry, if the necessary permits were not obtained in WBS code PC-21.02 or if they need to be amended. Supplying the necessary site data and permits should be considered a predecessor task to MDL tasks PC-21.05 and PC-21.06. The RME and Geotechnical Office efforts can, in general, be conducted concurrently. Note that WBS Codes PC-21.05 and PC-21.06 must be completed before WBS Codes PC-37.02 and PC-43.03.

1.4 Geotechnical Report Review Process, Certification and Approval Requirements

The following sections provide minimum requirements to insure the quality of the geotechnical work conducted by or for WSDOT.

The following terms are used herein:

Quality Control (QC) -- QC is performed by the individual performing the work while the work is being performed and includes all activities performed to control the level of quality produced in the end product. It consists of self-checking to ensure that work is completed in conformance with this manual and standards of practice. It includes checking for errors, omissions, and making sure that all the project elements work together coherently.

Quality Assurance (QA) -- Is performed by a person's supervisor or another individual not involved in the technical details. It is a system of external review and audit procedures conducted as an independent objective review by a third party to assess the effectiveness of the QC program and the quality, completeness, accuracy, and precision of the work being performed, and that it is consistent with design standards.

Quality Verification (QV) – Is performed prior to releasing geotechnical work products to their intended recipients for geotechnical work performed internal to WSDOT. For work performed outside WSDOT (e.g., consultants), this step is performed by WSDOT prior to acceptance of the final work products. The purpose of this step in the quality process is to verify that the QC/QA process used by the designer was effective for producing a geotechnical work product of acceptable quality that meets design standards. If, through conducting the QV it appears that the QC/QA process was not fully followed or if it appears that design standards may not have been met, QV may include a more detailed review of the design, including, as needed, comparative QV geotechnical analyses, to help identify the specific concerns.

All individuals, regardless if they are WSDOT staff or not, who are involved in geotechnical design are responsible for QC self-checking of their work. Each individual shall check their own work for compliance with this manual, standards of practice, errors, and omissions. Individuals are to correct their work before sending their work to the next individual(s) in the process of producing final geotechnical products.

The following sections define and describe the Quality Control/Quality Assurance (QC/QA) process that should be used.

1.4.1 Quality Control/Quality Assurance/Quality Verification for Geotechnical Work Produced by the RME's

The RME is fully responsible for the QC/QA of the geotechnical work they perform. The RME completes their geotechnical recommendations, certifies them as described in Section 1.4.3, and sends them to the Geotechnical Office for QV review and concurrence. If the Geotechnical Office finds the recommendations are not consistent with department policy or a significant error appears to have occurred (i.e., the QC/QA process appears to have not been followed), the Geotechnical Office may require that the RME produce an amendment to the recommendations.

1.4.2 Quality Control/Quality Assurance/Quality Verification for Geotechnical WorkProduced by the Geotechnical Office

Geotechnical Project Managers (GPM) not only have a QC role for their own work, they also have a QA role for the work of geotechnical design staff, support staff, and peers who may be assisting them with portions of their projects. The GPM is tasked with ensuring that the geotechnical work for their project is complete, thorough, accurate, and error free. To accomplish this task, the GPM shall perform QA review of the work that is performed by others in support of the project. If there are issues with the work that is performed, the GPM is responsible to ensure that the issue is resolved by working with the other individuals on the team and their supervisors. If necessary, the GPM will escalate issues upward through the supervisory chain to achieve successful resolution.

It is expected that GPM's will seek QA review from their supervisors, peers, or from other subject matter experts within the Office to ensure that the work they perform is of the highest quality. A peer review process or subject-matter-expert review is encouraged for unusual or highly technical project elements. After supervisory, peer, or subject-matter-expert review is completed, QV review will be performed by senior staff and the State Geotechnical Engineer prior to work being released to office customers.

For emergency projects or projects requiring preliminary information to keep moving forward, QC, QA, and QV reviews shall not be neglected.

Field Exploration Plans

The GPM is responsible for developing the field exploration plan (See Section 2.3). Before these plans are implemented, the project manager's supervisor is responsible to provide quality assurance for these plans to make sure they are complete, that they consider the available existing data, and that they meet the standards applicable to the structure or facility to be designed. For highly complex project plans, the State Geotechnical Engineer should be consulted for QV.

Boring Logs

For boring logs, the Field Exploration Inspector is responsible to make sure that the draft electronic field boring logs as entered are free of errors and consistent with the handwritten field logs (QC). To make sure that the inspector sees the final draft electronic field boring logs, the office staff in the Geotechnical Office will produce a PDF of each log sent in by the inspector and e-mail them back to the inspector for

review. The inspector will provide any comments to correct errors in the electronic logs back to the office staff, with a copy to the inspector's supervisor to ensure that the log review process has been followed and done correctly, for production of the final field logs and confirm that they have been reviewed. The geotechnical project manager is responsible to perform a QA check of the final draft edited boring logs produced by the technical staff.

Laboratory Testing

Once the drilling is completed, the GPM is responsible to develop the laboratory testing plan (see Section 2.4). Once the geotechnical project manager who is assigned the project has received the draft field logs, has selected soil and rock samples for testing, and if rock core is obtained, has reviewed the rock cores, and quality assurance of the laboratory testing plan has been conducted, the laboratory evaluation begins. Laboratory testing of soil and rock shall meet the quality control requirements in Section 5.6.1, and as applicable the AASHTO accreditation program requirements. Once the laboratory technicians have completed the specified testing and documentation and have checked their own work for errors, the supervisor in charge of the laboratory shall check the test results and reports for errors and incorrect interpretations and document that the data has been reviewed – once determined to be free of errors and omissions, the laboratory data are provided to the geotechnical project manager for use in the project, and also provided to the staff responsible to produce final draft edited boring logs based on the laboratory test results. The geotechnical project manager is responsible to check the laboratory test results for accuracy.

Geotechnical Reports and Memorandums

For geotechnical reports produced by the Geotechnical Office, senior-level review is required at the following key project junctures:

- The letter/memo transmitting the estimate of the scope of work and estimated costs for the geotechnical services needed,
- The subsurface investigation plan,
- The laboratory testing plan, and
- The draft/final geotechnical report.

Typically, three levels of review are conducted at each of these project junctures:

- a detailed review by the immediate supervisor (who is licensed) and at other intermediate times as needed to guide the design (including a detailed review of the draft report and supporting calculations, and a spot check of the boring logs and laboratory test data),
- A detailed review by the Chief Foundation Engineer or Chief Engineering Geologist of the final geotechnical product (e.g., geotechnical report, design memorandum, or Summary of Geotechnical Conditions) and a spot check of the calculations and other supporting information, and
- A spot check review and review for consistency with design policy and standards of practice by the State Geotechnical Engineer.

The State Geotechnical Engineer may delegate final review authority to the chief or senior level. For the subsurface investigation and laboratory testing plans, formal review by the State Geotechnical Engineer is generally not required. A minimum of one level of review by a licensed professional with the necessary geotechnical or engineering geology experience must be conducted in all cases, however. Licensed professionals performing design shall seek peer review and shall obtain the State Geotechnical Engineer's approval, or the review and approval of the individual to whom final review authority has been delegated by the State Geotechnical Engineer, prior to issuing design recommendations. "Design recommendations" include those that are considered final, and those that are considered preliminary if the preliminary recommendations will result in significant design effort being expended by those who use the recommendations to perform their designs, or if they could otherwise end up being treated as final recommendations. For those design recommendations that are clearly identified as being preliminary and subject to change, and for which all parties receiving those recommendations fully understand that the recommendations are subject to change and are only to be used for preliminary alternative and scope development purposes (with the exception of EIS discipline reports, critical area ordinance reports, or similar documents), final review authority is delegated to the Chief Foundation Engineer and Chief Engineering Geologist level.

Some projects require significant input by both engineering geologists and foundation engineers (e.g., landslides contained within a bigger interchange or line project, bridges or walls founded on soils or rock in which the site geology is very complex, retaining walls used to stabilize landslides, drainage or infiltration designs where the groundwater regime is complex, etc.). In such cases, a foundation engineer/engineering geologist team (i.e., one individual from each Section of the Geotechnical Office) should perform the design, and as a minimum, senior-level review by the Chief Foundation Engineer and the Chief Engineering Geologist, in addition to a spot check review and review for consistency with design policy and standards of practice by the State Geotechnical Engineer, shall be conducted at each of the key project junctures identified above.

1.4.3 Report Certification

In general, the individual who did the design, if he/she possesses a PE or LEG, and the first line reviewer who is licensed, will stamp the report, as required by the applicable RCW's and WAC's. If the second line supervisor/manager, or above (e.g., the State Geotechnical Engineer, Chief Foundation Engineer, or Chief Engineering Geologist), through the review process, requires that changes be made in the design and/or recommendations provided in the report, otherwise provides significant input into the design, or is the primary reviewer of the report, consistent with the definition of direct supervision in WAC 196-23 and WAC 308-15-070, the second line supervisor/manager, or above, will also stamp the report/memorandum. For reports produced by the Engineering Geology Section that require a Professional Engineer's stamp, and which have been produced and reviewed by individuals that do not possess a Professional Engineer's license, the State Geotechnical Engineer, or the licensed professional engineer delegated to act on behalf of the State Geotechnical Engineer, will provide a detailed review of the design and report, consistent with the definition of direct supervision in WAC 196-23, and stamp the report. For plan sheets in

construction contracts, the first line manager/supervisor, or above, who has functioned as the primary reviewer of the geotechnical work as defined above will stamp the plans, but only if the plan sheets fully and accurately reflect the recommendations provided in the geotechnical report upon which the plan sheets are based.

1.4.4 Approval of Reports Produced by the Geotechnical Office

The State Geotechnical Engineer, or the individual delegated to act on behalf of the State Geotechnical Engineer, must sign the geotechnical report or memorandum, as the designated approval authority for WSDOT regarding geotechnical design (this includes engineering geology reports). The signature of the approval authority indicates that the report or memorandum is in compliance with WSDOT geotechnical standards and policies. This policy also applies to design recommendations that are sent out informally to other offices (e.g., the WSDOT Bridge and Structures Office, Washington State Ferries Offices, Region Project Engineer Offices, etc.) for their use in design and PS&E development prior to issuance of the final geotechnical report for the project or project element.

1.5 Reports Produced by Consultants or other Agencies for WSDOT

The Geotechnical Office reviews and accepts all geotechnical reports and design letters/memorandums produced for WSDOT projects, consistent with the division of geotechnical work as described in Section 1.2.2. However, the consultant/other agency producing the report shall take full responsibility for the accuracy of the report and its engineering recommendations.

The Geotechnical Project Manager assigned the project being designed by a consultant is responsible to develop the scope of work for the consultant task assignment, or for consultants hired through the region project office, to work with the region to develop the scope of work. The geotechnical project manager is then responsible to:

- work with the consultant to make sure that the geotechnical work is carried out in accordance with the scope of work,
- work with the consultant (and region project office as needed) to address any changes in scope of work that occur during the life of the project,
- to verify that the work is carried out in accordance with department geotechnical policies, and
- to provide an overall quality verification (QV) evaluation of the adequacy of the geotechnical work with regard to WSDOT's geotechnical policies.

As a minimum, the geotechnical project manager should review the consultant's work and recommendations regarding the subsurface investigation plan, and for the draft/final geotechnical report. If there are questions about the adequacy/accuracy of the design, the geotechnical project manager should also request and spot check the consultant's geotechnical calculations. However, the geotechnical consultant is responsible for QC/QA for their design and report. The consultant liaison for the Geotechnical Office is only responsible to assist the geotechnical project manager with setting up the consultant task assignment and other consultant administration tasks during the life of the task assignment. See Section 1.6 for a more complete description of geotechnical consultant administration.

For reports or design letters/memorandums that cover only the level of geotechnical work that is clearly region responsibility per Section 1.2.2, the RME reviews and accepts the report or design letter/memorandum, but still forwards a copy of the consultant report to the Geotechnical Office for concurrence, consistent with Section 1.2.2 for regional soils reports. Acceptance of the report or design letter/memorandum produced by consultants or other agencies shall not be considered to constitute acceptance of professional responsibility on the part of WSDOT, as well as the reviewer, for the contents and recommendations contained therein, consistent with professional responsibility as prescribed by law. Acceptance only indicates that the contractual obligations under which the report or design letter/memorandum have been met and that the contents and recommendations appear to meet the applicable WSDOT, regional, and national standards of practice.

Geotechnical reports produced by consultants shall be certified in accordance with the principles described above in Section 1.4.1 and 1.4.3, and as required by the applicable RCW's and WAC's. Note that this review and acceptance process and associated considerations also apply to reports produced by consultants for developers building facilities that impact WSDOT facilities.

For geotechnical reports and documents produced by Design-Builders, see Chapter 22.

1.6 Geotechnical Consultant Administration

This section addresses geotechnical consultants working directly for the Geotechnical Office, and geotechnical consultants working for a prime consultant through a region, or other WSDOT office, contract. Geotechnical consultants are used to handle peak load work, or to obtain specialized expertise not contained within the Geotechnical Office. If a geotechnical consultant is needed, the first choice is to utilize a consultant working directly for the Geotechnical Office, as the communication lines are more straightforward than would be the case if the geotechnical consultant is working for a prime consultant, who in turn is working for another office in WSDOT. This is illustrated in Figures 1-3 and 1-4.

In general, consultants working directly for the Geotechnical Office will do so through an on-call master agreement in which the consultant is assigned project specific tasks. Through these tasks, the consultant is typically responsible to develop the detailed geotechnical investigation plan, perform the testing and design, and produce a geotechnical report. For these assignments, the consultant is viewed as an extension of the Geotechnical Office staff and is therefore subject to the same standards of design and review as in-house Office staff. The review and certification process for consultant geotechnical work mirrors that for in-house geotechnical work, as described in Section 1.5, except that the final certification of the report is done by the consultant rather than WSDOT staff, with WSDOT functioning in a review capacity. Frequent communication between the Geotechnical Office staff and the consultant is essential to a successful project. For this contractual scenario, the Geotechnical Office is responsible to oversee and administer the consultant agreement and task assignments.

If it is determined by the Region or other WSDOT office that a general civil or structural consultant is needed to handle the design work normally handled by that WSDOT office, the Geotechnical Office and Region Materials Office shall be contacted prior to sub-consulting the geotechnical portion of the project. Both

the Region Materials Office and Geotechnical Office may have staff available to perform the geotechnical design for the project. If it is determined that a geotechnical subconsultant is needed, the Geotechnical Office will need to assist in the development of the geotechnical scope and estimate for the project, so that the consultant contract is appropriate. A typical consultant scope of work for preliminary design is provided in Appendix 1-A, and a typical consultant scope of work to complete the geotechnical work for a PS&E level design is provided in Appendix 1-B. These typical scopes of work for geotechnical subconsultants may need adjustment or augmentation to adapt them to the specific project. A team meeting between the consultant team, the Region or other WSDOT Office (depending on whose project it is), and the Geotechnical Office is conducted early in the project to develop technical communication lines and relationships. Good proactive communication between all members of the project team is crucial to the success of the project due to the complex consultant-client relationships (see Figure 1-4).

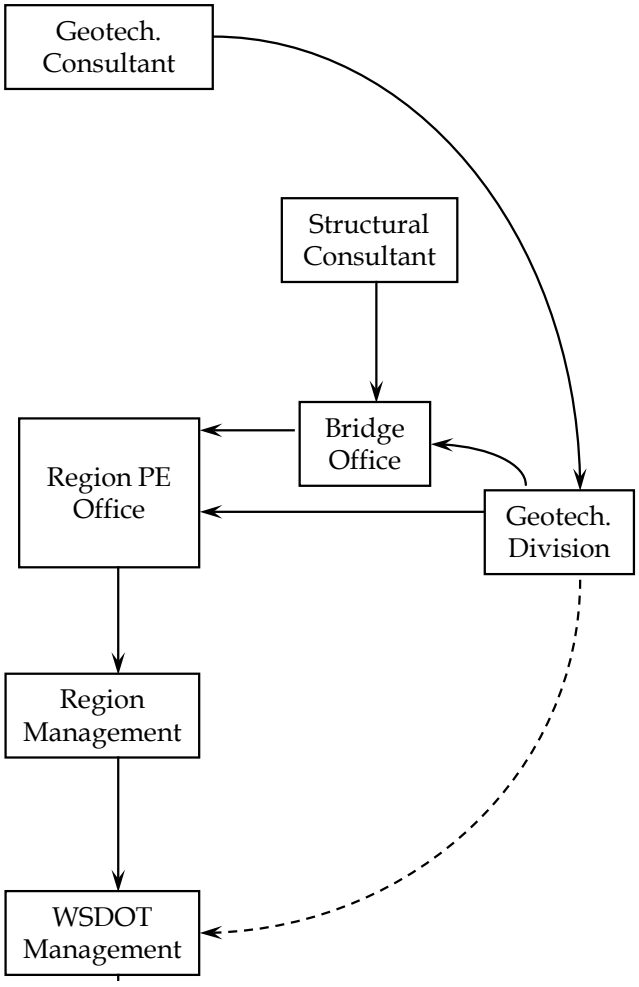

WSDOT Consultant Relationship for Consultants Working Directly for the Geotechnical Office
Figure 1-3

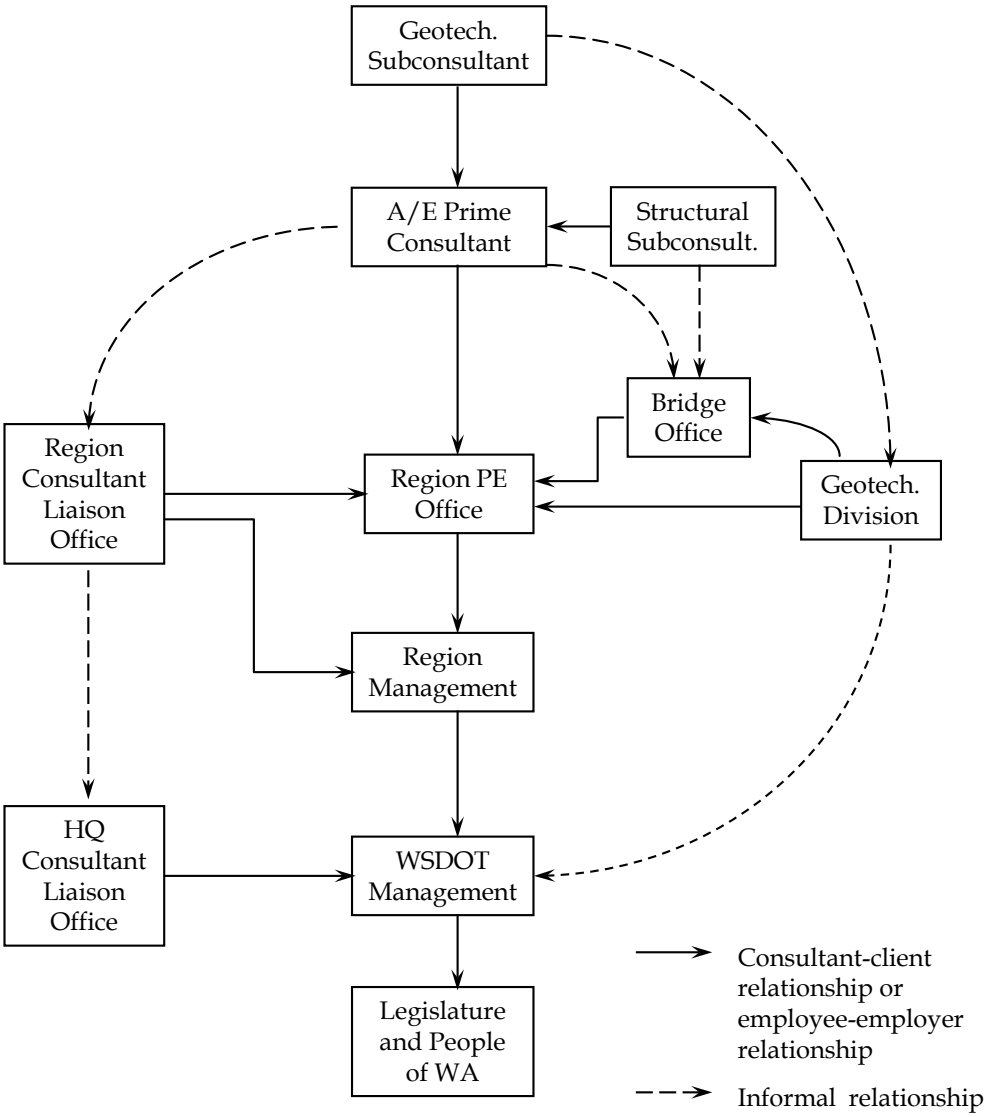

WSDOT-Consultant Relationship for Consultants Working for a Prime Consultant for Other WSDOT Offices
Figure 1-4

1.7 Geotechnical Information Provided to Bidders

1.7.1 Final Geotechnical Project Documentation

The Final Geotechnical Project Documentation for a project shall consist of all geotechnical reports and memorandums, in their entirety, produced by WSDOT or consultants that are pertinent to the final PS&E for the project. Outdated or otherwise superseded geotechnical reports and memorandums should not be included in the Final Geotechnical Project Documentation. In such cases where a small portion of a geotechnical report has been superseded, the entire report should be included with the superseded text clearly identified along with the superseding document. Reports produced by the RME are generally kept under separate cover, but are included in the final publication package as described below.

1.7.2 Final Geotechnical Documentation Publication

Once a project PS&E is near completion, the Final Geotechnical Project Documentation is to be published for the use of prospective bidders. Materials Source Reports should also be included as part of the package published for bidders. The Region Project Development Office (or Terminal Engineering Department for Washington State Ferries) is responsible to notify the Geotechnical Office at least 12 to 14 weeks in advance of the Ad or Shelf Date when the final project geotechnical documentation is due in the Region (or Washington State Ferries), and which projects require final project geotechnical documentation. The Region Project Development Office (or Terminal Engineering Department for the Washington State Ferries) will also identify at that time who they have designated to receive the report to handle or continue the publication process. In general, it is desirable that the final geotechnical documentation be available for printing 10 weeks prior to the Ad or Shelf Date, but absolutely must be available no later than two Fridays prior to the Ad or Shelf date. This compiled geotechnical documentation package is typically sent to the Region Project Engineer Office (or Terminal Engineering Office for Washington State Ferries projects) by the Geotechnical Office. When transmitting the final project geotechnical documentation, the Geotechnical Office will specifically identify the geotechnical documentation as final for the project and as camera-ready. Likewise, the Region Materials Office will concurrently send a camera-ready final copy of any Region-generated reports (e.g., the Region Soils Report), as applicable, to the Region Project Engineer Office to be included as part of the geotechnical documentation for the project.

1.7.3 Geotechnical Information to be Included as Part of the Contract

Geotechnical information included as part of the contract (as an appendix) for design-bid-build projects will generally consist of the final project boring logs, and, as appropriate for the project, a Summary of Geotechnical Conditions. Both of these items are, in general, provided by the Geotechnical Office. If a Region Soils Report has been produced by the RME, the RME must provide the final boring logs and may be required to complete portions of the Summary of Geotechnical Conditions to include the information provided in the Region Soils Report. Note that Chapter 22 covers what geotechnical information is to be included in the Request for Proposals for design-build projects.

All boring logs used as the basis for the geotechnical design for the project should be included in an appendix to the contract. A legend sheet that defines the terms and symbols used in the boring logs shall always be included with the boring logs. The Geotechnical Office will provide a legend for logs they have produced. Consultants shall also provide a legend along with their logs in their geotechnical reports. The locations of all boring logs included with the contract should be shown on the contract plan sheets.

Based on specific project needs, other types of geotechnical data may also need to be included in the contract documents. Such additional data may include geophysical test results, and subsurface profiles and cross-sections for specific geotechnical project features. The goal of such data is to provide potential bidders a more complete picture of the conditions as necessary for accurate bidding, when that information cannot be conveyed by the boring logs alone.

A "Summary of Geotechnical Conditions," provided by the Geotechnical Office for most projects that contain significant geotechnical features, should also be included in the contract with the boring logs. This Summary of Geotechnical Conditions" is generally a 1 to 2 page document (see Chapter 23) that briefly summarizes the subsurface and ground water conditions for key areas of the project where foundations, cuts, fills, etc., are to be constructed. This document also describes the impact of these subsurface conditions on the construction of these foundations, cuts, fills, etc., to provide a common basis for interpretation of the conditions and bidding.

1.8 Sample Retention and Chain of Custody

In general, there are three types of samples obtained by the Geotechnical Office and geotechnical consultants: disturbed soil samples (includes sack samples from test pits), undisturbed soil samples, and rock cores. Disturbed soil samples are typically used for soil classification purposes, though on occasion they may be used for more sophisticated testing. Undisturbed soil samples are primarily used for more sophisticated testing, though they may also be used for evaluation of detailed soil structure. Undisturbed samples typically degrade significantly and are not useful for testing purposes after about 3 to 6 months. Disturbed and undisturbed soil samples that have not been tested by the Geotechnical Office or Consultant will be retained for a minimum of 90 days after the geotechnical report is completed, after which time they will be disposed. Prior to disposal, the Consultant shall contact the Geotechnical Office so that they may take possession of the samples, if they choose to do so.

Rock core is generally retained until after the construction project is complete and it is clear that claims related to the rock are not forthcoming. After construction, the core will be disposed. Rock core obtained by consultants shall be delivered to the Geotechnical Office as part of the deliverables associated with the Geotechnical Report. Subject to prior approval of the WSDOT State Geotechnical Engineer, rock core may be disposed prior to project construction if it is determined that the risk of claims related to rock quality issues is sufficiently low, if the rock core is degraded and therefore not useful for visual inspection or testing, or possibly other reasons that cause the risk of early core disposal to be low. In all cases, whether or not early disposal of the core is conducted, all rock core shall be photographed at high resolution and in color correct light, to provide a permanent record of the core.

All samples of soil or rock that are obtained on behalf of WSDOT by consultants and transported to the State Materials Laboratory Geotechnical Office shall become the property of WSDOT.

1.9 Geotechnical Design Policies and their Basis

Technical policies and design requirements provided in this manual have been derived from national standards such as those produced by AASHTO. FHWA and other nationally recognized geotechnical design manuals and publications have been used in the *Geotechnical Design Manual* to address areas not specifically covered by the AASHTO manuals. The following manuals, listed in hierarchical order, shall be the primary source of geotechnical design policy for WSDOT:

1. This *Geotechnical Design Manual* (GDM)

2. AASHTO Guide Specifications for LRFD Seismic Bridge Design
3. AASHTO LRFD Bridge Design Specifications, most current edition plus interims
4. AASHTO Standard Practice for Conducting Geotechnical Subsurface Investigations, R 13-03, 2007
5. AASHTO Manual on Subsurface Investigations (1988)

If a publication date is shown, that version shall be used to supplement the geotechnical design policies provided in this GDM. If no date is shown, the most current version, including interim publications of the referenced manuals, as of the GDM publication date shall be used. This is not a comprehensive list; other publications are referenced in this GDM and shall be used where so directed herein. FHWA geotechnical design manuals, or other nationally recognized design manuals, are considered secondary relative this GDM and to the AASHTO manuals listed above for establishing WSDOT geotechnical design policy.

Where justified by research or local experience, the design policies and requirements provided in the GDM deviate from the AASHTO and FHWA design specifications and guidelines, and shall supersede the requirements and guidelines within the AASHTO and FHWA manuals.

For foundation and wall design, the load and resistance factor design (LRFD) approach shall be used, to be consistent with WSDOT Bridge Office structural design policy. For aspects of foundation and wall design that have not yet been developed in the LRFD format, allowable stress (ASD) or load factor design (LFD) will be used until such time the LRFD approach has been developed. Therefore, for those aspects of foundation and wall design for which the LRFD approach is available, alternative ASD or LFD design formats are not presented in this manual.

In the chapters that follow, as well as within this chapter, and in the referenced AASHTO Manuals, the terms, and their definitions, provided in Table 1-2 are used to convey geotechnical policy.

Term	Definition
Shall	The associated provisions must be used. There is no acceptable alternative.
Should	The associated provisions must be used unless strong justification is available and based on well-established regional or national practice, and if supported by widely accepted research results.
May	The associated provisions are recommended, but alternative methods or approaches that are consistent with the intent of the provisions are acceptable.
Evaluate, evaluated, address, or addressed	The associated issue must be evaluated or addressed through detailed analysis and the results documented.
Consider, considered	The associated recommended provisions must be evaluated, and the reasons and analyses used to decide whether or not to implement the recommended provisions must be documented.
Geotechnical designer	The geotechnical engineer or engineering geologist who has been given responsibility to coordinate and complete the geotechnical design activities for the project

Terms Used to Convey Geotechnical Policy
Table 1-2

With regard to "should" in Table 1-2, "strong justification" relates to the veracity and consistency of the information used to justify the alternative approach or procedures, and how the data are to be interpreted or the analysis methodology is to be used based on widely accepted design codes, regional practices, manuals, published research results, etc. In order to meet the requirement for "well established regional or national practice", the practice must be demonstrably relevant to the specific project conditions and applications in question. To meet the requirement for "well-established", the practice must be defined in regionally or nationally accepted design manuals, text books, or codes of practice. Examples that meet these requirements are as follows:

1. FHWA engineering manuals.
2. AASHTO LRFD Bridge Design Specifications.
3. Widely accepted text books.
4. Practices that have been widely and successfully used by the geotechnical design firms in the region, provided they are applicable to the project conditions and applications in question, and provided that each of the following are convincingly demonstrated: details of the practice, long-term success, soil/rock conditions, and applicability.

In order to meet the requirement for "widely accepted research" the research must be published in a peer-reviewed national or international engineering journal, such as the ASCE Journal of Geotechnical and Geoenvironmental Engineering; the Canadian Geotechnical Journal; or Ground Improvement. Furthermore, the research must be demonstrably relevant to the project-specific conditions and applications in question. What would not be considered widely accepted research includes, for example, conference articles (while sometimes peer reviewed, such peer reviews are usually not thorough or rigorous); PhD theses; trade magazine articles; and any article, even if peer reviewed, that directly conflicts with the design requirements of this Geotechnical Design Manual and other documents referenced by this manual.

Justification to deviate from the policies and design requirements outlined in this manual shall not rely solely on "engineering judgment". Furthermore, strong justification must consider all the available data that applies to the site and design, not just portions of it.

1.10 Geotechnical Construction Support Policies

1.10.1 Division of Responsibilities for Construction Support of Design-Bid-Build Projects

The division of responsibilities between the Geotechnical Office and the Region Materials Office for response to geotechnical construction problems for design-bid-build projects is generally consistent with Section 1.2, which means that the RME, at least theoretically, functions as the clearing house to address geotechnical construction problems. The division of work shown in Figure 1-2 applies to construction assistance as well. However, it must also be recognized that most geotechnical construction problems need to be addressed quickly to prevent construction contract impacts. To minimize delays in getting geotechnical construction problems addressed, if it is obvious that HQ input will be required anyway (e.g., foundation construction issues,

retaining wall geotechnical construction problems, shoring wall stability or excessive deformation problems, rockslope construction issues, etc.) the Region Project Office should contact the Geotechnical Office directly. In that case, the Geotechnical Office should keep the RME informed as to the request and the nature of the problem as soon as practical. Typically, a construction project geotechnical advisor will be assigned to the project and is the first point of contact for assistance from the Geotechnical Office. For construction emergencies, such as slope failures, the process described in Section 1.2.3 should be followed, except that the Region Project Office functions as the maintenance office in that process.

There are some types of geotechnical construction issues for which the RME should always provide the first response. These include, for example:

- Evaluation of fill compaction problems;
- Evaluation of material source and borrow problems;
- Pavement subgrade problems; and
- Evaluation of the soil at the base of spread footing excavations to check for consistency with boring logs.

For the specific issues identified above, the RME will enlist the help of the Geotechnical Office if complications arise.

For evaluation of differing site conditions claims, the Geotechnical Office should always provide the geotechnical evaluation and will work directly with the HQ Construction Office to provide the geotechnical support they need.

Note that for consultant designed projects, the Geotechnical Office may request that the designer of record (i.e., the consultant) get involved to recommend a solution to WSDOT regarding the problem.

1.10.2 Division of Responsibilities for Construction Support of Design-Build Projects

For design-build projects, the first responder for geotechnical construction problems is the geotechnical designer of record for the design-builder. The next point of contact, if action on behalf of the contracting agency (i.e., WSDOT) is required in accordance with the contract RFP, is the geotechnical advisor assigned to the project from the Geotechnical Office. If it turns out that the RME should provide a response or if the RME could provide a more rapid response, considering the nature of the problem, the geotechnical advisor will contact the RME to enlist their assistance.

1.10.3 Geotechnical Office Roles and Communication Protocols for Construction Support

Geotechnical Office support to HQ Construction, Region Construction, and Region Project offices must always be technical in nature, leaving construction administration issues to the construction offices the Geotechnical Office is supporting. Since the technical support the Geotechnical Office provides could affect the construction contract, it is extremely important to contact HQ Construction as soon as possible to let them know of the situation, in addition to the specific regional offices being supported. Direct communication and directions to the contractor should be avoided, unless the boundaries of such communication have been approved in advance by the Region Project Office and as appropriate, HQ Construction. Any communication

in writing, including e-mail correspondence, must be written in a way that communicates only technical issues and does not compromise WSDOT's ability to effectively administer the contract. This is especially important if potential contractor claims are involved.

If potential contractor claims are involved in the construction problem, the Geotechnical Office role is to provide assistance to the HQ Construction Office. For example, with changed conditions claims, the Geotechnical Office's professional evaluation of the situation should focus on determining and describing the geotechnical conditions observed during construction in comparison to what was expected based on the data available at time of bidding. The Geotechnical Office is not to determine or even imply the merits of the contractor's claim. HQ Construction will do that.

Evaluations of contractor claims, as well as geotechnical recommendations for the redesign of a geotechnical element in a contract, must be put in a formal written format suitable for sealing as discussed in Section 1.4.1. E-mail should not be used as a communication vehicle for this type of information. Furthermore, the State Geotechnical Engineer, or the individual delegated to act on behalf of the State Geotechnical Engineer, must review and approve such documents before they are distributed. Memorandums that provide an evaluation of a contractor claim should be addressed to the HQ Construction Office, and a copy shall not be sent to the Region Project Engineer in this case. The HQ Construction Office will forward the Geotechnical Office response to the Region Project Engineer with their final determination of the validity of the claim. If a claim evaluation is not involved and only technical recommendations in support of a contract redesign are being provided, address the letter to the HQ Construction Office, with a copy to the Region Project Office and others as necessary (e.g., the Bridge Office). If the resulting change order will be within the Region authority to approve, the memorandum should be addressed to the Region Project Office with a copy to HQ Construction and the Region Operations or Construction Office.

1.11 Geotechnical Construction Submittal Review Policies

Most construction contract submittals include information that both the Bridge and Structures Office and the Geotechnical Office must review. Blasting plan and rock slope submittals (e.g., rock bolting) are an exception to this, in that their technical review are purely a Geotechnical Office function.

For construction submittals that involve structures or support of structures or bridge approach fills, policies on coordination of submittal review are as follows:

1.11.1 Proprietary Retaining Walls

- All pre-approved wall manufacturer submittals required by the contract shall be reviewed by the Bridge Office. The Bridge Office shall send a copy of the submittal to the Geotechnical Office for review when the submittal is distributed to the appropriate Bridge Office Design Unit. Details of specifically what will be reviewed are provided in Appendix 15B.
- The Geotechnical Office shall respond directly to the Construction Support Unit of the Bridge Office with their submittal review comments. The Bridge Office Construction Support Unit is responsible for the response back to the Region Project Engineer, and shall attach or include Geotechnical Office comments verbatim.
- After both the Bridge Office Design Unit and the Geotechnical Office have submitted their comments back to the Bridge Office Construction Support Unit, they will be circulated to the Bridge Office Wall Specialist for this review for completeness and consistency.
- Returns for Corrections (RFC's) and Change Order Notifications will require that a copy of the submittal go to the HQ Construction Office.
- Proprietary retaining walls that have been completely detailed in the Contract Plans and Special Provisions (including manufacturer shop plans) need not come to the Bridge Office for review. The Region's Project Engineer's Office is responsible for the review of the contractor's walls in accordance with the contract documents.

1.11.2 Other Construction Submittals (Non-Proprietary walls, Excavation and Shoring, Soldier Piles, Ground Anchors, Shafts, Piles, Ground Improvement, etc.)

- Geosynthetic shoring walls without structural facing do not require Bridge Office review. These walls shall be sent directly to the Geotechnical Office for their review. To provide consistency in the review process, the review comments should be sent back to the Bridge Office Construction Support Unit in the same manner as any other submittal for forwarding to the region project engineer.
- The Bridge Office Construction Support Unit will determine the need for geotechnical input when reviewing contractor shoring submittals. If geotechnical input is needed, the Construction Support Unit will coordinate with the Geotechnical Office to obtain review comments and will submit the compiled comments from both offices to the region project office.
- For all other construction submittals with geotechnical items received by the Bridge Office, the Bridge Office Construction Support Unit will send a copy of the submittal to the Geotechnical Office for review. The Geotechnical Office shall respond directly to the Construction Support Unit of the Bridge Office with their submittal review comments. The Bridge Office Construction Support Unit is responsible for the response back to the region project engineer, and shall attach or include Geotechnical Office comments verbatim. Returns for Corrections (RFC's) and Change Order Notifications will require that a copy of the submittal go to the HQ Construction Office.

- The geotechnical designer's main emphasis in review of the shaft submittals is to ensure that the proposed construction procedure will result in a shaft that meets the assumptions used during the design phase. Casing limits, construction joints, shaft diameter(s), and surface casing installation, as well as, backfilling are areas that typically need review. For soldier piles, substitution of another pile section or possible over-stressing of the pile anchor stressing should be checked. These items will generally be flagged by the geotechnical designer.
- The Bridge Office shall in general be the clearinghouse for transmittals of submittal reviews back to the region project engineer. The Geotechnical Office will return comments to the Bridge Office only, except when previously agreed to respond separately.

1-12 References

AASHTO, 2012, LRFD Bridge Design Specifications, American Association of State Highway and Transportation Officials, Sixth Edition, Washington, D.C., USA. (Note: Most current edition shall be used)

AASHTO, 2011, AASHTO Guide Specifications for LRFD Seismic Bridge Design, Second Edition, LRFDSEIS-2, Washington DC, USA. (Note: Most current edition shall be used)

AASHTO, 2007, Standard Practice for Conducting Geotechnical Subsurface Investigations, R 13-03, Washington DC, USA.

AASHTO, 1988, Manual on Subsurface Investigations, First Edition, MSI-1, Washington, DC, USA.

Design Manual M 22-01, 2012, (Note: Most current edition shall be used)

WAC 196-27A Rules of Professional Conduct and Practice

WAC 196-23 Stamping and Seals

WAC 308-15 Geologist Licensing Services

Appendix 1-A Preliminary Geotechnical Engineering Services Scope of Work

The CONSULTANT shall provide all PRELIMINARY geotechnical services that would normally be provided by the STATE's geotechnical engineering personnel to the project office responsible for the design and preparation of plans, specifications, and estimates (PS&E) for this PROJECT. The preliminary recommendations are to identify critical design elements and provide a basis for developing a scope of work for preparing design-level (PS&E) geotechnical recommendations. Based on the information obtained and the preliminary recommendations, the Geotechnical Scope may be supplemented by the STATE to have the CONSULTANT provide detailed design recommendations for PS&E.

The CONSULTANT shall cooperate and coordinate with the STATE's Geotechnical Office, other STATE personnel, and Municipal Agencies as necessary and under the direction of the STATE Geotechnical Engineer to facilitate the completion of the PROJECT. The CONSULTANT shall:

Review Available Information
The CONSULTANT shall collect and review readily available geotechnical and geologic data for the project including, but not limited to, geologic maps from the U.S. Geologic Survey, WSDOT construction records, soils and geotechnical reports from WSDOT, Federal, Community, City or County officials, groups or individuals, and geotechnical information within the project limits that may be in the CONSULTANT's files.

For projects where the geotechnical elements of the project have not been fully defined by the STATE, the CONSULTANT shall review the project and available information to identify areas within the project limits that may require detailed geotechnical recommendations or areas that have geotechnical elements that are complex. The CONSULTANT shall identify areas of significant cuts in soil or rock, large fills, areas of soft compressible soils, potential retaining wall locations and suitable wall types.

Perform a Site Review
The CONSULTANT shall perform an on-site geologic reconnaissance of the project to identify critical design elements. The CONSULTANT shall determine general site conditions, access for exploration, conditions of existing transportation features, and identify areas of potential fills or cuts, walls, culverts or culvert extensions, and bridges or bridge widen-ings.

Summarize Project Geology
The CONSULTANT shall summarize the regional geology and geology of the projects limits based on available existing information and the site reconnaissance. Geotechnical hazards, such as liquefaction and landslides, shall be assessed and the potential impacts to the project shall be discussed for identified hazards.

Prepare a report that Provides Preliminary Geotechnical Recommendations

The CONSULTANT shall identify critical design elements and provide a basis for geotechnical recommendations. As a minimum the CONSULTANT shall address or identify the following:

1. Locations of potential cuts, fills, soft compressible soils, soils susceptible to liquefaction, landslides, and faults close to or at the site.
2. Preliminary maximum cut and fill slope inclinations shall be recommended to ensure overall stability for cut slopes, embankments, structures, and to provide a basis for right-of-way acquisition.
3. For structures, suitable foundation types shall be identified. The report shall also indicate whether the foundation bearing capacities are anticipated to be low, indicating marginal bearing conditions, or high, indicating good to excellent bearing conditions.
4. Feasible retaining wall types shall be discussed.
5. The report shall include available site maps, cross sections, end areas, and subsurface profiles, and the available subsurface information.

The CONSULTANT shall prepare a Draft Preliminary Geotechnical Recommendations Report for the project. The CONSULTANT shall prepare three copies of the Draft Geotechnical Report and submit them to the STATE for review and comment. The STATE will review the Geotechnical Report and provide written comments within three weeks. The CONSULTANT shall respond to comments from the project team and WSDOT, revise the draft report, and submit three (3) copies of the final report. Additional Draft reports may be requested by the STATE prior to completing the FINAL report until the STATE's review comments are adequately addressed.

Instructions for Preparation of the Scope of Work for Project Specific Application
The **Preliminary Geotechnical Engineering Services Scope of Work** is to be used when the civil engineering portion of the project is not defined before consultant services are requested. In general, new soil borings are not required for conceptual-level recommendations except where subsurface information is not available within the project limits and if project elements are geotechnically complex. The Geotechnical Office is available to assist in the determination of whether or not borings are required. If the Region and the Geotechnical Office determine that borings are required to adequately develop preliminary recommendations, the Geotechnical Office will provide an additional section to be included in the scope of work for the drilling of new borings.

The Geotechnical Office should be contacted to provide a cost estimate for the work anticipated. The Geotechnical Office estimate should be used to complete negotiations with the consultant. At the Region's request, the Geotechnical Office can review the consultant's estimate and provided guidance for negotiation.

Once preliminary geotechnical recommendations are provided, the prime Consultant or Region can define the civil engineering portion of the project. Once the civil engineering portion is defined, a supplement can be prepared to have the Geotechnical Consultant provide detailed PS&E level recommendations. The **Geotechnical Engineering Services Scope of Work** should be used for the supplement.

The CONSULTANT shall provide all geotechnical services that would normally be provided by the STATE's geotechnical engineering personnel to the project office responsible for the design and preparation of plans, specifications, and estimates (PS&E) for this PROJECT. The STATE will provide support services to the CONSULTANT, as described in the text below. The CONSULTANT shall cooperate and coordinate with the STATE's Geotechnical Office, other STATE personnel, and Municipal Agencies as necessary and in accordance with the policy of the STATE Geotechnical Engineer to facilitate the completion of the PROJECT.

State Furnished Services, Information and Items

Throughout the duration of the project the STATE will perform services and furnish information and items as necessary to provide ongoing support for the CONSULTANT and the PS&E preparation process.

The following services will be performed by the STATE:

1. The STATE will handle public information.
2. The STATE will accomplish field survey work as required to complete the project, unless the STATE resources are not available. The CONSULTANT may request any necessary survey work, giving a minimum of 14-calendar-days notice prior to need. The CONSULTANT shall furnish information for the locations and the type of work required.

The following information and items shall be made available by the STATE to the CONSULTANT:

1. The STATE will provide or make available information from its files and answer questions.
2. Existing utility plan sheets.
3. Right of way and access plans.
4. Agreements between the STATE and utilities or any other agency where the agreements affect the project.

Geotechnical Consultant Engineering Services

The CONSULTANT shall provide to the STATE all geotechnical engineering services required by the STATE in order to design and prepare PS&E. The following is an outline of anticipated areas of significant CONSULTANT work:

Project Review and Scoping

The CONSULTANT shall collect and review readily available geotechnical and geologic data for the project including, but not limited to; Geologic maps from the U.S. Geologic Survey, WSDOT construction records, soils and geotechnical reports from WSDOT, Federal, Community, City or County officials, groups or individuals, and geotechnical information within the project limits that may be in the CONSULTANT's files.

Site Review

The CONSULTANT shall perform an on-site geologic reconnaissance of the project. The CONSULTANT shall determine general site conditions, access for exploration, and condition of existing transportation features.

Project Geology

The CONSULTANT shall summarize the regional geology and geology of the project limits. The CONSULTANT shall review the site seismicity and provide recommendations for suitable response spectra and the design acceleration. Geotechnical hazards shall be assessed and the potential impacts to the project shall be discussed. Recommendations for mitigating the hazards shall be provided at the STATE's request. Liquefaction potential shall be assessed and liquefaction mitigation methods shall be provided at the STATE's request.

Field Exploration

The CONSULTANT shall, in consultation and coordination with the STATE, plan and conduct a subsurface investigation program utilizing exploratory borings, test pits, geophysical methods, and insitu tests to provide information relative to soil, groundwater, and other geologic conditions along the project alignment. The CONSULTANT shall develop an exploration plan showing the locations of existing information, the locations for new explorations, the anticipated depths and sampling requirements for the borings, and field instrumentation requirements. Existing subsurface information shall be fully utilized and considered when preparing the field exploration plan. The CONSULTANT shall submit the plan to the region project engineer and the Geotechnical Office for review and approval. Upon approval, the CONSULTANT shall stake all boring locations in the field.

The STATE will provide all traffic control for the field exploration. The CONSULTANT shall obtain utility locates prior to field investigations requiring digging or boring and shall field locate the borings or test pits relative to station, offset, and elevation.

The _____ shall perform the field investigation, and the _____ shall secure Right of Entry for the field exploration.

If the STATE will perform all subsurface exploration drilling and taking of cores, the CONSULTANT shall provide a Drilling Inspector to obtain samples, and keep records. The STATE will commence drilling or coring operations as soon as practical after approval of the CONSULTANT's drilling plan.

All soil samples from drilling operations will become the property of the CONSULTANT. The CONSULTANT shall retain the samples for a period of 90 days after submittal of the final geotechnical report, at which time the samples may be disposed of unless the STATE requests that they be made available for pick-up at the CONSULTANT's office. All rock cores from drilling operations will become the property of the STATE and shall be delivered to the Geotechnical Office with, or prior to, the final geotechnical report. The CONSULTANT shall provide logs for the borings and test pits. The logs shall be edited based on laboratory or field tests in accordance with WSDOT Soil And Rock Classification Guidelines.

The results of the field exploration and all of the equipment used shall be summarized. Down hole hammers or wire-line operated hammers shall not be used for Standard Penetration Tests (SPT). Boring logs with station, offset, elevation, groundwater elevations, uncorrected SPT test results with blows per 6 inches shall be provided. Soil units encountered in the field exploration shall be described and their extent and limits shall be identified. Soils profiles shall be developed and shown for all structures or significant cut and fill slopes. Plan views shall be prepared that show the actual locations of the borings in relation to project elements.

Testing

The CONSULTANT shall conduct field and laboratory tests in general accordance with appropriate American Society for Testing Materials (ASTM) and WSDOT standards, including Standard Penetration Tests (SPT's), natural moisture content, grain size analysis, Atterberg limits, moisture/density (Proctor) relationships, resilient modulus for use in pavement design, pH, and resistivity and specialized geotechnical tests such as triaxial tests, direct shear tests, point load tests, and soil consolidation. All test results shall be included in the Geotechnical Report.

Instrumentation

The CONSULTANT shall provide the STATE with recommendations for field instrumentation to be installed in the exploratory borings of the project to monitor water levels and slope movements during both design and construction. If necessary, the CONSULTANT shall provide the STATE with recommendations for instrumentation for construction control of the project, e.g., monitoring slope movement, wall movement, pore pressure, settlement, and settlement rates. Included shall be the recommended instrument types, locations, installation requirements, zones of influence, and critical readings or levels. The CONSULTANT shall coordinate with the Geotechnical Office to ensure that recommended instruments are compatible with STATE readout/recording devices. During design, all instruments shall be installed and monitored by the CONSULTANT. The STATE shall monitor all instrumentation during construction or if long term monitoring is required.

Engineering Analysis

The CONSULTANT shall perform necessary geotechnical engineering analysis to identify critical design elements and provide a basis for geotechnical recommendations. Descriptions of the analysis and/or calculations shall be provided at the STATE's request. Comprehensive geotechnical engineering design recommendations shall be provided for preparation of project PS&E documents. The recommendations shall be detailed and complete for use by STATE engineering personnel or other CONSULTANTs in design of structures, cut slopes, fill slopes, embankments, drainage facilities, rock fall control, and landslide correction. As a minimum the CONSULTANT shall address the following:

1. Overall stability for cut slopes, embankments, and structures shall be assessed. For structures, minimum foundation widths, embedments, over-excavation, and ground improvement shall be addressed to satisfy overall stability requirements. Maximum cut and fill slope inclinations shall be recommended. Any mitigating measures needed to obtain the required level of safety for slopes shall be fully developed for the PS&E.

2. For structures, suitable foundation types shall be assessed and alternate foundation types recommended. For spread footings, allowable bearing capacity and settlement shall be provided. For seismic design of spread footings, ultimate bearing capacity and shear modulus values shall be provided for strain levels of 0.2% and 0.02%. For piles and shafts, ultimate capacity figures shall be developed that show the capacity in relation to tip elevation for both compression and tension. Settlement shall be assessed and group reduction factors shall be recommended. Downdrag and lateral squeeze shall be reviewed. Parameters for P-y curve development using L-Pile or COM624 shall be provided. Minimum tip elevations, casing requirements, and estimates of overdrive shall be provided. For piles with maximum driving resistances of 300 tons or more, wave equation analysis shall be performed to assess driveability, pile stress, and hammer requirements.
3. Suitable retaining wall types shall be recommended. For all walls (including standard, preapproved proprietary, and non-preapproved proprietary walls), bearing capacity, settlement, construction considerations, and external stability shall be addressed. For non-standard, non-proprietary walls, internal stability shall be addressed.
4. Earthwork recommendations shall be provided including subgrade preparation, material requirements, compaction criteria, and settlement estimates. In areas where compressible soils are encountered, overexcavation, staged construction, instrumentation, settlement, and creep characteristics and estimates shall be addressed as well as details of any mitigating measures needed to keep embankment performance within project constraints.
5. At stream crossings, evaluation of alternatives and recommendations shall be provided for extending the existing culvert, pipe jacking a new culvert, installing a bottomless culvert, or constructing of a bridge structure. Pipe bedding, subgrade preparation, bearing capacity, and settlement shall be addressed. For pipe jacking, jacking pit construction shall be assessed along with the potential for caving soils.
6. General drainage, groundwater, pH, and resistivity values as they apply to the project.
7. For signals, illumination, and sign structures, allowable lateral bearing capacity shall be evaluated. Where poor soils are present design recommendations for special design foundations shall be prepared. These shall address bearing capacity, lateral capacity, rotational capacity, settlement, and construction of the foundations.
8. Where possible, design recommendations shall be provided in tabular or graphical form.

Construction Considerations

Construction considerations shall be addressed. Temporary slopes and shoring limits shall be identified for estimating purposes. Advisory Special Provisions shall be prepared for elements that may encounter difficult ground conditions or that may require non-typical construction methods. Over-excavation recommendations and backfill requirements shall be discussed and details prepared for the PS&E. Construction staging requirements, where applicable, shall be addressed. Wet weather construction and temporary construction water control shall be discussed.

State Standards

Whenever possible, the CONSULTANT's recommendations shall provide for the use of WSDOT standard material, construction methods, and test procedures as given in the current *Standard Specifications for Road, Bridge, and Municipal Construction*. The CONSULTANT shall follow AASHTO Guide Specifications in design except where STATE design methods are applicable. State design methods are provided in the *Design Manual, Bridge Design Manual, Construction Manual, Hydraulics Manual*, and Standard Plans.

Report

The CONSULTANT shall prepare a Draft Geotechnical Report for the project summarizing the Geotechnical recommendations for the areas of significant CONSULTANT work as discussed under **Geotechnical Consultant Engineering Services** above.

Prior to Draft report submittal, the CONSULTANT shall meet with the Geotechnical Office to discuss the recommendations, assumptions, and design methodology used in preparation of the report. After the meeting, the CONSULTANT shall incorporate or address WSDOT's comments in the Draft Report. The CONSULTANT shall prepare three copies of the Draft Geotechnical Report and submit them to the STATE for review and comment. The STATE will review the Geotechnical Report and provide written comments within three weeks. The CONSULTANT shall respond to comments from the project team and WSDOT, revise the draft report, and submit ten (10) copies of the final geotechnical report. In addition, the CONSULTANT shall provide one unbound, camera ready copy of the report so that the report can be reproduced with the bid documents. Additional Draft reports may be requested by the STATE prior to completing the FINAL report until the STATE's review comments are adequately addressed.

Special Provisions and Plans

Where elements of geotechnical complexity are identified, the CONSULTANT in cooperation and coordination with the STATE shall develop or modify Special Provisions as appropriate to meet the project construction requirements. Wherever possible, the CONSULTANT shall utilize existing STATE specifications. All recommended Special Provisions shall be included in the geotechnical report as an appendix. All details necessary for design and construction of the project elements shall be included in the Geotechnical Report such as earth pressure diagrams, over-excavation details, wall details, and staged construction details. Details developed by the geotechnical engineer shall be provided in electronic form to the STATE or other CONSULTANTs for incorporation into the PS&E.

Instructions for Preparation of the Scope of Work for Project Specific Application
The **Geotechnical Engineering Services Scope of Work** is to be used when the civil engineering portion of the project is well defined before consultant services are requested. The following elements of the project should be well defined or guidelines should be available as to what is acceptable to WSDOT:

1. Right of way
2. Wetland boundaries and limits
3. Roadway alignments and roadway sections
4. Retaining wall locations, profiles, cross sections, and aesthetic requirements
5. Structure preliminary plans

There are fill-ins that need to be completed to designate who will perform the drilling and secure Right of Entry. Region Materials should be contacted to determine availability for drilling prior to completing the fill-in.

The Geotechnical Office should be contacted to provide a cost estimate for the work anticipated. The Geotechnical Office estimate should be used to complete negotiations with the consultant. At the Region's request, the Geotechnical Office can review the consultant's estimate and provided guidance for negotiation.

Chapter 2 Project Geotechnical Planning

2.1 Overview

This chapter addresses geotechnical planning for projects that involve significant grading or foundations for structures, from the project definition or conceptual phase through the project design phase to preparation for the PS&E development phase. Final design for the PS&E development will be covered in other chapters of this manual specific to each project element.

The design objectives of the different phases of a project and guidance on the general level of geotechnical investigation for each phase were discussed in Chapter 1. The *Design Manual* M 22-01 Chapter 510 and Chapter 1 provide guidance concerning the roles and responsibilities of the Region Materials Engineer and the Geotechnical Office, as well as information on initiating geotechnical work, scheduling and site data and permits needed for each stage of a project. Geotechnical design for WSDOT projects is generally provided by the Region Materials Engineer and the Geotechnical Office or geotechnical consultants working either on behalf of these groups or as part of a consultant design team.

This chapter includes general guidelines for geotechnical investigations conducted for project definition and design phases (see Sections 1.1.1 and 1.1.2), and preparation of the subsurface exploration plan for the PS&E phase. Specific information on the number and types of explorations for PS&E level design is provided in the chapters for the specific design elements.

To assure success of a project, it is important for the geotechnical designer to become involved in the project at an early stage. The usual process starts with studying the preliminary project plans, gathering existing site data, determining the critical features of the project, and visiting the site, preferably with the project and structural engineer. Good communication throughout the project between the geotechnical designer, the structural designer, and the region project engineer is essential.

2.2 Preliminary Project Planning

2.2.1 Overview

The goal in the initial planning stages is to develop an efficient investigation plan and to identify any potential fatal flaws that could impact design or construction as soon in the project as possible. An effort should be made to maximize the amount of information obtained during each phase of the investigation process and minimize the number of site visits required to obtain information.

For larger projects, it may be beneficial to conduct the field exploration in a phased sequence, consisting of a reconnaissance investigation and a preliminary subsurface investigation during the project definition phase and more detailed exploration conducted during the project design and PS&E development phases. If the subsurface exploration can be conducted in phases, it allows information obtained in the preliminary phase to be used in planning the exploration program for the

detailed design phase. This can be cost effective in maximizing the efficiency of the explorations in the subsequent phases. That is, the likely depths of the test borings are known, problem soil layers can be identified and sampled in subsequent phases, and the lab testing program can be planned with greater efficiency.

The location of the site will play a part in the way the investigation is planned. For projects where mobilization costs for drilling equipment are high, the number of subsurface investigation phases should be minimized, even on fairly large projects.

The studies and activities performed during the planning stage should be documented. A list of references should be developed, citing nearby explorations, notes from field visits and conversations with design engineers and construction engineers from nearby projects. Any critical issues that are identified during the planning stages should be documented, such as geohazards that are identified. At a minimum, enough documentation should be maintained so that another engineer picking up the project would not have to go through the same search for information.

2.2.2 Office Review

The geotechnical designer should become completely familiar with the proposed project elements by studying the preliminary plans provided by the region project design office. Location and size of structures, embankments and cuts should be determined. Discuss with the structural designers the amount of flexibility in the location of structures and determine the approximate magnitude of the loads to be transmitted.

Site exploration begins by identifying the major geologic processes that have affected the project site. Soils deposited by a particular geologic process assume characteristic topographic features or landforms that can be readily identified by the geotechnical designer. A landform contains soils with generally similar engineering properties and typically extends irregularly over wide areas of a project alignment. Early identification of landforms is used to optimize the subsurface exploration program.

Many of the soils in the state of Washington fall into geologic provinces with distinct soil types typical of the province. For example much of the Puget Sound lowland has been glaciated, and the soils are typically related to glacial processes. Eastern Washington geology generally consists of basalt flows capped by glacial flood and loess deposits.

The general geology of a project may also give indications of soil conditions that may or may not be encountered in test borings, for instance boulders and large cobbles in glacially deposited or glacial flood deposits, buried trees in debris flow deposits, or relatively fresh rock encountered in residual soils deposits in the coast range.

One of the objects of the office review is to plan site reconnaissance and prepare a conceptual plan for subsurface exploration.

2.2.2.1 Site Geology and Seismicity

Topographic Maps – Topographic maps are generally readily available at a scale of 1:24,000 (7.5 minute) for the all of Washington State. These maps are prepared by the U.S. Geological Survey (USGS). The maps provide information on the overall topography of the site including drainage patterns, slope inclinations, wetlands and general accessibility for field exploration. Used in conjunction with geologic maps and aerial photos, easily recognized geologic features can sometimes be identified. The headscarps and hummocky terrain of landslides can often be identified from topographic maps.

Geologic Maps – The Department of Natural Resources (DNR) Division of Geology and Earth Resource has geologic map coverage of most of the state at 1:100,000 scale. The maps show the distribution of the basic geologic units and provide a brief description of each deposit and rock type including depositional environment and relative age. The maps also include a list of references that may provide more information on a particular area.

The DNR also has published maps showing the extent of geohazards in selected areas of the state. These maps give an indication of the potential problem areas. The maps showing slope stability and liquefiable soils are particularly useful. The DNR has published liquefaction susceptibility maps for several areas in the Puget Sound Region. These maps give a general indication of the extent of liquefiable soils in the region.

Geologic maps are also available from the USGS. Coverage of Washington is not complete, but the maps are readily available from USGS and may be available from the DNR Library. Seismic acceleration maps are also available from the USGS and can be found on their website. The peak ground acceleration map provided in Chapter 6 has been adapted from the USGS maps.

Some local agencies have developed geohazard maps depicting flood plains or areas of steep slopes. These maps are available from the individual cities and counties.

Aerial Photos – Aerial photos along the state route alignments can generally be obtained from the WSDOT Geographic Services Office in Tumwater. Aerial photos can be one of the most useful sources of information for planning the subsurface exploration program. When used with a general understanding of the geology of the site and limited subsurface information, the extent of geologic deposits on the site can often be determined. Using stereo-pairs of photos can greatly enhance the interpretation of landforms.

The identification of a landform as a dune, terrace deposit, alluvial fan, esker, moraine, or other type of deposit often permits the general subsurface conditions to be established within given limits and thus yields the initial appraisal of the situation. Drainage patterns can also aid in the identification of soil type and in the structural characteristics of the underlying rock. The maximum amount of information will be obtained when aerial photos are used in conjunction with field investigations that can verify and correct interpretations.

Landslides are often recognizable in aerial photos by slide formed features or conditions, including hillside scars; disturbed or disrupted soil and vegetation patterns; distinctive changes in slope or drainage patterns; irregular, hummucky surfaces; small undrained depressions; step-like terraces; and steep hillside scarps.

Although one of the more difficult features to evaluate, vegetation is often indicative of subsurface conditions. The relationship between vegetation soil type, moisture content, topography and other pertinent factors may be important and any variations should be checked in the field.

Aerial photos may be available in both black and white or in color. Color photographs are generally preferred because objects are easier to identify when they appear in their natural color. Fine details and small objects can be identified more positively than on black and white photographs at the same scale and the cause of tonal variations is more readily established.

Aerial photos from different years can give an indication of the history and previous use of the site. A complete set of air photos from the oldest available to the most recent can give an indication of the previous site use, as well as significant changes in topography or landforms due to the more rapid geologic processes such as stream channel migration, beach erosion, landslides, or rockfall.

Remote Sensing – Satellite imagery such as Landsat can often be used for regional interpretations of geologic features and drainage patterns. The AASHTO Manual on Subsurface Investigations (1988) provides a more detailed discussion on the types and availability of satellite imagery. LiDAR (Light Detection And Ranging) mapping uses a laser to measure distances to specific points and is capable of rapidly generating digital elevation data similar to that obtained by traditional photogrammetry techniques. The equipment can be mounted in a small plane or helicopter and can produce accurate digital topographic maps of the terrain beneath the path of the aircraft. One of the advantages of LiDAR is that vegetation can be removed from the database to reveal a "bare earth" model. Landforms that are typically obscured by western Washington's heavy vegetation are often apparent on the "bare earth" view. Similar technology using land based equipment is also becoming available. These techniques are being more widely used for mapping river morphology and flood plains, and geologic hazard such as landslides and may be available from local agencies

Soil Surveys – Agricultural soil surveys in the United States have been conducted by the Department of Agriculture (USDA) in conjunction with state agencies since the early 1900's. The results of the surveys are presented in the form of reports and maps which commonly cover a complete county. The reports, in general, contain a description of the aerial extent, physiography, relief, drainage patterns, climate, and vegetation, as well as the soil deposits of the area covered. The maps show the extent and derivation of the various deposits. The surveys give some information on the slope inclination and erosion hazards that may be common. The reports also provide engineering classifications of the near surface soil and sometimes information on the suitability of the soils for various construction uses as well as an indication of the general drainage characteristics.

The surveys are regional in aspect and only provide information on the top several feet of soil. They should not be used for more than providing some preliminary soil information.

Other Sources – WSDOT's unstable slope data base should be reviewed for any historic problems with slope instability or rock fall problems.

Hydrogeologic surveys can provide regional information on the presence and depth of groundwater. Both the DNR and USGS have completed hydrogeologic surveys in parts of Washington.

Scientific articles and reports on geology in Washington may also be available, through the DNR and university libraries.

2.2.2.2 Previous Site Exploration Data

Most highway transportation projects are on or near existing alignments, and previous subsurface information might be available. For WSDOT projects the Geotechnical Office maintains files at the Materials Lab in Tumwater. Files are generally available for existing bridges, retaining walls, or significant cuts and embankments. Materials reports and source reports that were prepared for alignment studies might also be available either from the Geotechnical Office or the Region Materials Engineer.

Water well records are available from the Department of Ecology. Many logs can be obtained from their website. The soil descriptions are generally not very reliable; however, information on groundwater levels and presence of bedrock can be obtained from them.

The City of Seattle has developed an existing boring database in conjunction with the University of Washington. The database includes borings completed for local agency projects as well as data provided by consultants. The database is available on-line and includes a map showing exploration locations along with PDF images of the boring logs.

2.2.2.3 Previous Site Use

Environmental Impact Statements (EIS) will probably have been completed and will indicate the most recent land use of the area. Note that a review of land use records or reports that describe previous site uses, especially those that could identify the potential for hazardous waste will be contained in a separate report produced by the Environmental Affairs Office (EAO) or their consultant.

Note that identification of potential hazardous subsurface materials could affect the subsurface investigation approach for the geotechnical design. This issue may need to be considered, therefore, in the planning for the geotechnical subsurface investigation. The geotechnical investigation approach will also need to be adjusted during the subsurface investigation if potentially hazardous materials are retrieved during the subsurface investigation, both for crew safety purposes and to comply with environmental regulations.

If, during the office review or during subsequent subsurface investigation potentially hazardous materials are discovered, the EAO should be notified. The EAO will investigate the potential for hazardous waste, defining its nature and extent, and how to address it for the project.

Other site uses may also affect the site investigation approach and possibly the timing of the investigation. Especially important is whether or not the site is historically or archeologically significant, and whether or not there is potential for artifacts to be discovered at the site. The investigation for this type of previous site use should be conducted prior to beginning the geotechnical site investigation. In general, the region project office is responsible for making sure that this investigation is carried out.

While the geotechnical designer is not responsible to specifically carry out a detailed investigation regarding the potential to encounter hazardous subsurface materials or archeological artifacts, the geotechnical designer is responsible to know whether or not such investigations have taken place, to communicate this information to the Field Exploration Manager (FEM), and to adjust the geotechnical site exploration program accordingly.

2.2.2.4 Construction Records

Many WSDOT projects consist of improvement or replacement of existing alignments or facilities. Construction records and existing geotechnical or materials reports are often available from WSDOT files. Headquarters Final Records has the most complete collection of construction records.

Generally the Region Materials Engineer will be the primary contact to obtain any construction records from the Region Project offices. The Geotechnical Office also has some construction records. All three offices should be contacted for available construction records.

Consultation with WSDOT project engineers who may have completed work on similar structures in the same general area should be utilized to gain general information on the soil, foundation, and groundwater conditions. Previous experience may also reveal acceptable foundation conditions for the problems at hand.

Many of the county and city agencies also maintain records of investigations and construction, and these are generally available through each agency.

2.2.3 Site Reconnaissance

2.2.3.1 General

Before the site reconnaissance is performed, the geotechnical designer should have performed the office review as described in Section 2.2.2, as well as given some thought to the field exploration plan. The review of available data should be done prior to the field reconnaissance to establish what to look for at the site. The field reconnaissance should also be done with the preliminary plans in hand. Cross sections rovided with the preliminary plans should be field checked. The cross sections are often generated by photogrammetry and may not accurately represent the existing ground surface. If available, the project design engineer, structural engineer and field exploration supervisor should also participate in the site visit.

Note the location, type and depth of any existing structures or abandoned foundations that may infringe on the new structure. Inspect any nearby structures to determine their performance. If settlement or lateral movement is suspected, obtain the original structure plans and arrange to have the structure surveyed using the original benchmark, if possible.

For water crossings, inspect structure footings and the stream banks up and down stream for evidence of scour. Riprap present around the bridge foundation may indicate a past scour problem, could impact the location of test borings and will need to be dealt with during construction. Take note of the streambed material. Often large cobbles and boulders are exposed in the stream bed, but not encountered in the borings or noted on the boring logs. The boulders are an indication of unexpected subsurface obstructions to deep foundation installation.

Relate site conditions to proposed boring locations. Check access for exploration equipment and make an initial determination of what type of equipment might be best suited to the site conditions. If site preparation is necessary, note the type of equipment, such as a bulldozer, that may be needed for drilling equipment access. Note potential problems with utilities such as overhead and underground power, site access, private property or other obstructions. While utility clearances will need to be obtained before the subsurface exploration begins, the locations will influence where explorations can be located. Note any water sources that could be used during drilling. Also note traffic control needs to accomplish the field exploration program, considering the practical aspects of the proposed drilling plan with regard to impact to the public. If borings are to be located in a stream bed, the reconnaissance should note the size of the barge best suited for the job, details of anchoring, depth of water, locations for launching the barge, etc. Notes should be made as to which type of drilling is best suited to the site. Also note potential problems with borings such as shallow groundwater table, loose or heaving sands, cobbles and boulders, etc. Availability of water, if coring or mud rotary methods are anticipated, should be determined. Special sampling equipment needed, such as undisturbed sampling equipment, should be noted. This evaluation of field investigation logistics should be done with the assistance of the geotechnical field exploration manager or supervisors to take advantage of their expertise in working with geotechnical exploration equipment and in conducting a geotechnical field investigation (see Section 3.2).

Right of Entry on WSDOT projects is generally obtained through the project office. However, note proximity of residences and buildings for possible difficulties due to noise and other disturbances during the subsurface exploration. Local residents can often provide some information on the history of the site.

Compare the topography of the site with that shown on maps and try to confirm the assumptions made during the office review concerning the site geology. Observe and note natural occurring exposures such as river banks, natural escarpments, quarries, highway or railway cuts and rock outcrops. Measure the inclination of any existing steep slopes. Note and describe the type and amount of fill that has been placed on the site.

Note the extent of any existing unstable slopes or erosion features. For unstable slopes or landslides note the length and width of the area affected. Note any other indications of instability such as pistol butting of trees, hummocky terrain or springs. Note types of vegetation present. Full investigation of these issues will require review of the site conditions well above and below the facility alignment, and may extend on to private property. Right of entry may be needed in such cases to complete the site reconnaissance. If steep slopes must be accessed to fully investigate the site, safety

issues will need to be addressed before attempting to access the area, or alternative means of getting into the position to make the necessary observations should be considered (e.g., a man-lift, or use of a helicopter).

Note the presence of any wetland or other surface water.

Hand holes or probes may be useful to obtain information on depth of soft soils.

Photographs are valuable records of the site visit and should be labeled with the approximate stationing, direction of view, date, and a brief title. Photos should be obtained of all the site features listed above and of the probable exploration locations.

A record of the field visit should be kept and included in the project file. Measures should be taken to permanently archive any photographs taken. The record should list and describe significant site features as discussed above along with approximate stationing. An example field reconnaissance report form is included in the FHWA Soil and Foundations Workshop Manual (Samtani and Nowatzki, 2006).

Special site reconnaissance requirements for investigation of rock slopes are provided, by reference, in Chapter 12.

2.3 Development of the Subsurface Exploration Plan

2.3.1 General Considerations for Preparation of the Exploration Plan

If the site reconnaissance is performed as part of a project definition phase investigation, the results will be used to develop the project definition conceptual level geotechnical report in accordance with Chapter 23. Otherwise, the site reconnaissance and office review results are used to develop the project design and/or PS&E phase field investigation.

A description of the site data needed for each type of project is provided in the Design Manual Chapters 510 and 1130. The sections that follow expand on the considerations required for the preparation of the subsurface exploration plan. Development of exploration plans for geotechnical baseline reports is covered in Chapter 22.

2.3.2 Criteria for Development

The goal of the geotechnical investigation program is to obtain the engineering properties of the soil or rock and to define the aerial extent, depth, and thickness of each identifiable soil/rock stratum, within a depth that could affect the design of the structure, fill, cut, landslide, or other project element, dependent on the size and nature of the element. Typical properties and conditions to be evaluated include permeability, compressibility, shear strength, the location of groundwater and the presence and magnitude of artesian pressures, if present. Regarding the determination of properties for design, the focus of the exploration and testing program should be on the geologic unit/stratum, and the number of measurements of each critical design property in each unit/stratum to have a reasonable degree of confidence in the property measured (see Chapter 5). The geotechnical investigation at the PS&E level should be adequate to fully define the subsurface conditions for design and construction purposes, and shall be consistent with the national standards of practice identified in this manual

and as specifically augmented in this manual, subject to adjustment based on the variability of the site conditions and the potential impact of site condition variability as determined based on the judgment of an experienced geotechnical engineer or engineering geologist.

The type, location, size and depth of the explorations and testing are dependent upon the nature and size of the project and on the degree of complexity and critical nature of the subsurface conditions. In general, it is justifiable to spend additional money on explorations and related testing and engineering beyond the standards as identified in this manual as long as sufficient savings can be realized in the project construction costs. Consideration should be given to the small cost of a boring in relation to the foundation cost. A test boring will typically cost less than one driven pile. Yet the knowledge gained from the boring may permit a more efficient design that may allow elimination of one or more piles for that structure.

Consideration should be given to how sensitive the structure or embankment is to variations in subsurface conditions when planning the geotechnical investigation. Embankments can generally tolerate several inches of settlement while a structure may be limited to less than one inch. Embankment loads are spread over a wide area while structure loads are concentrated.

Some consideration should be given to the amount of risk that unknown soil conditions could bring to the project (e.g., what is the risk to the constructability and functioning of the facility if detailed subsurface information at a specific location is not obtained?). There are times when soil conditions may be understood fairly well for the geotechnical design, but that unknown soil conditions could affect the cost of the project. Generally if rock is encountered at the foundation grade in a boring at a pier location, the location and quality of the rock should be explored at the other side of the pier. If rock may fall off towards the river, make sure the borings explore the rock contact on the front side of the footing.

Specific requirements for boring spacing, depth, and sampling frequency are provided in Chapter 8 for foundations and hydraulic structures, Chapter 9 for embankments, Chapter 10 for cuts, Chapter 15 for walls, Chapter 17 for noise walls, signal and sign foundations, culverts, and buildings, and by reference to other documents/ manuals in Chapters 11, 12, 13, and 19 for ground improvement, rock cuts, landslides and infiltration facilities, respectively. While engineering judgment will need to be applied by a licensed and experienced geotechnical professional to adapt the exploration program to the foundation types and depths needed and to the variability in the subsurface conditions observed, the intent of specific requirements provided in the chapters identified above regarding the minimum level of exploration needed should be carried out.

The specific exploration requirements identified in the chapters identified above should be used only as a first step in estimating the number of borings for a particular design, as actual boring spacings will depend upon the project type and geologic environment. In areas underlain by heterogeneous soil deposits and/or rock formations, it will probably be necessary to drill more frequently and/or deeper than the minimum guidelines provided in these chapters to capture variations in soil and/or rock type and to assess consistency across the site area. Even the best and most detailed subsurface exploration programs may not identify every important subsurface problem

condition if conditions are highly variable. The goal of the subsurface exploration program, however, is to reduce the risk of such problems to an acceptable minimum.

In a laterally homogeneous area, drilling or advancing a large number of borings may be redundant, since each sample tested would exhibit similar engineering properties. Furthermore, in areas where soil or rock conditions are known to be very favorable to the construction and performance of the foundation type likely to be used (e.g., footings on very dense soil, and groundwater is deep enough to not be a factor), obtaining fewer borings than specified in the chapters identified above may be justified.

Test borings are typically the primary means used to obtain the needed subsurface information and samples for laboratory testing. However, other means of obtaining subsurface data should be considered to provide a more complete picture of the subsurface conditions and to help reduce exploration costs.

Cone probes can be a rapid and cost effective means to reduce the number of conventional borings, yet provide additional data that cannot be obtained from conventional test hole drilling and sampling. Cone data can be especially effective in defining the finer stratigraphy of geologic units, to obtain pore pressure measurements and in-situ permeability and shear wave velocities, as well as obtain data that can be directly correlated to a variety of soil properties. However, the cone is not very useful in dense to very dense soils or soils with larger gravels and cobbles (due to inability to penetrate such soils). The cone can be especially useful in comparison to conventional borings when heaving sands are present. If cone probes are used to supplement a subsurface exploration program, some conventional test hole data are necessary to correlate readings from the probe to physical samples of the soil (since the cone is not capable of retrieving physical soil samples, as well as to obtain soil samples for laboratory measurement of soil properties.

Similarly, in-situ testing devices such as the pressuremeter and vane shear can be conducted to supplement conventional test hole drilling to obtain specific in-situ properties. For example, the pressuremeter is useful for obtaining in-situ soil stiffness properties that can be used to more accurately assess settlement or lateral load response of foundations. Shear vane testing can be useful to obtain in-situ undrained shear strength of soft cohesive soils. See FHWA Geotechnical Engineering Circular 5 (Sabatini, et al., 2002) for additional information on these types of in-situ tests and their use.

Geophysical techniques should also be considered to fill in the gaps between test holes and to potentially reduce the cost of the geotechnical subsurface investigation. Geophysical techniques are especially useful for defining geologic stratigraphy, and can be useful to identify buried erosion channels, detailed rock surface location, overall rock quality, buried obstructions or cavities, etc., as well as to define certain properties.

Geophysical testing should be used in combination with information from direct methods of exploration, such as SPT, CPT, etc. to establish stratification of the subsurface materials, the profile of the top of bedrock and bedrock quality, depth to groundwater, limits of types of soil deposits, the presence of voids, anomalous deposits, buried pipes, and depths of existing foundations. Geophysical tests shall be selected and conducted in accordance with available ASTM standards. For those cases where ASTM standards are not available, other widely accepted detailed guidelines, such as Sabatini, et al. (2002), AASHTO Manual on Subsurface

Investigations (1988), Arman, et al. (1997) and Campanella (1994), and Sirles (2006) should be used.

Geophysical testing offers some notable advantages and some disadvantages that should be considered before the technique is recommended for a specific application. The advantages are summarized as follows:

- Many geophysical tests are noninvasive and thus, offer, significant benefits in cases where conventional drilling, testing and sampling are difficult (e.g. deposits of gravel, talus deposits) or where potentially contaminated subsurface soils may occur.
- In general, geophysical testing covers a relatively large area, thus providing the opportunity to generally characterize large areas in order to optimize the locations and types of in-situ testing and sampling. Geophysical methods are particularly well suited to projects that have large longitudinal extent compared to lateral extent (such as for new highway construction).
- Geophysical measurement assesses the characteristics of soil and rock at very small strains, typically on the order of 0.001%, thus providing information on truly elastic properties, which are used to evaluate service limit states.
- For the purpose of obtaining subsurface information, geophysical methods are relatively inexpensive when considering cost relative to the large areas over which information can be obtained.

Some of the disadvantages of geophysical methods include:

- Most methods work best for situations in which there is a large difference in stiffness or conductivity between adjacent subsurface units.
- It is difficult to develop good stratigraphic profiling if the general stratigraphy consists of hard material over soft material or resistive material over conductive material.
- Results are generally interpreted qualitatively and, therefore, only an experienced engineer or geologist familiar with the particular testing method can obtain useful results.
- Specialized equipment is required (compared to more conventional subsurface exploration tools).
- Since evaluation is performed at very low strains (or no strain at all), information regarding ultimate strength for evaluation of strength limit states is only obtained by correlation.

There are a number of different geophysical in-situ tests that can be used for stratigraphic information and determination of engineering properties. These methods can be combined with each other and/or combined with the in-situ tests presented in Section 5.4 to provide additional resolution and accuracy. ASTM D 6429, “Standard Guide for Selecting Surface Geophysical Methods” provides additional guidance on selection of suitable methods.

Sampling requirements will depend on the type of soil or rock encountered and the nature of the project element to be designed and the properties necessary for the geotechnical design of that project element. Properties needed for design, and how those properties can best be obtained, should be identified as part of the geotechnical investigation planning process. For example, if soft to stiff cohesive soils are present,

an adequate number of undisturbed samples will need to be obtained to perform the laboratory shear strength and consolidation testing to define the shear strength and compressibility properties needed for design, considering the potential variability of these properties in each geologic unit, as well as to account for problem samples that are discovered to not be usable for testing. The degree of sample disturbance acceptable should also be considered, as well as the ability of the specific sampling technique to retain the high quality undisturbed soils needed (see Chapter 3 regarding sampling techniques). The disturbed sampling technique selected to obtain representative samples for classification and characterization will depend on the size of the bigger particles anticipated. For example, SPT sampling is generally not suitable for soils that contain a large percentage of medium to coarse gravel – in such cases, a Becker hammer sampler may be more appropriate. If the gravelly soils of interest are close enough to the surface, it may be possible to obtain more representative bag samples through test pit techniques. For large projects where shaft foundations are anticipated, and if permits and access can be obtained far enough in advance of when the final design is due, larger diameter augers could be used to install test shafts to evaluate the soils and evaluate shaft constructability. If detailed stratigraphy is needed, for example, to identify potential unstable zones or surfaces, Shelby tube samples or triple tube coring techniques can be used to get a continuous soil or rock sample for visual assessment.

Field instrumentation planning is also crucial to the development of a complete field exploration program. Ground water measurement in terms of its location, pieziometric head, extent across the site, gradient, and connection to surface water features is typically important for most geotechnical designs, and its measurement should always be a part of any geotechnical investigation planning effort. Elimination of ground water measurement from the geotechnical investigation plan must be justified by strong evidence that there is no groundwater present within the depths of interest, or that the presence of ground water will have no effect on the geotechnical design of the project element or its construction. Note that measurement of ground water in the drilled hole at the time of drilling is generally not considered to be adequate for ground water measurement. In granular soil with medium to high permeability, reliable groundwater levels can sometimes be obtained in the drilled hole. At a minimum, groundwater levels should be obtained at completion of drilling after the water level has stabilized and 12 hours after drilling is completed. However, since the presence of drilling fluids and the time required for ground water levels to reach equilibrium after drilling can be significant, measurements of ground water at time of drilling can be misleading. It is generally necessary to install some type of piezometer to make such measurements. The extent of the ground water measurement program shall be capable of evaluating both design and constructability needs (note that this does not mean that the piezometers need to be available for use during construction of the project element, but only means that constructability issues can be assessed). Seasonal or tidal variations in the ground water levels should also be assessed to the extent feasible given the project design schedule. Continuous monitoring of groundwater can be achieved by using electrical piezometers such as vibrating wire type in conjunction with digital data loggers. Additional information on ground water monitoring as part of the field investigation is provided in Mayne, et al. (2002).

Other field instrumentation may be needed as part of a geotechnical investigation for certain situations. For example, where instability is anticipated, inclinometers placed at strategic locations to define the potential failure surface should be installed. The inclinometer should be installed deep enough to be firmly fixed in stable soil. For forensic analysis of existing structures, tilt meters and/or extensometers can be useful for determining the direction and location of structure movement. Setting up survey control of key points on the structure as part of the geotechnical investigation can also be of use in some cases.

2.3.3 Preparing the Exploration Plan

It is important to be confident of the accuracy of the site data provided by the office requesting the geotechnical services, and to clearly understand the scope of services being requested. The office requesting the geotechnical services should also clearly understand what affect approximations in the site data could have on the geotechnical design, and the need to go back later and redo some of the geotechnical work if the impact of such approximations on the geotechnical design is significant. Any geotechnical concerns that are likely to develop, or the need for contingencies, should also be communicated at this time. Communication between the geotechnical designer and the project office is essential throughout the geotechnical investigation. The geotechnical designer is defined as the geotechnical engineer or engineering geologist who has been given responsibility to coordinate and complete the geotechnical design activities for the project. Early communication of potential complications due to geotechnical concerns will result in more cost effective and constructible designs. Any impact to project schedule resulting from the geotechnical investigation as it progresses should also be communicated to the project office promptly. It is the geotechnical designer's responsibility to make sure that this communication takes place.

Once the geotechnical investigation plan has been developed and approved (see Chapter 1), a proposed budget for field exploration, laboratory testing and engineering should be developed and provided to the project office. The basis of this budget, including a description of the scope of work as the geotechnical designer understands it, the date and source of the site data upon which the geotechnical investigation plan was based, and the potential for changes to the plan that could occur once some of the geotechnical subsurface data becomes available must be clearly documented in the letter transmitting the geotechnical project budget.

The proposed locations of the borings should have been checked for accessibility during the site reconnaissance (normally, the drilling supervisor will check for this). It may be necessary to shift the locations of some explorations due to local conditions, such as utilities, encountering obstacles such as boulders during drilling, or changes in engineering plans. The revised locations of these holes should be carefully plotted on the layout by the drill inspector, and the reason for the shift should be noted on the field log. Some tolerance in location of the explorations should be expected and communicated to the drill crew. The amount of tolerance will depend on the topography at the site, the expected soil conditions, stage of exploration, and type of structure. For example, for explorations made during the project definition phase or for cut slope design, exact locations might not be critical. On the other hand, if the test boring is being made to define the rock contact beneath a spread footing, moving

the boring 10 feet might be too much. If the location of the exploration is critical, it may be justified to mobilize a different type of drill rig. Costs incurred during construction because of differing site conditions are generally much greater than the cost of an additional mobilization.

Communication between the geotechnical designer and the drilling inspector during the field exploration is also crucial. The drilling inspector should be briefed as to what subsurface conditions to expect and should contact the geotechnical designer if any significant changes are encountered. It may be necessary to adjust the sampling intervals of depth of explorations or add explorations, if the subsurface conditions are different than expected. If it becomes apparent that such changes that will significantly impact the project budget or schedule, it is important to immediately contact the project office to discuss the situation with them, and come to an agreement on the best course of action, but without impacting the progress of the field crews in accomplishing the work.

The information needed on the drilling request form should be as complete as possible to make efficient use of the exploration crew's time. They need to know how to get to the site, where to drill, what equipment to take, and what difficulties to expect. The drill crew's time should be spent in drilling and sampling and not in sending back for more equipment.

A copy of the WSDOT Field Exploration Request Form is attached in Appendix 2-A. Other examples are available in the National Highway Institute (NHI) Course manuals.

Below is a partial list of information to be included on the field exploration request by the geotechnical designer. Other information should be included as appropriate.

Field Exploration Check List:

- Type of explorations required.
- Sequence of drilling to allow for adjustment in the plan. For example, explorations in areas where soil conditions are unknown or problem soils are expected to be present should be performed in the first stages of the program, to allow for adjustment in sampling intervals or additional explorations to be added.
- Expected soil conditions. Attach field logs from nearby explorations, if available.
- Sampling intervals and types of samples to be obtained.
- Instrumentation and procedures for installation.
- Criteria for ending borings - depth, refusal, thickness of bearing layer, etc. If at all possible, the depth of all explorations should be estimated prior to doing the fieldwork. However, that is not always practical in situations where no previous subsurface information is available and some criteria should be stated on the exploration plan. A criteria recommended for typical use is to have a minimum of 30 feet of material with blow counts of 30 blows per foot or greater, or a minimum of 10 feet into bedrock, and for deep foundations, the boring depth should be at least as deep as the estimated foundation depth plus 20 feet. Note that without communication between the geotechnical designer and drilling inspector, these criteria can sometimes result in borings that are drilled deeper than necessary.
- Coordination of drilling inspector and geotechnical designer regarding when and at what stages of the field exploration communication should take place.

The field exploration supervisor is responsible to obtain the following information, either through field review of the investigation plan, or with the help of the appropriate Region offices:

- Equipment required and access needs
- Known permits required and regulations
- Known utilities
- Special traffic control requirements
- Cost of field exploration services.

Coordination between the field exploration supervisor and the geotechnical designer is necessary to implement the field investigation program, to make sure that there are no logistical problems with the plan implementation.

2.4 Development of the Laboratory Testing Plan

The laboratory testing plan shall be developed in accordance with Section 5.6.2. The laboratory testing plan includes classification and index testing, and soil/rock property tests that can be used directly to assess design parameters. The development of the testing plan shall address the properties needed for geotechnical design, and shall consider the in-situ (field) test data available such that the results from both field and laboratory testing can complement one another to provide a consistent and complete assessment of the properties of the soil and rock strata encountered.

For soil classification/index testing, the plan shall consider the following:

- Enough samples shall be selected in each soil stratum to assess the consistency of each soil stratum,
- When samples are available from more than one test hole for a given soil stratum, samples from more than one test hole should be tested to verify spatial consistency of the soil properties,
- For soil samples with a significant fines content, Atterberg limits tests should at least be attempted to determine the plasticity of the fines.

For performance level laboratory tests, the plan shall consider the following:

- Availability of samples suitable for testing – note that the field exploration plan should address the laboratory sample needs,
- The number of performance tests for each property required for the geotechnical design needed to assess the potential variability in the property within a given geologic stratum, though it is recognized that it will generally not be possible to obtain enough test results to develop meaningful statistics for the property,
- The laboratory testing should be conducted in a way that best represents the in-situ conditions from which the tested samples were taken, and the stresses and moisture conditions to which the soil/rock being characterized through the tests will be subjected based on the geotechnical design anticipated,
- Minimization of sample disturbance, when testing is conducted on undisturbed samples,
- Classification/index testing to be conducted on the samples subjected to performance level tests.

The laboratory testing plan shall identify the following information and testing requirements:

- All tests shall be clearly identified as to the location within the borings from which samples to be tested will be taken.
- The specific test procedures to be used shall be identified, including any special sample preparation requirements and specific testing parameters, such as stress levels. If the test procedures have options, the specific options to be used shall be specified.
- The classification/index tests to be conducted on each sample subjected to performance level testing.

2.5 References

Arman, A., Samtani, N., Castelli, R., Munfakh, G., 1997, *Subsurface Investigations: Training Course in Geotechnical and Foundation Engineering*. Report No. FHWA-HI-97-021. Federal Highway Administration, U.S. Department of Transportation.

Campanella, R.G. 1994. "Field Methods for Dynamic Geotechnical Testing: An Overview of Capabilities and Needs." *Dynamic Geotechnical Testing II, Special Technical Publication No. 1213*, ASTM, Philadelphia, PA, pp. 3-23.

Mayne, P. W., Christopher, B.R., and DeJong, J., 2002, *Subsurface Investigations – Geotechnical Site Characterization*, Publication No. FHWA NHI-01-031, National Highway Institute, Federal Highway Administration, Washington, DC, 300 pp.

Sabatini, P.J, Bachus, R.C, Mayne, P.W., Schneider, J.A., Zettler, T.E. (2002), Geotechnical Engineering Circular 5 (GEC5) - Evaluation of Soil and Rock Properties. Report No FHWA-IF-02-034. Federal Highway Administration, U.S. Department of Transportation.

Samtani, N. C., and Nowatzki, E. A., 2006. Soils and Foundations Workshop Reference Manual, Volumes 1 and 2. Washington, DC, National Highway Institute Publication NHI-06-088 and NHI-06-089, Federal Highway Administration, 1056 pp.

Sirles, P. C., 2006. *Use of Geophysics for Transportation Projects – A Synthesis of Highway Practice*, NCHRP Synthesis 357, Transportation Research Board, Washington, DC, 108 pp.

FIELD EXPLORATION REQUEST

DATE: **REVIEWED BY:** _____

REGION: **SR:** _____ **C.S.:** _____ **JOB No.:** _____

PROJECT NAME:

PROJ. CONTACT: _____ **PHONE:** _____

PROJECT TYPE:

☐ **CENTERLINE** ☐ **STRUCTURE** ☐ **LANDSLIDE** ☐ **PIT/QUARRY**

NUMBER OF TEST BORINGS: _____

ESTIMATED DRILL FOOTAGE: _____

TYPE OF TEST HOLE:

☐ **STANDARD TEST HOLE**
☐ **CPT**
☐ **STANDARD TEST HOLE AND CPT**
☐ **OTHER** _____

INSITU TESTING: **FREQUENCY OF TESTING:**

☐ **VANE SHEAR** _____
☐ **CPT PORE PRESSURE DISAPATION** _____
☐ **CPT SEISMIC VELOCITY** _____
☐ **OTHER** _____

INSTRUMENTATION:

☐ **OPEN STANDPIPE PIEZO** ☐ **PNEUMATIC PIEZO**
☐ **SLOPE INCLINOMETER** ☐ **OTHER** _____

SAMPLING FREQUENCY:

☐ **STANDARD SPT AT 5 FOOT INTERVALS**
☐ **WSDOT UNDISTURBED SAMPLES**
☐ **SHELBY TUBE UNDISTURBED SAMPLES**
☐ **LONGYEAR UNDISTURBED SAMPLES**
☐ **PISTON SAMPLER UNDISTURBED SAMPLES**
☐ **CONTINUOUS SAMPLING**
☐ **OTHER** _____

Special Instructions

Chapter 3 Field Investigation

3-1 Overview

This chapter addresses subsurface exploration activities performed as part of a geotechnical investigation. Subsurface explorations may include:

- Performing geotechnical soil borings
- Excavating test pits
- Performing field testing (e.g., Standard Penetration Testing (SPT), cone penetration tests, downhole seismic testing, etc.)
- Installing standpipe piezometers (i.e. observation wells) or vibrating wire piezometers
- Other geotechnical instrumentation such as slope inclinometers.

This chapter is organized by activities and policies involved prior to, during, and after exploration. Also addressed, through appendices included with this chapter, are best management practices (BMPs) for erosion and spill prevention during geotechnical field investigations, as well as other potential impacts to the natural environment in the vicinity of the geotechnical investigation site (Appendices 3-C and 3-D), and the handling, and disposing of, contaminated and potentially contaminated materials/samples obtained during the geotechnical field investigation (Appendices 3-E and 3-F). Appendix 3-G provides a listing of the information required to track wells as defined in RCW 18.104.020 and WAC 173-160-111 and which is included in the WSDOT database of well installations. This is information that shall be submitted to WSDOT for any "well" installed on WSDOT property or in connection with WSDOT Projects, regardless of who installs it.

3-2 Activities and Policies – Before Exploration

3-2.1 Field Exploration Plan Development and Permissions

A geotechnical field exploration plan should be formulated as described in Chapter 2. The Geotechnical Project Manager (GPM) assigned to the project is responsible to coordinate with the Region or Washington State Ferries (WSF) Project Office (PO) to prepare the way for the field exploration crews to implement the field exploration program. The GPM also functions as the primary liaison between the Region, Megaprograms, or WSF and the Field Exploration Manager (FEM), to keep the FEM informed as the Region or WSF completes the necessary preparations to begin implementation of the field exploration plan.

Specifically, the GPM should do the following before submitting the final field exploration request to the FEM:

1. Make sure senior Geotechnical Office management agrees with the proposed exploration plan (see Section 1-4).
2. Make sure that the Project Office has provided adequate site data to locate test holes and key project features on paper and in the field.

3. Make sure that the project office has asked for (preferably obtained) an environmental assessment of the site to determine whether or not there is potential to encounter hazardous subsurface materials. The GPM is responsible to have a basic knowledge of previous site use as well.
4. Make sure that the project office has asked for (preferably obtained) an archeological assessment of the site to determine if there is potential to encounter Native American or other artifacts.
5. Coordinate with the project office to make sure any right-of-entry's needed are obtained for the proposed drilling.
6. Coordinate with the project office to make sure the necessary permits are obtained (especially with regard to wetlands and other environmentally sensitive areas).
7. Coordinate with the Field Exploration Supervisor (FES) who will be assigned to the project, and the project office, to conduct a joint field review to evaluate access and other issues related to setting up and finalizing the field exploration program.
8. Act as the liaison between the Field Exploration Manager (FEM) and the project office to make sure the FEM knows when all the tasks have been completed and to inform the FEM of the results so that the exploration program can be properly estimated.

To obtain permits and right-of-entry, a preliminary field exploration plan will likely be needed by the Region (or WSF) before the final exploration plan is completed and turned in. Therefore, the development of the field exploration plan may require a somewhat iterative process. Once enough field exploration plan details have been developed, the GPM should request that those who will be directly negotiating with local owners to obtain right-of entry (if needed) invite the FEM or FES to assist in those negotiations. This generally makes the negotiations go much smoother.

If the GPM recognizes, either through an environmental assessment or through general knowledge of the previous site use, that there is a potential to encounter hazardous materials during the geotechnical field exploration, it is important that the GPM make the FEM aware of this as soon as possible in the development of the exploration plan. This will enable the FEM to be prepared to meet the requirements as specified in Appendices 3-C and 3-D, as well as to initiate procedures provided in Appendices 3-E and 3-F. The potential to encounter hazardous subsurface materials can completely change the approach, cost, and scheduling for the site exploration activities.

A preliminary field exploration plan is also needed for use as the basis for conducting the joint field review mentioned above. This field review should be used to determine how each individual exploration site will be accessed, the type of drill equipment best suited for the site, areas for utility locates, required traffic control, and to identify any permit, right-of-entry, and environmental issues. Adjustments to the specific locations of exploration points can be made as needed during the field review to address the above issues.

During the field review, the FES will stake the borings if they have not already been located and if right-of-entry (if needed) has been obtained. The FES should also assess the traffic control needs for the exploration work at this time. The FES will coordinate directly with the Maintenance Office for traffic control. After staking borings, the FES is responsible for calling all utility locates a minimum of 48 hours prior to the start of explorations.

The final field exploration plan shall be developed as described in Chapter 2. The plan should include provisions and costs to decommission installed wells. Once the final field exploration plan has been completed, the FEM will provide a cost estimate to the GPM to complete the field exploration plan. Once the expenditure for the field exploration has been authorized, the GPM must then notify the FEM to commence with the field exploration. Once the exploration plan has been executed, any subsequent requests to modify the plan should be provided in writing by the GPM to the FES. The FES will respond with an updated estimate and schedule for requested plan change.

If the geotechnical design is to be conducted by a geotechnical consultant, the WSDOT GPM who is overseeing the consultant task assignment or agreement is responsible to make sure that the consultant accomplishes the tasks described above and to assist in the coordination between the consultant and the FEM. If the consultant needs changes to the field exploration plan, the GPM is responsible to provide input to the FES or FEM as to the acceptability of the changes. The FES or FEM is not to act on the requested changes to the field exploration plan without input from the GPM.

While the GPM is responsible to coordinate between the project office and the FEM or FES regarding permits, the project office is ultimately responsible to perform or provide right-of-entry, hazardous materials assessment and archeological evaluation for the site, and to provide adequate site data to locate the exploration points for exploration plan development and for location in the field.

Currently, WSDOT has a five-year General Hydraulic Project Approval (HPA) for performing geotechnical exploration in both marine and fresh waters statewide. Once again the FEM or FES should be involved early in the process to define all technical questions for each project. For all barge projects, the drilling shall be in compliance with the provisions described in the general HPA from the Washington Department of Fish & Wildlife (WDFW).

The FEM (or as delegated to a FES) will assign the project to a drill inspector(s) and a drill crew. The drill inspector will then initiate a meeting with the GPM to discuss the objectives and any particulars of the exploration plan. Either the FES or the drill inspector should notify the GPM of the anticipated start date of the requested work.

3-2.2 Department of Ecology Requirements for Wells

Well definitions, and submittal, construction, protection, and decommissioning requirements as specified in RCW 18.104 and WAC 173-160 shall be followed.

In accordance with RCW 18.104.020 and WAC 173-160-111, a well is defined as a water well, resource protection well, dewatering well, and geotechnical soil boring. Specifically, RCW 18.104.020(8) defines *"geotechnical soil boring"* or *"boring"* as *"a well drilled for the purpose of obtaining soil samples or information to ascertain structural properties of the subsurface"*.

A "resource protection well" is defined as *"a cased boring intended or used to collect subsurface information or to determine the existence or migration of pollutants within an underground formation. Resource protection wells include monitoring wells, observation wells, piezometers, spill response wells, remediation wells, environmental investigation wells, vapor extraction wells, ground source heat pump boring, grounding wells, and instrumentation wells."* Note that these definitions of a well do not apply to *"excavations made for the purpose of … inserting any device or instrument less than 10 feet in depth into the soil for the sole purpose of performing soil or water testing or analysis or establishing soil moisture content as long as there is no withdrawal of water in any quantity other than as necessary to perform the intended testing or analysis."*

Reports required for wells by the Washington State Department of Ecology (hereinafter referred to as Ecology) in accordance with the RCWs and WACs include Notice of Intent (NOI) and water well reports for both the construction and decommissioning of wells.

The following sections provide the most relevant RCWs and WACs for wells. The WACs and RCWs identified herein are not intended to be an exhaustive list. Other RCWs and WACs may also be applicable.

3-2.2.1 *RCWs and WACs for Geotechnical Soil Borings*

Given the definition of "well" provided above, the following RCWs and WACs are applicable to geotechnical borings:

WAC 173-160-101: General standards that apply to all water wells

RCW 18.104.050: Reports of well construction or decommissioning

WAC 173-160-141: Requirements regarding water well reports

RCW 18.104.048: Prior notice of well construction, reconstruction, or decommissioning

WAC 173-160-151: Prior notice to the Department of Ecology and fees regarding well construction, reconstruction, and decommissioning

WAC 173-160-181: Requirements for preserving the natural barriers to groundwater movement between aquifers

WAC 173-160-191: Design and construction requirements for completing wells

WAC 173-160-311: Well tagging requirements

WAC 173-160-381: Standards for decommissioning a well

WAC 173-160-420: General construction requirements for resource protection wells

WAC 173-160-460: Decommissioning process for resource protection wells

For a geotechnical boring, an NOI as described in WAC 173-160-151 shall be provided to Ecology, with a copy to the WSDOT Geotechnical Office, at least 72 hours prior to drilling the boring. If the boring is not left open or cased after it is drilled, the well report(s) developed in accordance with WAC 173-160-141 for both conducting the boring and its decommissioning can be provided at the same time. In this case, a well tag (i.e., per WAC 173-160-311) is not required.

For a geotechnical boring that is not decommissioned immediately after the boring is completed, but is left open or cased after it is drilled to provide opportunity to monitor ground water, movements, or access for future testing (i.e., a resource protection well as previously defined), a NOI as described in WAC 173-160-151 shall be provided to Ecology, with a copy to the WSDOT Geotechnical Office, at least 72 hours prior to drilling the boring. A well report describing the well construction shall be provided to Ecology after the boring is complete in accordance with WAC 173-160-141.

Resource protection wells shall be physically identified with a well identification tag provided by Ecology in accordance with WAC 173-160-311 and WAC 173-160-420. The well identification tag must be placed in a secure, visible location. Per WAC 173-160-311 and WAC 173-160-420, the well tag shall be permanently attached to the outer well casing or other prominent well feature and be visible above land surface.

3-2.2.2 *Definition and Responsibilities of the Well Contractor and Well Owner*

RCW 18.104.020 defines the "well contractor" as "any person, firm, partnership, copartnership, corporation, association, or other entity, licensed and bonded under chapter 18.27 RCW, engaged in the business of constructing water wells." RCW 18.104.020 also applies this definition to resource protection well contractors.

Wells, as defined in RCW 18.104.020 and WAC 173-160-111, which includes geotechnical borings and resource protection wells, shall be drilled by a licensed resource protection well operator as specified in RCW 18.104.095, RCW 18.104.097, and WAC 173-162. A resource protection well operator with a training license (i.e., as specified in RCW 18.104.097) may operate the drilling rig to conduct the well construction, including geotechnical borings, under the supervision of a licensed operator as allowed in that RCW. Licenses shall be kept current as specified in RCW 18.104.100.

RCW 18.104.020 defines the "well owner" as the "person, firm, partnership, co-partnership, corporation, association, other entity, or any combination of these, who owns the property on which the well is or will be constructed or has the right to the well by means of an easement, covenant, or other enforceable legal instrument for the purpose of benefiting from the well." In general, responsibilities of the well owner include making sure that NOIs, well reports, and fees are properly submitted to Ecology in a timely manner, that the well is protected from damage and contamination, and that it is properly decommissioned.

As applied to the various situations in which wells are constructed on WSDOT right-of-way or other property where WSDOT may be considered the "well owner" as defined under RCW 18.104.020 by WSDOT or other entities, the application of this definition and the associated responsibilities are as follows:

- For all wells that are constructed by WSDOT drill crews (including headquarters crews and NW Region crews), and private sector contract drill crews hired by WSDOT, WSDOT will fulfill the responsibilities of the well owner, making sure that NOIs, well reports, and fees are properly submitted to Ecology in a timely manner, that the well is protected from damage and contamination, and that it is properly decommissioned.
- For all wells constructed by consultants and their subcontracted drill crews, the consultant shall be responsible to make sure that, for each well, survey coordinates, NOIs, well reports, and fees are properly submitted to the Ecology in a timely manner and to make sure that a copy of those documents are provided to the WSDOT Geotechnical Office for its records. WSDOT will maintain primary responsibility to make sure that the well is protected from damage and contamination, and that it is properly decommissioned.
- For all wells constructed by design-build contractors, the design-builder shall be responsible to submit NOIs, well reports, and fees to Ecology, to make sure wells are properly tagged, and shall be responsible to make sure that the well is protected from damage and contamination and that it is properly decommissioned. In addition, for each well, the design-builder shall submit copies of survey coordinates, the NOIs, and well reports submitted to Ecology to the WSDOT Geotechnical Office for its records. WSDOT, as the well owner, will provide oversight to make sure that the design-builder carries out its responsibilities regarding wells.
- For all wells as defined above constructed by another agency or private sector developer within WSDOT right-of-way, the responsibility for the wells shall be as defined in the Subterranean Monitoring Permit (see also the WSDOT Development Services Manual, Section 5.4.05). The developer, or other agency, shall be responsible to submit, for each well, survey coordinates, NOIs, well reports, and fees to Ecology, to make sure wells are properly tagged, and shall be responsible to make sure that the well is protected from damage and contamination and that it is properly decommissioned. In addition, the other agency or private developer shall submit a copy of the survey coordinates, NOIs and well reports submitted to Ecology to the WSDOT Geotechnical Office for its records. WSDOT, as the well owner, will provide oversight to make sure that the other agency or private sector developer carries out its responsibilities regarding wells.
- For land purchased by WSDOT that contains wells, WSDOT becomes the owner of the wells and is responsible to protect the wells from contamination and damage. WSDOT becomes responsible to decommission the wells, unless WSDOT requires the previous landowner to decommission the wells through the purchase agreement. If the prior landowner is required to decommission the wells, it shall provide the required decommissioning notices and reports to Ecology, with copies to WSDOT.

Protection of wells between well construction and decommissioning shall meet the requirements in WAC 173-160-101 and WAC 173-160-420.

3-2.2.3 *Submittal and Tracking Requirements for Wells*

WSDOT will maintain a database of all well installations on WSDOT property made by WSDOT, its contract drill crews, consultants, design-builders, other agencies, and private sector developers. Consultants, design-builders, and other agencies shall provide pertinent information as listed in Appendix 3-G for the database in addition to the following documents for each installed well:

- A copy of all NOIs submitted Ecology, both for constructing the well and its decommissioning
- A copy of the well report submitted to Ecology, both for constructing the well and for its decommissioning

The above documents will be stored by the WSDOT Geotechnical Office, and a link to these documents will be included in the database for easy retrieval.

3-3 Activities and Policies – During Exploration

The drill inspector will maintain regular contact with the GPM. The drill inspector shall contact the GPM, for example, when unanticipated conditions or difficulties are encountered, significant schedule delays are anticipated, and prior to terminating the exploration and installing instrumentation. The driller is required to complete a daily drill report at the end of each workday. This is also required of any contract driller working for WSDOT. The drilling inspector is also required to complete a daily inspector's report at the end of each workday. At the completion of each workweek these reports shall be turned in to the FES and put in the project file. Examples for both the daily drill and inspector reports that show the minimum required documentation are included in Appendix 3-A.

Exploration activities during drilling must adhere to the Geotechnical Office's Best Management Practices to mitigate for sediment/erosion control and spill prevention (see Appendix 3-C).

Methods for advancing geotechnical borings should be in accordance with the following ASTM standards:

- D6151-97(2003) Standard Practice for Using Hollow-Stem Augers for Geotechnical Exploration and Soil Sampling
- D5876-95(2000) Standard Guide for Use of Direct Rotary Wireline Casing Advancement Drilling Methods for Geoenvironmental Exploration and Installation of Subsurface Water-Quality Monitoring Devices
- D2113-99 Standard Practice for Rock Core Drilling and Sampling of Rock for Site Investigation

Hollow-stem augers are not to be used for assessment of liquefaction potential; wet rotary methods should be used. Further, care must be exercised during drilling with hollow-stem augers to mitigate for heave and loosening of saturated, liquefiable soils.

Sampling of subsurface materials should be in accordance with the following ASTM standards:

- D1586-99 Standard Test Method for Penetration Test and Split-Barrel Sampling of Soils

- D3550-01 Standard Practice for Thick Wall, Ring-Lined, Split Barrel, Drive Sampling of Soils
- D1587-00 Standard Practice for Thin-Walled Tube Sampling of Soils for Geotechnical Purposes
- D4823-95(2003)e1 Standard Guide for Core Sampling Submerged, Unconsolidated Sediments

In addition to the methods described above for sampling for soft, fine-grained sediments, WSDOT utilizes a thick-walled sampler referred to as the Washington undisturbed sampler. This sampler is lined with 2-inch (I.D.) extrudible brass tubes. The sampler is intended for stiffer fine-grained deposits than what would be suitable for Shelby tubes.

Down-the-hole hammers are not allowed for use in performing Standard Penetration Tests.

Samples should be handled in accordance with the following ASTM standards:

- D4220-95(2000) Standard Practices for Preserving and Transporting Soil Samples
- D5079-02 Standard Practices for Preserving and Transporting Rock Core Samples

Disturbed soil samples should be placed in watertight plastic bags. For moisture- critical geotechnical issues, a portion of the sample should be placed in a moisture tin and sealed with tape. Extreme care must be exercised when handling and transporting undisturbed samples of soft/loose soil; undisturbed samples must also be kept from freezing. Rock cores of soft/weak rock should be wrapped in plastic to preserve in situ moisture conditions. Rock cores should be placed in core boxes from highest to lowest elevation and from left to right. Coring intervals should be clearly labeled and separated. Core breaks made to fit the core in the box must be clearly marked on the core. All soil and rock samples should be removed from the drill site at the end each day of drilling and transported to the laboratory as soon as possible.

In situ testing methods commonly employed in geotechnical investigations should be in accordance with the following ASTM standards:

- D2573-01 Standard Test Method for Field Vane Shear Test in Cohesive Soil
- D5778-95(2000) Standard Test Method for Performing Electronic Friction Cone and Piezocone Penetration Testing of Soils

Groundwater monitoring and in situ characterization methods commonly employed in geotechnical investigations should be in accordance with the following ASTM standards:

- D5092-02 Standard Practice for Design and Installation of Ground Water Monitoring Wells in Aquifers
- D4750-87(2001) Standard Test Method for Determining Subsurface Liquid Levels in a Borehole or Monitoring Well (Observation Well)
- D4044-96(2002) Standard Test Method for (Field Procedure) for Instantaneous Change in Head (Slug) Tests for Determining Hydraulic Properties of Aquifers

Additional information on ground water investigation and monitoring is provided in Mayne, et al. (2002).

As described herein, the term "piezometer" includes the use of open standpipe piezometers and pore pressure transducers (pneumatic or vibrating wire). RCW 18.104.020/WAC 173.160.111 defines these as observation or monitoring wells, and when pressure transducers are used, as an instrumentation well. As a minimum, groundwater levels should be measured/recorded prior to the daily commencement of drilling activities and upon completion of piezometer installation. Subsequent monitoring is at the discretion of the GPM. Prior to constructing a piezometer, the boring should be thoroughly purged of drill fluids using clean, potable water. The GPM should provide design input on the construction of the piezometer, specifically regarding the screened interval and seals. Piezometers shall be constructed in accordance with Ecology regulations (RCW 18.104/WAC 173.160) governing water wells. Following completion of the piezometer, the piezometer should be repeatedly surged or bailed to develop the well screen and optimize hydraulic connectivity with the formation. Furthermore, the piezometer should be sealed within the aquifer of interest, not hydraulically linking multiple aquifers.

Slope inclinometers are routinely employed for slope stability investigations. The installation and monitoring of slope inclinometers should be in accordance with the following ASTM Standard:

- D6230-98 Standard Test Method for Monitoring Ground Movement Using Probe-Type Inclinometers

Explorations using hand equipment such as augers and drive probes may also be useful for some geotechnical investigations, such as to define lateral and vertical extent of soft/loose, near-surface deposits. The WSDOT portable penetrometer consists of 1.75 inch diameter rod which tapers to a rounded 0.5 inch tip over a 4.5 inch length, and which is driven in the ground with a 35 lb weight dropped from a 25.5 inch height. Detailed procedures for portable penetrometer testing are provided in Appendix 3-B. Standard Penetration Test correlations for the WSDOT portable penetrometer (PP) are approximated as follows:

Soil Type	SPT Correlation
Clay	# PP blows/4
Silt	# PP blows/3
Sand/Gravel	# PP blows/2

The excavation of test pits can provide valuable subsurface information not determinable or well characterized by test borings. Extreme care should be exercised around open excavations, and access within them should adhere to Washington Administrative Code (WAC) sections 296-155-655 and 296-155-657. Prior to de- mobilizing, the drill inspector should ensure location information (e.g., station, offset, elevation and/or state plane coordinates) of all the explorations are recorded on the field logs. If exact location information is unavailable upon completion of field activities, a sketch of each exploration location should be made indicating relationship to observable features (i.e., bridge/ structure, mile post, etc.). This information should be provided with the field logs to the GPM. In addition to providing field logs for all explorations, required documentation for test pits should include a scale drawing of the excavation and photographs of the excavated faces. Sampling methods and in situ measurement devices such as pocket penetrometers should also be documented. Detailed requirements for boring logs are provided in Chapter 4.

3-4 Activities and Policies – After Exploration

3-4.1 Field Notes, Finished Log, and Sample Handling

Upon completion, the drilling inspector shall transmit recovered samples to the State Materials Lab and provide both the original copy of the field notes and a finished log for all explorations to the GPM. If the samples to be transmitted to the lab are known to be contaminated or are potentially contaminated, the procedures provided in Appendices 3-E and 3-F shall be followed.

Upon completion of the subsurface explorations, a finished well report that meets the requirements of WAC 173-160-141 shall be submitted to Ecology within 30 days of completion of the last boring for the project or the end of the calendar year, whichever occurs first.

3-4.2 Well Protection and Decommissioning Requirements

The primary goals of the policies and procedures outlined in this section are to ensure proper protection of wells in service, timely decommissioning of all wells, decrease the potential for incomplete documentation of well installation and decommissioning with Ecology, and increase the degree to which complete documentation is verified with Ecology.

Protection of wells between well construction and decommissioning shall meet the requirements in WAC 173-160-101 and WAC 173-160-420. With assistance from the FES in charge of the well installations, the GPM should coordinate with the local WSDOT maintenance office to make sure they are aware of any wells located within their jurisdiction.

RCW 18.104.020 defines "decommission" as *"filling or plugging a well so that it will not produce water, serve as a channel for movement of water or pollution, or allow the entry of pollutants into the well or aquifers"*. Well decommissioning shall be carried out in accordance with WAC 173-160-420 and WAC 173-160-460 (see Section 3-2.2). The GPM will make the request for decommissioning to the FEM, updating the original field exploration request as needed (initial estimate will be in the original estimate for the drilling). The GPM is responsible to coordinate the well decommissioning with the Region Project Office, and for wells preserved for longer term monitoring, also with the Geotechnical Design and Project Development Engineer.

The timing of decommissioning is determined as follows:

Design-Bid-Build – For these projects, decommissioning of wells is scheduled by the assigned GPM when the project reaches final PS&E review, or sooner, if possible. The GPM is responsible for reaching out to the Project Office, informing them of the need to decommission and making appropriate arrangements with the FEM. In addition to less formal notification to the Project Office (email, etc.), a comment indicating the need for well decommissioning should also be provided as part of PS&E review. If the geotechnical design work is conducted by either a HQ or region consultant, the WSDOT staff assigned to review the consultant's work will make sure any wells installed are properly decommissioned. Ideally, well decommissioning should be included in the consultant's scope of work, but if not the HQ GPM will do the coordination with the FEM to make sure the wells get decommissioned.

Design Build – For these projects, for wells installed during project development, the GPM is responsible for informing the WSDOT Project Office during final review of the RFP of the need to decommission prior to RFP advertisement. For wells installed by the Design-Builder, the Design-Builder shall decommission the wells prior to contract physical completion. The GPM should make sure that specifications requiring decommissioning by the Design-Builder are included in the RFP.

For either type of project (i.e., Design-Bid-Build or Design-Build), if the GPM feels that the well(s) should be maintained for long-term monitoring through project construction (e.g., for landslides or ground water monitoring), the GPM shall notify the WSDOT FEM and the Geotechnical Design and Project Development Engineer so that the well can be tracked for future decommissioning. The GPM is also responsible for informing the WSDOT Project Office of the need for special provisions or RFP language to handle both the protection-in-place of the wells and their decommissioning. In addition, the locations of wells to be protected will be clearly shown on the project plans. Standard Specification language is already in place to require the Contractor to protect the wells and not disturb them as a result of any construction activity. Decommissioning of these wells should occur at or about Contract Physical Completion, unless other arrangements are made to leave the wells in place longer term, and will be triggered by the Construction Project Engineer notifying the Geotechnical Office. If left in place longer term, the GPM is responsible to request and arrange for the proper decommissioning of the wells and all Ecology reporting requirements.

Historic Wells – During project development, construction, or maintenance activities, previously installed, historic wells may be encountered. During project development, the GPM should attempt to locate and positively identify all such wells, determine whether or not they have been properly decommissioned, that records for those wells are available, and that those records have been submitted to Ecology. If the well has not been decommissioned, or if the records for the well are lacking, the GPM should work with the FES to make sure that the well is properly decommissioned. If the region Project Office discovers the historic wells, the GPM assigned to the project should be notified as soon as practical.

At least 72 hours prior to well decommissioning, a NOI as described in WAC 173-160-151 shall be provided to Ecology. Once the decommissioning is completed, a well report documenting the decommissioning shall be submitted to Ecology in accordance with WAC 173-160-141 and WAC 173-160-420. In both cases, a copy of the NOI and well report for decommissioning shall be retained by the WSDOT Geotechnical Office for its records if drilled by state forces or its drilling contractors, or shall be submitted to the WSDOT Geotechnical Office for its records if drilled by others (e.g., consultants, design-build contractors, other governmental agencies, developers).

3-5 Standard Penetration Test (SPT) Calibration

Calibration to determine specific hammer system efficiencies shall be developed in general accordance with ASTM D4633 for dynamic analysis of driven piles or other accepted procedure. In general, hammers should be tested annually, and may be tested on a project specific basis if deemed necessary and staff are available to do the testing. Measured hammer efficiencies for WSDOT drilling equipment can be obtained by contacting the WSDOT Geotechnical Office.

3-6 References

Mayne, P. W., Christopher, B.R., and DeJong, J., 2002, *Subsurface Investigations – Geotechnical Site Characterization*, Publication No. FHWA NHI-01-031, National Highway Institute, Federal Highway Administration, Washington, DC, 300 pp.

3-7 Appendices

Appendix 3-A	Daily Drill Report Form
Appendix 3-B	Portable Penetrometer Test Procedures
Appendix 3-C	Field Investigation Best Management Practices for Erosion and Spill Prevention
Appendix 3-D	Department of Natural Resources Memorandum of Understanding: Drilling Operations – State Owned Aquatic Lands
Appendix 3-E	Geotechnical Field Investigation and Contaminated Drilling Waste Management Procedures
Appendix 3-F	State Materials Laboratory Sample- Handling Policy for Contaminated and Potentially Contaminated Samples
Appendix 3-G	WSDOT Well Tracking Database Information to be Tracked

Appendix 3-A Daily Drill Report Form

Washington State Department of Transportation

Daily Drill Report

SR	CS	Date
Project		Project No.
Drill		Drill No.

☐ Structure ☐ Line ☐ Landslide ☐ Materials Source

Hole No	Size	Angle	From	To	Soil	Rock	Total

Item	Hours	Item	Hours
Mobilization and Demobilization		Water Haul: Mileage	
On Site Moving/Rigging		Equipment Downtime Explain:	
Drill Site Preparation			
Soil Drilling		Standby for Hole Survey and Other Delays Explain:	
Rock Drilling			
Reaming Hole		Installation of Instrumentation Type:	
Placing and Removing Casing			
Hole Stabilization		Special Testing Type:	
Install and Maintain Water System			
Water Delay		Travel Time	

Expendables

Core Boxes	Piezo Pipe	Slope Incl	Cement	Bentonite	Additives

Other

Support Equipment	No.	Job	Yard	O Serv.

Remarks

	Reg.	OT	Comp	Total
Inspector				0
Driller				0
Helper				0

Shift Start	Shift Finish	Service Codes

DOT Form 350-152
Revised 07/2012

Appendix 3-B Portable Penetrometer Test Procedures

Background

The WSDOT portable penetrometer (PP) is a field test used in highway and small foundation design. The test may be used in both cohesive (clay) and cohesionless (sands & gravels) soils. The test values (i.e., blow count per foot of penetration) are dependent upon the effective overburden pressure of granular soils and shear strength of cohesionless soils. However, since all equations and correlations related to use of blow count values are approximate, sound engineering judgment is necessary for accurate interpretation of the test results.

The PP test is a derivative of the Standard Penetration Test (SPT), the most widely used method for determining soil conditions in the world. The SPT is both a dynamic penetration test and a method of obtaining disturbed samples. For the SPT test, a split-spoon sampler attached to drill steel is driven downward by the impact of a falling weight on the steel. In the SPT test, a 140 lb. weight falls a distance of 30 inches per blow. In the PP test method, a 35 lb weight falls an approximate distance of 25.5 inches. In the SPT test, as a split-spoon sampler is driven downward, it fills with disturbed soil. In the PP test, no sample is obtained as a solid, cone-shaped tip is driven downward by a falling weight. However, the PP method requires excavation of a test hole, and samples should be obtained with each change in soil strata.

Equipment

Performance of portable penetrometer testing requires two groups of equipment. The first group is associated with preparation of a drilled borehole, backhoe test pit, or hand-excavated test hole. This group includes the tools used to dig the hole, with a hand auger employed most frequently in a PP test application. A list of equipment used for excavation of a test hole with a hand auger follows:

- Shovel with pointed end for breaking up turf and vegetation at the surface.
- Posthole digger for assistance in establishing the test hole excavated using the hand auger.
- Hand auger to include: auger, pipe extensions (± 3 feet lengths), and handle.
- Steel bar to loosen up hard pack soil and assist in the removal of rock or gravel from the test hole.
- Tarp for collecting representative samples of soil strata.
- Field notebook and pencil for recording location of test holes, numbers and descriptions of distinct soil layers encountered, and other information relative to a review of site characteristics and conditions.
- Sample bags with ties for preservation of samples of material encountered with changes of soil strata.
- Marker for writing on sample bags or tags to delineate test hole and depth of sample collection.
- Pocket or rag tape to be used to locate the test hole relative to some reference point, grid, or proposed alignment and for measurement of depth below surface of distinct soil strata and depth of exploration.

The PP device and accessories form the second group of equipment required for geotechnical investigation of proposed highway or small foundation designs. A list of the equipment necessary for this group follows:

- Portable penetrometer to include cone-shaped tip; drill rod sections (A-rod - 1.75 in. pipe OD & 22.5 in. lengths); falling weight section (length of bar for sliding weight up and down); the 35-lb weight; and the coupling devices used for connecting the tip – drill rod sections – falling weight section – falling weight stop.
- Pipe wrenches (2) used to loosen connections when breaking down the portable penetrometer.
- Lathe or another “straight-edge” useful for establishing a surface reference elevation.
- Construction crayon or marker used for marking three 6 inch intervals on the penetrometer in order to clearly delineate displacement as the penetrometer is driven into the ground.
- Rags to wipe down equipment, removing moisture and dirt, prior to packing away equipment.

Test Procedure

1. Using a shovel or other hand tool, strip away sod or surface vegetation and set aside for future restoration of the location. Using a posthole digger or a 6 in diameter or greater hand auger, dig down approximately 2 feet, noting the depth of topsoil, subsoil, and other changes in soil strata. Describe soil conditions such as color, texture, and moisture content of the soils encountered in the bore log. Collect samples for lab soil classification, grain size determination, or Atterberg limits determination.
2. Assemble the PP device for evaluation of soils near the surface. Use threaded coupling devices to connect the cone-shaped tip, drill rod sections, and falling weight slide section.
3. Measure the distance from the bottom of the test hole to the surface and record. From the tip of the penetrometer, measure this distance on the body of the testing device and annotate a reference line on the body of the device. From this line measure and mark three intervals, each 6 inches in length.
4. Lift up the PP device and place the tip at the bottom of the test hole. Insure that the bottom or base line mark lines up with the approximate ground surface. Place a lathe or other straight edge on the ground surface so that any downward displacement of the PP device may be measured accurately.
5. Lift the 35 lb weight up and lower it down on to the upper, slide portion of the testing device. Screw on the threaded stop at the upper end of the slide section.

6. Performance of PP testing requires a minimum of two people. One person should be responsible for steadying the PP device in the test hole, counting the number of times the weight drops, and watching the reference line in order to stop the process every time the device is displaced downward a total of 6 inches. The second person is responsible for raising and dropping the weight in as smooth and controlled manner as possible. Raising the weight upward of fifty times per 6 inch interval can prove to be a workout. Additional personnel can be employed to relieve the person responsible for lifting the weight and assist in the manual work requirements of test hole excavation.
7. For each "blow", the 35 lb weight drops a distance of approximately 25.5 in. The number of blows required to drive the cone penetrometer through three 6 inch intervals is recorded. The count for the initial 6 inch interval is noted but isn't used to compute a test value because it reflects the seating of the PP device. The sum of the blows for the last two 6 inch intervals is recorded. This sum of the blows represents the blow count for that 1 foot interval below the surface.
8. Upon completion of PP testing at a specific depth, the device is unseated by thrusting the weight against the stop at the end of the slide. Repeating this action should loosen the tip and permit removal of the device from the test hole.
9. Employ the hand auger to remove material "disturbed" by the action of the PP. Place this affected material on the tarp and obtain a sample for lab testing. Associate PP test results with material sampled from the proper test hole and elevation.
10. Continue advancing the auger into the soil, emptying soil and repeating the procedure until the desired depth is reached. Advances from one PP test to the next lower level test are usually in 2 feet increments. Monitor the condition and properties of the soil, noting any changes in strata. Obtain samples as necessary.
11. To prepare the PP device for the next test at a lower test hole level, remove the weight stop, 35 1b weight, and slide section to permit the attachment of additional drill rod sections. Re-attach the slide section to the penetrometer. Measure the distance from the bottom of the test hole to the surface. Mark this distance on the body of the testing device by measuring from the tip and annotating a base line corresponding to the distance on the PP device.
12. With assistance, lift the PP into the test hole, properly seat it in the center of the hole, and insure that the base line corresponds with the ground surface.
13. Lift the weight up and onto the slide section and screw in the threaded stop at the top end of the slide.
14. Perform PP test procedure and sampling as described previously.
15. Monitor changes in soil strata as the hand auger advances downward in the test hole. In general, sample only when there are obvious changes in soil strata. Use engineering judgment to guide whether additional sampling and testing are warranted. As the degree of geologic complexity increases, the degree of sampling and testing increases as well.

Figures 3-B-1 through 3-B-8 illustrate the equipment and procedures used for conducting the Portable Penetrometer test.

Figure 3-B-1



Perform a field reconnaissance of the site of the geotechnical investigation. Insure that the proposed design is tied to an established coordinate system, datum, or permanent monument.

Figure 3-B-2



Hand augers used in conjunction with the PP test.

Figure 3-B-3



Porta-Pen equipment. Clockwise from the top left: tape measure above cone-shaped tips (2); 22.5-inch lengths (9); threaded coupling devices used to connect PP components (10); threaded coupler used to stop weight (1); falling-weight slide section above pipe wrenches (2); 35 lb. weight; and threaded coupling devices used with small cone tips (not shown).

Figure 3-B-4



The vicinity of the test hole is cleared of vegetation using a shovel or posthole digger. Left photo shows using the auger to advance the hole to the desired depth. Right photo shows placing soil on the tarp prior to sampling.

Figure 3-B-5



Photo of PP device in the process of being assembled. The threaded coupling devices on the left side of the box are used to connect the cone-shaped tip to lengths forming the body of the penetrometer. The lengths forming the body of the penetrometer are then connected to the section on which the weight slides.

Figure 3-B-6



Marking a base line on the body of the penetrometer. This will line up with the top of the test hole. In addition, also mark three 6 inch intervals, measured from this base line, to track the downward displacement when the falling weight is applied.

Figure 3-B-7



PP testing in progress. Lathe is used to mark the surface of the test hole excavation. In this instance, one person is steadying the equipment, another is lifting and dropping the 35 lb weight, and a third is observing downward displacement and counting blows.

Figure 3-B-8



This PP testing can be tiring. Photo shows another person providing relief for the falling weight task.

Appendix 3-C Field Investigation Best Management Practices for Erosion and Spill Prevention

The Washington State Department of Transportation (WSDOT) is dedicated to protecting the environment when conducting field exploration projects. This memo outlines the erosion/sediment control and spill prevention best management practices (BMPs) that will be followed for all drilling activities.

The two distinct scenarios for drilling include pavement and vegetated areas. The variety of erosion and sediment control BMPs may vary between the two scenarios, but the philosophy of minimizing site disturbance, reducing waste materials, trapping sediment, and stabilizing the site, remains the same.

Disturbance Minimizing BMPs:

- Select the smallest rig capable for the job
- Use elevated scaffolding for driller and assistant when necessary

Waste Reduction BMPs:

- Re-circulate drilling slurry
- Minimize volume of water for drilling

Sediment Trapping BMPs:

- Baffled mud tub (sealed with bentonite to prevent fluid loss)
- Polyacrylamide (PAM) for flocculation (must meet ANSI/NSF Standard 60)
- Silt fence (trenched, below drill, and on contour)
- Sand bag barrier (washed gravel, below drill, two rows high, and on contour)
- Straw bale barrier (trenched, staked, below drill, and on contour)
- Catch basin insert (pre-fabricated type, above or below grate)
- Storage of slurry in locked drums

Site Stabilization BMPs:

- Seed with pasture grass
- Straw mulch (2” maximum for seeded areas)

All BMPs will be installed and a thorough inspection for sensitive areas (wetlands, streams, aquifer recharge, etc.) and stormwater conveyances will be conducted, prior to starting drilling activities. At no time shall drilling slurry or cuttings be allowed to enter Water Bodies of the State of Washington.

When sensitive resources or conveyances to these areas exist, all slurry and cuttings will be stored in lockable drums and disposed of off-site. If not, the slurry will slowly be infiltrated into the ground using surrounding vegetated areas and the cuttings will be stored and disposed of off-site.

Removal of sediment control BMPs will be performed immediately after drilling is completed. Place trapped sediment with cuttings in drums. If significant soil disturbance occurs during drilling, the BMPs will be left in place until the site is stabilized with grass or mulch.

The drill crew will have a copy of the HPA, issued by WDFW on-site for all work adjacent to or over water. The General HPAs are available on the HPA webpage (https://wsdot.wa.gov/environment/technical/permits-approvals/hydraulic-project-approval). The Supervisor will discuss the HPA permit provision requirements with the crew prior to each project, which include BMPs to protect fish habitat, water quality, and riparian vegetation. All of the provisions in each HPA will be strictly followed until the completion of said project. The previously defined erosion/ sediment control philosophy and BMPs will be implemented in these conditions

The approach to protecting surface and ground water is focused on prevention. The drill shaft will be filled with bentonite clay to prevent mixing of aquifers and eliminating the route for surface contaminants. In addition, the following Spill Prevention Control & Countermeasures (SPCC) BMPs will be used when applicable:

Minimize Risk:

- Visually inspect equipment for leaks or worn hoses on a daily basis
- Fix equipment leaks as soon as possible to minimize cleanup
- Use proper equipment to transfer materials
- Reduce the overall volume of fuel and chemicals on site
- Remove as many sources of spills as possible from the site when not working (evenings/weekends)
- Use environmentally-friendly chemicals whenever possible
- Store all chemicals with lids closed and keep containers under cover
- Have secondary containment devices underneath potential spill sources when applicable (e.g. 5 gallon bucket)

Maximize Response:

- Each drilling operation will have at least one emergency spill response kit on site at all times
- Know who to call in case of emergency spill

If an incidental spill (less than 1 gallon/small equipment leak) occurs, immediately collect contaminated soil and store it in label storage drum. Do not mix soils with different contaminants together. Report spill to your supervisor, as they are aware of reporting requirements.

If a major spill (more than 1 gallon) to water occurs, control the source of the leak if possible and contact the Washington State Emergency Management Division (800-258-5990) and the National Response Center (800-424-8802). If a major spill to soil occurs and there is immediate risk to human health and/or the environment, control the source of the leak if possible and contact Ecology (800-407-7170). Then contact your supervisor, as they are aware of reporting requirements.

Appendix 3-D Department of Natural Resources Memorandum of Understanding: Drilling Operations – State Owned Aquatic Lands

WASHINGTON STATE DEPARTMENT OF
Natural Resources
Peter Goldmark - Commissioner of Public Lands

STATE OF WASHINGTON
DEPARTMENT OF NATURAL RESOURCES
PETER GOLDMARK, Commissioner of Public Lands

MEMORANDUM OF UNDERSTANDING

MOU No. 92-091209

This Memorandum of Understanding (MOU) is between the State of Washington, acting through its Department of Natural Resources, referred to as DNR, and the State of Washington, acting through its Department of Transportation, referred to as WSDOT.

The DNR is entering into this Agreement under authority of Chapter 39.34 RCW of Washington State, Interlocal Cooperation Act.

The DNR is the steward of 2.6 million acres of state-owned aquatic lands. DNR manages the aquatic lands beneath Puget Sound, the coast, navigable rivers and lakes to encourage direct public use and access, foster water dependent uses, ensure environmental protection, and to utilize renewable resources.

The WSDOT is responsible to keep people and business moving by operating and improving the state's transportation system vital to our taxpayers and communities. A key institutional linkage between DNR and WSDOT is a mandate to ensure environmental protection.

This MOU formally recognizes the connection between marine and freshwater sediment test drilling and State Owned Aquatic Lands habitat function, and it increases coordination between the DNR aquatic lands leasing and WSDOT Geotechnical Services Division programs. This MOU defines a streamlined process for DNR to authorize WSDOT access to state-owned aquatic land for the purposes of temporarily installing test drilling equipment and collecting geotechnical survey data. This increased coordination and streamlined process will result in better environmental protection of State Owned Aquatic Lands at a cost savings to the state.

We agree to the provisions and statements outlined below.

1.01 Definitions.

DNR – an agency of the state of Washington

WSDOT – an agency of the state of Washington

Memorandum of Understanding - The DNR and WSDOT enter into this memorandum of understanding, in good faith, to collaborate on and/or coordinate programs, and to define institutional linkages along broad areas of concern. Memoranda of understanding are not legal contracts and do not strictly obligate the resources of the Department.

Drilling operations may consist of several different types of drilling methods and equipment such as portable aluminum pontoon barge with a skid mounted drill. The ultimate goal is to collect geotechnical data necessary to determine the sub-surface composition for the purpose of structure and roadway design. This memorandum of understanding applies only to work that is conducted consistent with the activities described in Exhibit A. Any work proposed to be conducted on State Owned Aquatic Lands that is outside of the activities described in Exhibit A will require the submission of a completed application for use authorization and possibly a separate use authorization before access to State Owned Aquatic Lands is granted.

Access to State Owned Aquatic Lands – After satisfying all the procedural requirements triggered by this type of work and securing all other applicable federal, state and local permits, and receiving written confirmation that no conflicts exist with aquatic habitats, sediment contamination, navigation and public access, or any prior rights granted on State Owned Aquatic Lands at a proposed drilling site, WSDOT is granted access to State Owned Aquatic Lands for the purpose of temporarily installing marine and freshwater sediment test drilling equipment to collect geotechnical data. In authorizing access to WSDOT for this specific purpose, DNR conveys no rights in property. Access to State Owned Aquatic Lands may be revoked by DNR with thirty (30) day notice to WSDOT.

2.01 Objectives.

- Create a formal cooperative agreement between DNR and WSDOT that encourages joint planning and operations in support of the WSDOT's Field Exploration Unit.
- Create a streamlined process to grant WSDOT access to State Owned Aquatic Lands for the purpose of installing marine or freshwater sediment test drilling equipment and collecting geotechnical data while ensuring environmental protection of State Owned Aquatic Lands.
- Build collaboration between DNR and WSDOT that will establish a forum for communication regarding geotechnical surveys.

3.01 Work Activities.

See Attachment A

4.01 Functions/Roles/Tasks of Agencies/Parties.

DNR shall:

- Review WSDOT proposed sediment test drilling work descriptions and locations for potential conflicts on State Owned Aquatic Lands and consistency with activities described in Exhibit A.
- Provide written notification to WSDOT granting or denying access to State Owned Aquatic Lands for temporarily installing marine and freshwater sediment test drilling equipment to collect geotechnical. Written notification will be provided to WSDOT via email or fax, within fifteen (15) working days of receipt of notice of any proposed work. Written DNR approval does not exempt WSDOT from regulatory permits.
- Maintain communication with WSDOT regarding marine and freshwater sediment test drilling results on State Owned Aquatic Lands.

WSDOT shall:

- Contact DNR at least thirty (30) days before installing drilling devices with a description and anticipated duration of the proposed work and a description of the location in the form of a vicinity map depicting Section, Township, Range and accompanying GPS coordinates. WSDOT will not proceed with the proposed work until receiving written confirmation from the DNR project coordinator that there are no conflicts after and obtaining and fulfilling all other local, state, and federal permits and permit requirements.
- Maintain communication with DNR regarding marine and freshwater sediment test drilling results and implications to potential management activities on State Owned Aquatic Lands.
- Upon request, provide to DNR all sediment quality results and any other data, results, conclusions or findings WSDOT obtains from any of the work completed under this MOU.

5.01 Terms and Conditions.

(1) Effective Dates. This MOU is effective between May 1, 2014 and May 1, 2019. This agreement will be reviewed every two years.

(2) Amendments. This MOU shall be amended only by written mutual consent of the

(2) Amendments. This MOU shall be amended only by written mutual consent of the parties.

(3) Termination. Either party may terminate this MOU by notifying the other party, at the addresses given, of the termination and specifying the termination date. The terminating party shall deliver the notice at least fifteen (15) days prior to the termination date.

6.01 Project Coordinators.

(1) The Project Coordinator for the DNR is Linda Farr, Telephone Number (360) 902-1065.

(2) The Project Manager for the WSDOT is Cyndi Booze, Property & Acquisition Specialist, Telephone Number (360) 705-7377.

STATE OF WASHINGTON
DEPARTMENT OF TRANSPORTATION

Dated: 5-19, 2014

By: _____

Title: Acquisition Prog. Mgr

Address: PO Box 47338, Olympia WA 98504

Phone: 360-705-7312

STATE OF WASHINGTON
DEPARTMENT OF NATURAL RESOURCES

Dated: 5/21, 2014

By: _____

Title: AQR Division Manager

Address: PO Box 47027, Olympia WA 98504-7027

Attachment A

WORK ACTIVITIES

Habitat Stewardship Measures and Best Management Practices:

(1) Species work windows will be used for the timing of any in-water construction and operational activities. This includes protection of forage fish, forage fish spawn, and associated spawning areas, as applicable.

(2) Avoid impacts to aquatic vegetation and fish spawning habitat/vulnerable life history stages. WSDOT will avoid drilling in Puget Sound eelgrass beds.

(i) Fuels and other toxic materials must be stored in a location where they do not pose a risk of contaminating intertidal or nearshore areas.

1. Maintaining pumps, boat motors, and other equipment in good condition, without leaks.
2. Storing equipment free of fuel or in secure containment areas where any accidental leaks will be contained.
3. Containing and cleaning up spills of fuels or other fluids without delay. Absorbent materials must be available onsite for this purpose.
4. Removing broken-down vehicles promptly from beaches and intertidal areas.

(3) Floating structures and boats must not rest on the substrate. Boat moorage systems must be deployed in a manner that prevents dragging of the vessel or line. NOTE: When drilling location is in a confirmed forage fish spawning beach area, either use of the portable or large barge method is required for sediment test drilling and geotechnical surveys. However, deployment needs to be from a designated boat launch or beach void of suitable forage fish spawning habitat. Only in areas where successful avoidance of forage fish, their spawn and associated spawning areas is achieved, can other methods be deployed (i.e., truck or track mounted drill).

After satisfying all requirements triggered by this type of work, the WSDOT project coordinator will provide a description and anticipated duration of the proposed work and a description of the location in the form of a vicinity map depicting Section, Township, Range and accompanying GPS coordinates to the DNR project coordinator. The DNR project coordinator will review these proposals for potential conflicts on State Owned Aquatic Lands and provide written notification to the WSDOT project coordinator within 15 days granting access to State Owned Aquatic Lands for the sole purpose of conducting marine and freshwater sediment testing activities. WSDOT projects the length of time at each location to be approximately 1-60 days.

Marine and freshwater sediment test drilling and geotechnical surveys are necessary to determine the sub-surface composition for the purpose of structure and roadway design, hazardous materials detection, and other information necessary in the design roadway structures such as bridges.

WSDOT sampling procedure is as follows:

A 4 inch casing is sealed into the lake or river bottom. The test boring is advanced through that casing with a 3 inch casing. At every 5 foot interval a split spoon sampler is lowered on a 2 1/4 inch rod through the 3 inch casing to the bottom of the hole for taking soil samples. This process is repeated to the required depth of the soil investigation.

TRUCK MOUNTED DRILL
The truck mounted drill will access boring locations that are on relatively flat, easy to access sites. Each drill will have a support truck for water, tooling, and other required supplies.

TRACK MOUNTED DRILL
The track mounted drill is a low ground pressure (2.5 pounds per square inch rubber and steel track vehicle). It is used to access soft ground areas and sites with uneven or rough terrain. Each drill will have a support truck for water, tooling, and other required supplies.

PORTABLE BARGE
The Portable Barge is used when access is needed to an area within the waterbody where none of the above methods will work. It consists of hauling transportable pontoons to the vicinity by trailer and setting them into the water with a boom truck for assembly into a barge. Drills and support equipment are placed on the barge on moved into position for the drilling operation. The barge is held in place by four anchors.

For operations in deep water, a truck mounted drill is placed on a large barge rented. Tug boats are used to maneuver the barge.

CONE PENETROMETER TEST TRUCK
The Cone Penetrometer test truck is used to send sound waves into the ground to determine the density of material underground. It use an electronic instrumented cone assembly, hollow core sounding rods, a 20 ton hydraulic thrust frame, and a computer data acquisition/processing system to perform the analysis. This is a self-contained unit mounted on a truck. The system can be used from a barge for testing when there is deep soft sediment.

Appendix 3-E Geotechnical Field Investigation and Contaminated Drilling Waste Management Procedures

Requirements for handling, storage, and disposal of hazardous materials encountered during geotechnical drilling are provided at the following website: https://wsdot.wa.gov/environment/technical/disciplines/hazardous-materials/investigation-sampling-document

Appendix 3-F State Materials Laboratory Sample-Handling Policy for Contaminated and Potentially Contaminated Samples

On a project level, if any contaminated sites are brought to the attention of the (GPM), he/she shall immediately notify and forward all contaminant information to the Structural Materials Testing Engineer (SMTE) of the State Materials Laboratory (SML) and the Field Exploration Manager (FEM). Similarly, if the FEM, FE Supervisor, or FE crew is made aware of or suspects the presence of contaminants on a project, they shall immediately notify the GPM and the SMTE. This information shall include the project number, project name, location, boring (if applicable), and the types and scale of the contamination.

The SMTE shall pass this information to the SML geotechnical lab employees. Three situations are anticipated with regard to contaminated or potentially contaminated samples. The sample handling and disposal protocol applicable to the situation shall be followed. These situations, and the protocols associated with those situations, are described in the sections that follow.

Situation 1: Contaminated Soils Encountered in the Field

Soils (or rock) encountered in the field known or suspected to be contaminated shall not be submitted to the lab for standard sample processing and testing. In the event suspected or known contaminated soils/rock are encountered in the field, the following protocol shall be followed:

1. The FE crew shall immediately stop drilling/sampling operations and call the FEM, Supervisor and GPM for direction.
2. The FEM and/or GPM shall then contact the Environmental Services Office (ESO) for direction.
3. Utilizing appropriate PPE, any samples suspected or known to be contaminated shall be marked as contaminated and placed in the contaminated holding area or drum, as directed by the ESO. Labeling should be in the form of a single (~4”) strip of black and yellow striped tape and be placed on all samples (across the baggie, or over the cap of a Shelby tube). All drill cuttings and fluids from the boring shall also be placed in sealed drums. All samples from a suspected contaminated boring should be kept together until they have been cleared for testing.
4. If the ESO determines that a suitable secure and offsite storage area is not available or not necessary, they may direct the suspected/known contaminated materials to be transported to the SML for disposal characterization. The FEM or GPM shall then notify the SMTE that suspected/known contaminated samples are being transported to the SML.
5. The FEM shall establish a secure area outside of the main SML building, where the FE crew shall place the samples while they await disposal characterization by the ESO. The FEM shall then notify the ESO of the receipt of samples and request their direction on disposition.

6. Once analytical test results have been obtained, the ESO will direct the soil/rock samples and cuttings to be disposed of properly (protocols for what this entails shall be provided by the ESO) or make them available for geotechnical testing if contamination test(s) indicate they are suitable for geotechnical testing.
7. The samples shall not have geotechnical testing performed on them without being cleared to be tested by the ESO and Safety Office. The ESO/Safety Office shall determine the appropriate safety level for any subsequent testing/handling to be performed by SML employees. It is understood that at this time, only soils/rock not exceeding regulatory cleanup levels, and that have been cleared by the ESO Office, shall be suitable for geotechnical testing to be performed at the SML. Samples not cleared for testing at the SML should not enter the building.
8. Samples cleared for geotechnical testing by the ESO/Safety Office shall be labelled with additional green tape prior to delivery to the SML, indicating that the samples have been cleared for testing but extra precaution should be used. The black and yellow tape shall remain on the samples.

Situation 2: Screened Samples - Known Contaminants Exist in a Boring, but Samples are Screened in the Field and Deemed Safe for Geotechnical Testing

1. All samples from a contaminated boring should be kept together until they have been cleared for testing.
2. Upon direction from the ESO, samples that have been retained at a secure offsite location and confirmed to not exceed regulatory cleanup levels through analytical testing may be transmitted to the SML for geotechnical testing. Prior to transmitting the samples to the SML for geotechnical testing, the ESO shall notify the FEM, who in turn will notify the GPM and SMTE, that the soil samples are marginally contaminated and that they may be safely processed for geotechnical testing using appropriate PPE.
3. All such contaminated samples shall be properly labeled before being taken to the SML.
4. Labeling should be in the form of a single (~4”) strip of green tape placed on all samples (across the baggie, core box, or over the cap of a Shelby tube), indicating that the sample has been cleared for testing but extra precaution should be used.
5. All lab employees handling such marked samples shall use proper PPE and be at a heightened awareness for the possibility of contaminants to exist in these samples.
6. PPE for marginally contaminated materials includes latex/rubber gloves, eye protection, and other equipment or handling methods as deemed necessary by the ESO (which will vary based on the types of contaminants encountered).
7. Once cleared samples have been tested by the SML Soils Lab, at the direction of the GPM they may be disposed of in the same manner as non-contaminated soils.

Situation 3: Unexpected Contaminated Samples Discovered in the SML

If samples inadvertently make it to the SML that are suspected by lab personnel to be contaminated, lab personnel shall immediately secure all samples from the entire boring in an airtight container, label the container as having suspected contaminated samples, and notify the SMTE and the FEM, who shall then contact the ESO for direction.

If any tests have been performed on a sample and contamination is suspected after the fact, the SMTE and FEM should be notified immediately to determine how to proceed. Any equipment that came into contact with the contaminated sample should be identified and addressed (segregated, cleaned) according to ESO recommendations.

Detailing proper disposal for samples determined by ESO to be contaminated and not suitable for geotechnical testing is deemed outside the scope of this protocol. The ESO will convey the disposal requirements to the FEM or, in his absence, the FE Supervisors, and the FE personnel shall follow those disposal procedures accordingly.

Appendix 3-G WSDOT Well Tracking Database Information to be Tracked

Table 3-G-1 Well Data to be Tracked.

Field Name	Definition
WellTrackingDetail ID	An auto incremented number that serves as the primary key for the WellTrackingDetail table.
ECYRegionName	Ecology Region Name
WSDOTRegionName	The textual description of the geographic and administrative areas of responsibility of the Washington State Department of Transportation within the State of Washington as described in the Chart Of Accounts.
COUNTY	The name of a political and administrative division of a state, providing certain local governmental services. This name does not include the word 'County'.
ControlSectionNumber	A code that identifies a location, either a Roadway Segment, state owned facility or Ferry, established for the purpose of tracking project costs with the location's associated tax base.
TownshipNumber	The numeric designation that identifies a unit of survey of the public lands. Townships run north and south. In Washington Township numbers range from 1 north in Clark and Skamania counties to 40 North across our northern border: 1N-41N
RangeNumber	Ranges run east and west and Range numbers go from 16 West in Clallam County to 45 East along the Idaho border: 1E-47E or 1W-16W
SectionNumber	The full designation of a location based on the US Public Land Survey System in the format of Township, Township Direction, Range, Range Direction, Section. Each Township is divided into a grid of 36 sections. Each section is approximately 1 mile square. About 5% of the townships use section numbers greater than 36 (37-50).
SectionQuarter	Each section is divided into four 1/4 sections. They are defined by their quadrant name. NW - Northwest quadrant NE - the Northeast quadrant SW - the Southwest quadrant SE - the Southeast quadrant.
SectionQuarterQuarter	Each Quarter is divided into four 40-acre parts called a Quarter-Quarter. They are defined by their quadrant name. NW is for the Northwest quadrant of the Northwest quadrant, NE for the Northeast quadrant of the Northeast quadrant, SW for the Southwest quadrant of the Southwest quadrant, and SE for the Southeast quadrant of the Southeast quadrant.
DrillerFirstName	The first name of a WA State licensed well operator
DrillerLastName	The last name of a WA State licensed well operator

Table 3-G-1 Well Data to be Tracked.

Field Name	Definition
DrillerLicenseNumber	Alfa numeric License number driller is required to be licensed with the Washington state Department of Ecology to provide well construction
DecommissionCardNumber	Decommission Card Number - NOI number for a well decommission
DecommissionLicenseNumber	Alfa numeric License number driller is required to be licensed with the Washington state Department of Ecology to provide well decomission
WorkOrderNumber	The number that identifies the central collection point or cost center for managing costs associated with projects. It identifies a written order authorizing work to be performed on a Work Item Phase. It is the first 6 characters of the Job Number.
WorkOrderDescription	The title of the Work Order authorizing work to be accomplished on the Work Item. This field is reporting from TRAINS and cannot be modified in CPMS.
Phase	Phase
Group	Group
StateRouteNumber	The Number assigned to the State Route and enacted into law

Chapter 4 Soil and Rock Classification and Logging

4.1 Overview

The detailed description and classification of soil and rock are an essential part of the geologic interpretation process and the geotechnical information developed to support design and construction. The description and classification of soil and rock includes consideration of the physical characteristics and engineering properties of the material. The soil and rock descriptions that are contained on the field logs should be based on factual information. Interpretive information *should not* be included on the field logs, but provided elsewhere, such as in the text of geological, and geotechnical reports. This chapter provides standards for describing and logging soil and rock.

The Unified Soil Classification System, as outlined in ASTM 2488 – "Standard Practices for Description of Soils (Visual – Manual Procedure)", provides a conventional system for classifying soils. However, it alone does not provide adequate descriptive terminology and criteria for identifying soils for engineering purposes. Therefore, the ASTM Standard has been modified to account for these additional descriptive terms and criteria. It is not intended to replace the standard but to improve upon it, and make it better understood.

There are numerous rock classification systems, but none of these is universally used. This chapter provides a composite of those classification systems that incorporates the significant descriptive terminology relevant to geotechnical design and construction.

An important facet of soil and rock classification is the determination of what constitutes *"rock"*, as opposed to extremely weathered, partially cemented, or altered material that approaches soil in its character and engineering characteristics. Extremely soft or decomposed rock that is friable (easily crumbled), and can be reduced to gravel size or smaller by normal hand pressure, should be classified as a soil.

4.2 Soil Classification

Soil classification, for engineering purposes, is based on the *distribution* and *behavior* of the fine-grained and coarse-grained soil constituents. Soil descriptions that are contained on the field exploration logs are based on *modified* procedures as outlined in ASTM 2488. The visual - manual procedure provided in this standard utilizes visual observation and simple field index tests to identify the characteristics of the soil constituents. Definitions for the various soil constituents can be found in Table 4-1. In addition, soil properties that address angularity, consistency/relative density, color, moisture, structure, etc. have been defined.

Soils are divided into four broad categories. These soil categories are coarse-grained soils, fine-grained inorganic soils, organic soils, and peat. The first step in identifying soil is to make a determination regarding which of the four broad categories the soil belongs. The definitions for these broad categories are as follows:

- Coarse Grained Soils: Soils that contain 50 % or less of soil particles passing a 0.0030 in. (0.075 mm) opening.

- Fine Grained Inorganic Soils: Soils that contain more than 50 % of soil particles passing a 0.0030 in. (0.075 mm) opening.
- Fine Grained Organic Soils: Soils that contain enough organic particles to influence the soil properties.
- Peat: Soils that are composed primarily of vegetative tissue in various stages of decomposition that has a fibrous to amorphous texture, usually dark brown to black, and an organic odor are designated as a highly organic soil called peat. Once a soil has been identified as a peat (group symbol **PT**), the soil should not be subjected to any further identification procedures.

Soil Constituent	Description
Boulder	Particles of rock that will not pass through a 12 in. opening.
Cobble	Particles of rock that will pass through a 12 in. opening, but will not pass through a 3 in. opening.
Gravel	Particles of rock that will pass through a 3 in. opening, but will not pass a 0.19 in. (4.75 mm) opening.
Sand	Particles of rock that will pass through a 0.19 in. (4.75 mm) opening, but will not pass a 0.003 in. (0.075 mm) opening.
Silt	Soil that will pass through a 0.003 in. (0.075 mm) opening that is *non-plastic* or very slightly plastic and exhibits *little or no strength* when air-dried.
Clay	Soil that will pass through a 0.003 in. (0.075 mm) opening that can be made to exhibit *plasticity* (putty-like properties) within a range of water contents, and exhibits *considerable strength* when air-dried.
Organic Soil	Soil that contains enough organic particles to influence the soil properties.
Peat	Soil that is composed primarily of vegetable tissue in various stages of decomposition usually with an organic odor, a dark brown to black color, a spongy consistency, and a texture ranging from fibrous to amorphous.

Soil Constituent Definition
Table 4-1

4.2.1 Coarse Grained Soils

Coarse grained soils are classified as either a gravel or a sand, depending on whether or not the percentage of the coarse grains are larger or smaller than a 0.19 in. (4.75 mm) opening. A soil is defined as a ***gravel*** when the estimated percentage of the gravel size particles is greater than the sand size particles. A soil is defined as a ***sand*** when the estimated percentage of the sand size particles are greater than the gravel size particles.

If the soil is classified as a gravel, it is then identified as either clean or dirty. *Dirty* means that the gravel contains an appreciable (greater than 10 %) amount of material that passes a 0.003 in. (0.075 mm) opening (fines), and *clean* means that the gravel is essentially free of fines (less than 10 %). The use of the terms clean and dirty are for distinction purposes only and *should not* be utilized in the description contained on the field log.

If the gravel is *clean* then gradation criteria apply, and the gravel is classified as either well graded (GW) or poorly graded (GP). *Well graded* is defined as a soil that has a wide range of particle sizes and a substantial amount of the intermediate particle sizes. *Poorly graded* is defined as a soil that consists predominately of one particle size (uniformly graded), or has a wide range of particle sizes with some sizes obviously missing (gap graded). Once the grading determination has been made, the classification can be further refined by estimating the percentage of the sand size particles present in the sample.

If the gravel is *dirty* then it will be important to determine whether the fines are either silt or clay. If the fines are determined to be *silt* then the gravel will be classified as a silty gravel (GM). If the fines are determined to be *clay* then the gravel will be classified as a clayey gravel (GC). Once the determination has been made whether the fines are silt or clay, the classification can be further refined by estimating the percentage of sand size particles present in the sample.

If the soil is classified as a sand, the same criteria that were applied to gravels are used - clean or dirty. If the sand is *clean*, the gradation a criterion is examined in terms of well-graded sand (SW) versus poorly graded sand (SP). Once the grading determination has been made, the classification can be further refined by estimating the percentage of gravel size particles present in the sample. If the sand is *dirty*, then it will be important to determine whether the fines are silt or clay. If the fines are determined to be silt, then the sand will be classified as a silty sand (SM); conversely, if the fines are determined to be clay, then the sand will be classified as a clayey sand (SC). Once the determination has been made whether the fines are silt or clay the classification can be further refined by estimating the percentage of gravel size particles present in the sample. Table 4-2 should be used when identifying coarse grained soils.

The coarse-grained soil classification as outlined in Table 4-2 does not take into account the presence of cobbles and boulders within the soil mass. When cobbles and/or boulders are detected, either visually within a test pit or as indicated by drilling action/core recovery, they should be reported on the field logs after the main soil description. The descriptor to be used should be as follows:

with cobbles - when only cobbles are present

with boulders - when only boulders are present

with cobbles and boulders - when both cobbles and boulders are present

	Fines	Grading	Silt or Clay	Group Symbol	Sand or Gravel	Description
Gravel	<10%	Well Graded		GW	< 15% Sand	Well graded GRAVEL
	< 10%	Well Graded		GW	≥ 15% Sand	Well graded GRAVEL with sand
	< 10%	Poorly Graded		GP	< 15% Sand	Poorly graded GRAVEL
	< 10%	Poorly Graded		GP	≥ 15% Sand	Poorly graded GRAVEL with sand
	> 10%		Silt	GM	< 15% Sand	Silty GRAVEL
	> 10%		Silt	GM	≥ 15% Sand	Silty GRAVEL with sand
	> 10%		Clay	GP	< 15% Sand	Clayey GRAVEL
	> 10%		Clay	GP	≥ 15% Sand	Clayey GRAVEL with sand
Sand	< 10%	Well Graded		SW	< 15% Gravel	Well graded SAND
	< 10%	Well Graded		SW	≥ 15% Gravel	Well graded SAND with gravel
	< 10%	Poorly Graded		SP	< 15% Gravel	Poorly graded SAND
	< 10%	Poorly Graded		SP	≥ 15% Gravel	Poorly graded SAND with gravel
	> 10%		Silt	SM	< 15% Gravel	Silty SAND
	> 10%		Silt	SM	≥ 15% Gravel	Silty SAND with gravel
	> 10%		Clay	SC	< 15% Gravel	Clayey SAND
	> 10%		Clay	SC	≥ 15% Gravel	Clayey SAND with gravel

Field Description of Coarse Grained Soil Classification
Table 4-2

4.2.2 Fine-Grained Inorganic Soils

Fine-grained inorganic soils are classified into four basic groups based on physical characteristics of dry strength, dilatancy, toughness, and plasticity. These physical characteristics are summarized in Table 4-3. The index tests used to determine these physical characteristics are described in ASTM 2488. Soils that appear to be similar can be grouped together. To accomplish this, one sample is completely described, and the other samples in the group are identified as *similar* to the completely described sample.

When describing and identifying *similar* soil samples, it is generally not necessary to follow all of the procedures for index testing as outlined in ASTM 2488 for those samples.

Soil Group	Dry Strength	Dilantancy	Toughness	Plasticity
Silt (ML)	None to Low	Slow to Rapid	Low	Non-plastic
Elastic Silt (MH)	Low to Medium	None to Slow	Low to Medium	Low to Medium
Lean Clay (CL)	Medium to High	None to Slow	Medium	Medium
Fat Clay (CH)	High to Very High	None	High	High

Field Identification of Fine Grained Inorganic Soils
Table 4-3

Once the major soil group has been determined, fine grained inorganic soils can be further described by estimating the percentages of fines, sand and gravel contained in the field sample. Tables 4-4 through 4-7 should be used in describing fine-grained inorganic soils.

4.2.3 Organic Fine Grained Soils

If the soil contains enough organic particles to influence the soil properties, it should be identified as an organic fine-grained soil. Organic soils (OL/OH) usually have a dark brown to black color and may have an organic odor. Often, organic soils will change colors, for example black to brown, when exposed to the air. Organic soils will not have a high toughness or plasticity. The thread for the toughness test will be spongy. It will be difficult to differentiate between an organic silt and an organic clay. Once it has been determined that the soil is a organic fine grained soil, the soil can be further described by estimating the percentage of fines, sand, and gravel in the field sample. Table 4-8 should be used in describing an organic fine-grained soil.

Fines	Coarseness	Sand or Gravel	Description
> 70%	< 15% Plus 0.075 mm		SILT
> 70%	15 to 25 % Plus 0.075 mm	% Sand > % Gravel	SILT with Sand
> 70 %	15 to 25 % Plus 0.075 mm	% Sand < % Gravel	SILT with Gravel
< 70%	% Sand > % Gravel	< 15 % Gravel	Sandy SILT
< 70 %	% Sand > % Gravel	> 15% Gravel	Sandy SILT with gravel
< 70 %	% Sand < % Gravel	< 15 % Sand	Gravelly SILT
< 70 %	% Sand < % Gravel	> 15 % Sand	Gravelly SILT with Sand

Field Descriptions of Silt Group (ML) Soils
Table 4-4

Fines	Coarseness	Sand or Gravel	Description
> 70 %	< 15 % Plus 0.003 in. (0.075 mm)		Elastic SILT
> 70 %	15 to 25 % Plus 0.003 in. (0.075 mm)	% Sand > % Gravel	Elastic SILT with Sand
> 70 %	15 to 25 % Plus 0.003 in. (0.075 mm)	% Sand < % Gravel	Elastic SILT with Gravel
< 70 %	% Sand > % Gravel	< 15 % Gravel	Sandy Elastic SILT
< 70 %	% Sand > % Gravel	> 15 % Gravel	Sandy Elastic SILT with Gravel
< 70 %	% Sand < % Gravel	< 15 % Sand	Gravelly Elastic SILT
< 70 %	% Sand < % Gravel	> 15 % Sand	Gravelly Elastic SILT with Sand

Field Descriptions of Elastic Silt (MH) Group Soils
Table 4-5

Fines	Coarseness	Sand or Gravel	Description
> 70 %	< 15 % Plus 0.003 in. (0.075 mm)		Lean CLAY
> 70 %	15 to 25 % Plus 0.003 in. (0.075 mm)	% Sand > % Gravel	Lean CLAY with Sand
> 70 %	15 to 25 % Plus 0.003 in. (0.075 mm)	% Sand < % Gravel	Lean CLAY with Gravel
< 70 %	% Sand > % Gravel	< 15 % Gravel	Sandy Lean CLAY
< 70 %	% Sand > % Gravel	> 15 % Gravel	Sandy Lean CLAY with Gravel
< 70 %	% Sand < % Gravel	< 15 % Sand	Gravelly Lean CLAY
< 70 %	% Sand < % Gravel	> 15 % Sand	Gravelly Lean CLAY with Sand

Field Descriptions of Lean Clay Group (CL) Soils
Table 4-6

Fines	Coarseness	Sand or Gravel	Description
> 70 %	< 15 % Plus 0.003 in. (0.075 mm)		Fat CLAY
> 70 %	15 to 25 % Plus 0.003 in. (0.075 mm)	% Sand > % Gravel	Fat CLAY with Sand
> 70 %	15 to 25 % Plus 0.003 in. (0.075 mm)	% Sand < % Gravel	Fat CLAY with Gravel
< 70 %	% Sand > % Gravel	< 15 % Gravel	Sandy Fat CLAY
< 70 %	% Sand > % Gravel	> 15 % Gravel	Sandy Fat CLAY with Gravel
< 70 %	% Sand < % Gravel	< 15 % Sand	Gravelly Fat CLAY
< 70 %	% Sand < % Gravel	> 15 % Sand	Gravelly Fat CLAY with Sand

Field Description of Fat Clay Group (CH) Soils
Table 4-7

Fines	Coarseness	Sand or Gravel	Description
> 70 %	< 15 % Plus 0.003 in. (0.075 mm)		ORGANIC SOIL
> 70 %	15 to 25 % Plus 0.003 in. (0.075 mm)	% Sand > % Gravel	ORGANIC SOIL with Sand
> 70 %	15 to 25 % Plus 0.003 in. (0.075 mm)	% Sand < % Gravel	ORGANIC SOIL with Gravel
< 70 %	% Sand > % Gravel	< 15 % Gravel	Sandy ORGANIC SOIL
< 70 %	% Sand > % Gravel	> 15 % Gravel	Sandy ORGANIC SOIL with Gravel
< 70 %	% Sand < % Gravel	< 15 % Sand	Gravelly ORGANIC SOIL
< 70 %	% Sand < % Gravel	> 15 % Sand	Gravelly ORGANIC SOIL with Sand

Field Description of Organic Fine Grained Soil (OL/OH) Group
Table 4-8

4.2.4 Angularity

The field description of angularity of the coarse size particles of a soil (gravel, cobbles and sand) should conform to the criteria as outlined in Table 4-9.

Description	Criteria
Angular	Coarse grained particles have sharp edges and relatively plane sides with unpolished surfaces
Subangular	Coarse grained particles are similar to angular description but have rounded edges
Subrounded	Coarse grained particles have nearly plane sides but have well rounded corners and edges
Rounded	Coarse grained particles have smoothly curved sides and no edges

Criteria for the Field Description of Angularity
Table 4-9

4.2.5 Consistency and Relative Density

An important index property of cohesive (plastic) soils is its consistency, and is expressed by terms such as very soft, soft, medium stiff, stiff, very stiff, hard, and very hard. Similarly, a significant index property of cohesionless (non-plastic) soils is its relative density, which is expressed by terms such as very loose, loose, medium dense, dense, and very dense. The standard penetration test (ASTM 1586) is an in-situ field test that is widely used to define cohesive soil consistency, and cohesionless soil density. Tables 4-10 and 4-11 should be used to describe consistency, or relative density.

SPT N (Blows/Foot)	Consistency
0 to 1	Very Soft
2 to 4	Soft
5 to 8	Medium Stiff
9 to 15	Stiff
16 to 30	Very Stiff
31 to 60	Hard
Over 60	Very Hard

Consistency of Cohesive Soils
Table 4-10

SPT N (Blows/Foot)	Relative Density
0 to 4	Very Loose
5 to 10	Loose
11 to 24	Medium Dense
25 to 50	Dense
Over 50	Very Dense

Relative Density of Cohesionless Soils
Table 4-11

4.2.6 Color

Soil color is not in itself a specific engineering property, but may be an indicator of other significant geologic processes that may be occurring within the soil mass. Color may also aid in the subsurface correlation of soil units. Soil color should be determined in the field at their natural moisture content. The predominant color of the soil should be based on the *Munsell Soil Color Charts.*

4.2.7 Moisture

A visual estimation of the relative moisture content of the soil should be made during the field classification. The field moisture content of the soil should be based on the criteria outlined in Table 4-12.

Moisture Description	Criteria
Dry	Absence of moisture; dusty, dry to the touch
Moist	Damp but no visible water
Wet	Visible free water

Criteria for Describing Moisture Condition
Table 4-12

4.2.8 Structure

Soils often contain depositional or physical features that are referred to as soil structure. These features should be described following the criteria as outlined in Table 4-13.

Description	Criteria
Stratified	Alternating layers of varying material or color with layers at least 0.25 in. thick; note thickness and inclination.
Laminated	Alternating layers of varying material or color with layers less than 0.25 in. thick; note thickness and inclination
Fissured	Breaks along definite planes of fracture with little resistance to fracturing.
Slickensided	Fracture planes appear polished or glossy, sometimes striated.
Blocky	Cohesive soil that can be broken down into smaller angular lumps which resists further breakdown.
Disrupted	Soil structure is broken and mixed. Infers that material has moved substantially - landslide debris.
Homogeneous	Same color and appearance throughout.

Criteria for Describing Soil Structure
Table 4-13

4.2.9 HCl Reaction

Calcium carbonate is a common cementing agent in soils. To test for the presence of this cementing agent the soil sample should be tested with dilute hydrochloric acid (HCL). The reaction of the soil sample with HCL should be reported in accordance with the criteria outlined in Table 4-14.

HCL Reaction Description	Criteria
No HCL Reaction	No visible reaction
Weak HCL Reaction	Some reaction with bubbles forming slowly
Strong HCL Reaction	Violent reaction with bubbles forming immediately

Soil Reaction to Hydrochloric Acid
Table 4-14

4.2.10 Test Hole Logging

The protocol for field logging the test hole is to describe the soil properties in the following order:

Soil Description ⇒ Angularity ⇒ Density ⇒ Color ⇒ Moisture ⇒ Structure ⇒ HCL Reaction

Some examples of this field logging protocol are as follows:

- Well graded Gravel, with cobbles and boulders, sub-rounded, very dense, light brown, wet, homogeneous, no HCL reaction.
- Sandy SILT, medium dense, light gray, moist, laminated, no HCL reaction
- Fat CLAY with sand, medium stiff, dark gray, wet, blocky, no HCL reaction

4.3 Rock Classification

Rock classification for engineering purposes consists of two basic assessments; one based on the *intact* properties of the rock, and the other based on the *in situ* (engineering) features of the rock mass.

- **Intact properties** – This assessment is based on the character of the intact rock (hand specimens and rock core) in terms of its genetic origin, mineralogical make-up, texture, and degree of chemical alteration and/or physical weathering.
- **In situ properties** – This assessment is based on the engineering characteristics (orientation, spacing, etc.) of the bounding discontinuities (bedding, joints, foliation planes, shear zones, faults etc.) within the rockmass.

Both assessments are essential engineering characterization of the rock mass, and are the basis for rock slope design and excavation, foundation design on rock, rock anchorage, and characterizing rock quarries.

4.3.1 Intact Properties

Rocks are divided into three general categories based on genetic origin. These categories are *igneous rocks, sedimentary rocks, and metamorphic rocks.*

4.3.1.1 Igneous Rocks

Igneous rocks are those rocks that have been formed by the solidification of molten or partially molten material. Typically, they are classified based on mineralogy and genetic occurrence (intrusive or extrusive). See Table 4-15 for examples. Texture is the most conspicuous feature (key indicator) of genetic origin (see Table 4-16).

In general, coarser grained igneous rocks are intrusive having been formed (solidified) before the molten material has reached the surface; while the finer grained igneous rocks are extrusive and have formed (solidified) after the molten material has reached the surface. Although this generality is true in most cases, it must be stressed that there is no clear line between the two.

A special, but common, class of igneous rock is pyroclastic rocks (See Table 4-17). These rocks have been derived from volcanic material that has been explosively or aerially ejected from a volcanic vent.

Intrusive (Coarse-grained)	Primary Minerals	Common Accessory Minerals	Extrusive (Fine Grained)
Granite	Quartz, K-feldspar	Plagioclase, Mica, Amphibole, Pyroxene	Rhyolite
Quartz Diorite	Quartz Plagioclase	Hornblende, Pyroxene, Mica	Dacite
Diorite	Plagioclase	Mica, Amphibole, Pyroxene	Andesite
Gabbro	Plagioclase, Pyroxene	Amphibole	Basalt

Common Igneous Rocks
Table 4-15

Texture	Grain Size	Genetic Origin
Pegmatitic	Very large; diameters greater than 0.8 in.	Intrusive
Phaneritic	Can be seen with the naked eye	Intrusive or Extrusive
Porphyritic	Grained of two widely different sizes	Intrusive or Extrusive
Aphanitic	Cannot be seen with the naked eye	Extrusive or Intrusive
Glassy	No grains present	Extrusive

Igneous Rock Textures
Table 4-16

Table 4-16 should be used only as an aid in determining the possible genetic origin (intrusive versus extrusive) of the igneous rock. For grain size determination and descriptors use Table 4-23.

Rock Name	Characteristics
Pyroclastic Breccia	Pyroclastic rock whose average pyroclast size exceeds 2.5 inches and in which *angular* pyroclasts predominate.
Agglomerate	Pyroclastic rock whose average pyroclast size exceeds 2.5 inches and in which *rounded* pyroclasts predominate.
Lapilli Tuff	Pyroclastic rock whose average pyroclast size is 0.08 to 2.5 inches.
Ash Tuff	Pyroclastic rock whose average pyroclast size is less than 0.08 inches.

Pryoclastic Rocks
Table 4-17

Some extrusive volcanic rocks contain small sub-rounded to rounded cavities (vesicles) formed by the expansion of gas or steam during the solidification process of the rock. The occurrence of these vesicles are to be reported using an estimate of the relative area that the vesicles occupy in relationship to the total area of the sample and the designation as outlined in Table 4-18.

Designation	Percentage (by volume) of Total Sample
Slightly Vesicular	5 to 10 Percent
Moderately Vesicular	10 to 25 Percent
Highly Vesicular	25 to 50 Percent
Scoriaceous	Greater than 50 Percent

Degree of Vesicularity
Table 4-18

4.3.1.2 Sedimentary Rocks

Sedimentary rocks are formed from preexisting rocks. They are formed by the deposition and lithification of sediments such as gravels, sands, silts, and clays; or rocks formed by the chemical precipitation from solutions (rock salt), or from secretion of organisms (limestone). As indicated above sedimentary rocks are classified based on whether they are derived from clastic sediments or from chemical precipitates/ organisms. See Tables 4-19 and 4-20 for their classification.

Rock Name	Original Sediment
Conglomerate	Sand, Gravel, Cobbles, and Boulders
Sandstone	Sand
Siltstone	Silt
Claystone	Clay
Shale	Laminated Clay and Silt

Clastic Sedimentary Rocks
Table 4-19

Rock Name	Primary Mineral
Limestone	Calcite
Dolomite	Dolomite
Chert	Quartz

Non-Clastic Sedimentary Rocks
Table 4-20

4.3.1.3 Metamorphic Rocks

Metamorphic rocks are those rocks that have been formed from *pre-existing* rocks when mineral in the rocks have been re-crystallized to form new minerals in response to changes in temperature and/or pressure. Metamorphic rocks are classified based on two general categories; foliated and non-foliated metamorphic rocks. Foliated metamorphic rocks contain laminated structure resulting from the segregation of different minerals into layers parallel to schistosity. Non-foliated metamorphic rocks are generally re-crystallized and equigranular.

Rock Name	Texture	Formed From	Primary Minerals
Slate	Platy, fine grained	Shale, Claystone	Quartz, Mica
Phyllite	Platy, fine grained with silky sheen	Shale, Claystone, Fine grained pyroclastic	Quartz, Mica
Schist	Medium grained, with irregular layers	Sedimentary and Igneous Rocks	Mica, Quartz, Feldspar, Amphibole
Gneiss	Layered, medium to coarse grained	Sedimentary and Igneous Rocks	Mica, Quartz, Feldspar, Amphibole

Foliated Metamorphic Rocks
Table 4-21

Rock Name	Texture	Formed From	Primary Minerals
Greenstone	Crystalline	Volcanics, Intermediate - Mafic Igneous	Mica, Hornblende, Epidote
Marble	Crystalline	Limestone, Dolomite	Calcite, Dolomite
Quartzite	Crystalline	Sandstone, Chert	Quartz
Amphibolite	Crystalline	Mafic Igneous, Calcium - Iron Bearing Sediments	Hornblende, Plagioclase

Non-Foliated Metamorphic Rocks
Table 4-22

4.3.1.4 Rock Color

Rock color is not in itself a specific engineering property, but may be an indicator of the influence of other significant geologic processes that may be occurring in the rock mass (e.g. fracture flow of water, weathering, alteration, etc.). Color may also aid in the subsurface correlation of rock units. The color of the rock is based on the ***Geological Society of America Rock Color Charts***. Rock color should be determined as soon as the core has been recovered from the test hole.

4.3.1.5 Grain Size

Grain size is defined as the size of the particles or mineral crystals that make up the intact portion of the rockmass. The description of grain size should follow the criteria as set forth in Table 4-23.

Grain Size	Description	Criteria
Less than 0.04 inches	Fine grained	Few crystal boundaries/ grains distinguishable in the field or with a hand lens.
0.04 to 0.2 inches	Medium grained	Most crystal boundaries/ grains distinguishable with the aid of a hand lens.
Greater than 0.2 inches	Coarse grained	Most crystal boundaries/ grains distinguishable with the naked eye.

Grain Size
Table 4-23

4.3.1.6 Weathered State of Rock

Weathering is the process of mechanical and/or chemical degradation of the rock mass through exposure to the elements (e.g. rain, wind, ground water, ice, change in temperature etc.). In general, the strength of the rock tends to decrease as the degree of weathering increases. In the earliest stages of weathering only discoloration and slight change in texture occur. As the weathering of the rock advances significant changes occur in the physical properties of the rock mass, until ultimately the rock is decomposed to soil.

The classification of the weathered state of the rock mass is based on six weathering classes (See Table 4-24) developed by the International Society of Rock Mechanics (ISRM).

Term	Description	Grade
Fresh	No visible signs of rock material weathering; perhaps slight discoloration in major discontinuity surfaces.	I
Slightly Weathered	Discoloration indicates weathering of rock material and discontinuity surfaces. All the rock material may be discolored by weathering, and may be somewhat weaker externally than in its fresh condition.	II
Moderately Weathered	Less than half of the rock material is decomposed and/or disintegrated to soil. Fresh or discolored rock is present either as a continuous framework or as corestones.	III
Highly Weathered	More than half of the rock material is decomposed and/or disintegrated to soil. Fresh or discolored rock is present either as discontinuous framework or as corestone.	IV
Completely Weathered	All rock material is decomposed and/or disintegrated to soil. The original mass structure is still largely intact.	V
Residual Soil	All rock material is converted to soil. The mass structure and material fabric is destroyed. There is a large change in volume, but the soil has not been significantly transported.	VI

Weathered State of Rock
Table 4-24

Alteration is the process that applies *specifically* to the changes in the chemical or mineral composition of the rock due to hydrothermal or metamorphic activities. Alteration may occur in zones or pockets, and can be found at depths far below that of normal weathering. Alteration does not strictly infer that there is a degradation of the rockmass or an associated loss in strength.

Where there has been a degradation of the rockmass due to alteration, Table 4-24 may be used to describe the alteration by simply substituting the word *"altered"* for the word "*weathered*" for Grade II through Grade V.

4.3.1.6 Relative Rock Strength

Rock strength is controlled by many factors including degree of induration, cementation, crystal bonding, degree of weathering or alteration, etc. Determination of relative rock strength can be estimated by simple field tests, which can be refined, if required, through laboratory testing. The relative rock strength should be determined based on the ISRM method outlined in Table 4-25. Due to the potential for variable rock conditions, multiple relative strength designations may be required for each core run.

Grade	Description	Field Identification	Uniaxial Compressive Strength (Approx)
R0	Extremely Weak Rock	Indented by thumbnail	0.04 to 0.15 ksi
R1	Very Weak Rock	Specimen crumbles under sharp blow with point of geological hammer, and can be cut with a pocket knife.	0.15 to 3.6 ksi
R2	Moderately Weak Rock	Shallow cuts or scrapes can be made in a specimen with a pocket knife. Geological hammer point indents deeply with firm blow.	3.6 to 7.3 ksi
R3	Moderately Strong Rock	Specimen cannot be scraped or cut with a pocket knife, shallow indentation can be made under firm blows from a hammer point.	7.3 to 15 ksi
R4	Strong Rock	Specimen breaks with one firm blow from the hammer end of a geological hammer.	15 to 29 ksi
R5	Very Strong Rock	Specimen requires many blows of a geological hammer to break intact sample.	Greater than 29 ksi

Relative Rock Strength
Table 4-25

4.3.1.7 Slaking

Slaking is defined as the disintegration of a rock under conditions of wetting and drying, or when exposed to air. This behavior is related primarily to the chemical composition of the rock. It can be identified in the field if samples shrink and crack, or otherwise degrade upon drying, or being exposed to air for several hours. If degradation of the rock sample occurs, and slaking is suspected; an air-dried sample may be placed in clean water to observe a reaction. The greater the tendency for slaking, the more rapid the reaction will be when immersed in water. This tendency should be expressed on the field logs as *"potential for slaking"*, and can be confirmed through laboratory testing.

4.3.2 In Situ Properties

The in-situ properties of a rock mass are based on the engineering properties of the bounding structure within the rockmass. Structure refers to large-scale (megascopic) planar features which separate intact rock blocks, and impact the overall strength, permeability, and breakage characteristics of the rock mass. Common planar features within the rockmass include joints, bedding, and faults; collectively called **discontinuities**. These common planar features are defined as follows:

Joints – Joints are fractures within the rockmass along which there has been no identifiable displacement.

Bedding – Bedding is the regular layering in sedimentary rocks marking the boundaries of small lithological units or beds.

Faults – Faults are fractures or fracture zones within the rockmass along which there has been significant shear displacement of the sides relative to each other. The presence of gouge and/ or slickensides *may* be indicators of movement.

When defining the in-situ properties of these planar features (discontinuities) within the rockmass, the recovered rock core from the borehole is examined, and the following information recorded:

- Discontinuity Spacing
- Discontinuity Condition
- Core Recovery
- Rock Quality Designation (RQD)
- Fractures Frequency (FF)
- Voids

4.3.2.1 Discontinuity Spacing

Discontinuity spacing is the distance between *natural* discontinuities as measured along the borehole. An evaluation of discontinuity spacing within each core run should be made, and reported on the field logs in conformance with the criteria set forth in Table 4-26. Mechanical breaks caused by drilling or handling should *not* be included in the discontinuity spacing evaluation.

Description	Spacing of Discontinuity
Very Widely Spaced	Greater than 10 feet
Widely Spaced	3 feet to 10 feet
Moderately Spaced	1 feet to 3 feet
Closely Spaced	2 inches to 12 inches
Very Closely Spaced	Less than 2 inches

Discontinuity Spacing
Table 4-26

4.3.2.2 Discontinuity Condition

The surface properties of discontinuities, in terms of roughness, wall hardness, and / or gouge thickness, affects the shear strength of the discontinuity. An assessment of the discontinuities within each core run should be made, and reported on the field logs in conformance with the descriptions and conditions set forth in Table 4-27.

Condition	Description
Excellent Condition	Very rough surfaces, no separation, hard discontinuity wall.
Good Condition	Slightly rough surfaces, separation less than 0.05 inches, hard discontinuity wall.
Fair Condition	Slightly rough surface, separation greater than 0.05 inches, soft discontinuity wall.
Poor Condition	Slickensided surfaces, or soft gouge less than 0.2 inches thick, or open discontinuities 0.05 to 0.2 inches.
Very Poor Condition	Soft gouge greater than 0.2 inches, or open discontinuities greater than 0.2 inches.

Discontinuity Condition
Table 4-27

4.3.2.3 Core Recovery (CR)

Core recovery is defined as the ratio of core recovered to the run length expressed as a percentage. Therefore:

$$\text{Core Recovery (\%)} = 100 \times \frac{\text{Length of Core Recovered}}{\text{Length of Core Run}}$$

These values should be recorded on the field logs on a core run by core run basis.

4.3.2.4 Rock Quality Designation (RQD)

The RQD provides a subjective estimate of rock mass quality based on a modified core recovery percentage from a double or triple tube diamond core barrel. The RQD is defined as the percentage of rock core recovered in intact pieces of 4 inches or more in length in the length of a core run, generally 6 feet in length. Therefore:

$$\text{RQD (\%)} = 100 \times \frac{\text{Length of Core in pieces} > 4 \text{ inches}}{\text{Length of Core Barrel}}$$

Mechanical breaks caused by drilling or handling should not be included in the RQD calculation. Vertical fractures in the core should not be utilized in the RQD calculation.

4.3.2.5 Fracture Frequency (FF)

Fracture frequency is defined as the number of *natural* fractures per unit of length of core recovered. The fracture frequency is measured for each core run, and recorded on the field logs as fractures per foot. Mechanical breaks caused by drilling or handling should *not* be included in the fracture frequency count. In addition, vertical fractures in the core should *not* be utilized in the fracture frequency determination.

4.3.2.6 Voids

Voids are defined as relatively large open spaces within the rockmass caused by chemical dissolution or the action of subterranean water within the rockmass. In addition, voids can be a result of subsurface mining activities. Voids, when encountered, should be recorded on the field logs. Attempts should be made to determine the size of the void by drilling action, water loss, etc.

4.3.3 Test Hole Logging

The protocol for field logging the test hole is to first describe the *intact* properties if the rockmass followed by the description of the *in-situ* properties:

[Intact Properties] Rock Name ⇒ Rock Color ⇒ Grain Size ⇒ Weathered State ⇒ Relative Rock Strength. *then* [In-situ Properties] Discontinuity Spacing ⇒ Discontinuity Condition ⇒ Core Recovery ⇒ RQD ⇒ Fracture Frequency.

Some examples of this field logging protocol are as follows:

Diorite, medium light grey (N6), medium grained, slightly weathered, moderately strong rock (R3). [***Intact Properties***] Discontinuities are widely spaced, and in fair condition. CR = 100%, RQD = 80%, FF = 2. [***In-situ Properties***]

Basalt, highly vesicular, dark grey (N3), very fined grained, slightly weathered, fresh, strong rock (R4). [***Intact Properties***] Discontinuities are closely spaced, and in poor condition. CR = 65%, RQD = 40%, FF = 20. [***In-situ Properties***]

SILTSTONE, medium dark grey (N4), very fine grained, slightly weathered, very weak rock (R1), potential for slaking. [***Intact Properties***] Discontinuities are widely spaced, and in fair condition. CR = 100%, RQD = 100%, FF = 1. [***In-situ Properties***]

The standard legend for WSDOT boring logs is provided in Appendix 4-A.

4.4 References

Munsell Soil Color Charts, 2000, GretagMacbeth, New Windsor, NY.

Geological Society of America, 1991, *Rock Color Charts*, Boulder, CO.

Washington State
Department of Transportation

Boring and Test Pit Legend

Sampler Symbols

	Standard Penetration Test
	Non-Standard Sized Penetration Test
	Shelby Tube
P	Piston Sample
	Washington Undisturbed
	Vane Shear Test
	Core
	Becker Hammer
B	Bag Sample

Well Symbols

	Cement Surface Seal
	Piezometer Pipe in Granular Bentonite Seal
	Piezometer Pipe in Sand
	Well Screen in Sand
	Granular Bentonite Seal
	Inclinometer Casing or PVC Pipe in Cement Bentonite Grout
	Sand
	Vibe Wire in Grout
	Miscellaneous, noted on boring log

Laboratory Testing Codes

UU	Unconsolidated Undrained Triaxial
CU	Consolidated Undrained Triaxial
CD	Consolidated Drained Triaxial
UC	Unconfined Compression Test
DS	Direct Shear Test
CN	Consolidation Test
GS	Grain Size Distribution
MC	Moisture Content
SG	Specific Gravity
OR	Organic Content
DN	Density
AL	Atterberg Limits
PT	Point Load Compressive Test
SL	Slake Test
DG	Degradation
LA	LA Abrasion
HT	Hydrometer Test
RS	Ring Shear Test
LOI	Loss on Ignition
CSS	Cyclic Simple Shear
DSS	Direct Simple Shear
RSM	Resilient Modulus

Soil Density Modifiers

Gravel, Sand & Non-plastic Silt		Elastic Silts and Clay	
SPT Blows/ft	Density	SPT Blows/ft	Consistency
0-4	Very Loose	0-1	Very Soft
5-10	Loose	2-4	Soft
11-24	Medium Dense	5-8	Medium Stiff
25-50	Dense	9-15	Stiff
>50	Very Dense	16-30	Very Stiff
(REF)	Refusal	31-60	Hard
		>60	Very Hard

Angularity of Gravel & Cobbles

Angular	Coarse particles have sharp edges and relatively plane sides with unpolished surfaces.
Subangular	Coarse grained particles are similar to angular but have rounded edges.
Subrounded	Coarse grained particles have nearly plane sides but have well rounded corners and edges.
Rounded	Coarse grained particles have smoothly curved sides and no edges.

Soil Moisture Modifiers

Dry	Absence of moisture; dusty, dry to touch
Moist	Damp but no visible water
Wet	Visible free water

Soil Structure

Stratified	Alternating layers of varying material or color at least 6mm thick; note thickness and inclination.
Laminated	Alternating layers of varying material or color less than 6mm thick; note thickness and inclination.
Fissured	Breaks along definite planes of fracture with little resistance to fracturing.
Slickensided	Fracture planes appear polished or glossy, sometimes striated.
Blocky	Cohesive soil that can be broken down into smaller angular lumps which resist further breakdown.
Disrupted	Soil structure is broken and mixed. Infers that material has moved substantially - landslide debris.
Homogeneous	Same color and appearance throughout.

HCL Reaction

No HCL Reaction	No visible reaction.
Weak HCL Reaction	Some reaction with bubbles forming slowly.
Strong HCL Reaction	Violent reaction with bubbles forming immediately.

Degree of Vesicularity of Pyroclastic Rocks

Slightly Vesicular	5 to 10 percent of total
Moderately Vesicular	10 to 25 percent of total
Highly Vesicular	25 to 50 percent of total
Scoriaceous	Greater than 50 percent of total

Washington State
Department of Transportation

Boring and Test Pit Legend

Grain Size

Fine Grained	< 0.04 in	Few crystal boundaries/grains are distinguishable in the field or with hand lens.
Medium Grained	0.04 to 0.2 in	Most crystal boundaries/grains are distinguishable with the aid of a hand lens.
Coarse Grained	> 0.2 in	Most crystal boundaries/grains are distinguishable with the naked eye.

Weathered State

Term	Description	Grade
Fresh	No visible sign of rock material weathering; perhaps slight discoloration in major discontinuity surfaces.	I
Slightly Weathered	Discoloration indicates weathering of rock material and discontinuity surfaces. All the rock material may be discolored by weathering and may be somewhat weaker externally than its fresh condition.	II
Moderately Weathered	Less than half of the rock material is decomposed and/or disintegrated to soil. Fresh or discolored rock is present either as a continuous framework or as core stones.	III
Highly Weathered	More than half of the rock material is decomposed and/or disintegrated to soil. Fresh or discolored rock is present either as discontinuous framework or as core stone.	IV
Completely Weathered	All rock material is decomposed and/or disintegrated to soil. The original mass structure is still largely intact.	V
Residual Soil	All rock material is converted to soil. The mass structure and material fabric is destroyed. There is a large change in volume, but the soil has not been significantly transported.	VI

Relative Rock Strength

Grade	Description	Field Identification	Uniaxial Compressive Strength approx
R1	Very Weak	Specimen crumbles under sharp blow from point of geological hammer, and can be cut with a pocket knife.	0.15 to 3.6 ksi
R2	Moderately Weak	Shallow cuts or scrapes can be made in a specimen with a pocket knife. Geological hammer point indents deeply with firm blow.	3.6 to 7.3 ksi
R3	Moderately Strong	Specimen cannot be scraped or cut with a pocket knife, shallow indentation can be made under firm blows from a hammer.	7.3 to 15 ksi
R4	Strong	Specimen breaks with one firm blow from the hammer end of a geological hammer.	15 to 29 ksi
R5	Very Strong	Specimen requires many blows of a geological hammer to break intact sample.	Greater than 29 ksi

Discontinuities

Spacing	
Very Widely	Greater than 10 ft
Widely	3 ft to 10 ft
Moderately	1 ft to 3 ft
Closely	2 inches to 12 inches
Very Closely	Less than 2 inches

RQD (%)

$$\frac{100(\text{length of core in pieces} > 100\text{mm})}{\text{Length of core run}}$$

Condition	
Excellent	Very rough surfaces, no separation, hard discontinuity wall
Good	Slightly rough surfaces, separation less than 0.05 in, hard discontinuity wall.
Fair	Slightly rough surfaces, separation greater than 0.05 in, soft discontinuity wall.
Poor	Slickensided surfaces, or soft gouge less than 0.2 in thick, or open discontinuities 0.05 to 0.2 in.
Very Poor	Soft gouge greater than 0.2 in thick, or open discontinuities greater than 0.2 in.

Fracture Frequency (FF) is the average number of fractures per 1 ft of core. This does not include mechanical breaks caused by drilling or handling.

Datum:
NAD 83/91 HARN = North American Datum of 1983/1991 High Accuracy Reference Network
NAVD88 = North American Vertical Datum of 1988
SPN (ft) = State Plane North (ft)
SPS (ft) = State Plane South (ft)

Chapter 5 Engineering Properties of Soil and Rock

5.1 Overview

The purpose of this chapter is to identify, either by reference or explicitly herein, appropriate methods of soil and rock property assessment, and how to use that soil and rock property data to establish the final soil and rock parameters to be used for geotechnical design. The final properties to be used for design should be based on the results from the field investigation, the field testing, and the laboratory testing, used separately or in combination. Site performance data should also be used if available to help determine the final geotechnical properties for design. The geotechnical designer's responsibility is to determine which parameters are critical to the design of the project and then determine those parameters to an acceptable level of accuracy. See Chapter 2, and the individual chapters that cover each geotechnical design subject area, for further information on what information to obtain and how to plan for obtaining that information.

5.2 The Geologic Stratum as the Basis for Property Characterization

The development of soil and rock properties for geotechnical design purposes begins with developing/defining the geologic strata present at the site in question. Therefore, the focus of geotechnical design property assessment and final selection shall be on the individual geologic strata identified at the project site. A geologic stratum is characterized as having the same geologic depositional history, stress history, and degree of disturbance, and generally has similarities throughout the stratum in terms of density, source material, stress history, hydrogeology, and macrostructure. The properties of each stratum shall be consistent with the stratum's geologic depositional and stress history, and macrostructure. Note that geologic units/formations identified in geologic maps may contain multiple geologic strata as defined in this GDM.

Once the geologic strata are defined, Engineering Stratagraphic Units (ESU's) are developed for the purpose of defining zones within the subsurface profile with similar properties for design. If there are multiple geologic strata as previously defined that have approximately the same engineering properties, multiple geologic strata may be grouped into a single ESU to simplify the design. However, soil and rock properties for design should not be averaged across multiple geologic strata except as noted later in this section, or unless averaging the properties results in an insignificant difference in the design outcome. If it is not clear that averaging the properties together will have an insignificant difference in the design outcome, the most conservative value of the property in question for the strata grouped together into one ESU should be used for design, or the strata should not be grouped together into one ESU.

The properties of a given geologic stratum at a project site may vary significantly from point to point within the stratum. In some cases, a measured property value may be closer in magnitude to the measured property value in an adjacent geologic stratum than to the measured properties at another point within the same stratum. It should also be recognized that some properties (e.g., undrained shear strength in normally consolidated clays) may vary as a function of a stratum dimension (e.g., depth

below the top of the stratum). Where the property within the stratum varies in this manner, the design parameters shall be developed taking this variation into account, which may result in multiple values of the property within the stratum and therefore multiple ESU's within the stratum.

Since ESU's are defined as zones of soil or rock with consistent engineering properties, properties of ESU's shall not be averaged together, except as noted in the following sentences. For design methods that require a very simplified stratigraphy be used, to create the simplified stratigraphy, a weighted average of the properties from each ESU based on the design ESU thickness should be used to estimate the properties of the simplified ESU for the design method in question. An example of this approach is provided in the AASHTO LRFD Bridge Design Specifications, Article C3.10.3.1, in particular Table 1 of that article. However, there is a significant risk that weaker materials, seams, layers, or structures (e.g., fractures, fissures, slickensides) within a stratum or ESU will dominate the performance of the geotechnical structure being designed, the design properties selected shall reflect the weakest aspects of the stratum or ESU rather than taking a weighted average.

5.3 Influence of Existing and Future Conditions on Soil and Rock Properties

Many soil properties used for design are not intrinsic to the soil type, but vary depending on conditions. In-situ stresses, changes in stresses, the presence of water, rate and direction of loading, and time can all affect the behavior of soils. Prior to evaluating the properties of a given soil, it is important to determine the existing conditions as well as how conditions may change over the life of the project. Future construction such as new embankments may place new surcharge loads on the soil profile or the groundwater table could be raised or lowered. Often it is necessary to determine how subsurface conditions or even the materials themselves will change over the design life of the facility that is constructed. Normally consolidated clays can gain strength with increases in effective stress, and overconsolidated clays may lose strength with time when exposed in cuts, unloaded, or exposed to water. Some construction materials such as weak rock may lose strength due to weathering within the design life of the embankment. These long-term effects shall be considered when selecting properties to use for design.

5.4 Methods of Determining Soil and Rock Properties

Subsurface soil or rock properties are generally determined using one or more of the following methods:

- in-situ testing during the field exploration program;
- laboratory testing, and
- back-analysis based on site performance data

The two most common in-situ test methods for use in soil are the Standard Penetration Test, (SPT) and the cone penetrometer test (CPT). Section 5.4 describes these tests as well as other in-situ tests. The laboratory testing program generally consists of index tests to obtain general information or to use with correlations to estimate design properties, and performance tests to directly measure specific engineering properties.

Back-analysis is used to tie the soil or rock properties to the quantifiable performance of the slope, embankment, wall, or foundation (see Section 5.7).

The detailed measurement and interpretation of soil and rock properties shall be consistent with the guidelines provided in FHWA-IF-02-034, *Evaluation of Soil and Rock Properties*, Geotechnical Engineering Circular No. 5 (Sabatini, et al., 2002), except as specifically indicated herein.

5.5 In-Situ Field Testing

Standards and details regarding field tests such as the Standard Penetration Test (SPT), the Cone Penetrometer Test (CPT), the vane shear test, and other tests and their use provided in Sabatini et al. (2002) should be followed, except as specifically noted herein. Regarding Standard Penetration Tests (SPT), the N-values obtained in the field depend on the equipment used and the skill of the operator, and shall be corrected before they are used in design so that they are consistent with the design method and correlations being used. Many of the correlations developed to determine soil properties are based on N60-values.

SPT N values shall be corrected for hammer efficiency, if applicable to the design method or correlation being used, using the following relationship.

$$N_{60} = (ER/60\%)\ N \qquad (5\text{-}1)$$

Where:

N = uncorrected SPT value (blows/ft)
N60 = SPT blow count corrected for hammer efficiency (blows/ft)
ER = Hammer efficiency expressed as percent of theoretical free fall energy delivered by the hammer system actually used.

The following values for ER may be assumed if hammer specific data are not available:

ER = 60% for conventional drop hammer using rope and cathead
ER = 80% for automatic trip hammer

Hammer efficiency (ER) for specific hammer systems used in local practice may be used in lieu of the values provided. If used, specific hammer system efficiencies shall be developed in general accordance with ASTM D-4633 for dynamic analysis of driven piles or other accepted procedure. See Chapter 3 for additional information on ER, including specific measurements conducted for WSDOT drilling equipment.

Corrections for rod length, hole size, and use of a liner may also be made if appropriate. In general, these are only significant in unusual cases or where there is significant variation from standard procedures. These corrections may be significant for evaluation of liquefaction. Information on these additional corrections may be found in: “Proceedings of the NCEER Workshop on Evaluation of Liquefaction Resistance of Soils”; Publication Number: MCEER-97-0022; T.L. Youd, I.M. Idriss (1997).

N-values are also affected by overburden pressure, and shall be corrected for that effect, if applicable to the design method or correlation being used. N values corrected for both overburden and the efficiency of the field procedures used shall be designated as N160. The overburden correction equation that should be used is:

$$N1_{60} = C_N N_{60} \quad (5\text{-}2)$$

Where:

$$C_N = [0.77 \log10 (20/\sigma'v)], CN < 2.0 \quad (5\text{-}3)$$

C_N = correction factor for overburden
N_{60} = N-value corrected for energy efficiency
σ'_v = vertical effective stress at the location of the SPT N-value (TSF)

In general, correlations between N-values and soil properties should only be used for cohesionless soils, and sand in particular. Caution should be used when using N-values obtained in gravelly soil. Gravel particles can plug the sampler, resulting in higher blow counts and estimates of friction angles than actually exist. Caution should also be used when using N-values to determine silt or clay parameters, due to the dynamic nature of the test and resulting rapid changes in pore pressures and disturbance within the deposit. Correlations of N-values with cohesive soil properties should generally be considered as preliminary. N-values can also be used for liquefaction analysis. See Chapter 6 for more information regarding the use of N-values for liquefaction analysis.

In general design practice, hydraulic conductivity is estimated based on grain size characteristics of the soil strata (see Highway Runoff Manual M 31-16, Section 4-5). In critical applications, the hydraulic conductivity may be determined through in-situ testing. A discussion of field measurement of permeability is presented in Sabatini et al. (2002) and Mayne et al. (2002), and ASTM D 4043 presents a guide for the selection of various field methods. If in-situ test methods are utilized to determine hydraulic conductivity, one or more of the following methods should be used:

- Well pumping tests
- Packer permeability tests
- Seepage Tests
- Slug tests
- Piezocone tests
- Flood tests or Pit Infiltration Tests (PIT) – applies mainly to infiltration facility design – see Section 4-5 of the Highway Runoff Manual (2004) M 31-16.

5.5.1 Well Pumping Tests

Pump tests can be used to provide an estimate of the overall hydraulic conductivity of a geologic formation, and since it is in essence a full scale test, it directly accounts for the layering and directionality of the hydraulic characteristics of the formation. The data provided can be used to determine the requirements for construction dewatering systems for excavations. However, pump tests can be quite expensive and can take a significant amount of time to complete. Furthermore, care must be exercised when conducting this type of test, especially if potentially contaminated zones are present that could be mobilized during pumping. This could also create problems with disposal of the pumped water. Impact to adjacent facilities, such as drinking wells and subsidence caused by dewatering, should be evaluated when planning this type of test. For this test, the method prescribed in ASTM D 4050 should be used. Analysis of the results of pumping tests requires experience and a thorough knowledge of the actual geologic conditions present at the test location. The time-drawdown response curves are unique to a particular geologic condition. Therefore, knowledge

of the actual geologic conditions present at the test location is required in order to choose the correct analysis procedure, e.g., whether the aquifer is leaky, unconfined, or bounded, etc.

5.5.2 Packer Permeability Tests

Packer permeability tests can be used to measure the hydraulic conductivity of a specific soil or rock unit. The information obtained is used primarily in seepage studies. This test is conducted by inserting the packer units to the desired test location after the boring has been properly cleaned out. The packers are expanded to seal off the zone being tested, and water is injected into the borehole under constant pressure. Measurements of the flow rate are taken at regular time intervals. Upon completion of testing at a particular depth, the packers are lowered to a new test depth. Test depths should be determined from cores and geophysical logs of the borehole, prior to hydraulic conductivity testing. Note that if the packer test is performed in soil borings, casing must be installed. See Mayne et al. (2002) for additional information on this type of test.

5.5.3 Seepage Tests

Three types of seepage tests are commonly used: falling head, rising head and constant water level methods. In general, either the rising or falling level methods should be used if the hydraulic conductivity is low enough to permit accurate determination of the water level. In the falling head method, the borehole or piezometer is filled with water that is allowed to seep into the soil. The rate of drop of the water surface in the casing is monitored. The rising head method consists of bailing the water out of the borehole and observing the rate of rise until the change becomes negligible. The constant water level method is used if soil is too permeable to allow accurate measurement of the rising or falling water level. General guidance on these types of tests is provided in Mayne et al. (2002).

Boreholes (or in subsequently installed piezometers) in which seepage tests are to be performed should be drilled using only clear water as the drilling fluid. This precludes the formation of a mud cake on the walls of the hole or clogging of the soil pores with drilling mud. The tests can be performed intermittently as the borehole is advanced. In general, the rising head test is preferred because there is less chance of clogging soil pores with suspended sediment.

Data from seepage tests only reflect the hydraulic conditions near the borehole. In addition the actual area of seepage at the base of the borehole may not be accurately known. During the rising head test, there is the danger of the soil at the bottom of the borehole becoming loosened or “quick” if too great a gradient is imposed. However, seepage tests can be used in soils with lower hydraulic conductivities than is generally considered suitable for pumping tests and if large volumes of water do not require disposal. Also note that if the test is conducted inside the piezometer, the hydraulic conductivity measured from this could be influenced by the material placed inside the borehole around the screened pipe.

5.5.4 Slug Tests

These tests are easy to perform and can be performed in a borehole in which a screened pipe is installed. Two types of slug tests are commonly used, falling head and rising head. Falling head slug tests are conducted by lowering a solid object such as a weighted plastic cylinder into the borehole causing an instantaneous water level rise. As the water level gradually returns to static, the rate is recorded. A rising head slug test can then be performed by suddenly removing the slug, causing an instantaneous lowering of the water level. By monitoring the rate of rise or fall of the water level in the borehole, an estimate of the hydraulic conductivity can be determined. For this test, the method prescribed in ASTM D 4044 should be used. However slug tests are not very reliable and may underestimate hydraulic conductivity by one or two orders of magnitude, particularly if the test well has been inadequately developed prior to testing. The test data will not provide an indication of the accuracy of the computed value unless a pumping test is done in conjunction with the slug test. Because the slug tests are short duration, they reflect hydraulic properties of the soil immediately surrounding the well intake.

5.4.5 Piezocone Tests

Details of the equipment and methodology used to conduct the piezocone test are provided in Sabatini et al. (2002). Piezocone data can be useful to estimate the hydraulic conductivity of silts and clays from interpretation of the coefficient of horizontal consolidation, ch, obtained from the piezocone measurements. The procedure involves pushing the cone to the desired depth, followed by recording pore pressures while the cone is held stationary. The test is usually run until 50 percent of the excess pore pressure has dissipated (t50). This requires knowledge of the initial in situ pore pressure at the test location. Dissipation tests are generally effective in silts and clays where large excess pore pressures are generated during insertion of the cone. Hydraulic conductivity can be estimated using various correlations with t50 and coefficient of horizontal consolidation (ch), (see Lunne et al. (1997), and Sabatini et al. (2002)). Estimation of hydraulic conductivity from CPT tests is subject to a large amount of uncertainty, and should be used only as a preliminary estimate of permeability.

5.5.6 Flood Tests

Flood tests or pilot infiltration tests are not always feasible, and in general are only used where unusual site conditions are encountered that are poorly modeled by correlation to soil gradation characteristics, and there is plenty of water available to conduct the test. The key to the success of this type of test is the estimate of the hydraulic gradient during the test, recognizing that the test hydraulic gradient could be much higher than the hydraulic gradient that is likely in service for the facility being designed. For more information, see the Highway Runoff Manual (2004).

5.6 Laboratory Testing of Soil and Rock

Laboratory testing is a fundamental element of a geotechnical investigation. The ultimate purpose of laboratory testing is to utilize repeatable procedures to refine the visual observations and field testing conducted as part of the subsurface field exploration program, and to determine how the soil or rock will behave under

the imposed conditions. The ideal laboratory program will provide sufficient data to complete an economical design without incurring excessive tests and costs. Depending on the project issues, testing may range from simple soil classification testing to complex strength and deformation testing.

5.6.1 Quality Control for Laboratory Testing

Improper storage, transportation and handling of samples can significantly alter the material properties and result in misleading test results. The requirements provided in Chapter 3 regarding these issues shall be followed.

Laboratories conducting geotechnical testing shall be either AASHTO accredited or fulfill the requirements of AASHTO R18 for qualifying testers and calibrating/ verifications of testing equipment for those tests being performed. In addition, the following guidelines (Mayne et al., 1997) for laboratory testing of soils should be followed:

1. Protect samples to prevent moisture loss and structural disturbance.
2. Carefully handle samples during extrusion of samples; samples must be extruded properly and supported upon their exit from the tube.
3. Avoid long-term storage of soil samples in Shelby tubes.
4. Properly number and identify samples.
5. Store samples in properly controlled environments.
6. Visually examine and identify soil samples after removal of smear from the sample surface.
7. Use pocket penetrometer or miniature vane only for an indication of strength.
8. Carefully select “representative” specimens for testing.
9. Have a sufficient number of samples to select from.
10. Always consult the field logs for proper selection of specimens.
11. Recognize disturbances caused by sampling, the presence of cuttings, drilling mud or other foreign matter and avoid during selection of specimens.
12. Do not depend solely on the visual identification of soils for classification.
13. Always perform organic content tests when classifying soils as peat or organic. Visual classifications of organic soils may be very misleading.
14. Do not dry soils in overheated or underheated ovens.
15. Discard old worn-out equipment; old screens for example, particularly fine (< No. 40) mesh ones need to be inspected and replaced often, worn compaction mold or compaction hammers (an error in the volume of a compaction mold is amplified 30x when translated to unit volume) should be checked and replaced if needed.
16. Performance of Atterberg limits requires carefully adjusted drop height of the Liquid Limit machine and proper rolling of Plastic Limit specimens.
17. Do not use tap water for tests where distilled water is specified.
18. Properly cure stabilization test specimens.

19. Never assume that all samples are saturated as received.
20. Saturation must be performed using properly staged back pressures.
21. Use properly fitted o-rings, membranes, etc. in triaxial or permeability tests.
22. Evenly trim the ends and sides of undisturbed samples.
23. Be careful to identify slickensides and natural fissures. Report slickensides and natural fissures.
24. Also do not mistakenly identify failures due to slickensides as shear failures.
25. Do not use unconfined compression test results (stress-strain curves) to determine elastic modulus values.
26. Incremental loading of consolidation tests should only be performed after the completion of each primary stage.
27. Use proper loading rate for strength tests.
28. Do not guesstimate e-log p curves from accelerated, incomplete consolidation tests.
29. Avoid "Reconstructing" soil specimens, disturbed by sampling or handling, for undisturbed testing.
30. Correctly label laboratory test specimens.
31. Do not take shortcut: such as using non-standard equipment or non-standard test procedures.
32. Periodically calibrate all testing equipment and maintain calibration records.
33. Always test a sufficient number of samples to obtain representative results in variable material.

5.6.2 Developing the Testing Plan

The amount of laboratory testing required for a project will vary depending on availability of preexisting data, the character of the soils and the requirements of the project. Laboratory tests should be selected to provide the desired and necessary data as economically as possible. Specific geotechnical information requirements are provided in the GDM chapters that address design of specific types of geotechnical features. Laboratory testing should be performed on both representative and critical test specimens obtained from geologic layers across the site. Critical areas correspond to locations where the results of the laboratory tests could result in a significant change in the proposed design. In general, a few carefully conducted tests on samples selected to cover the range of soil properties with the results correlated by classification and index tests is the most efficient use of resources.

The following should be considered when developing a testing program:

- Project type (bridge, embankment, rehabilitation, buildings, etc.)
- Size of the project
- Loads to be imposed on the foundation soils
- Types of loads (i.e., static, dynamic, etc.)
- Whether long-term conditions or short-term conditions are in view

- Critical tolerances for the project (e.g., settlement limitations)
- Vertical and horizontal variations in the soil profile as determined from boring logs and visual identification of soil types in the laboratory
- Known or suspected peculiarities of soils at the project location (i.e., swelling soils, collapsible soils, organics, etc.)
- Presence of visually observed intrusions, slickensides, fissures, concretions, etc. in sample – how will it affect results
- Project schedules and budgets
- Input property data needed for specific design procedures

Details regarding specific types of laboratory tests and their use are provided in Sabatini et al. (2002). Specifics regarding what is required in a laboratory testing plan is provided in Section 2.4.

5.7 Back-Analysis Based on Known Performance or Failure

Back-analysis to determine engineering properties of soil or rock is most often used with geotechnical failures. When failures occur, back analysis can be used to model the conditions, and loads which resulted in failure. Back-analysis can also be used in some situations where failure has not occurred but the geotechnical performance can be quantified (e.g., deformations). Back-analysis is a quantitative approach to adjust soil or rock properties to match measureable site performance.

To successfully carry out this approach, it is important to define the site geometry and stratigraphy, geologic history of the subsurface strata to be encountered, loading conditions, ground water conditions, and measurable soil properties. Since there are typically a number of variables to consider in most back-analyses (e.g., soil shear strength and unit weight of each stratum/ESU, the stratigraphy itself, the groundwater regime, the failure or deformation mechanism, the amount of deformation that has occurred, the location of the failure surface, the loading that occurred at the time the observed behavior occurred, etc.), all of the variables need to be defined before conducting the back-analysis so that the parameter of interest can be determined in a meaningful way.

Transient loading such as construction equipment live load shall not be included in the back-analysis, unless the transient load clearly caused failure (i.e., slope failed while equipment was on slope). If transient loads are included in the back-analysis, the rate of loading and its effect on the soil properties shall be addressed in the analysis.

To that end, the parameters used for the back-analysis shall be determined in a way that is consistent with the requirements provided in this manual. The back-analysis is then used to adjust the parameter of interest so that predicted behavior is consistent with the observed behavior. The observed behavior must be measurable in some way so that consistency between the observed and predicted behavior is quantifiably recognizable. If the behavior/performance is not quantifiable, then back-analysis will not be meaningful for determining or verifying design parameters.

If a back-analysis is to be conducted, the considerations and recommendations provided by Duncan and Stark (1992) shall be used. While the Duncan and Stark paper was written with regard to application to back-analysis of slope failures, the principles provided are generally applicable to other back-analysis situations.

5.7.1 Back-Analysis of Slopes

With landslides or slope failures, if the factor of safety for the slope is to be used as the performance measurement, a slope factor of safety of 1.0 shall be used, and shall accurately model the failure surface geometry and failure mechanism (Turner and Schuster 1996). It is important to determine or estimate the conditions that initiated the slope failure to successfully back-analyze the slope failure. See Stark, et al. (2011) for the principles that should be used to conduct slope failure back-analyses and a detailed example.

For first time slides, and slides in which the total historical deformation is relatively small, it shall be recognized that the shear strength estimated from the back-analysis is the mobilized shear strength at time of failure, not necessarily the residual shear strength, as the full development of residual strength conditions depends on the amount of deformation that has occurred along the slide failure surface (Hussain et al. 2010, Stark et al. 2011). In first time slides, the back-calculated shear strength is likely to be closer to the fully softened shear strength than the residual shear strength. Laboratory shear strength testing to measure the residual shear strength of the deposit should also be conducted and used in combination with the back-analyzed parameters for design purposes.

5.7.2 Back-Analysis of Soil Settlement Resulting from Changes in Loading

For embankment settlement, the performance measurement to be used is typically the magnitude of settlement measured, the rate at which the settlement occurred, or both. Pore pressure changes that occurred during embankment placement may also be used to help assess the rate of strength gain in soft compressible soils. If the embankment is reinforced with geosynthetic, strain in the geosynthetic should also be measured and used for back-analysis purposes. Monitoring of fill settlement and pore pressure in the soil during construction allows the soil properties and prediction of the rate of future settlement to be refined. For structures such as bridges that experience unacceptable settlement or retaining walls that have excessive deflection, the engineering properties of the soils can be determined if the magnitudes of the loads and structural details are known. As with slope stability analysis, the stratigraphy of the subsurface soil must be adequately known, including the history of the groundwater level at the site.

5.7.3 Back-Analysis of Foundations

Essentially, use of foundation load tests to measure foundation bearing resistance and deflection characteristics is a form of back-analysis, when such data is used to estimate soil properties, enabling the prediction of foundation performance in adjacent areas where the same soil or rock strata are encountered, but the thickness of the strata/ ESU's are different.

5.7.4 Use of Numerical Modeling for Back-Analysis

Numerical models typically have many degrees of freedom, and high quality input data is usually required to use such a complex tool for this purpose. If numerical models are used, they shall have gone through a calibration process for a similar situation. Approval by the WSDOT State Geotechnical Engineer is required for use of numerical modeling techniques for the purpose of back-analysis to estimate soil or rock properties. Approval will be based on the adequacy of the numerical model calibration,

how well the performance to be modeled is defined and quantified, and how well the variables/input parameters in the model are defined and measured such that a unique value of the parameter of interest can be accurately estimated.

5.8 Engineering Properties of Soil

5.8.1 Laboratory Index Property Testing

Laboratory index property testing is mainly used to classify soils, though in some cases, they can also be used with correlations to estimate specific soil design properties. Index tests include soil gradation and plasticity indices. For soils with greater than 10 percent passing the No. 200 sieve, a decision will need to be made regarding the full soil gradation curve and whether a hydrometer test in addition to sieve testing of the coarser particles (AASHTO T88) is necessary, or if a coarse gradation is sufficient (AASHTO T27). The full gradation range (AASHTO T88) will be needed in the following situations:

- Lateral load analysis of deep foundations using strain wedge theory
- Liquefaction analysis
- Infiltration design, or other analyses that require the determination of hydraulic conductivities
- Other analyses that require a d_{10} size, coefficient of uniformity, etc.

Classification using the coarse sieving only (AASHTO T27) may be adequate for design of MSE walls, general earthwork, footing foundations, gravity walls, and noise walls. These end use needs shall be considered when planning the laboratory investigation for a project.

5.8.2 Laboratory Performance Testing

Laboratory performance testing is mainly used to estimate strength, compressibility, and permeability characteristics of soil and rock. For rock, the focus of laboratory performance testing is typically on the shear strength of the intact rock, or on the shear strength of specific discontinuities (i.e., joint/seam) within the rock mass. See Section 5.9 for additional discussion on rock properties. Soil shear strength may be determined on either undisturbed specimens of finer grained soil (undisturbed specimens of granular soils are very difficult, if not impossible, to get), or disturbed or remolded specimens of fine or coarse grained soil. There are a variety of shear strength tests that can be conducted, and the specific type of test selected depends on the specific application. See Sabatini et al. (2002) for specific guidance on the types of shear strength tests needed for various applications, as well as the chapters in the GDM that cover specific geotechnical design topics.

Disturbed soil shear strength testing is less commonly performed, and is primarily used as supplementary information when performing back-analysis of existing slopes, or for fill material and construction quality assurance when a minimum shear strength is required. It is difficult to obtain very accurate shear strength values of soils in natural deposits through shear strength testing of disturbed (remolded) specimens, since the in-situ density and soil structure is quite difficult to accurately recreate, especially considering the specific in-situ density may not be known. The accuracy of this technique in this case must be recognized when interpreting the results. However,

for estimating the shear strength of compacted backfill, more accurate results can be obtained, since the soil placement method, as well as the in-situ density and moisture content, can be recreated in the laboratory with some degree of confidence. The key in the latter case is the specimen size allowed by the testing device, as in many cases, compacted fills have a significant percentage of gravel sized particles, requiring fairly large test specimens and test apparatus (i.e., minimum 3 to 4 inch diameter, or narrowest dimension specimens of 3 to 4 inches).

Typically, a disturbed sample of the granular backfill material (or native material in the case of obtaining supplementary information for back-analysis of existing slopes) is sieved to remove particles that are too large for the testing device and test standard, and is compacted into a mold to simulate the final density and moisture condition of the material. The specimens may or may not be saturated after compacting them and placing them in the shear testing device, depending on the condition that is to be simulated. In general, a drained test is conducted, or if it is saturated, the pore pressure during shearing can be measured (possible for triaxial testing; generally not possible for direct shear testing) to obtained drained shear strength parameters. Otherwise, the test is run slow enough to be assured that the specimen is fully drained during shearing (note that estimating the testing rate to assure drainage can be difficult). Multiple specimens using at least three confining pressures should be tested to obtain a shear strength envelope. See Sabatini et al. (2002) for additional details.

Tests to evaluate compressibility or permeability of existing subsurface deposits must be conducted on undisturbed specimens, and the less disturbance the better. See Sabatini et al. (2002) for additional requirements regarding these and other types of laboratory performance tests that should be followed.

The hydraulic conductivity of a soil is influenced by the particle size and gradation, the void ratio, mineral composition, and soil fabric. In general the hydraulic conductivity, or permeability, increases with increasing grain size; however, the size and shape of the voids also have a significant influence. The smaller the voids are, the lower the permeability. Mineral composition and soil fabric have little effect on the permeability of gravel, sand, and non-plastic silt, but are important for plastic silts and clays. Therefore, relationships between particle size and permeability are available for coarse-grained materials, some of which are presented in the Correlations subsection (Section 5.6.2). In general, for clays, the lower the ion exchange capacity of the soil, the higher the permeability. Likewise, the more flocculated (open) the structure, the higher the permeability.

The methods commonly used to determine the hydraulic conductivity in the laboratory include, the constant head test, the falling head test, and direct or indirect methods during a consolidation test. The laboratory tests for determining the hydraulic conductivity are generally considered quite unreliable. Even with considerable attention to test procedures and equipment design, tests may only provide values within an order of magnitude of actual conditions. Some of the factors for this are:

- The soil in-situ is generally stratified and this is difficult to duplicate in the laboratory.
- The horizontal value of k is usually needed, but testing is usually done on tube samples with vertical values obtained.

- In sand, the horizontal and vertical values of k are significantly different, often on the order of k_h = 10 to 100k_v.
- The small size of laboratory samples leads to boundary condition effects.
- Saturated steady-state soil conditions are used for testing, but partially saturated soil water flow often exists in the field.
- On low permeability soils, the time necessary to complete the tests causes evaporation and equipment leaks to be significant factors.
- The hydraulic gradient in the laboratory is often 5 or more to reduce testing time, whereas in the field it is more likely in the range of 0.1 to 2.

The hydraulic conductivity is expected to vary across the site; however, it is important to differentiate errors from actual field variations. When determining the hydraulic conductivity, the field and laboratory values should be tabulated along with the other known data such as sample location, soil type, grain-size distribution, Atterberg limits, water content, stress conditions, gradients, and test methods. Once this table is constructed, it will be much easier to group like soil types and k values to delineate distinct areas within the site, and eliminate potentially erroneous data.

5.8.3 Correlations to Estimate Engineering Properties of Soil

Correlations that relate in-situ index test results such as the SPT or CPT or laboratory soil index testing may be used in lieu of or in conjunction with performance laboratory testing and back-analysis of site performance data to estimate input parameters for the design of the geotechnical elements of a project. Since properties estimated from correlations tend to have greater variability than measurement using laboratory performance data (see Phoon et al., 1995), properties estimated from correlation to in-situ field index testing or laboratory index testing should be based on multiple measurements within each geologic unit (if the geologic unit is large enough to obtain multiple measurements). A minimum of 3 to 5 measurements should be obtained from each geologic unit as the basis for estimating design properties.

The drained friction angle of granular deposits estimated from SPT measurements shall be determined based on the correlation provided in Table 5-1.

$N1_{60}$ from SPT (blows/ft)	φ (o)
<4	25-30
4	27-32
10	30-35
30	35-40
50	38-43

Correlation of SPT N values to drained friction angle of granular soils (modified after Bowles, 1977 as reported in AASHTO 2012)

Table 5-1

The correlation used is modified after Bowles (1977). The correlation of Peck, Hanson and Thornburn (1974) falls within the ranges specified. Experience should be used to select specific values within the ranges. In general, finer materials, materials with significant silt-sized material, and materials in which the particles are rounded to sub-rounded will fall in the lower portion of the range. Coarser materials with less then 5% fines, and materials in which the particles are sub-angular to angular will fall in the upper portion of the range.

Care should be exercised when using other correlations of SPT results to soil parameters. Some published correlations are based on corrected values (N160) and some are based on uncorrected values (N). The designer shall ascertain the basis of the correlation and use either N160 or N as appropriate. Care shall also be exercised when using SPT blow counts to estimate soil shear strength for soils with gravel, cobbles, or boulders. Gravels, cobbles, or boulders could cause the SPT blow counts to be unrealistically high.

Correlations for other soil properties (other than as specifically addressed above for the soil friction angle) as provided in Sabatini et al. (2002) may be used if the correlation is widely accepted and if the accuracy of the correlation is known. However, such correlations shall not be extrapolated to estimate properties beyond the range of the empirical data used to establish the correlation. Care shall also be exercised when using correlations near the extremities of the empirical basis for the correlations, and the resulting additional uncertainty in the estimated properties shall be addressed in the design in which those properties are used. Local geologic formation-specific correlations may be used if well established by: (1) data comparing the prediction from the correlation to measured high quality laboratory performance data, or (2) back-analysis from full-scale performance of geotechnical elements affected by the geologic formation in question.

Regarding soil hydraulic conductivity, the correlations provided in the Highway Runoff Manual, should be used.

5.9 Engineering Properties of Rock

Engineering properties of rock are controlled by the discontinuities within the rock mass and the properties of the intact rock. Therefore, engineering properties for rock must account for the properties of the intact rock and for the properties of the rock mass as a whole, specifically considering the discontinuities within the rock mass. A combination of laboratory testing of small samples, empirical analysis, and field observations should be employed to determine the requisite engineering properties.

Rock properties can be divided into two categories: intact rock properties and rock mass properties. Intact rock properties are determined from laboratory tests on small samples typically obtained from coring, outcrops or exposures along existing cuts. Common engineering properties typically obtained from laboratory tests include specific gravity, point load strength, compressive strength, tensile strength, shear strength, modulus, and slake durability. Rock mass properties are determined by visual examination and description of discontinuities within the rock mass following the suggested methodology of the International Society of Rock Mechanics (ISRM 1978), and how these discontinuities will affect the behavior of the rock mass when subjected to the proposed construction and loading.

Point load tests should be calibrated to unconfined compression strength test results on the same rock type . Point load tests shall not be used for weak to extremely rock (R0, R1, and R2 rock) with uniaxial compressive strength less than 3600 psi (25 MPa).

The methodology and related considerations provided by Sabatini et al. (2002) should be used to assess the design properties for the intact rock and the rock mass as a whole. However, the portion of Sabatini et al. (2002) that addresses the determination of fractured rock mass shear strength parameters (Hoek and Brown 1988) using the Rock Mechanics Rating (RMR) system is outdated. The original work by Hoek and Brown has been updated and is described in Hoek et al. (2002). The updated method uses a Geological Strength Index (GSI) to characterize the rock mass for the purpose of estimating shear strength parameters, and has been developed based on re-examination of hundreds of tunnel and slope stability analyses in which both the 1988 and 2002 criteria were used and compared to field results. While the 1988 method has been more widely published in national (e.g., FHWA) design manuals than has the updated approach provided in Hoek et al. (2002), considering that the original developers of the method have recognized the short-comings of the 1988 method and have reassessed t through comparison to actual rock slope stability data, WSDOT considers the Hoek, et al. (2002) to be the most accurate methodology. Therefore the Hoek et al. (2002) method should be used for fractured rock mass shear strength determination. Note that this method is only to be used for fractured rock masses in which the stability of the rock slope, or rock surrounding the foundation is not structurally controlled. See Chapter 12 for additional requirements regarding the assessment of rock mass properties.

Some design methods were specifically developed using the older Hoek and Brown (1988) RMR method, such as the design of spread footings on rock in the AASHTO LRFD Bridge Design manual (specifically Article 10.6.3.2). In such cases, the older Hoek and Brown method shall be used until such time that the design procedure has been updated to use the newer GSI index method.

5.10 Determination and Use of Soil Cohesion

Soil cohesion is defined as shear strength resulting from inter-particle attraction effect that is independent of normal stress but varies considerably with water content and rate of loading (Bowles 1979).

The use of cohesion due to inter-particle attraction, such as occurs in clays and clayey silts, for design shall be considered cautiously for long-term design and in general shall not be fully relied upon for long-term loading, unless local experience indicates that a particular value of cohesion in a given geologic unit can be relied upon (note: evidence of that local experience, such as results from previous back-analyses that demonstrate good long-term performance can be reliably achieved, shall be included in the calculation package). If cohesion is used in such cases, it shall be a conservative lower bound value. It is especially important to not rely upon cohesive shear strength if displacement in the soil has occurred in the past or potentially could occur in the future, in fractured or fissured soil, or if moisture content changes over time could occur. In these cases, a drained cohesion value near zero shall be used. For short-term applications, such as in temporary cuts or walls, or during seismic loading, some soil cohesion may be considered for use in design, provided that potential displacement

and water content changes are adequately controlled or taken into account. To justify the use of cohesion where structures (e.g., anchored walls) are used to restrain or prevent soil deformation, a deformation analysis of the restraining system shall be conducted to demonstrate that the deformation will be adequately controlled.

Apparent cohesion is defined as the cohesion that results from surface tension due to moisture in unsaturated, but not dry, soils, primarily in sands and non-plastic silts. Apparent cohesion shall not be relied upon for the design of permanent works. For temporary works, apparent cohesion may only be used if the moisture content of the soils can be preserved or controlled and the magnitude of the apparent cohesion is conservatively assessed.

For sands and gravels with 10% fines or less by weight, cohesion shall not be relied upon for both short-term and long-term design situations, as in most cases, most of the cohesion that may be present is apparent cohesion, which is not a reliable source of shear strength.

5.11 Final Selection of Design Values

5.11.1 Overview

After the field and laboratory testing is completed, the geotechnical designer shall review the quality and consistency of the data, and shall determine if the results are consistent with expectations. Once the lab and field data have been collected, the process of final material property selection begins. At this stage, the geotechnical designer generally has several sources of data consisting of that obtained in the field, laboratory test results, and correlations from index testing. In addition, the geotechnical designer may have results of back- analyses, or have experience based on other projects in the area or in similar soil/rock conditions. Therefore, if the results are not consistent with each other or previous experience, the reasons for the differences shall be evaluated, poor data eliminated and trends in data identified. At this stage it may be necessary to conduct additional performance tests to try to resolve discrepancies.

As stated in Section 5.1, the focus of geotechnical design property assessment and final selection is on the individual geologic strata identified at the project site. A geologic stratum is characterized as having the same geologic depositional history, stress history, and degree of disturbance, and generally has similarities throughout the stratum in its density, source material, stress history, and hydrogeology. All of the information that has been obtained up to this point including preliminary office and field reconnaissance, boring logs, CPT soundings etc., and laboratory data are used to determine soil and rock engineering properties of interest and develop a subsurface model of the site to be used for design. Data from different sources of field and lab tests, from site geological characterization of the site subsurface conditions, from visual observations obtained from the site reconnaissance, from historical experience with the subsurface conditions at or near the site, and from the results of back- analyses shall be compared to determine the engineering properties for the various geologic units encountered throughout the site. If soil/rock data from nearby sites in the same or similar geologic unit are considered, site specific test data shall have priority in the selection of design parameters relative to non-site specific historical data for the geologic unit in question at the site.

Often, results from a single test (e.g. SPT N-values) may show significant scatter across a site for a given soil/rock unit. Perhaps data obtained from a particular soil unit for a specific property from two different tests (e.g. field vane shear tests and lab UU tests) do not agree. The validity and reliability of the data and its usefulness in selecting final design parameters shall be evaluated.

After a review of data reliability, a review of the variability of the selected parameters shall be carried out. Variability can manifest itself in two ways: 1) the inherent in-situ variability of a particular parameter due to the variability of the soil unit itself, and 2) the variability associated with estimating the parameter from the various testing methods. From this step, final selection of design parameters can commence, and from there completion of the subsurface profile.

5.11.2 Data Reliability and Variability

Inconsistencies in data shall be examined to determine possible causes and assess any mitigation procedures that may be warranted to correct, exclude, or downplay the significance of any suspect data. The following procedures provide a step-by-step method for analyzing data and resolving inconsistencies as outlined by Sabatini et al. (2002):

1) **Data Validation** – Assess the field and the laboratory test results to determine whether the reported test results are accurate and are recorded correctly for the appropriate material. For lab tests on undisturbed samples consider the effects of sample disturbance on the quality of the data. For index tests (e.g. grain size, compaction) make sure that the sample accurately represents the in-situ condition. Disregard or downplay potentially questionable results (e.g., test results that are potentially invalid due to sample disturbance, affected by recording errors, affected by procedural errors, etc.).

2) **Historical Comparison** – Assess results with respect to anticipated results based on site and/or regional testing and geologic history. If the new results are inconsistent with other site or regional data, it will be necessary to assess whether the new data is anomalous or whether the new site conditions differ from those from which previous data was collected. For example, an alluvial deposit might be expected to consist of medium dense silty sand with SPT blow counts of 30 or less. If much higher blow counts are recorded and the Standard Penetration tests were performed correctly, the reason could be the deposit is actually dense (and therefore higher friction angles can be assumed), or gravel may be present and is influencing the SPT data. Most likely it is the second case, and the engineering properties should probably be adjusted to account for this. But if consideration had not been given as to what to expect, values for properties might be used that could result in an unconservative design. If the reason for the difference between the new site specific test data and the historical data from nearby sites is not clear, then the site specific test data shall be given priority with regard to final selection of design parameters.

3) **Performance Comparison** – Assess results with respect to historic performance of structures at the site or within similar soils as described in Setion 5.7. Compare the results from the back-analyses to the properties determined from field and lab testing for the project site. The newly collected data should be correlated with the

parameters determined from observation of measurable performance and the field and lab tests performed for the previous project.

4) **Correlation Calibration** – If feasible, develop site-specific correlations using the new field and lab data. Assess whether this correlation is within the range of variability typically associated with the correlation based on previous historic data used to develop the generic correlation.

5) **Assess Influence of Test Complexity** – Assess results from the perspective of the tests themselves. Some tests may be easy to run and calibrate, but provide data of a "general" nature, while other tests are complex and subject to operator influence, yet provide "specific" test results. When comparing results from different tests consider which tests have proven to give more accurate or reliable results in the past, or more accurately approximate anticipated actual field conditions. For example, results of field vane shear tests may be used to determine undrained shear strength for deep clays instead of laboratory UU tests because of the differences in stress states between the field and lab samples, and disturbance resulting from the sampling and test specimen preparation. It may be found that certain tests consistently provide high or low values compared to anticipated results.

The result of these five steps is to determine whether or not the data obtained for the particular tests in question is valid. Where it is indicated that test results are invalid or questionable as determined through the five step process described above, the results should be downplayed or thrown out. If the test results are proven to be valid, the conclusion can be drawn that the soil unit itself and its corresponding engineering properties are variable (vertically, aerially, or both).

The next step is to determine the amount of variability that can be expected for a given engineering property in a particular geologic unit, and how that variability should influence the selection of the final design value. Sabatini et al. (2002) list several techniques that can be used:

1) **Experience** – In some cases the geotechnical designer may have accumulated extensive experience in the region such that it is possible to accurately select an average, typical or design value for the selected property, as well as the appropriate variability for the property.

2) **Statistics** – If a geotechnical designer has extensive experience in a region, or there has been extensive testing by others with published or available results, there may be sufficient data to formally establish the average value and the variability (mean and standard deviation) for the specific property. See Sabatini et al. (2002) and Phoon et al. (1995) for information on the variability associated with various engineering properties.

3) **Establish Best-Case and Worst-Case Scenarios** – Based on the experience of the geotechnical designer, it may be possible to establish upper and lower bounds along with the average for a given property.

5.11.3 Time Dependent Considerations

Properties of soil and rock can change over time (see Section 5.3). Examples of time dependent changes include, but are not limited to, the following:

- Material degradation due to weathering, moisture changes, etc.,
- Changes in properties such shear strength due to deformation,
- Changes resulting from short or long-term stress changes (e.g., removal of load due to excavation causing rebound)

When selecting soil and rock properties for design, the potential for these changes to occur during the life of the facility shall be addressed in the final selection of soil and rock properties. For example, if conducting a back analysis of a slope failure, especially if it is a first time slope failure, the back-analysis will determine the mobilized shear strength at the time the failure initiated and therefore may result in a value that is greater than the residual shear strength measured in laboratory testing or determined from correlations. The back-analyzed shear strength may therefore be greater than the shear strength along the post failure shear surface as well as the long-term shear strength that could occur in the future. In such cases, the shear strength that is representative of the long-term condition, i.e., the residual shear strength determined from the laboratory tests and correlations, should be selected for design.

5.11.4 Final Property Selection

Recognizing the variability discussed in the previous section, depending on the amount of variability estimated or measured, the potential impact of that variability (or uncertainty) on the level of safety in the design shall be assessed. If the impact of this uncertainty is likely to be significant, parametric analyses shall be conducted, or more data could be obtained to help reduce the uncertainty. Since the sources of data that could be considered may include measured laboratory data, field test data, performance data (i.e., from back-analyses), and other previous experience with the geologic unit(s) in question, it will not be possible to statistically combine all this data together to determine the most likely property value. Engineering judgment based on experience, combined with parametric analyses as needed, will be needed to make this final assessment and design property determination. At that point, a decision must be made as to whether the final design value selected should reflect the interpreted average value for the property, or a value that is somewhere between the most likely average value and the most conservative estimate of the property. However, the desire for design safety must be balanced with the cost effectiveness and constructability of the design. In some cases, being too conservative with the design could result in an un-constructible design (e.g., the use of very conservative design parameters could result in a pile foundation that must be driven deep into a very dense soil unit that in reality is too dense to penetrate with available equipment).

Note that in Chapter 8, where reliability theory was used to establish load and resistance factors, the factors were developed assuming that mean values for the design properties are used. However, even in those cases, design values that are more conservative than the mean may still be appropriate, especially if there is a significant amount of uncertainty in the assessment of the design properties due, for example, to highly variable site conditions, lack of high quality data to assess property values, or due to widely divergent property values from the different methods used to assess

properties within a given geologic unit. The consequence of failure should also bear on the determination of a design parameter. Depending on the availability of soil or rock property data and the variability of the geologic strata under consideration, it may not be possible to reliably estimate the average value of the properties needed for design. In such cases, the geotechnical designer will have no choice but to use a more conservative selection of design parameters to mitigate the additional risks created by potential variability or the paucity of relevant data. Note that for those resistance factors that were determined based on calibration by fitting to allowable stress design, consideration for potentially using an average property value is not relevant, and property selection should be based on the considerations discussed previously, which in most cases the property values shall be selected conservatively to be consistent with past practice.

The process and examples to make the final determination of properties to be used for design provided by Sabatini et al. (2002) shall be followed, subject to the specific requirements in the GDM. Local experience with certain engineered and naturally occurring geologic units encountered in the state of Washington is summarized in Sections 5.12 and 5.13. The final selection of design properties for the engineered and naturally occurring geologic units described in these two GDM sections shall be consistent with the experience cited in these two GDM sections.

The documentation required to justify the selection of design parameters is specified in Section 23.3.2.

5.11.5 Development of the Subsurface Profile

While Section 5.8 generally follows a sequential order, it is important to understand that the selection of design values and production of a subsurface profile is more of an iterative process. The development of design property values should begin and end with the development of the subsurface profile. Test results and boring logs will likely be revisited several times as the data are developed and analyzed before the relation of the subsurface units to each other and their engineering properties are finalized.

The ultimate goal of a subsurface investigation is to develop a working model that depicts major subsurface ESU's exhibiting distinct engineering characteristics. The end product is the subsurface profile, a two dimensional or, if necessary, a three dimensional depiction of the site stratigraphy. The following steps outline the creation of the subsurface profile:

1) Complete the field and lab work and incorporate the data into the preliminary logs.
2) Lay out the logs relative to their respective field locations and compare and match up the different soil and rock units at adjacent boring locations, if possible. However, caution should be exercised when attempting to connect units in adjacent borings, as the stratigraphy commonly is not linear or continuous between borings. Field descriptions and engineering properties will aid in the comparisons.
3) Group, or possibly split up, the subsurface geologic strata based on engineering properties to create ESU's.
4) Create cross sections by plotting borings at their respective elevations and positions horizontal to one another with appropriate scales. If appropriate, two cross sections should be developed that are at right angles to each other so that lateral trends in stratigraphy can be evaluated when a site contains both lateral and transverse extents (i.e. a building or large embankment).

5) Analyze the profile to see how it compares with expected results and knowledge of geologic (depositional) history. Have anomalies and unexpected results encountered during exploration and testing been adequately addressed during the process? Make sure that all of the subsurface features and properties pertinent to design have been addressed.

5.12 Selection of Design Properties for Engineered Materials

This section provides guidelines for the selection of properties that are commonly used on WSDOT projects such as engineered fills. The engineering properties are based primarily on gradation and compaction requirements, with consideration of the geologic source of the fill material typical for the specific project location. For materials such as common borrow where the gradation specification is fairly broad, a wider range of properties will need to be considered.

Common Borrow – Per the WSDOT *Standard Specifications*, common borrow may be virtually any soil or aggregate either naturally occurring or processed which is substantially free of organics or other deleterious material, and is non-plastic. The specification allows for the use of more plastic common borrow when approved by the engineer. On WSDOT projects this material will generally be placed at 90 percent (Method B) or 95 percent (Method C) of Standard Proctor compaction. Because of the variability of the materials that may be used as common borrow, the estimation of an internal friction angle and unit weight should be based on the actual material used. A range of values for the different material properties is given in Table 5-2. Lower range values should be used for finer grained materials compacted to Method B specifications. In general during design, the specific source of borrow is not known. Therefore, it is not prudent to select a design friction angle that is near or above the upper end of the range unless the geotechnical designer has specific knowledge of the source(s) likely to be used, or unless quality assurance shear strength testing is conducted during construction. Depending on location, common borrow will may have a fines content sufficient to be moisture sensitive. This moisture sensitivity may affect the design property selection if it is likely that placement conditions are likely to be marginal due to the timing of construction.

Select Borrow – The requirements for select borrow ensure that the mixture will be granular and contain at least a minimal amount of gravel-size material. The materials are likely to be poorly graded sand and contain enough fines to be moderately moisture sensitive (the specification allows up to 10 percent fines). Select Borrow is not an all weather material. Triaxial or direct shear strength testing on material that meets Select Borrow gradation requirements indicates that drained friction angles of 38 to 45 degrees are likely when the soil is well compacted. Even in it loosest state, shear strength testing of relatively clean sands meeting Select Borrow requirements has indicated values of 30 to 35 degrees. However, these values are highly dependent on the geologic source of the material. Surficial deposits that particles which have been minimally transported/reworked (i.e. colluvium, some glacial deposits) can have more subangular to angular soil particles and hence, high shear strength values. Windblown, beach, or alluvial sands that have been rounded through significant transport could have significantly lower shear strength values. Left-overs from processed materials (e.g., scalpings) could also have relative low friction angles depending on the uniformity of the material and the degree of rounding in the soil particles. A range

of values for shear strength and unit weight based on previous experience for well compacted Select Borrow is provided in Table 5-2. In general, during design the specific source of borrow is not known. Therefore, it is not prudent to select a design friction angle that is near or above the upper end of the range unless the geotechnical designer has specific knowledge of the source(s) likely to be used or unless quality assurance shear strength testing is conducted during construction. Select Borrow with significant fines content may sometimes be modeled as having a temporary or apparent cohesion value from 50 to 200 psf, subject to the requirements for the use of cohesion as specified in Section 5.10. If a cohesion value is used, the friction angle should be reduced so as not to increase the overall strength of the material. For long-term analysis, all the borrow material should be modeled with no cohesive strength.

Gravel Borrow – The gravel borrow specification should ensure a reasonably well graded sand and gravel mix. Because the fines content is under 7 percent, the material is only slightly moisture sensitive. However, in very wet conditions, material with lower fines content should be used. Larger diameter triaxial shear strength testing performed on well graded mixtures of gravel with sand that meet the Gravel Borrow specification indicate that very high internal angles of friction are possible, approaching 50 degrees, and that shear strength values less than 40 degrees are not likely. However, lower shear strength values are possible for Gravel Borrow from naturally occurring materials obtained from non-glacially derived sources such as wind blown or alluvial deposits. In many cases, processed materials are used for Gravel Borrow, and in general, this processed material has been crushed, resulting in rather angular particles and very high soil friction angles. Its unit weight can approach that of concrete if very well graded. A range of values for shear strength and unit weight based on previous experience is provided in Table 5-2. In general during design the specific source of borrow is not known. Therefore, it is not prudent to select a design friction angle that is near or above the upper end of the range unless the geotechnical designer has specific knowledge of the source(s) likely to be used or unless quality assurance shear strength testing is conducted during construction.

Gravel Backfill for Walls – Gravel backfill for walls is a free draining material that is generally used to facilitate drainage behind retaining walls. This material has similarities to Gravel Borrow, but generally contains fewer fines and is freer draining. Gravel backfill for Walls is likely to be a processed material and if crushed is likely to have a very high soil friction angle. A likely range of material properties is provided in Table 5-2.

Material	WSDOT Standard Specification	Soil Type (USCS classification)	φ (degrees)	Cohesion (psf)	Total Unit Weight (pcf)
Common Borrow	9-03.14(3)	ML, SM, GM	30 to 34	0	115 to 130
Select Borrow	9-03.14(2)	GP, GP-GM, SP, SP-SM	34 to 38	0	120 to 135
Gravel Borrow	9-03.14(1)	GW, GW-GM, SW, SW-SM	36 to 40	0	130 to 145
Gravel Backfill for Walls	9-03.12(2)	GW, GP, SW, SP	36 to 40	0	125 to 135

Presumptive Design Property Ranges for Compacted Borrow and Other WSDOT *Standard Specification* Materials
Table 5-2

Rock Embankment – Embankment material is considered rock embankment if 25 percent of the material is over 4 inches in diameter. Compactive effort is based on

a method specification. Because of the nature of the material, compaction testing is generally not feasible. The specification allows for a broad range of material and properties such that the internal friction angle and unit weight can vary considerably based on the amount and type of rock in the fill. Rock excavated from cuts consisting of siltstone, sandstone and claystone may break down during the compaction process, resulting in less coarse material. Also, if the rock is weak, failure may occur through the rock fragments rather than around them. In these types of materials, the strength parameters may resemble those of earth embankments. For existing embankments, the soft rock may continue to weather with time, if the embankment materials continue to become wet. For embankments constructed of sound rock, the strength parameters may be much higher. For compacted earth embankments with sound rock, internal friction angles of up to 45 degrees may be reasonable. Unit weights for rock embankments generally range from 130 to 140 pcf.

Quarry Spalls and Rip Rap – Quarry spalls, light loose rip rap and heavy loose rip rap created from shot rock are often used as fill material below the water table or in shear keys in slope stability and landslide mitigation applications. WSDOT Standard Specification Section 9-13 provides minimum requirements for degradation and specific gravity for these materials. Therefore sound rock must be used for these applications. For design purposes, typical values of 105 to 120 pcf for the unit weight (this considers the large amount of void space due to the coarse open gradation of this type of material) and internal angles of friction of about 40 to 45 degrees should be used.

Wood Fiber – Wood fiber fills have been used by WSDOT for over 30 years in fill heights up to about 40 feet. The wood fiber has generally been used as light-weight fill material over soft soil to improve embankment stability. Wood fiber has also been used in emergency repair because rain and wet weather does not affect the placement and compaction of the embankment. Only fresh wood fiber should be used to prolong the life of the fill, and the maximum particle size should be 6 inches or less. The wood fiber is generally compacted in lifts of about 12 inches with two passes of a track dozer. Presumptive design values of 50 pcf for unit weight and an internal angle of friction of about 40 degrees may be used for the design of the wood fiber fills (Allen et al., 1993).

To mitigate the effects of leachate, the amount of water entering the wood should be minimized. Generally topsoil caps of about 2 feet in thickness are used. The pavement section should be a minimum of 2 feet (a thicker section may be needed depending on the depth of wood fiber fill). Wood fiber fill will experience creep settlement for several years and some pavement distress should be expected during that period. Additional information on the properties and durability of wood fiber fill is provided in Kilian and Ferry (1993).

Geofoam – Geofoam has been used as lightweight fill on WSDOT projects since 1995. Geofoam ranges in unit weight from about 1 to 2 pcf. Geofoam constructed from expanded polystyrene (EPS) is manufactured according to ASTM standards for minimum density (ASTM C 303), compressive strength (ASTM D 1621) and water absorption (ASTM C 272). Type I and II are generally used in highway applications. Bales of recycled industrial polystyrene waste are also available. These bales have been used to construct temporary haul roads over soft soil. However, these bales should not be used in permanent applications.

5.13 Properties of Predominant Geologic Units in Washington

This section contains a brief discussion of soil and rock types common to Washington state that have specific engineering properties that need consideration.

5.13.1 Loess

Loess is a windblown (eolian) soil consisting mostly of silt with minor amounts of sand and clay (Higgins et al., 1987). Due to its method of deposition, loess has an open (honeycomb) structure with very high void ratios. The clay component of loess plays a pivotal role because it acts as a binder (along with calcium carbonate in certain deposits) holding the structure together. However, upon wetting, either the water soluble calcium carbonate bonds dissolve or the large negative pore pressures within the clay that are holding the soil together are reduced and the soil can undergo shear failures and/or settlements.

Loess deposits encompass a large portion of southeastern Washington. Loess typically overlies portions of the Columbia River Basalt Group and is usually most pronounced at the tops of low hills and plateaus where erosion has been minimal (Joseph, 1990). Washington loess has been classified into four geologic units: Palouse Loess, Walla Walla Loess, Ritzville Loess, and Nez Perce Loess. However, these classifications hold little relevance to engineering behavior. For engineering purposes loess can generally be classified into three categories based on grain size: clayey loess, silty loess, and sandy loess (see Chapter 10).

Typical index and performance properties measured in loess are provided in Table 5-3, based on the research results provided in Report WA-RD 145.2 (Higgins and Fragazy, 1988). Density values typically increase from west to east across the state with corresponding increase in clay content. Higgins and Fragaszy observed that densities determined from Shelby tube samples in loess generally result in artificially high values due to disturbance of the open soil structure and subsequent densification. Studies of shear strength on loess have indicated that friction angles are usually fairly constant for a given deposit and are typically within the range of 27 to 29 degrees using CU tests. These studies have also indicated that cohesion values can be quite variable and depend on the degree of consolidation, moisture content and amount of clay binder. Research has shown that at low confining pressures, loess can lose all shear strength upon wetting.

Type of Loess	Liquid Limit	Plasticity Index	Dry Density (pcf)	Angle of Internal Friction (o)
Clayey	33 to 49	11 to 27	70 to 90, with maximum of up to 95 to 98 (generally increases with clay content)	27 to 29 from CU tests
Silty	14 to 32	0 to 11		
Sandy	Nonplastic	Nonplastic		

Typical Measured Properties For Loess Deposits in Washington State
Table 5-3

The possibility of wetting induced settlements shall be considered for any structure supported on loess by performing collapse tests. Collapse tests are usually performed as either single ring (ASTM D 5333) or double ring tests. Double ring tests have the advantage in that potential collapse can be estimated for any stress level. However, two identical samples must be obtained for testing. Single ring tests have the advantage in that they more closely simulate actual collapse conditions and thus give a more accurate estimate of collapse potential. However, collapse potential can only be estimated for a particular stress level, so care must be taken to choose an appropriate stress level for sample inundation during a test. When designing foundations in loess, it is important to consider long term conditions regarding possible changes in moisture content throughout the design life of the project. Proper drainage design is crucial to keeping as much water as possible from infiltrating into the soil around the structure. A possible mitigation technique could include overexcavation and recompaction to reduce or eliminate the potential for collapse settlement.

Loess typically has low values of permeability and infiltration rates. When designing stormwater management facilities in loess, detention ponds should generally be designed for very low infiltration rates.

Application of the properties of loess to cut slope stability is discussed in Chapter 10.

5.13.2 Peat/Organic Soils

Peats and organic soils are characterized by very low strength, very high compressibility (normally or slightly under-consolidated), low hydraulic conductivity, and having very important time-consolidation effects. Often associated with wetlands, ponds and near the margins of shallow lakes, these soils pose special challenges for the design of engineering transportation projects. Deep deposits (+100 feet in some cases) with very high water content, highly compressibility, low strength and local high groundwater conditions require careful consideration regarding settlement and stability of earth fill embankments, support for bridge foundations, and locating culverts.

The internal structure of peat, either fibrous or granular, affects its capacity for retaining and releasing water and influences its strength and performance. With natural water content often ranging from 200-600 percent (over 100 for organic silts and sands) and wet unit weight ranging from 70 to 90 pcf, it can experience considerable shrinkage (>50%) it dries. Rewetting usually cannot restore its original volume or moisture content. Under certain conditions, dried peat will oxidize and virtually disappear. Undisturbed sampling for laboratory testing is difficult. Field vane testing is frequently used to evaluate in place shear strength, though in very fibrous peats, reliable shear strength data is difficult to obtain even with the field vane shear test. Initial undisturbed values of 100 to 400 psf are not uncommon but remolded (residual) strengths can be 30 to 50 % less (Schmertmann, 1967). Vane shear strength, however, is a function of both vane size and peat moisture content. Usually, the lower the moisture of the peat and the greater its depth, the higher is its strength. Strength increases significantly when peat is consolidated, and peak strength only develops after large deformation has taken place. Due to the large amount of strain that can occur when embankment loads are placed on peats and organic soils, residual strengths may control the design.

Vertical settlement is also a major concern for constructing on organic soils. The amount of foundation settlement and the length of time for it to occur are usually estimated from conventional laboratory consolidation tests. Secondary compression can be quite large for peats and must always be evaluated when estimating long-term settlement. Based on experience in Washington State, compression index values based on vertical strain ($C_{c\varepsilon}$) typically range from 0.1 to 0.3 for organic silts and clays, and are generally above 0.3 to 0.4 for peats. The coefficient of secondary compression ($C_{\alpha\varepsilon}$) is typically equal to $0.05C_{c\varepsilon}$ to $0.06C_{c\varepsilon}$ for organic silts and peats, respectively.

5.13.3 Glacial Deposits

Till – Till is an unsorted and unstratified accumulation of glacial sediment deposited directly by glacial ice. Till is a heterogeneous mixture of different sized material with particle sizes ranging in size from clay to boulders. Although the matrix proportions of silt and clay vary from place to place, the matrix generally consists of silty sand or sandy silt (Troost and Booth, 2003). Tills in Washington are deposited by either continental glaciers or alpine glaciers. Many of the tills in Washington, especially those associated with continental glaciers, have been overridden by the advancing continental ice sheet and are highly over consolidated, but not all tills have been consolidated by glacial ice. Tills deposited by alpine glaciers are most commonly found in and along the valley margins of the Olympic Mountains and Cascade Range, and are commonly not over consolidated.

Glacial till is often found near the surface in the Puget Sound Lowland area. The Puget Sound Lowland is a north-south trending trough bordered by the Cascade Mountains to the east and the Olympic Mountains to the west. The most recent glaciation, the Vashon Stade of the Fraser Glaciation occupied the Puget Sound region between roughly 18,000 to 13,000 years ago. Glacial till deposited by this glaciation extends as far south as the Olympia area.

Till that has been glacially overridden generally has very high unit weights and very high soil strength even when predominantly fine grained. Because if its inherent strength and density, it provides good bearing resistance, has very small strain under applied loads, and exhibits good stand up times even in very steep slopes. Typicall properties for glacially overridden tills range from 40 to 45 degrees for internal friction angle with cohesion values of 100 to 1,000 psf. Unit weights used for design are typically in the range of 130 to 140 pcf for glacially overridden till. The cohesion component of the shear strength can typically be relied upon due to the relatively high fines content of this geologic unit combined with its heavily overconsolidated nature and locked in stress history. Furthermore, very steep, high exposures of till in the Puget Sound region have demonstrated long-term stability that cannot be explained without the presence of significant soil cohesion, verifying the reliability of this soil cohesion. However, where these till units are exposed, the upper 2 to 5 feet is often weathered and is typically medium dense to dense. The glacial till generally grades to dense to very dense below the weathered zone. This upper weathered zone, when located on steep slopes, has often been the source of slope instability and debris flows during wet weather. Glacial till that is exposed as a result of excavation, slope instability, or other removal of overlying material will degrade and lose strength with weathering. If the till unit is capped with a younger deposit and had been previously weathered, weathered till zones can be present at depth as well.

The dense nature of glacially overriden till tends to make excavation and pile installation difficult. It is not uncommon to have to rip till with a dozer or utilize large excavation equipment. Permeability in till is relatively low because of the fines content and the density. However, localized pockets and seams of sand with higher permeability that may also be water bearing are occasional encountered in till units. These localized pockets and seams may contribute slope stability problems.

Till that has not been glacially overridden and over consolidated should be treated as normally consolidated materials consistent with the till's grain size distribution. Accordingly, tills that tend to be finer grained will exhibit lower strength and higher strain than tills which are skewed toward the coarser fraction.

Wet weather construction in till is often difficult because of the relatively high fines content of till soils. When the moisture content is more than a few percent above the optimum moisture content and the till is disturbed or unconfined, till soils become muddy and unstable, and operation of equipment on these soils can become difficult. Within till cobble and boulder-sized material can be encountered at any time. Boulders in till deposits can range from a foot or two in diameter to tens of feet. In some areas cobble, boulders, and cobble/boulder mixtures can be nested together, making excavation very difficult.

Outwash – Outwash is a general term for sorted sediment that has been transported and deposited by glacial meltwater, usually in a braided stream environment. Typically, the sediment becomes finer grained with increasing distance from the glacier terminus.

Outwash tends to be more coarse grained and cleaner (fewer fines) than till. When it has been overridden by advancing ice, its strength properties are similar to till, but the cohesion is much lower due to a lack of fines, causing this material to have greater difficulty standing without raveling in a vertical cut, and in general can more easily cave in open excavations or drilled holes. Typically, the shear strength of glacially overridden (advance) outwash ranges from 40 to 45 degrees, with near zero cohesion for clean deposits. Since it contains less fines, it is more likely to have relatively high permeability and be water bearing. In very clean deposits, non-displacement type piles (e.g., H-piles) can "run" despite the very dense nature of the material.

Outwash that has not been glacially overridden may be indistinguishable from alluvial deposits. When normally consolidated outwash is encountered it exhibits strengths, densities, and other physical properties that are consistent with alluvium, with friction angles generally less than 40 degrees and little or no cohesion.

Within outwash, cobble and boulder-sized material can be encountered at any time. Boulders in outwash deposits can range from a foot or two in diameter to tens of feet. In some areas cobbles, boulders, and cobble/boulder mixtures can be nested together, making excavation very difficult.

Glacial Marine Drift (GMD) – Drift is a collective term used to describe all types of glacial sedimentary deposits, regardless of the size or amount of sorting. The term includes all sediment that is transported by a glacier, whether it is deposited directly by a glacier or indirectly by running water that originates from a glacier. In the Pacific Northwest, practitioners have commonly referred to fine-grained glacial sediments deposited in marine water as Glacial Marine Drift, or sometimes just Marine Drift.

In addition to sand and fine-grained materials, glacial marine drift contains variable amounts of clastic debris from melting icebergs, floating ice, and gravity currents. Most commonly glacial marine drift consists of poorly graded granular material within a clayey matrix. Composition varies from gravelly, silty sand with a trace of clay to silty sand and silty clay with varying percentages of sand and gravel. Because of the marine environment, it can contain shell and wood fragments, and occasional cobbles and boulders.

In and around Bellingham, the glacial marine drift typically consists of unsorted, unstratified silt and clay with varying amounts of sand, gravel, cobbles and occasional boulders, with small percentages of shells and wood. It is typically found at the surface or below Holocene age deposits. The upper portion of this unit, sometimes to about 15 feet of depth, can be quite stiff as a result of desiccation or partial ice contact in upland areas. This stiffer desiccated zone typically grades from medium stiff to very soft with depth. The entire glaciomarine drift profile can be stiff when only a thin section of the drift mantles bedrock at shallow depths. Conversely, the entire profile is typically soft in the Blaine area and can be soft when in low, perennially saturated areas. This geologic unit can be very thick (150 feet or more).

The properties of this unit are extremely variable, varying as a function of location, depth, loading history, saturation and other factors. The soft to medium stiff glaciomarine drift typically has very low shear strength, very low permeability and high compressibility. Based on vane shear and laboratory testing of this unit, the soft portion of this unit below the stiff crust typically has undrained shear strengths of approximately 500 to 1000 psf, and can be as low as 200 to 300 psf. The upper stiff crust is typically stronger, and may be capable of supporting lightly loaded footing supported structures. Atterberg limits testing will typically classify the softer material as a low plasticity clay; although, it can range to high plasticity. Consolidation parameters are variable, with the compression index (CC) in the range of 0.06 to over 0.2. Time rates of consolidation can also be quite variable.

Wet weather construction in glaciomarine drift is very difficult because of the relatively high clay content of these soils. When the moisture content of these soils is more than a few percent above the optimum moisture content, they become muddy and unstable, and operation of equipment can become very difficult. Localized sandy and gravelly layers in the drift can be saturated and are capable of producing significant amounts of water in cuts.

Glaciolacustrine – Glaciolacustrine deposits form in glacial meltwater lakes that may occur during both advancing and recessional glacial episodes. Glaciolacustrine deposits are commonly stratified and tend to be fine grained, typically consisting of silt and clay and often with sand laminae. Glaciolacustrine deposits accumulated during glacial advances may be overridden by the ice, causing the deposits to be highly overconsolidated and typically very stiff to hard. An example of glacially overridden undisturbed laminated silt/clay deposits is provided in Figure 5-1. When not glacially overridden, such as during the last glacial recessional period, glaciolacustrine deposits may behave similarly to other normally consolidated lacustrine deposits.



Example of Glacially Overridden Laminated Clay Exposed in Highway Excavation on Beacon Hill Near The Intersection SR-5 and SR-90
Figure 5-1

Fine-grained, glacially overridden deposits are widespread in the Puget Sound region, and have been encountered on projects in the Seattle area in the vicinity of SR-5, SR-90, SR-99, SR-405, and SR-520. These fine-grained deposits may be glaciolacustrine in origin associated with one of the more than six continental glaciations that have inundated the region during the Pleistocene. In the Seattle area, the most recent (Vashon Stade) of these advance glaciolacustrine units are named the Lawton Clay. This deposit can be more than 150 feet thick in the Seattle area (Troost and Booth, 2003). Additionally, fine-grained bedded units may be associated with interglacial periods (i.e., Olympia Beds) that may be somewhat similar in initial appearance to glaciolacustrine deposits. The widespread presence in the Seattle area of both glacial and interglacial, fine-grained, overconsolidated deposits has led many geotechnical practitioners to refer to any such deposit as "Seattle clay", often irrespective of its age or origin. Collectively, these fine-grained overconsolidated deposits are often a primary material affecting engineering design in the Seattle area.

Extensive disturbance of these fine-grained, overconsolidated deposits is commonly observed, evidenced by fracturing and slickensides. A slickenside is a condition in which relative movement has occurred along the fracture, and is discernible by its shiny and commonly striated fracture surface. More extreme disturbance may involve disoriented/transported blocks within a matrix of intensely sheared and fractured silt and clay.

There are a variety of causes that may lead to post-depositional disturbance of these glaciolacustrine deposits. Vertical stresses and subsequent dewatering and consolidation through ice loading can induce fracturing, sometimes producing predictable fracture sets/networks. Lateral stresses induced by ice movement/flow can cause considerable deformation, shearing and translational movements (sometimes termed "shoving") within the underlying sediments, a process referred to as glaciotectonics (e.g., Figure 5-2). Following deglaciation, stress relief associated with unloading, isostacy, exhumation, and erosion can induce further fracturing within the sediments. Another post-depositional disturbance mechanism causing extensive fracturing and disturbance of these deposits is landsliding on exposed slopes that occurred between glacial episodes and following the last glaciation. Figure 5-3 shows a tilted laminated clay block that was overridden and smeared by a subsequent glacial advance. Figure 5-4 shows a deep (approximately 40 feet) test pit exposing layers of weathered clay, water-bearing gravel, and unweathered clay, illustrating the highly variable structure and depositional environment that can occur in these reconsolidated landslide deposits. These reconsolidated landslide deposits, in particular, can become highly unstable when exposed in excavations or natural slopes. Ground motions and crustal deformation induced by regionally active tectonic processes are another source of disturbance to these deposits.



Figure 5-2(a)



Exposure Near the East End of Sr-520 Illustrating Fractured and Sheared Structure Within Glacially Overridden Clay Deposit Believed to be Due to Glaciotectonics (a) Overview of Exposure, (b) Close-Up Showing Clay Structure

Figure 5-2(b)



Example on Beacon Hill of Highly Disturbed Glacially Overconsolidated Clay Associated with a Paleolandslide Deposit; Note Near-Vertical Orientation of Laminae/Bedding Within the Landslide Block
Figure 5-3



Test Pit on Beacon Hill Showing Depositional Sequence Within a Glacially Overconsolidated Clay, Paleolandslide Deposit
Figure 5-4

One of the most important geotechnical characteristics of these fine-grained overconsolidated deposits is that they generally have high in situ lateral stresses. Relaxation of these locked in stresses have created significant slope stability problems in both open and shored excavations. As excavations are completed, these deposits experience a lateral elastic rebound, which leads to their internal weakening. The failure mechanism is thought to consist of shear movement and/or tensional opening along pre-existing fractures. Depending on the extent of disturbance, failure surfaces/ zones may need to shear along existing fractures and through intact clay blocks to fully develop. Linkage of fractures and subsequent hydrostatic pressure buildup within them can then further displace larger blocks/masses. With movement comes a drastic reduction in shear strength (often to a residual state) within these larger blocks/ masses, which then lead to progressive slope failures. Such instability occurred in the downtown Seattle area when cuts were made within these deposits to construct Interstate 5 and Interstate 90. Fine, water-bearing sand laminae within the silts and clays often further exacerbate instability in exposures, not only in open cuts, but also in the form of caving in relatively small diameter shaft excavations.

Based on considerable experience, the long-term design of project geotechnical elements affected by these fine-grained overconsolidated deposits should be based on residual strength parameters. However, exceptions to this are provided in the paragraphs that follow.

For these deposits, the relationship between the residual friction angle and the plasticity index as reported in NAVFAC DM7 generally works well for estimating the residual shear strength (see Figure 5-5). The Stark and Hussain (2013) correlations for residual strength (see Figure 5-6) also work well for these deposits. In practice, shear strength values that have been estimated based on back-analysis of landslides and cut slope failures in this region are in the range of 13 to 17 degrees.

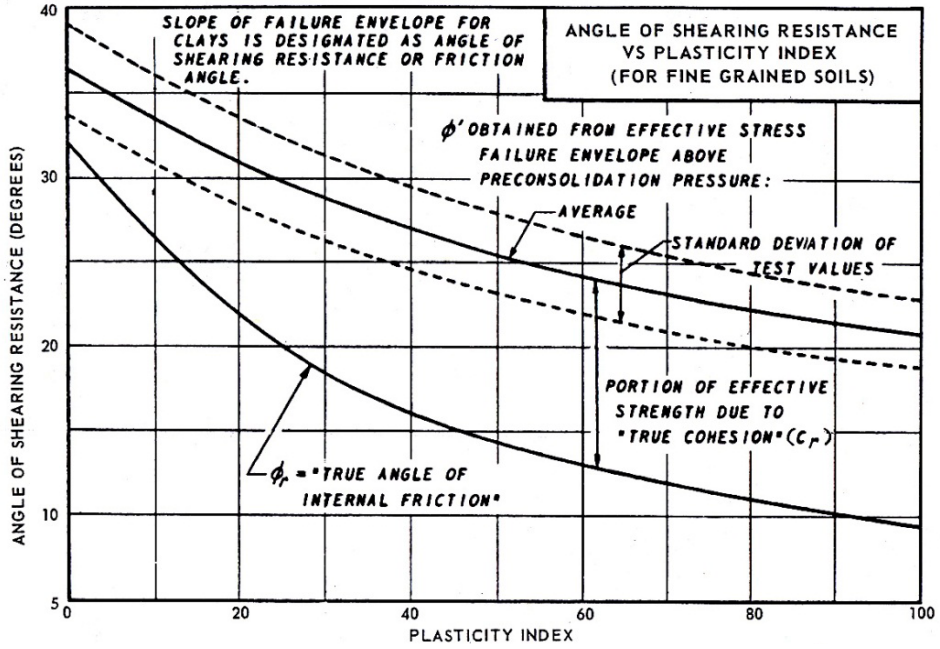

Correlation Between Residual Shear Strength of Overconsolidated Clays and Plasticity Index (After NAVFAC, 1971)
Figure 5-5

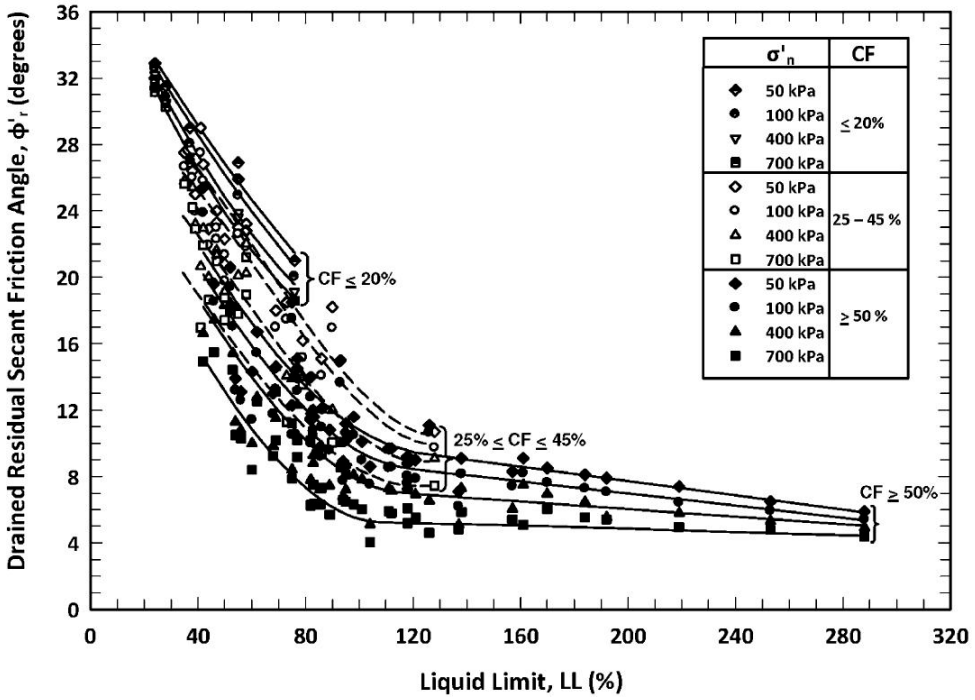

Correlation Between Residual Shear Strength of Overconsolidated Clays and Plasticity Index, Clay Fraction Cf, and Effective Normal Stress (After Stark and Hussain 2013)
Figure 5-6

Correlations with index soil properties such as the plasticity index, such as shown in Figure 5-5, or such as provided in Stark and Hussain (2013) in Figure 5-6, can be used to estimate the residual shear strength of soil. Laboratory tests on the site specific soils should be conducted, if possible, to measure the residual friction angle. When laboratory shear strength tests are conducted to determine the residual friction angle, high displacement tests such as the ring shear test should be used.

Designing for residual shear strength of the clay is a reasonable and safe approach in these fine-grained glacially consolidated soils, and is the default approach in post-depositionally disturbed deposits of fine-grained glacially consolidated soil, though there may be limited cases where a slightly higher shear strength could be used for design. For example, the glacially overridden clay deposits described earlier (e.g., figures 5-2 through 5-4) have been broken up enough to warrant the use of residual shear strength in most cases. If more detailed investigation is conducted (e.g., through back-analysis of previous slope failures or marginally stable slopes at the site in question, extensive laboratory shear strength testing, other possible testing or evaluation techniques, and consideration of site geological history of the strata in question) and demonstrates the shear strength of the existing deposit is greater than its residual value, higher design shear strengths may be justified, provided that any potential future deformation of the clay strata is prevented. In no case, however, in these glaciolacustrine deposits that have been post-depositionally disturbed due to phenomenon such as landsliding, glacial shoving, and shearing due to fault activity, shall a shear strength greater than the fully softened shear strength be used for design, even if future deformation of the clay deposit can be fully restrained. This applies to both temporary and permanent designs.

Note that the fully softened friction angle for clays is defined in Mesri and Shahien (2003) as:

"The fully softened strength envelope (often defined for stiff clays and shales by peak strength of reconstituted normally consolidated specimens) …."

In essence, this fully softened shear strength reflects the strength of an overconsolidated clay that has been disturbed, but the "plate-shaped" clay particles have not been fully aligned. This is in contrast to the situation in which a clay has been sufficiently sheared to reach a state of residual strength, such as along a landslide failure surface or along slickensides, in which all the clay particles have been aligned, producing the lowest possible shear strength.

Stark and Hussain (2013) provide recommended correlations to estimate the fully softened shear strength (see Figure 5-7) that should be used to estimate the fully softened shear strength, if laboratory site specific shear strength test data are not available. Alternatively, laboratory testing could be conducted to establish the fully softened shear strength. Guidelines regarding the type of laboratory testing required are provided in Stark, et al. (2005), and additional considerations for laboratory testing are provided in Stark and Hussain (2013).

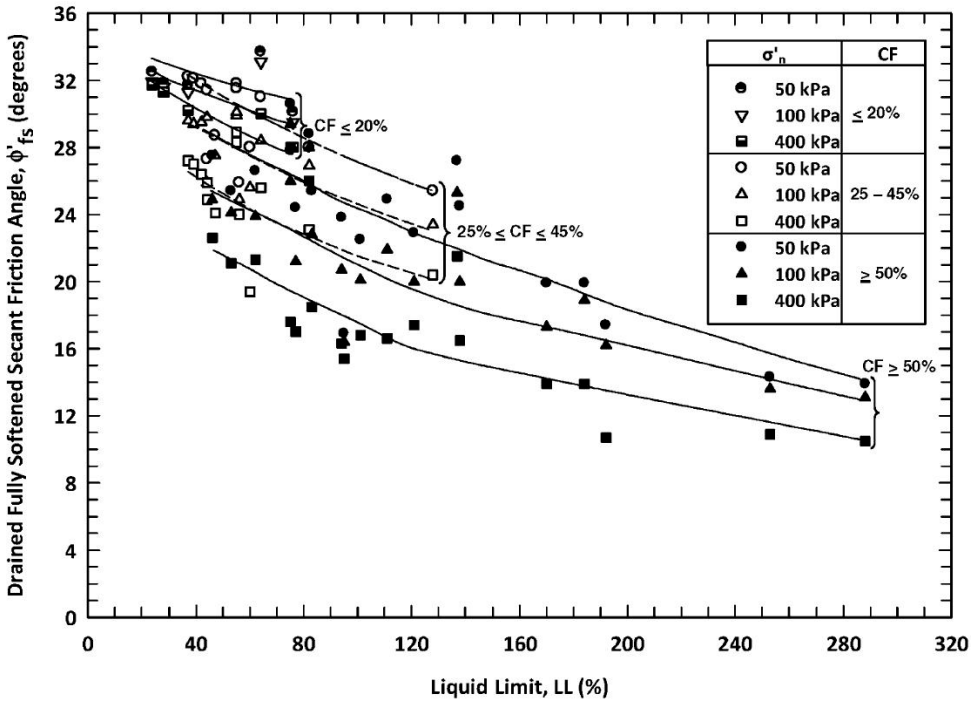

Correlation Between Fully Softened Shear Strength of Overconsolidated Clays and Plasticity Index (After Stark and Hussain 2013)
Figure 5-7

Intact deposits of glacially overridden clays and clayey silts (i.e., those not subjected to the geologic disturbance processes described previously) may be designed for shear strengths approaching their peak values provided that (1) the clay has not been subject to deformation resulting from previous construction or erosion that caused unloading of the clay, or (2) the clay is deep enough to not be affected and will not be subject to unloading and deformation in the planned construction. Structures (e.g., tieback walls) designed to restrain the clay to prevent deformation may be used in combination with

shear strengths near their peak values if previous construction that could potentially have caused removal/unloading of the clay has not occurred prior to the construction of the restraining structure. Otherwise, residual shear strength should be used for design within the clay. Intact glacially overridden clay that is deep enough below the final ground surface to not be affected by potential unloading may be designed for shear strength near its peak value.

As with most fine grained soils, wet weather construction in overconsolidated silt/clay is generally difficult. When the moisture content of these soils is more than a few percent above the optimum moisture content, they become muddy and unstable, and operation of equipment on these soils can become difficult.

Groundwater modeling of these glacially overridden clays can be very complex. Where below the groundwater surface, these clays may visually appear moist or dry. However, even with that appearance these clays can be saturated. Because they are fine grained and highly compact, water generally does not freely flow from these soils. More freely flowing ground water may be present in these deposits in localized or thin sand or gravel seams (e.g., Figure 5-4), between laminations in the clay, and within fissures in the clay, whereas the intact portions of the clay appear to be moist. The water within these fissures and sand or gravel seams is often hydraulically connected, having a similar effect with regard to stresses and stability as occurs in fractured rock masses that contain water. Due to the nature of the clay and the tendency of the clay surfaces within boreholes to become smeared during drilling, standard standpipe piezometers may take a very long time to stabilize adequately to get accurate water level readings – electrical piezometers, such as vibrating wire, should be used to get more accurate water level readings within a reasonable period of time.

Even though this geologic deposit is generally fine-grained, due to the highly overconsolidated nature of this deposit, settlement can generally be considered elastic in nature, and settlement, for the most part, occurs as the load is applied. This makes placement of spread footings on this deposit feasible if designed for relatively low bearing stress, and provided the footing is not placed on a slope that could allow an overall stability failure due to the footing load (see Chapter 8).

For additional discussion on geotechnical characterization and design in glacially overconsolidated clays, see Mesri and Shahien (2003) and Stark, et al. (2005).

5.13.4 Colluvium and Talus

Colluvium is a general term used to describe soil and rock material that has been transported through rainwash, sheetwash and downslope creep that collect on or at the base of slopes. Colluvium is typified by poorly sorted mixtures of soil and rock particles ranging in size from clay to large boulders. Talus is a gravitationally derived deposit that forms downslope of steep rock slopes, comprised of a generally loose assemblage of coarse, angular rock fragments of varied size and shape. Talus is commonly collectively referred with the term colluvium.

Colluvium is a very common deposit, encompassing upwards of 90 percent of the ground surface in mountainous areas. Colluvial deposits are typically shallow (less than about 25 to 30 feet thick), with thickness increasing towards the base of slopes. Colluvium commonly directly overlies bedrock on unglaciated slopes and intermixes with alluvial material in stream bottoms.

Subsurface investigations in colluvium using drilling equipment are often complicated by because of the heterogeneity of the deposit and possible presence of cobbles boulders. In addition, site access and safety issues also can pose problems. Test pits and trenches offer alternatives to conventional drilling that may provide better results. Subsurface investigations in talus can be especially difficult. Engineering properties of talus are extremely difficult to determine in the laboratory or in situ. A useful method for determining shear strength properties in both colluvium and talus is to analyze an existing slope failure. For talus, this may be the only way to estimate shear strength parameters. Talus deposits can be highly compressible because of the presence of large void spaces. Colluvial and talus slopes are generally marginally stable. In fact, talus slopes are usually inclined at the angle of repose of the constituent material. Cut slopes in colluvium often result in steepened slopes beyond the angle of repose, resulting in instability. Slope instability is often manifested by individual rocks dislodging from the slope face and rolling downslope. While the slope remains steeper than the angle of repose, a continuous and progressive failure will occur.

Construction in colluvium is usually difficult because of the typical heterogeneity of deposits and corresponding unfavorable characteristics such as particle size, strength variations and large void spaces. In addition, there is the possibility of long-term creep movement. Large settlements are also possible in talus. Foundations for structures in talus should extend through the deposit and bear on more competent material. Slope failures in colluvium are most often caused by infiltration of water from intense rainfall. Modifications to natural slopes in the form of cut slopes, construction of drainage ditches, and impropery channelized stormwater are ways that water can infiltrate into a colluvial soil and initiate a slope failure. Careful consideration must be given to the design of drainage facilities to prevent saturation of colluvial deposits.

5.13.5 Columbia River Sand

These sands are located in the Vancouver area, and both up and down river along the Columbia River west of the Cascades. These sands may have been deposited by backwaters from the glacial Lake Missoula catastrophic floods. The sands are poorly graded and range from loose to medium dense. The sand is susceptible to liquefaction if located below the water table. The sands do not provide a significant amount of frictional resistance for piles, and non-displacement piles may tend to run in these deposits. Based on the observed stability of slopes in this formation, soil friction angles of 28o to 32o should be expected.

5.13.6 Columbia Basin Basalts

The basalt flows that dominate the Columbia Basin were erupted into a structural and topographic low between the northern Rocky Mountains and the rising Cascade Range. During periods between the flows, erosion took place and tuffs, sandstones, and conglomerates were deposited on top of basalt flows (Thorsen, 1989). In some areas lake beds formed. The resulting drainage systems and lakes were responsible for the extensive layer of sediments between, interfingering with, and overlying the basalt flows. These interbedded sediments are generally thicker in areas peripheral to the flows, especially in and along the western margin of the basin. During the interludes between flows, deep saprolites formed on some flow surfaces. Present topographic

relief on the basin has been provided largely by a series of east-west trending anticlinal folds, by the cutting of catastrophic glacial meltwater floods, and by the Columbia River system.

The most obvious evidence of bedrock slope failures in the basin is the presence of basalt talus slopes fringing the river canyons and abandoned channels. Such talus are generally standing at near the angle of repose.

Bedrock failures are most commonly in the form of very large slumps, slump flows, and translational landslides, controlled by weak interbeds or palagonite zones between flows. Most of these are ancient failures and occur in areas of regional tilting or are associated with anticlinal ridges. The final triggering, in many cases, appears to have been oversteepening of slopes or removal of toe support.

Along I-82, SR-12, and SR-410 on the western margin of the province and in a structural basin near Pasco, layers of weak sediments interfinger with basalt flows. Some of these sediments are compact enough to be considered siltstone or sandstone and are rich in montmorillionite. Slumps and translation failures are common in some places along planes sloping as little as 8 degrees. Most landslides are associated with pre-existing failure surfaces developed by folding and or ancient landslides. In the Spokane and Grande Ronde areas thick sections of sediments make up a major part of the landslide complexes.

5.13.7 Latah Formation

Much of Eastern Washington is underlain with thick sequences of basaltic flow rock. These flows spread out over a vast area that now comprises what is commonly known as the Columbia Plateau physiographic province (see Section 5.9.6). Consisting of extrusive volcanic rocks, they make up the Columbia River Basalt Group (Griggs, 1959). This geologic unit includes numerous basalt formations, each of which includes several individual flows that are commonly separated from one another by sedimentary lacustrine deposits (Smith et al., 1989). In the Spokane area, these sedimentary rock units are called the Latah Formation.

Most of the sedimentary layers between the basalt flows range from claystone to fine-grained sandstone in which very finely laminated siltstone is predominant. The fresh rock ranges in color from various shades of gray to almost white, tan and rust. Because of its generally poorly indurated state, the Latah rarely outcrops. It erodes rapidly and therefore is usually covered with colluvium or in steeper terrain, it is hidden under the rubble of overlying basaltic rocks.

The main engineering concern for the Latah Formation is its potential for rapid deterioration by softening and eroding when exposed to water and cyclic wetting and drying (Hosterman, 1969). The landslide potential of this geologic unit is also of great engineering concern. While its undisturbed state can often justify relatively high bearing resistance, foundation bearing surfaces need to be protected from precipitation and groundwater. Construction drainage is important and should be planned in advance of excavating. Bearing surface protection measures often include mud slabs or gravel blankets.

In the Spokane area, landslide deposits fringe many of the buttes (Thorsen, 1989). Disoriented blocks of basalt lie in a matrix of disturbed silts. The Latah Formation typically has low permeability. The basalt above it is often highly fractured, and joints commonly fill with water. Although this source of groundwater may be limited, when it is present, and the excavation extends through the Latah-basalt contact, the Latah will often erode (pipe) back under the basalt causing potential instability. The Latah is also susceptible to surface erosion if left exposed in steep cuts. Shotcrete is often used to provide a protective coating for excavation surfaces. Fiber-reinforced shotcrete and soil nailing are frequently used for temporary excavation shoring.

The Latah Formation has been the cause of a number of landslides in northeast Washington and in Idaho. Measured long-term shear strengths have been observed to be in the range of 14 to 17 degrees. It is especially critical to consider the long-term strength of this formation when cutting into this formation or adding load on this formation.

5.13.8 Coastal Range Siltstone/Claystone

The Coast Range, or Willapa Hills, are situated between the Olympic Mountains to the north and the Columbia River to the south. Thick sequences of Tertiary sedimentary and volcanic rocks are present. The rocks are not intensely deformed but have been subjected to compressional tectonism and have been somewhat folded and faulted (Lasmanis, 1991). The Willapa Hills have rounded topography, deep weathering profiles, and typically thick residual soil development. The interbedded sandstone and fine-grained sedimentary formations are encountered in highway cuts. The material from these cuts has been used in embankments. Some of the rock excavated from these cuts will slake when exposed to air and water and cause settlement of the embankment, instability and pavement distortion.

Locally thick clayey residual soils are present and extensive areas are underlain by sedimentary and volcanic rocks that are inherently weak. Tuffaceous siltstone and tilted sedimentary rocks with weak interbeds are common. The volcanic units are generally altered and or mechanically weak as a result of brecciation. Large and small-scale deep-seated and shallow landsliding are widespread geomorphic processes in this province. The dominant forms of landsliding are translational landslides, earthflows or slump-earthflows, and debris flows (Thorsen, 1989). Many of these are made up of both soil and bedrock. Reactivation of landslide in some areas can be traced to stream cutting along the toe of a slide.

5.13.9 Troutdale Formation

The Troutdale Formation consists of poorly to moderately consolidated and weakly lithified silt, sand and gravel deposited by the ancestral Columbia River. These deposits can be divided into two general parts; a lower gravel section containing cobbles, and upper section that contains volcanic glass sands. The formation is typically a terrestrial deposit found in and proximal to the present-day flood plain of the Columbia River and the Portland Basin. The granular components of the formation are typically well-rounded as a result of the depositional environment and are occasionally weakly cemented. Occasional boulders have been found in this formation. Excavation for drilled shafts and soldier piles in these soils can be very difficult because of the boulders and cemented sands.

Slope stability issues have been observed in the Troutdale Formation. Significant landslides have occurred in this unit in the Kelso area. Wet weather construction can be difficult if the soils have significant fines content. As described above, when the moisture content of soil with relatively high fines content rises a few percent above optimum, the soils become muddy and unstable. Permeability in this geologic unit varies based on the fines content or presence of lenses or layers of cemented and/or fine-grained material.

5.13.10 Marine Basalts - Crescent Formation

The Crescent Formation basalts were erupted close to the North American shoreline in a marine setting during Eocene time (Lasmanis, 1991). The formation consists mostly of thick submarine basalt flows, which commonly formed as pillow lavas. The Crescent Formation was deposited upon continentally derived marine sediments and is locally interbedded with sedimentary rocks. The Crescent Formation extends from the Willapa Hills area to the Olympic Peninsula. During the middle Eocene, the Crescent Formation was deformed during accretion to North America. The pillow basalts have extensive zones of palagonite and interstitial clay. Along the Olympic Peninsula the basalts are generally highly fractured and are often moderately weathered to decomposed.

The properties of the marine basalts are variable and depend on the amount of fracturing, mineralogy, alteration and weathering. Borrow from cut sections is generally suitable for use in embankments; however, it may not be suitable for use as riprap or quarry spalls because of degradation and slaking characteristics. All marine basalts should be tested for degradation before use as riprap or quarry spalls in permanent applications.

5.13.11 Mélange Rocks on Olympic Peninsula

During the middle Miocene, convergence of the Juan de Fuca plate with the North American plate accelerated to the point that sedimentary, volcanic, and metamorphic rocks along the west flank of the Olympics were broken, jumbled, and chaotically mixed to form a mélange (Thorsen, 1989). This formation is known as the Hoh rock assemblage. Hoh mélange rocks are exposed along 45 miles of the western coast. Successive accretionary packages of sediments within the core of the mountains are composed of folded and faulted Hoh and Ozette mélange rock. Typical of mélange mixtures, which have been broken, sheared and jumbled together by tectonic collision, the Hoh includes a wide range of rock types. Resistant sandstone and conglomerated sequences are extensively exposed in headlands and terraces along the Olympic coast. The mélange rocks may include pillow basalt, deep ocean clay and submarine fan deposits. Slopes in tilted sedimentary rocks that have been extensively altered and/or contain weak interbeds have been undercut by wave action in places along the Strait of Juan de Fuca. Slump flows or bedding plane block glides form along the interbeds.

Because of the variability of the mélange rocks and the potential for failure planes, caution should be used when designing cuts. A robust field exploration program is essential to determine the geometry and properties of the soil and rock layers.

5.14 Application of the Observational Method to Adjust Design Properties

The observational method as described by Peck (1969) and Wu (2008) may be used to adjust design parameters based on measured performance during construction. This approach may be used in the following ways:

- Planning during design that measurements will be taken and observations will be made during construction to verify the design assumptions used, or
- To address unexpected performance during construction.

The application of the observational method includes the following elements (Peck, 1969):

1. "Exploration sufficient to establish at least the general nature, pattern and properties of the deposits, but not necessarily in detail.
2. Assessment of the most probable conditions and the most unfavorable conceivable deviations from these conditions. In this assessment geology often plays a major role.
3. Establishment of the design based on a working hypothesis of behavior anticipated under the most probable conditions.
4. Selection of quantities to be observed as construction proceeds and calculation of their anticipated values on the basis of the working hypothesis.
5. Calculation of values of the same quantities under the most unfavorable conditions compatible with the available data concerning the subsurface conditions.
6. Selection in advance of a course of action or modification of design for every foreseeable significant deviation of the observational findings from those predicted on the basis of the working hypothesis.
7. Measurement of quantities to be observed and evaluation of actual conditions.
8. Modification of design to suit actual conditions."

If the observational method is to be used as part of the design process, the design shall meet the requirements of this manual, adjusting the design as needed during construction to be consistent with the performance observed.

5.15 References

AASHTO, 2012, LRFD Bridge Design Specifications, American Association of State Highway and Transportation Officials, Sixth Edition, Washington, D.C., USA. (Note: Most current edition shall be used)

ASTM, 2010, Standard D1621, Standard Test Method for Compressive Properties of Rigid Cellular Plastics.l

ASTM, 2010, Standard D4043, Selection of Aquifer Test Method in Determining Hydraulic Properties by Well Techniques.

ASTM, 2010, Standard D4044, Standard Test Method for Field Procedure for Instantaneous Change in Head (Slug) Tests for Determining Hydraulic Properties of Aquifers.

ASTM, 2008, Standard D4050, Standard Test Method for (Field Procedure) for Withdrawal and Injection Well Tests for Determining Hydraulic Properties of Aquifer Systems.

ASTM, 2003, Standard D5333, Standard Test Method for Measurement of Collapse Potential of Soils.

ASTM, 2010, Standard D4633, Standard Test Method for Energy Measurement for Dynamic Penetrometers.

Allen, T. M., Kilian, A. P., 1993, "Use of Wood Fiber and Geotextile Reinforcement to Build Embankment Across Soft Ground," Transportation Research Board Record 1422.

Bowles, J. E., 1979, Physical and Geotechnical Properties of Soils, McGraw-Hill, Inc.

Duncan, J. M., and Stark, T. D., 1992, "Soil Strengths from Back Analysis of Slope Failures," *Stability and Performance of Slopes and Embankments-II Proceedings*, Berkeley, CA, pp. 890-904.

Dunn, I. S., Anderson, L. R., Kiefer, F. W., 1980, Fundamentals of Geotechnical Analysis, John Wiley & Sons, Inc.

Griggs, A.B., 1976, U.S. Geological Service Bulletin 1413, "The Columbia River Basalt Group in the Spokane Quadrangle, Washington, Idaho, and Montana".

Higgins, J. D., Fragazy, R. J., Martin, T. L., 1987, *Engineering Design in Loess Soils of Southeastern Washington*, WA-RD 145.1.

Higgins, J. D., Fragazy, R. J.,1988, *Design Guide for Cut Slopes in Loess of Southeastern Washington*, WA-RD 145.2.

Hoek, E., and Brown, E.T. 1988. "The Hoek-Brown Failure Criterion – a 1988 Update." *Proceedings, 15th Canadian Rock Mechanics Symposium*, Toronto, Canada.

Hoek, E., Carranza-Torres, C., and Corkum, B., 2002, "Hoek-Brown Criterion – 2002 Edition," Proceedings NARMS-TAC Conference, Toronto, 2002, 1, pp. 267-273.

Holtz, R. D. & Kovacs, W. D., 1981, An Introduction to Geotechnical Engineering, Prentice-Hall, Inc.

Hosterman, John W., 1969, U.S. Geological Survey Bulletin 1270, "Clay Deposits of Spokane Co. WA".

Hussain, M., Start, T. D., and Akhtar, K., 2010, "Back-Analysis Procedure for Landslides," Proceedings of the International Conference on Geotechnical Engineering, Lahore, Pakistan, Pakistan Geotechnical Engineering Society, pp. 159-166.

International Society of Rock Mechanics (ISRM), 1978, Suggested methods for the quantitative description of discontinuities in rock masses, International Journal of Rock Mechanics and Mining Sciences, pp. 319-368.

Joseph, N. L., 1990, Geologic Map of the Spokane 1:100,000 Quadrangle, Washington – Idaho, Washington Division of Geology and Earth Resources, Open File Report 90-17.

Kilian, A. P., Ferry, C. D., 1993, Long Term Performance of Wood Fiber Fills, Transportation Research Board Record 1422.

Lasmanis, R., 1991, The Geology of Washington: Rocks and Minerals, v. 66, No. 4.

Lunne, et al., 1997, Cone Penetration Testing in Geotechnical Practice, E & FN Spon, London.

Mayne, P. W., Christopher, B.R., and DeJong, J., 2002, *Subsurface Investigations – Geotechnical Site Characterization,* Publication No. FHWA NHI-01-031, National Highway Institute, Federal Highway Administration, Washington, DC, 300 pp.

Mesri, G., and Shahien, M. 2003, "Residual Shear Strength Mobilized in First Time Slope Failures," *ASCE Journal of Geotechnical and Geoenvironmental Engineering*, Vol. 129, No. 1, pp. 12-31.

Meyerhoff, G. G., Journal of Soil Mechanics and Foundation Division, American Society of Civil Engineers, January, 1956.

NAVFAC, 1971, *Design Manual: Soil Mechanics, Foundations, and Earth Structures*, DM-7.

Peck, R. B., 1969, "Ninth Rankine Lecture: Advantages and Limitations of the Observational Method in Applied Soil Mechanics,"*Geotechnique*, No. 19, Vol. 2, pp. 171-187.

Peck, R. B., Hanson, W. E. and Thornburn, T. H., 1974, Foundation Engineering, 2nd Edition, John Wiley & Sons, New York.

Phoon, K.-K., Kulhawy, F. H., Grigoriu, M. D., 1995, "Reliability-Based Design of Foundations for Transmission Line Structures," Report TR-105000, Electric Power Research Institute, Palo Alto, CA.

Sabatini, P. J., Bachus, R. C., Mayne, P. W., Schneider, T. E., Zettler, T. E., FHWA-IF-02-034, 2002, Evaluation of soil and rock properties, Geotechnical Engineering Circular No. 5.

Schmertmann, J. H., 1967, Research Bulletin No. 121A, Florida Department of Transportation; University of Florida.

Smith, G. A., Bjornstad, B.N., Fecht, K.R., 1989, Geologic Society of America Special Paper 239, "Neogene Terrestrial Sedimentation On and Adjacent to the Columbia Plateau, WA, OR, and ID".

Stark, T. D.; Choi, Hangeok; and McCone, Sean, 2005, "Drained shear strength parameters for analysis of landslides," ASCE *Journal of Geotechnical and Geoenvironmental Engineering*, Vol. 131, No. 5, pp. 575-588.

Stark, T.D. and Hussain, M., 2013. "Drained Shear Strength Correlations for Slope Stability Analyses," *ASCE Journal of Geotechnical and Geoenvironmental Engineering*, Vol. 139, No. 6, pp. 853-862.

Stark, T.D., Newman, E. J., de la Pena, G., and Hillebrandt, D., 2011. "Fill Placement on Slopes Underlain by Franciscan Mélange," *Journal of Geotechnical and Geoenvironmental Engineering*, ASCE, Vol. 137, No. 3, pp. 263-272.

Thorsen, G. W., 1989, Landslide Provinces in Washington, Engineering Geology in Washington, Washington Division of Geology and Earth Resources, Bulletin 78

Troost, K.G. and Booth D.B. (2003), Quaternary and Engineering Geology of the Central and Southern Puget Sound Lowland. Professional Engineering Practices Liasion Program, University of Washington, May 1-3, 2003.

Turner, A. K., and Schuster, R. L., editors, 1996, Landslides Investigation and Mitigation, Transportation Research Board, TRB Special Report 247, National Academy Press, Washington, DC, 673 pp.

WSDOT *Highway Runoff Manual* M 31-16, March 2004.

WSDOT *Standard Specifications for Road, Bridge, and Municipal Construction* M 41-10, 2004.

Wu, T.H., 2008, "2008 Peck Lecture: The Observational Method: Case History and Models," *ASCE Journal of Geotechnical and Geoenvironmental Engineering*, Vol. 137, No. 10, pp. 862-873.

Youd, T.L. and I.M. Idriss. 1997. *Proceedings of the NCEER Workshop on Evaluation of Liquefaction Resistance of Soils*; Publication No. MCEER-97-0022.

Chapter 6 Seismic Design

6-1 Seismic Design Responsibility and Policy

6-1.1 Responsibility of the Geotechnical Designer

The geotechnical designer is responsible for providing geotechnical/seismic input parameters to the structural engineers for their use in structural design of the transportation infrastructure (e.g., bridges, retaining walls, ferry terminals, etc.). Specific elements to be addressed by the geotechnical designer include the design ground motion parameters, site response, geotechnical design parameters, and geologic hazards. The geotechnical designer is also responsible for providing input for evaluation of soil-structure interaction (foundation response to seismic loading), earthquake-induced earth pressures on retaining walls, and an assessment of the impacts of geologic hazards on the structures.

6-1.2 Geotechnical Seismic Design Policies

6-1.2.1 *Seismic Performance Objectives*

In general, the AASHTO Load and Resistance Factor Design (LRFD) Bridge Design Specifications is followed for structure classification of bridges, except that the designation "other" is replaced with "normal" in the WSDOT *Bridge Design Manual LRFD* (BDM) M 23-50.

In keeping with the current seismic design approaches employed both nationally and internationally, geotechnical seismic design shall be consistent with the philosophy identified in the WSDOT BDM for structure seismic design which defines the structure performance objectives for the Safety Evaluation Earthquake (SEE) and the Functional Evaluation Earthquake (FEE). For the SEE, the performance objective requires that the structure be designed for non-collapse due to earthquake shaking and geologic hazards associated with a design seismic event so that loss of life and serious injury due to structure collapse are minimized. This is the primary performance objective for bridges classified as "normal". This performance objective shall be achieved at a seismic hazard level that is consistent with the seismic hazard level required in the AASHTO specifications (e.g., 7 percent probability of exceedance in 75 years for other structures, which is an approximate return period of 1,000 years). Geotechnical design associated with structures shall be consistent with this performance objective and design hazard level.

For the FEE, the performance objective requires minimal to no earthquake damage and that the structure remain in full service after the earthquake. For bridges classified as "essential" or "critical", a two level seismic design is required: the SEE as defined above, except that the damage due to the earthquake is limited to minimal to moderate and limited service for the structure is expected after the earthquake, and the Functional Evaluation Earthquake (FEE). This FEE performance objective shall be achieved at a hazard level of 30 percent probability of exceedance in 75 years (or 210-year return period). Geotechnical design associated with structures shall also be consistent with this performance objective and design hazard level for essential and critical bridges. See the BDM Chapter 4, for additional details regarding the performance objectives and

associated design requirements. See GDM Section 6-3.1 for requirements to assess the hazard level.

Bridge approach embankments and fills through which cut-and-cover tunnels are constructed should be designed to remain stable during the design seismic event because of the potential to contribute to collapse or inadequate performance of the structure should they fail or deform excessively. The aerial extent of approach embankment (and embankment surrounding cut-and-cover tunnels) seismic design and mitigation (if necessary) should be such that the structure is protected against instability or loading conditions that could result in collapse or inadequate performance. The typical distance of evaluation and mitigation is within 100 feet of the abutment or tunnel wall, but the actual distance should be evaluated on a case-by-case basis. Instability or other seismic hazards such as liquefaction, lateral spread, downdrag, and settlement may require mitigation near the abutment or tunnel wall to ensure that the structure is not compromised during a design seismic event. The geotechnical designer should evaluate the potential for differential settlement between mitigated and non mitigated soils. Additional measures may be required to limit differential settlements to tolerable levels both for static and seismic conditions. For “normal” bridges, the seismic stability of the bridge approach embankment in the lateral direction may not be required if instability in the lateral direction will not significantly damage the bridge and will not cause a life safety issue. The bridge interior pier foundations should also be designed to be adequately stable with regard to liquefaction, lateral spreading, flow failure, and other seismic effects to prevent bridge collapse for “normal” bridges when considering the FEE and which otherwise could compromise the functioning of essential and critical bridges for both the SEE and FEE hazard levels.

All retaining walls and abutment walls, including reinforced slopes steeper than 0.5H:1V, which shall be considered to be a wall (see Section 15-5.6), shall be evaluated and designed for seismic stability internally and externally (i.e. sliding, eccentricity, and bearing capacity), with the exception of walls that meet the AASHTO *LRFD Bridge Design Manual* “No Seismic Analysis” provisions in AASHTO Article 11.5.4.2. Noise walls, as well as reinforced slopes steeper than 1.2H:1V, shall also be evaluated for seismic stability.

With regard to seismic overall slope stability (often referred to as global stability) involving a retaining wall/reinforced slope as defined above, or noise wall, the geotechnical designer shall evaluate the impacts of failure due to seismic loading, as well as for liquefied conditions after shaking. If the wall seismic global stability does not meet the requirements in Sections 6-4.2 and 6-4.3, collapse of the wall/reinforced slope or noise wall *shall* be considered likely and assumed to cause loss of life or severe injury to the public if the following are true:

- The maximum wall/reinforced slope height is greater than 10 feet in height and
- The wall/reinforced slope is close enough to the traveled way such that collapse of the wall/reinforced slope or the slope that it supports will cause an abrupt elevation change within part or all of the traveled way, or will result in debris from the collapsed wall and the material that it supports being deposited on part or all of the traveled way, or other adjacent facility/structure.

If the above two bullets are true, the stability of the wall/reinforced slope or noise wall shall be improved such that the life safety of the public is preserved. If the maximum wall/reinforced slope or noise wall or noise wall height is less than 10 ft, but the second bullet

is still true, the potential for wall/reinforced slope collapse shall be evaluated to assess the severity of the impact to the traveled way and to the potential for life safety issues to occur. Similarly, if the wall height is greater than 10 ft, but it is not near the traveled way as defined above, the potential for wall/reinforced slope or noise wall collapse shall be evaluated to assess the severity of the impact to the public and the potential for life safety issues to occur. In either of these cases, if it is determined that failure of the wall will compromise the life safety of the public, the stability of the wall/reinforced slope or noise wall shall be improved such that the life safety of the public is preserved.

Note that the policy to stabilize retaining walls/reinforced slopes and noise walls for overall stability due to design seismic events may not be practical for walls/reinforced slopes or noise walls placed on marginally stable landslide areas or otherwise marginally stable slopes. In general, if the placement of a wall/reinforced slope within a marginally stable slope (i.e., marginally stable for static conditions) has only a minor effect on the seismic stability of the landslide or slope, or if the wall/reinforced slope has a relatively low risk of causing loss of life or severe injury to the traveling public if collapse occurs, the requirement of the wall/reinforced slope and slope above and/or below the structure to meet minimum seismic overall stability requirements may be waived, subject to the approval of the State Geotechnical Engineer. The State Geotechnical Engineer will assess the impact and potential risks caused by wall and slope seismic instability or poor performance, and the magnitude of the effect the presence of the wall/reinforced slope could have on the stability of the overall slope during the design seismic event. The effect on the corridor in addition to the portion of the corridor being addressed by the project will be considered. In general, if the presence of the wall/reinforced slope could decrease the overall slope stability factor of safety by more than 0.05, the requirement to meet minimum seismic overall slope stability requirements will not be waived. However, this requirement may be waived by the State Geotechnical Engineer if the seismic slope stability safety factor for the existing slope (for the design earthquake ground motion) is significantly less than 0.9, subject to the evaluation of the impacts described above.

Cut slopes in soil and rock, fill slopes, and embankments should be evaluated for instability due to design seismic events and associated geologic hazards. Instability associated with cuts and fills is usually not mitigated due to the high cost of applying such a design policy uniformly to all slopes statewide. However, slopes that could cause collapse of an adjacent structure (e.g., a bridge, building, or pipeline) if failure due to seismic loading occurs, shall be stabilized.

6-1.2.2 *Liquefaction Mitigation for Bridge Widenings*

Bridge widenings require special considerations, as the existing bridge to be widened may not be adequately stabilized to resist the forces imparted to the bridge due to liquefaction effects such as downdrag and lateral spreading loads/deformations. See BDM Section 4.3 for bridge widening seismic design and existing bridge seismic retrofit policies.

To assess the effect of liquefaction induced foundation loading and deformation on the existing and widened bridge stability, the geotechnical engineer provides the structural engineer with the following:

- depth and extent of soil that is likely to liquefy for the applicable hazard level (i.e., for the SEE for normal bridges, and the SEE and FEE hazard levels for essential and critical bridges,

- liquefaction induced downdrag loads and settlement,
- p-y curve parameters for the soil in both a liquefied and not liquefied state,
- the lateral spreading soil deformation profile (i.e., free field displacements), and
- the lateral loads acting on the foundation elements if flow failure is likely.

With this information, the structural designer can then determine the seismic stability of the existing bridge and bridge widening, and the need for structural strengthening of the existing bridge. If that is not feasible, the geotechnical engineer assesses the need for ground improvement to prevent the liquefaction from occurring. If ground improvement is needed, the geotechnical engineer also provides a ground improvement design.

Note that the foundation loads caused by flow failure are affected by the foundation details and therefore may require some design iteration between the geotechnical and structural designer.

Details on the liquefaction analysis, mitigation needed if the bridge cannot be designed to resist the forces and soil deformation anticipated, and the input the geotechnical designer provides to the structural designer regarding liquefaction and its effect, are provided in Sections 6-4.2 and 6-5 of this GDM.

6-1.2.3 *Maximum Considered Depth for Liquefaction*

When evaluating liquefaction potential and its impacts to transportation facilities, the maximum considered liquefaction depth below the natural ground surface shall be limited to 80 feet. However, for sites that contain exceptionally loose soils that are apparently highly susceptible to liquefaction to greater depths, effective stress analysis techniques may be used to evaluate the potential for deeper liquefaction and the potential impacts of that liquefaction. The reasons for this depth limitation are as follows:

Limits of Simplified Procedures – The simplified procedures most commonly used to assess liquefaction potential are based on historical databases of liquefied sites with shallow liquefaction (i.e., in general, less than 50 feet). Thus, these empirical methodologies have not been calibrated to evaluate deep liquefaction. In addition, the simplified equation used to estimate the earthquake induced cyclic shear stress ratio (CSR) is based on a stress reduction coefficient, r_d, which is highly variable at depth. For example, at shallow depth (15 feet), r_d ranges from about 0.94 to 0.98. As depth increases, r_d becomes more variable ranging, for example, from 0.40 to 0.80 at a depth of 65 feet. The uncertainty regarding the coefficient r_d and lack of verification of the simplified procedures used to predict liquefaction at depth, as well as some of the simplifying assumptions and empiricism within the simplified method with regard to the calculation of liquefaction resistance (i.e., the cyclic resistance ratio CRR), limit the depth at which these simplified procedures should be used. Therefore, simplified empirical methods to predict liquefaction at depths greater than 50 to 60 feet should be based on a site response analysis to obtain an appropriate, site-specific stress reduction profile, provided that sufficient subsurface data are available and that variability in the input ground motions is considered.

Lack of Verification and Complexity of More Rigorous Approaches – Several non-linear, effective stress analysis programs have been developed by researchers and can be used to estimate liquefaction potential at depth. However, there has been little field verification of the ability of these programs to predict liquefaction at depth because there are few well documented sites with deep liquefaction. Key is the ability of these approaches to predict pore pressure increase and redistribution in liquefiable soils during and after ground shaking. Calibration of such pore pressure models has so far been limited to comparison to laboratory performance data test results and centrifuge modeling. Furthermore, these more rigorous methods require considerable experience to obtain and apply the input data required, and to confidently interpret the results. Hence, use of such methods requires independent peer review (see Section 6-3 regarding peer review requirements) by expert(s) in the use of such methods for liquefaction analysis.

Decreasing Impact with Depth – Observation and analysis of damage in past earthquakes suggests that the damaging effects of liquefaction generally decrease as the depth of a liquefiable layer increases. This reduction in damage is largely attributed to decreased levels of relative displacement and the need for potential failure surfaces to extend down to the liquefying layer. For example, the effect of a 10 feet thick soil layer liquefying between depths of 80 and 90 feet will generally be much less severe than the effect of a layer between the depths of 10 and 20 feet. Note that these impacts are focused on the most damaging effects of liquefaction, such as lateral deformation and instability. Deeper liquefaction can, however, increase the magnitude and impact of vertical movement (settlement) and loading (downdrag) on foundations.

Difficulties Mitigating for Deep Liquefaction – The geotechnical engineering profession has limited experience with mitigation of liquefaction hazards at large depths, and virtually no field case histories on which to reliably verify the effectiveness of mitigation techniques for very deep liquefaction mitigation. In practicality, the costs to reliably mitigate liquefaction by either ground improvement or designing the structure to tolerate the impacts of very deep liquefaction are excessive and not cost effective for most structures.

6-1.3 Governing Design Specifications and Additional Resources

The specifications applicable to seismic design of a given project depend upon the type of facility.

For transportation facilities the following manuals, listed in hierarchical order, shall be the primary source of geotechnical seismic design policy for WSDOT:

1. This *Geotechnical Design Manual* (GDM)
2. AASHTO *Guide Specifications for LRFD Seismic Bridge Design*
3. AASHTO *LRFD Bridge Design Specifications*

If a publication date is shown, that version shall be used to supplement the geotechnical design policies provided in this WSDOT GDM. If no date is shown, the most current version, including interim publications of the referenced manuals, as of the WSDOT GDM publication date shall be used. This is not a comprehensive list; other publications are referenced in this WSDOT GDM and shall be used where so directed herein.

Until the AASHTO Guide Specifications for *LRFD Bridge Seismic Design* are fully adopted in the AASHTO *LRFD Bridge Design Specifications*, the seismic design provisions in the Guide Specifications regarding foundation design, liquefaction assessment, earthquake hazard assessment, and ground response analysis shall be considered to supersede the parallel seismic provisions in the AASHTO *LRFD Bridge Design Specifications*.

With regard to seismic hazard levels, the AASHTO *Guide Specifications for LRFD Seismic Bridge Design* and the AASHTO *LRFD Bridge Design Specifications* are based on the 2002 USGS website hazard model at a return period of 975 years (i.e., a probability of exceedance of approximately 7 percent in 75 years). The GDM and BDM seismic design requirements have been updated to use the 2014 USGS website hazard model at a probability of exceedance of 7 percent in 75 years and shall be considered to supersede the AASHTO specifications. Note that the USGS website refers to this hazard level as 5% in 50 years.

For seismic design of new buildings and non-roadway infrastructure, the International Building Code (IBC) (International Code Council), most current version should be used.

FHWA geotechnical design manuals, or other nationally recognized design manuals, are considered secondary relative to this WSDOT GDM and the AASHTO manuals (and for buildings, the IBC) listed above regarding WSDOT geotechnical seismic design policy, and may be used to supplement the WSDOT GDM, WSDOT BDM, and AASHTO design specifications.

A brief description of these additional references is as follows:

FHWA Geotechnical Engineering Circular No. 3 (Kavazanjian, et al., 2011) – This FHWA document provides design guidance for geotechnical earthquake engineering for highways. Specifically, this document provides guidance on earthquake fundamentals, seismic hazard analysis, ground motion characterization, site characterization, seismic site response analysis, seismic slope stability, liquefaction, and seismic design of foundations and retaining walls. The document also includes design examples for typical geotechnical earthquake engineering analyses.

FHWA *LRFD Seismic Analysis and Design of Bridges Reference Manual* (Marsh et al., 2014) – This manual adapts and updates FHWA Geotechnical Engineering Circular No. 3 to be applicable to LRFD for Bridges and their foundations. This manual includes both geotechnical and structural design.

***Geotechnical Earthquake Engineering* Textbook** – The textbook titled *Geotechnical Earthquake Engineering* (Kramer, 1996) provides a wealth of information to geotechnical engineers for seismic design. The textbook includes a comprehensive summary of seismic hazards, seismology and earthquakes, strong ground motion, seismic hazard analysis, wave propagation, dynamic soil properties, ground response analysis, design ground motions, liquefaction, seismic slope stability, seismic design of retaining walls, and ground improvement.

In addition, the following website may be accessed to obtain detailed ground motion data that will be needed for design:

United States Geological Survey (USGS) Website – The USGS National Hazard Mapping Project website https://earthquake.usgs.gov/hazards/hazmaps is a valuable source for information regarding the mapping seismic hazard in the United States, and specifically on the details of the hazard model underlying the 2014 mapping. The website also includes a Unified Hazard Tool which allows the user to extract hazard curves and deaggregations for various return periods of interest for the 2008 and 2014 seismic hazard maps. This tool can be found at the following address: https://earthquake.usgs.gov/hazards/interactive

The results of the hazards analysis using the 2002 USGS website hazard model at a probability of exceedance of 5 percent in 50 years are the same as those from the AASHTO hazard analysis maps. However, the USGS has updated their hazards maps, and the new 2014 hazard maps and deaggregation data shall be used for seismic design (see USGS website for update and figures later in this GDM chapter).

Geotechnical seismic design is a rapidly developing sub-discipline within the broader context of the geotechnical engineering discipline, and new resources such as technical journal articles, as well as academic and government agency research reports, are becoming available to the geotechnical engineer. It is important when using these other resources, as well as those noted above, that a review be performed to confirm that the guidance represents the current state of knowledge and that the methods have received adequate independent review. Where new methods not given in the AASHTO Specifications or herein (i.e., Chapter 6) are proposed in the subject literature, use of the new method(s) shall be approved by the State Geotechnical Engineer for use in the project under consideration.

6-2 Geotechnical Seismic Design Considerations

6-2.1 Overview

The geotechnical designer has four broad options available for seismic design. They are:

- Use specification/code based hazard (Section 6-3.1) with specification/code based ground motion response (Section 6-3.2.1), also referred to as the General Procedure
- Use specification/code based hazard (Section 6-3.1) with site specific ground motion response (Section 6-3.2.2 and Appendix 6-A)
- Use site specific hazard (Section 6-3.1 and Appendix 6-A) with specification/code based ground motion response (Section 6-3.2.1)
- Use site specific hazard (Section 6-3.1 and Appendix 6-A) with site specific ground motion response (Section 6-3.2.2 and Appendix 6-A)

Geotechnical parameters required for seismic design depend upon the type and importance of the structure, the geologic conditions at the site, and the type of analysis to be completed. For most structures, specification based design criteria appropriate for the site's soil conditions may be all that is required. Unusual, critical, or essential structures may require more detailed structural analysis, requiring additional geotechnical parameters. Finally, site conditions may require detailed geotechnical evaluation to quantify geologic hazards.

6-2.2 Site Characterization and Development of Seismic Design Parameters

As with any geotechnical investigation, the goal is to characterize the site soil conditions and determine how those conditions will affect the structures or features constructed when seismic events occur. In order to make this assessment, the geotechnical designer should review and discuss the project with the structural engineer, as seismic design is a cooperative effort between the geotechnical and structural engineering disciplines. The geotechnical designer should do the following as a minimum:

- Identify, in coordination with the structural designer, structural characteristics (e.g., fundamental frequency/period), anticipated method(s) of structural analysis, performance criteria (e.g., collapse prevention, allowable horizontal displacements, limiting settlements, target load and resistance factors, components requiring seismic design, etc.) and design hazard levels (e.g., 7 percent PE in 75 years or 30 percent in 75 years).
- Identify, in coordination with the structural engineer, what type of ground motion parameters are required for design (e.g., response spectra or time histories), and their point of application (e.g., mudline, bottom of pile cap, or depth of pile fixity).
- Identify, in coordination with the structural engineer, how foundation stiffness will be modeled and provide appropriate soil stiffness properties or soil/ foundation springs.
- Identify potential geologic hazards, areas of concern (e.g. soft soils), and potential variability of local geology.
- Identify potential for large scale site effects (e.g., basin, topographic, and near fault effects).
- Identify, in coordination with the structural designer, the method by which risk-compatible ground motion parameters will be established (specification/code, deterministic, probabilistic, or a hybrid).
- Identify engineering analyses to be performed (e.g. site specific seismic response analysis, liquefaction susceptibility, lateral spreading/slope stability assessments).
- Identify engineering properties required for these analyses.
- Determine methods to obtain parameters and assess the validity of such methods for the material type.
- Determine the number of tests/samples needed and appropriate locations to obtain them.

It is assumed that the basic geotechnical investigations required for nonseismic (gravity load) design have been or will be conducted as described in Chapters 2, 5 and the individual project element chapters (e.g., Chapter 8 for foundations, Chapter 15 for retaining walls, etc.). Typically, the subsurface data required for seismic design is obtained concurrently with the data required for design of the project (i.e., additional exploration for seismic design over and above what is required for nonseismic foundation design is typically not necessary). However, the exploration program may need to be adjusted to obtain the necessary parameters for seismic design. For instance, a seismic cone might be used in conjunction with a CPT if shear wave velocity data is required. Likewise, if liquefaction potential is a significant issue, mud rotary drilling with SPT sampling should be used. In this case, preference shall be given to drill rigs furnished with automatic SPT hammers that have been recently (i.e., within the past 6 months) calibrated for hammer energy. Hollow-stem auger drilling and non-standard samplers (e.g., down-the-hole or

wire-line hammers) shall not be used to collect data used in liquefaction analysis and mitigation design, other than to obtain samples for gradation.

The goal of the site characterization for seismic design is to develop the subsurface profile and soil property information needed for seismic analyses. Soil parameters generally required for seismic design include:

- Dynamic shear modulus at small strains or shear wave velocity;
- Shear modulus and material damping characteristics as a function of shear strain;
- Cyclic and post-cyclic shear strength parameters (peak and residual);
- Consolidation parameters such as the Compression Index or Percent Volumetric Strain resulting from pore pressure dissipation after cyclic loading, and
- Liquefaction resistance parameters.

Table 6-1 provides a summary of site characterization needs and testing considerations for geotechnical/seismic design.

Chapter 5 covers the requirements for using the results from the field investigation, the field testing, and the laboratory testing program separately or in combination to establish properties for static design. Many of these requirements are also applicable for seismic design.

For routine designs, in-situ field measurements or laboratory testing for parameters such as the dynamic shear modulus at small strains, shear modulus and damping ratio characteristics versus shear strain, and residual shear strength are generally not obtained. Instead, correlations based on index properties may be used in lieu of in-situ or laboratory measurements for routine design to estimate these values. However, if a site specific ground motion response analysis is conducted, field measurements of the shear wave velocity V_s should be obtained.

Table 6-1 Summary of Site Characterization Needs and Testing Considerations for Seismic Design (Adapted From Sabatini, et al., 2002)

Geotechnical Issues	Engineering Evaluations	Required Information for Analyses	Field Testing	Laboratory Testing
Site Response	• source characterization and ground motion attenuation • site response spectra • time history	• subsurface profile (soil, groundwater, depth to rock) • shear wave velocity • shear modulus for low strains • relationship of shear modulus with increasing shear strain, OCR, and PI • equivalent viscous damping ratio with increasing shear strain, OCR, and PI • Poisson's ratio • unit weight • relative density • seismicity (design earthquakes - source, distance, magnitude, recurrence)	• SPT • CPT • seismic cone • geophysical testing (shear wave velocity) • piezometer	• Atterberg limits • grain size distribution • specific gravity • moisture content • unit weight • resonant column • cyclic direct simple shear test • torsional simple shear test • cyclic triaxial tests
Geologic Hazards Evaluation (e.g., liquefaction, lateral spreading, slope stability, faulting)	• liquefaction susceptibility • liquefaction triggering • liquefaction induced settlement • settlement of dry sands • lateral spreading and flow failure • slope stability and deformations	• subsurface profile (soil, groundwater, rock) • shear strength (peak and residual) • unit weights • grain size distribution • plasticity characteristics • relative density • penetration resistance • shear wave velocity • seismicity (PGA, design earthquakes, deaggregation data, ground motion time histories) • site topography	• SPT • CPT • seismic cone • Becker penetration test • vane shear test • piezometers • geophysical testing (shear wave velocity)	• grain size distribution • Atterberg Limits • specific gravity • organic content • moisture content • unit weight • soil shear strength tests (static and cyclic) • post-cyclic volumetric strain
Input for Structural Design	• soil stiffness for shallow • foundations (e.g., springs) • P-Y data for deep foundations • down-drag on deep foundations • residual strength • lateral earth pressures • lateral spreading/ slope movement loading • post earthquake settlement • Kinematic soil-structure interaction	• subsurface profile (soil, groundwater, rock) • shear strength (peak and residual) • coefficient of horizontal subgrade reaction • seismic horizontal earth pressure coefficients • shear modulus for low strains or shear wave velocity • relationship of shear modulus with increasing shear strain • unit weight • Poisson's ratio • seismicity (PGA, design earthquake, response spectrum, ground motion time histories) • site topography • Interface shear strength	• CPT • SPT • seismic cone • piezometers • geophysical testing (shear wave velocity, resistivity, natural gamma) • vane shear test • pressuremeter	• grain size distribution • Atterberg limits • specific gravity • moisture content • unit weight • resonant column • cyclic direct simple shear test • triaxial tests (static and cyclic) • torsional shear test • direct shear interface tests

If correlations are used to obtain seismic soil design properties, and site- or region-specific relationships are not available, then the following correlations should be used:

- Table 6-2, which presents correlations for estimating initial shear modulus based on relative density, penetration resistance or void ratio.
- Shear modulus reduction and equivalent viscous damping ratio equations by Darendeli (2001) as provided in equations 6-1 through 6-7, applicable to all soils except peats and gravels.
- For gravels, shear modulus reduction and viscous damping relationships provided in Rollins, et al. (1998).
- For peats, shear modulus reduction and viscous damping relationships provided in Kramer (1996, 2000).
- Figures 6-1 through 6-3, which present charts for estimating equivalent undrained residual shear strength for liquefied soils as a function of SPT blowcounts. These figures primarily apply to sands and silty sands. It is recommended that all these figures be checked to estimate residual strength and averaged using a weighting scheme. Table 6-3 presents an example of a weighting scheme as recommended by Kramer (2007). Designers using these correlations should familiarize themselves with how the correlations were developed, assumptions used, and any limitations of the correlations as discussed in the source documents for the correlations before selecting a final weighting scheme to use for a given project. Alternate correlations based on CPT data may also be considered. For silts, laboratory testing using cyclic simple shear or cyclic triaxial testing should be conducted (see GDM Section 6-4.2.6).

Designers are encouraged to develop region or project specific correlations for these seismic design properties. Other well accepted correlations in peer reviewed publications may be used, subject to the approval of the State Geotechnical Engineer.

Regarding Figure 6-3, two curves are provided, one in which void redistribution is likely, and one in which void redistribution is not likely. Void redistribution becomes more likely if a relatively thick liquefiable layer is capped by relatively impermeable layer. Sufficient thickness of a saturated liquefiable layer is necessary to generate enough water for void redistribution to occur, and need capping by a relatively impermeable layer to prevent pore pressures from dissipating, allowing localized loosening near the top of the confined liquefiable layer. Engineering judgment will need to be applied to determine which curve in Figure 6-3 to use.

When using the above correlations, the potential effects of variations between the dynamic property from the correlation and the dynamic property for the particular soil should be considered in the analysis. The published correlations were developed by evaluating the response of a range of soil types; however, for any specific soil, the behavior of any specific soil can depart from the average, falling either above or below the average. These differences can affect the predicted response of the soil. For this reason sensitivity studies should be conducted to evaluate the potential effects of property variation on the design prediction.

For those cases where a single value of the property can be used with the knowledge that the design is not very sensitive to variations in the property being considered, a sensitivity analysis may not be required.

Table 6-2 Correlations for Estimating Initial Shear Modulus (Adapted from Kavazanjian, et al., 2011)

Reference	Correlation	Units (1)	Limitations
Seed et al. (1984)	$G_{max} = 220\ (K_2)_{max}\ (\sigma'_m)^{½}$ $(K_2)_{max} = 20(N_1)_{60}^{1/3}$	kPa	$(K_2)_{max}$ is about 30 for very loose sands and 75 for very dense sands; about 80 to 180 for dense well graded gravels; Limited to cohesionless soils
Imai and Tonouchi (1982)	$G_{max} = 15{,}560\ N_{60}^{0.68}$	kPa	Limited to cohesionless soils
Hardin (1978)	$G_{max} = (6.25/0.3+e_o^{1.3})(P_a\sigma'_m)^{0.5}OCR^k$	kP_a (1)(3)	Limited to cohesive soils P_a = atmospheric pressure
Jamiolkowski, et al.. (1991)	$G_{max} = 6.25/(e_o^{1.3})(P_a\sigma'_m)^{0.5}OCR^k$	kP_a (1)(3)	Limited to cohesive soils P_a = atmospheric pressure
Mayne and Rix (1993)	$G_{max} = 99.5(P_a)^{0.305}(q_c)^{0.695}/(e_0)^{1.13}$	kP_a (2)	Limited to cohesive soils P_a = atmospheric pressure

Notes:

(1) 1 kPa = 20.885 psf

(2) P_a and q_c in kPa

(3) The parameter k is related to the plasticity index, PI, as follows:

PI	k
0	0
20	0.18
40	0.30
60	0.41
80	0.48
>100	0.50

Modulus Reduction Curve (Darendeli, 2001) – The modulus reduction curve for soil, as a function of shear strain, should be calculated as shown in Equations 6-1 and 6-2.

$$\frac{G}{G_{max}} = \frac{1}{1+\left(\frac{\gamma}{\gamma_r}\right)^a} \quad (6\text{-}1)$$

where,

G = shear modulus at shear strain γ, in the same units as G_{max}

γ = shear strain (%), and

a = 0.92

γ_r is defined in Equation 6-2 as:

$$\gamma_r = \left(\phi_1 + \phi_2 \times PI \times OCR^{\phi_3}\right) \times \sigma_0^{'\phi_4} \quad (6\text{-}2)$$

where,

ϕ_1 = 0.0352; ϕ_2 = 0.0010; $^{\phi_3}$ = 0.3246; $^{\phi_4}$ = 0.3483 (from regression),

OCR = overconsolidation ratio for soil

σ'_0 = effective vertical stress, in atmospheres, and

PI = plastic index, in %

Damping Curve (Darendeli, 2001) – The damping ratio for soil, as a function of shear strain, should be calculated as shown in Equations 6-3 through 6-7.

Initial step: Compute closed-form expression for Masing Damping for *a* = 1.0 (standard hyperbolic backbone curve):

$$D_{Masing,\,a}=1(\gamma)\ [\%]=\frac{100}{\pi}\left[4\frac{\gamma-\gamma_r\ln\left(\frac{\gamma+\gamma_r}{\gamma_r}\right)}{\frac{\gamma^2}{\gamma+\gamma_r}}-2\right] \quad (6\text{-}3)$$

For other values of *a* (e.g., a = 0.92, as used to calculate G):

$$D_{Masing,\,a}(\gamma)\ [\%]=c_1(D_{masing,\,a=1})+c_2(D_{masing,\,a=1})^2+c_3(D_{masing,\,a=1})^3 \quad (6\text{-}4)$$

Where,

c_1 = $0.2523 + 1.8618a - 1.1143a^2$
c_2 = $-0.0095 - 0.0710a + 0.0805a^2$
c_3 = $0.0003 + 0.0002a - 0.0005a^2$

Final step: Compute damping ratio as function of shear strain:

$$D(\gamma)=D_{\min}+bD_{Masing}(\gamma)\left(\frac{G}{G_{\max}}\right)^{0.1} \quad (6\text{-}5)$$

Where,

$$D_{\min}=\left(\phi_6+\phi_7\times PI\times OCR^{\phi_8}\right)\times\sigma_0^{'\,\phi_9}\times\left(1+\phi_{10}\ln(freq)\right) \quad (6\text{-}6)$$

$$b=\phi_{11}+\phi_{12}\times\ln(N) \quad (6\text{-}7)$$

Where:

freq = frequency of loading, in Hz
N = number of loading cycles
φ_6 = 0.8005;
φ_7 = 0.0129;
φ_8 = -0.1069;
φ_9 = -0.2889;
φ_{10} = 0.2919;
φ_{11} = 0.6329;
φ_{12} = -0.0057

Table 6-3 Weighting Factors for Residual Strength Estimation (Kramer, 2007)

Model	Weighting Factor
Idriss	0.2
Olson-Stark	0.2
Idriss-Boulanger	0.2
Hybrid	0.4

Figure 6-1 Estimation of Residual Strength Ratio from SPT Resistance (Olson and Stark, 2002)

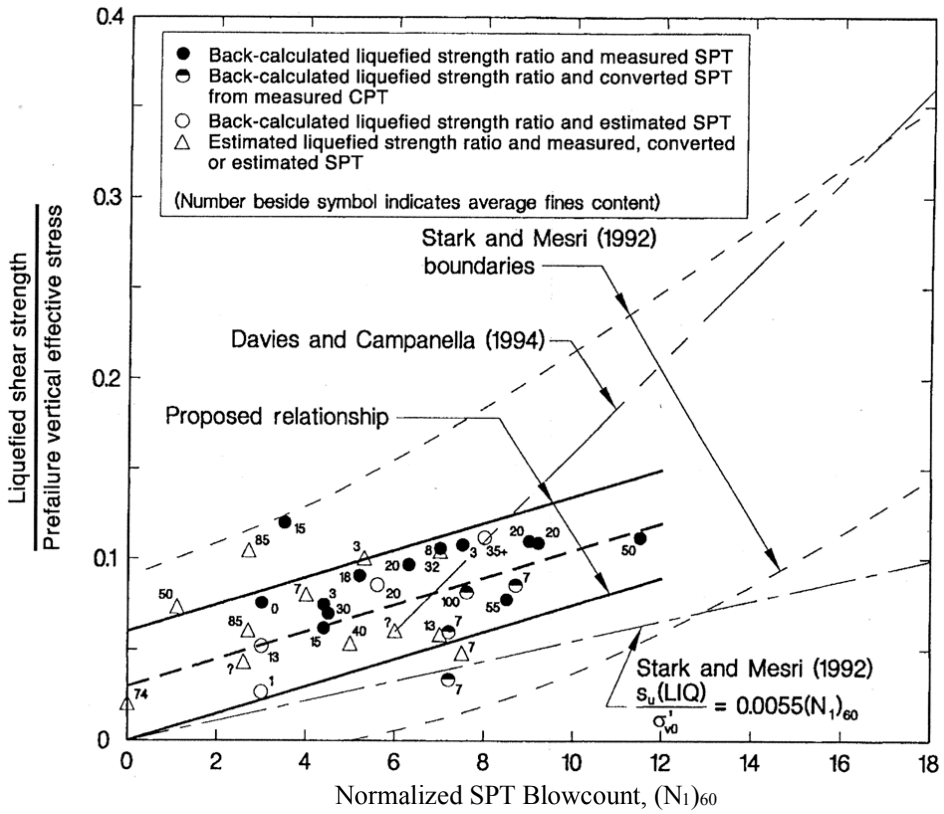

Figure 6-2 Estimation of Residual Strength Ratio from SPT Resistance (Idriss and Boulanger, 2007)

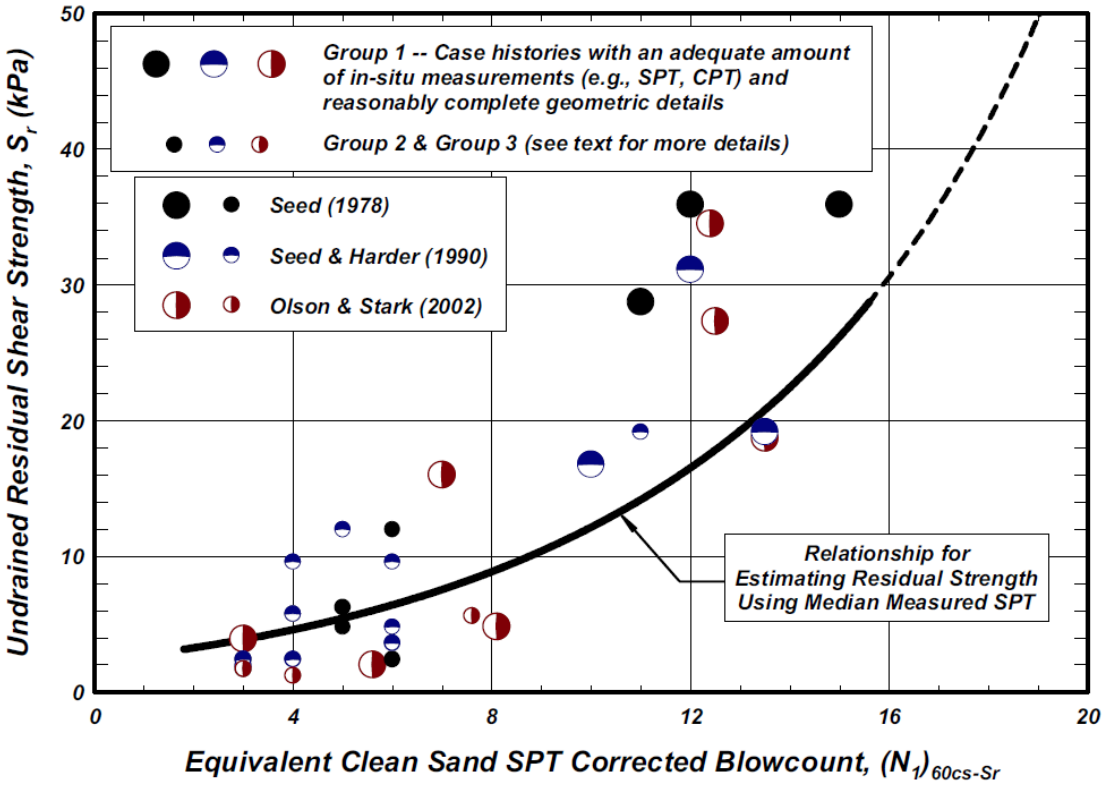

Figure 6-3 Estimation of Residual Strength Ratio from SPT Resistance (Idriss and Boulanger, 2007)

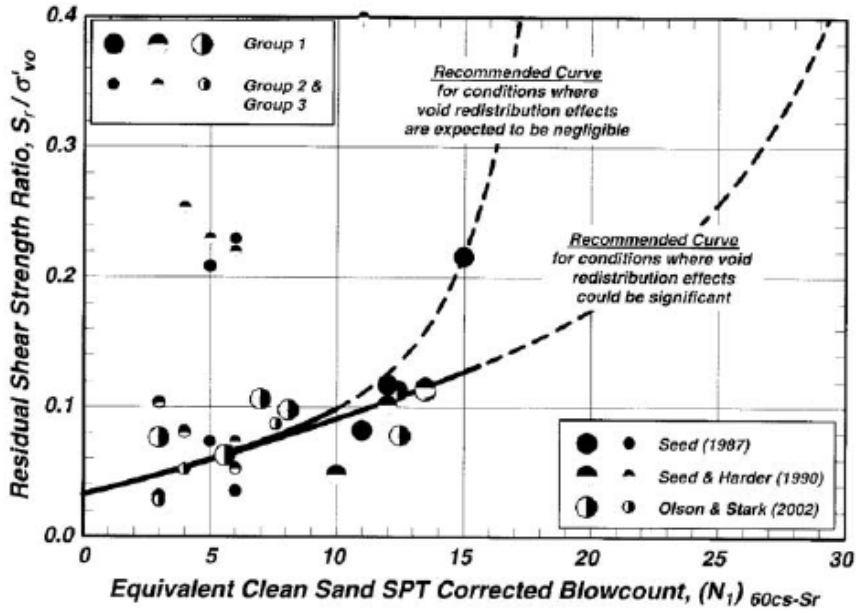

Figure 6-4 Variation of Residual Strength Ratio with SPT Resistance and Initial Vertical Effective Stress Using Kramer-Wang Model (Kramer, 2007)

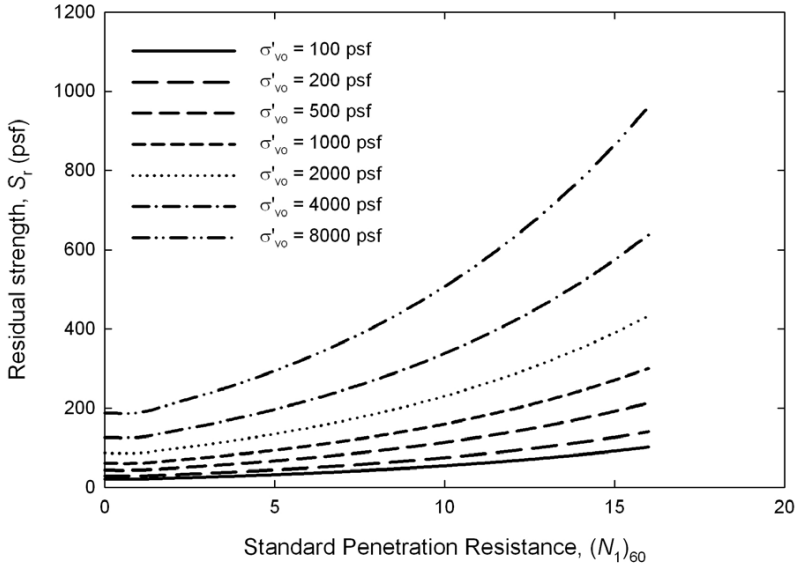

6-2.3 Information for Structural Design

The geotechnical designer shall recommend a design earthquake ground motion based on the SEE for normal bridges and both the SEE and FEE for essential and critical bridges, and shall evaluate geologic hazards for the project. For code based ground motion analysis, the geotechnical designer shall provide the Site Class B/C boundary spectral accelerations at periods of 0.2 and 1.0 seconds, the PGA, the site class, and site coefficients for the PGA and spectral accelerations to account for the effect of the site class on the design accelerations.

In addition, the geotechnical designer should evaluate the site and soil conditions to the extent necessary to provide the following input for structural design, with consideration to the structure classification (i.e., normal, essential, or critical bridges) and the hazard level required (i.e., SEE for normal bridges, and both SEE and FEE for essential and critical bridges):

- Foundation spring values for dynamic loading (lateral and vertical), as well as geotechnical parameters for evaluation of sliding resistance applicable to the foundation design. If liquefaction is possible, spring values for liquefied conditions should also be provided (primarily applies to deep foundations, as in general, shallow footings are not used over liquefied soils).
- Earthquake induced earth pressures (active and passive) for retaining structures and below grade walls, and other geotechnical parameters, such as sliding resistance, needed to complete the seismic design of the wall.
- If requested by the structural designer, passive soil springs to use to model the abutment fill resistance to seismic motion of the bridge.
- Impacts of seismic geologic hazards including fault rupture, liquefaction, lateral spreading, flow failure, and slope instability on the structure, including estimated loads and deformations acting on the structure due to the effects of the geologic hazard.
- If requested by the structural designer, for long bridges, potential for incoherent ground motion effects.
- Options to mitigate seismic geologic hazards, such as ground improvement. Note that seismic soil properties used for design should reflect the presence of the soil improvement.

6-3 Seismic Hazard and Site Ground Motion Response Requirements

For most projects, design code/specification based seismic hazard and ground motion response (referred to as the "General Procedure" in the AASHTO *Guide Specifications for LRFD Seismic Bridge Design*) are appropriate and shall be used, except that the 2014 seismic hazard data and maps described previously shall be used instead of the 2002 hazard information provided in the AASHTO Specifications. However, a site specific hazard or ground motion response analysis is required in situations for which the General Procedure is not applicable, and may also be considered for situations in which the General Procedure is applicable.

6-3.1 Determination of Seismic Hazard Level

All transportation structures (e.g., bridges, pedestrian bridges, walls, , etc.) classified as "other" or "normal" (i.e., not critical or essential) are designed for the SEE (see Section 6-1.2.1) based on a hazard level of 7 percent PE in 75 years (i.e., an approximately 1,000 year return period). For essential or critical bridges, a two level seismic hazard design is required: the Safety Evaluation Earthquake (SEE) and the Functional Evaluation Earthquake (FEE). In this case, the SEE hazard level is as defined above. The FEE is based on a hazard level of 30 percent probability of exceedance in 75 years (or 210-year return period).

For buildings on terminal structures, the design hazard level shall be consistent with IBC requirements, which uses a risk adjusted 2,475 year event as its basis (MCER).

The AASHTO *Guide Specifications for LRFD Seismic Bridge Design* shall be used for WSDOT transportation facilities for code/specification based seismic hazard evaluation, except that Figures 6-5, 6-6, and 6-7 shall be used to estimate the PGA, 0.2 sec. spectral acceleration (S_s), and 1.0 sec. spectral acceleration values (S_1), respectively, for the SEE. By definition for Figures 6-5, 6-6, and 6-7, PGA, S_S and S_1 are for the Site Class B/C boundary (very hard or very dense soil or soft rock) conditions. The PGA contours in Figure 6-5, in addition S_s and S_1 in Figures 6-6 and 6-7, are based on information published by the USGS National Seismic Hazards Mapping Project (USGS, 2014) and supersede the AASHTO *LRFD Bridge Design Specifications* and the AASHTO *Guide Specifications for LRFD Seismic Bridge Design*. Interpolation between contours in Figures 6-5, 6-6, and 6-7 should be used when establishing the PGA for the Site Class B/C boundary for a project. High resolution images of these three acceleration maps are provided in Appendix 6-B.

Figure 6-5 Peak Horizontal Acceleration (%G) for 7% Probability of Exceedance in 75 Years for Site Class B/C Boundary (Adapted From USGS 2014)

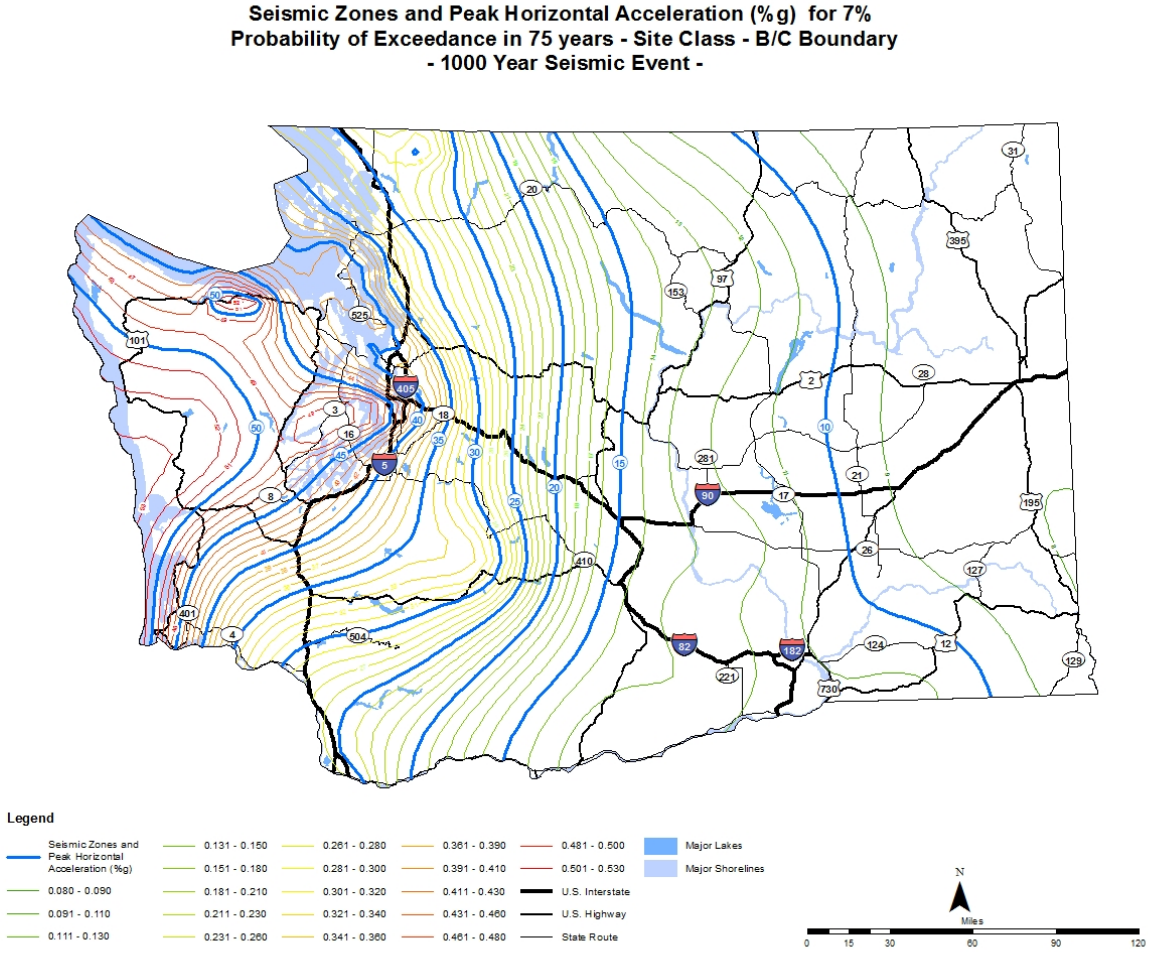

Figure 6-6 Horizontal Spectral Acceleration at 0.2 Second Period (%g) for 7% Probability of Exceedance in 75 Years with 5% of Critical Damping for Site Class B/C Boundary (Adapted from USGS 2014)

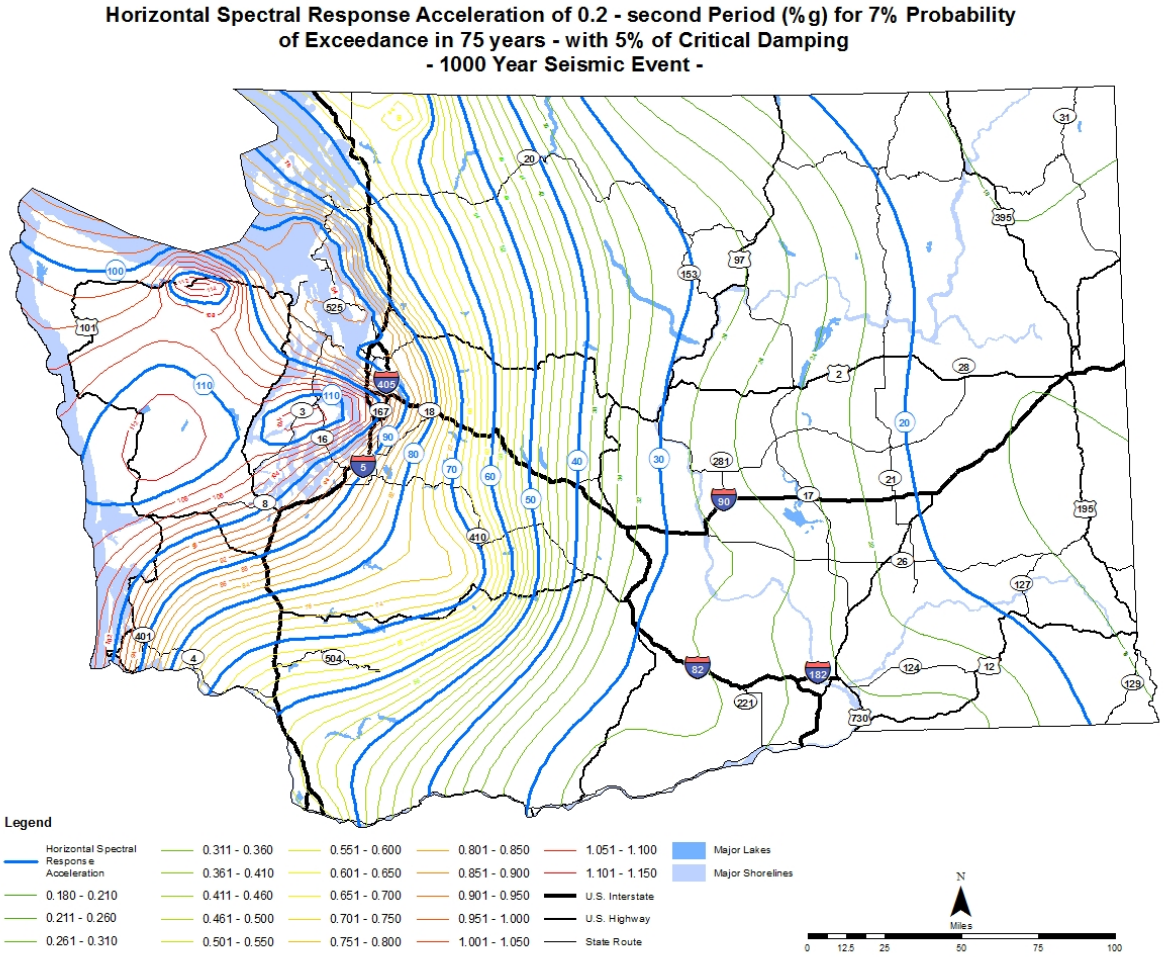

Figure 6-7 Horizontal Spectral Acceleration at 1.0 Second Period (%g) for 7% Probability of Exceedance in 75 Years With 5% of Critical Damping for Site Class B/C Boundary (Adapted from USGS 2014)

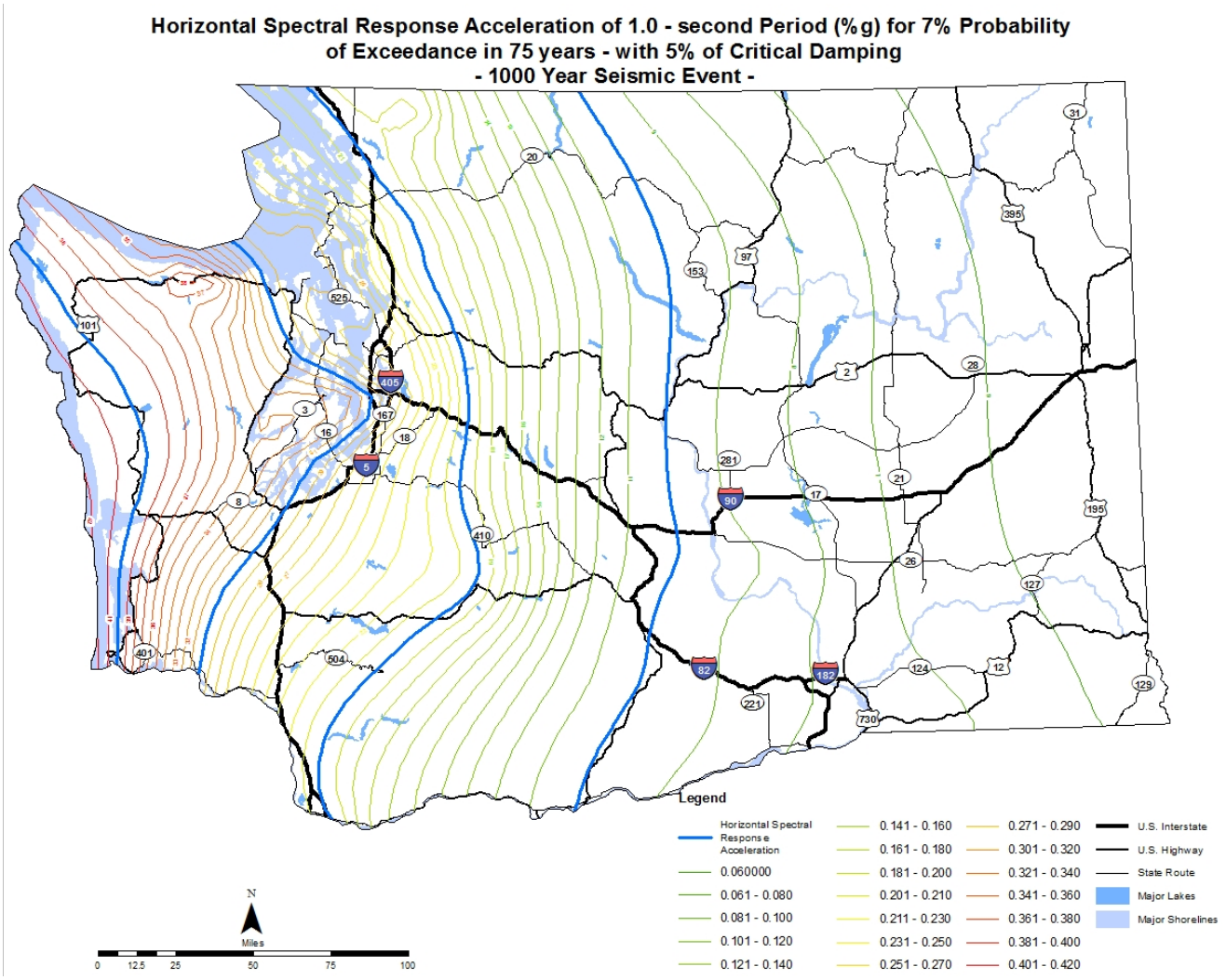

To obtain the PGA, 0.2 sec. spectral acceleration (S_s), and 1.0 sec. spectral acceleration values (S_1) for the FEE i.e., 30 percent probability of exceedance in 75 years (or 210-year return period), go to the USGS website at:
https://earthquake.usgs.gov/hazards/interactive

When a transportation structure (e.g., bridges, walls, and WSF terminal structures such as docks, etc.) is designated as critical or essential by WSDOT, a more stringent seismic hazard level may be required by the State Bridge Engineer. If a different hazard level than that specified herein and in the AASHTO LRFD Seismic design specifications is selected, the most current seismic hazard maps from the USGS National Seismic Hazards Mapping Project should be used, unless a site specific seismic hazard analysis is conducted, subject to the approval of the State Bridge Engineer and State Geotechnical Engineer.

A site specific hazard analysis should be considered in the following situations:

- A more accurate assessment of hazard level is desired, or
- Information about one or more active seismic sources for the site has become available since the USGS Seismic Hazard Maps specified herein (USGS 2014) were developed, and the new seismic source information may result in a significant change of the seismic hazard at the site.

If the site is located within 6 miles of a known active fault capable of producing a magnitude 5 or greater earthquake and near fault effects are not adequately modeled in the development of ground motion maps used, directivity and directionality effects shall be addressed as described in Article 3.4.3.1 of the AASHTO *Guide Specifications for LRFD Seismic Bridge Design* and its commentary.

If a site specific hazard analysis is conducted, it shall be conducted in accordance with AASHTO *Guide Specifications for LRFD Seismic Bridge Design* and GDM Appendix 6-A.

If a site specific probabilistic seismic hazard analysis (PSHA) is conducted, it shall be conducted in a manner to generate a uniform-hazard acceleration response spectrum considering a 7 percent probability of exceedance in 75 years for spectral values over the entire period range of interest. This analysis shall follow the same basic approach as used by the USGS in developing seismic hazards maps for AASHTO and for the 2014 maps included in this GDM chapter. In this approach it is necessary to establish the following:

- The contributing seismic sources,
- A magnitude fault-rupture-length or source area relation for each contributing fault or source area to estimate an upper-bound earthquake magnitude for each source zone,
- Median ground motion attenuation equations for acceleration response spectral values and their associated standard deviations,
- A magnitude-recurrence relation for each source zone, and
- Weighting factors, with justification, for all branches of logic trees used to establish ground shaking hazards.

AASHTO allows site-specific ground motion hazard levels to be based on a deterministic seismic hazard analysis (DSHA) in regions of known active faults, provided that deterministic spectrum is no less than two-thirds of the probabilistic spectrum (see AASHTO Article 3.10.2.2). This requires that:

- The ground motion hazard at a particular site is largely from known faults (e.g., “random” seismicity is not a significant contributor to the hazard), and
- The recurrence interval for large earthquakes on the known faults are generally less than the return period corresponding to the specified seismic hazard level (e.g., the earthquake recurrence interval is less than a return period of 1,000 years that corresponds to a seismic hazard level of 7 percent probability of exceedance in 75 years).

Currently, these conditions are generally not met for sites in Washington State. Approval by the State Geotechnical Engineer and State Bridge Engineer is required before DSHA-based ground motion hazard level is used on a WSDOT project.

Where use of a deterministic spectrum is appropriate, the spectrum shall be either:

- The envelope of a median spectra calculated for characteristic maximum magnitude earthquakes on known active faults; or
- The deterministic spectra for each fault, and in the absence of a clearly controlling spectrum, each spectrum should be used.

Uncertainties in source modeling and parameter values shall be taken into consideration in the PSHA and DSHA. Detailed documentation of seismic hazard analysis shall be provided.

For buildings, restrooms, and shelters, specification based seismic design parameters required by the most current version of the International Building Code (IBC) shall be used. For covered pedestrian walkways, the AASHTO *LRFD Bridge Design Specifications* or AASHTO *Guide Specifications for LRFD Seismic Bridge Design* shall be used.

The seismic design requirements of the IBC are based on a hazard level of 2 percent PE in 50 years which has been risk adjusted. The 2 percent PE in 50 years hazard level corresponds to the maximum considered earthquake (MCE), and the risk adjusted earthquake (MCER) corresponds to 1 percent probability of collapse in 50 years. The IBC identifies procedures to develop a maximum considered earthquake acceleration response spectrum, at the ground surface by adjusting Site Class B/C boundary spectra for local site conditions, similar to the methods used by AASHTO except that the probability of exceedance is lower (i.e., 2 percent in 50 years versus 7 percent in 75 years). However, the IBC defines the design response spectrum as two-thirds of the value of the maximum considered earthquake acceleration response spectrum. As is true for transportation structures, for critical or unique structures, for sites characterized as soil profile Type F (thick sequence of soft soils in the IBC) or liquefiable soils, or for soil conditions that do not adequately match the specification based soil profile types, site specific response analysis may be required as discussed in Appendix 6-A.

6-3.2 Site Ground Motion Response Analysis

6-3.2.1 *General Procedure*

The AASHTO Guide Specifications for LRFD Bridge Seismic Design require that site effects be included in determining seismic loads for design of bridges. Article 3.4.1 of the AASHTO Guide Specifications for LRFD Bridge Seismic Design (also Article 3.10.4.1 of the AASHTO *LRFD Bridge Design Specifications*) provide requirements for developing a design response spectrum when using the General Procedure. When conducting a seismic design based on the General Procedure, the site response spectrum shall be developed in accordance with the AASHTO Guide Specifications for LRFD Bridge Seismic Design, except that the USGS 2014 deaggregation/ground motions as depicted in Figures 6-5, 6-6, and 6-7 shall be used to establish the PGA, Ss, and S1 accelerations used as input. With regard to characterization of the site subsurface conditions, Tables 6-4, 6-5, and 6-6 shall be used as input to establish the site seismic response spectrum instead of the site coefficients provided in the AASHTO specifications.

The guide specifications characterize all subsurface conditions with six Site Classes (A through F). The site soil coefficients for PGA (F_{pga}), SS (F_a), and S_1 (F_v) provided in the Guide Specifications are updated herein for use with the 2014 seismic acceleration maps. Site soil coefficients for five of the Site Classes (A through E) are provided in Tables 6-4, 6-5, and 6-6. Code/specification based response spectra that include the effect of ground motion amplification or de-amplification from the soil/rock stratigraphy at the site can be developed from the PGA, S_S, S_1 and the Site-Class based site coefficients F_{pga}, F_a, and F_v. Note that the site class should be determined considering the soils up to the ground surface, not just soil below the foundations.

The geotechnical designer shall determine the appropriate site coefficient (F_{pga} for PGA, F_a for S_S, and F_v for S_1) to construct the code/specification based response spectrum for the specific site subsurface conditions.

Table 6-4 Values of Site Coefficient, F_{pga}, for Peak Ground Acceleration

Site Class	Mapped Peak Ground Acceleration Coefficient (PGA)					
	PGA ≤ 0.10	PGA = 0.2	PGA = 0.3	PGA = 0.4	PGA = 0.5	PGA ≥ 0.6
A	0.8	0.8	0.8	0.8	0.8	0.8
B	0.9	0.9	0.9	0.9	0.9	0.9
C	1.3	1.2	1.2	1.2	1.2	1.2
D	1.6	1.4	1.3	1.2	1.1	1.1
E	2.4	1.9	1.6	1.4	1.2	1.1
F	*	*	*	*	*	*

* Site-specific response geotechnical investigation and dynamic site response analysis should be considered.

Note: Use straight line interpolation for intermediate values of *PGA*.

Table 6-5 Values of Site Coefficient, F_a, for 0.2-sec Period Spectral Acceleration

Site Class	Mapped Spectral Acceleration Coefficient at Period 0.2 sec (Ss)					
	Ss ≤ 0.25	Ss = 0.50	Ss = 0.75	Ss = 1.00	Ss = 1.25	Ss ≥ 1.50
A	0.8	0.8	0.8	0.8	0.8	0.8
B	0.9	0.9	0.9	0.9	0.9	0.9
C	1.3	1.3	1.2	1.2	1.2	1.2
D	1.6	1.4	1.2	1.1	1.0	1.0
E	2.4	1.7	1.3	1.0	0.9	0.9
F	*	*	*	*	*	*

* Site-specific response geotechnical investigation and dynamic site response analysis should be considered,

Note: Use straight line interpolation for intermediate values of S_s.

Table 6-6 Values of Site Coefficient, F_v, for 1.0-sec Period Spectral Acceleration

Site Class	Mapped Spectral Acceleration Coefficient at Period 1.0 sec (S1)					
	S1 ≤ 0.1	S1 = 0.2	S1 = 0.3	S1 = 0.4	S1 = 0.5	S1 ≥ 0.6
A	0.8	0.8	0.8	0.8	0.8	0.8
B	0.8	0.8	0.8	0.8	0.8	0.8
C	1.5	1.5	1.5	1.5	1.5	1.4
D	2.4	2.2	2.0	1.9	1.8	1.7
E	4.2	3.3	2.8	2.4	2.2	2.0
F	*	*	*	*	*	*

* Site-specific response geotechnical investigation and dynamic site response analysis should be considered,

Note: Use straight line interpolation for intermediate values of S_1.

6-3.2.2 *Site Specific Ground Motion Response Analysis*

When to Conduct: A site specific ground motion response analysis shall be performed in the following situations:

- The facility is identified as critical or essential,
- Sites where geologic conditions are likely to result in un-conservative spectral acceleration values if the generalized code response spectra is used (e.g., within the upper 100 ft a sharp change in impedance between subsurface strata is present, etc.), or
- Site subsurface conditions are classified as Site Class F, and in some cases Site Class E as identified in Table 6-5.

There may be other reasons why the general procedure cannot be used, such as the situation where the spectral acceleration coefficient at 1.0 second is greater than the spectral acceleration coefficient at 0.2 second. In such cases, a site specific ground motion analysis should be conducted. A site specific ground motion response analysis should also be considered for sites where:

- the effects of liquefaction on the ground motion response could be overly conservative.
- basin effects could have a strong impact on the ground motion. However, the current (2014) acceleration maps partially consider basin effects. Whether or not basin effects should be considered for a particular site will be determined on a case by case basis as directed by the State Geotechnical Engineer and State Bridge Engineer.

Note that where the response spectrum is developed using a site-specific hazard analysis, a site specific ground motion response analysis, or both, the AASHTO specifications require that the spectrum not be lower than two-thirds of the response spectrum at the ground surface determined using the general procedure as specified in the AASHTO *Guide Specifications for LRFD Seismic Bridge Design*, Article 3.4.1. For this comparison, the general procedure response spectrum is adjusted by the site coefficients (e.g., F_{pga}) in Tables 6-4, 6-5, and 6-6 in the region of $0.5T_F$ to $2T_F$ of the spectrum, where T_F is the bridge fundamental period. For other analyses such as liquefaction assessment and retaining wall design, the free field acceleration at the ground surface determined from a site specific analysis should not be less than two-thirds of the PGA multiplied by the specification based site coefficient F_{pga}.

No site coefficients are available for Site Class F and in some cases Site Class E. In these cases, a site specific ground response analysis shall be conducted (see the AASHTO Guide Specifications for LRFD Bridge Seismic Design for additional details on site conditions that are considered to be included in Site Class F). Furthermore, there are no site coefficients for liquefiable soils. No consensus currently exists regarding the appropriate site coefficients for these cases. When estimating the minimum ground surface response spectrum using two-thirds of the response spectrum from the specification based procedures provided in the AASHTO *Guide Specifications for LRFD Seismic Bridge Design* and as provided herein, unless directed otherwise by the State Geotechnical Engineer and the State Bridge Engineer, the following approach shall be used:

- For liquefiable sites, use the specification based site coefficient for soil conditions without any modifications for liquefaction. This approach is believed to be conservative for higher frequency motions (i.e., TF < 1.0 sec).
- If a site specific ground response analysis is conducted, the response spectrum shall not be lower than two-thirds of the non-liquefied specification based spectrum, unless specifically approved by the State Bridge and Geotechnical Engineers to go lower. When accepting a spectrum lower than the specification based spectrum, the uncertainties in the analysis method should be carefully reviewed, particularly for longer periods (i.e., T > 1.0 sec.) where increases in the spectral ordinate may occur. Because of this, for structures that are characterized as having a fundamental period, TF, greater than 1.0 sec., a site specific ground response analysis shall be conducted if liquefiable soils are determined to be present.

Sites that contain a strong impedance contrast, i.e., a boundary between adjacent layers with shear wave velocities that differ by a factor of 2 or more are not specifically considered in the site soil coefficients and a site- specific seismic ground response analysis should be conducted. The strong impedance contrast can occur where a thin soil profile (e.g., < 20 to 30 feet) overlies rock or where layers of soft and stiff soils occur.

How to Conduct: Input ground motion (i.e., acceleration time histories) selection and processing (e.g., matching through scaling with consideration to a target spectrum) for site specific ground motion response analyses should be conducted using procedures provided in Kramer et al. (2012). A WSDOT website link to the ground motion selection and processing tool cited in that reference (i.e., a modified version of SigmaSpectra with a ground motion database developed for Washington) is as follows:
http://www.wsdot.wa.gov/Business/MaterialsLab/GeotechnicalServices.htm

Additional background and guidance on the subject of input ground motion selection and processing to produce a site specific base rock spectrum for conducting a site specific ground motion response analysis is provided in Kramer (1996), Bommer and Acevedo (2004), NEHRP (2011), and Kavazanjian, et al. (2011).

Once the input (i.e., base rock) ground motions are established, the frequency domain site specific response spectra needed for structure design (also commonly referred to as a site response analysis) is developed based on the requirements in Appendix 6-A.5. For the more complex sites or structures, a nonlinear time history analysis may be necessary. Appendix 6-A.6 provides requirements for conducting time history analysis to obtain the needed ground motions for structure design.

See Appendix 6-A for additional requirements and guidance regarding site specific ground response analyses, including requirements for time history analyses. Matasovic and Hashash (2012) also provide a good overview of the process used to conduct site specific ground motion response analysis from development of input ground motions to development of the structure design response spectra.

6-3.3 Need for Peer Review of Site Specific Hazard and Ground Motion Response Analyses

If a site specific hazard analysis is conducted, it shall be independently peer reviewed in all cases by someone with expertise in site specific seismic hazard analyses. When the site specific hazard analysis is conducted by a consultant working for the State or a design-builder, the peer reviewer shall not be a staff member of the consultant(s) doing the engineering design for the project, even if not part of the specific team within those consultants doing the project design. The expert peer reviewer must be completely independent of the design team consultant(s).

A site specific ground motion response analysis to establish a response spectrum that is lower than two-thirds of the specification based spectrum shall be approved by the State Geotechnical and Bridge Engineers. If the site specific response analysis is conducted for this purpose, the site specific analysis shall be independently peer reviewed. The peer reviewer shall meet the same requirements as described in the previous paragraph, except that their expertise must be in the site specific ground motion response analysis technique used to conduct the analysis.

6-3.4 IBC for Site Response

The IBC, Sections 1613 through 1615, provides procedures to estimate the earthquake loads for the design of buildings and similar structures. Earthquake loads per the IBC are defined by acceleration response spectra, which can be determined through the use of the IBC general response spectrum procedures or through site-specific procedures. The intent of the IBC MCE is to reasonably account for the maximum possible earthquake at a site, to preserve life safety and prevent collapse of the building.

The general response spectrum per the IBC utilizes mapped Maximum Considered Earthquake (MCE) spectral response accelerations at short periods (S_s) and at 1-second (S_1) to define the seismic hazard at a specific location in the United States.

The IBC uses the six site classes, Site Class A through Site Class F, to account for the effects of soil conditions on site response. The geotechnical designer shall identify the appropriate Site Class for the site. Note that the site class should be determined considering the soils up to the ground surface, not just soil below the foundations.

Once the Site Class and mapped values of S_s and S_1 are determined, values of the Site Coefficients F_a and F_v (site response modification factors) can be determined. The Site Coefficients and the mapped spectral accelerations S_s and S_1 can then be used to define the MCE and design response spectra. The PGA at the ground surface may be estimated as 0.4 of the 0.2 sec design spectral acceleration.

For sites where Site Class F soils are present, the IBC requires that a site-specific geotechnical investigation and dynamic site response analysis be completed (see Appendix 6-A). Dynamic site response analysis may not be required for liquefiable soil sites for structures with predominant periods of vibration less than 0.5 seconds.

6-3.5 Determination of A_s for Geotechnical Seismic Design

The ground acceleration A_s is determined by multiplying the PGA from Figure 6-8, which provides the ground acceleration for Class B/C rock/soil conditions, by its site coefficient F_{pga} (Table 6-4) to determine A_s for other site classes. A_s determined in this manner is used for assessing the potential for liquefaction and for the estimation of seismic earth pressures and inertial forces for retaining wall and slope design. For liquefaction assessment and retaining wall and slope design, the site coefficient presented in Table 6-4 shall be used, unless a site specific evaluation of ground response conducted in accordance with these AASHTO Guide specifications and Section 6-3 and Appendix 6-A is performed. Note that the site class should be determined considering the soils up to the ground surface, not just soil below the foundations.

6-3.6 Earthquake Magnitude

Assessment of liquefaction and lateral spreading require an estimate of the earthquake magnitude. The magnitude should be assessed using the seismic deaggregation data for the site, available through the USGS national seismic hazard website (earthquake.usgs.gov/hazards/) as discussed in Appendix 6-A. The deaggregation used shall be for a seismic hazard level consistent with the hazard level used for the structure for which the liquefaction analysis is being conducted (typically, a probability of exceedance of 5 percent in 50 years in accordance with the AASHTO *Guide Specifications for LRFD Seismic Bridge Design*). Additional discussion and guidance regarding the selection of earthquake magnitude values are provided in the AASHTO Guide Specifications for LRFD Bridge Seismic Design.

6-4 Seismic Geologic Hazards

The geotechnical designer shall evaluate seismic geologic hazards including fault rupture, liquefaction, lateral spreading, ground settlement, and slope instability. The potential effects associated with seismic geologic hazards shall be evaluated by the geotechnical designer.

6-4.1 Fault Rupture

Washington State is recognized as a seismically active region; however, only a relatively small number of active faults have been identified within the state. Thick sequences of recent geologic deposits, heavy vegetation, and the limited amount of instrumentally recorded events on identified faults are some of the factors that contribute to the difficulty in identifying active faults in Washington State. Considerable research is ongoing throughout Washington State to identify and characterize the seismicity of active faults, and new technology makes it likely that additional surface faults will be identified in the near future. The best source of fault information that can be considered for design is the USGS at the following website: https://earthquake.usgs.gov/hazards/qfaults

The potential impacts of fault rupture include abrupt, large, differential ground movements and associated damage to structures that might straddle a fault, such as a bridge. Until the recent application of advanced mapping techniques (e.g., LIDAR and aeromagnetics) in combination with trenching and age dating of apparent ground offsets, little information was available regarding the potential for ground surface fault rupture hazard in Washington State.

In view of the advances that will likely be made in the area of fault identification, the potential for fault rupture should be evaluated and taken into consideration in the planning and design of new facilities. These evaluations should incorporate the latest information identifying potential Holocene ground deformation.

6-4.2 Liquefaction

Liquefaction has been one of the most significant causes of damage to bridge structures during past earthquakes (ATC-MCEER Joint Venture, 2002). Liquefaction can damage bridges and structures in many ways including:

- Modifying the nature of ground motion;
- Bearing failure of shallow foundations founded above liquefied soil;
- Changes in the lateral soil reaction for deep foundations;
- Liquefaction induced ground settlement;
- Lateral spreading of liquefied ground;
- Large displacements associated with low frequency ground motion;
- Increased earth pressures on subsurface structures;
- Floating of buoyant, buried structures; and
- Retaining wall failure.

Liquefaction refers to the significant loss of strength and stiffness resulting from the generation of excess pore water pressure in saturated, predominantly cohesionless soils. Kramer (1996) provides a detailed description of liquefaction including the types of liquefaction phenomena, evaluation of liquefaction susceptibility, and the effects of liquefaction.

All of the following general conditions are necessary for liquefaction to occur:

- The presence of groundwater, resulting in a saturated or nearly saturated soil.
- Predominantly cohesionless soil that has the right gradation and composition. Liquefaction has occurred in soils ranging from low plasticity silts to gravels. Clean or silty sands and non-plastic silts are most susceptible to liquefaction.
- A sustained ground motion that is large enough and acting over a long enough period of time to develop excess pore-water pressure, equal to the effective overburden stress, thereby significantly reducing effective stress and soil strength,
- The state of the soil is characterized by a density that is low enough for the soil to exhibit contractive behavior when sheared undrained under the initial effective overburden stress.

Methods used to assess the potential for liquefaction range from empirically based design methods to complex numerical, effective stress methods that can model the time-dependent generation of pore-water pressure and its effect on soil strength and deformation. Furthermore, dynamic soil tests such as cyclic simple shear or cyclic triaxial tests can be used to assess liquefaction susceptibility and behavior to guide input for liquefaction analysis and design.

Liquefaction hazard assessment includes identifying soils susceptible to liquefaction, evaluating whether the design earthquake loading will initiate liquefaction, and estimating the potential effects of liquefaction on the planned facility. Liquefaction hazard assessment is required in the AASHTO *Guide Specifications for LRFD Seismic Bridge Design* if the site Seismic Design Category (SDC) is classified as SDC C or D, and the soil is identified as being potentially susceptible to liquefaction (see Section 6-4.2.1). The SDC is defined on the basis of the site-adjusted spectral acceleration at 1 second (i.e., $S_{D1} = F_v S_1$) where SDC C is defined as $0.30 \leq S_{D1} < 0.5$ and SDC D is defined as $S_{D1} \geq 0.50$. Where loose to very loose, saturated sands are within the subsurface profile such that liquefaction could impact the stability of the structure, the potential for liquefaction in SDC B ($0.15 \leq S_{D1} < 0.3$) should also be considered as discussed in the AASHTO *Guide Specifications for LRFD Seismic Bridge Design*.

To determine the location of soils that are adequately saturated for liquefaction to occur, the seasonally averaged groundwater elevation should be used. Groundwater fluctuations caused by tidal action or seasonal variations will cause the soil to be saturated only during a limited period of time, significantly reducing the risk that liquefaction could occur within the zone of fluctuation.

For sites that require an assessment of liquefaction, the potential effects of liquefaction on soils and foundations shall be evaluated. The assessment shall consider the following effects of liquefaction:

- Loss in strength in the liquefied layer(s) with consideration of potential for void redistribution due to the presence of impervious layers within or bounding a liquefiable layer
- Liquefaction-induced ground settlement, including downdrag on deep foundation elements
- Slope instability induced by flow failures or lateral spreading

During liquefaction, pore-water pressure build-up occurs, resulting in loss of strength and then settlement as the excess pore-water pressures dissipate after the earthquake. The potential effects of strength loss and settlement include:

- **Slope Instability Due to Flow Failure or Lateral Spreading** – The strength loss associated with pore-water pressure build-up can lead to slope instability. Generally, if the factor of safety against liquefaction is less than approximately 1.2 to 1.3, a potential for pore-water pressure build-up will occur, and the effects of this build-up shall be assessed. If the soil liquefies, slope stability is determined using the residual strength of the soil to assess the potential for flow failure. The residual strength of liquefied soils can be estimated using empirical methods. Loss of soil resistance can allow abutment soils to move laterally, resulting in bridge substructure distortion and unacceptable deformations and moments in the superstructure. See Section 6-4.3.1 for additional requirements to assess flow failure and lateral spreading.

- **Reduced foundation bearing resistance** – The residual strength of liquefied soil is often a fraction of nonliquefied strength. This loss in strength can result in large displacements or bearing failure. For this reason spread footing foundations are not recommended where liquefiable soils exist unless the spread footing is located below the maximum depth of liquefaction or soil improvement techniques are used to mitigate the effects of liquefaction.
- **Reduced soil stiffness and loss of lateral support for deep foundations** – This loss in strength can change the lateral response characteristics of piles and shafts under lateral load.

Vertical ground settlement will occur as excess pore-water pressures induced by liquefaction dissipate, resulting in downdrag loads on and loss of vertical support for deep foundations. If liquefaction-induced downdrag loads can occur, the downdrag loads shall be assessed as specified in Sections 6-5.3 and 8-12.2.7, and in Article 3.11.8 in the AASHTO *LRFD Bridge Design Specifications*.

The effects of liquefaction will depend in large part on the amount of soil that liquefies and the location of the liquefied soil with respect to the foundation. On sloping ground, lateral flow, spreading, and slope instability can occur even on gentle slopes on relatively thin layers of liquefiable soils, whereas the effects of thin liquefied layer on the lateral response of piles or shafts (without lateral ground movement) may be negligible. Likewise, a thin liquefied layer at the ground surface results in essentially no downdrag loads, whereas the same liquefied layer deeper in the soil profile could result in large downdrag loads. Given these potential variations, the site investigation techniques that can identify relatively thin layers should be used part of the liquefaction assessment.

The following sections provide requirements for liquefaction hazard assessment and its mitigation.

6-4.2.1 *Methods to Evaluate Potential Susceptibility of Soil to Liquefaction*

Evaluation of liquefaction potential shall be completed based on soil characterization using in-situ testing such as Standard Penetration Tests (SPT) and Cone Penetration Tests (CPT). Liquefaction potential may also be evaluated using shear wave velocity (V_s) testing and Becker Penetration Tests (BPT) for soils that are difficult to test using SPT and CPT methods, such as gravelly soils (see Andrus and Stokoe 2000); however, these methods are not preferred and are used less frequently than SPT or CPT methods. If the CPT method is used, SPT sampling and soil gradation testing shall still be conducted to obtain information on soil gradation parameters for liquefaction susceptibility assessment and to provide a comparison to CPT based analysis.

Simplified screening criteria to assess the potential liquefaction susceptibility of sands and silts based on soil gradation and plasticity indices should be used. In general, gravelly sands through low plasticity silts should be considered potentially liquefiable, provided they are saturated and very loose to medium dense.

If a more refined analysis of liquefaction potential is needed, laboratory cyclic triaxial shear or cyclic simple shear testing may be used to evaluate liquefaction susceptibility and initiation in lieu of empirical soil gradation/PI/density criteria, in accordance with Section 6-4.2.6.

Preliminary Screening – A detailed evaluation of liquefaction potential is required if all of the following conditions occur at a site, and the site Seismic Design Category is classified as SDC C or D:

- The estimated maximum groundwater elevation at the site is determined to be within 50 feet of the existing ground surface or proposed finished grade, whichever is lower.
- The subsurface profile is characterized in the upper 75 feet as having low plasticity silts, sand, or gravelly sand with a measured SPT resistance, corrected for overburden depth and hammer energy ($N1_{60}$), of 25 blows/ft or less, or a cone tip resistance q_{ciN} of 150 or less, or a geologic unit is present at the site that has been observed to liquefy in past earthquakes. For low plasticity silts and clays, the soil is considered liquefiable as defined by the Bray and Sancio (2006) or Boulanger and Idriss (2006) criteria.

For loose to very loose sand sites [e.g., $(N1_{)60}$, < 10 bpf or q_{c1N}, < 75], a potential exists for liquefaction in SDC B, if the acceleration coefficient, A_s (i.e., PGA × F_{pga}), is 0.15 or higher. The potential for and consequences of liquefaction for these sites will depend on the dominant magnitude for the seismic hazard and just how loose the soil is. As the magnitude decreases, the liquefaction resistance of the soil increases due to the limited number of earthquake loading cycles. Generally, if the magnitude is 6 or less, the potential for liquefaction, even in these very loose soils, is either very low or the extent of liquefaction is very limited. Nevertheless, a liquefaction assessment should be made if loose to very loose sands are present to a sufficient extent to impact bridge stability and A_s is greater than or equal to 0.15. These loose to very loose sands are likely to be present in hydraulically placed fills and alluvial or estuarine deposits near rivers and waterfronts. See Idriss and Boulanger (2008) for additional information that relates liquefaction susceptibility to the depositional environment and geologic age of the deposit.

If the site meets the conditions described above, a detailed assessment of liquefaction potential shall be conducted. If all conditions are met except that the water table depth is greater than 50 feet but less than 75 feet, a liquefaction evaluation should still be considered, and if deep foundations are used, the foundation tips shall be located below the bottom of the liquefiable soil, or adequately above the liquefiable zone such that the impact of the liquefaction does not cause bridge or wall collapse.

Liquefaction Susceptibility of Silts – Liquefaction susceptibility of silts should be evaluated using the criteria developed by Bray and Sancio (2006) or Boulanger and Idriss (2006) if laboratory cyclic triaxial or cyclic simple shear tests are not conducted. The Modified Chinese Criteria (Finn, et al., 1994) that has been in use in the past has been found to be unconservative based on laboratory and field observations (Boulanger and Idriss, 2006). Therefore, the new criteria proposed by Bray and Sancio or Boulanger and Idriss are recommended. According to the Bray and Sancio criteria, fine-grained soils are considered susceptible to liquefaction if:

- The soil has a water content(w_c) to liquid limit (LL) ratio of 0.85 or more; and
- The soil has a plasticity index (PI) of less than 12.

For fine grained soils that are outside of these ranges of plasticity, cyclic softening resulting from seismic shaking may need to be considered. According to the Boulanger and Idriss (2006) criterion, fine grained soils are considered susceptible to liquefaction if the soil has a PI of less than 7. Since there is a significant difference in the screening criteria for liquefaction of silts in the current literature, for soils that are marginally

susceptible or not susceptible to liquefaction, cyclic triaxial or simple shear laboratory testing of undisturbed samples is recommended to assess whether or not the silt is susceptible to liquefaction, rather than relying solely on the screening criteria.

Liquefaction Susceptibility of Gravels – Other than through correlation to shear wave velocity as described in Andrus and Stokoe (2000), no specific guidance regarding susceptibility of gravels to liquefaction is currently available. The primary reason why gravels may not liquefy is that their high permeability frequently precludes the development of undrained conditions during and after earthquake loading. When bounded by lower permeability layers, however, gravels should be considered susceptible to liquefaction and their liquefaction potential evaluated. A gravel that contains sufficient sand to reduce its permeability to a level near that of the sand, even if not bounded by lower permeability layers, should also be considered susceptible to liquefaction and its liquefaction potential evaluated as such. Becker hammer testing and sampling, or sonic coring, could be useful for obtaining a representative sample of the sandy gravel that can be used to get an accurate soil gradation for assessing liquefaction potential. Downhole suspension logging (suspension logging in a mud rotary hole, not cased boring) should also be considered in such soils, as high quality V_s testing can overcome the variation in SPT test results caused by the presence of gravels.

6-4.2.2 *Determination of Whether or Not a Soil will Liquefy*

The most common method of assessing liquefaction involves the use of empirical methods (i.e., Simplified Procedures). These methods provide an estimate of liquefaction potential based on SPT blowcounts, CPT cone tip resistance, BPT blowcounts, or shear wave velocity. This type of analysis shall be conducted as a baseline evaluation, even when more rigorous methods are used. More rigorous, nonlinear, dynamic, effective stress computer models may be used for site conditions or situations that are not modeled well by the simplified methods, subject to the approval of the State Geotechnical Engineer. For situations where simplified (empirical) procedures are not allowed (e.g., to assess liquefaction at depths greater than 50 to 80 ft as described in Section 6-1.2.3), these more rigorous computer models should be used, and independent peer review, as described in Section 6-3, of the results from these more rigorous computer models shall be conducted.

Simplified Procedures – Procedures that should be used for evaluating liquefaction susceptibility using SPT, CPT, Vs, and BPT criteria are provided in Youd et al. (2001). Youd et al. summarize the consensus of the profession up to year 2000 regarding the use of the simplified (i.e., empirical) methods. Since the publication of this consensus paper, various other modifications to the consensus approach have been introduced, including those by Cetin et al. (2004), Moss et al. (2006), Boulanger and Idriss (2006, 2014), and Idriss and Boulanger (2008). These more recent modifications to these methods account for additions to the database on liquefaction, as well as refinements in the interpretation of case history data. The updated methods potentially offer improved estimates of liquefaction potential, and should be considered for use. National Academies of Sciences, Engineering, and Medicine (2016) provides the most recent consensus report on liquefaction and should be consulted to obtain the most up to date consensus guidance on this subject.

The simplified procedures are based on comparing the cyclic resistance ratio (CRR) of a soil layer (i.e., the cyclic shear stress required to cause liquefaction) to the earthquake induced cyclic shear stress ratio (CSR). The CRR is a function of the soil relative density as represented by an index property measure (e.g., SPT blowcount), the fines content of the soil taken into account through the soil index property used, the in-situ vertical effective stress as represented by a factor K_σ, an earthquake magnitude scaling factor, and possibly other factors related to the geologic history of the soil. The soil index properties are used to estimate liquefaction resistance based on empirical charts relating the resistance available to specific index properties (i.e., SPT, CPT, BPT or shear wave velocity values) and corrected to an equivalent magnitude of 7.5 using a magnitude scaling factor. The earthquake magnitude is used to empirically account for the duration of shaking or number of cycles.

The basic form of the simplified procedures used to calculate the earthquake induced CSR for the Simplified Method is as shown in Equation 6-8:

$$CSR = 0.65 \frac{A_{max}}{g} \frac{\sigma_o}{\sigma_o'} \frac{r_d}{MSF} \quad (6\text{-}8)$$

where,

A_{max} = peak ground acceleration accounting for site amplification effects
g = acceleration due to gravity
σ_o = initial total vertical stress at depth being evaluated
σ_o' = initial effective vertical stress at depth being evaluated
r_d = stress reduction coefficient
MSF = magnitude scaling factor

Note that A_{max} is the PGA times the acceleration due to gravity, since the PGA is actually an acceleration coefficient, and A_{max}/g is equal to A_s.

The factor of safety against liquefaction is defined by Equation 6-9:

$$FS_{liq} = CRR/CSR \quad (6\text{-}9)$$

The SPT procedure has been most widely used and has the advantage of providing soil samples for gradation and Atterberg limits testing. The CPT provides the most detailed soil stratigraphy, is less expensive, can provide shear wave velocity measurements, and is more reproducible. If the CPT is used, soil samples shall be obtained using the SPT or other methods so that detailed gradational and plasticity analyses can be conducted. The use of both SPT and CPT procedures can provide a detailed liquefaction assessment for a site.

Where SPT data is used, sampling and testing shall be conducted in accordance with Chapter 3. In addition:

- Correction factors for borehole diameter, rod length, hammer type, and sampler liners shall be used, where appropriate.
- Where gravels or cobbles are present, the use of short interval adjusted SPT N values may be effective for estimating the N values for the portions of the sample not affected by gravels or cobbles.

- Blowcounts obtained when sampling using Dames and Moore or modified California samplers or non-standard hammer weights and drop heights, including wireline and downhole hammers, shall not be used for liquefaction evaluations.

As discussed in Section 6-1.2.2, the limitations of the simplified procedures should be recognized. The simplified procedures were developed from empirical evaluations of field observations. Most of the case history data was collected from level to gently sloping terrain underlain by Holocene-age alluvial or fluvial sediment at depths less than 50 feet. Therefore, the simplified procedures are most directly applicable to these site conditions. Caution should be used for evaluating liquefaction potential at depths greater than 50 feet using the simplified procedures. In addition, the simplified procedures estimate the earthquake induced cyclic shear stress ratio based on a coefficient, r_d, that is highly variable at depth as discussed in Section 6-1.2.2.

As an alternative to the use of the r_d factor, to improve the assessment of liquefaction potential, especially at greater depths, if soft or loose soils are present, equivalent linear or nonlinear site specific, one dimensional ground response analyses may be conducted to determine the maximum earthquake induced shear stresses at depth in the Simplified Method. For example, the linear total stress computer programs ProShake (EduPro Civil Systems, 1999), Shake2000 (Ordoñez, 2000), or DEEPSOIL (Hashash, et al., 2016) may be used for this purpose. Consideration should be given to the consistency of site specific analyses with the procedures used to develop the liquefaction resistance curves. A minimum of seven time histories (see Section 6-3.2.2 and Appendix 6-A) should be used to conduct these analyses to obtain a reasonably stable mean r_d value as a function of depth.

Nonlinear Effective Stress Methods – An alternative to the simplified procedures for evaluating liquefaction susceptibility is to complete a nonlinear, effective stress site response analysis utilizing a computer code capable of modeling pore water pressure generation and dissipation. This is a more rigorous analysis that requires additional parameters to describe the stress-strain behavior and pore pressure generation characteristics of the soil.

The advantages with this method of analysis include the ability to assess liquefaction potential at all depths, including those greater than 50 feet, and the effects of liquefaction and large shear strains on the ground motion. In addition, pore-water redistribution during and following shaking can be modeled, seismically induced deformation can be estimated, and the timing of liquefaction and its effects on ground motion at and below the ground surface can be assessed.

Several one-dimensional non-linear, effective stress analysis programs are available for estimating liquefaction susceptibility at depth, and these methods are being used more frequently by geotechnical designers. However, a great deal of caution needs to be exercised with these programs, as there has been little verification of the ability of these programs to predict liquefaction at depths greater than 50 feet. This limitation is partly the result of the very few well documented sites with pore-water pressure measurements during liquefaction, either at shallow or deep depths, and partly the result of the one-dimensional approximation. For this reason greater reliance must be placed on observed response from laboratory testing or centrifuge modeling when developing the soil and pore pressure models used in the effective stress analysis method. The success of the effective stress model is, therefore, tied in part to the ability of the laboratory or centrifuge modeling to replicate field conditions.

A key issue that can affect the results obtained from nonlinear effective stress analyses is whether or not, or how well, the pore pressure model used addresses soil dilation during shearing. Even if good pore pressure data from laboratory liquefaction testing is available, the models used in some effective stress analysis methods may not be sufficient to adequately model dilation during shearing of liquefied soils. This limitation may result in unconservative predictions of ground response when a deep layer liquefies early during ground shaking. The inability to transfer energy through the liquefied layer could result in "shielding" of upper layers from strong ground shaking, potentially leading to an unconservative site response (see Anderson, et al. 2011 for additional explanation and guidance regarding effective stress modeling). See Appendix 6-A for additional considerations regarding modeling accuracies.

Two-dimensional effective stress analysis models can overcome some of these deficiencies, provided that a good soil and pore pressure model is used (e.g., the UBC sand model) – see Appendix 6-A. However, they are even more complex to use and certainly not for novice designers.

It should also be recognized that the results of nonlinear effective stress analyses can be quite sensitive to soil parameters that are often not as well established as those used in equivalent linear analyses. Therefore, it is incumbent upon the user to calibrate the model, evaluate the sensitivity of its results to any uncertain parameters or modeling assumptions, and consider that sensitivity in the interpretation of the results. Therefore, the geotechnical designer shall provide documentation that their model has been validated and calibrated with field data, centrifuge data, and/or extensive sensitivity analyses.

Analysis results from nonlinear effective stress analyses shall not be considered sufficient justification to conclude that the upper 40 to 50 feet of soil will not liquefy as a result of the ground motion dampening effect (i.e., shielding, or loss of energy) caused by deeper liquefiable layers. However, the empirical liquefaction analyses identified in this section may be used to justify that soil layers and lenses within the upper 65 feet of soil will not liquefy. This soil/pore pressure model deficiency for nonlinear effective stress methodologies could be crudely and conservatively addressed by selectively modifying soil parameters and/or turning off the pore pressure generation in given layers to bracket the response.

Due to the highly specialized nature of these more sophisticated liquefaction assessment approaches, approval by the State Geotechnical Engineer is required to use nonlinear effective stress methods for liquefaction evaluation, and independent peer review as described in Section 6-3 shall be conducted.

6-4.2.3 *Minimum Factor of Safety Against Liquefaction*

Liquefaction hazards assessment and the development of hazard mitigation measures shall be conducted if the factor of safety against liquefaction (Equation 6-9) is less than 1.2 or if the soil is determined to be liquefiable for the return period of interest (e.g., 975 years) using the performance based approach as described by Kramer and Mayfield (2007) and Kramer (2007). Note that for silts and low plasticity clays, a factor of safety is not calculated – the basis for determining whether or not liquefaction will occur is through cyclic simple shear or cyclic triaxial testing, or just whether or not the liquefaction susceptibility criteria are met. The hazard level used for this analysis shall be consistent

with the hazard level selected for the structure for which the liquefaction analysis is being conducted (typically, a probability of exceedance of 7 percent in 75 years in accordance with the AASHTO *Guide Specifications for LRFD Seismic Bridge Design*). While performance based techniques can be accomplished using the WSLIQ software (Kramer, 2007), the performance based option (as well as the multi-hazard option) in that software uses the 2002 USGS ground motions and has not been updated to include more recent ground motion data that would be consistent with the ground motions used to produce the 2014 USGS seismic maps. Until that software is updated to use the new ground motion database, the multi-hazard and performance based options in WSLIQ shall not be used. Liquefaction hazards to be assessed include settlement and related effects, and liquefaction induced instability (e.g., flow failure or lateral spreading), and the effects of liquefaction on foundations.

6-4.2.4 *Liquefaction Induced Settlement*

Both dry and saturated deposits of loose granular soils tend to densify and settle during and/or following earthquake shaking. Settlement of unsaturated granular deposits is discussed in Section 6-4.4. Settlement of saturated granular deposits due to liquefaction shall be estimated using techniques based on the Simplified Procedure, or if nonlinear effective stress models are used to assess liquefaction in accordance with Section 6-4.4.2, such methods may also be used to estimate liquefaction settlement.

If the Simplified Procedure is used to evaluate liquefaction potential, liquefaction induced ground settlement of saturated granular deposits should be estimated using the procedures by Tokimatsu and Seed (1987) or Ishihara and Yoshimine (1992). The Tokimatsu and Seed (1987) procedure estimates the volumetric strain as a function of earthquake induced CSR and corrected SPT blowcounts. The Ishihara and Yoshimine (1992) procedure estimates the volumetric strain as a function of factor of safety against liquefaction, relative density, and corrected SPT blowcounts or normalized CPT tip resistance. Updated procedures for estimating liquefaction settlement using CPT data are also provided in Zhang, et al. (2002). Example charts used to estimate liquefaction induced settlement using the Tokimatsu and Seed procedure and the Ishihara and Yoshimine procedure are presented as Figures 6-8 and 6-9, respectively.

If a more refined analysis of liquefaction induced settlement is needed, laboratory cyclic triaxial shear or cyclic simple shear testing may be used to evaluate the liquefaction induced vertical settlement in lieu of empirical SPT or CPT based criteria, in accordance with Section 6-4.2.6.

The empirically based analyses should be conducted as a baseline evaluation, even when laboratory volumetric strain test results are obtained and used for design, to qualitatively check the reasonableness of the laboratory test results.

Figure 6-8 Liquefaction Induced Settlement Estimated Using the Tokimatsu and Seed procedure (Tokimatsu and Seed, 1987)

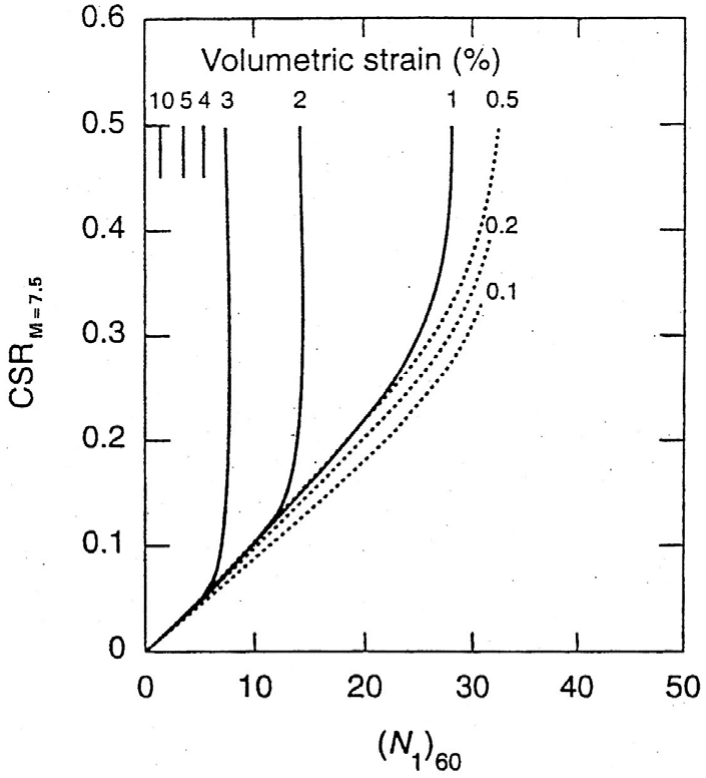

Figure 6-9 Liquefaction Induced Settlement Estimated Using the Ishihara and Yoshimine procedure (Ishihara and Yoshimine, 1992)

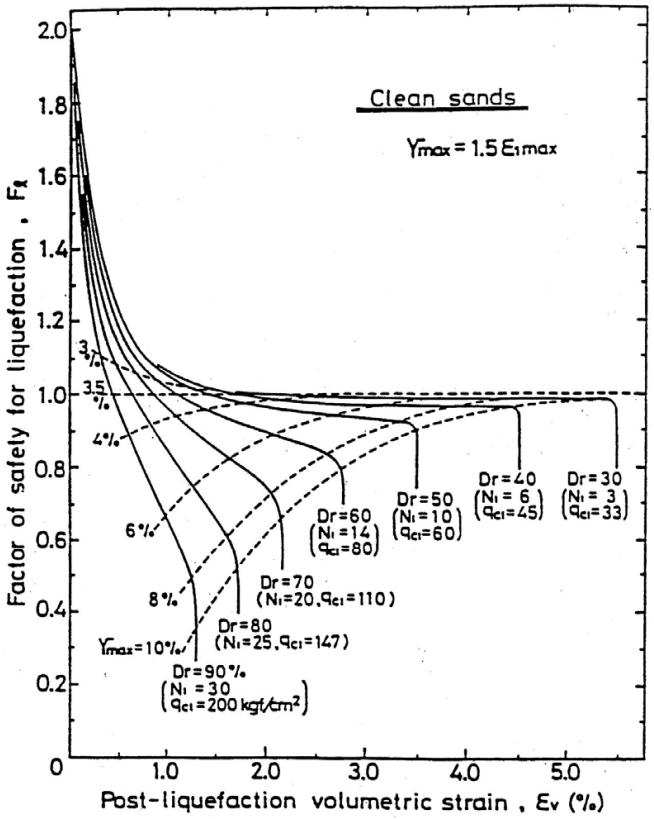

6-4.2.5 *Residual Strength Parameters*

Liquefaction induced instability is strongly influenced by the residual strength of the liquefied soil. Instability occurs when the shear stresses required to maintain equilibrium exceed the residual strength of the soil deposit. Evaluation of residual strength of a liquefied soil deposit is one of the most difficult problems in geotechnical practice (Kramer, 1996). A variety of empirical methods are available to estimate the residual strength of liquefied soils. The empirical relationships provided in Figures 6-1 through 6-3 and Table 6-3 shall be used to estimate residual strength of liquefied soil unless soil specific laboratory performance tests are conducted as described below. These procedures for estimating the residual strength of a liquefied soil deposit are based on an empirical relationship between residual undrained shear strength and equivalent clean sand SPT blowcounts or CPT q_{c1n} values, using the results of back- calculation of the apparent shear strengths from case histories of large displacement flow slides. The significant level of uncertainty in these estimates of residual strength should be taken into account in design and evaluation of calculation results. See Section 6-2.2 for additional requirements regarding this issue.

If a more refined analysis of residual strength is needed, laboratory cyclic triaxial shear or cyclic simple shear testing may be used to evaluate the residual strength in lieu of empirical SPT or CPT based criteria, in accordance with Section 6-4.2.6.

The empirically based analyses should be conducted as a baseline evaluation, even when laboratory residual shear strength test results are obtained and used for design, to qualitatively check the reasonableness of the laboratory test results. The final residual shear strength value selected should also consider the shear strain level in the soil that can be tolerated by the structure or slope impacted by the reduced shear strength in the soil (i.e., how much lateral deformation can the structure tolerate?). Numerical modeling techniques may be used to determine the soil shear strain level that results in the maximum tolerable lateral deformation of the structure being designed.

6-4.2.6 *Assessment of Liquefaction Potential and Effects Using Laboratory Test Data*

If a more refined analysis of liquefaction potential, liquefaction induced settlement, or residual strength of liquefied soil is needed, laboratory cyclic simple shear or cyclic triaxial shear testing may be used in lieu of empirical soil gradation/PI/density (i.e., SPT or CPT based) criteria, if high quality undisturbed samples can be obtained. Laboratory cyclic simple shear or cyclic triaxial shear testing may also be used to evaluate liquefaction susceptibility of and effects on sandy soils from reconstituted soil samples. However, due to the difficulties in creating soil test specimens that are representative of the actual in-situ soil, liquefaction testing of reconstituted soil may be conducted only if approved by the State Geotechnical Engineer. Requests to test reconstituted soil specimens will be evaluated based on how well the proposed specimen preparation procedure mimics the in-situ soil conditions and geologic history.

The number of cycles, and either the cyclic stress ratios (stress-controlled testing) or cyclic shear strain (strain-controlled testing) used during the cyclic testing to liquefy or to attempt to liquefy the soil, should cover the range of the number of cycles and cyclic loading anticipated for the earthquake/ground motion being modeled. Testing to more than one stress or strain ratio should be done to fully capture the range of stress or

strain ratios that could occur. Preliminary calculations or computer analyses to estimate the likely cyclic stresses and/or strains anticipated should be conducted to help provide a basis for selection of the cyclic loading levels to be used for the testing. The vertical confining stress should be consistent with the in-situ vertical effective stress estimated at the location where the soil sample was obtained. Therefore K_o-consolidation is required in triaxial tests.

Defining liquefaction in these laboratory tests can be somewhat problematic. Theoretically, initial liquefaction is defined as being achieved once the excess pore pressure ratio in the specimen, r_u, is at 100 percent. The assessment of whether or not this has been achieved in the laboratory tested specimen depends on how the pore pressure is measured in the specimen, and the type of soil contained in the specimen. As the soil gets siltier, the possibility that the soil will exhibit fully liquefied behavior (i.e., initial liquefaction) at a measured pore pressure in the specimen of significantly less than 100 percent increases. A more practical approach that should be used in this case is to use a strain based definition to identify the occurrence of enough cyclic softening to consider the soil to have reached a failure state caused by liquefaction. Typically, if the soil reaches shear strains during cyclic loading of 3 percent or more, the soil, for practical purposes, may be considered to have achieved a state equivalent to initial liquefaction.

Note that if the testing is carried out well beyond initial liquefaction, cyclic triaxial testing is not recommended. In that case, necking of the specimen can occur, making the cyclic triaxial test results not representative of field conditions.

For the purpose of estimating liquefaction induced settlement, after the cyclic shearing is completed, with the vertical stress left on the specimen, the vertical strain is measured as the excess pore pressure is allowed to dissipate.

Note that once initial liquefaction has been achieved, volumetric strains are not just affected by the excess pore pressure generated through cyclic loading, but are also affected by damage to the soil skeleton as cyclic loading continues. Therefore, to obtain a more accurate estimate of post liquefaction settlement, the specimen should be cyclically loaded to the degree anticipated in the field, which may mean continuing cyclic loading after initial liquefaction is achieved.

If the test results are to be used with simplified ground motion modeling techniques (e.g., specification based ground response analysis or total stress site specific ground motion analysis), volumetric strain should be measured only for fully liquefied conditions. If effective stress ground motion analysis (e.g., DEEPSOIL) is conducted, volumetric strain measurements should be conducted at the cyclic stress ratio and number of loading cycles predicted by the effective stress analysis for the earthquake being modeled at the location in the soil profile being modeled, whether or not that combination results in a fully liquefied state. Vertical settlement prediction should be made by using the laboratory test data to develop a relationship between the measured volumetric strain and either the shear strain in the lab test specimens or the excess pore pressure measured in the specimens, and correlating the predicted shear strain or excess pore pressure profile predicted from the effective stress analysis to the laboratory test results to estimate settlement from volumetric strain; however, the shear strain approach is preferred.

To obtain the liquefied residual strength, after the cyclic shearing is completed, the drain lines in the test should be left closed, and the sample sheared statically. If the test results are to be used with simplified ground motion modeling techniques (e.g., specification

based ground response analysis or total stress site specific ground motion analysis), residual strength should be measured only for fully liquefied conditions. If effective stress ground motion analysis (e.g., DEEPSOIL) is conducted, residual shear strength testing should be conducted at the cyclic stress ratio and number of loading cycles predicted by the effective stress analysis for the earthquake being modeled at the location in the soil profile being modeled, whether or not that combination results in a fully liquefied state.

See Kramer (1996), Seed. et al. (2003), and Idriss and Boulanger (2008) for additional details and cautions regarding laboratory evaluation of liquefaction potential and its effects.

6-4.2.7 *Combining Seismic Inertial Loading with Analyses Using Liquefied Soil Strength*

The number of loading cycles required to initiate liquefaction, and hence the time at which liquefaction is triggered, tends to vary with the relative density and composition of the soil (i.e., denser soils require more cycles of loading to cause initial liquefaction). Whether or not the geologic hazards that result from liquefaction (e.g., lateral soil displacement such as flow failure and lateral spreading, reduced soil stiffness and strength, and settlement/downdrag) are concurrent with the strongest portion of the design earthquake ground motion depends on the duration of the motion and the resistance of the soil to liquefaction. For short duration ground motions and/ or relatively dense soils, liquefaction may be triggered near the end of shaking. In this case, the structure of interest is unlikely to be subjected to high inertial forces after the soil has reached a liquefied state, and the evaluation of the peak inertial demands on the structure can be essentially decoupled from evaluation of the deformation demands associated with soil liquefaction. However, for long-duration motions (which are usually associated with large magnitude earthquakes such as a subduction zone earthquake as described in GDM Appendix 6-A) and/or very loose soils, liquefaction may be triggered earlier in the motion, and the structure may be subjected to strong shaking while the soil is in a liquefied state.

There is currently no consensus on how to specifically address this issue of timing of seismic acceleration and the development of initial liquefaction and its combined impact on the structure. More rigorous analyses, such as by using nonlinear, effective stress methods, are typically needed to analytically assess this timing issue. Nonlinear, effective stress methods can account for the build-up in pore-water pressure and the degradation of soil stiffness and strength in liquefiable layers. Use of these more rigorous approaches requires considerable skill in terms of selecting model parameters, particularly the pore pressure model. The complexity of the more rigorous approaches is such that approval by the State Geotechnical Engineer to use these approaches is mandatory, and an independent peer reviewer with expertise in nonlinear, effective stress modeling shall be used to review the specific methods used, the development of the input data, how the methods are applied, and the resulting impacts.

While flow failure due to liquefaction is not really affected by inertial forces acting on the soil mass (see Section 6-4.3.1), it is possible that lateral forces on a structure and its foundations due to flow failure may be concurrent with the structure inertial forces if the earthquake duration is long enough (e.g., a subduction zone earthquake). Likewise, for lateral spreading, since seismic inertial forces are acting on the soil during the development of lateral spreading (see Section 6-4.3.1), logically, inertial forces may also

be acting on the structure itself concurrently with the development of lateral forces on the structure foundation.

However, there are several factors that may affect the magnitude of the structural inertial loads, if any, acting on the foundation. Brandenberg, et al. (2007a and b) provide examples from centrifuge modeling regarding the combined effect of lateral spreading and seismic structural inertial forces on foundation loads and some considerations for assessing these inertial forces. They found that the total load on the foundation was approximately 40 percent higher on average than the loads caused by the lateral spreading alone. However, the structural column used in this testing did not develop any plastic hinging, which, had it occurred could have resulted in structural inertial loads transmitted to the foundation that could have been as low as one-fourth of what was measured in this testing. Another factor that could affect the potential combination of lateral spreading and structural inertia loads is how close the foundation is to the initiation point (i.e., downslope end) for the lateral spreading, as it takes time for the lateral spread to propagate upslope and develop to its full extent.

The current AASHTO Guide Specifications for seismic design do allow the lateral spreading forces to be decoupled from bridge seismic inertial forces. However, the potential for some combined effect of lateral spread forces with structural inertial loads should be considered if the structure is likely to be subjected to strong shaking while the soil is in a liquefied state, especially if the foundation is located near the toe of the lateral spread or flow failure. In lieu of more sophisticated analyses such as dynamic- stress deformation analyses, for sites where more than 20 percent of the hazard contributing to the peak ground acceleration is from an earthquake with a magnitude of 7.5 or more (i.e., a long duration earthquake where there is potential for strong motion to occur after liquefaction induced lateral ground movement has initiated), it should be assumed that the lateral spreading/flow failure forces on the foundations are combined with 25 percent of the structure inertial forces, or the plastic hinge force, whichever is less.

This timing issue also affects liquefaction-induced settlement and downdrag, in that settlement and downdrag do not generally occur until the pore pressures induced by ground shaking begin to dissipate after shaking ceases. Therefore, a de-coupled analysis is appropriate when considering liquefaction downdrag loads.

When considering the effect of liquefaction on the resistance of the soil to structure foundation loads both in the axial (vertical) and lateral (horizontal) directions, two analyses should be conducted to address the timing issue. For sites where liquefaction occurs around structure foundations, structures should be analyzed and designed in two configurations as follows:

- **Nonliquefied Configuration** – The structure should be analyzed and designed, assuming no liquefaction occurs using the ground response spectrum appropriate for the site soil conditions in a nonliquefied state, i.e., using P-Y curves derived from static soil properties.
- **Liquefied Configuration** – The structure as designed in nonliquefied configuration above should be reanalyzed assuming that the layer has liquefied and the liquefied soil provides the appropriate residual resistance for lateral and axial deep foundation response analyses consistent with liquefied soil conditions (i.e., modified P-Y curves, modulus of subgrade reaction, T-Z curves, axial soil frictional resistance). The design spectrum should be the same as that used in nonliquefied configuration. However,

this analysis does not include the lateral forces applied to the structure due to liquefaction induced lateral spreading or flow failure, except as noted earlier in this section with regard to large magnitude, long duration earthquakes.

With the approval of the State Bridge and State Geotechnical Engineers, a site-specific response spectrum (for site specific spectral analysis) or nonlinear time histories developed near the ground surface (for nonlinear structural analysis) that account for the modifications in spectral content from the liquefying soil may be developed. The modified response spectrum, and associated time histories, resulting from the site-specific analyses at the ground surface shall not be less than two-thirds of the spectrum (i.e., as applied to the spectral ordinates within the entire spectrum) developed using the general procedure described in the AASHTO Guide Specifications for LRFD Bridge Seismic Design, Article 3.4.1, modified by the site coefficients in Section 6-3.2 of this chapter. If the soil and bedrock conditions are classified as Site Class F, however, there is no AASHTO general procedure spectrum. In that case, the reduced response spectrum, and associated time histories, that account for the effects of liquefaction shall not be less than two-thirds of the site specific response spectrum developed from an equivalent linear or nonlinear total stress analysis (i.e., nonliquefied conditions), or alternatively a Site Class E response spectrum could be used for this purpose instead of the equivalent total stress analysis.

Designing structures for these two configurations should produce conservative results. Typically, the nonliquefied configuration will control the loads applied to the structure and therefore is used to determine the loads within the structure, whereas the liquefied configuration will control the maximum deformations in the structure and is therefore used to design the structure for deformation. In some cases, this approach may be more conservative than necessary, and the designer may use a more refined analysis to assess the combined effect of strong shaking and liquefaction impacts, considering that both effects may not act simultaneously. However, Youd and Carter (2005) suggest that at periods greater than 1 second, it is possible for liquefaction to result in higher spectral accelerations than occur for equivalent nonliquefied cases, all other conditions being equal. Site-specific ground motion response evaluations may be needed to evaluate this potential.

6-4.3 Seismic Slope Instability and Deformation

Slope instability can occur during earthquakes due to inertial effects associated with ground accelerations or due to weakening of the soil induced by the seismic shear strain. Inertial slope instability is caused by temporary exceedance of the soil strength by dynamic earthquake stresses. In general, the soil strength remains unaffected by the earthquake shaking in this case. Weakening instability is the result of soil becoming progressively weaker as shaking occurs such that the shear strength becomes insufficient to maintain a stable slope.

Seismic slope instability analysis is conducted to assess the impact of instability and slope deformation on structures (e.g., bridges, tunnels, and walls, including reinforced slopes steeper than 1.2H:1V and noise walls). However, in accordance with Section 6-1.2, slopes that do not impact such structures are generally not mitigated for seismic slope instability.

The scope of this section is limited to the assessment of seismic slope instability. The impact of this slope instability on the seismic design of foundations and walls is addressed

in Sections 6-5.3 and 6-5.4 for foundations and Sections 15-4.10 through 15-4.12 for walls.

6-4.3.1 *Weakening Instability due to Seismic Loading*

Weakening instability occurs due to liquefaction or seismic shear strain induced weakening of sensitive fine grained soils. With regard to liquefaction induced weakening instability, earthquake ground motion induces stress and strain in the soil, resulting in pore pressure generation and liquefaction in saturated soil. As the soil strength decreases toward its liquefied residual value, two types of slope instability can occur: flow failure, and lateral spreading. These various types of weakening instability are described in the subsections that follow. How the impact of weakening instability due to liquefaction is addressed for design of structures is specified in Section 6-5.4.

Weakening Instability not Related to Liquefaction – This type of weakening instability depends on the sensitivity of the soil to the shear strain induced by the earthquake ground motion. Sensitive silts and clays fall into this category. For seismic stability design in this scenario, the stability shall be assessed with consideration to the lowest shear strength that is likely to occur during and after shaking. For example, glacially overconsolidated clays will exhibit a significant drop in strength to a residual value as deformation takes place (e.g., see Section 5-13.3). A seismic slope deformation analysis should be conducted to assess this potential. Since it is likely that most of the strong motion will have subsided by the time the deformation required to drop the soil to its residual strength has occurred, the seismic slope stability analysis typically does not need to include inertial forces due to seismic acceleration when seismic stability is evaluated using the residual shear strength of the sensitive silt or clay soil. However, if the deformation analysis shows that enough deformation to drop the soil shear strength to near its residual value can occur before strong motion ceases, then the slope stability analysis shall include seismic inertial forces in combination with the residual shear strength. For silts and clays with low to moderate sensitivity, a strength reduction of 10 to 15 percent to account for cyclic degradation is reasonable for earthquake magnitudes of 7.0 or more (Kavazanjian, et al. 2011). For clays with high sensitivity, cyclic shear strength tests should be conducted to assess the rate of strength reduction.

For this type of weakening instability, the minimum level of safety specified in Section 6-4.3.2 shall be met, considering the weakened state of the soil during and after shaking. Assessment of the impact of this type of instability on structures is addressed in Section 6-5.3 for foundations and Sections 15-4.10 through 15-4.12 for walls.

Liquefaction Induced Flow Failure – Liquefaction can lead to catastrophic flow failures driven by static shearing stresses that lead to large deformation or flow. Such failures are similar to debris flows and are characterized by sudden initiation, rapid failure, and the large distances over which the failed materials move (Kramer, 1996). Flow failures typically occur near the end of strong shaking or shortly after shaking. However, delayed flow failures caused by post-earthquake redistribution of pore water pressures can occur—particularly if liquefiable soils are capped by relatively impermeable layers.

The potential for liquefaction induced flow failures should be evaluated using conventional limit equilibrium slope stability analyses (see Section 6-4.3), using residual undrained shear strength parameters for the liquefied soil, and decoupling the analysis from all seismic inertial forces (i.e., performed with k_h and k_v equal to zero). If the limit

equilibrium factor of safety, FS, is less than 1.05, flow failure shall be considered likely. In these instances, the magnitude of deformation is usually too large to be acceptable for design of bridges or structures, and some form of mitigation will likely be needed. The exception is where the liquefied material and any overlying crust flow past the structure and the structure and its foundation system can resist the imposed loads. Where the factor of safety for this decoupled analysis is greater than 1.05 for liquefied conditions, deformation and stability shall be evaluated using a lateral spreading analysis (see the subsection "Lateral Spreading," especially regarding cautions in conducting these types of analyses).

Residual strength values to be used in the flow failure analysis may be determined from empirical relationships (See Section 6-4.2.5) or from laboratory test results. If laboratory test results are used to assess the residual strength of the soil that is predicted to liquefy and potentially cause a flow failure, the shearing resistance may be very strain dependent. As a default, the laboratory mobilized residual strength value used should be picked at a strain of 2 percent, assuming the residual strength value is determined from laboratory testing as described in Section 6-4.2.6. A higher strain value may be used for this purpose, subject to the approval of the State Geotechnical Engineer and State Bridge Engineer, if it is known that the affected structure can tolerate a relatively large lateral deformation without collapse. Alternatively, numerical modeling may be conducted to develop the relationship between soil shear strain and slope deformation, picking a mobilized residual strength value that corresponds to the maximum deformation that the affected structure can tolerate.

With regard to flow failure prediction, even though there is a possibility that seismic inertial forces may be concurrent with the liquefied conditions (i.e., in long duration earthquakes), it is the static stresses that drive the flow failure and the deformations that result from the failure. The dynamic stresses present have little impact on this type of slope failure. Therefore, slope stability analyses conducted to assess the potential for flow failure resulting from liquefaction, and to estimate the forces that are applied to the foundation due to the movement of the soil mass into the structure, should be conducted without seismic inertial forces (i.e., k_h and k_v acting on the soil mass are set equal to zero).

Lateral Spreading – In contrast to flow failures, lateral spreading can occur when the shear strength of the liquefied soil is incrementally exceeded by the inertial forces induced during an earthquake or when soil stiffness degrades sufficiently to produce substantial permanent strain in the soil. The result of lateral spreading is typically horizontal movement of non-liquefied soils located above liquefied soils, in addition to the liquefied soils themselves. Lateral spreading analysis is by definition a coupled analysis (i.e., directly considers the effect of seismic acceleration), in contrast to a flow failure analysis, which is a decoupled seismic stability analysis.

If the factor of safety for slope stability from the flow failure analysis, assuming residual strengths in all layers expected to experience liquefied conditions, is 1.05 or greater, a lateral spreading/deformation analysis shall be conducted. If the liquefied layer(s) are discontinuous, the slope factor of safety may be high enough that lateral spreading does not need to be considered. This analysis also does not need to be conducted if the depth below the natural ground surface to the upper boundary of the liquefied layers is greater than 50 ft.

The potential for liquefaction induced lateral spreading on gently sloping sites or where the site is located near a free face shall be evaluated using one or more of the following empirical relationships:

- Youd et al. (2002)
- Kramer and Baska (2007)
- Zhang et al. (2004)

These procedures use empirical relationships based on case histories of lateral spreading and/or laboratory cyclic shear test results. Input into these models include earthquake magnitude, source-to-site distance, site geometry/slope, cumulative thickness of saturated soil layers and their characteristics (e.g., SPT N values, average fines content, average grain size). These empirical procedures provide a useful approximation of the potential magnitude of deformation that is calibrated against lateral spreading deformations observed in actual earthquakes. It should be noted, however, that the dataset used to develop these lateral spreading correlations is very limited for the upper end of earthquake magnitude (e.g., Mw > 8). Therefore, the potential for error in the estimate is greater for these very large magnitude earethquakes. In addition to the cited references for each method, see Kramer (2007) for details on how to carry out these methods. Kramer (2007) provides recommendations on the use of these methods which should be followed.

More complex analyses such as the Newmark time history analysis and dynamic stress deformation models, such as provided in two-dimensional, nonlinear effective stress computer programs (e.g., PLAXIS and FLAC), may also be used to estimate lateral spreading deformations. However, these analysis procedures have not been calibrated to observed performance with regard to lateral movements caused by liquefaction, and there are many complexities with regard to development of input parameters and application of the method to realistic conditions.

The Newmark time history analysis procedure is described in Anderson, et al. (2008) and Kavezanjian, et al. (2011). If a Newmark time history analysis is conducted to obtain an estimate of lateral spreading displacement, the number of cycles to initiate liquefaction for the time histories selected for analysis needs to be considered when selecting a yield acceleration to apply to the various portions of the time history. Initially, the yield acceleration will be high, as the soil will not have liquefied (i.e., non- liquefied soil strength parameters should be used to determine the yield acceleration). As the soil excess pore pressure begins to build up with additional loading cycles, the yield acceleration will begin to decrease. Once initial liquefaction or cyclic softening occurs, the residual strength is then used to determine the yield acceleration. Note that if the yield acceleration applied to the entire acceleration time history is based on residual strength consistent with liquefied conditions, the estimated lateral deformation will likely be overly conservative. To address this issue, an effective stress ground motion analysis (e.g., DEEPSOIL) should be conducted to estimate the build up of pore pressure and the development of liquefaction as the earthquake shaking continues to obtain an improved estimate of the drop in soil shear strength and yield acceleration as a function of time.

Simplified charts based on Newmark-type analyses shall not be used for estimating deformation resulting from lateral spreading. These simplified Newmark type analyses have some empirical basis built in with regard to estimation of deformation. However, they are not directly applicable to lateral spreading, as they were not developed for soil that weakens during earthquake shaking, as is the case for soil liquefaction.

If the more rigorous approaches are used, the empirically based analyses shall still be conducted to provide a baseline of comparison, to qualitatively check the reasonableness of the estimates from the more rigorous procedures. The more rigorous approaches should be used to evaluate the effect of various input parameters on deformation. See Youd, et al. (2002), Kramer (1996, 2007), Seed, et al. (2003) and Dickenson, et al. (2002) for additional background on the assessment of slope deformations resulting from lateral spreading.

A related issue is how far away the free face must be before lateral spreading need not be considered. Lateral spreading has been observed up to about 1,000 ft from the free face in past earthquakes (Youd, et al., 2002). Available case history data also indicate that deformations at L/H ratios greater than 20, where L is the distance from the free face or channel and H is the height of the free face of channel slope, are typically reduced to less than 20 percent of the lateral deformation at the free face (Idriss and Boulanger, 2008). Detailed analysis of the Youd, et al. database indicates that only two of 97 cases had observable lateral spreading deformation at L/H ratios as large as 50 to 70. If lateral spreading calculations using these empirical procedures are conducted at distances greater than 1,000 ft from the free face or L/H ratios greater than 20, additional evaluation of lateral spreading deformation using more complex or rigorous approaches should also be conducted.

At locations close to the free face (e.g., L/H < 5), displacement mechanisms more closely related to localized instabilities such as slumping could become more dominant. This should be considered when estimating displacements close to the free face.

6-4.3.2 *Slope Instability Due to Inertial Effects*

Even if the soil does not weaken as earthquake shaking progresses, instability can still occur due to the additional inertial forces acting on the soil mass during shaking. Inertial slope instability is caused by temporary exceedance of the soil strength by dynamic earthquake stresses.

Pseudo-static slope stability analyses shall be used to evaluate the seismic stability of slopes and embankments. The pseudo-static analysis consists of conventional limit equilibrium static slope stability analysis as described in Chapter 7 completed with horizontal and vertical pseudo-static acceleration coefficients (k_h and k_v) that act upon the critical failure mass. Kramer (1996) provides a detailed summary of pseudo-static analysis procedures.

For earthquake induced slope instability, with or without soil strength loss resulting from deformation induced by earthquake shaking (e.g., weakening instability due to strength loss in clays), the target factor of safety for the pseudo-static slope stability analysis is 1.1. When bridge foundations or retaining walls are involved, the LRFD approach shall be used, in which case a resistance factor of 0.9 shall be used for slope stability. Note that available slope stability programs produce a single factor of safety, FS. The specified resistance factor of 0.9 for slope stability is essentially the inverse of the FS that should be targeted in the slope stability program, which in this case is 1.1, making 0.9 the maximum resistance factor to be obtained when conducting pseudo-static slope stability analyses. If liquefaction effects dominate the stability of the slope and its deformation response (i.e., flow failure or lateral spreading occur), the procedures provided in Section 6-4.3.1 shall be used.

Unless a more detailed deformation analysis is conducted, a default horizontal pseudo-static coefficient, k_h, of 0.5As and a vertical pseudo-static coefficient, kv, equal to zero shall be used when seismic (i.e., pseudo-static) stability of slopes is evaluated, not considering liquefaction. This value of k_h assumes that limited deformation of the slope during earthquake shaking is acceptable (i.e., 1 to 2 inches) and considers some wave scattering effects.

Due to the fact that the soil is treated as a rigid body in pseudo-static limit equilibrium analyses, and that the seismic inertial force is proportional to the square of the failure surface radius whereas the resistance is proportional to just the radius, the tendency is for the failure surface to move deeper and farther uphill relative to the static failure surface when seismic inertial loading is added. That is, the pseudo-static analysis assumes that the k_h value applies uniformly to the entire failure mass regardless of how big the failure mass becomes. Since the soil mass is far from rigid, this can be an overly conservative assumption, in that the average value of k_h for the failure mass will likely decrease relative to the input value of k_h used for the stability assessment due to wave scattering effects.

The default value of k_h should be increased to near 1.0 A_s if a structure within or at the toe of the potentially unstable slope cannot tolerate any deformation. If slope movement can be tolerated, a reduced value of k_h applied to the slope in the stability analysis may be used by accounting for both wave scattering (i.e., height) effects and deformation effects through a more detailed deformation based analysis. See Anderson, et al. (2008) and Kavezanjiam, et al. (2011) for the specific procedures to do this.

Deformation analyses should be employed where an estimate of the magnitude of seismically induced slope deformation is required, or to reduce k_h for pseudo-static slope stability analysis below the default value of 0.5As as described above. Acceptable methods of estimating the magnitude of seismically induced slope deformation are as provided in Anderson, et al. (2008) and Kavezanjian, et al. (2011), and include Newmark sliding block (time history) analysis as well as simplified procedures developed from Newmark analyses and numerical modeling. For global and sliding seismic stability analyses for walls, the procedures provided in the AASHTO *LRFD Bridge Design Specifications* should be used (specifically see Articles 11.6.5.2, 11.6.5.3, and Appendix A11).

6-4.4 Settlement of Dry Sand

Seismically induced settlement of unsaturated granular soils (dry sands) is well documented. Factors that affect the magnitude of settlement include the density and thickness of the soil deposit and the magnitude of seismic loading. The most common means of estimating the magnitude of dry sand settlement are through empirical relationships based on procedures similar to the Simplified Procedure for evaluating liquefaction susceptibility. The procedures provided by Tokimatsu and Seed (1987) for dry sand settlement should be used. The Tokimatsu and Seed approach estimates the volumetric strain as a function of cyclic shear strain and relative density or normalized SPT N values. The step by step procedure is provided in FHWA Geotechnical Engineering Circular No. 3 (Kavazanjian, et al., 2011).

Since settlement of dry sand will occur during earthquake shaking with downdrag forces likely to develop before the strongest shaking occurs, the axial forces caused by this phenomenon should be combined with the full spectral ground motion applied to the structure.

6-5 Input for Structural Design

6-5.1 Foundation Springs

Structural dynamic response analyses incorporate the foundation stiffness into the dynamic model of the structure to capture the effects of soil structure interaction. The foundation stiffness is typically represented as a system of equivalent springs using a foundation stiffness matrix. The typical foundation stiffness matrix incorporates a set of six primary springs to describe stiffness with respect to three translational and three rotational components of motion. Springs that describe the coupling of horizontal translation and rocking modes of deformation may also be used.

The primary parameters for calculating the individual spring stiffness values are the foundation type (shallow spread footings or deep foundations), foundation geometry, dynamic soil shear modulus, and Poisson's Ratio.

6-5.1.1 *Shallow Foundations*

For evaluating shallow foundation springs, the WSDOT Bridge and Structures Office requires values for the dynamic shear modulus, G, Poisson's ratio, and the unit weight of the foundation soils. The maximum, or low-strain, shear modulus G_0 can be estimated using index properties and the correlations presented in Table 6-2. Alternatively, the maximum shear modulus can be calculated using Equation 6-10 below, if the shear wave velocity is known:

$$G_0 = \frac{\gamma}{g}(V_s)^2 \qquad (6\text{-}10)$$

Where:

G_0 = low strain, maximum dynamic shear modulus
γ = soil unit weight
V_s = shear wave velocity
g = acceleration due to gravity

The maximum dynamic shear modulus is associated with small shear strains (typically less than 0.0001 percent). As the seismic ground motion level increases, the shear strain level increases, and dynamic shear modulus decreases. If the specification based general procedure described in Section 6-3 is used, the effective shear modulus, G, should be calculated in accordance with Table 4-7 in FEMA 356 (ASCE 2000), reproduced below as Table 6-7 for convenience. Note that $S_{XS}/2.5$ in the table is essentially equivalent to A_s (i.e., $PGA \times F_{pga}$). This table reflects the dependence of G on both the shear strain induced by the ground motion and on the soil type (i.e., G drops off more rapidly as shear strain increases for softer or looser soils).

This table must be used with some caution, particularly where abrupt variations in soil profile occur below the base of the foundation. If the soil conditions within two foundation widths (vertically) of the bottom of the foundation depart significantly from the average conditions identified for the specific site class, a more rigorous method may be required. The more rigorous method may involve conducting one- dimensional equivalent linear ground response analyses using a program such as SHAKE to estimate the average effective shear strains within the zone affecting foundation response.

Table 6-7 Effective Shear Modulus Ratio (G/G_0) (After ASCE 2000)

Site Class	Effective Peak Acceleration, SXS/2.5			
	SXS/2.5 = 0	SXS/2.5 = 0.1	SXS/2.5 = 0.4	SXS/2.5 = 0.8
A	1.00	1.00	1.00	1.00
B	1.00	1.00	0.95	0.90
C	1.00	0.95	0.75	0.60
D	1.00	0.90	0.50	0.10
E	1.00	0.60	0.05	*
F	*	*	*	*

Notes: Use straight-line interpolation for intermediate values of $S_{xs}/2.5$.

* Site-specific geotechnical investigation and dynamic site response analyses shall be performed.

Alternatively, site specific measurements of shear modulus may be obtained. Measured values of shear modulus may be obtained from laboratory tests, such as the cyclic triaxial, cyclic simple shear, or resonant column tests, or they may be obtained from in- situ field testing. If the specification based general procedure is used to estimate ground motion response, the laboratory or in-situ field test results may be used to calculate G_0. Then the table from FEMA 356 (ASCE, 2000) reproduced above can be used to determine G/G_0. However, caution should be exercised when using laboratory testing to obtain this parameter due to the strong dependency of this parameter on sample disturbance. Furthermore, the low-strain modulus developed from lab test should be adjusted for soil age if the footing is placed on native soil. The age adjustment can result in an increase in the lab modulus by a factor of 1.5 or more, depending on the quality of the laboratory sample and the age of the native soil deposit. The age adjustment is not required if engineered fill will be located within two foundation widths of the footing base. The preferred approach is to measure the shear wave velocity, V_s, through in-situ testing in the field, to obtain G_0.

If a detailed site specific ground response analysis is conducted, either Figures 6-1 and 6-2 may be used to estimate G in consideration of the shear strains predicted through the site specific analysis (the effective shear strain, equal to 65 percent of the peak shear strain, should be used for this analysis), or laboratory test results may be used to determine the relationship between G/G_0 and shear strain.

Poisson's Ratio, v, should be estimated based on soil type, relative density/consistency of the soils, and correlation charts such as those presented in Chapter 5 or in the textbook, *Foundation Analysis and Design* (Bowles, 1996). Poisson's Ratio may also be obtained from field measurements of p- and s-wave velocities.

Once G and v are determined, the foundation stiffness values should be calculated as shown in FEMA 356 (ASCE, 2000).

6-5.1.2 *Deep Foundations*

Lateral soil springs for deep foundations shall be determined in accordance with Chapter 8. However, if soil liquefaction is likely to occur, then the effect of liquefaction on both the shape and the magnitude of the P-Y curves provided in this section shall be followed.

Available models used to estimate P-Y curves for liquefied soil vary considerably, which may affect the accuracy of the predicted behavior during liquefaction. Typical approaches that have been used in the past to address the effect of liquefaction on P-Y curves include the following:

1. Use the soft clay P-Y model, using the undrained residual strength as the cohesive strength for development of the P-Y curve as suggested by Wang and Reese (1998);
2. Use the static sand P-Y curve model, but with the peak shear strength reduced by a p-multiplier as recommended by Brandenberg, et al. (2007b) and Boulanger, et al. (2003);
3. Assume that the liquefied soil provides no resistance to lateral movement; and
4. Liquefied sand model as developed by Rollins, et al. (2005a, 2005b), and as applied in deep foundation lateral load analysis computer programs such as LPile (Isenhower and Wang 2015).

These approaches are conceptually illustrated in Figure 6-10.

Weaver, et al. (2005) and Rollins, et al. (2005a) provided comparisons between the various methods for developing P-Y parameters for liquefied soil and the measured lateral load response of a full scale pile foundation in liquefied soil (i.e., liquefied using blast loading). They concluded that none of the simplified methods that utilize adjusted soil parameters applied to static P-Y clay or sand models (i.e., approaches 1 and 2 identified above) accurately predicted the measured lateral pile response to load due to the difference in curve shape for static versus liquefied conditions (i.e., convex, or strain softening P-Y curves that will result from approaches 1 and 2, versus concave, or strain hardening, shape that will result from approach 4, respectively). Since the strain softening model is rather steeply increasing as a function of displacement at lower stress levels, the use of that model could be unconservative for moderate earthquakes in that there is not enough load to get past the steeper portion of the P-Y curve. They also found that the third approach (i.e., assume the liquefied soil has no shear strength), was overly conservative. The concave, or strain hardening, shape most accurately modeled the observed behavior of the piles tested in liquefied conditions (Weaver, et al. 2005; Rollins, et al. 2005a).

Rollins, et al. (2005) also concluded that group reduction factors for lateral pile resistance can be neglected in fully liquefied sand (i.e., $R_u > 0.9$), and that group reduction effects reestablish quickly as pore pressures dissipate. Furthermore, they observed that group reduction factors were applicable in soil that is not fully liquefied.

Therefore, the expressions developed by Rollins, et al. (2005a, 2005b) and contained within LPile (Isenhower and Wang 2015) should be used to develop liquefied soil P-Y curves.

Figure 6-10 Conceptual P-Y Curve Models For Liquefied Conditions

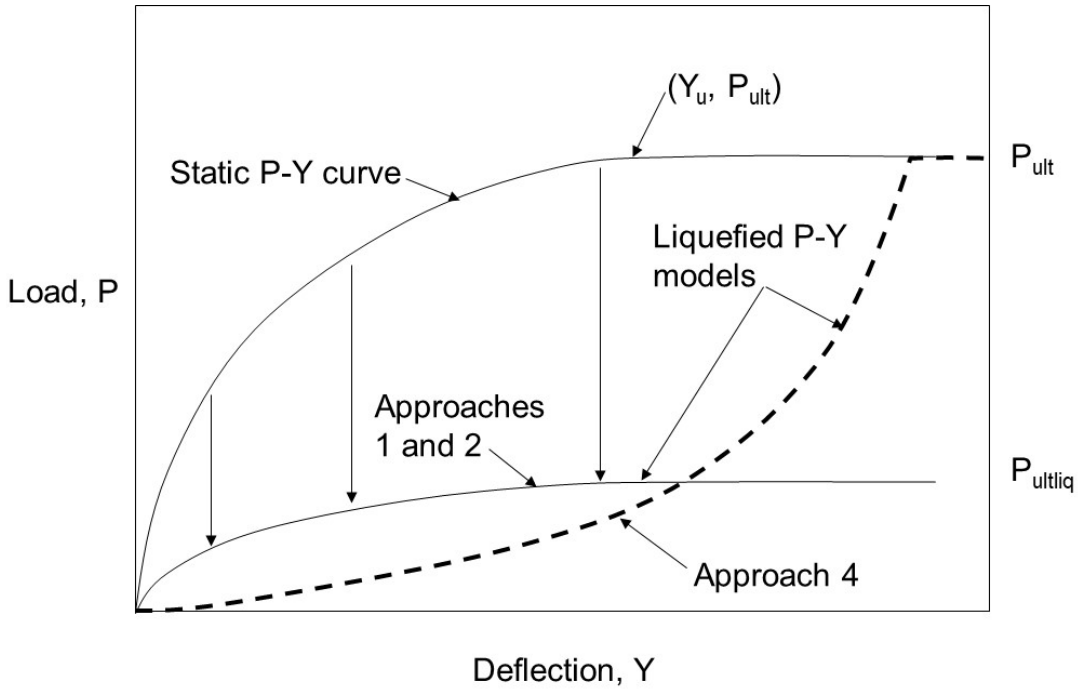

In general, if the liquefied P-Y curves result in foundation lateral deformations that are less than approximately 2 inches near the foundation top for the liquefied state, the liquefied P-Y curves should be further evaluated to make sure the parameters selected to create the liquefied P-Y curves represent realistic behavior in liquefied soil.

For pile or shaft groups, for fully liquefied conditions, P-Y curve reduction factors to account for foundation element spacing and location within the group may be set at 1.0. For partially liquefied conditions, the group reduction factors shall be consistent with the group reduction factors used for static loading.

6-5.2 Earthquake Induced Earth Pressures on Retaining Structures

The procedures specified in the AASHTO *LRFD Bridge Design Specifications* shall be used to determine earth pressures acting on retaining walls during a seismic event. Due to the high rate of loading that occurs during seismic loading, the use of undrained strength parameters in the slope stability analysis may be considered for soils other than clean coarse grained sands and gravels and sensitive silts and clays that could weaken during shaking.

6-5.3 Earthquake Induced Slope Failure Loads on Structures

If the pseudo-static slope stability analysis conducted in accordance with Section 6-4.3.2 results in a safety factor of less than 1.1 (or a resistance factor that is greater than 0.9 for LRFD), the slope shall be stabilized or the structure shall be designed to resist the slide force. For earthquake induced slope failure loads applied to structure foundations and bridge abutments, the lateral force applied to the structure is the force needed to restore the slope level of safety to the required minimum value. But this assumes that the structure and its foundations can be designed to resist the slide loading and the deformation required to mobilize the necessary resistance. If the structural designer

determines that the structure cannot resist the slide load and the deformation it causes, then the slope shall be stabilized to restore its level of safety to the required minimum values (i.e., FS > 1.1 or a resistance factor of 0.9 or less). See Section 8-6.5.2 for procedures to estimate the slide force on a foundation element.

Landslides and slope instability induced by seismic loading not induced by liquefaction should be considered to be concurrent with the structure seismic loading. Therefore, the structure seismic loads and the seismically induced landslide/slope instability forces should be coupled. Also note that when foundation elements are located within a mass that becomes unstable during seismic loading, the potential for soil below the foundation to move away from the foundation, thereby reducing its lateral support, shall be considered.

6-5.4 Lateral Spread and Flow Failure Loads on Structures Due to Liquefaction

Short of doing a rigorous dynamic stress-deformation analysis, there are two different approaches to estimate the lateral spread/flow failure induced load on deep foundations systems— displacement based approach and a force based approach. Displacement based approaches are more prevalent in the United States. A force based approach has been specified in the Japanese codes and is based on case histories from past earthquakes, especially the pile foundation failures observed during the 1995 Kobe earthquake. Overviews of both approaches are presented below.

6-5.4.1 *Displacement Based Approach*

The recommended displacement based approach for evaluating the impact of liquefaction induced lateral spreading and flow failure loads on deep foundation systems is presented in, *Guidelines on Foundation Loading and Deformation Due to Liquefaction Induced Lateral Spreading* (Caltrans 2012) located at www.dot.ca.gov/research/structures/peer_lifeline_program/docs/guidelines_on_ foundation_loading_jan2012.pdf and, as applied for WSDOT projects, *Design Procedure for Bridge Foundations Subject to Liquefaction-Induced Lateral Spreading* (Arduino, et al. 2017) located at: www.wsdot.wa.gov/research/reports/fullreports/874-2.pdf

Additional background on the Caltrans procedure is provided in Ashford, et al. (2011). This procedure provides methods to evaluate deep foundation systems that partially restrain the ground movement caused by lateral spreading/flow failure (restrained case), and those foundation systems in which the ground can freely flow around them (unrestrained case). In general, the restrained case is used for bridge abutments, and the unrestrained case is used for interior bridge piers. However, to make a final determination, the spacing of the foundation elements, their stiffness as well as the stiffness of the superstructure, and the overall geometry of the structure may need to be considered.

To be consistent with the design provisions in this GDM, the Caltrans procedure shall be modified as follows:

- Assessment of liquefaction potential shall be in accordance with Section 6-4.2.2.
- Determination of liquefied residual strengths shall be in accordance with Section 6-4.2.5.

- Lateral spread deformations shall be estimated using methods provided in Section 6-4.3.1.
- The combination of seismic inertial loading and kinematic loading from lateral spreading or flow failure shall be in accordance with Section 6-4.2.7.
- Deep foundation springs shall be determined using Section 6-5.1.2.

6-5.4.2 *Force Based Approaches*

A force based approach to assess lateral spreading induced loads on deep foundations is specified in the Japanese codes. The method is based on back-calculations from pile foundation failures caused by lateral spreading (see Yokoyama, et al., 1997 for background on this method) The pressures on pile foundations are simply specified as follows:

- The liquefied soil exerts a pressure equal to 30 percent of the total overburden pressure (lateral earth pressure coefficient of 0.30 applied to the total vertical stress).
- The nonliquefied "crust" above the liquefied layer that moves with the liquefied layer is equal to the passive pressure of the nonliquefied layer soil moving against the foundation as later flow occurs.
- In both cases, the width of the pressure acting on the foundations is applied to the full foundation group width supporting the bridge pier. However, nothing was discussed in Yokoyama, et al. (1997) regarding the maximum center-center spacing of foundation elements that would result in the force being based in the full foundation group width. For a single foundation element supporting a bridge pier (e.g., a caisson or large diameter shaft), the width over which this lateral pressure is applied may be assumed to be the foundation width.
- Non-liquefied crustal layers exert full passive pressure on the foundation system.

Data from simulated earthquake loading of model piles in liquefiable sands in centrifuge tests indicate that the Japanese Force Method is an adequate design method (Finn, et al., 2004) and therefore may be used to estimate lateral spreading and flow failure forces on bridge foundations.

6-5.4.3 *Dynamic Stress-Deformation Approaches*

Seismically induced slope deformations and their effect on foundations can be estimated through a variety of dynamic stress-deformation computer models such as PLAXIS, DYNAFLOW, FLAC, and OpenSees. These methods can account for varying geometry, soil behavior, and pore pressure response during seismic loading and the impact of these deformations on foundation loading. The accuracy of these models is highly dependent upon the quality of the input parameters and the level of model validation performed by the user for similar applications.

In general, dynamic stress deformation models should not be used for routine design due to their complexity, and due to the sensitivity of deformation estimates to the constitutive model selected and the accuracy of the input parameters. If dynamic stress deformation models are used, they should be validated for the particular application. Dynamic stress-deformation models shall not be used for design on WSDOT projects without the approval of the State Geotechnical Engineer. Furthermore, independent peer review as specified in Section 6-3 shall be conducted.

6-5.5 Downdrag Loads on Structures Due to Liquefaction

Downdrag loads on foundations shall be determined in accordance with Article 3.11.8 of the AASHTO *LRFD Bridge Design Specifications*, GDM Chapter 8, and as specified herein.

The AASHTO *LRFD Bridge Design Specifications*, Article 3.11.8, recommend the use of the nonliquefied skin friction in the layers above the liquefied zone that do not liquefy but will settle, and a skin friction value as low as the residual strength within the soil layers that do liquefy, to calculate downdrag loads for the extreme event limit state. In general, vertical settlement and downdrag cannot occur until the pore pressures generated by the earthquake ground motion begin to dissipate after the earthquake shaking ceases. At this point, the liquefied soil strength will be near its minimum residual strength. At some point after the pore pressures begin to dissipate, and after some liquefaction settlement has already occurred, the soil strength will begin to increase from its minimum residual value. Therefore, the actual shear strength of soil along the sides of the foundation elements in the liquefied zone(s) may be higher than the residual shear strength corresponding to fully liquefied conditions, but still significantly lower than the nonliquefied soil shear strength. Very little guidance on the selection of soil shear strength to calculate downdrag loads due to liquefaction is available; therefore some engineering judgment may be required to select a soil strength to calculate downdrag loads due to liquefaction.

The neutral plane theory approach to assessing downdrag due to liquefaction may also be used, subject to the approval of the WSDOT State Geotechnical Engineer. See Muhunthan et al. (2017) for guidance.

6-5.6 Mitigation Alternatives

The two basic options to mitigate the lateral spread induced loads on the foundation system are to design the structure to accommodate the loads or improve the ground such that the hazard does not occur.

Structural Options (design to accommodate imposed loads) – See Sections 6-5.4.1 (displacement based approach) and 6-5.4.2 (force based approach) for more details on the specific analysis procedures. Once the forces and/or displacements caused by the lateral spreading have been estimated, the structural designer should use those estimates to analyze the effect of those forces and/or displacements will have on the structure to determine if designing the structure to tolerate the deformation and/or lateral loading is structurally feasible and economical.

Ground Improvement – It is often cost prohibitive to design the bridge foundation system to resist the loads and displacements imposed by liquefaction induced lateral loads, especially if the depth of liquefaction extends more than about 20 feet below the ground surface and if a non-liquefied crust is part of the failure mass. Ground improvement to mitigate the liquefaction hazard is the likely alternative if it is not practical to design the foundation system to accommodate the lateral loads.

The primary ground improvement techniques to mitigate liquefaction fall into three general categories, namely densification, altering the soil composition, and enhanced drainage. A general discussion regarding these ground improvement approaches is provided below. Chapter 11, Ground Improvement, should be reviewed for a more detailed discussion regarding the use of these techniques.

Densification and Reinforcement – Ground improvement by densification consists of sufficiently compacting the soil such that it is no longer susceptible to liquefaction during a design seismic event. Densification techniques include vibro-compaction, vibro-flotation, vibro-replacement (stone columns), deep dynamic compaction, blasting, and compaction grouting. Vibro-replacement and compaction grouting also reinforce the soil by creating columns of stone and grout, respectively. The primary parameters for selection include grain size distribution of the soils being improved, depth to groundwater, depth of improvement required, proximity to settlement/ vibration sensitive infrastructure, and access constraints.

For those soils in which densification techniques may not be fully effective to densify the soil adequately to prevent liquefaction, the reinforcement aspect of those methods may still be used when estimating composite shear strength and settlement characteristics of the improved soil volume. See Chapter 11 for details and references that should be consulted for guidance in establishing composite properties for the improved soil volume.

If the soil is reinforced with vertical structural inclusions (e.g., drilled shafts, driven piles, but not including the structure foundation elements) but not adequately densified to prevent the soil from liquefying, the design of the ground improvement method should consider both the shear and moment resistance of the reinforcement elements. For vertical inclusions that are typically not intended to have significant bending resistance (e.g., stone columns, compaction grout columns, etc.), the requirement to resist the potential bending stresses caused by lateral ground movement may be waived, considering only shear resistance of the improved soil plus inclusions, if all three of the following conditions are met:

- The width and depth of the improved soil volume are equal to or greater than the requirements provided in Figure 6-11,
- three or more rows of reinforcement elements to resist the forces contributing to slope failure or lateral spreading are used, and
- the reinforcement elements are spaced center-to-center at less than 5 times the reinforcement element diameter or 10 feet, whichever is less.

The effect of any lateral or vertical deformation of the vertical inclusions on the structure the improved ground supports shall be taken into account in the design of the supported structure.

Figure 6-11 shows the improved soil volume as centered around the wall base or foundation. However, it is acceptable to shift the soil improvement volume to work around site constraints, provided that the edge of the improved soil volume is located at least 5 feet outside of the wall or foundation being protected. Greater than 5 feet may be needed to insure stability of the foundation, prevent severe differential settlement due to the liquefaction, and to account for any pore pressure redistribution that may occur during or after liquefaction initiation.

For the case where a “collar” of improved soil is placed outside and around the foundation, bridge abutment or other structure to be protected from the instability that liquefaction can cause, assume “B” in Figure 6-11 is equal to zero (i.e., the minimum width of improved ground is equal to D + 15 feet, but no greater than “Z”).

If the soil is of the type that can be densified through the use of stone columns, compaction grout columns, or some other means to improve the soil such that it is no longer susceptible to liquefaction within the improved soil volume, Figure 6-11 should also be used to establish the minimum dimensions of the improved soil.

If it is desired to use dimensions of the ground improvement that are less than the minimums illustrated in Figure 6-11, more sophisticated analyses to determine the effect of using reduced ground improvement dimensions should be conducted (e.g., effective stress two dimensional analyses such as FLAC). The objectives of these analyses include prevention of soil shear failure and excessive differential settlement during liquefaction. The amount of differential settlement allowable for this limit state will depend on the tolerance of the structure being protected to such movement without collapse. Use of smaller ground improvement area dimensions shall be approved of the WSDOT State Geotechnical Engineer and shall be independently peer reviewed in accordance with Section 6-3.

Another reinforcement technique that may be used to mitigate the instability caused by liquefaction is the use of geosynthetic reinforcement as a base reinforcement layer. In this case, the reinforcement is designed as described in Chapter 9, but the liquefied shear strength is used to conduct the embankment base reinforcement design.

Figure 6-11 Minimum Dimensions for Soil Improvement Volume Below Foundations and Walls

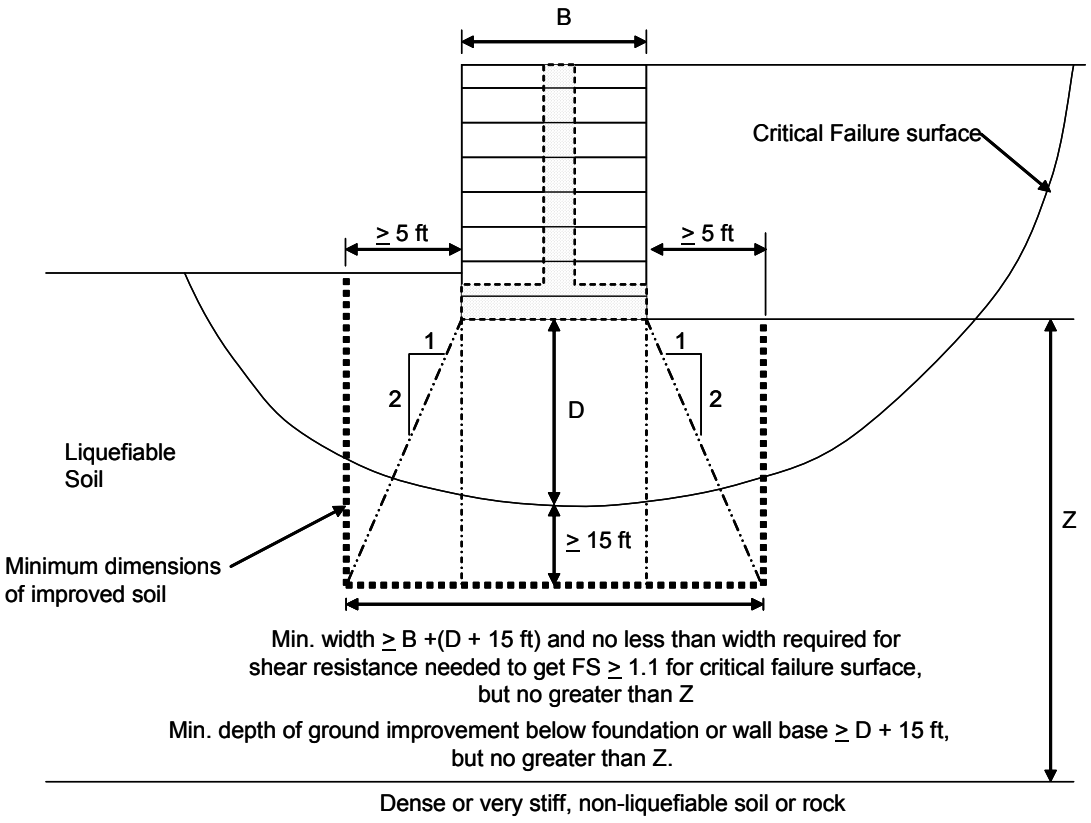

Altering Soil Composition – Altering the composition of the soil typically refers to changing the soil matrix so that it is no longer susceptible to liquefaction. Example ground improvement techniques include permeation grouting (either chemical or micro-fine cement), jet grouting, and deep soil mixing. These types of ground improvement are typically more costly than the densification/reinforcement techniques, but may be the most effective techniques if access is limited, construction induced vibrations must be kept to a minimum, and/or the improved ground has secondary functions, such as a seepage barrier or shoring wall.

Drainage Enhancements – By improving the drainage properties of soils susceptible to liquefaction, it may be possible to prevent the build-up of excess pore water pressures, and thus liquefaction. However, drainage improvement is not considered adequately reliable by WSDOT to prevent excess pore water pressure buildup due to liquefaction for the following reasons:

- The drainage path time for pore pressure to dissipate may be too long,
- There is a potential for drainage structures to become clogged during installation and in service, and
- With drainage enhancements some settlement is still likely.

Therefore, drainage enhancements shall not be used as a means to mitigate liquefaction. However, drainage enhancements may provide some potential benefits with densification and reinforcement techniques such as stone columns.

6-6 References

AASHTO, 2017. AASHTO *LRFD Bridge Design Specifications*, Eighth Edition.

AASHTO, 2011, AASHTO *Guide Specifications for LRFD Seismic Bridge Design*, Second Edition.

Anderson, D. E., Lam, P., Martin, G., and Wang, J., 2008, *Seismic Analysis and Design of Retaining Walls, Buried Structures, Slopes, and Embankments*, NCHRP Report 611, Transportation Research Board, Washington, DC, 137 pp.

Anderson, D. E., Shin, S., and Kramer, S.L., 2011, "Nonlinear, Effective Stress Ground Motion Response Analysis Following AASHTO Specifications for Load and Resistance Factor Design Seismic Bridge Design," *Transportation Research Record No. 2251*, Transportation Research Board, Washington, D.C., pp. 144-154, DOI: 10.3141/2251-15.

Andrus, R. D., and Stokoe II, K. H., 2000, "Liquefaction Resistance of Soils from Shear-Wave Velocity," *Journal of Geotechnical and Geoenvironmental Engineering*, 126(11), pp. 1015-1025.

Arduino, P., McGann, C. R., and Ghofrani, A., 2017, *Design Procedure for Bridge Foundations Subject to Liquefaction-Induced Lateral Spreading*, Washington State Department of Transportation , Report WA-RD 874.2, 70 pp.

ASCE, 2000, Prestandard and Commentary for the Seismic Rehabilitation of Buildings, FEMA 356, 518 pp.

Ashford, S. A., Boulanger, R. W., and Brandenberg, S. J., 2011, *Recommended Design Practice for Pile Foundations in Laterally Spreading Ground*, PEER Report 2011/04, Berkeley, CA, 68 pp.

ATC-MCEER Joint Venture, 2002. *Comprehensive Specification for the Seismic Design of Bridges*, NCHRP Report 472, National Cooperative Highway Research Program, Washington DC.

Atwater, Brian F., 1996. *Coastal Evidence for Great Earthquakes in Western Washington*. Assessing Earthquake Hazards and Reducing Risk in the Pacific Northwest, USGS Professional Paper 1560 Vol. 1: pp. 77-90.

Bakun, W.H., Haugerud, R.A., Hopper, M.G., and Ludwin, R.S., 2002. "The December 1872 Washington State Earthquake." *Bulletin of the Seismological Society of America*, Vol. 92, No. 8, pp. 3239-3258.

Bommer, J. J., and Acevedo, A. B., 2004, The Use of Real Earthquake Accelerograms as Input to Dynamic Analysis, Journal of Earthquake Engineering, Vol. 8, Special Issue 1, Imperial College Press, pp. 43-91.

Ashford, S. A., Boulanger, R. W., and Brandenberg, S. J., 2011, Recommended Design Practice for Pile Foundations in Laterally Spreading Ground, PEER Report 2011/04, Berkeley, CA, 68 pp.

Baker, J.W., 2013, *An Introduction to Probabilistic Seismic Hazard Analysis*, White Paper 2, No. 1, 79 pp.

Boulanger, R.W. and Idriss, I.M., 2006, "Liquefaction Susceptibility Criteria for Silts and Clays," *Journal of Geotechnical and Geoenvironmental Engineering*, *ASCE* Vol. 132, No. 11, Nov., pp. 1413-1426.

Boulanger, R.W. and Idriss, I.M., 2014, CPT and SPT Liquefaction Triggering Procedures, Report No. UCD/CGM-14/01, Center for Geotechnical Modeling, Univ. California at Davis, 138 pp.

Boulanger, R. W., Kutter, B. L., Brandenberg, S. J., Singh, P., and Chang, D., 2003, *Pile Foundations in Liquefied and Laterally Spreading Ground During Earthquakes*: *Centrifuge Experiments & Analyses*, College of Engineering, University of California at Davis, 205 pp.

Bowles, J.E., 1996. *Foundation Analysis and Design*, Fifth Edition. The McGraw-Hill Companies, Inc., New York.

Brandenberg, S. J., Boulanger, R. W., Kutter, B. L., and Chang, D., 2007b, "Static Pushover Analyses of Pile Groups in Liquefied and Laterally Spreading Ground in Centrifuge Tests," *ASCE Journal of Geotechnical and Geoenvironmental Engineering*, Vol. 133, No. 9, pp. 1055-1066.

Bray, J. D., and Sancio, R. B., 2006, "Assessment of the Liquefaction Susceptibility of Fine Grained Soils, *ASCE Journal of Geotechnical and Geoenvironmental Engineering*, Vol. 132, No. 9, pp. 1165-1177.

Caltrans, 2012, *Guidelines on Foundation Loading and Deformation Due to Liquefaction Induced Lateral Spreading*, Sacramento, CA, 44 pp. (http://www.dot.ca. gov/research/structures/peer_lifeline_program/docs/guidelines_on_foundation_loading_jan2012.pdf).

Cetin, K.O., Seed, R.B., Der Kiureghian, A., Tokimatsu, K. Harder, L.F., Kayen, R.E., and Moss, R.E.S., 2004. "Standard Penetration Test-Based Probabilistic and Deterministic Assessment of Seismic Soil Liquefaction Potential," *Journal of Geotechnical and Geoenvironmental Engineering*, *ASCE*, Vol. 130, No. 12, Dec., pp. 1314-1340.

Dickenson, S. E., McCullough, N. J., Barkau, M. G., and Wavra, B. J., 2002, *Assessment and Mitigation of Liquefaction Hazards to Bridge Approach Embankments in Oregon*, Final Report SPR 361, FHWA-OR-RD-03-04, 210 pp.

Discussion and Closure of "Response of 0.6 m Cast-in-Steel-Shell Pile in Liquefied Soil under Lateral Loading by Thomas J. Weaver, Scott A. Ashford, and Kyle M. Rollins, 2005, *ASCE Journal of Geotechnical and Geoenvironmental Engineering*, Vol. 131, No. 1, pp. 94-102", *ASCE* 2006, pp. 1238-1241.

Dobry, R., Taboada, V, and Liu., L., 1995. "Centrifuge modeling of liquefaction effects during earthquakes." *Proc. 1st Intl. Conf. On Earthquake Geotechnical Engineering*, K. Ishihara, ed., Tokyo, Japan, Vol. 3, pp. 1291-1324.

Darendeli, M., 2001, *Development of a New Family of Normalized Modulus Reduction and Material Damping Curves*, Ph.D. Dissertation, Department. of Civil Engineering, University of Texas, Austin, 362 pp.

EduPro Civil Systems, Inc., 1999. *ProShake Version 1.10*, Computer Software. Electrical Power Research Institute (EPRI), 1993. *Guidelines for Site Specific Ground Motions*. Palo Alto, CA. Electrical Power Research Institute, November-TR-102293.

Isenhower, W. M., and Wang, S.-T., 2015, *Technical Manual for LPile*, Version 8, Ensoft, Inc., 238 pp.

Finn, W.D. Liam, Ledbetter, R.H. and Wu, G., 1994. "Liquefaction in Silty Soils: Design and Analysis." *Ground Failures Under Seismic Conditions*, Geotechnical Special Publication 44. *ASCE*, New York, New York, pp. 51-76.

Finn, W.D. Liam and Fujita, N., 2004. "Behavior of Piles in Liquefiable Soils during Earthquakes: Analysis and Design Issues." *Proceedings: Fifth International Conference on Case Histories in Geotechnical Engineering*, New York, New York, April 13-17, 2004.

Goter, S.K., 1994. *Earthquakes in Washington and Oregon*; *1872-1993*, *1994*, USGS

Open-File Report No. 94-226A.

Hashash, Y.M.A., Musgrove, M.I., Harmon, J.A., Groholski, D.R., Phillips, C.A., and Park, D. (2016) "*DEEPSOIL 6.1*, *User Manual*". Urbana, IL, Board of Trustees of University of Illinois at Urbana-Champaign, http://deepsoil.cee.illinois.edu.

International Code Council, Inc., 2006. *2006 International Building Code*. Country Club Hills, IL.

Idriss, I. M., and Boulanger, R. W., 2007, "Residual Shear Strength of Liquefied Soils," *Proceedings of the 27th USSD Annual Meeting and Conference, Modernization and Optimization of Existing Dams and Reservoirs*.

Idriss, I. M., and Boulanger, R. W., 2008, *Soil Liquefaction During Earthquakes*, Earthquake Engineering Research Institute (EERI), MNO-12, 226 pp.

Imai, T. and Tonouchi, K., 1982, "Correlation of N-Value with S-Wave Velocity and Shear Modulus," Proc. 2nd European Symposium on Penetration Testing, Amsterdam, The Netherlands, pp. 67-72.

Ishihara, K., and Yoshimine, M., 1992. "Evaluation of settlements in sand deposits following liquefaction during earthquakes." *Soils and Foundations*, *JSSMFE*, Vol. 32, No. 1, March, pp. 173-188.

Jamiolkowski, M., D.C.F. LoPresti, and M. Manassero, 1991, "Evaluation of Relative Density and Shear Strength of Sands from Cone Penetration Test and Flat Dilatometer Test," Soil Behavior and Soft Ground Construction (GSP 119), American Society of Civil Engineers, Reston, Va., pp. 201–238.

Jibson R. and Jibson M., 2003. *Java Program for using Newmark's Method and Simplified Decoupled Analysis to Model Slope Deformations During Earthquakes*. Computer Software. USGS Open File Report 03-005.

Johnson, S.Y., Dadisman, S.V., Childs, J.R., and Stanley, W.D., 1999. "Active Tectonics of the Seattle Fault and Central Puget Sound, Washington: Implications for Earthquake Hazards." *Geological Society of America Bulletin*, Vol. 111, No. 7, pp. 1042-1053.

Kaklamanos, J., Bradley, B. A., Thompson, E. M., and Baise, L. G., 2013, "Critical parameters affecting bias and variability in site response analyses using KiK-net downhole array data," *Bulletin of the Seismological Society of America*, 103: pp. 1733-1749.

Kaklamanos, J., L. G. Baise, E. M. Thompson, and L. Dorfmann, 2015, "Comparison of 1D linear, equivalent-linear, and nonlinear site response models at six KiK-net validation sites," *Soil Dynamics and Earthquake Engineering*, 69, pp. 207-219.

Kavazanjian, E., Wang, J.-N. J., Martin, G. R., Shamsabadi, A., Lam, I. (P.), Dickenson, S. E., and Hung, C. J., 2011, Geotechnical Engineering Circular #3, *LRFD Seismic Analysis and Design of Transportation Geotechnical Features and Structural Foundations*. Report No. FHWA-NHI-11-032.

Kim, B. and Y. M. A. Hashash, 2013, "Site Response Analysis Using Downhole Array Recordings during the March 2011 Tohoku-Oki Earthquake and the Effect of Long-Duration Ground Motions," *Earthquake Spectra*, 29: S37-S54.

Kim, Byungmin. Hashash, Youssef, M. A., Stewart, J. P., Rathje, E. M., Harmon, J. A., Musgrove, M. I., Campbell, K. W., and Silva, W. J., 2016, "Relative Differences between Nonlinear and Equivalent-Linear 1-D Site Response Analyses," *Earthquake Spectra*.

Kramer, S.L., 1996 U.S. Department of Transportation, Federal Highway Administration, Washington, D.C. *Geotechnical Earthquake Engineering*. Prentice- Hall, Inc., Upper Saddle River, NJ.

Kramer, S.L., 1996, *Dynamic Response of Peats*, WA-RD 412.1, 55 pp.

Kramer, S.L., 2000, "Dynamic Response of Mercer Slough Peat," *ASCE Journal of Geotechnical and Geoenvironmental Engineering*, Vol. 126, No. 6, pp. 504-510.

Kramer, S. L., 2007. *Evaluation of Liquefaction Hazards in Washington State*, Washington State Department of Transportation, Report WA-RD 668.1, 312 pp.

Kramer, S.L., Arduino, P., and Sideras, S.S., 2012, *Earthquake Ground Motion Selection*, WA-RD 791.1, 60 pp.

Kramer, S.L. and Baska, D.A., 2007. "Estimation of permanent displacements due to lateral spreading," *Journal of Geotechnical and Geoenvironmental Engineering*, *ASCE*

Kramer, S.L. and Paulsen, S.B., 2004. "Practical Use of Geotechnical Site Response Models." *PEER Lifelines Program Workshop on the Uncertainties in Nonlinear Soil Properties and the Impact on Modeling Dynamic Soil Response*. Berkeley, CA. March 18-19, 2004.

Kramer, S.L. and Mayfield, R. T., 2007, "Return Period of Soil Liquefaction," *ASCE Journal of Geotechnical and Geoenvironmental Engineering*, Vol. 133, No. 7, pp. 802-813.

Kwok A.O.L., Stewart J.P., Hashash Y.M.A., Matasovic N., Pyke R., Wang Z., Yang Z., 2007, "Use of exact solutions of wave propagation problems to guide implementation of nonlinear, time-domain ground response analysis routines," *ASCE*, J. Geotech. Eng., 133(11), pp. 1385-1398.

Lee, M. and Finn, W., 1978. *DESRA-2*, *Dynamic Effective Stress Response Analysis of Soil Deposits with Energy Transmitting Boundary Including Assessment of Liquefaction Potential*. Soil Mechanics Series No. 38, Dept. of Civil Engineering, University of British Columbia, Vancouver, B.C.

Marsh, M. L., Buckle, I. G., Kavazanjian, E., 2014, *LRFD Seismic Analysis and Design of Bridges Reference Manual*, NHI Course 130093 and 130093A, Report No. FHWA NHI-15-004, Federal Highway Administration, 608 pp.

Matasović, Neven, and Ordóñez, Gustovo, 2007, *D-MOD2000*, GeoMotions, LLC, Computer Software.

Matasović, Neven, and Hashash, Youssef, 2012, *Practices and Procedures for Site-Specific Evaluations of Earthquake Ground Motions*, NCHRP Synthesis 428, Transportation Research Board, Washington, D.C., 89 pp.

Mayne, P.W. and Rix, G.J., 1993, "Gmax-qc Relationships for Clays," Geotechnical Testing Journal, ASTM, Vol. 16, No. 1, pp. 54-60.

McGuire, R.K., 2004. *Seismic Hazard and Risk Analysis*. Monograph MNO-10, Earthquake Engineering Research Institute, Oakland, CA. 221 pp.

Moss, R.E.S., Seed, R.B., Kayen, R.E., Stewart, J.P., Der Kiureghian, A. and Cetin, K.O., 2006. "CPT-Based Probabilistic and Deterministic Assessment of In Situ Seismic Soil Liquefaction Potential," *Journal of Geotechnical and Geoenvironmental Engineering*, *ASCE*, Vol. 132, No. 8, Aug., pp. 1032-1051.

Muhunthan, B., Vijayathasan, N. V., and Abbasi, B., 2017, Liquefaction-Induced Downdrag on Drilled Shafts, Washington State Department of Transportation , Report WA-RD 865.1, 162 pp.

National Academies of Sciences, Engineering, and Medicine. 2016. *State of the Art and Practice in the Assessment of Earthquake-Induced Soil Liquefaction and Its Consequences*. Washington, DC: The National Academies Press. doi: 1017226/23474.

NEHRP, 2011, Selecting and Scaling Earthquake Ground Motions for Performing Response-History Analyses, NIST GCR 11-917-15, 256 pp.

Olson, S.M. and Stark, T.D., 2002. "Liquefied Strength Ratio from Liquefaction Flow Failure Case Histories," *Canadian Geotechnical Journal*, Vol. 39, No. 3, June, pp 629-647.

Ordoñez, G.A., 2000. *Shake 2000*, Computer Software.

Phillips C., Hashash, Y.M.A., 2009, "Damping formulation for nonlinear 1D site response analyses," *Soil Dyn. Earthquake Eng.*, 29(7), pp. 1143-1158.

Rollins, K.M., Evans, M.D., Springman-Allison, S.M, and Norrish, R.M., 1998, "Shear Modulus and Damping Relationships for Gravels," *ASCE Journal of Geotechnical and Geoenvironmental Engineering*, Vol. 24, No. 5, pp. __.

Rollins, K. M., Gerber, T. M., Lane, J. D., and Ashford, S. A., 2005a, "Lateral Resistance of a Full-Scale Pile Group in Liquefied Sand," *ASCE Journal of Geotechnical and Geoenvironmental Engineering*, Vol. 131, No. 1, pp. 115-125.

Rollins, K. M.; Hales, L. J.; and Ashford, S. A. 2005b. "*p-y* Curves for Large Diameter Shafts in Liquefied Sands from Blast Liquefaction Tests," *Seismic Performance and Simulation of Pile Foundations in Liquefied and Laterally Spreading Ground*, Geotechnical Special Publication No. 145, *ASCE*, pp. 11-23.

Sabatini, P.J., Bachus, R.C., Mayne, P.W., Schneider, J.A., and Zettler, T.E., 2002. *Geotechnical Engineering Circular No. 5*, *Evaluation of Soil and Rock Properties*, Report No. FHWA-IF-02-034. U.S. Department of Transportation, Federal Highway Administration, Washington, D.C.

Satake, Kenji, et al., 1996. "Time and Size of a Giant Earthquake in Cascadia Inferred from Japanese Tsunami Records of January 1700." *Nature*, Vol. 379, pp. 247-248.

Seed, R. B., Cetin, K. O., Moss, R. E. S., Kammerer, A. M., Pestana, J. M., Riemer, M. F., Sancio, R. B., Bray, J. D., Kayen, R. E., Faris, A., 2003, *Recent Advances in Soil Liquefaction Engineering: A unified and Consistent Framework*, Earthquake Engineering Research Center, Univ. of CA Berkeley, Report No. EERC 2003-06, 71 pp.

Seed. H.B., Wong, R.T., Idriss, I.M. and Tokimatsu, K., 1984, "Moduli and Damping Factors for Dynamic Analyses of Cohesionless Soils," Report No. UCB/EERC- 84/14, Earthquake Engineering Research Center, University of California, Berkeley, California.

Stewart, J.P., Archuleta, R.J., and Power, M.S., 2008, *Earthquake Spectra, Special Issue on the Next Generation Attenuation Project*, 24(1), EERI.

Tokimatsu, K. and Seed, H.B., 1987. "Evaluation of Settlement in Sands Due to Earthquake Shaking." *ASCE Journal of Geotechnical Engineering*, Vol. 113, No. 8, August 1987.

United States Geological Survey (USGS), 2002. *Earthquake Hazards Program*. Website link: www.eqhazmaps.usgs.gov

United States Geological Survey (USGS), 2017, *Illustration of Seismic Source Zones in the Pacific Northwest*, https://geomaps.wr.usgs.gov/pacnw/pacnweq/pdf/subd_eqpg.pdf

Vucetic, M. and Dobry, R. (1991). *Effect of Soil Plasticity on Cyclic Response*. Journal of Geotechnical Engineering, Vo. 117, No. 1, pp. 89-107.

Washington State Department of Transportation, 2012, *LRFD Bridge Design Manual* Publication Number M 23-50.

Washington State Department of Transportation, 2012, *Design Manual*, Publication Number M 22-01.

Weaver, T. J., Ashford, S. A., and Rollins, K. M., 2005, "Response of a 0.6 m Cast-in-Steel-Shell Pile in Liquefied Soil Under Lateral Loading," *ASCE Journal of Geotechnical and Geoenvironmental Engineering*, Vol. 131, No. 1, pp. 94-102.

Yelin, T.S., Tarr, A.C., Michael, J.A., and Weaver, C.S., 1994. *Washington and Oregon Earthquake History and Hazards*. USGS, Open File Report 94-226B.

Yokoyame, K., Tamura, K., and Matsuo, O, 1997, "Design Methods of Bridge Foundations against Soil Liquefaction-induced Ground Flow," *Second Italy-Japan Workshop on Seismic Design and Retrofit of Bridges*, Rome, Italy, pp. 1-23.

Youd, T.L.; Idriss, I.M.; Andrus, R.D.; Arango, I.; Castro, G.; Christian, J.T.; Dobry, R.; Finn, W.D.; Harder, L.; Hynes, M.E.; Ishihara, K.; Koester, J.P.; Liao,

S.S.C.; Marcuson, W.F.; Martin, G.R.; Mitchell, J.K.; Moriwaki, Y.; Power, M.S.; Robertson, P.K.; Seed, R.B. and Stokoe, K.H., 2001. "Liquefaction Resistance of Soils: Summary Report from the 1996 NCEER and 1998 NCEER/NSF Workshops on Evaluation of Liquefaction Resistance of Soils." *ASCE Journal of Geotechnical and Geoenvironmental Engineering*, Vol. 127, No. 10, pp. 817-833.

Youd, T.L.; Hansen, C.M. and Bartlett, S.F., 2002. "Revised Multilinear Regression Equations for Prediction of Lateral Spread Displacement.". *ASCE Journal of Geotechnical and Geoenvironmental Engineering*, Vol. 128, No. 12, pp. 1007-1017.

Youd, T.L. and Carter, B.L., 2005. "Influence of Soil Softening and Liquefaction on Spectral Acceleration," *Journal of Geotechnical and Geoenvironmental Engineering*, *ASCE*, Vol. 131, No. 7, pp. 811-825.

Zhang, G., Robertson, P. K., & Brachman, R. W. I, 2002, "Estimating Liquefaction-Induced Ground Settlements from CPT for Level Ground," *Canadian Geotechnical Journal*, 39(5), pp. 1168-1180.

Zhang, G., Robertson, P. K., & Brachman, R. W. I.,2004, Estimating Liquefaction- Induced Lateral Displacements Using the Standard Penetration Test or Cone Penetration Test, *ASCE Journal of Geotechnical and Geoenvironmental Engineering*, Vol. 130, No. 8, pp. 861-871.

6-7 Appendices

Appendix 6-A Site Specific Seismic Hazard and Site Response

Appendix 6-B High Resolution Seismic Acceleration Maps

Appendix 6-A Site Specific Seismic Hazard and Site Response

Site specific seismic hazard and response analyses shall be conducted in accordance with Section 6-3 and the AASHTO *Guide Specifications for LRFD Seismic Bridge Design*. When site specific hazard characterization is conducted, it shall be conducted using the design hazard levels specified in Section 6-3.1.

6-A.1 Background Information for Performing Site Specific Analysis

Washington State is located in a seismically active region. The seismicity varies throughout the state, with the seismic hazard generally more severe in Western Washington and less severe in Eastern Washington. Earthquakes as large as magnitude 8 to 9 are considered possible off the coast of Washington State. The regional tectonic and geologic conditions in Washington State combine to create a unique seismic setting, where some earthquakes occur on faults, but more commonly historic earthquakes have been associated with large broad fault zones located deep beneath the earth's surface. The potential for surface faulting exists, and as discussed in this appendix a number of surface faults have been identified as being potential sources of seismic ground shaking; however, surface vegetation and terrain have made it particularly difficult to locate surface faults. In view of this complexity, a clear understanding of the regional tectonic setting and the recognized seismic source zones is essential for characterizing the seismic hazard at a specific site in Washington State.

6-A.1.1 *Regional Tectonics*

Washington State is located at the convergent continental boundary known as the Cascadia Subduction Zone (CSZ). The CSZ lies at the boundary between two crustal tectonic plates, where the offshore Juan de Fuca plate moves northeastward, converging with and subducting beneath the continental North American plate. The CSZ extends from mid-Vancouver Island to Northern California. The interaction of these two plates results in three potential seismic source zones as depicted on Figure 6-A-1. These three seismic source zones are: (1) the shallow crustal source zone, (2) the deep CSZ Benioff or intraplate source zone, and (3) the CSZ interplate or interface source zone (i.e., the Cascadia Subduction Zone).

Figure 6-A-1 The Three Potential Seismic Source Zones Present in the Pacific Northwest (USGS 2017)

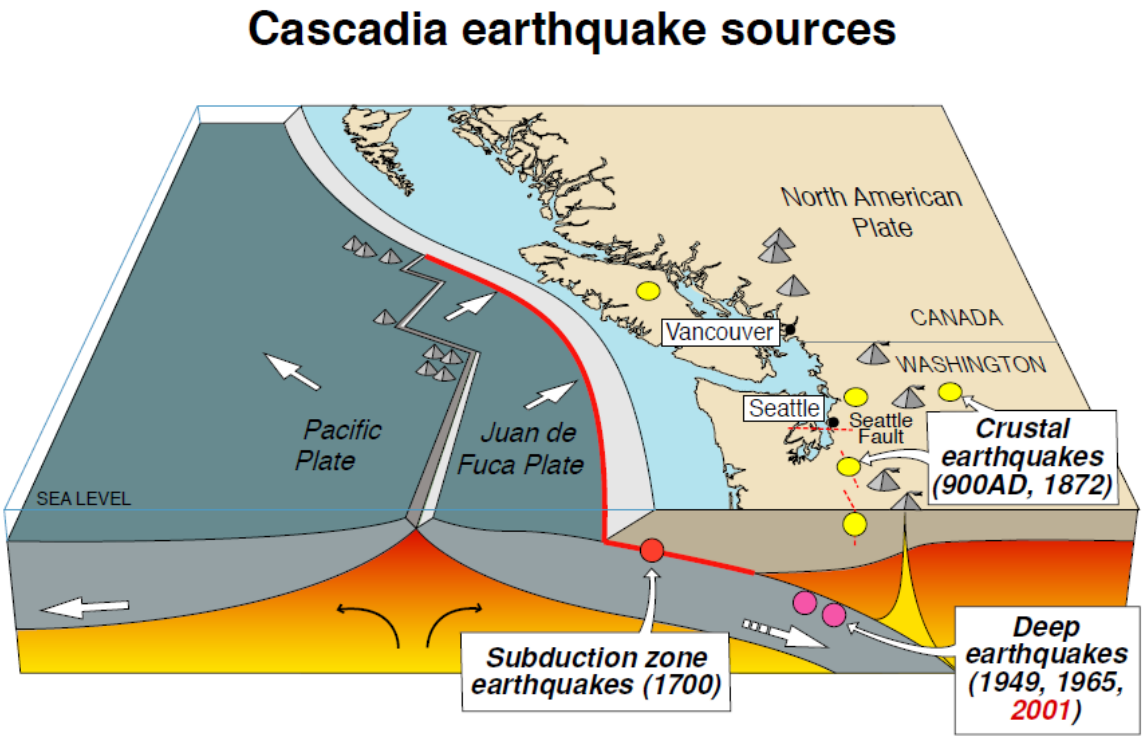

	Source	Affected area	Max. Size	Recurrence
●	Subduction Zone	W.WA, OR, CA	M 9	500-600 yr
●	Deep Juan de Fuca plate	W.WA, OR,	M 7+	30-50 yr
●	Crustal faults	WA, OR, CA	M 7+	Hundreds of yr?

6-A.1.2 *Seismic Source Zones*

If conducting a site specific hazard characterization, as a minimum, the following source zones should be evaluated (all reported magnitudes are moment magnitudes):

Shallow Crustal Source Zone – The shallow crustal source zone is used to characterize shallow crustal earthquake activity within the North American Plate throughout Washington State. Shallow crustal earthquakes typically occur at depths ranging up to 12 miles. The shallow crustal source zone is characterized as being capable of generating earthquakes up to about magnitude 7.5. Large shallow crustal earthquakes are typically followed by a sequence of aftershocks.

Crustal seismicity is generally characterized using two types of models: known fault source models (such as the Seattle Fault zone, South Whidbey Island fault system, and the Tacoma fault), and seismicity-based background sources (which are based on historical data from earthquakes on unidentified or uncharacterized faults).

The largest known earthquakes associated with the shallow crustal source zone in Washington State include an event on the Seattle Fault about 900 AD and the 1872 North Cascades earthquake. The Seattle Fault event was believed to have been magnitude 7 or greater (Johnson, 1999), and the 1872 North Cascades earthquake is estimated to have been between magnitudes 6.8 and 7.4. The location of the 1872 North Cascades earthquake is uncertain; however, recent research suggests the earthquake's intensity center was near the south end of Lake Chelan (Bakun et al, 2002). Other large, notable shallow earthquakes in and around the state include the 1936 Milton-Freewater, Oregon earthquake (magnitude 6.1) and the North Idaho earthquake (magnitude 5.5) (Goter, 1994).

Benioff Source Zone – CSZ Benioff source zone earthquakes are also referred to as intraplate, intraslab, or deep subcrustal earthquakes. Benioff zone earthquakes occur within the subducting Juan de Fuca Plate between depths of 20 and 40 miles and typically have no large aftershocks. Extensive faulting results as the Juan de Fuca Plate is forced below the North American plate and into the upper mantle. Benioff zone earthquakes primarily contribute to the seismic hazard within Western Washington.

The Olympia 1949 (M = 7.1), the Seattle 1965 (M = 6.5), and the Nisqually 2001 (M = 6.8) earthquakes are considered to be Benioff zone earthquakes. The Benioff zone is characterized as being capable of generating earthquakes up to magnitude 7.5. The recurrence interval for large earthquakes originating from the Benioff source zone is believed to be shorter than for the shallow crustal and CSZ interplate source zones—anecdotally, Benioff zone earthquakes in Western Washington occur every 15 to 35 years or so, based on recent history. The deep focal depth of these earthquakes tends to dampen the shaking intensity when compared to shallow crustal earthquakes of similar magnitudes.

CSZ Interplate Source Zone – The Cascadia Subduction Zone (CSZ) is an approximately 650-mile long thrust fault that extends along the Pacific Coast from mid-Vancouver Island to Northern California. CSZ interplate earthquakes result from rupture of all or a portion of the convergent boundary between the subducting Juan de Fuca plate and the overriding North American plate. The fault surfaces approximately 50 to 75 miles off the Washington coast. The width of the seismogenic portion of the CSZ interplate fault is approximately 50 to 60 miles wide and varies along its length. As the fault becomes deeper, materials being faulted become ductile and the fault is unable to store mechanical stresses.

The CSZ is considered as being capable of generating earthquakes of magnitude 8 to magnitude 9. No earthquakes on the CSZ have been instrumentally recorded; however, through the geologic record and historical records of tsunamis in Japan, it is believed that the most recent CSZ event occurred in the year 1700 (Atwater, 1996 and Satake, et al, 1996). Recurrence intervals for CSZ interplate earthquakes are thought to be on the order of 400 to 600 years. Paleogeologic evidence suggests five to seven interplate earthquakes may have been generated along the CSZ over the last 3,500 years at irregular intervals.

6-A.2 Design Earthquake Magnitude

In addition to identifying the site's source zones, the design earthquake(s) produced by the source zones must be characterized for use in evaluating seismic geologic hazards such as liquefaction and lateral spreading. Typically, design earthquake(s) are defined by a specific magnitude, source-to-site distance, and ground motion characteristics.

The following guidelines should be used for determining a site's design earthquake(s):

The design earthquake should consider hazard-compatible events occurring on crustal and subduction-related sources.

More than one design earthquake may be appropriate depending upon the source zones that contribute to the site's seismic hazard and the impact that these earthquakes may have on site response.

The design earthquake should be consistent with the design hazard level prescribed in Section 6-3.1.

The USGS interactive deaggregation tool (https://earthquake.usgs.gov/hazards/interactive/) provides a summary of contribution to seismic hazard for earthquakes of various magnitudes and source to site distances for a given hazard level and may be used to evaluate relative contribution to ground motion from seismic sources. Since this chapter has been updated to require the use of the 2014 maps and associated data, it is required to use the 2014 deaggregation data. Note that magnitudes presented in the deaggregation data represent contribution to a specified hazard level and should not simply be averaged for input into analyses such as liquefaction and lateral spreading. Instead, the deaggregation data should be used to assess the relative contribution to the probabilistic hazard from the various source zones. If any source zone contributes more than about 10 percent of the total hazard, design earthquakes representative from each of those source zones should be used for analyses.

For liquefaction or lateral spreading analysis, one of the following approaches should be used to account for the earthquake magnitude, in order of preference:

Use all earthquake magnitudes applicable at the specific site (from the deggregation) using the multiple scenario or performance based approaches for liquefaction assessment as described by Kramer and Mayfield (2007) and Kramer (2007). The hazard level used for this analysis shall be consistent with the hazard level selected for the structure for which the liquefaction analysis is being conducted (typically, a probability of exceedance of 7 percent in 75 years in accordance with the AASHTO *Guide Specifications for LRFD Seismic Bridge Design*). While performance based techniques can be accomplished using the WSLIQ software (Kramer, 2007), the performance based option in that software uses the 2002 USGS ground motions and has not been updated to include more recent ground motion data that would be consistent with the ground motions used to produce the 2014 USGS seismic maps. Until that software is updated to use the new ground motion database, the performance based option in WSLIQ shall not be used.

If a single or a few larger magnitude earthquakes dominate the deaggregation, the magnitude of the single dominant earthquake or the weighted mean of the few dominant earthquakes in the deaggregation (weighted by the percent contribution of each source) should be used.

For routine design, a default moment magnitude of 7.0 should be used for western Washington and 6.0 for eastern Washington, except within 30 miles of the coast where Cascadia Subduction zone events contribute significantly to the seismic hazard. In that case, the geotechnical designer should use a moment magnitude of 8.0. These default magnitudes should not be used if they represent a smaller hazard than shown in the deaggregation data. Note that these default magnitudes are intended for use in simplified empirically based liquefaction and lateral spreading analysis only and should not be used for development of the design ground motion parameters.

6-A.3 Probabilistic and Deterministic Seismic Hazard Analyses

Probabilistic seismic hazard analysis (PSHA) and deterministic seismic hazard analysis (DSHA) can be completed to characterize the seismic hazard at a site. A DSHA consists of evaluating the seismic hazard at a site for an earthquake of a specific magnitude occurring at a specific location. A PSHA consists of completing numerous deterministic seismic hazard analyses for all feasible combinations of earthquake magnitude and source to site distance for each earthquake source zone. The result of a PSHA is a relationship of the mean annual rate of exceedance of the ground motion parameter of interest with each potential seismic source considered. Since the PSHA provides information on the aggregate risk from each potential source zone, it is more useful in characterizing the seismic hazard at a site if numerous potential sources could impact the site. The USGS 2014 probabilistic hazard maps on the USGS website are based on PSHA.

PSHAs and DSHAs may be required where the site is located close to a fault, long-duration ground motion is expected, or if the importance of the bridge is such that a longer exposure period is required by WSDOT. For a more detailed description and guidelines for development of PSHAs and DSHAs, see Kramer (1996), McGuire (2004), and Baker (2013).

Site specific hazard analysis should include consideration of topographic and basin effects, fault directivity and near field effects.

At a minimum, seismic hazard analysis should consider the following sources:

- Cascadia subduction zone interplate (interface) earthquake
- Cascadia subduction zone intraplate (Benioff) earthquake
- Crustal earthquakes associated with non-specific or diffuse sources (potential sources follow). These sources will account for differing tectonic and seismic provinces and include seismic zones associated with Cascade volcanism
- Earthquakes on known and potentially active crustal faults. The best source of fault information that can be considered for design is the USGS at the following website: https://earthquake.usgs.gov/hazards/qfaults

When PSHA or DSHA are performed for a site, the following information shall be included as a minimum in project documentation and reports:

Overview of seismic sources considered in analysis

Summary of seismic source parameters including length/boundaries, source type, slip rate, segmentation, maximum magnitude, recurrence models and relationships used, source depth and geometry. This summary should include the rationale behind selection of source parameters.

Assumptions underlying the analysis should be summarized in either a table (DSHA) or in a logic tree (PSHA)

The 2014 USGS probabilistic hazard maps as published herein essentially account for regional seismicity and attenuation relationships, recurrence rates, maximum magnitude of events on known faults or source zones, and the location of the site with respect to the faults or source zones. The USGS data is sufficient for most sites, and more sophisticated seismic hazard analyses are generally not required; the exceptions may be to capture the effects of sources not included in the USGS model, to assess near field or directivity influences, or to incorporate topographic impacts or basin effects.

The 2014 USGS hazard maps only capture the effects of near- fault motions (i.e., ground motion directivity or pulse effects) or bedrock topography (i.e., so called basin effects) in a limited manner. These effects modify ground motions, particularly at certain periods, for sites located near active faults (typically with 6 miles) or for sites where significant changes in bedrock topography occurs. For specific requirements regarding near fault effects, see the AASHTO *Guide Specifications for LRFD Seismic Bridge Design*.

6-A.4 Selection of Attenuation Relationships

Attenuation relationships describe the decay of earthquake energy as it travels from the seismic source to the project site. Many of the newer published relationships are capable of accommodating site soil conditions as well as varying source parameters (e.g., fault type, location relative to the fault, near-field effects, etc.) In addition, during the past 10 years, specific attenuation relationships have been developed for Cascadia subduction zone sources. For both deterministic and probabilistic hazard assessments, attenuation relationships used in analysis should be selected based on applicability to both the site conditions and the type of seismic source under consideration. Rationale for the selection of and assumptions underlying the use of attenuation relationships for hazard characterization shall be clearly documented.

If deterministic methods are used to develop design spectra, the spectral ordinates should be developed using a range of ground motion attenuation relationships consistent with the source mechanisms. At least three to four attenuation relationships should be used.

6-A.5 Site Specific Ground Response Analysis

6-A.5.1 *Design/Computer Models*

Site specific ground response analyses are most commonly done using one-dimensional equivalent-linear or non linear procedures. A one dimensional analysis is generally based on the assumption that soils and ground surface are laterally uniform and horizontal and that ground surface motions can be modeled by vertically propagating shear wave through laterally uniform soils. The influence of vertical motions, surface waves, laterally non-uniform soil conditions, incoherence and spatial variation of ground motions are not accounted for in conventional, one-dimensional analyses (Kavazanjian, et al., 2011). A variety of site response computer models are available to geotechnical designers for dynamic site response analyses. In general, there are three classes of dynamic ground response models: 1) one dimensional equivalent linear, 2) one dimensional nonlinear, and 3) multi-dimension models. See Matasović and Hashash (2012) for a good overview of the types of models available for site specific ground response analysis, their advantages, and their limitations.

One-Dimensional Equivalent Linear Models – One-dimensional equivalent linear site response computer codes, such as ProShake (EduPro Civil Systems, 1999) or Shake2000 (Ordoñez, 2000), and DEEPSOIL (Hashash, et al. 2016) use an iterative total stress approach to estimate the nonlinear, inelastic behavior of soils. These programs use an average shear modulus and material damping over the entire cycle of loading to approximate the hysteresis loop.

The equivalent linear model provides reasonable results for small strains (less than about 1 to 2 percent) (Kramer and Paulsen, 2004). A-priori thresholds to evaluate differences between analyses and determine if a nonlinear analysis is needed (or if an equivalent linear analysis is acceptable) are provided in Kim et al. (2016). Additional information on the use and comparison of equivalent linear and nonlinear models is provided in Kaklamanos, et al. (2013, 2015), and Kim and Hashash (2013).

One-Dimensional Nonlinear Models – One-dimensional, nonlinear computer codes, such as D-MOD 2000, DESRA, and DEEPSOIL use direct numerical integration of the incremental equation of motion in small time steps and account for the nonlinear soil behavior through use of constitutive soil models. Depending upon the constitutive model used, these programs can model pore water pressure buildup and permanent deformations. The accuracy of nonlinear models depends on the proper selection of parameters used by constitutive soil model and the ability of the constitutive model to represent the response of the soil to ground shaking.

Another issue that can affect the accuracy of the model is how the G/G_{max} and damping relations are modeled and the ability of the design model to adapt those relations to site specific data. Additionally, the proper selection of a Rayleigh damping value can have a significant effect on the modeling results. In general, a value of 1 to 2% is needed to maintain numerical stability. It should be recognized that the Rayleigh damping will act in addition to hysteretic damping produced by the nonlinear, inelastic soil model. Rayleigh damping should therefore be limited to the smallest value that provides the required numerical stability. The results of analyses using values greater than 1 to 2% should be interpreted with great caution. Additional information regarding Rayleigh damping as well as newer damping models is provided in Kwok, et al. (2007), and Phillips and Hashash (2009).

See Section 6-4.2.2 for specific issues related to liquefaction modeling when using one-dimensional nonlinear analysis methods.

Two and Three Dimensional Models – Two- and three-dimensional site response analyses can be performed using computer codes, such as QUAD4, PLAXIS, FLAC, DYNAFLOW, LSDYNA, and OPENSEES, and use both equivalent linear and nonlinear models. Many attributes of the two- and three-dimensional models are similar to those described above for the one-dimensional equivalent linear and nonlinear models. However, the two- and three-dimensional computer codes typically require significantly more model development and computational time than one-dimensional analyses. The important advantages of the two- and three-dimensional models include the ability to consider soil anisotropy, irregular soil stratigraphy, surface waves, irregular topography, and soil-structure interaction. Another advantage with the two- and three-dimensional models is that seismically induced permanent displacements can be estimated. Furthermore, these modeling platforms are better equipped for nonlinear effective stress analysis for liquefiable sites and can incorporate models that can capture large strain dilation (e.g., UBCSand). Successful application of these codes requires considerable knowledge and experience. Expert peer review of the analysis shall be conducted, in accordance with Section 6-3 unless approval to not conduct the peer review is obtained from the State Geotechnical Engineer.

6-A.5.2 *Input Parameters for Site Specific Response Analysis*

The input parameters required for both equivalent-linear and nonlinear site specific ground response analysis include the site stratigraphy (including soil layering and depth to rock or rock-like material), dynamic properties for each stratigraphic layer (including soil and rock stiffness, e.g., shear wave velocity), and ground motion time histories. Soil and rock parameters required by the equivalent linear models include the shear wave velocity or initial (small strain) shear modulus and unit weight for each layer, and curves relating the shear modulus and damping ratio as a function of shear strain (See Section 6-2.2).

The parameters required for cyclic nonlinear soil models generally consist of a backbone curve that models the stress strain path during cyclic loading and rules for loading and unloading, stiffness degradation, pore pressure generation and other factors (Kramer, 1996). More sophisticated nonlinear soil constitutive models may require definition of yield surfaces, hardening functions, and flow rules. Many of these models require specification of multiple parameters whose determination may require a significant laboratory testing program.

One of the most critical aspects of the input to a site-specific response analysis is the soil and rock stiffness and impedance values or shear wave velocity profile. Great care should be taken in establishing the shear wave velocity profile – it should be measured whenever possible. Equal care should be taken in developing soil models, including shear wave velocity profiles, to adequately model the potential range and variability in ground motions at the site and adequately account for these in the site specific design parameters (e.g., spectra). A long bridge, for example, may cross materials of significantly different stiffness (i.e., velocities) and/or soil profiles beneath the various bridge piers and abutments. Because different soil profiles can respond differently, and sometimes (particularly when very soft and/or liquefiable soils are present) very differently, great care should be taken in selecting and averaging soil profiles and properties prior to performing the site response analyses. In most cases, it is preferable to analyze the individual profiles

and then aggregate the responses rather than to average the soil properties or profiles and analyze only the averaged profile.

A suite of ground motion time histories is required for both equivalent linear and nonlinear site response analyses as described in Section 6-A.6. The use of at least three input ground motions is required and seven or more is preferred for site specific ground response analysis (total, regardless of the number of source zones that need to be considered. Guidelines for selection and development of ground motion time histories are also described in Section 6-A.6.

6-A.6 Analysis Using Acceleration-Time Histories

The site specific analyses discussed in Section 6-3 and in this appendix are focused on the development of site specific design spectra and use in other geotechnical analyses. However, site specific time histories may be required as input in nonlinear structural analysis.

Time history development and analysis for site-specific ground response or other analyses shall be conducted as specified in the AASHTO *Guide Specifications for LRFD Seismic Bridge Design*. For convenience, Article 3.4.4 and commentary of the AASHTO Guide Specifications are provided below:

> *Earthquake acceleration time histories will be required for site-specific ground motion response evaluations and for nonlinear inelastic dynamic analysis of bridge structures. The time histories for these applications shall have characteristics that are representative of the seismic environment of the site and the local site conditions, including the response spectrum for the site.*
>
> *Response-spectrum-compatible time histories shall be developed from representative recorded earthquake motions. Analytical techniques used for spectrum matching shall be demonstrated to be capable of achieving seismologically realistic time series that are similar to the time series of the initial time histories selected for spectrum matching. The recorded time histories should be scaled to the approximate level of the design response spectrum in the period range of significance unless otherwise approved by the Owner. At least three response-spectrum-compatible time histories shall be used for representing the design earthquake (ground motions having 7 percent probability of exceedance in 75 years) when conducting dynamic ground motion response analyses or nonlinear inelastic modeling of bridges.*
>
> - *For site-specific ground motion response modeling single components of separate records shall be used in the response analysis. The target spectrum used to develop the time histories is defined at the base of the soil column. The target spectrum is obtained from the USGS/AASHTO Seismic Hazard Maps or from a site-specific hazard analysis as described in Article 3.4.3.1.*
> - *For nonlinear time history modeling of bridge structures, the target spectrum is usually located at or close to the ground surface, i.e., the rock spectrum has been modified for local site effects. Each component of motion shall be modeled. The issue of requiring all three orthogonal components (x, y, and z) of design motion to be input simultaneously shall be considered as a requirement when conducting a nonlinear time-history analysis. The design actions shall be taken as the maximum response calculated for the three ground motions in each principal direction.*

If a minimum of seven time histories are used for each component of motion, the design actions may be taken as the mean response calculated for each principal direction. For near-field sites (D < 6 miles) the recorded horizontal components of motion selected should represent a near-field condition and that they should be transformed into principal components before making them response-spectrum- compatible. The major principal component should then be used to represent motion in the fault-normal direction and the minor principal component should be used to represent motion in the fault-parallel direction.

Characteristics of the seismic environment of the site to be considered in selecting time-histories include: tectonic environment (e.g., subduction zone; shallow crustal faults in western United States or similar crustal environment; eastern United States or similar crustal environment); earthquake magnitude; type of faulting (e.g., strike-slip; reverse; normal); seismic-source-to-site distance; basin effects, local site conditions; and design or expected ground-motion characteristics (e.g., design response spectrum; duration of strong shaking; and special ground- motion characteristics such as near-fault characteristics). Dominant earthquake magnitudes and distances, which contribute principally to the probabilistic design response spectra at a site, as determined from national ground motion maps, can be obtained from deaggregation information on the U.S. Geological Survey website: https://earthquake.usgs.gov/hazards/interactive.

It is desirable to select time-histories that have been recorded under conditions similar to the seismic conditions at the site listed above, but compromises are usually required because of the multiple attributes of the seismic environment and the limited data bank of recorded time-histories. Selection of time-histories having similar earthquake magnitudes and distances, within reasonable ranges, are especially important parameters because they have a strong influence on response spectral content, response spectral shape, duration of strong shaking, and near- source ground-motion characteristics. It is desirable that selected recorded motions be somewhat similar in overall ground motion level and spectral shape to the design spectrum to avoid using very large scaling factors with recorded motions and very large changes in spectral content in the spectrum-matching approach. If the site is located within 6 miles of an active fault, then intermediate-to-long-period ground-motion pulses that are characteristic of near-source time-histories should be included if these types of ground motion characteristics could significantly influence structural response. Similarly, the high short-period spectral content of near-source vertical ground motions should be considered.

Ground-motion modeling methods of strong-motion seismology are being increasingly used to supplement the recorded ground-motion database. These methods are especially useful for seismic settings for which relatively few actual strong-motion recordings are available, such as in the central and eastern United States. Through analytical simulation of the earthquake rupture and wave- propagation process, these methods can produce seismologically reasonable time series.

Response spectrum matching approaches include methods in which time series adjustments are made in the time domain (Lilhanand and Tseng, 1988; Abrahamson, 1992) and those in which the adjustments are made in the frequency domain (Gasparini and Vanmarcke, 1976; Silva and Lee, 1987; Bolt and Gregor, 1993). Both of these approaches can be used to modify existing time-histories to achieve a close match to the design response spectrum while maintaining fairly well the basic time-domain character of the recorded or simulated time-histories. To minimize changes to the time-domain

characteristics, it is desirable that the overall shape of the spectrum of the recorded time-history not be greatly different from the shape of the design response spectrum and that the time-history initially be scaled so that its spectrum is at the approximate level of the design spectrum before spectrum matching.

When developing three-component sets of time histories by simple scaling rather than spectrum matching, it is difficult to achieve a comparable aggregate match to the design spectra for each component of motion when using a single scaling factor for each time-history set. It is desirable, however, to use a single scaling factor to preserve the relationship between the components. Approaches for dealing with this scaling issue include:

- *Use of a higher scaling factor to meet the minimum aggregate match requirement for one component while exceeding it for the other two,*
- *Use of a scaling factor to meet the aggregate match for the most critical component with the match somewhat deficient for other components, and*
- *Compromising on the scaling by using different factors as required for different components of a time-history set.*

While the second approach is acceptable, it requires careful examination and interpretation of the results and possibly dual analyses for application of the horizontal higher horizontal component in each principal horizontal direction.

The requirements for the number of time histories to be used in nonlinear inelastic dynamic analysis and for the interpretation of the results take into account the dependence of response on the time domain character of the time histories (duration, pulse shape, pulse sequencing) in addition to their response spectral content.

Additional guidance on developing acceleration time histories for dynamic analysis may be found in publications by the Caltrans Seismic Advisory Board Adhoc Committee (CSABAC) on Soil-Foundation-Structure Interaction (1999) and the U.S. Army Corps of Engineers (2000). CSABAC (1999) also provides detailed guidance on modeling the spatial variation of ground motion between bridge piers and the conduct of seismic soil-foundation-structure interaction (SFSI) analyses. Both spatial variations of ground motion and SFSI may significantly affect bridge response. Spatial variations include differences between seismic wave arrival times at bridge piers (wave passage effect), ground motion incoherence due to seismic wave scattering, and differential site response due to different soil profiles at different bridge piers. For long bridges, all forms of spatial variations may be important. For short bridges, limited information appears to indicate that wave passage effects and incoherence are, in general, relatively unimportant in comparison to effects of differential site response (Shinozuka et al., 1999; Martin, 1998). Somerville et al. (1999) provide guidance on the characteristics of pulses of ground motion that occur in time histories in the near-fault region.

In addition to the information sources cited above, Kramer (1996), Bommer and Acevedo (2004), NEHRP (2011), and Kramer, et al. (2012), should be consulted for specific requirements on the selection, scaling, and use of time histories for ground motion characterization and dynamic analysis.

Final selection of time histories to be used will depend on two factors:

- How well the response spectrum generated from the scaled time histories matches the design response spectrum, and
- Similarity of the fault mechanisms for the time histories to those of recognized seismic source zones that contribute to the site's seismic hazard Also, if the earthquake records are used in the site specific ground response model as bedrock motion, the records should be recorded on sites with bedrock characteristics. The frequency content, earthquake magnitude, and peak bedrock acceleration should also be used as criteria to select earthquake time histories for use in site specific ground response analysis.

The requirements in the first bullet are most important to meet if the focus of the seismic modeling is structural and foundation design. The requirements in the second bullet are most important to meet if liquefaction and its effects are a major consideration in the design of the structure and its foundations. Especially important in the latter case is the duration of strong motion.

Note that a potential issue with the use of a spectrum-compatible motion that should be considered is that in western Washington, the uniform hazard spectrum (UHS) may have significant contributions from different sources that have major differences in magnitudes and site-to-source distances. The UHS cannot conveniently be approximated by a single earthquake source. For example, the low period (high frequency) part of the UHS spectrum may be controlled by a low-magnitude, short- distance event and the long period (low frequency) portion by a large-magnitude, long-distance event. Fitting a single motion to that target spectrum will therefore produce an unrealistically energetic motion with an unlikely duration. Using that motion as an input to an analysis involving significant amounts of nonlinearity (such as some sort of permanent deformation analysis, or the analysis of a structure with severe loading) can lead to overprediction of response (soil and/or structural). However, if the soil is overloaded by this potentially unrealistically energetic prediction of ground motion, the soil could soften excessively and dampen a lot of energy (large strains), more than would be expected in reality, leading to an unconservative prediction of demands in the structure.

To address this potential issue, time histories representing the distinctly different seismic sources (e.g., shallow crustal versus subduction zone) should be spectrally matched or scaled to correspondingly distinct, source-specific spectra. A source- specific spectrum should match the UHS or design spectrum over the period range in which the source is the most significant contributor to the ground motion hazard, but will likely be lower than the UHS or design spectrum at other periods for which the source is not the most significant contributor to the hazard. However, the different source-spectra in aggregate should envelope the UHS or design spectrum. Approval by the State Geotechnical Engineer and State Bridge Engineer is required for use of source-specific spectra and time histories.

Appendix 6-B High Resolution Seismic Acceleration Maps

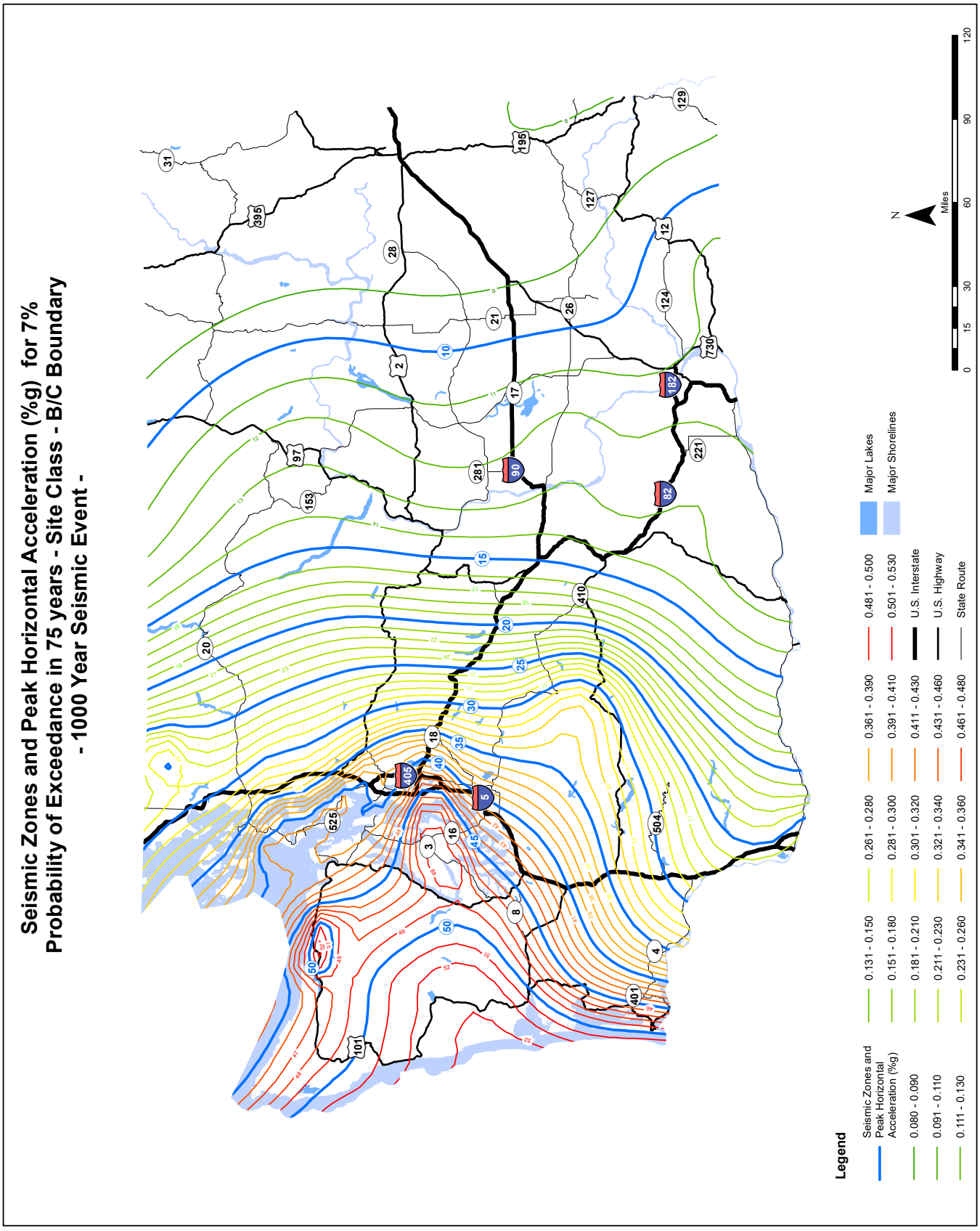

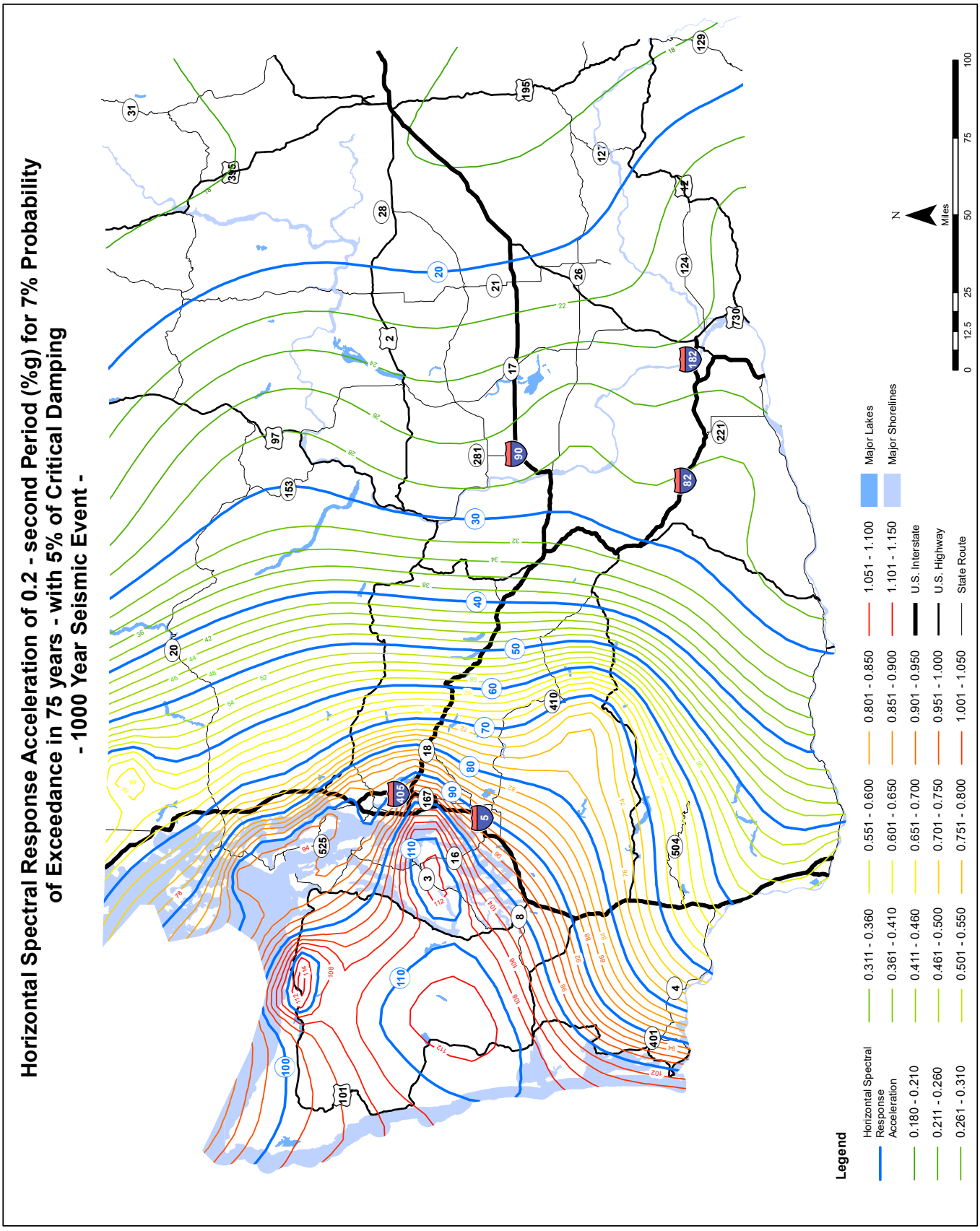
Horizontal Spectral Response Acceleration of 0.2 - second Period (%g) for 7% Probability of Exceedance in 75 years - with 5% of Critical Damping - 1000 Year Seismic Event -
Legend
Horizontal Spectral Response Acceleration
0.180 - 0.210
0.211 - 0.260
0.261 - 0.310
0.311 - 0.360
0.361 - 0.410
0.411 - 0.460
0.461 - 0.500
0.501 - 0.550
0.551 - 0.600
0.601 - 0.650
0.651 - 0.700
0.701 - 0.750
0.751 - 0.800
0.801 - 0.850
0.851 - 0.900
0.901 - 0.950
0.951 - 1.000
1.001 - 1.050
1.051 - 1.100
1.101 - 1.150
Major Lakes
Major Shorelines
U.S. Interstate
U.S. Highway
State Route
N
Miles
0
12.5
25
50
75
100

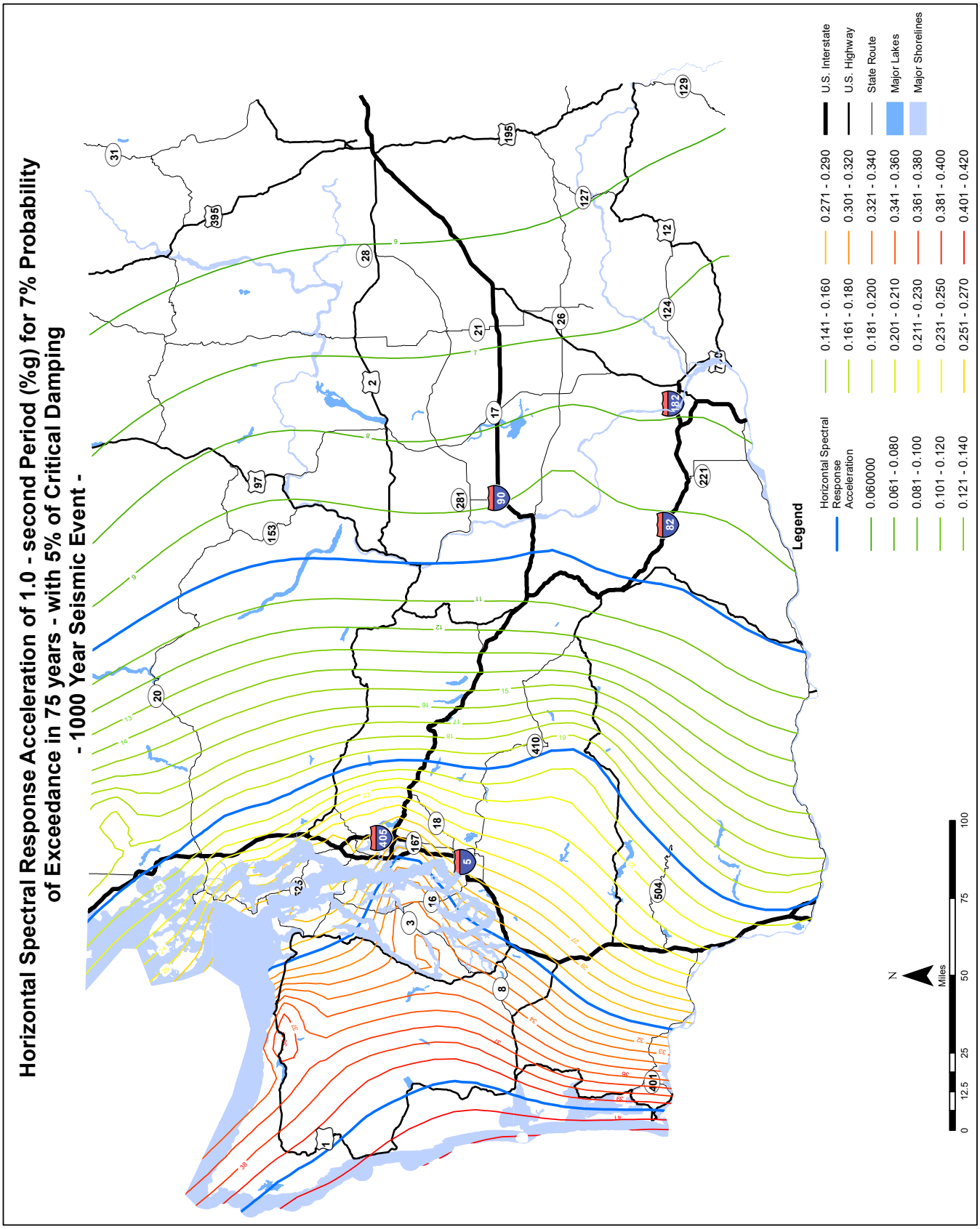
Horizontal Spectral Response Acceleration of 1.0 - second Period (%g) for 7% Probability of Exceedance in 75 years - with 5% of Critical Damping
- 1000 Year Seismic Event -
Legend
Horizontal Spectral Response Acceleration
0.060000
0.061 - 0.080
0.081 - 0.100
0.101 - 0.120
0.121 - 0.140
0.141 - 0.160
0.161 - 0.180
0.181 - 0.200
0.201 - 0.210
0.211 - 0.230
0.231 - 0.250
0.251 - 0.270
0.271 - 0.290
0.301 - 0.320
0.321 - 0.340
0.341 - 0.360
0.361 - 0.380
0.381 - 0.400
0.401 - 0.420
U.S. Interstate
U.S. Highway
State Route
Major Lakes
Major Shorelines
N
Miles
0
12.5
25
50
75
100

Chapter 7 Slope Stability Analysis

7.1 Overview

Slope stability analysis is used in a wide variety of geotechnical engineering problems, including, but not limited to, the following:

- Determination of stable cut and fill slopes
- Assessment of overall stability of retaining walls, including global and compound stability (includes permanent systems and temporary shoring systems)
- Assessment of overall stability of shallow and deep foundations for structures located on slopes or over potentially unstable soils, including the determination of lateral forces applied to foundations and walls due to potentially unstable slopes
- Stability assessment of landslides (mechanisms of failure, and determination of design properties through back-analysis), and design of mitigation techniques to improve stability
- Evaluation of instability due to liquefaction

Types of slope stability analyses include rotational slope failure, translational failure, irregular surfaces of sliding, and infinite slope failure. Stability analysis techniques specific to rock slopes, other than highly fractured rock masses that can in effect be treated as soil, are described in Chapter 12. Detailed stability assessment of landslides is described in Chapter 13.

7.2 Development of Design Parameters and Other Input Data for Slope Stability Analysis

The input data needed for slope stability analysis is described in Chapter 2 for site investigation considerations, Chapters 9 and 10 for fills and cuts, and Chapter 13 for landslides. Chapter 5 provides requirements for the assessment of design property input parameters.

Detailed assessment of soil and rock stratigraphy is critical to the proper assessment of slope stability, and is in itself a direct input parameter for slope stability analysis. It is important to define any thin weak layers present, the presence of slickensides, etc., as these fine details of the stratigraphy could control the stability of the slope in question. Knowledge of the geologic nature of the strata present at the site and knowledge of past performance of such strata may also be critical factors in the assessment of slope stability. See Chapter 5 for additional requirements and discussion regarding the determination and characterization of geologic strata and the determination of ESU's for design purposes.

Whether long-term or short-term stability is in view, and which will control the stability of the slope, will affect the selection of soil and rock shear strength parameters used as input in the analysis. For short-term stability analysis, undrained shear strength parameters should be obtained. For long-term stability analysis, drained shear strength parameters should be obtained. For assessing the stability of landslides, residual shear strength parameters will be needed, since the soil has in such has typically deformed

enough to reach a residual value. For highly overconsolidated clays, such as the Seattle clays (e.g., Lawton Formation), if the slope is relatively free to deform after the cut is made or is otherwise unloaded, even if a structure such as a wall is placed to retain the slope after that deformation has already occurred, residual shear strength parameters should be obtained and used for the stability analysis. See Chapter 5 for requirements on the development of shear strength parameters.

Detailed assessment of the groundwater regime within and beneath the slope/landslide mass is also critical. Detailed piezometric data at multiple locations and depths within and below the slope will likely be needed, depending on the geologic complexity of the stratigraphy and groundwater conditions. Potential seepage at the face of the slope must be assessed and addressed. In some cases, detailed flow net analysis may be needed. If seepage does exit at the slope face, the potential for soil piping should also be assessed as a slope stability failure mechanism, especially in highly erodable silts and sands. If groundwater varies seasonally, long-term monitoring of the groundwater levels in the soil should be conducted. If groundwater levels tend to be responsive to significant rainfall events, the long-term groundwater monitoring should be continuous, and on-site rainfall data collection should also be considered.

7.3 Design Requirements

Limit equilibrium methods shall be used to assess slope stability. The Modified Bishop, simplified Janbu, Spencer, or other widely accepted slope stability analysis methods should be used for rotational, translational and irregular surface failure mechanisms. Each limit equilibrium method varies with regard to assumptions used and how stability is determined. Therefore, a minimum of two limit equilibrium methods should be used and compared to one another to ensure that the the level of safety in the slope is accurately assessed. In cases where the stability failure mechanisms anticipated are not well modeled by limit equilibrium techniques, or if deformation analysis of the slope is required, more sophisticated analysis techniques (e.g., finite difference methods such as is used by the computer program FLAC) may be used in addition to the limit equilibrium methodologies. Since these more sophisticated methods are quite sensitive to the quality of the input data and the details of the model setup, including the selection of constitutive models used to represent the material properties and behavior, limit equilibrium methods should also be used in such cases, and input parameters should be measured or assessed from back-analysis techniques whenever possible. If the differences in the results are significant, the reasons for the differences shall be assessed with consideration to any available field observations to assess the correctness of the design model used. If the reasons for the differences cannot be assessed, and if the FLAC model provides a less conservative result than the limit equilibrium based methods, the limit equilibrium based methods shall govern the design.

If the potential slope failure mechanism is anticipated to be relatively shallow and parallel to the slope face, with or without seepage affects, an infinite slope analysis should be conducted. Typically, slope heights of 15 to 20 feet or more are required to have this type of failure mechanism. For infinite slopes consisting of cohesionless soils that are either above the water table or that are fully submerged, the factor of safety for slope stability is determined as follows:

$$FS = \frac{Tan\phi}{Tan\beta} \quad (7\text{-}1)$$

Where:
ϕ = the angle of internal friction for the soil
β = the slope angle relative to the horizontal

For infinite slopes that have seepage at the slope face, the factor of safety for slope stability is determined as follows:

$$FS = \left(\frac{\gamma_b}{\gamma s}\right) \frac{Tan\phi}{Tan\beta} \quad (7\text{-}2)$$

Where:
γb = the buoyant unit weight of the soil
γs = the saturated unit weight of the soil

Considering that the buoyant unit weight is roughly one-half of the saturated unit weight, seepage on the slope face can reduce the factor of safety by a factor of two, a condition which should obviously be avoided through some type of drainage if at all possible; otherwise much flatter slopes will be needed. When using the infinite slope method, if the FS is near or below 1.0 to 1.15, severe erosion or shallow slumping is likely. Vegetation on the slope can help to reduce this problem, as the vegetation roots add cohesion to the surficial soil, improving stability. Note that conducting an infinite slope analysis does not preclude the need to check for deeper slope failure mechanisms, such as would be assessed by the Modified Bishop or similar methods listed above.

Translational (block) or noncircular searches are generally more appropriate for modeling thin weak layers or suspected planes of weakness, and for modeling stability of long natural slopes or of geologic strata with pronounced shear strength anisotropy (e.g., due to layered/bedded macrostructure or pre-existing fracture patterns). If there is a disparately strong unit either below or above a thin weak unit, the user must ensure that the modeled failure plane lies within the suspected weak unit so that the most critical failure surface is modeled as accurately as possible. Circular searches for these types of conditions should generally be avoided as they do not generally model the most critical failure surface.

For very simplified cases, design charts to assess slope stability are available. Examples of simplified design charts are provided in NAVFAC DM-7 (US Department of Defense, 2005). These charts are for a c-φ soil, and apply only to relatively uniform soil conditions within and below the cut slope. They do not apply to fills over relatively soft ground, as well as to cuts in primarily cohesive soils. Since these charts are for a c-φ soil, a small cohesion will be needed to perform the calculation. If these charts are to be used, it is recommended that a cohesion of 50 to 100 psf be used in combination with the soil friction angle obtained from SPT correlation for relatively clean sands and gravels. For silty to very silty sands and gravels, the cohesion could be increased to 100 to 200 psf, but with the friction angle from SPT correlation (see Chapter 5) reduced by 2 to 3 degrees, if it is not feasible to obtain undisturbed soil samples suitable for laboratory testing to measure the soil shear strength directly. This should be considered general guidance, and good engineering judgment should be applied when selecting soil parameters for this type of an analysis. Simplified design charts shall only be used for final design of non-critical slopes that are approximately 10 feet

in height or less and that are consistent with the simplified assumptions used by the design chart. Simplified design charts may be used as applicable for larger slopes for preliminary design.

The detailed guidance for slope stability analysis provided by Abramson, et al. (1996) should be used.

For additional design requirements for temporary slopes, including application of the applicable WAC's, see Sections 15.7 and 9.5.5.

7.4 Resistance Factors and Safety Factors for Slope Stability Analysis

For overall stability analysis of walls and structure foundations, design shall be consistent with Chapters 6, 8 and 15 and the AASHTO LRFD Bridge Design Specifications. For slopes adjacent to but not directly supporting structures, a maximum resistance factor of 0.75 should be used. For foundations on slopes that support structures such as bridges and retaining walls, a maximum resistance factor of 0.65 should be used. This reduced resistance factor also applies if the slope is not directly supporting the structure, but if slope failure occurred, it could impact and damage the structure. Exceptions to this could include minor walls that have a minimal impact on the stability of the existing slope, in which the 0.75 resistance factor may be used. Since these resistance factors are combined with a load factor of 1.0 (overall stability is assessed as a service limit state only), these resistance factors of 0.75 and 0.65 are equivalent to a safety factor of 1.3 and 1.5, respectively.

For general slope stability analysis of permanent cuts, fills, and landslide repairs, a minimum safety factor of 1.25 should be used. Larger safety factors should be used if there is significant uncertainty in the analysis input parameters. The Monte Carlo simulation features now available in some slope stability computer programs may be used for this purpose, from which a probability of failure can be determined, provided a coefficient of variation for each of the input parameters can be ascertained. For considerations regarding the statistical characterization of input parameters, see Allen, et al. (2005). For minimum safety factors and resistance factors for temporary cuts, see Section 15.7.

For seismic analysis, if seismic analysis is conducted (see Chapter 6 for policies on this issue), a maximum resistance factor of 0.9 should be used for slopes involving or adjacent to walls and structure foundations. This is equivalent to a safety factor of 1.1. For other slopes (cuts, fills, and landslide repairs), a minimum safety factor of 1.05 shall be used.

Conditions	Probability of Failure, Pf
Unacceptable in most cases	> 0.1
Temporary structures with no potential life loss and low repair cost	0.1
Slope of riverbank at docks, no alternative docks, pier shutdown threatens operations	0.01 to 0.02
Low consequences of failure, repairs when time permits, repair cost less than cost to go to lower Pf	0.01
Existing large cut on interstate highway	0.01 to 0.02
New large cut (i.e., to be constructed) on interstate highway	0.01 or less
Acceptable in most cases except if lives may be lost	0.001
Acceptable for all slopes	0.0001
Unnecessarily low	0.00001

Slope Stability – Probability of Failure (Adapted From Santamarina, et al., 1992)
Table 7-1

7.5 References

Abramson, L., Boyce, G., Lee, T., and Sharma, S., 1996, *Slope Stability and Stabilization Methods*, Wiley, ISBN 0471106224.

Allen, T., Nowak, A., and Bathurst, R., 2005, Calibration to Determine Load and Resistance Factors for Geotechnical and Structural Design. TRB Circular E-C079, 83 pp.

Santamarina, J. C., Altschaeffl, A. G., and Chameau, J. L., 1992, "Reliability of Slopes: Incorporating Qualitative Information," Transportation Research Board, TRR 1343, Washington, D.C., pp. 1-5.

US Department of Defense, 2005, *Soil Mechanics*, Unified Facilities Criteria (UFC), UFC 3-220-10N,

Chapter 8 Foundation Design

8.1 Overview

This chapter covers the geotechnical design of bridge foundations, cut-and-cover tunnel foundations, foundations for walls, and hydraulic structure foundations (pipe arches, box culverts, flexible culverts, etc.). Chapter 17 covers foundation design for lightly loaded structures, and Chapter 18 covers foundation design for marine structures. Both shallow (e.g., spread footings) and deep (piles, shafts, micro-piles, etc.) foundations are addressed. In general, the load and resistance factor design approach (LRFD) as prescribed in the AASHTO LRFD Bridge Design Specifications shall be used, unless a LRFD design methodology is not available for the specific foundation type being considered (e.g., micro-piles). Structural design of bridge and other structure foundations is addressed in the WSDOT *LRFD Bridge Design Manual* (BDM).

All structure foundations within WSDOT Right of Way or whose construction is administered by WSDOT shall be designed in accordance with the *Geotechnical Design Manual* (GDM) and the following documents:

- *Bridge Design Manual* LRFD M23-50
- *Standard Plans for Road, Bridge, and Municipal Construction* M 21-01
- AASHTO LRFD Bridge Design Specifications, U.S.

The most current versions of the above referenced manuals including all interims or design memoranda modifying the manuals shall be used. In the case of conflict or discrepancy between manuals, the following hierarchy shall be used: those manuals listed first shall supersede those listed below in the list.

8.2 Overall Design Process for Structure Foundations

The overall process for geotechnical design is addressed in Chapters 1 and 23. For design of structure foundations, the overall WSDOT design process, including both the geotechnical and structural design functions, is as illustrated in Figure 8-1.

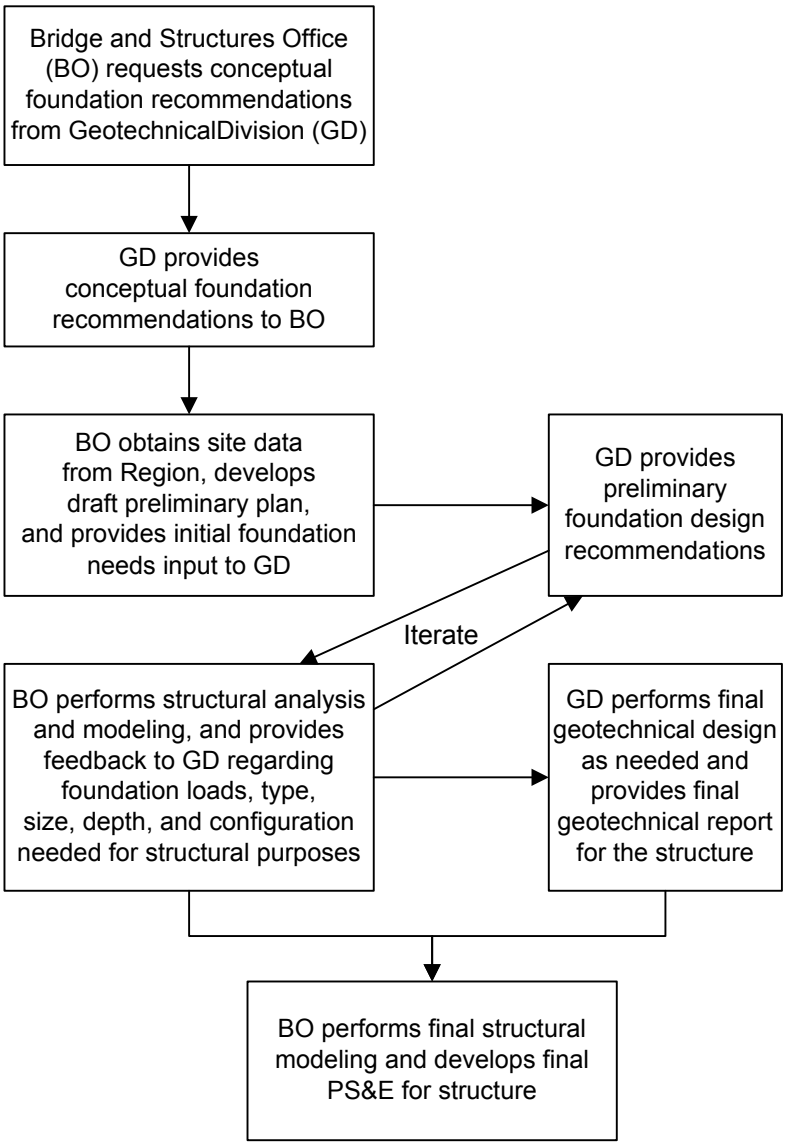

Overall Design Process for LRFD Foundation Design
Figure 8-1

The steps in the flowchart are defined as follows:

Conceptual Bridge Foundation Design – This design step results in an informal communication/report produced by the Geotechnical Office at the request of the Bridge and Structures Office. This informal communication/report, consistent with what is described for conceptual level geotechnical reports in Chapter 23, provides a brief description of the anticipated site conditions, an estimate of the maximum slope feasible for the bridge approach fills for the purpose of determining bridge length, conceptual foundation types feasible, and conceptual evaluation of potential geotechnical hazards such as liquefaction. The purpose of these recommendations is to provide enough geotechnical information to allow the bridge preliminary plan to be produced. This type of conceptual evaluation could also be applied to other types of structures, such as tunnels or special design retaining walls.

Develop Site data and Preliminary Plan – During this phase, the Bridge and Structures Office obtains site data from the Region (see *Design Manual* Chapters 610, 710, and 730) and develops a preliminary bridge plan (or other structure) adequate for the Geotechnical Office to locate borings in preparation for the final design of the structure (i.e., pier locations are known with a relatively high degree of certainty). The Bridge and Structures Office would also provide the following information to the Geotechnical Office to allow them to adequately develop the preliminary foundation design:

- Anticipated structure type and magnitudes of settlement (both total and differential) the structure can tolerate.
- At abutments, the approximate maximum elevation feasible for the top of the foundation in consideration of the foundation depth.
- For interior piers, the number of columns anticipated, and if there will be single foundation elements for each column, or if one foundation element will support multiple columns.
- At stream crossings, the depth of scour anticipated, if known. Typically, the Geotechnical Office will pursue this issue with the HQ Hydraulics Office.
- Any known constraints that would affect the foundations in terms of type, location, or size, or any known constraints which would affect the assumptions which need to be made to determine the nominal resistance of the foundation (e.g., utilities that must remain, construction staging needs, excavation, shoring and falsework needs, other constructability issues).

Preliminary Foundation Design – This design step results in a memorandum produced by the Geotechnical Office at the request of the Bridge and Structures Office that provides geotechnical data adequate to do the structural analysis and modeling for all load groups to be considered for the structure. The geotechnical data is preliminary in that it is not in final form for publication and transmittal to potential bidders. In addition, the foundation recommendations are subject to change, depending on the results of the structural analysis and modeling and the effect that modeling and analysis has on foundation types, locations, sizes, and depths, as well as any design assumptions made by the geotechnical designer. Preliminary foundation recommendations may also be subject to change depending on the construction staging needs and other constructability issues that are discovered during this design phase. Geotechnical work conducted during this stage typically includes completion of the field exploration program to the final PS&E level, development of foundation types and capacities feasible, foundation depths needed, P-Y curve data and soil spring data for seismic modeling, seismic site characterization and estimated ground acceleration, and recommendations to address known constructability issues. A description of subsurface conditions and a preliminary subsurface profile would also be provided at this stage, but detailed boring logs and laboratory test data would usually not be provided.

Structural Analysis and Modeling – In this phase, the Bridge and Structures Office uses the preliminary foundation design recommendations provided by the Geotechnical Office to perform the structural modeling of the foundation system and superstructure. Through this modeling, the Bridge and Structures Office determines and distributes the loads within the structure for all appropriate load cases, factors the loads as appropriate, and sizes the foundations using the foundation nominal resistances and resistance factors provided by the Geotechnical Office. Constructability and construction staging needs would continue to be investigated during this phase. The Bridge and Structures Office would also provide the following feedback to the Geotechnical Office to allow them to check their preliminary foundation design and produce the Final Geotechnical Report for the structure:

- Anticipated foundation loads (including load factors and load groups used).
- Foundation size/diameter and depth required to meet structural needs.
- Foundation details that could affect the geotechnical design of the foundations.
- Size and configuration of deep foundation groups.

Final Foundation Design – This design step results in a formal geotechnical report produced by the Geotechnical Office that provides final geotechnical recommendations for the subject structure. This report includes all geotechnical data obtained at the site, including final boring logs, subsurface profiles, and laboratory test data, all final foundation recommendations, and final constructability recommendations for the structure. At this time, the Geotechnical Office will check their preliminary foundation design in consideration of the structural foundation design results determined by the Bridge and Structures Office, and make modifications to the preliminary foundation design as needed to accommodate the structural design needs provided by the Bridge and Structures Office. It is possible that much of what was included in the preliminary foundation design memorandum may be copied into the final geotechnical report, if no design changes are needed. This report will also be used for publication and distribution to potential bidders.

Final Structural Modeling and PS&E Development – In this phase, the Bridge and Structures Office makes any adjustments needed to their structural model to accommodate any changes made to the geotechnical foundation recommendations as transmitted in the final geotechnical report. From this, the bridge design and final PS&E would be completed.

Note that a similar design process should be used if a consultant or design-builder is performing one or both design functions.

8.3 Data Needed for Foundation Design

The data needed for foundation design shall be as described in the AASHTO LRFD Bridge Design Specifications, Section 10 (most current version). The expected project requirements and subsurface conditions should be analyzed to determine the type and quantity of information to be developed during the geotechnical investigation. During this phase it is necessary to:

- Identify design and constructability requirements (e.g. provide grade separation, transfer loads from bridge superstructure, provide for dry excavation) and their effect on the geotechnical information needed
- Identify performance criteria (e.g. limiting settlements, right of way restrictions, proximity of adjacent structures) and schedule contraints
- Identify areas of concern on site and potential variability of local geology
- Develop likely sequence and phases of construction and their effect on the geotechnical information needed
- Identify engineering analyses to be performed (e.g. bearing capacity, settlement, global stability)
- Identify engineering properties and parameters required for these analyses
- Determine methods to obtain parameters and assess the validity of such methods for the material type and construction methods
- Determine the number of tests/samples needed and appropriate locations for them.

Table 8-1 provides a summary of information needs and testing considerations for foundation design.

Chapter 5 covers the requirements for how the results from the field investigation, the field testing, and the laboratory testing are to be used separately or in combination to establish properties for design. The specific test and field investigation requirements needed for foundation design are described in the following sections.

Found-ation Type	Engineering Evaluations	Required Information for Analyses	Field Testing	Laboratory Testing
Shallow Foundations	• bearing capacity • settlement (magnitude & rate) • shrink/swell of foundation soils (natural soils or embankment fill) • frost heave • scour (for water crossings) • liquefaction • overall slope stability	• subsurface profile (soil, groundwater, rock) • shear strength parameters • compressibility parameters (including consolidation, shrink/swell potential, and elastic modulus) • frost depth • stress history (present and past vertical effective stresses) • depth of seasonal moisture change • unit weights • geologic mapping including orientation and characteristics of rock discontinuities	• SPT (granular soils) • CPT • PMT • dilatometer • rock coring (RQD) • plate load testing • geophysical testing	• 1-D Oedometer tests • soil/rock shear tests • grain size distribution • Atterberg Limits • specific gravity • moisture content • unit weight • organic content • collapse/swell potential tests • intact rock modulus • point load strength test
Driven Pile Foundations	• pile end-bearing • pile skin friction • settlement • down-drag on pile • lateral earth pressures • chemical compatibility of soil and pile • drivability • presence of boulders/ very hard layers • scour (for water crossings) • vibration/heave damage to nearby structures • liquefaction • overall slope stability	• subsurface profile (soil, ground water, rock) • shear strength parameters • horizontal earth pressure coefficients • interface friction parameters (soil and pile) • compressibility parameters • chemical composition of soil/rock (e.g., potential corrosion issues) • unit weights • presence of shrink/swell soils (limits skin friction) • geologic mapping including orientation and characteristics of rock discontinuities	• SPT (granular soils) • pile load test • CPT • PMT • vane shear test • dilatometer • piezometers • rock coring (RQD) • geophysical testing	• soil/rock shear tests • interface friction tests • grain size distribution • 1-D Oedometer tests • pH, resistivity tests • Atterberg Limits • specific gravity • organic content • moisture content • unit weight • collapse/swell potential tests • intact rock modulus • point load strength test
Drilled Shaft Foundations	• shaft end bearing • shaft skin friction • constructability • down-drag on shaft • quality of rock socket • lateral earth pressures • settlement (magnitude & rate) • groundwater seepage/ dewatering/ potential for caving • presence of boulders/ very hard layers • scour (for water crossings) • liquefaction • overall slope stability	• subsurface profile (soil, ground water, rock) • shear strength parameters • interface shear strength friction parameters (soil and shaft) • compressibility parameters • horizontal earth pressure coefficients • chemical composition of soil/rock • unit weights • permeability of water-bearing soils • presence of artesian conditions • presence of shrink/swell soils (limits skin friction) • geologic mapping including orientation and characteristics of rock discontinuities • degradation of soft rock in presence of water and/or air (e.g., rock sockets in shales)	• installation technique test shaft • shaft load test • vane shear test • CPT • SPT (granular soils) • PMT • dilatometer • piezometers • rock coring (RQD) • geophysical testing	• 1-D Oedometer • soil/rock shear tests • grain size distribution • interface friction tests • pH, resistivity tests • permeability tests • Atterberg Limits • specific gravity • moisture content • unit weight • organic content • collapse/swell potential tests • intact rock modulus • point load strength test • slake durability

Summary of Information Needs and Testing Considerations
(Modified After Sabatini, et al., 2002)
Table 8-1

8.3.1 Field Exploration Requirements for Foundations

Subsurface explorations shall be performed to provide the information needed for the design and construction of foundations. The extent of exploration shall be based on variability in the subsurface conditions, structure type, and any project requirements that may affect the foundation design or construction. The exploration program should be extensive enough to reveal the nature and types of soil deposits and/or rock formations encountered, the engineering properties of the soils and/or rocks, the potential for liquefaction, and the ground water conditions. The exploration program should be sufficient to identify and delineate problematic subsurface conditions such as karstic formations, mined out areas, swelling/collapsing soils, existing fill or waste areas, etc.

Borings should be sufficient in number and depth to establish a reliable longitudinal and transverse substrata profile at areas of concern, such as at structure foundation locations, adjacent earthwork locations, and to investigate any adjacent geologic hazards that could affect the structure performance. Requirements for the number and depth of borings presented in the AASHTO LRFD Bridge Design Specifications, Article 10.4.2, should be used. While engineering judgment will need to be applied by a licensed and experienced geotechnical professional to adapt the exploration program to the foundation types and depths needed and to the variability in the subsurface conditions observed, the intent of AASHTO Article 10.4.2 regarding the minimum level of exploration needed should be carried out. Geophysical testing may be used to guide the planning of the subsurface exploration and reduce the requirements for borings. The depth of borings indicated in AASHTO Article 10.4.2 performed before or during design should take into account the potential for changes in the type, size and depth of the planned foundation elements.

AASHTO Article 10.4.2 shall be used as a starting point for determining the locations of borings. The final exploration program should be adjusted based on the variability of the anticipated subsurface conditions as well as the variability observed during the exploration program. If conditions are determined to be variable, the exploration program should be increased relative to the requirements in AASHTO Article 10.4.2 such that the objective of establishing a reliable longitudinal and transverse substrata profile is achieved. If conditions are observed to be homogeneous or otherwise are likely to have minimal impact on the foundation performance, and previous local geotechnical and construction experience has indicated that subsurface conditions are homogeneous or otherwise are likely to have minimal impact on the foundation performance, a reduced exploration program relative to what is specified in AASHTO Article 10.4.2 may be considered. Even the best and most detailed subsurface exploration programs may not identify every important subsurface problem condition if conditions are highly variable. The goal of the subsurface exploration program, however, is to reduce the risk of such problems to an acceptable minimum.

For situations where large diameter rock socketed shafts will be used or where drilled shafts are being installed in formations known to have large boulders, or voids such as in karstic or mined areas, it may be necessary to advance a boring at the location of each shaft.

In a laterally homogeneous area, drilling or advancing a large number of borings may be redundant, since each sample tested would exhibit similar engineering properties. Furthermore, in areas where soil or rock conditions are known to be very favorable to the construction and performance of the foundation type likely to be used (e.g., footings on very dense soil, and groundwater is deep enough to not be a factor), obtaining fewer borings than provided in AASHTO Article 10.4.2 may be justified. In all cases, it is necessary to understand how the design and construction of the geotechnical feature will be affected by the soil and/or rock mass conditions in order to optimize the exploration.

Samples of material encountered shall be taken and preserved for future reference and/or testing. Boring logs shall be prepared in detail sufficient to locate material strata, results of penetration tests, groundwater, any artesian conditions, and where samples were taken. Special attention shall be paid to the detection of narrow, soft seams that may be located at stratum boundaries.

For drilled shaft foundations, it is especially critical that the groundwater regime is well defined at each foundation location. Piezometer data adequate to define the limits and piezometric head in all unconfined, confined, and locally perched groundwater zones should be obtained at each foundation location.

For cut-and-cover tunnels, pipe arches, etc., spacing of investigation points shall be consistent for that required for retaining walls (see Chapter 15), with a minimum of two investigation points spaced adequately to develop a subsurface profile for the entire structure.

8.3.2 Laboratory and Field Testing Requirements for Foundations

General requirements for laboratory and field testing, and their use in the determination of properties for design, are addressed in Chapter 5. In general, for foundation design, laboratory testing should be used to augment the data obtained from the field investigation program, to refine the soil and rock properties selected for design.

Foundation design will typically heavily rely upon the SPT and/or q_c results obtained during the field exploration through correlations to shear strength, compressibility, and the visual descriptions of the soil/rock encountered, especially in non-cohesive soils. The information needed for the assessment of ground water and the hydrogeologic properties needed for foundation design and constructability evaluation is typically obtained from the field exploration through field instrumentation (e.g., piezometers) and in-situ tests (e.g., slug tests, pump tests, etc.). Index tests such as soil gradation, Atterberg limits, water content, and organic content are used to confirm the visual field classification of the soils encountered, but may also be used directly to obtain input parameters for some aspects of foundation design (e.g., soil liquefaction, scour, degree of over-consolidation, and correlation to shear strength or compressibility of cohesive soils). Quantitative or performance laboratory tests conducted on undisturbed soil samples are used to assess shear strength or compressibility of finer grained soils, or to obtain seismic design input parameters such as shear modulus. Site performance data, if available, can also be used to assess design input parameters. Recommendations are provided in Chapter 5 regarding how to make the final selection of design properties based on all of these sources of data.

8.4 Foundation Selection Considerations

Foundation selection considerations to be evaluated include:

- the ability of the foundation type to meet performance requirements (e.g., deformation, bearing resistance, uplift resistance, lateral resistance/deformation) for all limit states, given the soil or rock conditions encountered
- the constructability of the foundation type
- the impact of the foundation installation (in terms of time and space required) on traffic and right-of-way
- the environmental impact of the foundation construction
- the constraints that may impact the foundation installation (e.g., overhead clearance, access, and utilities)
- the impact of the foundation on the performance of adjacent foundations, structures, or utilities, considering both the design of the adjacent foundations, structures, or utilities, and the performance impact the installation of the new foundation will have on these adjacent facilities.
- the cost of the foundation, considering all of the issues listed above.

Spread footings are typically very cost effective, given the right set of conditions. Footings work best in hard or dense soils that have adequate bearing resistance and exhibit tolerable settlement under load. Footings can get rather large in medium dense or stiff soils to keep bearing stresses low enough to minimize settlement, or for structures with tall columns or which otherwise are loaded in a manner that results in large eccentricities at the footing level, or which result in the footing being subjected to uplift loads. Footings are not effective where soil liquefaction can occur at or below the footing level, unless the liquefiable soil is confined, not very thick, and well below the footing level. However, footings may be cost effective if inexpensive soil improvement techniques such as overexcavation, deep dynamic compaction, and stone columns, etc. are feasible. Other factors that affect the desirability of spread footings include the need for a cofferdam and seals when placed below the water table, the need for significant overexcavation of unsuitable soil, the need to place footings deep due to scour and possibly frost action, the need for significant shoring to protect adjacent existing facilities, and inadequate overall stability when placed on slopes that have marginally adequate stability. Footings may not be feasible where expansive or collapsible soils are present near the bearing elevation. Since deformation (service) often controls the feasibility of spread footings, footings may still be feasible and cost effective if the structure the footings support can be designed to tolerate the settlement (e.g., flat slab bridges, bridges with jackable abutments, etc.).

Deep foundations are the best choice when spread footings cannot be founded on competent soils or rock at a reasonable cost. At locations where soil conditions would normally permit the use of spread footings but the potential exists for scour, liquefaction or lateral spreading, deep foundations bearing on suitable materials below such susceptible soils should be used as a protection against these problems. Deep foundations should also be used where an unacceptable amount of spread footing settlement may occur. Deep foundations should be used where right-of-way, space limitations, or other constraints as discussed above would not allow the use of spread footings.

Two general types of deep foundations are typically considered: pile foundations, and drilled shaft foundations. Shaft foundations are most advantageous where very dense intermediate strata must be penetrated to obtain the desired bearing, uplift, or lateral resistance, or where obstructions such as boulders or logs must be penetrated. Shafts may also become cost effective where a single shaft per column can be used in lieu of a pile group with a pile cap, especially when a cofferdam or shoring is required to construct the pile cap. However, shafts may not be desirable where contaminated soils are present, since contaminated soil would be removed, requiring special handling and disposal. Shafts should be used in lieu of piles where deep foundations are needed and pile driving vibrations could cause damage to existing adjacent facilities. Piles may be more cost effective than shafts where pile cap construction is relatively easy, where the depth to the foundation layer is large (e.g., more than 100 feet), or where the pier loads are such that multiple shafts per column, requiring a shaft cap, are needed. The tendency of the upper loose soils to flow, requiring permanent shaft casing, may also be a consideration that could make pile foundations more cost effective. Artesian pressure in the bearing layer could preclude the use of drilled shafts due to the difficulty in keeping enough head inside the shaft during excavation to prevent heave or caving under slurry.

For situations where existing structures must be retrofitted to improve foundation resistance or where limited headroom is available, micro-piles may be the best alternative, and should be considered.

Augercast piles can be very cost effective in certain situations. However, their ability to resist lateral loads is minimal, making them undesirable to support structures where significant lateral loads must be transferred to the foundations. Furthermore, quality assurance of augercast pile integrity and capacity needs further development. Therefore, it is WSDOT policy not to use augercast piles for bridge foundations.

8.5 Overview of LRFD for Foundations

The basic equation for load and resistance factor design (LRFD) states that the loads multiplied by factors to account for uncertainty, ductility, importance, and redundancy must be less than or equal to the available resistance multiplied by factors to account for variability and uncertainty in the resistance per the AASHTO LRFD Bridge Design Specifications. The basic equation, therefore, is as follows:

$$\Sigma\eta_\iota\gamma_i\, Q_i \leq \phi R_n \qquad (8\text{-}1)$$

Where:

η_ι = Factor for ductility, redundancy, and importance of structure
γ_i = Load factor applicable to the i'th load Q_i
Q_i = Load
ϕ = Resistance factor
R_n = Nominal (predicted) resistance

For typical WSDOT practice, η_i should be set equal to 1.0 for use of both minimum and maximum load factors. Foundations shall be proportioned so that the factored resistance is not less than the factored loads.

Figure 8-2 below should be utilized to provide a common basis of understanding for loading locations and directions for substructure design. This figure also indicates the geometric data required for abutment and substructure design. Note that for shaft and some pile foundation designs, the shaft or pile may form the column as well as the foundation element, thereby eliminating the footing element shown in the figure.

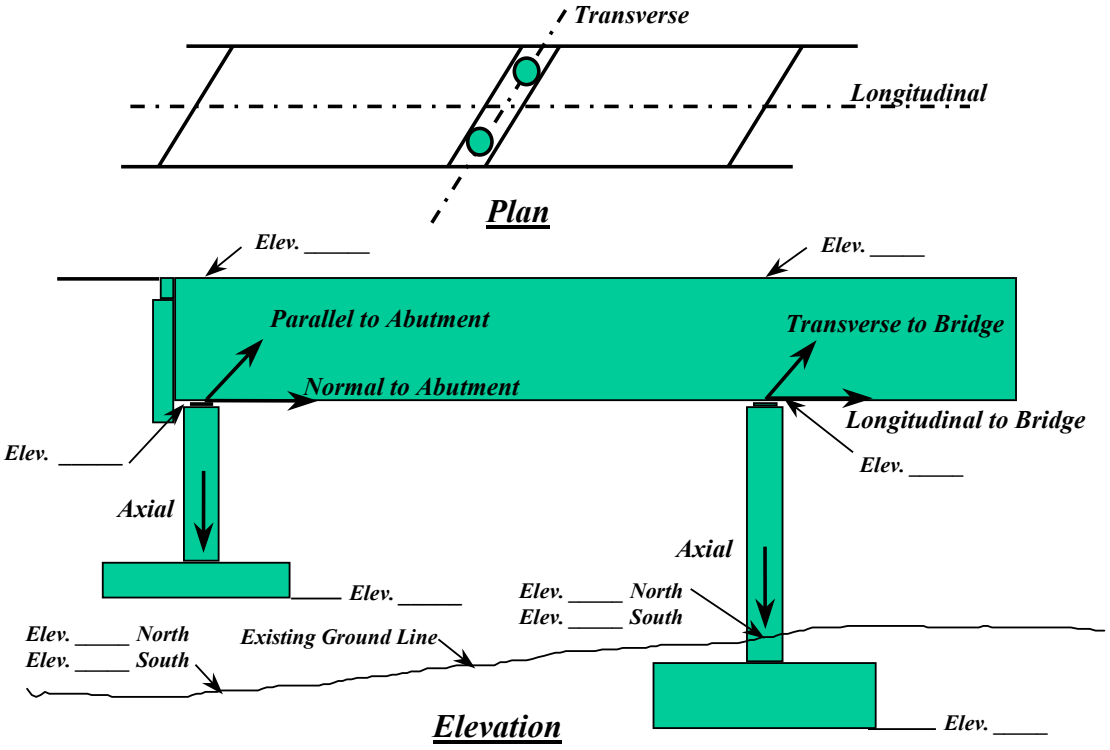

Template for Foundation Site Data and Loading Direction Definitions
Figure 8-2

8.6 LRFD Loads, Load Groups and Limit States to be Considered

The specific loads and load factors to be used for foundation design are as found in AASHTO LRFD Bridge Design Specifications and the *LRFD Bridge Design Manual* (BDM).

8.6.1 Foundation Analysis to Establish Load Distribution for Structure

Once the applicable loads and load groups for design have been established for each limit state, the loads shall be distributed to the various parts of the structure in accordance with Sections 3 and 4 of the AASHTO LRFD Bridge Design Specifications. The distribution of these loads shall consider the deformation characteristics of the soil/rock, foundation, and superstructure. The following process is used to accomplish the load distribution (see LRFD BDM Section 7.2 for more detailed procedures):

1. Establish stiffness values for the structure and the soil surrounding the foundations and behind the abutments.
2. For service and strength limit state calculations, use P-Y curves for deep foundations, or use strain wedge theory, especially in the case of short or

intermediate length shafts (see Section 8.13.2.3.3), to establish soil/rock stiffness values (i.e., springs) necessary for structural design. The bearing resistance at the specified settlement determined for the service limit state, but excluding consolidation settlement, should be used to establish soil stiffness values for spread footings for service and strength limit state calculations. For strength limit state calculations for deep foundations where the lateral load is potentially repetitive in nature (e.g., wind, water, braking forces, etc.), use soil stiffness values derived from P-Y curves using non-degraded soil strength and stiffness parameters. The geotechnical designer provides the soil/rock input parameters to the structural designer to develop these springs and to determine the load distribution using the analysis procedures as specified in LRFD BDM Section 7.2 and Section 4 of the AASHTO LRFD Bridge Design Specifications, applying unfactored loads, to get the load distribution. Two unfactored load distributions for service and strength limit state calculations are developed: one using undegraded stiffness parameters (i.e., maximum stiffness values) to determine the maximum shear and moment in the structure, and another distribution using soil strength and stiffness parameters that have been degraded over time due to repetitive loading to determine the maximum deflections and associated loads that result.

3. For extreme event limit state (seismic) deep foundation calculations, use soil strength and stiffness values before any liquefaction or other time dependent degradation occurs to develop lateral soil stiffness values and determine the unfactored load distribution to the foundation and structure elements as described in Step 2, including the full seismic loading. This analysis using maximum stiffness values for the soil/rock is used by the structural designer to determine the maximum shear and moment in the structure. The structural designer then completes another unfactored analysis using soil parameters degraded by liquefaction effects to get another load distribution, again using the full seismic loading, to determine the maximum deflections and associated loads that result. For footing foundations, a similar process is followed, except the vertical soil springs are bracketed to evaluate both a soft response and a stiff response. See Section 6.4.2.7 for additional information on this design issue.
4. Once the load distributions have been determined, the loads are factored to analyze the various components of the foundations and structure for each limit state. The structural and geotechnical resistance are factored as appropriate, but in all cases, the lateral soil resistance for deep foundations remain unfactored (i.e., a resistance factor of 1.0).

Throughout all of the analysis procedures discussed above to develop load distributions, the soil parameters and stiffness values are unfactored. The geotechnical designer must develop a best estimate for these parameters during the modeling. Use of intentionally conservative values could result in unconservative estimates of structure loads, shears, and moments or inaccurate estimates of deflections.

See the AASHTO LRFD Bridge Design Specifications, Article 10.6 for the development of elastic settlement/bearing resistance of footings for static analyses and Chapter 6 for soil/rock stiffness determination for spread footings subjected to seismic loads. See Sections 8.12.2.3 and 8.13.2.3.3, and related AASHTO LRFD Bridge Design Specifications for the development of lateral soil stiffness values for deep foundations.

8.6.2 Downdrag Loads

Regarding downdrag loads, possible development of downdrag on piles, shafts, or other deep foundations shall be evaluated where:

- Sites are underlain by compressible material such as clays, silts or organic soils,
- Fill will be or has recently been placed adjacent to the piles or shafts, such as is frequently the case for bridge approach fills,
- The groundwater is substantially lowered, or
- Liquefaction of loose sandy soil can occur.

Downdrag loads (DD) shall be determined, factored (using load factors), and applied as specified in the AASHTO LRFD Bridge Design Specifications, Section 3. The load factors for DD loads provided in Table 3.4.1-2 of the AASHTO LRFD Bridge Design Specifications shall be used for the strength limit state. This table does not address the situation in which the soil contributing to downdrag in the strength limit state consists of sandy soil, the situation in which a significant portion of the soil profile consists of sandy layers, nor the situation in which the CPT is used to estimate DD and the pile bearing resistance. Therefore, the portion of Table 3.4.1-2 in the AASHTO LRFD Bridge Design Specifications that addresses downdrag loads has been augmented to address these situations as shown in Table 8-3.

Type of Load, Foundation Type, and Method Used to Calculate Downdrag		Load Factor	
		Maximum	Minimum
DD: Downdrag	Piles, α Tomlinson Method	1.4	0.25
	Piles, λ Method	1.05	0.30
	Piles, Nordlund Method, or Nordlund and λ Method	1.1	0.35
	Piles, CPT Method	1.1	0.40
	Drilled shafts, O'Neill and Reese (1999) Method	1.25	0.35

Strength Limit State Downdrag Load Factors
Table 8-3

For the Service and Extreme Event Limit states, a downdrag load factor of 1.0 should be used.

8.6.3 Uplift Loads due to Expansive Soils

In general, uplift loads on foundations due to expansive soils shall be avoided through removal of the expansive soil. If removal is not possible, deep foundations such as driven piles or shafts shall be placed into stable soil. Spread footings shall not be used in this situation.

Deep foundations penetrating expansive soil shall extend to a depth into moisture-stable soils sufficient to provide adequate anchorage to resist uplift. Sufficient clearance should be provided between the ground surface and underside of caps or beams connecting piles or shafts to preclude the application of uplift loads at the pile/cap connection due to swelling ground conditions.

Evaluation of potential uplift loads on piles extending through expansive soils requires evaluation of the swell potential of the soil and the extent of the soil strata that may affect the pile. One reasonably reliable method for identifying swell potential is

presented in Chapter 5. Alternatively, ASTM D4829 may be used to evaluate swell potential. The thickness of the potentially expansive stratum must be identified by:

- Examination of soil samples from borings for the presence of jointing, slickensiding, or a blocky structure and for changes in color, and
- Laboratory testing for determination of soil moisture content profiles.

8.6.4 Soil Loads on Buried Structures

For tunnels, culverts and pipe arches, the soil loads to be used for design shall be as specified in Sections 3 and 12 of the AASHTO LRFD Bridge Design Specifications.

8.6.5 Service Limit States

Foundation design at the service limit state shall include:

- Settlements
- Horizontal movements
- Overall stability, and
- Scour at the design flood

Consideration of foundation movements shall be based upon structure tolerance to total and differential movements, rideability and economy. Foundation movements shall include all movement from settlement, horizontal movement, and rotation.

In bridges where the superstructure and substructure are not integrated, settlement corrections can be made by jacking and shimming bearings. Article 2.5.2.3 of the AASHTO LRFD Bridge Design Specifications requires jacking provisions for these bridges. The cost of limiting foundation movements should be compared with the cost of designing the superstructure so that it can tolerate larger movements or of correcting the consequences of movements through maintenance to determine minimum lifetime cost. WSDOT may establish criteria that are more stringent.

The design flood for scour is defined in Article 2.6.4.4.2 and is specified in Article 3.7.5 of the AASHTO LRFD Bridge Design Specifications as applicable at the service limit state.

8.6.5.1 Tolerable Movements

Foundation settlement, horizontal movement, and rotation of foundations shall be investigated using all applicable loads in the Service I Load Combination specified in Table 3.4.1-1 of the AASHTO LRFD Bridge Design Specifications. Transient loads may be omitted from settlement analyses for foundations bearing on or in cohesive soil deposits that are subject to time-dependent consolidation settlements.

Foundation movement criteria shall be consistent with the function and type of structure, anticipated service life, and consequences of unacceptable movements on structure performance. Foundation movement shall include vertical, horizontal and rotational movements. The tolerable movement criteria shall be established by either empirical procedures or structural analyses or by consideration of both.

Experience has shown that bridges can and often do accommodate more movement and/or rotation than traditionally allowed or anticipated in design. Creep, relaxation, and redistribution of force effects accommodate these movements. Some studies have been made to synthesize apparent response. These studies indicate that angular

distortions between adjacent foundations greater than 0.008 (RAD) in simple spans and 0.004 (RAD) in continuous spans should not be permitted in settlement criteria (Moulton et al. 1985; DiMillio, 1982; Barker et al. 1991). Other angular distortion limits may be appropriate after consideration of:

- Cost of mitigation through larger foundations, realignment or surcharge,
- Rideability,
- Aesthetics, and,
- Safety.

In addition to the requirements for serviceability provided above, the following criteria (Tables 8-4, 8-*5*, and 8-6) shall be used to establish acceptable settlement criteria:

Total Settlement at Pier or Abutment	Differential Settlement Over 100 Feet within Pier or Abutment, and Differential Settlement Between Piers	Action
$\Delta H \leq 1$ in	$\Delta H_{100} \leq 0.75$ in	Design and Construct
1 in $< \Delta H \leq 4$ in	0.75 in $< \Delta H_{100} \leq 3$ in	Ensure structure can tolerate settlement
$\Delta H > 4$ in	$\Delta H_{100} > 3$ in	Obtain Approval[1] prior to proceeding with design and Construction

[1]Approval of WSDOT State Geotechnical Engineer and WSDOT Bridge Design Engineer required.

Settlement Criteria for Bridges
Table 8-4

Total Settlement	Differential Settlement Over 100 Feet	Action
$\Delta H \leq 1$ in	$\Delta H_{100} \leq 0.75$ in	Design and Construct
1 in $< \Delta H \leq 2.5$ in	0.75 in $< \Delta H_{100} \leq 2$ in	Ensure structure can tolerate settlement
$\Delta H > 2.5$ in	$\Delta H_{100} > 2$ in	Obtain Approval[1] prior to proceeding with design and Construction

[1]Approval of WSDOT State Geotechnical Engineer and WSDOT Bridge Design Engineer required.

Settlement Criteria for Cut and Cover Tunnels, Concrete Culverts (including box culverts), and Concrete Pipe Arches
Table 8-5

Total Settlement	Differential Settlement Over 100 Feet	Action
$\Delta H \leq 2$ in	$\Delta H_{100} \leq 1.5$ in	Design and Construct
2 in $< \Delta H \leq 6$ in	1.5 in $< \Delta H_{100} \leq 5$ in	Ensure structure can tolerate settlement
$\Delta H > 6$ in	$\Delta H_{100} > 5$ in	Obtain Approval[1] prior to proceeding with design and Construction

[1]Approval of WSDOT State Geotechnical Engineer and WSDOT Bridge Design Engineer required.

Settlement Criteria for Flexible Culverts
Table 8-6

Rotation movements should be evaluated at the top of the substructure unit (in plan location) and at the deck elevation.

The horizontal displacement of pile and shaft foundations shall be estimated using procedures that consider soil-structure interaction (see Section 8.12.2.3). Horizontal movement criteria should be established at the top of the foundation based on the tolerance of the structure to lateral movement, with consideration of the column length and stiffness. Tolerance of the superstructure to lateral movement will depend on bridge seat widths, bearing type(s), structure type, and load distribution effects.

8.6.5.2 Overall Stability

The evaluation of overall stability of earth slopes with or without a foundation unit shall be investigated at the service limit state as specified in Article 11.6.2.3 of the AASHTO LRFD Bridge Design Specifications. Overall stability should be evaluated using limiting equilibrium methods such as modified Bishop, Janbu, Spencer, or other widely accepted slope stability analysis methods. Article 11.6.2.3 recommends that overall stability be evaluated at the Service I limit state (i.e., a load factor of 1.0) and a resistance factor, ϕ_{os} of 0.65 for slopes which support a structural element. For resistance factors for overall stability of slopes that contain a retaining wall, see Chapter 15. Also see Chapter 7 for additional information and requirements regarding slope stability analysis and acceptable safety factors and resistance factors.

Available slope stability programs produce a single factor of safety, FS. Overall slope stability shall be checked to insure that foundations designed for a maximum bearing stress equal to the specified service limit state bearing resistance will not cause the slope stability factor of safety to fall below 1.5. This practice will essentially produce the same result as specified in Article 11.6.2.3 of the AASHTO LRFD Bridge Design Specifications. The foundation loads should be as specified for the Service I limit state for this analysis. If the foundation is located on the slope such that the foundation load contributes to slope instability, the designer shall establish a maximum footing load that is acceptable for maintaining overall slope stability for Service, and Extreme Event limit states (see Figure 8-3 for example). If the foundation is located on the slope such that the foundation load increases slope stability, overall stability of the slope shall be evaluated ignoring the effect of the footing on slope stability, or the foundation load shall be included in the slope stability analysis and the foundation designed to resist the lateral loads imposed by the slope.

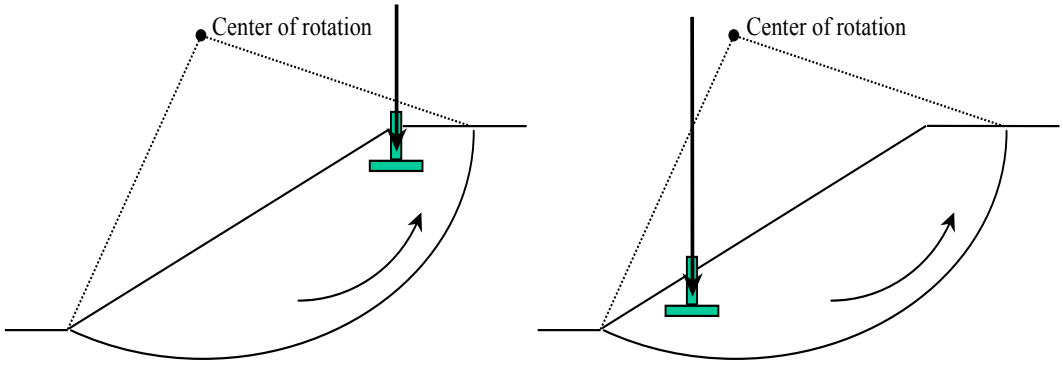

**Example Where Footing Contributes to Instability of Slope (Left Figure)
VS. Example Where Footing Contributes to Stability of Slope (Right Figure)**
Figure 8-3

If the slope is found to not be adequately stable, the slope shall be stabilized so that it achieves the required level of safety, or the structure foundation and the structure itself shall be designed to resist the additional load. Loads on foundations due to forces caused by slope instability shall be determined in accordance with Liang (2010) or Vessely, et al. (2007) and Yamasaki, et al. (2013). The load on the deep foundation unit and/or structure shall be determined such that the required level of safety for the slope is achieved. The required level of safety for slope is an FS of 1.5 (or resistance factor of 0.65) for slope instability that can impact a structure, per the AASHTO LRFD Bridge Design Specifications, Articles 10.5.2.3 and 11.6.2.3, designed at the service limit state. For the Extreme Event Limit State, the required minimum level of safety is a FS of 1.1 (resistance factor of 0.9).

8.6.5.3 Abutment Transitions

Vertical and horizontal movements caused by embankment loads behind bridge abutments shall be investigated. Settlement of foundation soils induced by embankment loads can result in excessive movements of substructure elements. Both short and long term settlement potential should be considered.

Settlement of improperly placed or compacted backfill behind abutments can cause poor rideability and a possibly dangerous bump at the end of the bridge. Guidance for proper detailing and material requirements for abutment backfill is provided in Samtani and Nowatzki (2006) and should be followed.

Lateral earth pressure behind and/or lateral squeeze below abutments can also contribute to lateral movement of abutments and should be investigated, if applicable.

In addition to the considerations for addressing the transition between the bridge and the abutment fill provided above, an approach slab shall be provided at the end of each bridge for WSDOT projects, and shall be the same width as the bridge deck. However, the slab may be deleted under certain conditions as described herein and as described in *Design Manual* M22-01, Chapter 720. If approach slabs are to be deleted, a geotechnical and structural evaluation is required. The geotechnical and structural evaluation shall consider, as a minimum, the criteria described below.

1. Approach slabs may be deleted for geotechnical reasons if the following geotechnical considerations are met:
   - If settlements are excessive, resulting in the angular distortion of the slab to be great enough to become a safety problem for motorists, with excessive defined as a differential settlement between the bridge and the approach fill of 8 inches or more, or,
   - If creep settlement of the approach fill will be less than 0.5 inch, and the amount of new fill placed at the approach is less than 20 feet, or
   - If approach fill heights are less than 8 feet, or
   - If more than 2 inches of differential settlement could occur between the centerline and shoulder
2. Other issues such as design speed, average daily traffic (ADT) or accommodation of certain bridge structure details may supersede the geotechnical reasons for deleting the approach slabs.

8.6.6 Strength Limit States

Design of foundations at strength limit states shall include evaluation of the nominal geotechnical and structural resistances of the foundation elements as specified in the AASHTO LRFD Bridge Design Specifications Article 10.5.

8.6.7 Extreme Event Limit States

Foundations shall be designed for extreme events as applicable in accordance with the AASHTO LRFD Bridge Design Specifications.

8.7 Resistance Factors for Foundation Design – Design Parameters

The load and resistance factors provided herein result from a combination of design model uncertainty, soil/rock property uncertainty, and unknown uncertainty assumed by the previous allowable stress design and load factor design approach included in previous AASHTO design specifications. Therefore, the load and resistance factors account for soil/rock property uncertainty in addition to other uncertainties.

It should be assumed that the characteristic soil/rock properties to be used in conjunction with the load and resistance factors provided herein that have been calibrated using reliability theory (see Allen, 2005) are average values obtained from laboratory test results or from correlated field in-situ test results. It should be noted that use of lower bound soil/rock properties could result in overly conservative foundation designs in such cases. However, depending on the availability of soil or rock property data and the variability of the geologic strata under consideration, it may not be possible to reliably estimate the average value of the properties needed for design. In such cases, the geotechnical designer may have no choice but to use a more conservative selection of design parameters to mitigate the additional risks created by potential variability or the paucity of relevant data. Regarding the extent of subsurface characterization and the number of soil/rock property tests required to justify use of the load and resistance factors provided herein, see Chapter 5. For those load and resistance factors determined primarily from calibration by fitting to allowable stress design, this property selection issue is not relevant, and property selection should be based on past practice. For information regarding the derivation of load and resistance factors for foundations, (see Allen, 2005).

8.8 Resistance Factors for Foundation Design – Service Limit States

Resistance factors for the service limit states shall be taken as specified in the AASHTO LRFD Bridge Design Specifications Article 10.5 (most current version).

8.9 Resistance Factors for Foundation Design – Strength Limit States

Resistance factors for the strength limit states for foundations shall be taken as specified in the AASHTO LRFD Bridge Design Specifications Article 10.5 (most current version). Regionally specific values may be used in lieu of the specified resistance factors, but should be determined based on substantial statistical data combined with calibration or substantial successful experience to justify higher values. Smaller resistance factors should be used if site or material variability is anticipated to be unusually high or if design assumptions are required that increase design uncertainty that have not been mitigated through conservative selection of design parameters.

Exceptions with regard to the resistance factors provided in the most current version of AASHTO for the strength limit state are as follows:

- For driven pile foundations, if the WSDOT driving formula is used for pile driving construction control, the resistance factor φ_{dyn} shall be equal to 0.55 (end of driving conditions only). This resistance factor does not apply to beginning of redrive conditions. See Allen (2005b and 2007) for details on the derivation of this resistance factor.
- For driven pile foundations, when using Wave Equation analysis to estimate pile bearing resistance and establish driving criteria, a resistance factor of 0.50 may be used if the hammer performance is field verified. Field verification of hammer performance includes direct measurement of hammer stroke or ram kinetic energy (e.g., ram velocity measurement). The wave equation may be used for either end of drive or beginning of redrive pile bearing resistance estimation.
- For drilled shaft foundations, the requirements in Appendix 8-B shall be met. This appendix essentially provides an update to the AASHTO LRFD drilled shaft design specifications approved by the AASHTO Bridge Subcommittee in June 2013. These new specifications shall be used until the final drilled shaft AASHTO specifications are published in the next edition of the AASHTO LRFD Bridge Design Specifications.

All other resistance factor considerations and limitations provided in the AASHTO LRFD Bridge Design Specifications Article 10.5 shall be considered applicable to WSDOT design practice.

8.10 Resistance Factors for Foundation Design – Extreme Event Limit States

Design of foundations at extreme event limit states shall be consistent with the expectation that structure collapse is prevented and that life safety is protected.

8.10.1 Scour

The resistance factors and their application shall be as specified in the AASHTO LRFD Bridge Design Specifications, Article 10.5.

8.10.2 Other Extreme Event Limit States

Resistance factors for extreme event limit states, including the design of foundations to resist earthquake, ice, vehicle or vessel impact loads, shall be taken as 1.0, with the exception of bearing resistance of footing foundations. Since the load factor used for the seismic lateral earth pressure for EQ is currently 1.0, to obtain the same level of safety obtained from the AASHTO Standard Specification design requirements for sliding and bearing, a resistance factor of slightly less than 1.0 is required. For bearing resistance during seismic loading, a resistance factor of 0.90 should be used. For uplift resistance of piles and shafts, the resistance factor shall be taken as 0.80 or less, to account for the difference between compression skin friction and tension skin friction.

Regarding overall stability of slopes that can affect structures, a resistance factor of 0.9, which is equivalent to a factor of safety of 1.1, should in general be used for the extreme event limit state. Section 6.4.3 and Chapter 7 provide additional information and requirements regarding seismic stability of slopes.

8.11 Spread Footing Design

Figure 8-4 provides a flowchart that illustrates the design process, and interaction required between structural and geotechnical engineers, needed to complete a spread footing design. ST denotes steps usually completed by the Structural Designer, while GT denotes those steps normally completed by the geotechnical designer.

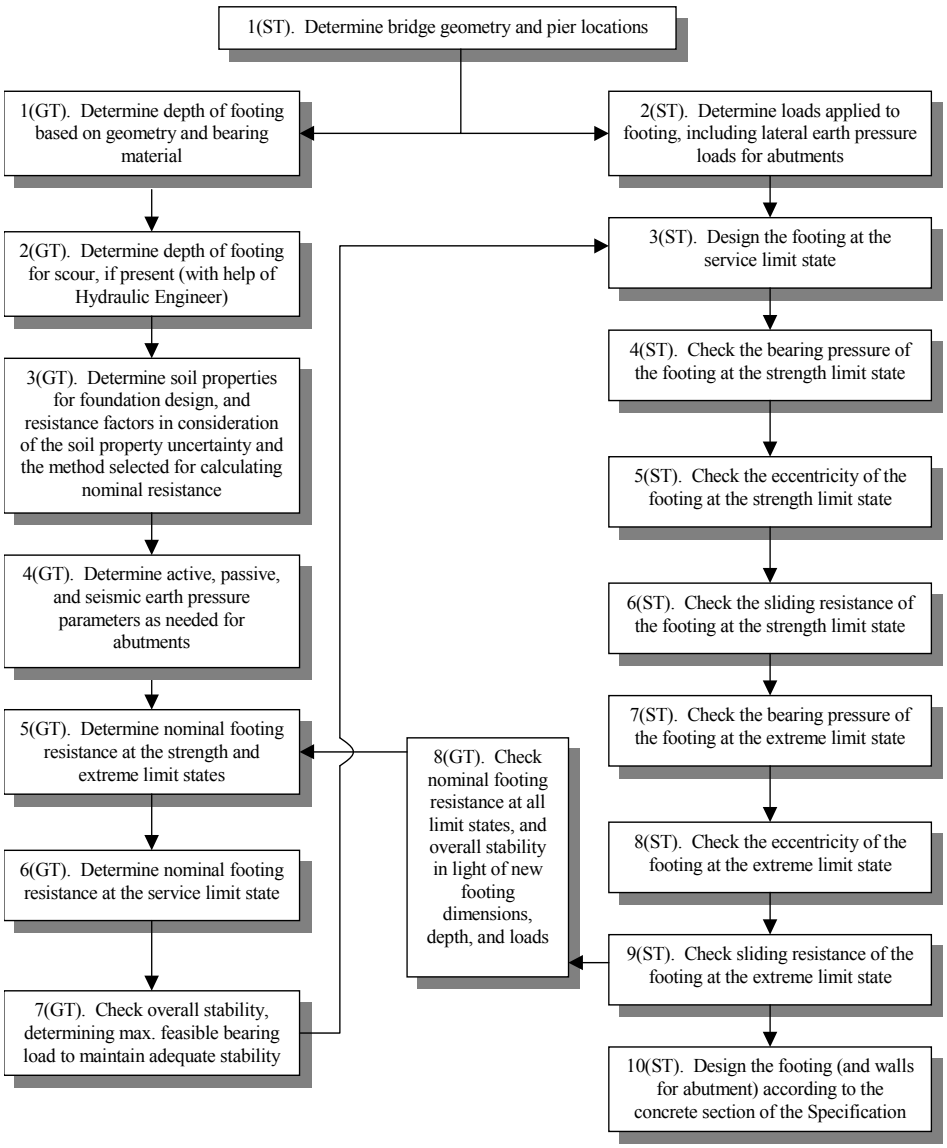

Flowchart for LRFD Spread Footing Design
Figure 8-4

8.11.1 Loads and Load Factor Application to Footing Design

Figures 8-5 and 8-6 provide definitions and locations of the forces and moments that act on structural footings. Note that the eccentricity used to calculate the bearing stress in geotechnical practice typically is referenced to the centerline of the footing, whereas the eccentricity used to evaluate overturning typically is referenced to point O at the toe of the footing. It is important to not change from maximum to minimum load factors in consideration of the force location relative to the reference point used (centerline of the footing, or point "O" at the toe of the footing), as doing so will cause basic statics to no longer apply, and one will not get the same resultant location when the moments are summed at different reference points. The AASHTO LRFD Bridge design Specifications indicate that the moments should be summed about the center of the footing. Table 8-7 identifies when to use maximum or minimum load factors for the various modes of failure for the footing (bearing, overturning, and sliding) for each force, for the strength limit state.

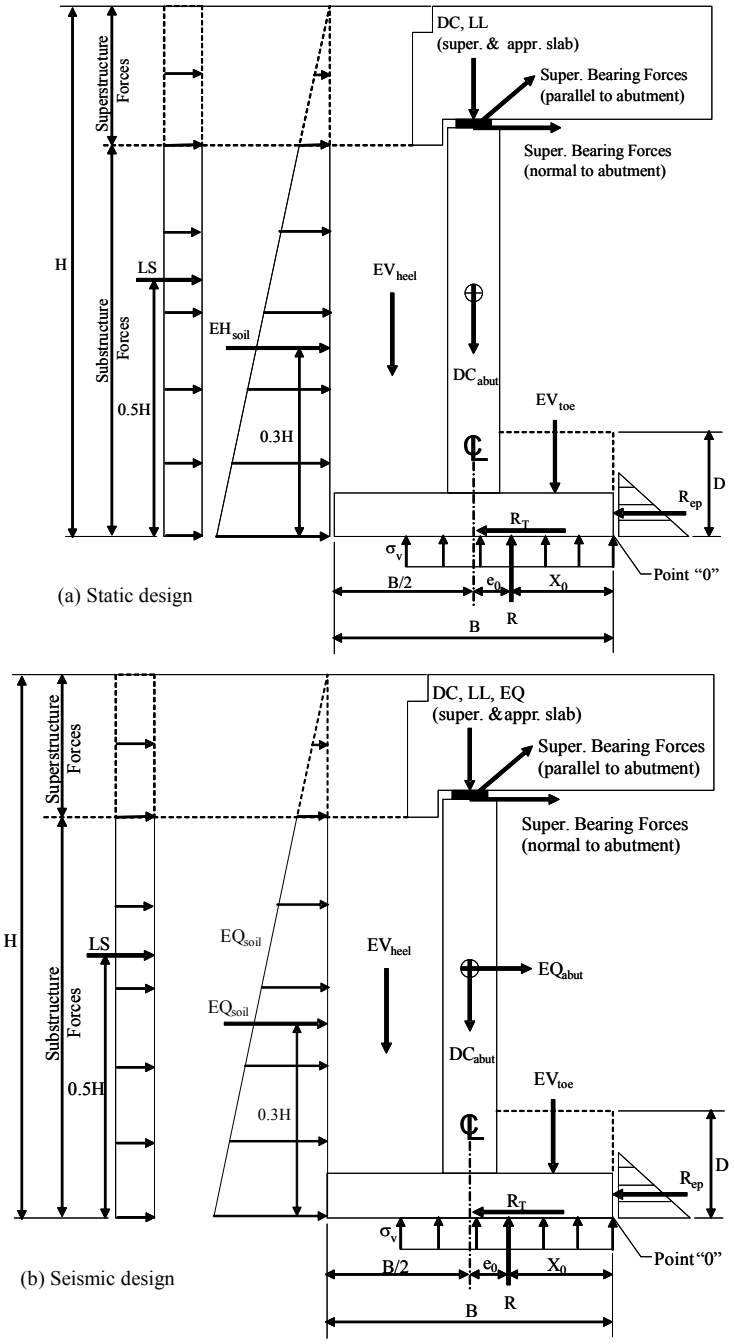

Definition and location of forces for stub abutments
Figure 8-5

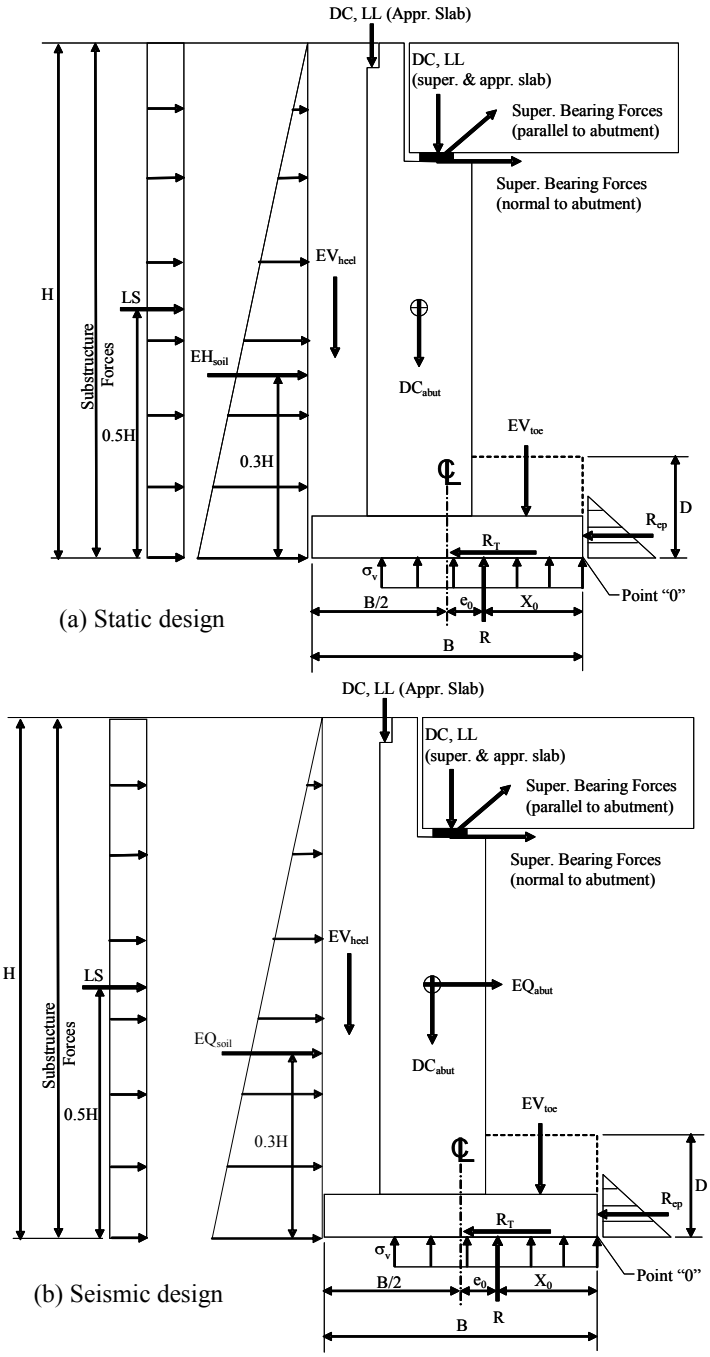

Definition and location of forces for L-abutments and interior footings
Figure 8-6

The variables shown in Figures 8-5 and 8-6 are defined as follows:

DC, LL, EQ = vertical structural loads applied to footing/wall (dead load, live load, EQ load, respectively)
DC_{abut} = structure load due to weight of abutment
EQ_{abut} = abutment inertial force due to earthquake loading
EV_{heel} = vertical soil load on wall heel
EV_{toe} = vertical soil load on wall toe
EH_{soil} = lateral load due to active or at rest earth pressure behind abutment
LS = lateral earth pressure load due to live load
EQ_{soil} = lateral load due to combined effect of active or at rest earth pressure plus seismic earth pressure behind abutment
R_{ep} = ultimate soil passive resistance (note: height of pressure distribution triangle is determined by the geotechnical engineer and is project specific)
$R\tau$ = soil shear resistance along footing base at soil-concrete interface
σ_v = resultant vertical bearing stress at base of footing
R = resultant force at base of footing
e_o = eccentricity calculated about point O (toe of footing)
X_o = distance to resultant R from wall toe (point O)
B = footing width
H = total height of abutment plus superstructure thickness

	Load Factor		
Load	**Sliding**	**Overturning, e_o**	**Bearing Stress (e_c, σ_v)**
DC, DC_{abut}	Use min. load factor	Use min. load factor	Use max. load factor
LL, LS	Use transient load factor (e.g., LL)	Use transient load factor (e.g., LL)	Use transient load factor (e.g., LL)
EV_{heel}, EV_{toe}	Use min. load factor	Use min. load factor	Use max. load factor
EH_{soil}	Use max. load factor	Use max. load factor	Use max. load factor

Selection of Maximum or Minimum Spread Footing Foundation Load Factors for Various Modes of Failure for the Strength Limit State
Table 8-7

8.11.2 Footing Foundation Design

Geotechnical design of footings, and all related considerations, shall be conducted as specified in the AASHTO LRFD Bridge Design Specifications Article 10.6 (most current version), except as specified in following paragraphs and sections.

8.11.2.1 Footing Bearing Depth

For footings on slopes, such as at bridge abutments, the footings should be located as shown in the LRFD BDM Section 7.7.1. The footing should also be located to meet the minimum cover requirements provided in LRFD BDM Section 7.7.1.

8.11.2.2 Nearby Structures

Where foundations are placed adjacent to existing structures, the influence of the existing structure on the behavior of the foundation and the effect of the foundation on the existing structures shall be investigated. Issues to be investigated include, but are not limit to, settlement of the existing structure due to the stress increase caused by the new footing, decreased overall stability due to the additional load created by the new footing, and the effect on the existing structure of excavation, shoring, and/or dewatering to construct the new foundation.

8.11.2.3 Service Limit State Design of Footings

Footing foundations shall be designed at the service limit state to meet the tolerable movements for the structure in accordance with Section 8.6.5.1. The nominal unit bearing resistance at the service limit state, q_{serve}, shall be equal to or less than the maximum bearing stress that that results in settlement that meets the tolerable movement criteria for the structure in Section 8.6.5.1, calculated in accordance with the AASHTO LRFD Bridge Design Specifications, and shall also be less than the maximum bearing stress that meets overall stability requirements.

Other factors that may affect settlement, e.g., embankment loading and lateral and/or eccentric loading, and for footings on granular soils, vibration loading from dynamic live loads should also be considered, where appropriate. For guidance regarding settlement due to vibrations, see Lam and Martin (1986) or Kavazanjian, et al., (1997).

8.11.2.3.1 Settlement of Footings on Cohesionless Soils

Based on experience (see also Kimmerling, 2002), the Hough method tends to overestimate settlement of dense sands, and underestimate settlement of very loose silty sands and silts. Kimmerling (2002) reports the results of full scale studies where on average the Hough Method (Hough, 1959) overestimated settlement by an average factor of 1.8 to 2.0, though some of the specific cases were close to 1.0. This does not mean that estimated settlements by this method can be reduced by a factor of 2.0. However, based on successful WSDOT experience, for footings on sands and gravels with $N1_{60}$ of 20 blows/ft or more, or sands and gravels that are otherwise known to be overconsolidated (e.g., sands subjected to preloading or deep compaction), reduction of the estimated Hough settlement by up to a factor of 1.5 may be considered, provided the geotechnical designer has not used aggressive soil parameters to account for the Hough method's observed conservatism. The settlement characteristics of cohesive soils that exhibit plasticity should be investigated using undisturbed samples and laboratory consolidation tests as prescribed in the AASHTO LRFD Bridge Design Specifications.

8.11.2.3.2 Settlement of Footings on Rock

For footings bearing on fair to very good rock, according to the Geomechanics Classification system, as defined in Chapter 5, and designed in accordance with the provisions of this section, elastic settlements may generally be assumed to be less than 0.5 inches.

8.11.2.3.3 Bearing Resistance at the Service Limit State Using Presumptive Values

Regarding presumptive bearing resistance values for footings on rock, bearing resistance on rock shall be determined using empirical correlation the Geomechanic Rock Mass Rating System, RMR, as specified in Chapter 5.

8.11.2.4 Strength Limit State Design of Footings

The design of spread footings at the strength limit state shall address the following limit states:

- Nominal bearing resistance, considering the soil or rock at final grade, and considering scour as specified in the AASHTO LRFD Bridge Design Specifications Section 10:
- Overturning or excessive loss of contact; and
- Sliding at the base of footing.

The LRFD Bridge Design Manual allows footings to be inclined on slopes of up to 6H:1V. Footings with inclined bases steeper than this should be avoided wherever possible, using stepped horizontal footings instead. The maximum feasible slope of stepped footing foundations is controlled by the maximum acceptable stable slope for the soil in which the footing is placed. Where use of an inclined footing base must be used, the nominal bearing resistance determined in accordance with the provisions herein should be further reduced using accepted corrections for inclined footing bases in Munfakh, et al (2001).

8.11.2.4.1 Theoretical Estimation of Bearing Resistance

The footing bearing resistance equations provided in the AASHTO LRFD Bridge Design Specifications have no theoretical limit on the bearing resistance they predict. However, WSDOT limits the nominal bearing resistance for strength and extreme event limit states to 120 KSF on soil. Values greater than 120 KSF should not be used for foundation design in soil.

8.11.2.4.2 Plate Load Tests for Determination of Bearing Resistance in Soil

The nominal bearing resistance may be determined by plate load tests, provided that adequate subsurface explorations have been made to determine the soil profile below the foundation. The nominal bearing resistance determined from a plate load test may be extrapolated to adjacent footings where the subsurface profile is confirmed by subsurface exploration to be similar.

Plate load tests have a limited depth of influence and furthermore may not disclose the potential for long-term consolidation of foundation soils. Scale effects shall be addressed when extrapolating the results to performance of full scale footings. Extrapolation of the plate load test data to a full scale footing should be based on the design procedures provided herein for settlement (service limit state) and bearing resistance (strength and extreme event limit state), with consideration to the effect of the stratification (i.e., layer thicknesses, depths, and properties). Plate load test results should be applied only within a sub-area of the project site for which the subsurface conditions (i.e., stratification, geologic history, properties) are relatively uniform.

8.11.2.4.3 Bearing Resistance of Footings on Rock

For design of bearing of footings on rock, the competency of the rock mass should be verified using the procedures for RMR rating in Chapter 5.

8.11.2.5 Extreme Event Limit State Design of Footings

Footings shall not be located on or within liquefiable soil. Footings may be located on liquefiable soils that have been improved through densification or other means so that they do not liquefy. Footings may also be located above liquefiable soil in a non-liquefiable layer if the footing is designed to meet all Extreme Event limit states. In this case, liquefied soil parameters shall be used for the analysis (see Chapter 6). The footing shall be stable against an overall stability failure of the soil (see Section 8.6.5.2) and lateral spreading resulting from the liquefaction (see Chapter 6).

Footings located above liquefiable soil but within a non-liquefiable layer shall be designed to meet the bearing resistance criteria established for the structure for the Extreme Event Limit State. The bearing resistance of a footing located above liquefiable soils shall be determined considering the potential for a punching shear condition to develop, and shall also be evaluated using a two layer bearing resistance calculation conducted in accordance with the AASHTO LRFD Bridge Design Specifications Section 10.6, assuming the soil to be in a liquefied condition. Settlement of the liquefiable zone shall also be evaluated to determine if the extreme event limit state criteria for the structure the footing is supporting are met. Settlement due to liquefaction shall be evaluated as specified in Section 6.4.2.4.

For footings, whether on soil or on rock, the eccentricity of loading at the extreme limit state shall not exceed one-third (0.33) of the corresponding footing dimension, B or L, for $\gamma_{EQ} = 0.0$ and shall not exceed four-tenths (0.40) of the corresponding footing dimension, B or L, for $\gamma_{EQ} = 1.0$. If live loads act to reduce the eccentricity for the Extreme Event I limit state, γ_{EQ} shall be taken as 0.0.

8.12 Driven Pile Foundation Design

Figure 8-7 provides a flowchart that illustrates the design process, and interaction required between structural and geotechnical engineers, needed to complete a driven pile foundation design. ST denotes steps usually completed by the Structural Designer, while GT denotes those steps normally completed by the geotechnical designer.

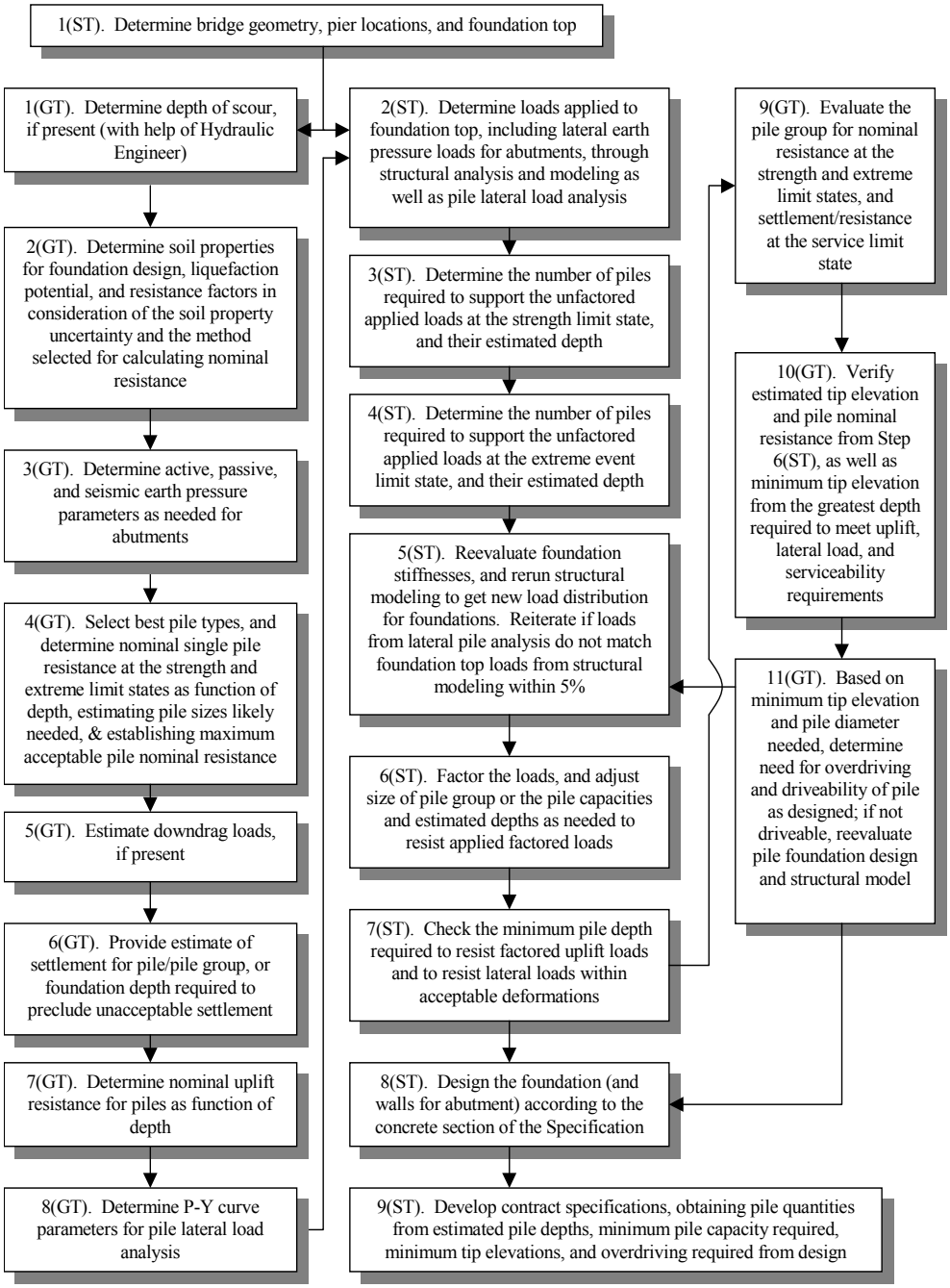

Design Flowchart for Pile Foundation Design
Figure 8-7

8.12.1 Loads and Load Factor Application to Driven Pile Design

Figures 8-8 and 8-9 provide definitions and typical locations of the forces and moments that act on deep foundations such as driven piles. Table 8-8 identifies when to use maximum or minimum load factors for the various modes of failure for the pile (bearing, uplift, and lateral loading) for each force, for the strength limit state.

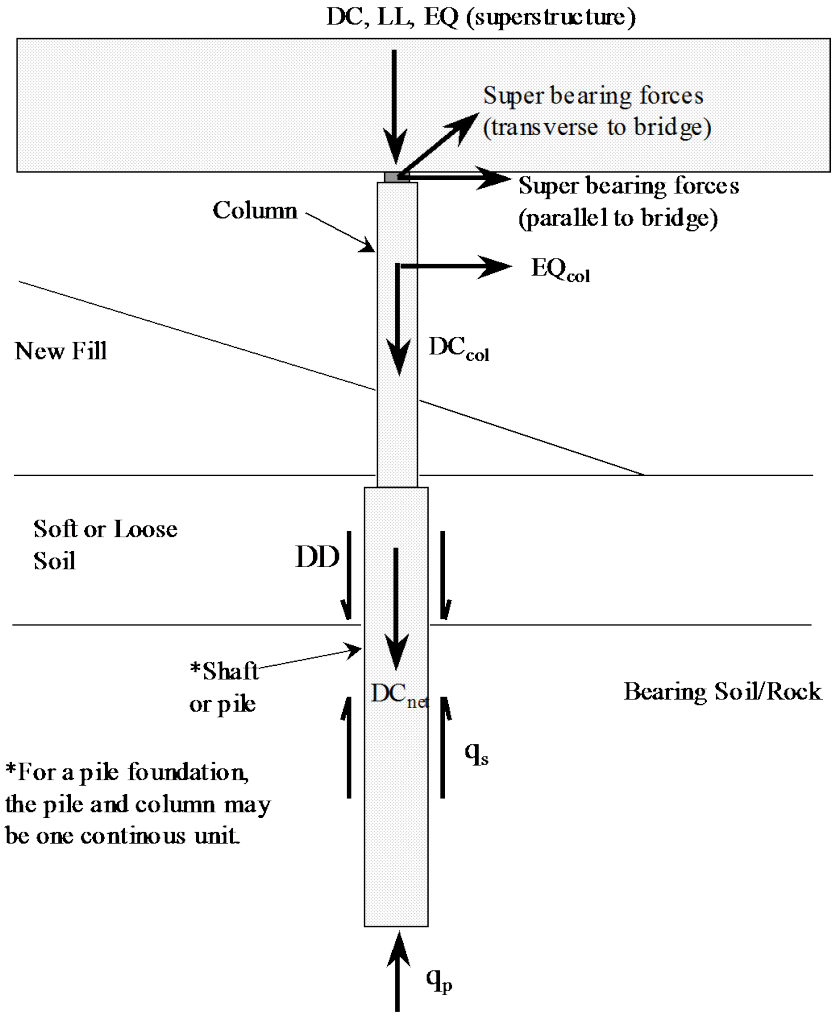

Definition and Location of Forces for Integral Shaft Column or Pile Bent
Figure 8-8

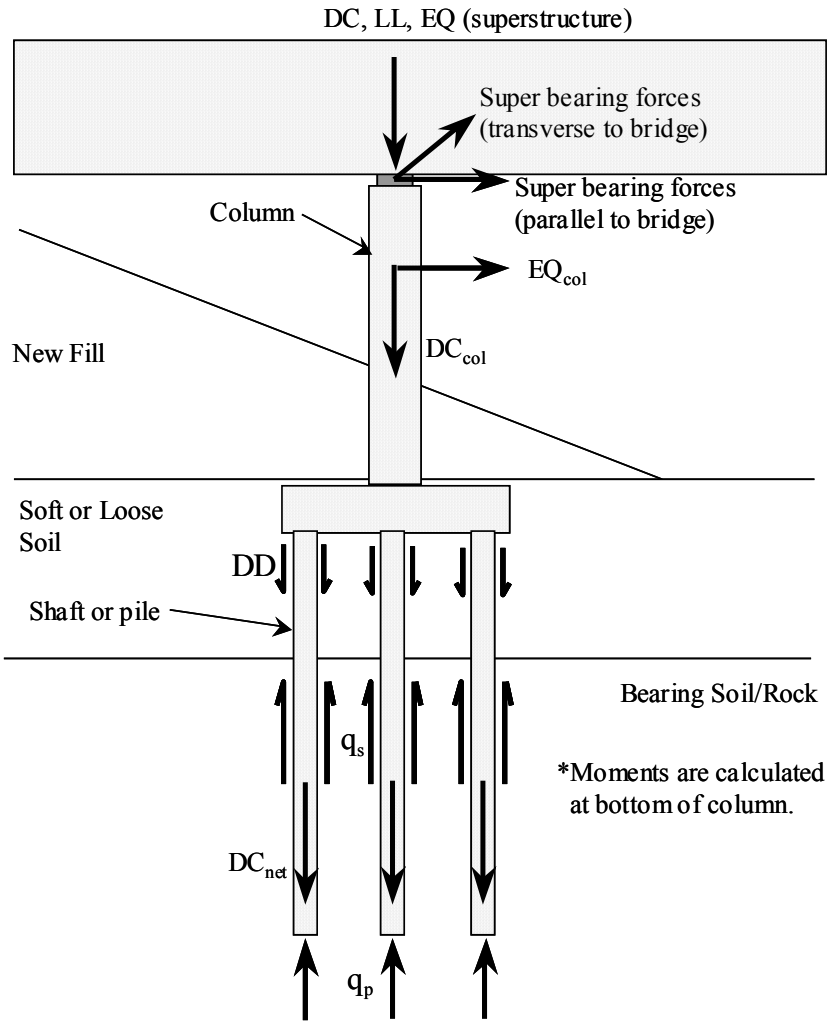

Where:

DC_{col} = structure load due to weight of column

EQ_{col} = earthquake inertial force due to weight of column

q_p = ultimate end bearing resistance at base of shaft (unit resistance)

q_s = ultimate side resistance on shaft (unit resistance)

DD= ultimate down drag load on shaft (total load)

DC_{net} = unit weight of concrete in shaft minus unit weight of soil times the shaft volume below the groundline (may include part of the column if the top of the shaft is deep due to scour or for other reasons

Definition and Location of Forces for Pile or Shaft Supported Footing
Figure 8-9

All other forces are as defined previously.

	Load Factor		
Load	**Bearing Stress**	**Uplift**	***Lateral Loading**
DC, DC_{col}	Use max. load factor	Use min. load factor	Use max load factor
LL	Use transient load factor (e.g., LL)	Use transient load factor (e.g., LL)	Use transient load factor (e.g., LL)
DC_{net}	Use max. load factor	Use min. load factor	N/A
DD	Use max. load factor	Treat as resistance, and use resistance factor for uplift	N/A

*Use unfactored loads to get force distribution in structure, then factor the resulting forces for final structural design.

Selection of Maximum or Minimum Deep Foundation Load Factors for Various Modes of Failure for the Strength Limit State
Table 8-8

All forces and load factors are as defined previously.

The loads and load factors to be used in pile foundation design shall be as specified in Section 3 of the AASHTO LRFD Bridge Design Specifications. Computational assumptions that shall be used in determining individual pile loads are described in Section 4 of the AASHTO LRFD Bridge Design Specifications.

8.12.2 Driven for Pile Foundation Geotechnical Design

Geotechnical design of driven pile foundations, and all related considerations, shall be conducted as specified in the AASHTO LRFD Bridge Design Specifications Article 10.7 (most current version), except as specified in following paragraphs and sections:

8.12.2.1 Driven Pile Sizes and Maximum Resistances

In lieu of more detailed structural analysis, the general guidance on pile types, sizes, and nominal resistance values provided in Table 8-9 may be used to select pile sizes and types for analysis. The Geotechnical Office limits the maximum nominal pile resistance for 24 inch piles to 1500 KIPS and 18 inch piles to 1,000 KIPS, and may limit the nominal pile resistance for a given pile size and type driven to a given soil/rock bearing unit based on experience with the given soil/rock unit. Note that this 1500 KIP limit for 24 inch diameter piles applies to closed end piles driven to bearing on to glacially overconsolidated till or a similar geologic unit. Open-ended piles, or piles driven to less competent bearing strata, should be driven to a lower nominal resistance. The maximum resistance allowed in that given soil/rock unit may be increased by the WSDOT Geotechnical Office per mutual agreement with the Bridge and Structures Office if a pile load test is performed.

Nominal pile Resistance (KIPS)	Pile Type and Diameter (in.)			
	Closed End Steel Pipe/ Cast-in-Place Concrete Piles	*Precast, Prestressed Concrete Piles	Steel H-Piles	Timber Piles
120	-	-	-	See WSDOT Standard Specs.
240	-	-	-	See WSDOT Standard Specs.
330	12 in.	13 in.	-	-
420	14 in.	16 in.	12 in.	-
600	18 in. nonseismic areas, 24 in. seismic areas	18 in.	14 in.	-
900	24 in.	Project Specific	Project Specific	-

*Precast, prestressed concrete piles are generally not used for highway bridges, but are more commonly used for marine work.

Typical Pile Types and Sizes for Various Nominal Pile Resistance Values
Table 8-9

8.12.2.2 Minimum Pile Spacing

Center-to-center pile spacing should not be less than the greater of 30 IN or 2.5 pile diameters or widths. A center-to-center spacing of less than 2.5 pile diameters may be considered on a case-by-case basis, subject to the approval of the WSDOT State Geotechnical Engineer and Bridge Design Engineer.

8.12.2.3 Determination of Pile Lateral Resistance

Pile foundations are subjected to horizontal loads due to wind, traffic loads, bridge curvature, vessel or traffic impact and earthquake. The nominal resistance of pile foundations to horizontal loads shall be evaluated based on both soil/rock and structural properties, considering soil-structure interaction. Determination of the soil/rock parameters required as input for design using soil-structure interaction methodologies is presented in Chapter 5.

See Article 10.7.2.4 in the AASHTO LRFD Bridge Design Specifications for detailed requirements regarding the determination of lateral resistance of piles.

Empirical data for pile spacings less than 3 pile diameters is very limited. If, due to space limitations, a smaller center-to-center spacing is used, subject to the requirements in Section 8.12.2.2, based on extrapolation of the values of P_m in Article 10.7.2.4 of the AASHTO LRFD Bridge Design Specifications, the following values of P_m at a spacing of no less than 2D may be used:

- For Row 1, $P_m = 0.45$
- For Row 2, $P_m = 0.33$
- For Row 3, $P_m = 0.25$

These values were extrapolated by fitting curves to the AASHTO Article 10.7.2.4 P_m values. A similar technique should be used to interpolate to intermediate values of foundation element spacing.

8.12.2.4 Batter Piles

WSDOT design preference is to avoid the use of batter piles unless no other structural option is available.

8.12.2.5 Service Limit State Design of Pile Foundations

Driven pile foundations shall be designed at the service limit state to meet the tolerable movements for the structure being supported in accordance with Section 8.6.5.1.

Service limit state design of driven pile foundations includes the evaluation of settlement due to static loads, and downdrag loads if present, overall stability, lateral squeeze, and lateral deformation.

Lateral analysis of pile foundations is conducted to establish the load distribution between the superstructure and foundations for all limit states, and to estimate the deformation in the foundation that will occur due to those loads. This section only addresses the evaluation of the lateral deformation of the foundation resulting from the distributed loads.

8.12.2.5.1 Overall Stability

The provisions of Section 8.6.5.2 shall apply.

8.12.2.5.2 Horizontal Pile Foundation Movement

The horizontal movement of pile foundations shall be estimated using procedures that consider soil-structure interaction as specified in Section 8.12.2.3.

8.12.2.6 Strength Limit State Geotechnical Design of Pile Foundations

8.12.2.6.1 Nominal Axial Resistance Change after Pile Driving

Setup as it relates to the WSDOT dynamic formula is discussed further in Section 8.12.2.6.4(a) and Allen (2005b, 2007).

8.12.2.6.2 Scour

If a static analysis method is used to determine the final pile bearing resistance (i.e., a dynamic analysis method is not used to verify pile resistance as driven), the available bearing resistance, and the pile tip penetration required to achieve the desired bearing resistance, shall be determined assuming that the soil subject to scour is completely removed, resulting in no overburden stress at the bottom of the scour zone.

Pile design for scour is illustrated in Figure 8-11, where,

R_{scour} = skin friction which must be overcome during driving through scour zone (KIPS)

Q_p = $(\Sigma\gamma_i Q_i)$ = factored load per pile (KIPS)

$D_{est.}$ = estimated pile length needed to obtain desired nominal resistance per pile (FT)

ϕ_{dyn} = resistance factor, assuming that a dynamic method is used

to estimate pile resistance during installation of the pile
(if a static analysis method is used instead, use ϕ_{stat})

From Equation 8-1, the summation of the factored loads ($\Sigma\gamma_i Q_i$) must be less than or equal to the factored resistance (φR_n). Therefore, the nominal resistance R_n must be greater than or equal to the sum of the factored loads divided by the resistance factor φ. Hence, the nominal bearing resistance of the pile needed to resist the factored loads is therefore,

$$R_n = (\Sigma\gamma_i Q_i)/\phi_{dyn} \quad (8\text{-}2)$$

If dynamic pile measurements or dynamic pile formula are used to determine final pile bearing resistance during construction, the resistance that the piles are driven to must be adjusted to account for the presence of the soil in the scour zone. The total driving resistance, R_{ndr}, needed to obtain R_n, accounting for the skin friction that must be overcome during pile driving that does not contribute to the design resistance of the pile is as follows:

$$R_{ndr} = R_{scour} + R_n \quad (8\text{-}3)$$

Note that R_{scour} remains unfactored in this analysis to determine R_{ndr}.

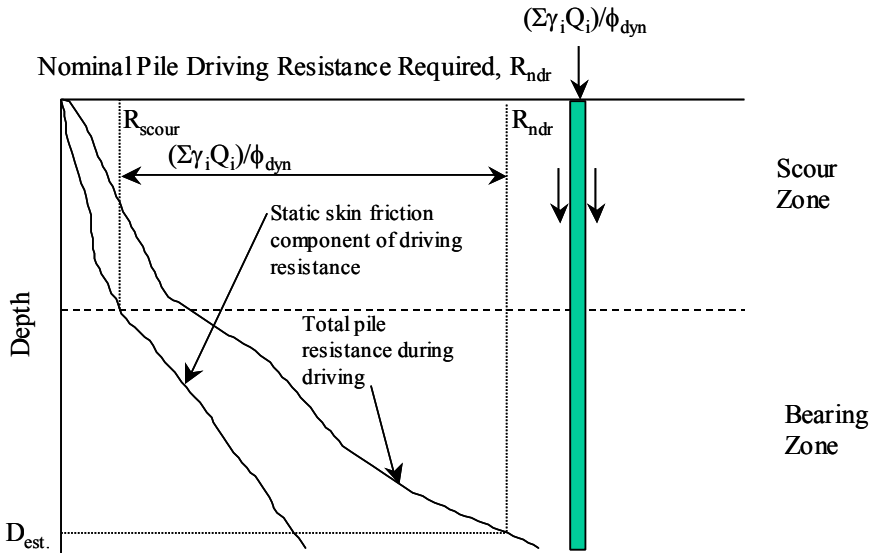

Design of Pile Foundations for Scour
Figure 8-11

8.12.2.6.3 Downdrag

The foundation should be designed so that the available factored geotechnical resistance is greater than the factored loads applied to the pile, including the downdrag, at the strength limit state. The nominal pile resistance available to support structure loads plus downdrag shall be estimated by considering only the positive skin and tip resistance below the lowest layer contributing to the downdrag. The pile foundation shall be designed to structurally resist the downdrag plus structure loads.

Pile design for downdrag is illustrated in Figure 8-12,

Where:

R_{Sdd} = skin friction which must be overcome during driving through downdrag zone (KIPS)

Q_p = $(\Sigma\gamma_i Q_i)$ = factored load per pile, excluding downdrag load (KIPS)

DD= downdrag load per pile (KIPS)

$D_{est.}$ = estimated pile length needed to obtain desired nominal resistance per pile (FT)

ϕ_{dyn} = resistance factor, assuming that a dynamic method is used to estimate pile resistance during installation of the pile (if a static analysis method is used instead, use ϕ_{stat})

γ_p = load factor for downdrag

Similar to the derivation of Equation 8-2, the nominal bearing resistance of the pile needed to resist the factored loads, including downdrag, is therefore,

$$R_n = (\Sigma\gamma_i Q_i)/\phi_{dyn} + \gamma_p DD/\phi_{dyn} \quad (8\text{-}4)$$

The total nominal driving resistance, R_{ndr}, needed to obtain R_n, accounting for the skin friction that must be overcome during pile driving that does not contribute to the design resistance of the pile, is as follows:

$$R_{ndr} = R_{Sdd} + R_n \quad (8\text{-}5)$$

where, R_{ndr} is the nominal pile driving resistance required. Note that R_{Sdd} remains unfactored in this analysis to determine R_{ndr}.

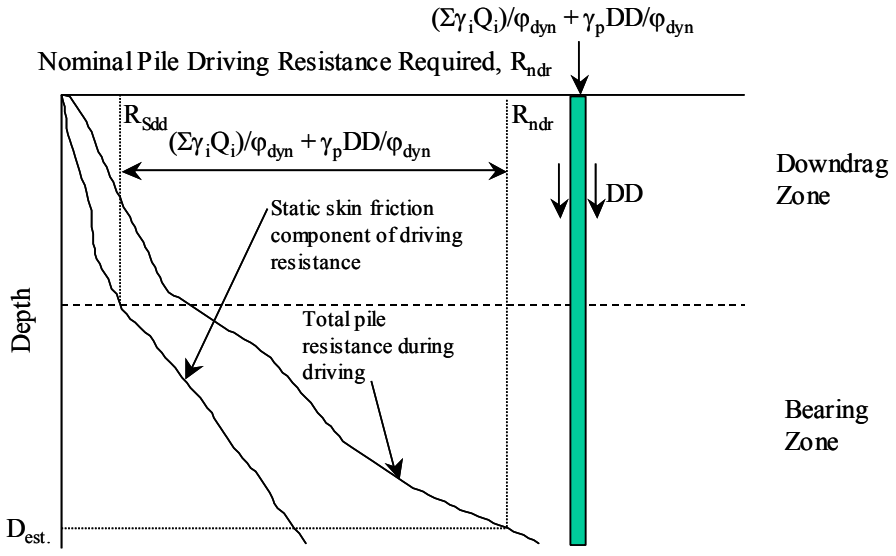

Design of Pile Foundations for Downdrag
Figure 8-12

In the instance where it is not possible to obtain adequate geotechnical resistance below the lowest layer contributing to downdrag (e.g., friction piles) to fully resist the downdrag, or if it is anticipated that significant deformation will be required to mobilize the geotechnical resistance needed to resist the factored loads including the downdrag load, the structure should be designed to tolerate the settlement resulting from the downdrag and the other applied loads in accordance with the AASHTO LRFD Bridge Design Specifications, Article 10.7.

The static analysis procedures in the AASHTO LRFD Bridge Design Specifications, Article 10.7 may be used to estimate the available pile resistance to withstand the downdrag plus structure loads to estimate pile lengths required to achieve the required bearing resistance. For this calculation, it should be assumed that the soil subject to downdrag still contributes overburden stress to the soil below the downdrag zone.

Resistance may also be estimated using a dynamic method per the AASHTO LRFD Bridge Design Specifications, Article 10.7, provided the skin friction resistance within the zone contributing to downdrag is subtracted from the resistance determined from the dynamic method during pile installation. The skin friction resistance within the zone contributing to downdrag may be estimated using the static analysis methods specified in the AASHTO LRFD Bridge Design Specifications, Article 10.7, from signal matching analysis, or from pile load test results. Note that the static analysis method may have a bias, on average over or under predicting the skin friction. The bias of the method selected to estimate the skin friction within and above the downdrag zone should be taken into account as described in the AASHTO LRFD Bridge Design Specifications, Article 10.7.

8.12.2.6.4 Determination of Nominal Axial Pile Resistance in Compression

If a dynamic formula is used to establish the driving criterion in lieu of a combination of dynamic measurements with signal matching, wave equation analysis, and/or pile load tests, the WSDOT Pile Driving Formula from the WSDOT *Standard Specifications for Roads, Bridge, and Municipal Construction* Section 6-05.3(12) shall be used, unless otherwise specifically approved by the WSDOT State Geotechnical Engineer.

The hammer energy used to calculate the nominal (ultimate) pile resistance during driving in the WSDOT and other driving formulae described herein is the developed energy. The developed hammer energy is the actual amount of gross energy produced by the hammer for a given blow. This value will never exceed the rated hammer energy (rated hammer energy is the maximum gross energy the hammer is capable of producing, i.e., at its maximum stroke).

The development of the WSDOT pile driving formula is described in Allen (2005b, 2007). The nominal (ultimate) pile resistance during driving using this method shall be taken as:

$$R_{ndr} = F \times E \times Ln\,(10N) \quad (8\text{-}6)$$

Where:

R_{ndr} = driving resistance, in TONS
F = 1.8 for air/steam hammers
= 1.2 for open ended diesel hammers and precast concrete or timber piles
= 1.6 for open ended diesel hammers and steel piles
= 1.2 for closed ended diesel hammers
= 1.9 for hydraulic hammers
= 0.9 for drop hammers
E = developed energy, equal to W times H[1], in feet-kips
W = weight of ram, in kips
H = vertical drop of hammer or stroke of ram, in feet
N = average penetration resistance in blows per inch for the last 4 inches of driving
Ln = the natural logarithm, in base "e"

[1]For closed-end diesel hammers (double-acting), the developed hammer energy (E) is to be determined from the bounce chamber reading. Hammer manufacturer calibration data may be used to correlate bounce chamber pressure to developed hammer energy. For double acting hydraulic and air/steam hammers, the developed hammer energy shall be calculated from ram impact velocity measurements or other means approved by the Engineer. For open ended diesel hammers (single-acting), the blows per minute may be used to determine the developed energy (E).

Note that R_{ndr} as determined by this driving formula is presented in units of TONS rather than KIPS, to be consistent with the WSDOT *Standard Specifications for Road, Bridge, and Municipal Construction* M 41-10. The above formula applies only when:

1. The hammer is in good condition and operating in a satisfactory manner;
2. A follower is not used;
3. The pile top is not damaged;
4. The pile head is free from broomed or crushed wood fiber;
5. The penetration occurs at a reasonably quick, uniform rate; and the pile has been driven at least 2 feet after any interruption in driving greater than 1 hour in length.
6. There is no perceptible bounce after the blow. If a significant bounce cannot be avoided, twice the height of the bounce shall be deducted from "H" to determine its true value in the formula.
7. For timber piles, bearing capacities calculated by the formula above shall be considered effective only when it is less than the crushing strength of the piles.
8. If "N" is greater than or equal to 1.0 blow/inch.

As described in detail in Allen (2005b, 2007), Equation 8-6 should not be used for nominal pile bearing resistances greater than approximately 1,000 KIPS (500 TONS), or for pile diameters greater than 30 inches, due to the paucity of data available to verify the accuracy of this equation at higher resistances and larger pile diameters, and due to the increased scatter in the data. Additional field testing and analysis, such as the use of a Pile Driving Analyzer (PDA) combined with signal matching, or a pile load

test, is recommended for piles driven to higher bearing resistance and pile diameters larger than 30 inches.

As is true of most driving formulae, if they have been calibrated to pile load test results, the WSDOT pile driving formula has been calibrated to N values obtained at end of driving (EOD). Since the pile nominal resistance obtained from pile load tests are typically obtained days, if not weeks, after the pile has been driven, the gain in pile resistance that typically occurs with time is in effect correlated to the EOD N value through the driving formula. That is, the driving formula assumes that an "average" amount of setup will occur after EOD when the pile nominal resistance is determined from the formula (see Allen, 2005b, 2007). Hence, the WSDOT driving formula shall not be used in combination with the resistance factor φ_{dyn} provided in **Section 8.9** for beginning of redrive (BOR) N values to obtain nominal resistance. If pile foundation nominal resistance must be determined based on restrike (BOR) driving resistance, dynamic measurements in combination with signal matching analysis and/or pile load test results should be used.

Since driving formulas inherently account for a moderate amount of pile resistance setup, it is expected that theoretical methodologies such as the wave equation will predict lower nominal bearing resistance values for the same driving resistance N than empirical methodologies such as the WSDOT driving formula. This should be considered when assessing pile drivability if it is intended to evaluate the pile/hammer system for contract approval purposes using the wave equation, but using a pile driving formula for field determination of pile nominal bearing resistance.

If a dynamic (pile driving) formula other than the one provided here is used, subject to the approval of the State Geotechnical Engineer, it shall be calibrated based on measured load test results to obtain an appropriate resistance factor, consistent with the AASHTO LRFD Bridge Design Specifications, Article 10.7 and Allen (2005b, 2007).

If a dynamic formula is used, the structural compression limit state cannot be treated separately as with the other axial resistance evaluation procedures unless a drivability analysis if performed. Evaluation of pile drivability, including the specific evaluation of driving stresses and the adequacy of the pile to resist those stresses without damage, is strongly recommended. When drivability is not checked, it is necessary that the pile design stresses be limited to values that will assure that the pile can be driven without damage. For steel piles, guidance is provided in Article 6.15.2 of the AASHTO LRFD Bridge Design Specifications for the case where risk of pile damage is relatively high. If pile drivability is not checked, it should be assumed that the risk of pile damage is relatively high. For concrete piles and timber piles, no specific guidance is available in Sections 5 and 8, respectively, of the AASHTO LRFD Bridge Design Specifications regarding safe design stresses to reduce the risk of pile damage. In past practice (see AASHTO 2002), the required nominal axial resistance has been limited to $0.6 f'_c$ for concrete piles and 2,000 psi for timber piles if pile drivability is not evaluated.

8.12.2.6.5 Nominal Horizontal Resistance of Pile Foundations

The nominal resistance of pile foundations to horizontal loads shall be evaluated based on both geomaterial and structural properties. The horizontal soil resistance along the piles should be modeled using P-Y curves developed for the soils at the site, as specified in Section 8.12.2.3. For piles classified as short or intermediate as defined in Section 8.13.2.4.3, Strain Wedge Theory (Norris, 1986; Ashour, et al., 1998) may used.

The applied loads shall be factored loads and they must include both horizontal and axial loads. The analysis may be performed on a representative single pile with the appropriate pile top boundary condition or on the entire pile group. If P-Y curves are used, they shall be modified for group effects. The P-multipliers Article 10.7.2.4 of the AASHTO LRFD Bridge Design Specifications and Section 8.12.2.3 should be used to modify the curves. If strain wedge theory is used, P-multipliers shall not be used, but group effects shall be addressed through evaluation of the overlap between shear zones formed due to the passive wedge that develops in front of each pile in the group as lateral deflection increases. If the pile cap will always be embedded, the P-Y horizontal resistance of the soil on the cap face may be included in the horizontal resistance.

8.12.2.7 Extreme Event Limit State Design of Pile Foundations

For the applicable factored loads (see AASHTO LRFD Bridge Design Specifications, Section 3) for each extreme event limit state, the pile foundations shall be designed to have adequate factored axial and lateral resistance. For seismic design, all soil within and above liquefiable zones shall not be considered to contribute axial compressive resistance. Downdrag resulting from liquefaction induced settlement shall be determined as specified in Section 6.5.3 and the AASHTO LRFD Bridge Design Specifications (Article 3.11.8), and shall be included in the loads applied to the foundation. Static downdrag loads shall not be combined with seismic downdrag loads due to liquefaction.

The available factored geotechnical resistance should be greater than the factored loads applied to the pile, including the downdrag, at the extreme event limit state. The pile foundation shall be designed to structurally resist the downdrag plus structure loads.

Pile design for liquefaction downdrag is illustrated in Figure 8-13, where,

R_{Sdd} = skin friction which must be overcome during driving through downdrag zone
Q_p = $(\Sigma\gamma_i Q_i)$ = factored load per pile, excluding downdrag load
DD = downdrag load per pile
$D_{est.}$ = estimated pile length needed to obtain desired nominal resistance per pile
φ_{seis} = resistance factor for seismic conditions
γ_p = load factor for downdrag

The nominal bearing resistance of the pile needed to resist the factored loads, including downdrag, is therefore,

$$R_n = (\Sigma\gamma_i Q_i)/\phi_{seis} + \gamma_p DD/\phi_{seis} \quad (8\text{-}7)$$

The total driving resistance, R_{ndr}, needed to obtain R_n, accounting for the skin friction that must be overcome during pile driving that does not contribute to the design resistance of the pile, is as follows:

$$R_{ndr} = R_{Sdd} + R_n \quad (8\text{-}8)$$

Note that R_{Sdd} remains unfactored in this analysis to determine R_{ndr}.

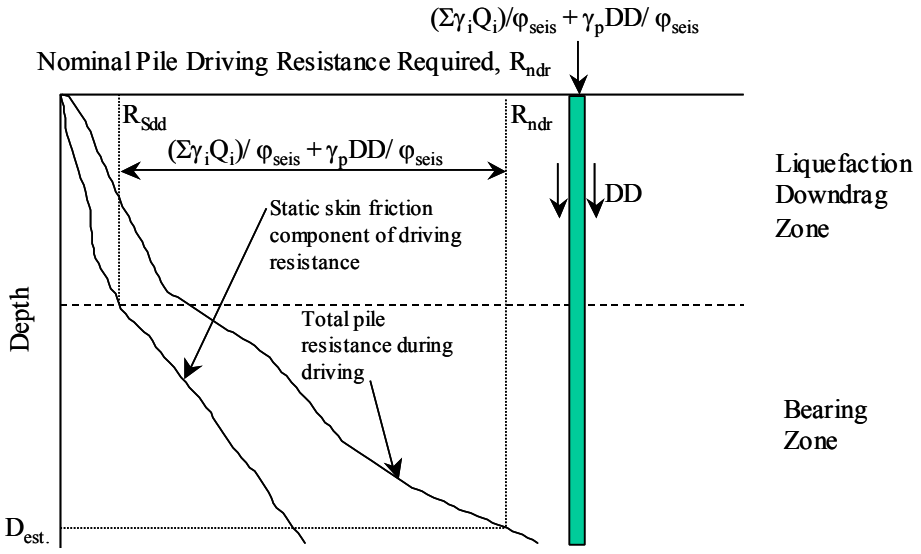

Design of Pile Foundations for Liquefaction Downdrag
Figure 8-13

In the instance where it is not possible to obtain adequate geotechnical resistance below the lowest layer contributing to downdrag (e.g., friction piles) to fully resist the downdrag, or if it is anticipated that significant deformation will be required to mobilize the geotechnical resistance needed to resist the factored loads including the downdrag load, the structure should be designed to tolerate the settlement resulting from the downdrag and the other applied loads in accordance with AASHTO LRFD Bridge Design Specifications.

The static analysis procedures in AASHTO LRFD Bridge Design Specifications may be used to estimate the available pile resistance to withstand the downdrag plus structure loads to estimate pile lengths required to achieve the required bearing resistance. For this calculation, it should be assumed that the soil subject to downdrag still contributes overburden stress to the soil below the downdrag zone.

Resistance may also be estimated using a dynamic method per AASHTO LRFD Bridge Design Specifications, provided the skin friction resistance within the zone contributing to downdrag is subtracted from the resistance determined from the dynamic method during pile installation. The skin friction resistance within the zone contributing to downdrag may be estimated using the static analysis methods specified in AASHTO LRFD Bridge Design Specifications, from signal matching analysis, or from pile load test results. Note that the static analysis method may have a bias, on average over or under predicting the skin friction. The bias of the method selected to

estimate the skin friction within and above the downdrag zone should be taken into account as described in AASHTO LRFD Bridge Design Specifications.

Downdrag forces estimated using these methods may be conservative, as the downdrag force due to liquefaction may be between the full static shear strength and the liquefied shear strength acting along the length of the deep foundation elements (see **Section 6.5.3**).

The pile foundation shall also be designed to resist the horizontal force resulting from lateral spreading, if applicable, or the liquefiable soil shall be improved to prevent liquefaction and lateral spreading. For lateral soil resistance of the pile foundation, if P-Y curves are used, the soil input parameters should be reduced to account for liquefaction. To determine the amount of reduction, the duration of strong shaking and the ability of the soil to fully develop a liquefied condition during the period of strong shaking should be considered.

Regarding the reduction of P-Y soil strength and stiffness parameters to account for liquefaction, see Section 6.5.1.2.

The force resulting from flow failure/lateral spreading should be calculated as described in Chapter 6.

When designing for scour at the extreme event limit state, the pile foundation design shall be conducted as described in Section 8.12.4.5, and the AASHTO LRFD Bridge Design Specifications. The resistance factors and the check flood per the AASHTO Bridge Design Specifications shall be used.

8.13 Drilled Shaft Foundation Design

Figure 8-14 provides a flowchart that illustrates the design process, and interaction required between structural and geotechnical engineers, needed to complete a drilled shaft foundation design. ST denotes steps usually completed by the Structural Designer, while GT denotes those steps normally completed by the Geotechnical Designer.

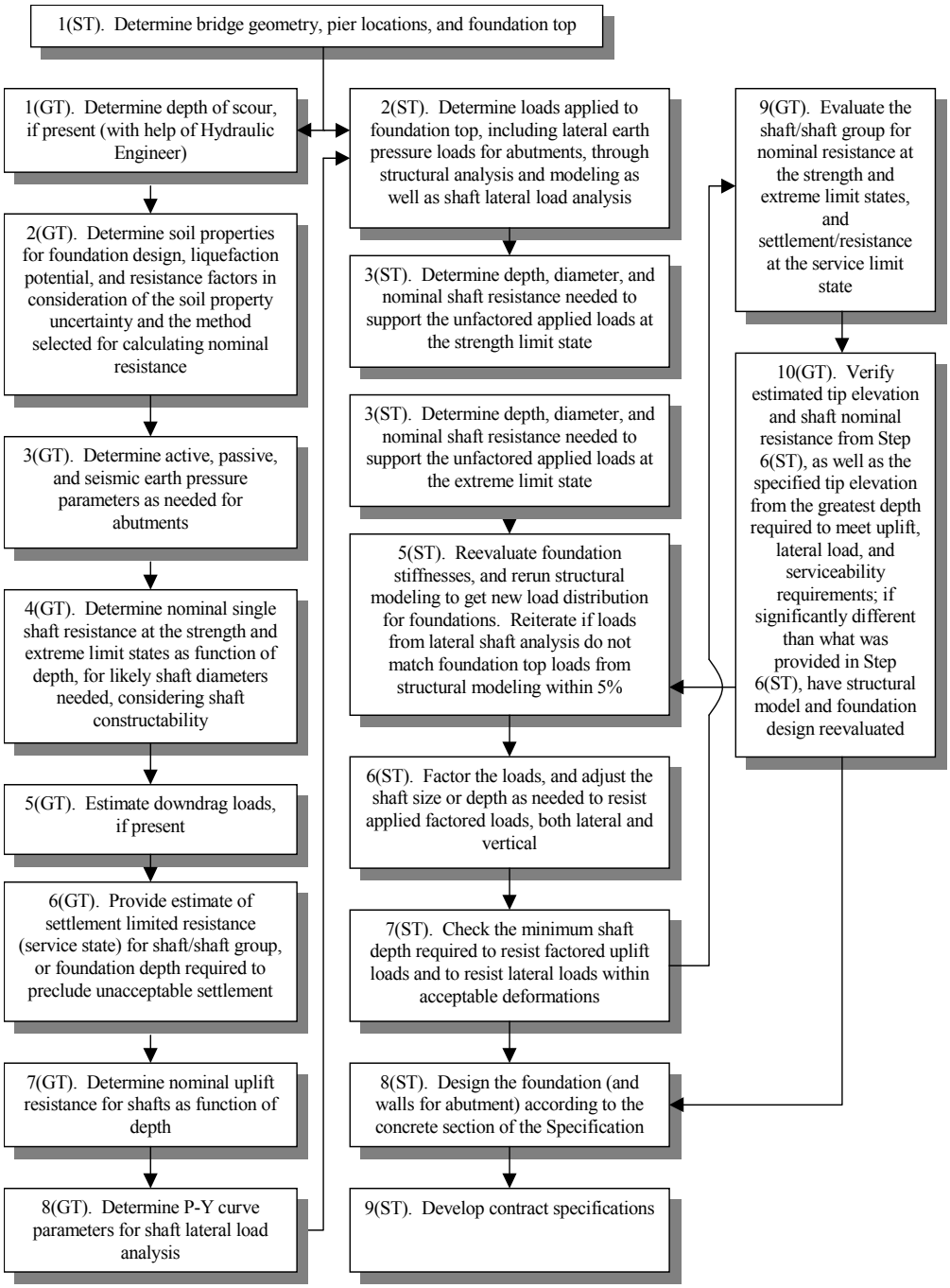

Design Flowchart For Drill Shaft Foundation Design
Figure 8-14

8.13.1 Loads and Load Factor Application to Drilled Shaft Design

Figures 8-8 and 8-9 provide definitions and typical locations of the forces and moments that act on deep foundations such as drilled shafts. Table 8-8 identifies when to use maximum or minimum load factors for the various modes of failure for the shaft (bearing capacity, uplift, and lateral loading) for each force, for the strength limit state.

The loads and load factors to be used in shaft foundation design shall be as specified in Section 3 of the AASHTO LRFD Bridge Design Specifications. Computational assumptions that shall be used in determining individual shaft loads are described in Section 4 of the AASHTO LRFD specifications.

8.13.2 Drilled Shaft Geotechnical Design

Geotechnical design of drilled shaft foundations, and all related considerations, shall be conducted as specified in the AASHTO LRFD Bridge Design Specifications Article 10.8 (2012 version, but as revised/supplemented in Appendix 8-B until the next edition of the AASHTO LRFD specifications, which will contain the revised drilled shaft design specifications provided in Appendix 8-B, are published), except as specified in following paragraphs and sections:

8.13.2.1 General Considerations

The provisions of Section 8.13 and all subsections shall apply to the design of drilled shafts. Throughout these provisions, the use of the term "drilled shaft" shall be interpreted to mean a shaft constructed using either drilling or casing plus excavation equipment and related technology. These provisions shall also apply to shafts that are constructed using casing advancers that twist or rotate casings into the ground concurrent with excavation rather than drilling. The provisions of this section are not applicable to drilled piles installed with continuous flight augers that are concreted as the auger is being extracted (e.g., this section does not apply to the design of augercast piles).

Shaft designs should be reviewed for constructability prior to advertising the project for bids.

8.13.2.2 Nearby Structures

Where shaft foundations are placed adjacent to existing structures, the influence of the existing structure on the behavior of the foundation, and the effect of the foundation on the existing structures, including vibration effects due to casing installation, should be investigated. In addition, the impact of caving soils during shaft excavation on the stability of foundations supporting adjacent structures should be evaluated. For existing structure foundations that are adjacent to the proposed shaft foundation, and if a shaft excavation cave-in could compromise the existing foundation in terms of stability or increased deformation, the design should require that casing be advanced as the shaft excavation proceeds.

8.13.2.3 Service Limit State Design of Drilled Shafts

Drilled shaft foundations shall be designed at the service limit state to meet the tolerable movements for the structure being supported in accordance with Section 8.6.5.1.

Service limit state design of drilled shaft foundations includes the evaluation of settlement due to static loads, and downdrag loads if present, overall stability, lateral squeeze, and lateral deformation.

Lateral analysis of shaft foundations is conducted to establish the load distribution between the superstructure and foundations for all limit states, and to estimate the deformation in the foundation that will occur due to those loads. This section only addresses the evaluation of the lateral deformation of the foundation resulting from the distributed loads.

8.13.2.3.1 Horizontal Movement of Shafts and Shaft Groups

The provisions of Section 8.12.2.3 and Appendix 8-B shall apply.

8.13.2.3.2 Overall Stability

The provisions of Section 8.6.5.2 shall apply.

8.13.2.4 Strength Limit State Geotechnical Design of Drilled Shafts

The nominal shaft geotechnical resistances that shall be evaluated at the strength limit state include:

- Axial compression resistance,
- Axial uplift resistance,
- Punching of shafts through strong soil into a weaker layer,
- Lateral geotechnical resistance of soil and rock strata,
- Resistance when scour occurs, and
- Axial resistance when downdrag occurs.

If very strong soil, such as glacially overridden tills or outwash deposits, is present, and adequate performance data for shaft axial resistance in the considered geological soil deposit is available, the nominal end bearing resistance may be increased above the limit specified for bearing in soil in the AASHTO LRFD Bridge Design Specifications up to the loading limit that performance data indicates will produce good long-term performance. Alternatively, load testing may be conducted to validate the value of bearing resistance selected for design.

8.13.2.4.1 Scour

The effect of scour shall be considered in the determination of the shaft penetration. Resistance after scour shall be based on the applicable provisions of Section 8.12.2.6.2 and the AASHTO LRFD Bridge Design Specifications Section 10. The shaft foundation shall be designed so that the shaft penetration after the design scour event satisfies the required nominal axial and lateral resistance. For this calculation, it shall be assumed that the soil lost due to scour does not contribute to the overburden stress in the soil below the scour zone. The shaft foundation shall be designed to resist debris loads occurring during the flood event in addition to the loads applied from the structure.

The resistance factors are those used in the design without scour. The axial resistance of the material lost due to scour shall not be included in the shaft resistance.

8.13.2.4.2 Downdrag

The nominal shaft resistance available to support structure loads plus downdrag shall be estimated by considering only the positive skin and tip resistance below the lowest layer contributing to the downdrag. For this calculation, it shall be assumed that the soil contributing to downdrag does contribute to the overburden stress in the soil below the downdrag zone. In general, the available factored geotechnical resistance should be greater than the factored loads applied to the shaft, including the downdrag, at the strength limit state.

In the instance where it is not possible to obtain adequate geotechnical resistance below the lowest layer contributing to downdrag (e.g., friction shafts) to fully resist the downdrag, the structure should be designed to tolerate the settlement resulting from the downdrag and the other applied loads.

8.13.2.4.3 Nominal Horizontal Resistance of Shaft and Shaft Group Foundations

The provisions of Section 8.12.2.6.5 and Appendix 8-B shall apply. For shafts classified as short or intermediate, when laterally loaded, the shaft maintains a lateral deflection pattern that is close to a straight line. A shaft is defined as short if its length, L, to relative stiffness ratio (L/T) is less than or equal to 2, intermediate when this ratio is less than or equal to 4 but greater than 2, and long when this ratio is greater than 4, where relative stiffness, T, is defined as:

$$T = \left(\frac{EI}{f} \right)^{0.2} \qquad (8\text{-}9)$$

where,

E = the shaft modulus

I = the moment of inertia for the shaft, and EI is the bending stiffness of the shaft, and

f = coefficient of subgrade reaction for the soil into which the shaft is embedded as provided in NAVFAC DM 7.2 (1982)

For shafts classified as short or intermediate as defined above, strain wedge theory (Norris, 1986; Ashour, et al., 1998) may be used to estimate the lateral resistance of the shafts in lieu of P-Y methods.

The design of horizontally loaded drilled shafts shall account for the effects of interaction between the shaft and ground, including the number of shafts in the group. When strain wedge theory is used to assess the lateral load response of shaft groups, group effects shall be addressed through evaluation of the overlap between shear zones formed due to the passive wedge that develops in front of each shaft in the group as lateral deflection increases.

8.13.2.5 Extreme Event Limit State Design of Drilled Shafts

The provisions of Section 8.12.2.7 shall apply, except that for liquefaction downdrag, the nominal shaft resistance available to support structure loads plus downdrag shall be estimated by considering only the positive skin and tip resistance below the lowest layer contributing to the downdrag. For this calculation, it shall be assumed that the soil contributing to downdrag does contribute to the overburden stress in the soil below the downdrag zone. In general, the available factored geotechnical resistance should be greater than the factored loads applied to the shaft, including the downdrag, at the

strength limit state. The shaft foundation shall be designed to structurally resist the downdrag plus structure loads.

In the instance where it is not possible to obtain adequate geotechnical resistance below the lowest layer contributing to downdrag (e.g., friction shafts) to fully resist the downdrag, the structure should be designed to tolerate the settlement resulting from the downdrag and the other applied loads.

8.14 Micropiles

Micropiles shall be designed in accordance with Articles 10.5 and 10.9 of the AASHTO LRFD Bridge Design Specifications. Additional background information on micropile design may be found in the FHWA Micropile Design and Construction Guidelines Implementation Manual, Publication No. FHWA-SA-97-070 (Armour, et al., 2000).

8.15 Proprietary Foundation Systems

Only proprietary foundation systems that have been reviewed and approved by the WSDOT New Products Committee, and subsequently added to Appendix 8-A of this manual, may be used for structural foundation support.

In general, proprietary foundation systems shall be evaluated based on the following:

1. The design shall rely on published and proven technology, and should be consistent with the AASHTO LRFD Bridge Design Specifications and this geotechnical design manual. Deviations from the AASHTO specifications and this manual necessary to design the foundation system must be fully explained based on sound geotechnical theory and supported empirically through full scale testing.
2. The quality of the foundation system as constructed in the field is verifiable.
3. The foundation system is durable, and through test data it is shown that it will have the necessary design life (usually 75 years or more).
4. The limitations of the foundation system in terms of its applicability, capacity, constructability, and potential impact to adjacent facilities during and after its installation (e.g., vibrations, potential subsurface soil movement, etc.) are clearly identified.

8.16 Detention Vaults

8.16.1 Overview

Requirements for sizing and locating detention/retention vaults are provided in the *Highway Runoff Manual*. Detention/retention vaults as described in this section include wet vaults, combined wet/detention vaults and detention vaults. For specific details regarding the differences between these facilities, please refer to Chapter 5 of the *WSDOT Highway Runoff Manual*. For geotechnical and structural design purposes, a detention vault is a buried reinforced concrete structure designed to store water and retain soil, with or without a lid. The lid and the associated retaining walls may need to be designed to support a traffic surcharge. The size and shape of the detention vaults can vary. Common vault widths vary from 15 feet to over 60 feet. The length can vary greatly. Detention vaults over a 100 feet in length have been proposed for some projects. The base of the vault may be level or may be sloped from each side toward the center forming a broad V to facilitate sediment removal. Vaults have specific site

design elements, such as location with respect to right-of-way, septic tanks and drain fields. The geotechnical designer must address the adequacy of the proposed vault location and provide recommendations for necessary set-back distances from steep slopes or building foundations.

8.16.2 Field Investigation Requirements

A geotechnical reconnaissance and subsurface investigation are critical for the design of all detention vaults. All detention vaults, regardless of their size, will require an investigation of the underlying soil/rock that supports the structure.

The requirements for frequency of explorations provided in Table 8-10 should be used. Additional explorations may be required depending on the variability in site conditions, vault geometry, and the consequences should a failure occur.

Vault surface area (ft^2)	Exploration points (minimum)
<200	1
200 - 1000	2
1000 – 10,000	3
>10,000	3 - 4

Minimum Exploration Requirements for Detention Vaults
Table 8-10

The depth of the borings will vary depending on the height of soil being retained by the vault and the overall depth of the vault. The borings should be extended to a depth below the bottom elevation of the vault a minimum of 1.5 times the height of the exterior walls. Exploration depth should be great enough to fully penetrate soft highly compressible soils (e.g., peat, organic silt, soft fine grained soils) into competent material of suitable bearing resistance (e.g., very stiff to hard cohesive soil, dense cohesionless soil or bedrock). Since these structures may be subjected to hydrostatic uplift forces, a minimum of one boring must be instrumented with a piezometer to measure seasonal variations in ground water unless the ground water depth is known to be well below the bottom of the vault at all times.

8.16.3 Design Requirements

A detention vault is an enclosed buried structure surrounded by three or more retaining walls. Therefore, for the geotechnical design of detention vault walls, design requirements provided in Chapter 15 are applicable. Since the vault walls typically do not have the ability to deform adequately to allow active earth pressure conditions to develop, at rest conditions should be assumed for the design of the vault walls (see Chapter 15.

If the seasonal high ground water level is above the base of the vault, the vault shall be designed for the uplift forces that result from the buoyancy of the structure. Uplift forces should be resisted by tie-down anchors or deep foundations in combination with the weight of the structure and overburden material over the structure.

Temporary shoring may be required to allow excavation of the soil necessary to construct the vault. See Chapter 15 for guidelines on temporary shoring. If a shoring wall is used to permanently support the sides of the vault or to provide permanent uplift resistance to buoyant forces, the shoring wall(s) shall be designed as permanent wall(s).

8.17 References

AASHTO, 2012, *LRFD Bridge Design Specifications*, American Association of State Highway and Transportation Officials, Sixth Edition, Washington, D.C., USA. (**Note**: Most current edition shall be used).

Allen, T. M., 2005, *Development of Geotechnical Resistance Factors and Downdrag Load Factors for LRFD Foundation Strength Limit State Design*, Publication No. FHWA-NHI-05-052, Federal Highway Administration, Washington, DC, 41 pp.

Allen, T. M., 2005b, *Development of the WSDOT Pile Driving Formula and Its Calibration for Load and Resistance Factor Design (LRFD)*, WSDOT Research Report WA-RD 610.1, Olympia, WA, 45 pp.

Allen, T. M., 2007, "Development of New Pile-Driving Formula and Its Calibration for Load and Resistance Factor Design," *Transportation Research Record 2004*, TRB, National Research Council, Washington, DC., pp. 20-27.

Armour, T., Groneck, T., Keeley, J., and Sharma, S., 2000, Micropile Design and Construction Guidelines Implementation Manual, FHWA-SA-97-070, 376 pp.

Ashour, M., and Norris, G. M., 1999, "Liquefaction and Undrained Response Evaluation of Sands from Drained Formulation," ", ASCE Journal of Geotechnical and Geoenvironmental Engineering, Vol. 125, No. 8, pp. 649-658.

Ashour, M., and Norris, G. M., 2003, "Lateral Loaded Pile Response in Liquefiable Soil", ASCE Journal of Geotechnical and Geoenvironmental Engineering, Vol. 129, No. 6, pp. 404-414.

Ashour, M., Norris, G. M., and Pilling, P., 1998, "Lateral Loading of a Pile in layered Soil Using the Strain Wedge Model," *ASCE Journal of Geotechnical and Geoenvironmental Engineering,* ASCE, Vol. 124, No. 4, pp. 303-315.

Ashour, M., Norris, G. M., and Pilling, P., 2002, "Strain Wedge Model Capability of Analyzing Behavior of Laterally Loaded Isolated Piles, Drilled Shafts, and Pile Groups," *ASCE Journal of Geotechnical and Geoenvironmental Engineering,* Vol. 7, No. 4, pp. 245-254.

Barker, R. M., J. M. Duncan, K. B. Rojiani, P. S. K. Ooi, C. K. Tan, and S. G. Kim. 1991. "Manuals for the Design of Bridge Foundations." *NCHRP Report 343*. TRB, National Research Council, Washington, DC.

Broms, B.B., 1964a. Lateral Resistance of Piles in Cohesive Soil. ASCE, Journal for Soil Mechanics and Foundation Engineering, Vol 90, SM2, 27 – 63.

Broms, B.B., 1964b. Lateral Resistance of Piles in Cohesionless Soil. ASCE, Journal for Soil Mechanics and Foundation Engineering, Vol 90, SM3, 123 – 156.

DiMillio, A. F., 1982. "Performance of Highway Bridge Abutments Supported by Spread Footings on Compacted Fill," *Report No. FHWA/RD-81/184*, (NTIS PB83-201822). (FHWA Staff Study).

Hannigan, P.J., G.G. Goble, G.E. Likins and F. Rausche, 2006. "Design and Construction of Driven Pile Foundations" - Vol. I and II, Federal Highway Administration Report No. FHWA-HI-05-042, Federal Highway Administration, Washington, D.C., 822 pp.

Hoek, E., C. Carrazna-Torres, and B. Corkum, 2002. "Hoek-Brown Failure Criterion – 2002 Edition," *5th North American Rock Mechanics Symposium and 17th Tunneling Association of Canada Conference:* NARMS-TAC, pp. 267-271.

Hough, B.K. 1959. "Compressibility as the Basis for Soil Bearing Value," *Journal of the Soil Mechanics and Foundations Division*, ASCE, Vol. 85, Part 2.

Ishihara, K., and Yoshimine, M., 1992. "Evaluation of settlements in sand deposits following liquefaction during earthquakes." Soils and Foundations, JSSMFE, Vol. 32, No. 1, March, pp. 173-188.

Kavazanjian, E., Jr., Matasoviæ, T. Hadj-Hamou and Sabatini, P.J. 1997. "Geotechnical Engineering Circular No. 3, Design Guidance: Geotechnical Earthquake Engineering for Highways," *Report No. FHWA-SA-97-076*, Federal Highway Administration, Washington, D.C.

Kimmerling, R. E. 2002. Geotechnical Engineering Circular 6. *Report No. FHWA-SA-02-054,* Federal Highway Administration, Washington, D.C.

Kyfor, Z. G., Schnore, A. R., Carlo, T. A., and Bailey, P. F., 1992. Static Testing of Deep Foundations. Report No. FHWA-SA-91-042, U. S. Department of Transportation, Federal Highway Administration, Office of Technology Applications, Washington D. C., 174

Lam, I. P, and G. R. Martin. 1986. "Seismic Design of Highway Bridge Foundations." Vol. 2, *Design Procedures and Guidelines*. FHWA/RD-86/102, Federal Highway Administration, U.S. Department of Transportation, Washington, DC, p. 18.

Liang, R. Y., 2010, *Field Intrumentation, Monitoring of Drilled Shafts for Landslide Stabilization and Development of Pertinent Design Method*, Report No. FHWA/OH-2010/15, Ohio Department of Transportation, 238 pp.

Moulton, L. K., H. V. S. GangaRao, and G. T. Halverson. 1985. "Tolerable Movement Criteria for Highway Bridges." *FHWA/RD-85/107*. Federal Highway Administration, U.S. Department of Transportation, Washington, DC, p. 118.

Munfakh, G., Arman, A., Collin, J.G., Hung, J.C.-J., and Brouillette, R.P. 2001. "Shallow Foundations Reference Manual," *Publication No. FHWA-NHI-01-023*, Federal Highway Administration, Washington, D.C.

Norris, G. M., 1986, "Theoretically based BEF Laterally Loaded Pile Analysis: Proceedings, Third International Conference on Numerical Methods in Offshore Piling, Nantes, France, pp. 361-386.

Reese, L. C. 1984. "Handbook on Design of Piles and Drilled Shafts Under Lateral Load." *FHWA-IP-84/11*, Federal Highway Administration, U.S. Department of Transportation, Washington, DC.

Reese, L. C., 1986. Behavior of Piles and Pile Groups Under Lateral Load. Report No. FHWA/RD-85/106, U. S. Department of Transportation, Federal Highway Administration, Office of Engineering and Highway Operations Research and Development, Washington D. C., 311

Sabatini, P.J, Bachus, R.C, Mayne, P.W., Schneider, J.A., Zettler, T.E. (2002), Geotechnical Engineering Circular 5 (GEC5) - Evaluation of Soil and Rock Properties.

Report No FHWA-IF-02-034. Federal Highway Administration, U.S. Department of Transportation.

Samtani, N. C., and Nowatzki, E. A., 2006. *Soils and Foundations Workshop Reference Manual, Volumes 1 and 2*. Washington, DC, National Highway Institute Publication NHI-06-088 and NHI-06-089, Federal Highway Administration, 1056 pp.

Seed, R. B. and Harder, L. F. Jr., 1990. SPT-Based Analysis of Cyclic Pore Pressure Generation and Undrained Residual Strength. Proceedings, H. B. Bolton Seed Memorial Symposium, J. M. Duncan Editor, BiTech Publishers, Vol 2, 351-376.

Tokimatsu, K. and Bolton Seed, B. 1987. Evaluation of Settlements in Sands due to Earthquake Shaking, Journal of Geotechnical Engineering, ASCE, 113, 8, 861-878.

Vessely, A., Yamasaki, K., and Strom, R., 2007. "Landslide Stabilization Using Piles." *Proc. of the 1st N. American Conf. on Landslides*, Vail, Colorado, Assoc. of Environmental & Engineering Geologists, pp. 1173-1183.

Williams, M.E., M. McVay and M.I. Hoit, 2003. "LRFD Substructure and Foundation Design Programs", Proceedings of the 2003 International Bridge Conference, June 9-11, Pittsburgh, Pa.

WSDOT, 2012, Bridge Design Manual LRFD, M 23-50 (**Note**: Most current edition shall be used.)

WSDOT, 2012, *Standard Specifications for Road, Bridge, and Municipal Construction*, M 41-01 (**Note**: Most current edition shall be used).

Yamasaki, K., Strom, R. W., Gunsolus, R. A., and D. Andrew Vessely, 2013, "Long-Term Performance of Landslide Shear Piles," *ASCE Geo-Congress 2013*, pp. 1936-1950.

Appendix 8-A Approved Proprietary Foundation Systems (Vacant)

Appendix 8-B Approved AASHTO LRFD Bridge Design Specifications Drill Shaft Design Provisions

Approved AASHTO LRFD Bridge Design Specifications – Drilled Shaft Design Provisions – Approved June 2013

The AASHTO approved design provisions that follow update Section 10 of the 2012 AASHTO LRFD Bridge Design Specifications and shall be used until these updated provisions are published in the next edition of the AASHTO specifications." The strike-through text shown in the pages that follow in this appendix represent text, tables, and figures that will be removed from Section 10 of the 2012 AASHTO LRFD Bridge Design Specifications, and the underlined text, tables, and figures represent what will be added to Section 10 of the 2012 AASHTO LRFD Bridge Design Specifications.

1

ATTACHMENT A — 2013 AGENDA ITEM __ - T-15

10.1—SCOPE – ***NO CHANGES – NOT SHOWN***

10.2—DEFINITIONS

ONE ADDITION BELOW – THE REMAINDER STAYS THE SAME

GSI—Geologic Strength Index

10.3—NOTATION

ONE ADDITION BELOW – THE REMAINDER STAYS THE SAME

s, m, a = fractured rock mass parameters (10.4.6.4)

10.4—SOIL AND ROCK PROPERTIES

10.4.1—Informational Needs – ***NO CHANGES – NOT SHOWN***

10.4.2—Subsurface Exploration

Subsurface explorations shall be performed to provide the information needed for the design and construction of foundations. The extent of exploration shall be based on variability in the subsurface conditions, structure type, and any project requirements that may affect the foundation design or construction. The exploration program should be extensive enough to reveal the nature and types of soil deposits and/or rock formations encountered, the engineering properties of the soils and/or rocks, the potential for liquefaction, and the groundwater conditions. The exploration program should be sufficient to identify and delineate problematic subsurface conditions such as karstic formations, mined out areas, swelling/collapsing soils, existing fill or waste areas, etc.

Borings should be sufficient in number and depth to establish a reliable longitudinal and transverse substrata profile at areas of concern such as at structure foundation locations and adjacent earthwork locations, and to investigate any adjacent geologic hazards that could affect the structure performance.

C10.4.2

The performance of a subsurface exploration program is part of the process of obtaining information relevant for the design and construction of substructure elements. The elements of the process that should precede the actual exploration program include a search and review of published and unpublished information at and near the site, a visual site inspection, and design of the subsurface exploration program. Refer to Mayne et al. (2001) and Sabatini et al. (2002) for guidance regarding the planning and conduct of subsurface exploration programs.

The suggested minimum number and depth of borings are provided in Table 10.4.2-1. While engineering judgment will need to be applied by a licensed and experienced geotechnical professional to adapt the exploration program to the foundation types and depths needed and to the variability in the subsurface conditions observed, the intent of Table 10.4.2-1 regarding the minimum level of exploration needed should be carried out. The depth of borings indicated in Table 10.4.2-1 performed before or during design should take into account the potential for changes in the type, size and depth of the planned foundation elements.

As a minimum, the subsurface exploration and testing program shall obtain information adequate to analyze foundation stability and settlement with respect to:

- Geological formation(s) present,
- Location and thickness of soil and rock units,
- Engineering properties of soil and rock units, such as unit weight, shear strength and compressibility,
- Groundwater conditions,
- Ground surface topography, and
- Local considerations, e.g., liquefiable, expansive or dispersive soil deposits, underground voids from solution weathering or mining activity, or slope instability potential.

Table 10.4.2-1 shall be used as a starting point for determining the locations of borings. The final exploration program should be adjusted based on the variability of the anticipated subsurface conditions as well as the variability observed during the exploration program. If conditions are determined to be variable, the exploration program should be increased relative to the requirements in Table 10.4.2-1 such that the objective of establishing a reliable longitudinal and transverse substrata profile is achieved. If conditions are observed to be homogeneous or otherwise are likely to have minimal impact on the foundation performance, and previous local geotechnical and construction experience has indicated that subsurface conditions are homogeneous or otherwise are likely to have minimal impact on the foundation performance, a reduced exploration program relative to what is specified in Table 10.4.2-1 may be considered.

If requested by the Owner or as required by law, boring and penetration test holes shall be plugged.

Laboratory and/or in-situ tests shall be performed to determine the strength, deformation, and permeability characteristics of soils and/or rocks and their suitability for the foundation proposed.

This Table should be used only as a first step in estimating the number of borings for a particular design, as actual boring spacings will depend upon the project type and geologic environment. In areas underlain by heterogeneous soil deposits and/or rock formations, it will probably be necessary to drill more frequently and/or deeper than the minimum guidelines in Table 10.4.2-1 to capture variations in soil and/or rock type and to assess consistency across the site area. For situations where large diameter rock socketed shafts will be used or where drilled shafts are being installed in formations known to have large boulders, or voids such as in karstic or mined areas, it may be necessary to advance a boring at the location of each shaft. Even the best and most detailed subsurface exploration programs may not identify every important subsurface problem condition if conditions are highly variable. The goal of the subsurface exploration program, however, is to reduce the risk of such problems to an acceptable minimum.

In a laterally homogeneous area, drilling or advancing a large number of borings may be redundant, since each sample tested would exhibit similar engineering properties. Furthermore, in areas where soil or rock conditions are known to be very favorable to the construction and performance of the foundation type likely to be used, e.g., footings on very dense soil, and groundwater is deep enough to not be a factor, obtaining fewer borings than provided in Table 10.4.2-1 may be justified. In all cases, it is necessary to understand how the design and construction of the geotechnical feature will be affected by the soil and/or rock mass conditions in order to optimize the exploration.

Borings may need to be plugged due to requirements by regulatory agencies having jurisdiction and/or to prevent water contamination and/or surface hazards.

Parameters derived from field tests, e.g., driven pile resistance based on cone penetrometer testing, may also be used directly in design calculations based on empirical relationships. These are sometimes found to be more reliable than analytical calculations, especially in familiar ground conditions for which the empirical relationships are well established.

3

Table 10.4.2-1—Minimum Number of Exploration Points and Depth of Exploration (modified after Sabatini et al., 2002)

Application	Minimum Number of Exploration Points and Location of Exploration Points	Minimum Depth of Exploration
Retaining Walls	A minimum of one exploration point for each retaining wall. For retaining walls more than 100 ft in length, exploration points spaced every 100 to 200 ft with locations alternating from in front of the wall to behind the wall. For anchored walls, additional exploration points in the anchorage zone spaced at 100 to 200 ft. For soil-nailed walls, additional exploration points at a distance of 1.0 to 1.5 times the height of the wall behind the wall spaced at 100 to 200 ft.	Investigate to a depth below bottom of wall at least to a depth where stress increase due to estimated foundation load is less than ten percent of the existing effective overburden stress at that depth and between one and two times the wall height. Exploration depth should be great enough to fully penetrate soft highly compressible soils, e.g., peat, organic silt, or soft fine grained soils, into competent material of suitable bearing capacity, e.g., stiff to hard cohesive soil, compact dense cohesionless soil, or bedrock.
Shallow Foundations	For substructure, e.g., piers or abutments, widths less than or equal to 100 ft, a minimum of one exploration point per substructure. For substructure widths greater than 100 ft, a minimum of two exploration points per substructure. Additional exploration points should be provided if erratic subsurface conditions are encountered.<br ~~To reduce design and construction risk due to subsurface condition variability and the potential for construction claims, at least one exploration per shaft should be considered for large diameter shafts (e.g., greater than 5 ft in diameter), especially when shafts are socketed into bedrock.~~	Depth of exploration should be: • great enough to fully penetrate unsuitable foundation soils, e.g., peat, organic silt, or soft fine grained soils, into competent material of suitable bearing resistance, e.g., stiff to hard cohesive soil, or compact to dense cohesionless soil or bedrock ; • at least to a depth where stress increase due to estimated foundation load is less than ten percent of the existing effective overburden stress at that depth; and • if bedrock is encountered before the depth required by the second criterion above is achieved, exploration depth should be great enough to penetrate a minimum of 10 ft into the bedrock, but rock exploration should be sufficient to characterize compressibility of infill material of near-horizontal to horizontal discontinuities. Note that for highly variable bedrock conditions, or in areas where very large boulders are likely, more than 10 ft or rock core may be required to verify that adequate quality bedrock is present.
Deep Foundations	For substructure, e.g., bridge piers or abutments, widths less than or equal to 100 ft, a minimum of one exploration point per substructure. For substructure widths greater than 100 ft, a minimum of two exploration points per substructure. Additional exploration points should be provided if erratic subsurface conditions are encountered, especially for the case of shafts socketed into bedrock. To reduce design and construction risk due to subsurface condition variability and the potential for construction claims, at least one exploration per shaft should be considered for large diameter shafts (e.g., greater than 5 ft in diameter), especially when shafts are socketed into bedrock.	In soil, depth of exploration should extend below the anticipated pile or shaft tip elevation a minimum of 20 ft, or a minimum of two times the ~~maximum~~ minimum pile group dimension, whichever is deeper. All borings should extend through unsuitable strata such as unconsolidated fill, peat, highly organic materials, soft fine-grained soils, and loose coarse-grained soils to reach hard or dense materials. For piles bearing on rock, a minimum of 10 ft of rock core shall be obtained at each exploration point location to verify that the boring has not terminated on a boulder. For shafts supported on or extending into rock, a minimum of 10 ft of rock core, or a length of rock core equal to at least three times the shaft diameter for isolated shafts or two times the ~~maximum~~ minimum shaft group dimension, whichever is greater, shall be extended below the anticipated shaft tip elevation to determine the physical characteristics of rock within the zone of foundation influence. Note that for highly variable bedrock conditions, or in areas where very large boulders are likely, more than 10 ft or rock core may be required to verify that adequate quality bedrock is present.

4

10.4.3—Laboratory Tests – ***NO CHANGES – NOT SHOWN***

10.4.4—In-Situ Tests – ***NO CHANGES – NOT SHOWN***

10.4.5—Geophysical Tests – ***NO CHANGES- NOT SHOWN***

10.4.6—Selection of Design Properties

10.4.6.1—General – ***NO CHANGES – NOT SHOWN***

10.4.6.2—Soil Strength – ***NO CHANGES – NOT SHOWN***

10.4.6.3—Soil Deformation – ***NO CHANGES – NOT SHOWN***

10.4.6.4—Rock Mass Strength

The strength of intact rock material should be determined using the results of unconfined compression tests on intact rock cores~~, splitting tensile tests on intact rock cores, or point load strength tests on intact specimens of rock~~.

~~The rock should be classified using the rock mass rating system (RMR) as described in Table 10.4.6.4-1. For each of the five parameters in the Table, the relative rating based on the ranges of values provided should be evaluated. The rock mass rating (RMR) should be determined as the sum of all five relative ratings. The RMR should be adjusted in accordance with the criteria in Table 10.4.6.4-2. The rock classification should be determined in accordance with Table 10.4.6.4-3.~~ Except as noted for design of spread footings in rock, for a rock mass that contains a sufficient number of "randomly" oriented discontinuities such that it behaves as an isotropic mass, and thus its behavior is largely independent of the direction of the applied loads, the strength of the rock mass should first be classified using its geological strength index (GSI) as described in Figures 10.4.6.4-1 and 10.4.6.4-2 and then assessed using the Hoek-Brown failure criterion.

C10.4.6.4

Point load strength index tests may be used to assess intact rock compressive strength in lieu of a full suite of unconfined compression tests on intact rock cores provided that the point load test results are calibrated to unconfined compression strength tests. Point load strength index tests rely on empirical correlations to intact rock compressive strength. The correlation provided in the ASTM point load test procedure (ASTM D 5731) is empirically based and may not be valid for the specific rock type under consideration. Therefore, a site specific correlation with uniaxial compressive strength test results is recommended. Point load strength index tests should not be used for weak to very weak rocks (< 2200 psi /15 MPa).

~~Because of the importance of the discontinuities in rock, and the fact that most rock is much more discontinuous than soil~~Because the engineering behavior of rock is strongly influenced by the presence and characteristics of discontinuities, emphasis is placed on visual assessment of the rock and the rock mass. The application of a rock mass classification system essentially assumes that the rock mass contains a sufficient number of "randomly" oriented discontinuities such that it behaves as an isotropic mass, and thus its behavior is largely independent of the direction of the applied loads. It is generally not appropriate to use such classification systems for rock masses with well defined, dominant structural fabrics or where the orientation of discrete, persistent discontinuities controls behavior to loading.

The GSI was introduced by Hoek et al. (1995) and Hoek and Brown (1997), and updated by Hoek et al. (1998) to classify jointed rock masses. Marinos et al. (2005) provide a comprehensive summary of the applications and limitations of the GSI for jointed rock masses (Figure 10.4.6.4-1) and for heterogeneous rock masses that have been tectonically disturbed (Figure 10.4.6.4-2). Hoek et al. (2005) further distinguish heterogeneous sedimentary rocks that are not tectonically disturbed and provide several diagrams for determining GSI values for various rock mass conditions. In combination with rock type and uniaxial compressive strength of intact rock (q_u), GSI provides a practical means to assess rock mass strength and rock mass modulus for foundation design using the Hoek-Brown failure criterion (Hoek et al. 2002).

The design procedures for spread footings in rock provided in Article 10.6.3.2 have been developed using the rock mass rating (RMR) system. For design of foundations in rock in Articles 10.6.2.4 and 10.6.3.2, classification of the rock mass should be according to the RMR system. For additional information on the RMR system, see Sabatini et al. (2002).

Other methods for assessing rock mass strength, including in-situ tests or other visual systems that have proven to yield accurate results may be used in lieu of the specified method.

6

Table 10.4.6.4-1—Geomechanics Classification of Rock Masses

Parameter			Ranges of Values						
1	Strength of intact rock material	Point load strength index	>175 ksf	85–175 ksf	45–85 ksf	20–45 ksf	For this low range, uniaxial compressive test is preferred		
		Uniaxial compressive strength	>4320 ksf	2160–4320 ksf	1080–2160 ksf	520–1080 ksf	215–520 ksf	70–215 ksf	20–70 ksf
	Relative Rating		15	12	7	4	2	1	0
2	Drill core quality RQD		90% to 100%	75% to 90%		50% to 75%	25% to 50%		<25%
	Relative Rating		20	17		13	8		3
3	Spacing of joints		>10 ft	3–10 ft		1–3 ft	2 in.–1 ft		<2 in.
	Relative Rating		30	25		20	10		5
4	Condition of joints		• Very rough surfaces • Not continuous • No separation • Hard joint wall rock	• Slightly rough surfaces • Separation <0.05 in. • Hard joint wall rock		• Slightly rough surfaces • Separation <0.05 in. • Soft joint wall rock	• Slicken-sided surfaces or • Gouge <0.2 in. thick or • Joints open 0.05–0.2 in. • Continuous joints		• Soft gouge >0.2 in. thick or • Joints open >0.2 in. • Continuous joints
	Relative Rating		25	20		12	6		0
5	Groundwater conditions (use one of the three evaluation criteria as appropriate to the method of exploration)	Inflow per 30 ft tunnel length	None	<400 gal./hr.		400–2000 gal./hr.		>2000 gal./hr.	
		Ratio = joint water pressure/ major principal stress	0	0.0–0.2		0.2–0.5		>0.5	
		General Conditions	Completely Dry	Moist only (interstitial water)		Water under moderate pressure		Severe water problems	
	Relative Rating		10	7		4		0	

Table 10.4.6.4-2—Geomechanics Rating Adjustment for Joint Orientations

Strike and Dip Orientations of Joints		Very Favorable	Favorable	Fair	Unfavorable	Very Unfavorable
Ratings	Tunnels	0	–2	–5	–10	–12
	Foundations	0	–2	–7	–15	–25
	Slopes	0	–5	–25	–50	–60

7

~~**Table 10.4.6.4-3—Geomechanics Rock Mass Classes Determined from Total Ratings**~~

~~RMR Rating~~	~~100–81~~	~~80–61~~	~~60–41~~	~~40–21~~	~~<20~~
~~Class No.~~	~~I~~	~~II~~	~~III~~	~~IV~~	~~V~~
~~Description~~	~~Very good rock~~	~~Good rock~~	~~Fair rock~~	~~Poor rock~~	~~Very poor rock~~

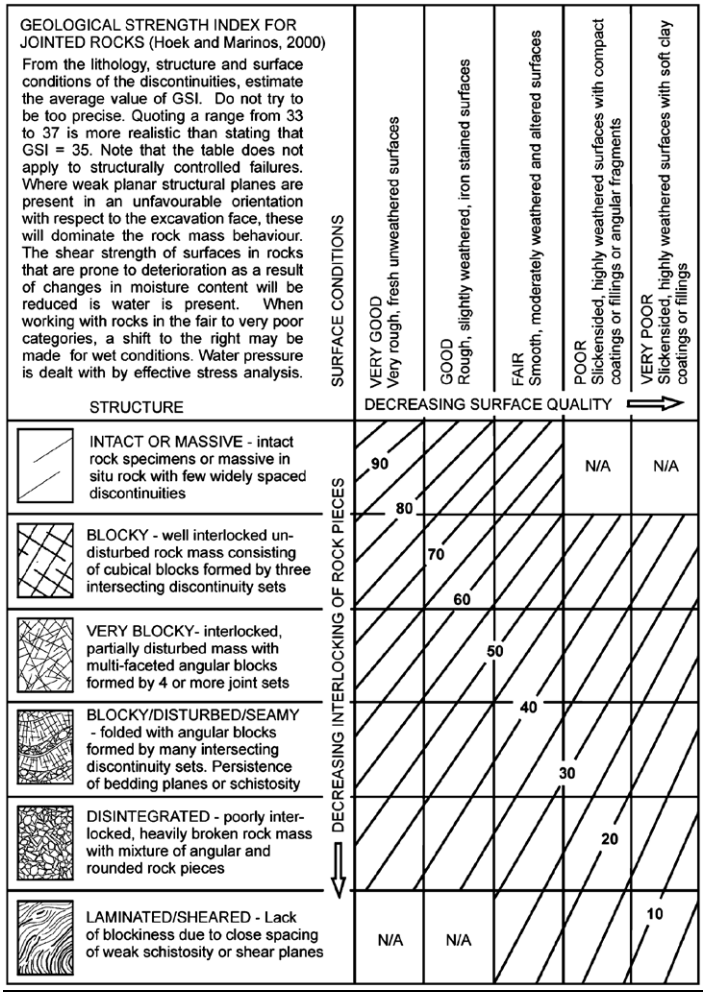

Figure 10.4.6.4-1—Determination of GSI for Jointed Rock Mass (Hoek and Marinos, 2000)

8

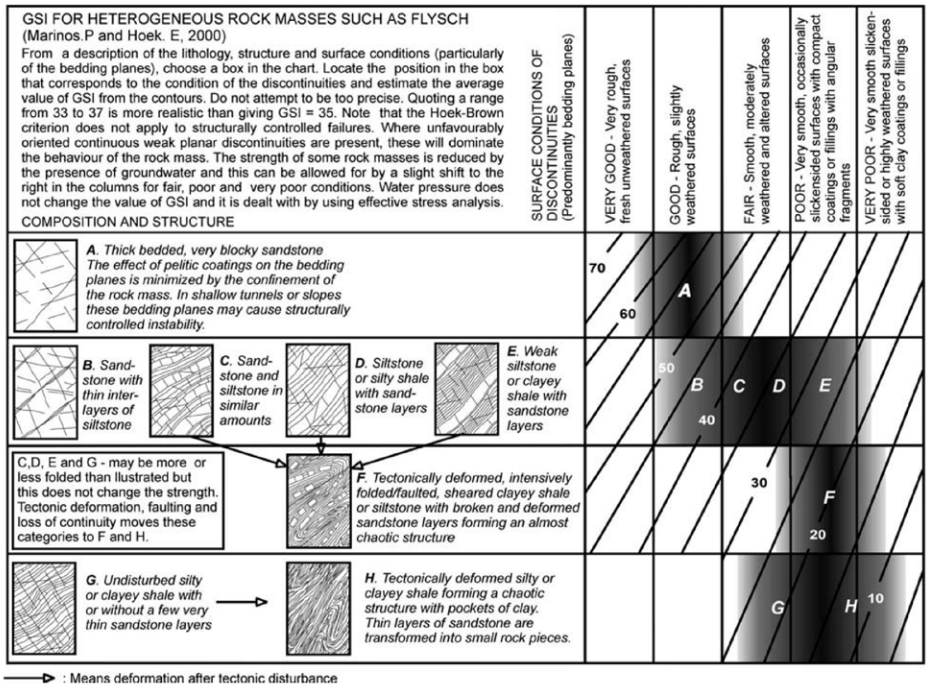

Figure 10.4.6.4-2—Determination of GSI for Tectonically Deformed Heterogeneous Rock Masses (Marinos and Hoek 2000)

The ~~shear~~ strength of ~~fractured~~jointed rock masses should be evaluated using the ~~Hoek and Brown~~ Hoek-Brown failure criterion (Hoek et al., 2002). This nonlinear strength criterion is expressed in its general form as: ~~criteria in which the shear strength is represented as a curved envelope that is a function of the uniaxial compressive strength of the intact rock, q_u, and two dimensionless constants m and s. The values of m and s as defined in Table 10.4.6.4-4 should be used.~~

~~The shear strength of the rock mass should be determined as:~~

$$\tau = \left(\cot \phi_i' - \cos \phi_i'\right) m \frac{q_u}{8} \qquad \text{(10.4.6.4-1)}$$

~~in which:~~

$$\phi_i' = \tan^{-1}\left\{4h \cos^2\left[30 + 0.33 \sin^{-1}\left(\frac{-3}{h^2}\right)\right] - 1\right\}^{\frac{-1}{2}}$$

$$h = 1 + \frac{16\left(m\sigma_n' + sq_u\right)}{\left(3m^2 q_u\right)}$$

~~This method was developed by Hoek (1983) and Hoek and Brown (1988, 1997). Note that the instantaneous cohesion at a discrete value of normal stress can be taken as:~~

$$c_i = \tau - \sigma_n' \tan \phi_i' \qquad \text{(C10.4.6.4-1)}$$

~~The instantaneous cohesion and instantaneous friction angle define a conventional linear Mohr envelope at the normal stress under consideration. For normal stresses significantly different than that used to compute the instantaneous values, the resulting shear strength will be unconservative. If there is considerable variation in the effective normal stress in the zone of concern, consideration should be given to subdividing the zone into areas where the normal stress is relative constant and assigning separate strength parameters to each zone. Alternatively, the methods of Hoek (1983) may be used to compute average values for the range of normal stresses expected.~~

9

~~where:~~

~~τ = the shear strength of the rock mass (ksf)~~

~~ϕ'_r = the instantaneous friction angle of the rock mass (degrees)~~

~~q_u = average unconfined compressive strength of rock core (ksf)~~

~~σ'_n = effective normal stress (ksf)~~

~~m, s = constants from Table 10.4.6.4-4 (dim)~~

$$\sigma'_1 = \sigma'_3 + q_u\left(m_b\frac{\sigma'_3}{q_u} + s\right)^a \qquad (10.4.6.4\text{-}1)$$

in which:

$$s = e^{\left(\frac{GSI-100}{9-3D}\right)} \qquad (10.4.6.4\text{-}2)$$

$$a = \frac{1}{2} + \frac{1}{6}\left(e^{\frac{-GSI}{15}} - e^{\frac{-20}{3}}\right) \qquad (10.4.6.4\text{-}3)$$

where:

e = 2.718 (natural or Naperian log base)

D = disturbance factor (dim)

σ'_1 and σ'_3 = principal effective stresses (ksf)

q_u = average unconfined compressive strength of rock core (ksf)

m_b, s, and a = empirically determined parameters

The value of the constant m_i should be estimated from Table 10.4.6.4-1, based on lithology. Relationships between GSI and the parameters m_b, s, and a, according to Hoek et al. (2002) are as follows:

$$m_b = m_i e^{\left(\frac{GSI-100}{28-14D}\right)} \qquad (10.4.6.4\text{-}4)$$

10

Table 10.4.6.4-4—Approximate Relationship between Rock-Mass Quality and Material Constants Used in Defining Nonlinear Strength (Hoek and Brown, 1988)

Rock Quality	Constants	Rock Type A = Carbonate rocks with well developed crystal cleavage—*dolomite, limestone and marble* B = Lithified argrillaceous rocks—*mudstone, siltstone, shale and slate (normal to cleavage)* C = Arenaceous rocks with strong crystals and poorly developed crystal cleavage—*sandstone and quartzite* D = Fine grained polyminerallic igneous crystalline rocks—*andesite, dolerite, diabase and rhyolite* E = Coarse grained polyminerallic igneous & metamorphic crystalline rocks—*amphibolite, gabbro gneiss, granite, norite, quartz diorite*				
		A	B	C	D	E
INTACT ROCK SAMPLES Laboratory size specimens free from discontinuities. CSIR rating: *RMR* = 100	*m* *s*	7.00 1.00	10.00 1.00	15.00 1.00	17.00 1.00	25.00 1.00
VERY GOOD QUALITY ROCK MASS Tightly interlocking undisturbed rock with unweathered joints at 3–10 ft CSIR rating: *RMR* = 85	*m* *s*	2.40 0.082	3.43 0.082	5.14 0.082	5.82 0.082	8.567 0.082
GOOD QUALITY ROCK MASS Fresh to slightly weathered rock, slightly disturbed with joints at 3–10 ft CSIR rating: *RMR* = 65	*m* *s*	0.575 0.00293	0.821 0.00293	1.231 0.00293	1.395 0.00293	2.052 0.00293
FAIR QUALITY ROCK MASS Several sets of moderately weathered joints spaced at 1–3 ft CSIR rating: *RMR* = 44	*m* *s*	0.128 0.00009	0.183 0.00009	0.275 0.00009	0.311 0.00009	0.458 0.00009
POOR QUALITY ROCK MASS Numerous weathered joints at 2 to 12 in.; some gouge. Clean compacted waste rock. CSIR rating: *RMR* = 23	*m* *s*	0.029 3×10^{-6}	0.041 3×10^{-6}	0.061 3×10^{-6}	0.069 3×10^{-6}	0.102 3×10^{-6}
VERY POOR QUALITY ROCK MASS Numerous heavily weathered joints spaced <2 in. with gouge. Waste rock with fines. CSIR rating: *RMR* = 3	*m* *s*	0.007 1×10^{-7}	0.010 1×10^{-7}	0.015 1×10^{-7}	0.017 1×10^{-7}	0.025 1×10^{-7}

11

Table 10.4.6.4-1—Values of the Constant m_i by Rock Group (after Marinos and Hoek 2000; with updated values from Rocscience, Inc., 2007)

Rock type	Class	Group	Texture			
			Coarse	Medium	Fine	Very fine
SEDIMENTARY	Clastic		Conglomerate (21 ± 3) Breccia (19 ± 5)	Sandstone 17 ± 4	Siltstone 7 ± 2 Greywacke (18 ± 3)	Claystone 4 ± 2 Shale (6 ± 2) Marl (7 ± 2)
	Non-Clastic	Carbonates	Crystalline Limestone (12 ± 3)	Sparitic Limestone (10 ± 5)	Micritic Limestone (8 ± 3)	Dolomite (9 ± 3)
		Evaporites		Gypsum 10 ± 2	Anhydrite 12 ± 2	
		Organic				Chalk 7 ± 2
METAMORPHIC	Non Foliated		Marble 9 ± 3	Hornfels (19 ± 4)) Metasandstone (19 ± 3)	Quartzite 20 ± 3	
	Slightly foliated		Migmatite (29 ± 3)	Amphibolite 26 ± 6	Gneiss 28 ± 5	
	Foliated*			Schist (10 ± 3)	Phyllite (7 ± 3)	Slate 7 ± 4
IGNEOUS	Plutonic	Light	Granite 32 ± 3 Granodiorite (29 ± 3)	Diorite 25 ± 5		
		Dark	Gabbro 27 ± 3 Norite 20 ± 5	Dolerite (16 ± 5)		
	Hypabyssal		Porphyries (20 ± 5)		Diabase (15 ± 5)	Peridotite (25 ± 5)
	Volcanic	Lava		Rhyolite (25 ± 5) Andesite 25 ± 5	Dacite (25 ± 3)) Basalt (25 ± 5)	
		Pyroclastic	Agglomerate (19 ± 3)	Volcanic breccia (19 ± 5)	Tuff (13 ± 5)	

Disturbance to the foundation excavation caused by the rock removal methodology should be considered through the disturbance factor D in Eqs. 10.4.6.4-2 through 10.4.6.4-4.

The disturbance factor, D, ranges from 0 (undisturbed) to 1 (highly disturbed), and is an adjustment for the rock mass disturbance induced by the excavation method. Suggested values for various tunnel and slope excavations can be found in Hoek et al. (2002). However, these values may not directly applicable to foundations. If using blasting techniques to remove the rock in a shaft foundation, due to its confined state, a disturbance factor approaching 1.0 should be considered, as the blast energy will tend to radiate laterally into the intact rock, potentially disturbing the rock. If using rock coring techniques, much less disturbance is likely and a disturbance factor approaching 0 may be considered. If using a down hole hammer to break up the rock, the disturbance factor is likely between these two extremes.

Where it is necessary to evaluate the strength of a single discontinuity or set of discontinuities, the strength along the discontinuity should be determined as follows:

- For smooth discontinuities, the shear strength is represented by a friction angle of the parent rock material. To evaluate the friction angle of this type of discontinuity surface for design, direct shear tests on samples should be performed. Samples should be formed in the laboratory by cutting samples of intact core or, if possible, on actual discontinuities using an oriented shear box.
- For rough discontinuities the nonlinear criterion of Barton (1976) should be applied or, if possible, direct shear tests should be performed on actual discontinuities using an oriented shear box.

The range of typical friction angles provided in Table C10.4.6.4-1 may be used in evaluating measured values of friction angles for smooth joints.

Table C10.4.6.4-1—Typical Ranges of Friction Angles for Smooth Joints in a Variety of Rock Types (modified after Barton, 1976; Jaeger and Cook, 1976)

Rock Class	Friction Angle Range	Typical Rock Types
Low Friction	20–27°	Schists (high mica content), shale, marl
Medium Friction	27–34°	Sandstone, siltstone, chalk, gneiss, slate
High Friction	34–40°	Basalt, granite, limestone, conglomerate

Note: Values assume no infilling and little relative movement between joint faces.

When a major discontinuity with a significant thickness of infilling is to be investigated, the shear strength will be governed by the strength of the infilling material and the past and expected future displacement of the discontinuity. Refer to Sabatini et al. (2002) for detailed procedures to evaluate infilled discontinuities.

10.4.6.5—Rock Mass Deformation

The elastic modulus of a rock mass (E_m) shall be taken as the lesser of the intact modulus of a sample of rock core (E_R) or the modulus determined from ~~one of the following equations:~~ Table 10.4.6.5-1.

C10.4.6.5

~~Table 10.4.6.5-1 was developed by O'Neill and Reese (1999) based on a reanalysis of the data presented by Carter and Kulhawy (1988) for the purposes of estimating side resistance of shafts in rock.~~ Methods for establishing design values of E_m include:

~~$E_m = 145\left(10^{\frac{RMR-10}{40}}\right)$ (10.4.6.5-1)~~

~~where:~~

~~E_m = Elastic modulus of the rock mass (ksi)~~

~~$E_m \leq E_i$~~

~~E_i = Elastic modulus of intact rock (ksi)~~

~~RMR = Rock mass rating specified in Article 10.4.6.4.~~

~~or~~

~~$E_m = \left(\frac{E_m}{E_i}\right) E_i$ (10.4.6.5-2)~~

~~where:~~

~~E_m = Elastic modulus of the rock mass (ksi)~~

~~E_m/E_i = Reduction factor determined from Table 10.4.6.5-1 (dim)~~

~~E_i = Elastic modulus of intact rock from tests (ksi)~~

For critical or large structures, determination of rock mass modulus (E_m) using in-situ tests ~~may be warranted~~ should be considered. Refer to Sabatini et al. (2002) for descriptions of suitable in-situ tests.

- Empirical correlations that relate E_m to strength or modulus values of intact rock (q_u or E_R) and GSI
- Estimates based on previous experience in similar rocks or back-calculated from load tests
- In-situ testing such as pressuremeter test

Empirical correlations that predict rock mass modulus (E_m) from GSI and properties of intact rock, either uniaxial compressive strength (q_u) or intact modulus (E_R), are presented in Table 10.4.6.5-1. The recommended approach is to measure uniaxial compressive strength and modulus of intact rock in laboratory tests on specimens prepared from rock core. Values of GSI should be determined for representative zones of rock for the particular foundation design being considered. The correlation equations in Table 10.4.6.5-1 should then be used to evaluate modulus and its variation with depth. If pressuremeter tests are conducted, it is recommended that measured modulus values be calibrated to the values calculated using the relationships in Table 10.4.6.5-1.

Preliminary estimates of the elastic modulus of intact rock may be made from Table C10.4.6.5-1. Note that some of the rock types identified in the Table are not present in the U.S.

It is extremely important to use the elastic modulus of the rock mass for computation of displacements of rock materials under applied loads. Use of the intact modulus will result in unrealistic and unconservative estimates.

~~**Table 10.4.6.5-1—Estimation of E_m Based on *RQD* (after O'Neill and Reese, 1999)**~~

~~*RQD* (percent)~~	~~E_m/E_i~~	
	~~Closed Joints~~	~~Open Joints~~

14

~~RQD (percent)~~	~~E_m/E_i~~	
	~~Closed Joints~~	~~Open Joints~~
~~100~~	~~1.00~~	~~0.60~~
~~70~~	~~0.70~~	~~0.10~~
~~50~~	~~0.15~~	~~0.10~~
~~20~~	~~0.05~~	~~0.05~~

Table 10.4.6.5-1—Estimation of E_m Based on GSI

Expression	Notes/Remarks	Reference
$E_m(GPa) = \sqrt{\frac{q_u}{100}} 10^{\frac{GSI-10}{40}}$ for $q_u \le 100$ MPa $E_m(GPa) = 10^{\frac{GSI-10}{40}}$ for $q_u > 100$ MPa	Accounts for rocks with $q_u < 100$ MPa; *note* q_u in MPa	Hoek and Brown (1997); Hoek et al. (2002)
$E_m = \frac{E_R}{100} e^{GSI/21.7}$	Reduction factor on intact modulus, based on GSI	Yang (2006)
Notes: E_R = modulus of intact rock, E_m = equivalent rock mass modulus, GSI = geological strength index, q_u = uniaxial compressive strength. 1 MPa = 20.9 ksf.		

Table C10.4.6.5-1—Summary of Elastic Moduli for Intact Rock (modified after Kulhawy, 1978)

Rock Type	No. of Values	No. of Rock Types	Elastic Modulus, ~~E_i~~ E_R (ksi $\times 10^3$)			Standard Deviation (ksi $\times 10^3$)
			Maximum	Minimum	Mean	
Granite	26	26	14.5	0.93	7.64	3.55
Diorite	3	3	16.2	2.48	7.45	6.19
Gabbro	3	3	12.2	9.8	11.0	0.97
Diabase	7	7	15.1	10.0	12.8	1.78
Basalt	12	12	12.2	4.20	8.14	2.60
Quartzite	7	7	12.8	5.29	9.59	2.32
Marble	14	13	10.7	0.58	6.18	2.49
Gneiss	13	13	11.9	4.13	8.86	2.31
Slate	11	2	3.79	0.35	1.39	0.96
Schist	13	12	10.0	0.86	4.97	3.18
Phyllite	3	3	2.51	1.25	1.71	0.57
Sandstone	27	19	5.68	0.09	2.13	1.19
Siltstone	5	5	4.76	0.38	2.39	1.65
Shale	30	14	5.60	0.001	1.42	1.45
Limestone	30	30	13.0	0.65	5.7	3.73
Dolostone	17	16	11.4	0.83	4.22	3.44

Poisson's ratio for rock should be determined from tests on intact rock core.

Where tests on rock core are not practical, Poisson's ratio may be estimated from Table C10.4.6.5-2.

15

Table C10.4.6.5-2—Summary of Poisson's Ratio for Intact Rock (modified after Kulhawy, 1978)

Rock Type	No. of Values	No. of Rock Types	Poisson's Ratio, ν			Standard Deviation
			Maximum	Minimum	Mean	
Granite	22	22	0.39	0.09	0.20	0.08
Gabbro	3	3	0.20	0.16	0.18	0.02
Diabase	6	6	0.38	0.20	0.29	0.06
Basalt	11	11	0.32	0.16	0.23	0.05
Quartzite	6	6	0.22	0.08	0.14	0.05
Marble	5	5	0.40	0.17	0.28	0.08
Gneiss	11	11	0.40	0.09	0.22	0.09
Schist	12	11	0.31	0.02	0.12	0.08
Sandstone	12	9	0.46	0.08	0.20	0.11
Siltstone	3	3	0.23	0.09	0.18	0.06
Shale	3	3	0.18	0.03	0.09	0.06
Limestone	19	19	0.33	0.12	0.23	0.06
Dolostone	5	5	0.35	0.14	0.29	0.08

10.4.6.6—Erodibility of Rock - ***NO CHANGES – NOT SHOWN***

10.5—LIMIT STATES AND RESISTANCE FACTORS

10.5.1—General – ***NO CHANGES – NOT SHOWN***

10.5.2—Service Limit States – ***NO CHANGES – NOT SHOWN***

10.5.3—Strength Limit States – ***NO CHANGES – NOT SHOWN***

10.5.4—Extreme Events Limit States – ***NO CHANGES – NOT SHOWN***

10.5.5—Resistance Factors

10.5.5.1—Service Limit States – ***NO CHANGES – NOT SHOWN***

10.5.5.2—Strength Limit States

10.5.5.2.1—General **- *NO CHANGES – NOT SHOWN***

10.5.5.2.2—Spread Footings **- *NO CHANGES – NOT SHOWN***

10.5.5.2.3—Driven Piles **- *NO CHANGES – NOT SHOWN***

10.5.5.2.4—Drilled Shafts

Resistance factors shall be selected based on the

C10.5.5.2.4

The resistance factors in Table 10.5.5.2.4-1 were

method used for determining the nominal shaft resistance. When selecting a resistance factor for shafts in clays or other easily disturbed formations, local experience with the geologic formations and with typical shaft construction practices shall be considered.

Where the resistance factors provided in Table 10.5.5.2.4-1 are to be applied to a single shaft supporting a bridge pier, the resistance factor values in the Table should be reduced by 20 percent. Where the resistance factor is decreased in this manner, the η_R factor provided in Article 1.3.4 shall not be increased to address the lack of foundation redundancy.

The number of static load tests to be conducted to justify the resistance factors provided in Table 10.5.5.2.4-1 shall be based on the variability in the properties and geologic stratification of the site to which the test results are to be applied. A site, for the purpose of assessing variability, shall be defined ~~in accordance with Article 10.5.5.2.3~~ as a project site, or a portion of it, where the subsurface conditions can be characterized as geologically similar in terms of subsurface stratification, i.e., sequence, thickness, and geologic history of strata, the engineering properties of the strata, and groundwater conditions.

developed using either statistical analysis of shaft load tests combined with reliability theory (Paikowsky et al., 2004), fitting to allowable stress design (ASD), or both. Where the two approaches resulted in a significantly different resistance factor, engineering judgment was used to establish the final resistance factor, considering the quality and quantity of the available data used in the calibration. The available reliability theory calibrations were conducted for the Reese and O'Neill (1988) method, with the exception of shafts in cohesive intermediate geo-materials (IGMs), in which case the O'Neill and Reese (1999) method was used. In Article 10.8, the O'Neill and Reese (1999) method is recommended. See Allen (2005) for a more detailed explanation on the development of the resistance factors for shaft foundation design, and the implications of the differences in these two shaft design methods on the selection of resistance factors.

~~The information in the commentary to Article 10.5.5.2.3 regarding the number of load tests to conduct considering site variability applies to drilled shafts as well.~~

For single shafts, lower resistance factors are specified to address the lack of redundancy. See Article C10.5.5.2.3 regarding the use of η_R.

Where installation criteria are established based on one or more static load tests, the potential for site variability should be considered. The number of load tests required should be established based on the characterization of site subsurface conditions by the field and laboratory exploration and testing program. One or more static load tests should be performed per site to justify the resistance factor selection ~~as discussed in Article C10.5.5.2.3, applied to drilled shafts installed within the site. See Article C10.5.5.2.3 for details on assessing site variability as applied to selection and use of load tests~~.

Site variability is the most important consideration in evaluating the limits of a site for design purposes. Defining the limits of a site therefore requires sufficient knowledge of the subsurface conditions in terms of general geology, stratigraphy, index and engineering properties of soil and rock, and groundwater conditions. This implies that the extent of the exploration program is sufficient to define the subsurface conditions and their variation across the site.

A designer may choose to design drilled shaft foundations for strength limit states based on a calculated nominal resistance, with the expectation that load testing results will verify that value. The question arises whether to use the resistance factor associated with the design equation or the higher value allowed for load testing. This choice should be based on engineering judgment. The potential risk is that axial resistance measured by load testing may be lower than the nominal resistance used for design, which could require increased shaft dimensions that may be problematic, depending upon the capability of the drilled shaft

equipment mobilized for the project and other project-specific factors.

For the specific case of shafts in clay, the resistance factor recommended by Paikowsky et al. (2004) is much lower than the recommendation from Barker et al. (1991). Since the shaft design method for clay is nearly the same for both the 1988 and 1999 methods, a resistance factor that represents the average of the two resistance factor recommendations is provided in Table 10.5.5.2.4-1. This difference may point to the differences in local geologic formations and local construction practices, pointing to the importance of taking such issues into consideration when selecting resistance factors, especially for shafts in clay.

Cohesive IGMs are materials that are transitional between soil and rock in terms of their strength and compressibility, such as ~~residual soils, glacial tills, or very weak rock. See Article C10.8.2.2.3 for a more detailed definition of an IGM.~~clay shales or mudstones with undrained shear strength between 5 and 50 ksf.

Since the mobilization of shaft base resistance is less certain than side resistance due to the greater deformation required to mobilize the base resistance, a lower resistance factor relative to the side resistance is provided for the base resistance in Table 10.5.5.2.4-1. O'Neill and Reese (1999) make further comment that the recommended resistance factor for tip resistance in sand is applicable for conditions of high quality control on the properties of drilling slurries and base cleanout procedures. If high quality control procedures are not used, the resistance factor for the O'Neill and Reese (1999) method for tip resistance in sand should be also be reduced. The amount of reduction should be based on engineering judgment.

Shaft compression load test data should be extrapolated to production shafts that are not load tested as specified in Article 10.8.3.5.6. There is no way to verify shaft resistance for the untested production shafts, other than through good construction inspection and visual observation of the soil or rock encountered in each shaft. Because of this, extrapolation of the shaft load test results to the untested production shafts may introduce some uncertainty. Statistical data are not available to quantify this at this time. Historically, resistance factors higher than 0.70, or their equivalent safety factor in previous practice, have not been used for shaft foundations. If the recommendations in Paikowsky, et al. (*2004*) are used to establish a resistance factor when shaft static load tests are conducted, in consideration of site variability, the resistance factors recommended by Paikowsky, et al. for this case should be reduced by 0.05, and should be less than or equal to 0.70 as specified in Table 10.5.5.2.4-1.

This issue of uncertainty in how the load test is applied to shafts not load tested is even more acute for shafts subjected to uplift load tests, as failure in uplift can be more abrupt than failure in compression. Hence, a resistance factor of 0.60 for the use of uplift load test

18

results is recommended.

19

Table 10.5.5.2.4-1—Resistance Factors for Geotechnical Resistance of Drilled Shafts

Method/Soil/Condition			Resistance Factor
Nominal Axial Compressive Resistance of Single-Drilled Shafts, φ_{stat}	Side resistance in clay	α-method (~~O'Neill and Reese, 1999~~ Brown et al., 2010)	0.45
	Tip resistance in clay	Total Stress (~~O'Neill and Reese, 1999~~ Brown et al., 2010)	0.40
	Side resistance in sand	β-method (~~O'Neill and Reese, 1999~~ Brown et al., 2010)	0.55
	Tip resistance in sand	~~O'Neill and Reese (1999)~~ Brown et al., (2010)	0.50
	Side resistance in cohesive IGMs	~~O'Neill and Reese (1999)~~ Brown et al., (2010)	0.60
	Tip resistance in cohesive IGMs	~~O'Neill and Reese (1999)~~ Brown et al., (2010)	0.55
	Side resistance in rock	~~Horvath and Kenney (1979)~~ ~~O'Neill and Reese (1999)~~ Kulhawy et al. (2005) Brown et al. (2010)	0.55
	Side resistance in rock	Carter and Kulhawy (1988)	0.50
	Tip resistance in rock	Canadian Geotechnical Society (1985) Pressuremeter Method (Canadian Geotechnical Society, 1985) ~~O'Neill and Reese (1999)~~Brown et al. (2010)	0.50
Block Failure, φ_{b1}	Clay		0.55
Uplift Resistance of Single-Drilled Shafts, φ_{up}	Clay	α-method (~~O'Neill and Reese, 1999~~ Brown et al., 2010)	0.35
	Sand	β-method (~~O'Neill and Reese, 1999~~ Brown et al., 2010)	0.45
	Rock	~~Horvath and Kenney (1979)~~ ~~O'Neill and Reese (1999)~~ Kulhawy et al. (2005) Brown et al. (2010)	0.40
Group Uplift Resistance, φ_{ug}	Sand and clay		0.45
Horizontal Geotechnical Resistance of Single Shaft or Shaft Group	All materials		1.0
Static Load Test (compression), φ_{load}	All Materials		0.70
Static Load Test (uplift), φ_{upload}	All Materials		0.60

10.5.5.2.5—Micropiles - ***NO CHANGES – NOT SHOWN***

10.5.5.3—Extreme Limit States – ***NO CHANGES – NOT SHOWN***

10.6—SPREAD FOOTINGS

10.6.1—General Considerations – ***NO CHANGES – NOT SHOWN***

10.6.2—Service Limit State Design

10.6.2.1—General – ***NO CHANGES – NOT SHOWN***

10.6.2.2—Tolerable Movements – ***NO CHANGES – NOT SHOWN***

10.6.2.3—Loads – ***NO CHANGES – NOT SHOWN***

10.6.2.4—Settlement Analyses

10.6.2.4.1—General - ***NO CHANGES – NOT SHOWN***

10.6.2.4.2—Settlement of Footings on Cohesionless Soils - ***NO CHANGES – NOT SHOWN***

10.6.2.4.3—Settlement of Footings on Cohesive Soils - ***NO CHANGES – NOT SHOWN***

10.6.2.4.4—Settlement of Footings on Rock

For footings bearing on fair to very good rock, according to the Geomechanics Classification system~~, as defined in Article 10.4.6.4,~~ and designed in accordance with the provisions of this Section, elastic settlements may generally be assumed to be less than 0.5 in. When elastic settlements of this magnitude are unacceptable or when the rock is not competent, an analysis of settlement based on rock mass characteristics shall be made.

Where rock is broken or jointed (relative rating of ten or less for *RQD* and joint spacing), the rock joint condition is poor (relative rating of ten or less) or the criteria for fair to very good rock are not met, a settlement analysis should be conducted, and the influence of rock type, condition of discontinuities, and degree of weathering shall be considered in the settlement analysis.

C10.6.2.4.4

In most cases, it is sufficient to determine settlement using the average bearing stress under the footing.

Where the foundations are subjected to a very large load or where settlement tolerance may be small, settlements of footings on rock may be estimated using elastic theory. The stiffness of the rock mass should be used in such analyses.

The accuracy with which settlements can be estimated by using elastic theory is dependent on the accuracy of the estimated rock mass modulus, E_m. In some cases, the value of E_m can be estimated through empirical correlation with the value of the modulus of elasticity for the intact rock between joints. For unusual or poor rock mass conditions, it may be necessary to determine the modulus from in-situ tests, such as plate loading and pressuremeter tests.

The elastic settlement of footings on broken or jointed rock, in feet, should be taken as:

- For circular (or square) footings:

$$\rho = q_o\left(1-\nu^2\right)\frac{rI_p}{144\,E_m} \qquad (10.6.2.4.4\text{-}1)$$

in which:

$$I_p = \frac{\left(\sqrt{\pi}\right)}{\beta_z} \qquad (10.6.2.4.4\text{-}2)$$

- For rectangular footings:

$$\rho = q_o\left(1-\nu^2\right)\frac{BI_p}{144\,E_m} \qquad (10.6.2.4.4\text{-}3)$$

in which:

$$I_p = \frac{\left(L/B\right)^{1/2}}{\beta_z} \qquad (10.6.2.4.4\text{-}4)$$

where:

q_o = applied vertical stress at base of loaded area (ksf)

ν = Poisson's Ratio (dim)

r = radius of circular footing or $B/2$ for square footing (ft)

I_p = influence coefficient to account for rigidity and dimensions of footing (dim)

E_m = rock mass modulus (ksi)

β_z = factor to account for footing shape and rigidity (dim)

Values of I_p should be computed using the β_z values presented in Table 10.6.2.4.2-1 for rigid footings. Where the results of laboratory testing are not available, values of Poisson's ratio, ν, for typical rock types may be taken as specified in Table C10.4.6.5-2. Determination of the rock mass modulus, E_m, should be based on the methods described in ~~Article 10.4.6.5~~ Sabatini (2002).

The magnitude of consolidation and secondary settlements in rock masses containing soft seams or other material with time-dependent settlement characteristics should be estimated by applying procedures specified in Article 10.6.2.4.3.

10.6.2.5—Overall Stability – ***NO CHANGES*** **–**

NOT SHOWN

10.6.2.6—Bearing Resistance at the Service Limit State

10.6.2.6.1—Presumptive Values for Bearing Resistance – ***NO CHANGES – NOT SHOWN***

10.6.2.6.2—Semiempirical Procedures for Bearing Resistance

Bearing resistance on rock shall be determined using empirical correlation to the Geomechanic Rock Mass Rating System, RMR~~, as specified in Article 10.4.6.4~~. Local experience should be considered in the use of these semi-empirical procedures.

If the recommended value of presumptive bearing resistance exceeds either the unconfined compressive strength of the rock or the nominal resistance of the concrete, the presumptive bearing resistance shall be taken as the lesser of the unconfined compressive strength of the rock or the nominal resistance of the concrete. The nominal resistance of concrete shall be taken as $0.3 f'_c$.

10.6.3—Strength Limit State Design

10.6.3.1—Bearing Resistance of Soil – ***NO CHANGES – NOT SHOWN***

10.6.3.2—Bearing Resistance of Rock

10.6.3.2.1—General

The methods used for design of footings on rock shall consider the presence, orientation, and condition of discontinuities, weathering profiles, and other similar profiles as they apply at a particular site.

For footings on competent rock, reliance on simple and direct analyses based on uniaxial compressive rock strengths and *RQD* may be applicable. For footings on less competent rock, more detailed investigations and analyses shall be performed to account for the effects of weathering and the presence and condition of discontinuities.

The designer shall judge the competency of a rock mass by taking into consideration both the nature of the intact rock and the orientation and condition of discontinuities of the overall rock mass. Where engineering judgment does not verify the presence of competent rock, the competency of the rock mass should be verified using the procedures for *RMR* rating ~~in Article 10.4.6.4~~.

10.6.3.2.2—Semiempirical Procedures - ***NO CHANGES – NOT SHOWN***

10.6.3.2.3—Analytic Method - ***NO CHANGES – NOT SHOWN***

C10.6.3.2.1

The design of spread footings bearing on rock is frequently controlled by either overall stability, i.e., the orientation and conditions of discontinuities, or load eccentricity considerations. The designer should verify adequate overall stability at the service limit state and size the footing based on eccentricity requirements at the strength limit state before checking nominal bearing resistance at both the service and strength limit states.

<u>The design procedures for foundations in rock have been developed using the RMR rock mass rating system. Classification of the rock mass should be according to the RMR system. For additional information on the RMR system, see Sabatini et al. (2002).</u>

10.6.3.2.4—Load Test - ***NO CHANGES – NOT SHOWN***

10.6.3.3—Eccentric Load Limitations – ***NO CHANGES – NOT SHOWN***

10.6.3.4—Failure by Sliding – ***NO CHANGES – NOT SHOWN***

10.6.4—Extreme Event Limit State Design – ***NO CHANGES – NOT SHOWN***

10.6.5—Structural Design – ***NO CHANGES – NOT SHOWN***

10.7—DRIVEN PILES – ***NO CHANGES – NOT SHOWN***

10.8—DRILLED SHAFTS

10.8.1—General

10.8.1.1—Scope - ***NO CHANGES – NOT SHOWN***

10.8.1.2—Shaft Spacing, Clearance, and Embedment into Cap - ***NO CHANGES – NOT SHOWN***

10.8.1.3—Shaft Diameter and Enlarged Bases - ***NO CHANGES – NOT SHOWN***

10.8.1.4—Battered Shafts - ***NO CHANGES – NOT SHOWN***

10.8.1.5—Drilled Shaft Resistance

Drilled shafts shall be designed to have adequate axial and structural resistances, tolerable settlements, and tolerable lateral displacements.

C10.8.1.5

The drilled shaft design process is discussed in detail in Drilled Shafts: Construction Procedures and Design Methods (~~O'Neill and Reese, 1999~~ Brown, et al., 2010).

The axial resistance of drilled shafts shall be determined through a suitable combination of subsurface investigations, laboratory and/or in-situ tests, analytical methods, and load tests, with reference to the history of past performance. Consideration shall also be given to:

- The difference between the resistance of a single shaft and that of a group of shafts;
- The resistance of the underlying strata to support the load of the shaft group;
- The effects of constructing the shaft(s) on adjacent structures;
- The possibility of scour and its effect;
- The transmission of forces, such as downdrag forces, from consolidating soil;
- Minimum shaft penetration necessary to satisfy the requirements caused by uplift, scour, downdrag, settlement, liquefaction, lateral loads and seismic conditions;
- Satisfactory behavior under service loads;
- Drilled shaft nominal structural resistance; and
- Long-term durability of the shaft in service, i.e., corrosion and deterioration.

Resistance factors for shaft axial resistance for the strength limit state shall be as specified in Table 10.5.5.2.4-1.

The method of construction may affect the shaft axial and lateral resistance. The shaft design parameters shall take into account the likely construction methodologies used to install the shaft.

The performance of drilled shaft foundations can be greatly affected by the method of construction, particularly side resistance. The designer should consider the effects of ground and groundwater conditions on shaft construction operations and delineate, where necessary, the general method of construction to be followed to ensure the expected performance. Because shafts derive their resistance from side and tip resistance, which is a function of the condition of the materials in direct contact with the shaft, it is important that the construction procedures be consistent with the material conditions assumed in the design. Softening, loosening, or other changes in soil and rock conditions caused by the construction method could result in a reduction in shaft resistance and an increase in shaft displacement. Therefore, evaluation of the effects of the shaft construction procedure on resistance should be considered an inherent aspect of the design. Use of slurries, varying shaft diameters, and post grouting can also affect shaft resistance.

Soil parameters should be varied systematically to model the range of anticipated conditions. Both vertical and lateral resistance should be evaluated in this manner.

Procedures that may affect axial or lateral shaft resistance include, but are not limited to, the following:

- Artificial socket roughening, if included in the design nominal axial resistance assumptions.
- Removal of temporary casing where the design is dependent on concrete-to-soil adhesion.
- The use of permanent casing.
- Use of tooling that produces a uniform cross-section where the design of the shaft to resist lateral loads cannot tolerate the change in stiffness if telescoped casing is used.

It should be recognized that the design procedures provided in these Specifications assume compliance to construction specifications that will produce a high quality shaft. Performance criteria should be included in the construction specifications that require:

- Shaft bottom cleanout criteria,
- Appropriate means to prevent side wall movement or failure (caving) such as temporary casing, slurry, or a combination of the two,
- Slurry maintenance requirements including minimum slurry head requirements, slurry testing requirements, and maximum time the shaft may be left open before concrete placement.

If for some reason one or more of these performance criteria are not met, the design should be reevaluated and the shaft repaired or replaced as necessary.

10.8.1.6—Determination of Shaft Loads

10.8.1.6.1—General - ***NO CHANGES – NOT SHOWN***

10.8.1.6.2—Downdrag

The provisions of Articles 10.7.1.6.2 and 3.11.8 shall apply for determination of load due to downdrag.

For shafts with tip bearing in a dense stratum or rock where design of the shaft is structurally controlled ~~and~~ downdrag shall be considered at the strength and extreme event limit states.

For shafts with tip bearing in soil, downdrag shall not be considered at the strength and extreme limit states if settlement of the shaft is less than failure criterion.

C10.8.1.6.2

See commentary to Articles ~~10.7.1.6.2 and~~ 3.11.8.

Downdrag loads may be estimated using the α-method, as specified in Article 10.8.3.5.1b, ~~for calculating~~ to calculate negative shaft ~~resistance~~ friction. As with positive shaft resistance, ~~the top 5.0 ft and a bottom length taken as one shaft diameters~~ shaft length assumed to not contribute to nominal side resistance should also be assumed to not contribute to downdrag loads.

When using the α-method, an allowance should be made for a possible increase in the undrained shear strength as consolidation occurs. Downdrag loads may also come from cohesionless soils above settling cohesive soils~~, requiring granular soil friction methods be used in such zones to estimate downdrag loads~~. The downdrag caused by settling cohesionless soils may be estimated using the β method presented in Article 10.8.3.5.2.

Downdrag occurs in response to relative downward deformation of the surrounding soil to that of the shaft, and may not exist if downward movement of the drilled shaft in response to axial compression forces exceeds the vertical deformation of the soil. The response of a drilled shaft to downdrag in combination with the other forces acting at the head of the shaft therefore is complex and a realistic evaluation of actual limit states that may occur requires careful consideration of two issues: (1) drilled shaft load-settlement behavior, and (2) the time period over which downdrag occurs relative to the time period over which nonpermanent components of load occur. When these factors are taken into account, it is appropriate to consider different downdrag forces for evaluation of geotechnical strength limit states than for structural strength limit states. These issues are addressed in Brown et al. (2010).

10.8.1.6.3—Uplift - ***NO CHANGES – NOT SHOWN***

10.8.2—Service Limit State Design

10.8.2.1—Tolerable Movements - ***NO CHANGES – NOT SHOWN***

10.8.2.2—Settlement

10.8.2.2.1—General - ***NO CHANGES – NOT***

SHOWN

10.8.2.2.2—Settlement of Single-Drilled Shaft

The settlement of single-drilled shafts shall be estimated ~~in consideration of~~ as a sum of the following:

- Short-term settlement resulting from load transfer,
- Consolidation settlement if constructed ~~in~~ where cohesive soils ~~exists beneath the shaft tip~~, and
- Axial compression of the shaft.

The normalized load-settlement curves shown in Figures 10.8.2.2.2-1 through 10.8.2.2.2-4 should be used to limit the nominal shaft axial resistance computed as specified for the strength limit state in Article 10.8.3 for service limit state tolerable movements. Consistent values of normalized settlement shall be used for limiting the base and side resistance when using these Figures. Long-term settlement should be computed according to Article 10.7.2 using the equivalent footing method and added to the short-term settlements estimated using Figures 10.8.2.2.2-1 through 10.8.2.2.2-4.

~~Other methods for evaluating shaft settlements that may be used are found in O'Neill and Reese (1999).~~

C10.8.2.2.2

O'Neill and Reese (1999) have summarized load-settlement data for drilled shafts in dimensionless form, as shown in Figures 10.8.2.2.2-1 through 10.8.2.2.2-4. These curves do not include consideration of long-term consolidation settlement for shafts in cohesive soils. Figures 10.8.2.2.2-1 and 10.8.2.2.2-2 show the load-settlement curves in side resistance and in end bearing for shafts in cohesive soils. Figures 10.8.2.2.2-3 and 10.8.2.2.2-4 are similar curves for shafts in cohesionless soils. These curves should be used for estimating short-term settlements of drilled shafts.

The designer should exercise judgment relative to whether the trend line, one of the limits, or some relation in between should be used from Figures 10.8.2.2.2-1 through 10.8.2.2.2-4.

The values of the load-settlement curves in side resistance were obtained at different depths, taking into account elastic shortening of the shaft. Although elastic shortening may be small in relatively short shafts, it may be substantial in longer shafts. The amount of elastic shortening in drilled shafts varies with depth. O'Neill and Reese (1999) have described an approximate procedure for estimating the elastic shortening of long-drilled shafts.

~~Settlements induced by loads in end bearing are different for shafts in cohesionless soils and in cohesive soils. Although drilled shafts in cohesive soils typically have a well-defined break in a load-displacement curve, shafts in cohesionless soils often have no well-defined failure at any displacement. The resistance of drilled shafts in cohesionless soils continues to increase as the settlement increases beyond five percent of the base diameter. The shaft end bearing R_p is typically fully mobilized at displacements of two to five percent of the base diameter for shafts in cohesive soils. The unit end bearing resistance for the strength limit state (see Article 10.8.3.3) is defined as the bearing pressure required to cause vertical deformation equal to five percent of the shaft diameter, even though this does not correspond to complete failure of the soil beneath the base of the shaft.~~

27

Induced settlements for isolated drilled shafts are different for elements in cohesive soils and in cohesionless soils. In cohesive soils, the failure threshold, or nominal axial resistance corresponds to mobilization of the full available side resistance, plus the full available base resistance. In cohesive soils, the failure threshold has been shown to occur at an average normalized deformation of 4 percent of the shaft diameter. In cohesionless soils, the failure threshold is the force corresponding to mobilization of the full side resistance, plus the base resistance corresponding to settlement at a defined failure criterion. This has been traditionally defined as the bearing pressure required to cause vertical deformation equal to 5 percent of the shaft diameter, even though this does not correspond to complete failure of the soil beneath the base of the shaft. Note that nominal base resistance in cohesionless soils is calculated according to the empirical correlation given by Eq. 10.8.3.5.2c-1 in terms of N-value. That relationship was developed using a base resistance corresponding to 5 percent normalized displacement. If a normalized displacement other than 5 percent is used, the base resistance calculated by Eq. 10.8.3.5.2c-1 must be corrected.

The curves in Figures 10.8.2.2.2-1 and 10.8.2.2.2-3 also show the settlements at which the side resistance is mobilized. The shaft skin friction R_s is typically fully mobilized at displacements of 0.2 percent to 0.8 percent of the shaft diameter for shafts in cohesive soils. For shafts in cohesionless soils, this value is 0.1 percent to 1.0 percent.

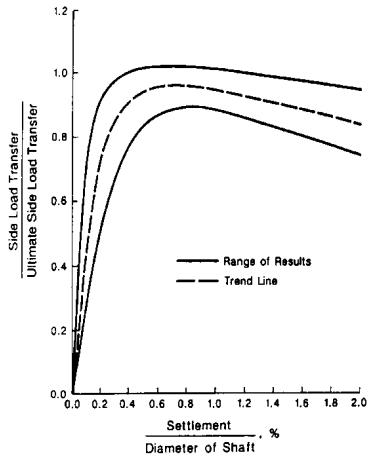

Figure 10.8.2.2.2-1 Normalized Load Transfer in Side Resistance versus Settlement in Cohesive Soils (from O'Neill and Reese, 1999)

28

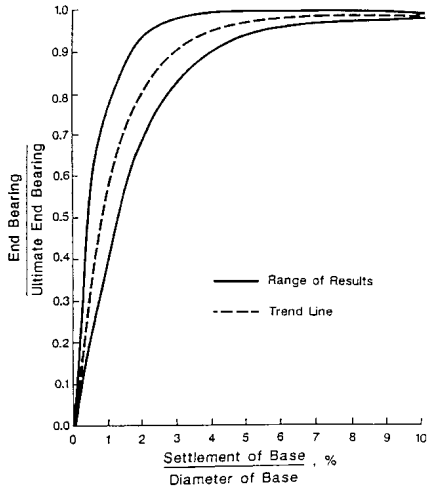

Figure 10.8.2.2.2-2—Normalized Load Transfer in End Bearing versus Settlement in Cohesive Soils (from O'Neill and Reese, 1999)

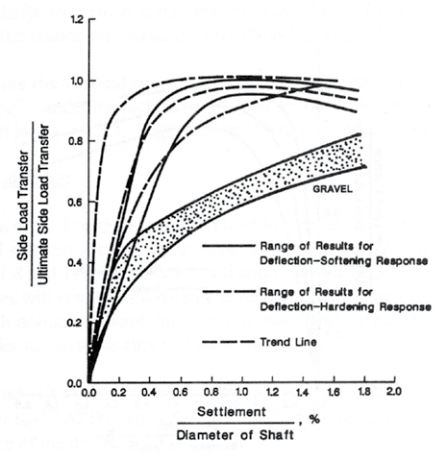

Figure 10.8.2.2.2-3—Normalized Load Transfer in Side Resistance versus Settlement in Cohesionless Soils (from O'Neill and Reese, 1999)

The deflection-softening response typically applies to cemented or partially cemented soils, or other soils that exhibit brittle behavior, having low residual shear strengths at larger deformations. Note that the trend line for sands is a reasonable approximation for either the deflection-softening or deflection-hardening response.

The normalized load-settlement curves require separate evaluation of an isolated drilled shaft for side and base resistance. Brown et al. (2010) provide alternate normalized load-settlement curves that may be used for estimation of settlement of a single drilled shaft considering combined side and base resistance. The method is based on modeling the average load deformation behavior observed from field load tests and incorporates the load test data used in development of the curves provided by O'Neill and Reese (1999). Additional methods that consider numerical simulations of axial load transfer and approximations based on elasto-plastic solutions are available in Brown et al. (2010).

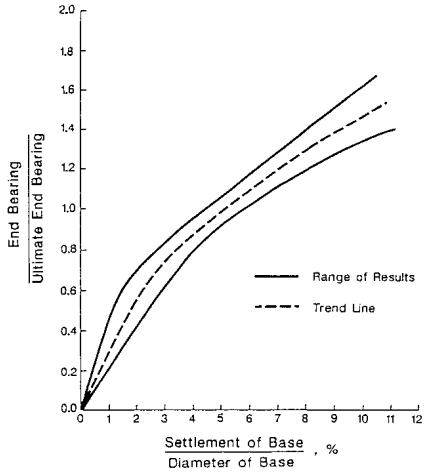

Figure 10.8.2.2.2-4—Normalized Load Transfer in End Bearing versus Settlement in Cohesionless Soils (from O'Neill and Reese, 1999)

10.8.2.2.3—Intermediate Geomaterials (IGMs)

For detailed settlement estimation of shafts in IGMs, the procedures ~~provided by O'Neill and Reese (1999)~~ described by Brown et al. (2010) should be used.

C10.8.2.2.3

IGMs are defined by ~~O'Neill and Reese (1999)~~ Brown et al. (2010) as follows:

- *Cohesive IGM*—clay shales or mudstones with an S_u of 5 to 50 ksf, and
- ~~*Cohesionless*—granular tills or granular residual soils with $N1_{60}$ greater than 50 blows/ft.~~

10.8.2.2.4—Group Settlement

The provisions of Article 10.7.2.3 shall apply. Shaft group effect shall be considered for groups of 2 shafts or more.

C10.8.2.2.4

See commentary to Article 10.7.2.3.

O'Neill and Reese (1999) summarize various studies on the effects of shaft group behavior. These studies were for groups that consisted of 1 × 2 to 3 × 3 shafts. These studies suggest that group effects are relatively unimportant for shaft center-to-center spacing of 5*D* or greater.

10.8.2.3—Horizontal Movement of Shafts and Shaft Groups

The provisions of Articles 10.5.2.1 and 10.7.2.4 shall apply.

For shafts socketed into rock, the input properties used to determine the response of the rock to lateral loading shall consider both the intact shear strength of the rock and the rock mass characteristics. The designer shall also consider the orientation and condition of discontinuities of the overall rock mass. Where specific adversely oriented discontinuities are not present, but the rock mass is fractured such that its intact strength is

C10.8.2.3

See commentary to Articles 10.5.2.1 and 10.7.2.4.

For shafts socketed into rock, approaches to developing p-y response of rock masses include both a weak rock response and a strong rock response. For the strong rock response, the potential for brittle fracture should be considered. If horizontal deflection of the rock mass is greater than 0.0004b, a lateral load test to evaluate the response of the rock to lateral loading should be considered. Brown et al. (2010) provide a

considered compromised, the rock mass shear strength parameters should be assessed using the procedures for *GSI* rating in Article 10.4.6.4. For lateral deflection of the rock adjacent to the shaft greater than 0.0004b, where b is the diameter of the rock socket, the potential for brittle fracture of the rock shall be considered.

summary of a methodology that may be used to estimate the lateral load response of shafts in rock. Additional background on lateral loading of shafts in rock is provided in Turner (2006).

These methods for estimating the response of shafts in rock subjected to lateral loading use the unconfined compressive strength of the intact rock as the main input property. While this property is meaningful for intact rock, and was the key parameter used to correlate to shaft lateral load response in rock, it is not meaningful for fractured rock masses. If the rock mass is fractured enough to justify characterizing the rock shear strength using the GSI, the rock mass should be characterized as a c-ϕ material, and confining stress (i.e., σ'_3) present within the rock mass should be considered when establishing a rock mass shear strength for lateral response of the shaft. If the P-y method of analysis is used to model horizontal resistance, user-specified P-y curves should be derived. A method for developing hyperbolic P-y curves is described by Liang et al. (2009).

10.8.2.4—Settlement Due to Downdrag - ***NO CHANGES – NOT SHOWN***

10.8.2.5—Lateral Squeeze - ***NO CHANGES – NOT SHOWN***

10.8.3—Strength Limit State Design

10.8.3.1—General - ***NO CHANGES – NOT SHOWN***

10.8.3.2—Groundwater Table and Buoyancy - ***NO CHANGES – NOT SHOWN***

10.8.3.3—Scour - ***NO CHANGES – NOT SHOWN***

10.8.3.4—Downdrag

~~The provisions of Article 10.7.3.7 shall apply.~~

The foundation should be designed so that the available factored axial geotechnical resistance is greater than the factored loads applied to the shaft, including the downdrag, at the strength limit state. The nominal shaft resistance available to support structure loads plus downdrag shall be estimated by considering only the positive skin and tip resistance below the lowest layer contributing to the downdrag. The drilled shaft shall be designed structurally to resist the downdrag plus structure loads.

C10.8.3.4

~~See commentary to Article 10.7.3.7.~~

The static analysis procedures in Article 10.8.3.5 may be used to estimate the available drilled shaft nominal side and tip resistances to withstand the downdrag plus other axial force effects.

Nominal resistance may also be estimated using an instrumented static load test provided the side resistance within the zone contributing to downdrag is subtracted from the resistance determined from the load test.

As stated in Article C10.8.1.6.2, ~~that~~ it is appropriate to apply different downdrag forces for evaluation of geotechnical strength limit states than for structural strength limit states. A drilled shaft with its tip bearing in stiff material, such as rock or hard soil, would be expected to limit settlement to very small values. In this case, the full downdrag force could occur in

combination with the other axial force effects, because downdrag will not be reduced if there is little or no downward movement of the shaft. Therefore, the factored force effects resulting from all load components, including full factored downdrag, should be used to check the structural strength limit state of the drilled shaft.

A rational approach to evaluating this strength limit state will incorporate the force effects occurring at this magnitude of downward displacement. This will include the factored axial force effects transmitted to the head of the shaft, plus the downdrag loads occurring at a downward displacement defining the failure criterion. In many cases, this amount of downward displacement will reduce or eliminate downdrag. For soil layers that undergo settlement exceeding the failure criterion (for example, 5% of B for shafts bearing in sand), downdrag loads are likely to remain and should be included. This approach requires the designer to predict the magnitude of downdrag load occurring at a specified downward displacement. This can be accomplished using the hand calculation procedure described in Brown et al. (2010) or with commercially available software.

When downdrag loads are determined to exist at a downward displacement defining failure, evaluation of drilled shafts for the geotechnical strength limit state in compression should be conducted under a load combination that is limited to permanent loads only, including the calculated downdrag load at a settlement defining the failure criterion, but excluding nonpermanent loads, such as live load, temperature changes, etc. See Brown et al. (2010) for further discussion.

When analysis of a shaft subjected to downdrag shows that the downdrag load would be eliminated in order to achieve a defined downward displacement, evaluation of geotechnical and structural strength limit states in compression should be conducted under the full load combination corresponding to the relevant strength limit state, including the non-permanent components of load, but not including downdrag.

10.8.3.5—Nominal Axial Compression Resistance of Single Drilled Shafts - *NO CHANGES – NOT SHOWN*

10.8.3.5.1—Estimation of Drilled Shaft Resistance in Cohesive Soils

10.8.3.5.1a—General - ***NO CHANGES – NOT SHOWN***

10.8.3.5.1b—Side Resistance

The nominal unit side resistance, q_s, in ksf, for shafts in cohesive soil loaded under undrained loading conditions by the α-Method shall be taken as:

C10.8.3.5.1b

The α-method is based on total stress. For effective stress methods for shafts in clay, see ~~O'Neill and Reese (1999)~~ Brown et al. (2010).

The adhesion factor is an empirical factor used to

$$q_s = \alpha S_u \qquad (10.8.3.5.1b\text{-}1)$$

in which:

$$\alpha = 0.55 \text{ for } \frac{S_u}{p_a} \le 1.5 \qquad (10.8.3.5.1b\text{-}2)$$

$$\alpha = 0.55 - 0.1\left(S_u / p_a - 1.5\right) \text{ for } 1.5 \le S_u / p_a \le 2.5 \qquad (10.8.3.5.1b\text{-}3)$$

where:

S_u = undrained shear strength (ksf)

α = adhesion factor (dim)

p_a = atmospheric pressure (= 2.12 ksf)

The following portions of a drilled shaft, illustrated in Figure 10.8.3.5.1b-1, should not be taken to contribute to the development of resistance through skin friction:

- At least the top 5.0 ft of any shaft;
- ~~For straight shafts, a bottom length of the shaft taken as the shaft diameter;~~
- Periphery of belled ends, if used; and
- ~~Distance above a belled end taken as equal to the shaft diameter.~~

When permanent casing is used, the side resistance shall be adjusted with consideration to the type and length of casing to be used, and how it is installed.

Values of α for contributing portions of shafts excavated dry in open or cased holes should be as specified in Eqs. 10.8.3.5.1b-2 and 10.8.3.5.1b-3.

correlate the results of full-scale load tests with the material property or characteristic of the cohesive soil. The adhesion factor is usually related to S_u and is derived from the results of full-scale pile and drilled shaft load tests. Use of this approach presumes that the measured value of S_u is correct and that all shaft behavior resulting from construction and loading can be lumped into a single parameter. Neither presumption is strictly correct, but the approach is used due to its simplicity.

Steel casing will generally reduce the side resistance of a shaft. No specific data is available regarding the reduction in skin friction resulting from the use of permanent casing relative to concrete placed directly against the soil. Side resistance reduction factors for driven steel piles relative to concrete piles can vary from 50 to 75 percent, depending on whether the steel is clean or rusty, respectively (Potyondy, 1961). Greater reduction in the side resistance may be needed if oversized cutting shoes or splicing rings are used.

If open-ended pipe piles are driven full depth with an impact hammer before soil inside the pile is removed, and left as a permanent casing, driven pile static analysis methods may be used to estimate the side resistance as described in Article 10.7.3.8.6.

The upper 5.0 ft of the shaft is ignored in estimating R_n, to account for the effects of seasonal moisture changes, disturbance during construction, cyclic lateral loading, and low lateral stresses from freshly placed concrete. ~~The lower 1.0 diameter length above the shaft tip or top of enlarged base is ignored due to the development of tensile cracks in the soil near these regions of the shaft and a corresponding reduction in lateral stress and side resistance.~~

Bells or underreams constructed in stiff fissured clay often settle sufficiently to result in the formation of a gap above the bell that will eventually be filled by slumping soil. Slumping will tend to loosen the soil immediately above the bell and decrease the side resistance along the lower portion of the shaft.

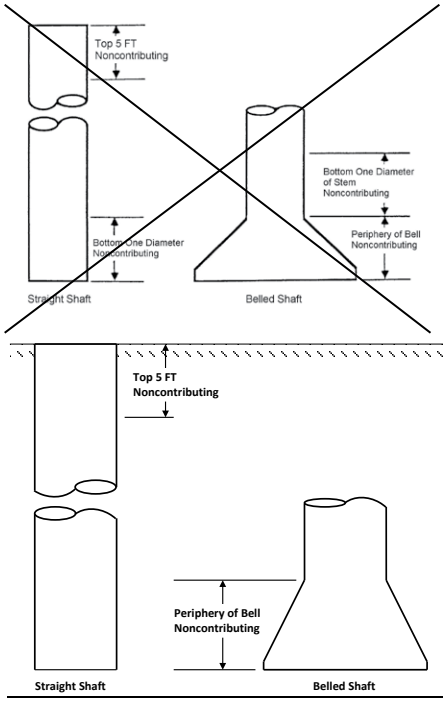

Figure 10.8.3.5.1b-1—Explanation of Portions of Drilled Shafts Not Considered in Computing Side Resistance (~~O'Neill and Reese, 1999~~ Brown et al., 2010)

10.8.3.5.1c—Tip Resistance

For axially loaded shafts in cohesive soil, the nominal unit tip resistance, q_p, by the total stress method as provided in ~~O'Neill and Reese (1999)~~ Brown et al. (2010) shall be taken as:

$$q_p = N_c S_u \le 80.0 \text{ ksf} \qquad (10.8.3.5.1c\text{-}1)$$

in which:

$$N_c = 6\left[1 + 0.2\left(\frac{Z}{D}\right)\right] \le 9 \qquad (10.8.3.5.1c\text{-}2)$$

where:

D = diameter of drilled shaft (ft)

Z = penetration of shaft (ft)

The value of α is often considered to vary as a function of S_u. Values of α for drilled shafts are recommended as shown in Eqs. 10.8.3.5.1b-2 and 10.8.3.5.1b-3, based on the results of back-analyzed, full-scale load tests. ~~This recommendation is based on eliminating the upper 5.0 ft and lower 1.0 diameter of the shaft length during back-analysis of load test results.~~ The load tests were conducted in insensitive cohesive soils. Therefore, if shafts are constructed in sensitive clays, values of α may be different than those obtained from Eqs. 10.8.3.5.1b-2 and 10.8.3.5.1b-3. Other values of α may be used if based on the results of load tests.

The depth of 5.0 ft at the top of the shaft may need to be increased if the drilled shaft is installed in expansive clay, if scour deeper than 5.0 ft is anticipated, if there is substantial groundline deflection from lateral loading, or if there are other long-term loads or construction factors that could affect shaft resistance.

~~A reduction in the effective length of the shaft contributing to side resistance has been attributed to horizontal stress relief in the region of the shaft tip, arising from development of outward radial stresses at the toe during mobilization of tip resistance. The influence of this effect may extend for a distance of 1*B* above the tip (O'Neill and Reese, 1999). The effectiveness of enlarged bases is limited when *L*/*D* is greater than 25.0 due to the lack of load transfer to the tip of the shaft.~~

The values of α obtained from Eqs. 10.8.3.5.1b-2 and 10.8.3.5.1b-3 are considered applicable for both compression and uplift loading.

C10.8.3.5.1c

These equations are for total stress analysis. For effective stress methods for shafts in clay, see ~~O'Neill and Reese (1999)~~ Brown et al. (2010).

The limiting value of 80.0 ksf for q_p is not a theoretical limit but a limit based on the largest measured values. A higher limiting value may be used if based on the results of a load test, or previous successful experience in similar soils.

S_u = undrained shear strength (ksf)

The value of S_u should be determined from the results of in-situ and/or laboratory testing of undisturbed samples obtained within a depth of 2.0 diameters below the tip of the shaft. If the soil within 2.0 diameters of the tip has S_u <0.50 ksf, the value of N_c should be multiplied by 0.67.

10.8.3.5.2—Estimation of Drilled Shaft Resistance in Cohesionless Soils

10.8.3.5.2a—General

Shafts in cohesionless soils should be designed by effective stress methods for drained loading conditions or by empirical methods based on in-situ test results.

C10.8.3.5.2a

The factored resistance should be determined in consideration of available experience with similar conditions.

~~Although many field load tests have been performed on drilled shafts in clays, very few have been performed on drilled shafts in sands.~~ The shear strength of cohesionless soils can be characterized by an angle of internal friction, ϕ_f, or empirically related to its *SPT* blow count, *N*. Methods of estimating shaft resistance and end bearing are presented below. Judgment and experience should always be considered.

10.8.3.5.2b—Side Resistance

~~The nominal axial resistance of drilled shafts in cohesionless soils by the β-method shall be taken as~~The side resistance for shafts in cohesionless soils shall be determined using the β method, take as:

~~$q_s = \beta\sigma'_v \leq 4.0$ for $0.25 \leq \beta \leq 1.2$ (10.8.3.5.2b-1)~~

~~in which, for sandy soils:~~

- ~~for $N_{60} \geq 15$:~~

~~$\beta = 1.5 - 0.135\sqrt{z}$ (10.8.3.5.2b-2)~~

- ~~for $N_{60} < 15$:~~

~~$\beta = \frac{N_{60}}{15}(1.5 - 0.135\sqrt{z})$ (10.8.3.5.2b-3)~~

~~where:~~

~~σ'_v = vertical effective stress at soil layer mid-depth (ksf)~~

~~β = load transfer coefficient (dim)~~

~~z = depth below ground, at soil layer mid-depth (ft)~~

C10.8.3.5.2b

~~O'Neill and Reese (1999) provide additional discussion of computation of shaft side resistance and recommend allowing β to increase to 1.8 in gravels and gravelly sands, however, they recommend limiting the unit side resistance to 4.0 ksf in all soils.~~

~~O'Neill and Reese (1999) proposed a method for uncemented soils that uses a different approach in that the shaft resistance is independent of the soil friction angle or the *SPT* blow count. According to their findings, the friction angle approaches a common value due to high shearing strains in the sand caused by stress relief during drilling.~~

~~N_{60} = average *SPT* blow count (corrected only for hammer efficiency) in the design zone under consideration (blows/ft)~~

~~Higher values may be used if verified by load tests.~~

~~For gravelly sands and gravels, Eq. 10.8.3.5.2b-4 should be used for computing β where $N_{60} \geq 15$. If $N_{60} < 15$, Eq. 10.8.3.5.2b-3 should be used.~~

~~$\beta = 2.0 - 0.06(z)^{0.75}$ (10.8.3.5.2b-4)~~

~~The detailed development of Eq. 10.8.3.5.2b-4 is provided in O'Neill and Reese (1999).~~

$q_s = \beta \sigma'_v$ (10.8.3.5.2b-1)

The method described herein is based on axial load tests on drilled shafts as presented by Chen and Kulhawy (2002) and updated by Kulhawy and Chen (2007). This method provides a rational approach for relating unit side resistance to N-values and to the state of effective stress acting at the soil-shaft interface. This approach replaces the previously used depth-dependent β-method developed by O'Neill and Reese (1999), which does not account for variations in N-value or effective stress on the calculated value of β. Further discussion, including the detailed development of Eq. 10.8.3.5.2b-2, is provided in (Brown et al. 2010).

in which:

$$\beta = \left(1 - \sin\varphi'_f\right)\left(\frac{\sigma'_p}{\sigma'_v}\right)^{\sin\varphi'_f} \tan\varphi'_f \qquad \text{(10.8.3.5.2b-2)}$$

where:

β = load transfer coefficient (dim)

φ'_f = friction angle of cohesionless soil layer (°)

σ'_p = effective vertical preconsolidation stress

σ'_v = vertical effective stress at soil layer mid-depth

The correlation for effective soil friction angle for use in the above equations shall be taken as:

$$\varphi'_f = 27.5 + 9.2\log\left[\left(N_1\right)_{60}\right] \qquad \text{(10.8.3.5.2b-3)}$$

where:

$(N_1)_{60}$ = SPT N-value corrected for effective overburden stress

The preconsolidation stress in Eq. 10.8.3.5.2b-2 should be approximated through correlation to SPT N-values. For sands:

$$\frac{\sigma'_p}{p_a} = 0.47\left(N_{60}\right)^m \qquad \text{(10.8.3.5.2b-4)}$$

where:

m = 0.6 for clean quartzitic sands

m = 0.8 for silty sand to sandy silts

p_a = atmospheric pressure (same units as σ'_p, 2.12 ksf or 14.7 psi)

For gravelly soils:

$$\frac{\sigma'_p}{p_a} = 0.15(N_{60}) \qquad \text{(10.8.3.5.2b-5)}$$

When permanent casing is used, the side resistance shall be adjusted with consideration to the type and length of casing to be used, and how it is installed.

Steel casing will generally reduce the side resistance of a shaft. No specific data is available regarding the reduction in skin friction resulting from the use of permanent casing relative concrete placed directly against the soil. Side resistance reduction factors for driven steel piles relative to concrete piles can vary from 50 to 75 percent, depending on whether the steel is clean or rusty, respectively (Potyondy, 1961). Casing reduction factors of 0.6 to 0.75 are commonly used. Greater reduction in the side resistance may be needed if oversized cutting shoes or splicing rings are used.

If open-ended pipe piles are driven full depth with an impact hammer before soil inside the pile is removed, and left as a permanent casing, driven pile static analysis methods may be used to estimate the side resistance as described in Article 10.7.3.8.6.

10.8.3.5.2c—Tip Resistance

C10.8.3.5.2c

The nominal tip resistance, q_p, in ksf, for drilled shafts in cohesionless soils by the ~~O'Neill and Reese (1999)~~ method described in Brown et al. (2010) shall be taken as:

~~for $N_{60} \le 50$, $q_p = 1.2N_{60}$~~ (10.8.3.5.2c-1)

$$\text{If } N_{60} \le 50, \text{ then } q_p = 1.2N_{60}$$

where:

N_{60} = average *SPT* blow count (corrected only for hammer efficiency) in the design zone under consideration (blows/ft)

The value of q_p in Eq. 10.8.3.5.2c-1 should be limited to 60 ksf, unless greater values can be justified though load test data.

~~Cohesionless soils with *SPT* N_{60} blow counts greater than 50 shall be treated as intermediate geomaterial (IGM) and the tip resistance, in ksf, taken as:~~

~~$$q_p = 0.59\left[N_{60}\left(\frac{p_a}{\sigma'_v}\right)\right]^{0.8}\sigma'_v \qquad \text{(10.8.3.5.2c-2)}$$~~

~~where:~~

~~p_a = atmospheric pressure (= 2.12 ksf)~~

~~σ'_v = vertical effective stress at the tip elevation of~~

~~O'Neill and Reese (1999)~~ Brown et al. (2010) provide additional discussion regarding the computation of nominal tip resistance and on tip resistance in specific geologic environments.

~~See O'Neill and Reese (1999) for background on IGMs.~~

~~the shaft (ksf)~~

~~N_{60} should be limited to 100 in Eq. 10.8.3.5.2c-2 if higher values are measured.~~

10.8.3.5.3—Shafts in Strong Soil Overlying Weaker Compressible Soil - ***NO CHANGES – NOT SHOWN***

10.8.3.5.4—Estimation of Drilled Shaft Resistance in Rock

10.8.3.5.4a—General

Drilled shafts in rock subject to compressive loading shall be designed to support factored loads in:

- Side-wall shear comprising skin friction on the wall of the rock socket; or
- End bearing on the material below the tip of the drilled shaft; or
- A combination of both.

The difference in the deformation required to mobilize skin friction in soil and rock versus what is required to mobilize end bearing shall be considered when estimating axial compressive resistance of shafts embedded in rock. Where end bearing in rock is used as part of the axial compressive resistance in the design, the contribution of skin friction in the rock shall be reduced to account for the loss of skin friction that occurs once the shear deformation along the shaft sides is greater than the peak rock shear deformation, i.e., once the rock shear strength begins to drop to a residual value.

C10.8.3.5.4a

Methods presented in this Article to calculate drilled shaft axial resistance require an estimate of the uniaxial compressive strength of rock core. Unless the rock is massive, the strength of the rock mass is most frequently controlled by the discontinuities, including orientation, length, and roughness, and the behavior of the material that may be present within the discontinuity, e.g., gouge or infilling. The methods presented are semi-empirical and are based on load test data and site-specific correlations between measured resistance and rock core strength.

Design based on side-wall shear alone should be considered for cases in which the base of the drilled hole cannot be cleaned and inspected or where it is determined that large movements of the shaft would be required to mobilize resistance in end bearing.

Design based on end-bearing alone should be considered where sound bedrock underlies low strength overburden materials, including highly weathered rock. In these cases, however, it may still be necessary to socket the shaft into rock to provide lateral stability.

Where the shaft is drilled some depth into sound rock, a combination of sidewall shear and end bearing can be assumed (Kulhawy and Goodman, 1980).

If the rock is degradable, use of special construction procedures, larger socket dimensions, or reduced socket resistance should be considered.

Factors that should be considered when making an engineering judgment to neglect any component of resistance (side or base) are discussed in Article 10.8.3.5.4d. In most cases, both side and base resistances should be included in limit state evaluation of rock-socketed shafts.

For drilled shafts installed in karstic formations, exploratory borings should be advanced at each drilled shaft location to identify potential cavities. Layers of compressible weak rock along the length of a rock socket and within approximately three socket diameters or more below the base of a drilled shaft may reduce the resistance of the shaft.

10.8.3.5.4b—Side Resistance

~~For drilled shafts socketed into rock, shaft resistance, in ksf, may be taken as (Horvath and Kenney, 1979):~~

$$q_s = 0.65\alpha_E p_a (q_u/p_a)^{0.5} < 7.8 p_a (f'_c/p_a)^{0.5} \quad \text{(10.8.3.5.4b-1)}$$

~~where:~~

~~q_u = uniaxial compressive strength of rock (ksf)~~

~~p_a = atmospheric pressure (= 2.12 ksf)~~

~~α_E = reduction factor to account for jointing in rock as provided in Table 10.8.3.5.4b-1~~

~~f'_c = concrete compressive strength (ksi)~~

~~Table 10.8.3.5.4b-1—Estimation of α_E (O'Neill and Reese, 1999)~~

~~E_m/E_i~~	~~α_E~~
~~1.0~~	~~1.0~~
~~0.5~~	~~0.8~~
~~0.3~~	~~0.7~~
~~0.1~~	~~0.55~~
~~0.05~~	~~0.45~~

For drilled shafts socketed into rock, unit side resistance, q_s in ksf, shall be taken as (Kulhawy et al., 2005):

$$\frac{q_S}{p_a} = C\sqrt{\frac{q_u}{p_a}} \quad \text{(10.8.3.5.4b-1)}$$

where:

For rock that is stronger than concrete, the concrete shear strength will control the available side friction, and the strong rock will have a higher stiffness, allowing significant end bearing to be mobilized before the side wall shear strength reaches its peak value. Note that concrete typically reaches its peak shear strength at about 250 to 400 microstrain (for a 10-ft long rock socket, this is approximately 0.5 in. of deformation at the top of the rock socket). If strains or deformations greater than the value at the peak shear stress are anticipated to mobilize the desired end bearing in the rock, a residual value for the skin friction can still be used. Article 10.8.3.5.4d provides procedures for computing a residual value of the skin friction based on the properties of the rock and shaft.

C10.8.3.5.4b

~~Eq. 10.8.3.5.4b-1 applies to the case where the side of the rock socket is considered to be smooth or where the rock is drilled using a drilling slurry. Significant additional shaft resistance may be achieved if the borehole is specified to be artificially roughened by grooving. Methods to account for increased shaft resistance due to borehole roughness are provided in Section 11 of O'Neill and Reese (1999).~~

~~Eq. 10.8.3.5.4b-1 should only be used for intact rock. When the rock is highly jointed, the calculated q_s should be reduced to arrive at a final value for design. The procedure is as follows:~~

~~Step 1. Evaluate the ratio of rock mass modulus to intact rock modulus, i.e., E_m/E_i, using Table C10.4.6.5-1.~~

~~Step 2. Evaluate the reduction factor, α_E, using Table 10.8.3.5.4b-1.~~

~~Step 3. Calculate q_s according to Eq. 10.8.3.5.4b-1.~~

- ~~———~~
- ~~———~~
- ~~———~~
- ~~———~~
- ~~———~~
- ~~———~~
- ~~———~~

Eq. 10.8.3.5.4b-1 is based on regression analysis of load test data as reported by Kulhawy et al. (2005) and includes data from pervious studies by Horvath and Kenney (1979), Rowe and Armitage (1987), Kulhawy and Phoon (1993), and others. The recommended value of the regression coefficient C = 1.0 is applicable to "normal" rock sockets, defined as sockets constructed with conventional equipment and resulting in nominally clean sidewalls without resorting to special procedures

p_a = atmospheric pressure taken as 2.12 ksf

C = regression coefficient taken as 1.0 for normal conditions

q_u = uniaxial compressive strength of rock (ksf)

If the uniaxial compressive strength of rock forming the sidewall of the socket exceeds the drilled shaft concrete compressive strength, the value of concrete compressive strength (f'_c) shall be substituted for q_u in Eq. 10.8.3.5.4b-1.

For fractured rock that caves and cannot be drilled without some type of artificial support, the unit side resistance shall be taken as:

$$\frac{q_S}{p_a} = 0.65\alpha_E\sqrt{\frac{q_u}{p_a}} \qquad (10.8.3.5.4b\text{-}2)$$

The joint modification factor, α_E is given in Table 10.8.3.5.4b-1 based on RQD and visual inspection of joint surfaces.

Table 10.8.3.5.4b-1—Estimation of α_E (O'Neill and Reese, 1999)

RQD (%)	Joint Modification Factor, α_E	
	Closed joints	Open or gouge-filled jo
100	1.00	0.85
70	0.85	0.55
50	0.60	0.55
30	0.50	0.50
20	0.45	0.45

10.8.3.5.4c—Tip Resistance

End-bearing for drilled shafts in rock may be taken as follows:

- If the rock below the base of the drilled shaft to a depth of 2.0B is either intact or tightly jointed, i.e., no compressible material or gouge-filled seams, and the depth of the socket is greater than 1.5B ~~(O'Neill and Reese, 1999)~~:

or artificial roughening. Rock that is prone to smearing or rapid deterioration upon exposure to atmospheric conditions, water, or slurry are outside the "normal" range and may require additional measures to insure reliable side resistance. Rocks exhibiting this type of behavior include clay shales and other argillaceous rocks. Rock that cannot support construction of an unsupported socket without caving is also outside the "normal" and will likely exhibit lower side resistance than given by Eq. 10.8.3.5.4b-1 with C = 1.0. For additional guidance on assessing the magnitude of C, see Brown, et al. (2010).

Shafts are sometimes constructed by supporting the hole with temporary casing or by grouting the rock ahead of the excavation. When using these construction methods, disturbance of the sidewall results in lower unit side resistances. Based on O'Neill and Reese (1999) and as discussed in Brown et al. (2010), the reduction in side resistance can be related empirically to the RQD and joint conditions.

C10.8.3.5.4c

If end bearing in the rock is to be relied upon, and wet construction methods are used, bottom clean-out procedures such as airlifts should be specified to ensure removal of loose material before concrete placement.

The use of Eq. 10.8.3.5.4c-1 also requires that there are no solution cavities or voids below the base of the drilled shaft.

$q_p = 2.5 q_u$ (10.8.3.5.4c-1)

- If the rock below the base of the shaft to a depth of $2.0B$ is jointed, the joints have random orientation, and the condition of the joints can be evaluated as:

~~$q_p = \left[\sqrt{s} + \sqrt{(m\sqrt{s} + s)}\right] q_u$ (10.8.3.5.4c-2)~~

~~where:~~

~~s, m = fractured rock mass parameters and are specified in Table 10.4.6.4-4~~

~~q_u = unconfined compressive strength of rock (ksf)~~

$$q_p = A + q_u\left[m_b\left(\frac{A}{q_u}\right) + s\right]^a \quad \text{(10.8.3.5.4c-2)}$$

In which:

$$A = \sigma'_{vb} + q_u\left[m_b\frac{\left(\sigma'_{v,b}\right)}{q_u} + s\right]^a \quad \text{(10.8.3.5.4c-3)}$$

where:

σ'_{vb} = vertical effective stress at the socket bearing elevation (tip elevation)

s, a, and m_b = Hoek-Brown strength parameters for the fractured rock mass determined from GSI (see Article 10.4.6.4)

q_u = uniaxial compressive strength of intact rock

Eq. 10.8.3.5.4c-1 should be used as an upper-bound limit to base resistance calculated by Eq. 10.8.2.5.4c-2, unless local experience or load tests can be used to validate higher values.

10.8.3.5.4d—Combined Side and Tip Resistance

Design methods that consider the difference in shaft movement required to mobilize skin friction in rock versus what is required to mobilize end bearing~~, such as the methodology provided by O'Neill and Reese (1999),~~ shall be used to estimate axial compressive resistance of shafts embedded in rock.

For further information see ~~O'Neill and Reese (1999)~~Brown et al. (2010).

~~Eq. 10.8.3.5.4c-2 is a lower bound solution for bearing resistance for a drilled shaft bearing on or socketed in a fractured rock mass. This method is appropriate for rock with joints that are not necessarily oriented preferentially and the joints may be open, closed, or filled with weathered material. Load testing will likely indicate higher tip resistance than that calculated using Eq. 10.8.3.5.4c-2. Resistance factors for this method have not been developed and must therefore be estimated by the designer.~~ Bearing capacity theory provides a framework for evaluation of base resistance for cases where the bearing rock can be characterized by its GSI. Eq. 10.8.3.5.4c-2 (Turner and Ramey, 2010) is a lower bound solution for bearing resistance of a drilled shaft bearing on or socketed into a fractured rock mass. Fractured rock describes a rock mass intersected by multiple sets of intersecting joints such that the strength is controlled by the overall mass response and not by failure along pre-existing structural discontinuities. This generally applies to rock that can be characterized by the descriptive terms shown in Figure 10.4.6.4-1 (*e.g.*, "blocky", "disintegrated", etc.).

C10.8.3.5.4d

~~Typically, the axial compression load on a shaft socketed into rock is carried solely in shaft side resistance until a total shaft movement on the order of 0.4 in. occurs.~~

~~Designs which consider combined effects of side friction and end-bearing of a drilled shaft in rock require that side friction resistance and end bearing resistance be evaluated at a common value of axial displacement, since maximum values of side friction~~

~~and end-bearing are not generally mobilized at the same displacement.~~

~~Where combined side friction and end-bearing in rock is considered, the designer needs to evaluate whether a significant reduction in side resistance will occur after the peak side resistance is mobilized. As indicated in Figure C10.8.3.5.4d-1, when the rock is brittle in shear, much shaft resistance will be lost as vertical movement increases to the value required to develop the full value of q_p. If the rock is ductile in shear, i.e., deflection softening does not occur, then the side resistance and end-bearing resistance can be added together directly. If the rock is brittle, however, adding them directly may be unconservative. Load testing or laboratory shear strength testing, e.g., direct shear testing, may be used to evaluate whether the rock is brittle or ductile in shear.~~

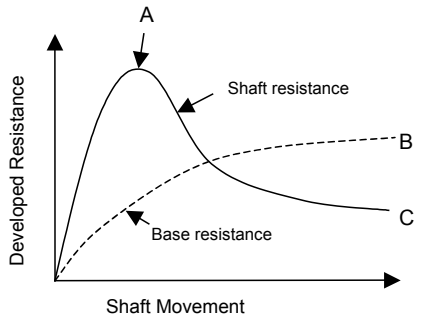

~~Figure C10.8.3.5.4d-1—Deflection Softening Behavior of Drilled Shafts under Compression Loading (after O'Neill and Reese, 1999).~~

~~The method used to evaluate combined side friction and end-bearing at the strength limit state requires the construction of a load-vertical deformation curve. To accomplish this, calculate the total load acting at the head of the drilled shaft, Q_{t1}, and vertical movement, w_{t1}, when the nominal shaft side resistance (Point *A* on Figure C10.8.3.5.4d-1) is mobilized. At this point, some end bearing is also mobilized. For detailed computational procedures for estimating shaft resistance in rock, considering the combination of side and tip resistance, see O'Neill and Reese (1999).~~

A design decision to be addressed when using rock sockets is whether to neglect one or the other component of resistance (side or base). For example, design based on side resistance alone is sometimes assumed for cases in which the base of the drilled hole cannot be cleaned and inspected or where it is determined that large downward movement of the shaft would be required to mobilize tip resistance. However, before making a decision to omit tip resistance, careful consideration should be given to applying available methods of quality construction and inspection that can provide confidence

in tip resistance. Quality construction practices can result in adequate clean-out at the base of rock sockets, including those constructed by wet methods. In many cases, the cost of quality control and assurance is offset by the economies achieved in socket design by including tip resistance. Load testing provides a means to verify tip resistance in rock.

Reasons cited for neglecting side resistance of rock sockets include (1) the possibility of strain-softening behavior of the sidewall interface (2) the possibility of degradation of material at the borehole wall in argillaceous rocks, and (3) uncertainty regarding the roughness of the sidewall. Brittle behavior along the sidewall, in which side resistance exhibits a significant decrease beyond its peak value, is not commonly observed in load tests on rock sockets. If there is reason to believe strain softening will occur, laboratory direct shear tests of the rock-concrete interface can be used to evaluate the load-deformation behavior and account for it in design. These cases would also be strong candidates for conducting field load tests. Investigating the sidewall shear behavior through laboratory or field testing is generally more cost-effective than neglecting side resistance in the design. Application of quality control and assurance through inspection is also necessary to confirm that sidewall conditions in production shafts are of the same quality as laboratory or field test conditions.

Materials that are prone to degradation at the exposed surface of the borehole and are prone to a "smooth" sidewall generally are argillaceous sedimentary rocks such as shale, claystone, and siltstone. Degradation occurs due to expansion, opening of cracks and fissures combined with groundwater seepage, and by exposure to air and/or water used for drilling. Hassan and O'Neill (1997) note that this behavior is most prevalent in cohesive IGM's and that in the most severe cases degradation results in a smear zone at the interface. Smearing may reduce load transfer significantly. As reported by Abu-Hejleh et al. (2003), both smearing and smooth sidewall conditions can be prevented in cohesive IGM's by using roughening tools during the final pass with the rock auger or by grooving tools. Careful inspection prior to concrete placement is required to confirm roughness of the sidewalls. Only when these measures cannot be confirmed would there be cause for neglecting side resistance in design.

Analytical tools for evaluating the load transfer behavior of rock socketed shafts are given in Turner (2006) and Brown et al. (2010).

10.8.3.5.5—Estimation of Drilled Shaft Resistance in Intermediate Geomaterials (IGMs)

For detailed base and side resistance estimation procedures for shafts in cohesive IGMs, the procedures

C10.8.3.5.5

See Article 10.8.2.2.3 for a definition of an IGM. ~~For convenience, since a common situation is to tip~~

provided by ~~O'Neill and Reese (1999)~~ Brown et al. (2010) should be used.

~~the shaft in a cohesionless IGM, the equation for tip resistance in a cohesionless IGM is provided in Article C10.8.3.5.2c.~~

10.8.3.5.6—Shaft Load Test - ***NO CHANGES – NOT SHOWN***

10.8.3.6—Shaft Group Resistance - ***NO CHANGES – NOT SHOWN***

10.8.3.7—Uplift Resistance - ***NO CHANGES – NOT SHOWN***

10.8.3.8—Nominal Horizontal Resistance of Shaft and Shaft Groups - ***NO CHANGES – NOT SHOWN***

10.8.3.9—Shaft Structural Resistance - ***NO CHANGES – NOT SHOWN***

10.8.4—Extreme Event Limit State

The provisions of Article 10.5.5.3 and 10.7.4 shall apply.

C10.8.4

See commentary to Articles 10.5.5.3 and 10.7.4.

10.9—MICROPILES – ***NO CHANGES – NOT SHOWN***

10.10—REFERENCES

AASHTO. 1988. *Manual on Subsurface Investigations*, First Edition, MSI-1. American Association of State Highway and Transportation Officials, Washington, DC.

AASHTO. 2002. *Standard Specifications for Highway Bridges*, 17th Edition, HB-17. American Association of State Highway and Transportation Officials, Washington, DC.

AASHTO. 2011. *AASHTO Guide Specifications for LRFD Seismic Design*, Second Edition, LRFDSEIS-2. American Association of State Highway and Transportation Officials, Washington, DC.

Allen, T. M. 2005. *Development of Geotechnical Resistance Factors and Downdrag Load Factors for LRFD Foundation Strength Limit State Design*, FHWA-NHI-05-052, Federal Highway Administration, U.S. Department of Transportation, Washington, DC.

Abu-Hejleh, N, M.W. O'Neill, D. Hannerman, and W.J. Atwoll. 2003. *Improvement of the Geotechnical Axial Design Methodology for Colorado's Drilled Shafts Socketed in Weak Rock*. Report No. CDOT-DTD-R-2003-6, Colorado Department of Transportation, Denver, 192 p.

Allen, T. M., 2005, *Development of Geotechnical Resistance Factors and Downdrag Load Factors for LRFD Foundation Strength Limit State Design*, Publication No. FHWA-NHI-05-052, Federal Highway Administration, Washington, DC, 41 pp.

Allen, T. M., 2007, "Development of New Pile-Driving Formula and Its Calibration for Load and Resistance Factor Design," *Transportation Research Record: Journal of the Transportation Research Board*, No. 2004, Transportation Research Board of the National Academies, Washington, D.C., pp. 20–27.

Arman, A., N. Samtani, R. Castelli, and G. Munfakh. 1997. *Subsurface Investigations: Training Course in Geotechnical and Foundation Engineering*, FHWA-HI-97-021. Federal Highway Administration, U.S. Department of Transportation, Washington, DC.

Ashour, M., G. M. Norris, and P. Pilling. 1998, "Lateral Loading of a Pile in Layered Soil Using the Strain Wedge Model," *ASCE Journal of Geotechnical and Geoenvironmental Engineering*. American Society of Civil Engineers, Reston, VA, Vol. 124, No. 4, pp. 303–315.

ASTM D 5731-07, *Standard Test Method for Determination of the Point Load Strength Index of Rock and Application to Rock Strength Classifications*.

ASTM D6429, *Standard Guide for Selecting Surface Geophysical Methods*

Baguelin, F., J. F. Jezequel, and D. H. Shields. 1987. *The Pressuremeter and Foundation Engineering*. Trans Tech Publications, Clausthal-Zellerfeld, Germany, p. 617.

Barkdale, R. D., and R. C. Bachus. 1983. *Design and Construction of Stone Columns—Vol. 1*, FHWA/RD-83/02C. Federal Highway Administration, U.S. Department of Transportation, Washington, DC.

Barker, R. M., J. M. Duncan, K. B. Rojiani, P. S. K. Ooi, C. K. Tan, and S. G. Kim. 1991. *Manuals for the Design of Bridge Foundations*. *NCHRP Report 343*. Transportation Research Board, National Research Council, Washington, DC.

Barton, N. R. 1976. "The Shear Strength of Rock and Rock Joints," *Engineering Geology*. Elsevier Science Publishing Company, Inc., New York, NY, Vol. 7, pp. 287–332.

Bieniawski, Z. T. 1984. *Rock Mechanics Design in Mining and Tunneling*. A. A. Balkema, Rotterdam/Boston, p. 272.

Bogard, J. D., and H. Matlock. 1990. "Application of Model Pile Tests to Axial Pile Design." In *Proc., 22nd Annual Offshore Technology Conference*, Houston, TX, Vol. 3, pp. 271–278.

Boulanger, R. W., and I. M. Idriss. 2006. "Liquefaction Susceptibility Criteria for Silts and Clays," *Journal of Geotechnical and Geoenvironmental Engineering*. American Society of Civil Engineers, Reston, VA, Vol. 132, No. 11, pp. 1413–1426.

Bowles, J. E. 1977. *Foundation Analysis and Design*, Second Edition. McGraw–Hill Book Company, New York, NY.

Bowles, J. E. 1988. *Foundation Analysis and Design*, 4th Edition. McGraw–Hill Book Company, New York, NY, p. 1004.

Bray, J. D., and R. B. Sancio. 2006. "Assessment of the Liquefaction Susceptibility of Fine-Grained Soils," *Journal of Geotechnical and Geoenvironmental Engineering*. American Society of Civil Engineers, Reston, VA, Vol. 132, No. 9, pp. 1165–1176.

Bray, J. D., R.B. Sancio, M. F. Riemer, and T. Durgunoglu. 2004. "Liquefaction Susceptibility of Fine-Grained Soils." In *Proc., 11th International Conference on Soil Dynamics and Earthquake Engineering and 3rd International Conference On Earthquake Geotechnical Engineering*, Berkeley, CA, January 2004, Doolin, Kammerer, Nogami, Seed and Towhata, Eds., Vol. 1, pp. 655–662.

Broms, B. B. 1964a. "Lateral Resistance of Piles in Cohesive Soil," *ASCE Journal for Soil Mechanics and Foundation Engineering*. American Society of Civil Engineers, Reston, VA, Vol. 90, SM2, pp. 27–63.

Broms, B.B. 1964b. "Lateral Resistance of Piles in Cohesionless Soil," *ASCE Journal for Soil Mechanics and Foundation Engineering*. American Society of Civil Engineers, Reston, VA, Vol. 90, SM3, pp. 123–156.

Campanella, R. G. 1994. "Field Methods for Dynamic Geotechnical Testing: An Overview of Capabilities and Needs." In *Dynamic Geotechnical Testing II,* Special Technical Publication No. 1213, American Society for Testing and Materials, Philadelphia, PA, pp. 3–23.

Brown, D.A., J.P. Turner, and R.J. Castelli, 2010 *Drilled Shafts: Construction Procedures and LRFD Design Methods – Geotechnical Engineering Circular No. 10*, FHWA NHI-10-016. National Highway Institute, Federal Highway Administration, U.S. Department of Transportation, Washington, DC.

Canadian Geotechnical Society. 1985. *Canadian Foundation Engineering Manual*, Second Edition. Bitech Publishers, Ltd., Vancouver, British Columbia, Canada, p. 460.

Carter, J. P., and F. H. Kulhawy. 1988. *Analysis and Design of Foundations Socketed into Rock*, Report No. EL-5918. Empire State Electric Engineering Research Corporation and Electric Power Research Institute, New York, NY, p. 158.

Cetin, K. O., R. B. Seed, A. Der Kiureghian, K. Tokimatsu, L. F, Harder, R. E. Kayen, and R. E. S. Moss. 2004. "Standard Penetration Test-Based Probabilistic and Deterministic Assessment of Seismic Soil Liquefaction Potential," *Journal of Geotechnical and Geoenvironmental Engineering*. American Society of Civil Engineers, Reston, VA, Vol. 130, No. 12, pp. 1314–1340.

Chen, Y-J, and F.H. Kulhawy, 2002. "Evaluation of Drained Axial Capacity for Drilled Shafts," *Geotechnical Special Publication No. 116, Deep Foundations 2002*. ASCE, Reston, VA, pp. 1200-1214.

Cheney, R. and R. Chassie. 2000. *Soils and Foundations Workshop Reference Manual*, NHI-00-045. National Highway Institute, Federal Highway Administration, U.S. Department of Transportation, Washington, DC.

Davisson, M. T. 1972. "High Capacity Piles." *Proceedings Lecture Series, Innovations in Foundation Construction*, Illinois Section, American Society of Civil Engineers, Reston, VA.

Davisson, M. T., and K. E. Robinson. 1965. "Bending and Buckling of Partially Embedded Piles." In *Proc., Sixth International Conference S. M. and F. E*. University of Toronto Press, Montreal, Canada, pp. 243–246.

DiMillio, A. F. 1982. *Performance of Highway Bridge Abutments Supported by Spread Footings on Compacted Fill*, FHWA/RD-81/184 (NTIS PB83-201822). FHWA Staff Study.

Duncan, J. M., and A. L. Buchignani. 1976. *An Engineering Manual for Settlement Studies*. Department of Civil Engineering, University of California at Berkley, Berkley, CA, p. 94. Geotechnical engineering report.

Duncan, J. M. 2000. "Factors of Safety and Reliability in Geotechnical Engineering," *Journal of Geotechnical and Geoenvironmental Engineering*. American Society of Civil Engineers, Reston, VA, Vol. 126, No. 4, pp. 307–316.

Elias, V. 1990. Durability/*Corrosion of Soil Reinforced Structures*, FHWA/R-89/186. Federal Highway Administration, U.S. Department of Transportation, Washington, DC, p. 173.

Elias, V., J. Welsh, J. Warren, and R. Lukas. 2000. *Ground Improvement Technical Summaries—Vols. 1 and 2*, Demonstration Project 116, FHWA-SA-98-086. Federal Highway Administration, U.S. Department of Transportation, Washington, DC.

EPRI. 1983. *Transmission Line Structure Foundations for Uplift-Compression Loading*, EL-2870. Electric Power Research Institute, Palo Alto, CA.

Esrig, M. E., and R. C. Kirby. 1979. "Advances in General Effective Stress Method for the Prediction of Axial Capacity for Driven Piles in Clay." In *Proc., 11th Annual Offshore Technology Conference*, pp. 437–449.

Fang, H. Y. 1991. *Foundation Engineering Handbook*, Second Edition. Van Nostrand Reinhold, New York, NY.

Gifford, D. G., J. R. Kraemer, J. R. Wheeler, and A. F. McKown. 1987. Spread *Footings for Highway Bridges,* FHWA/RD-86/185. Federal Highway Administration, U.S. Department of Transportation, Washington, DC, p. 229.

Goodman, R. E. 1989. "Introduction." In *Rock Mechanics*, Second Edition, John Wiley and Sons, Inc., New York, NY, p. 562.

Hannigan, P. J., G. G. Goble, G. Thendean, G. E. Likins, and F. Rausche. 2006. *Design and Construction of Driven Pile Foundations*, FHWA-NHI-05-042 and NHI-05-043, Federal Highway Administration, U.S. Department of Transportation, Washington, D.C., Vols. I and II.

Hansen, B. J. 1970. "A Revised and Extended Formula for Bearing Capacity," *Bulletin.* Danish Geotechnical Institute, Copenhagen, Vol. 28.

Hara, A., T. Ohta, M. Niwa, S. Tanaka, and T. Banno. 1974. "Shear Modulus and Shear Strength of Cohesive Soils," *Soils and Foundations*. Vol. 14, No. 3, pp. 1–12.

Hassan, K.M. and M.W. O'Neill. 1997. "Side Load-Transfer Mechanisms in Drilled Shafts in soft Argillaceous Rock," *Journal of Geotechnical And Geoenvironmental Engineering,* Vol. 123, No. 2, ASCE, pp.272-280.

~~Hoek, E. 1983. "Strength of Jointed Rock Masses," *Geotechnique*. Thomas Telford Ltd., London, Vol. 33, No. 3, pp. 187–223.~~

~~Hoek, E., and E. T. Brown. 1988. "The Hoek-Brown Failure Criterion—A 1988 Update." In *Proc., 15th Canadian Rock Mechanics Symposium*, Toronto, Canada.~~

Hoek, E., and E. T. Brown. 1997. "Practical Estimates of Rock Mass Strength," *International Journal of Rock Mechanics and Mining Sciences.* Available at http://www.rocscience.com/.

Hoek, E., P.K.Kaiser, and W.F. Bawden. 1995. *Support of Underground Excavations in Hard Rock*. AA Balkema, Rotterdam, 215 p.

Hoek E, P. Marinos, and M. Benissi. 1998. "Applicability of the Geological Strength Index (GSI) Classification for Weak and Sheared Rock Masses—The Case of the Athens Schist Formation." *Bulletin of Engineering Geology and the Environment*, Vol. 57, pp. 151–160.

Hoek, E. and P. Marinos. 2000. Prediciting tunnel squeezing problems in weak heterogeneous rock masses, *Tunnels and Tunneling International*, pp. 1-21.

Hoek, E., C. Carranza-Torres, and B. Corkum. 2002. "Hoek-Brown Failure Criterion – 2002 Edition," In *Proc., North American Rock Mechanics Society Meeting*. Toronto, Canada

Hoek, E., P. Marinos and V. Marinos. 2005. "Characterization and Engineering Properties of Tectonically Undisturbed but Lithologically Varied Sedimentary Rock Masses." *International Journal of Rock Mechanics and Mining Sciences*, Vol. 42, pp. 277-285.

Holtz, R. D., and W. D. Kovacs. 1981. *An Introduction to Geotechnical Engineering*. Prentice–Hall, Englewood Cliffs, NJ.

Horvath, R. G., and T. C. Kenney. 1979. "Shaft Resistance of Rock Socketed Drilled Piers." In *Proc., Symposium on Deep Foundations*. American Society of Civil Engineers, Atlanta, GA, pp. 182–214.

Hough, B. K. 1959. "Compressibility as the Basis for Soil Bearing Value," *Journal of the Soil Mechanics and Foundations Division*. American Society of Civil Engineers, Reston, VA, Vol. 85, Part 2.

Jaeger, J. C., and N. G. W. Cook. 1976. *Fundamentals of Rock Mechanics*. Chapman & Hall, London.

Janbu, N. 1963. "Soil Compressibility as Determined By Oedometer and Triaxial Tests." In *Proc, 3rd European Conference of Soil Mechanics and Foundation Engineering*. Wiesbaden, Germany, Vol. 1.

Janbu, N. 1967. "Settlement Calculations Based on Tangent Modulus Concept," *Bulletin No. 2, Soil Mechanics and Foundation Engineering Series*. The Technical University of Norway, Trondheim, Norway, p. 57.

Kavazanjian, E., Jr., T. Hadj-Hamou Matasoviæ, and P. J. Sabatini. 1997. *Geotechnical Engineering Circular No. 3, Design Guidance: Geotechnical Earthquake Engineering for Highways*, FHWA-SA-97-076, Federal Highway Administration, U.S. Department of Transportation, Washington, DC.

Kimmerling, R. E. 2002. *Geotechnical Engineering Circular 6, Shallow Foundations*, FHWA-SA-02-054, Federal Highway Administration, U.S. Department of Transportation, Washington, DC.

Komurka, V. E., A. B. Wagner, and T. B. Edil. 2003. *Estimating Soil/Pile Set-Up*, Wisconsin Highway Research Program #0092-00-14, Wisconsin Department of Transportation, Madison, WI.

Kramer, S. L. 1996. *Geotechnical Earthquake Engineering*, Prentice–Hall, Upper Saddle River, NJ.

Kulhawy, F. H. 1978. "Geomechanical Model for Rock Foundation Settlement," *Journal of the Geotechnical Engineering Division*. American Society of Civil Engineers, New York, NY, Vol. 104, No. GT2, pp. 211–227.

Kulhawy, F. H., and R. E. Goodman. 1980. "Design of Foundations on Discontinuous Rock." In *Proc., International Conference on Structural Foundations on Rock*, International Society for Rock Mechanics, Vol. I, pp. 209–220.

Kulhawy, F. H., and R. E. Goodman. 1987. "Foundations in Rock." In *Ground Engineering Reference Manual*, F. G. Bell, ed. Butterworths Publishing Co., London, Chapter 55.

Kulhawy, F.H. and K.K. Phoon. 1993. "Drilled Shaft Side Resistance in Clay Soil to Rock," *Geotechnical Special Publication No. 38: Design and Performance of Deep Foundations*, ASCE, New York, pp. 172-183.

Kulhawy, F.H., W.A. Prakoso, and S.O. Akbas. 2005. "Evaluation of Capacity of Rock Foundation Sockets," *Alaska Rocks 2005, Proceedings, 40th U.S. Symposium on Rock Mechanics,* American Rock Mechanics Association, Anchorage, AK, 8 p.

Kulhawy, F.H. and Y-R Chen. 2007. "Discussion of 'Drilled Shaft Side Resistance in Gravelly Soils' by Kyle M. Rollins, Robert J. Clayton, Rodney C. Mikesell, and Bradford C. Blaise," *Journal of Geotechnical and Geoenvironmental Engineering,* ASCE, Vol. 133, No. 10, pp. 1325-1328.

Kyfor, Z. G., A. R. Schnore, T. A. Carlo, and P. F. Bailey. 1992. *Static Testing of Deep Foundations*, FHWA-SA-91-042, Federal Highway Administration, Office of Technology Applications, U. S. Department of Transportation, Washington D. C., p. 174.

Lam, I. P, and G. R. Martin. 1986. "Design Procedures and Guidelines." In *Seismic Design of Highway Bridge Foundations*, FHWA/RD-86/102, Federal Highway Administration, U.S. Department of Transportation, Washington, DC, Vol. 2, p. 18.

Lambe, T.W. and R. V. Whitman. 1969. *Soil Mechanics.* New York, John Wiley and Sons, Inc.

Liang, R, K Yang and J Nusairat. 2009. "P-y Criterion for Rock Mass" *Journal of Geotechnical and Geoenvironmental Engineering,* ASCE, Vol 135, No. 1, pp. 26-36.

Lukas, R. G. 1995. *Geotechnical Engineering Circular No. 1—Dynamic Compaction*, FHWA-SA-95-037. Federal Highway Administration, U.S. Department of Transportation, Washington, DC.

Marinos, P. and E. Hoek. 2000. "GSI: A Geologically Friendly Tool for Rock Mass Strength Estimation," In *Proc., Geo-Engineering 2000, International Conference on Geotechncial and Geological Engineering.* Melbourne, Austrailia, pp. 1422-1440

Marinos, V., P. Marinos and E. Hoek. 2005. The Geological Strength index: applications and limitations, *Bulletin of Engineering Geology and the Environment*, Vol. 64, pp. 55-65.

Mayne, P. W., B. R.Christopher, and J. DeJong. 2001. *Manual on Subsurface Investigations*, FHWA NHI-01-031. Federal Highway Administration, U.S. Department of Transportation, Washington, D.C.

Meyerhof, G. G. 1953. "The Bearing Capacity of Foundations under Eccentric and Inclined Loads." In *Proc., 3rd International Conference on Soil Mechanics and Foundation Engineering*, Switzerland, pp. 440–445.

Meyerhof, G. G. 1956. "Penetration Tests and Bearing Capacity of Cohesionless Soils," *Journal of the Soil Mechanics and Foundation Division*. American Society of Civil Engineers, Reston, VA, Vol. 82, No. SM1, pp. 866-1–866-19.

Meyerhof, G. G. 1957. "The Ultimate Bearing Capacity of Foundations on Slopes." In *Proc., 4th International Conference on Soil Mechanics and Foundation Engineering*, London.

Meyerhof, G.G. 1976. "Bearing Capacity and Settlement of Pile Foundations," *Journal of the Geotechnical Engineering Division*. American Society of Civil Engineers, New York, NY, Vol. 102, No. GT3, pp. 196–228.

Morgano, C. M. and B. White. 2004. "Identifying Soil Relaxation from Dynamic Testing." In *Proc., 7th International Conference on the Application of Stresswave Theory to Piles 2004*, Petaling Jaya, Selangor, Malaysia.

Moulton, L. K., H. V. S. GangaRao, and G. T. Halverson. 1985. *Tolerable Movement Criteria for Highway Bridges*, FHWA/RD-85/107. Federal Highway Administration, U.S. Department of Transportation, Washington, DC, p. 118.

Moss, R. E. S., R. B. Seed, R. E. Kayen, J. P. Stewart, A. Der Kiureghian, and K. O. Cetin. 2006. "CPT-Based Probabilistic and Deterministic Assessment of In Situ Seismic Soil Liquefaction Potential," *Journal of Geotechnical and Geoenvironmental Engineering*. American Society of Civil Engineers, Reston, VA, Vol. 132, No. 8, pp. 1032–1051.

Munfakh, G., A. Arman, J. G. Collin, J. C.-J. Hung, and R. P. Brouillette. 2001. *Shallow Foundations Reference Manual*, FHWA-NHI-01-023. Federal Highway Administration, U.S. Department of Transportation, Washington, DC.

Nordlund, R. L. 1979. *Point Bearing and Shaft Friction of Piles in Sand*. Missouri-Rolla 5th Annual Short Course on the Fundamentals of Deep Foundation Design.

Norris, G. M. 1986. "Theoretically Based BEF Laterally Loaded Pile Analysis." In *Proc., 3rd International Conference on Numerical Methods in Offshore Piling*, Nantes, France, pp. 361–386.

Nottingham, L., and J. Schmertmann. 1975. *An Investigation of Pile Capacity Design Procedures*. Final Report D629 to Florida Department of Transportation from Department of Civil Engineering, University of Florida, Gainesville, FL, p. 159.

Olson, S. M., and T. D. Stark. 2002. "Liquefied Strength Ratio from Liquefaction Flow Failure Case Histories," *Canadian Geotechnical Journal*. NRC Research Press, Ottawa, ON, Canada, Vol. 39, pp 629–647.

O'Neill, M. W. and L. C. Reese. 1999. *Drilled Shafts: Construction Procedures and Design Methods*, FHWA-IF-99-025, Federal Highway Administration, U.S. Department of Transportation, Washington, DC.

Paikowsky, S. G., C. Kuo, G. Baecher, B. Ayyub, K. Stenersen, K. O'Malley, L. Chernauskas, and M. O'Neill. 2004. *Load and Resistance Factor Design (LRFD) for Deep Foundations*, NCHRP Report 507. Transportation Research Board, National Research Council, Washington, DC.

Peck, R. B., W. E. Hanson, and T. H. Thornburn. 1974. *Foundation Engineering*, Second Edition. John Wiley and Sons, Inc., New York, NY, p. 514.

Potyondy, J. G. 1961. "Skin Friction Between Various Soils and Construction Materials," *Géotechnique*. Vol. 11, No. 4, pp. 339–353.

Poulos, H. G., and E. H. Davis. 1974. *Elastic Solutions for Soil and Rock Mechanics*. John Wiley and Sons, Inc., New York, NY, p. 411.

Prakash, S., and H. D. Sharma. 1990. *Pile Foundations in Engineering Practice*. John Wiley and Sons, Inc., New York, NY, p. 734.

Prandtl, L. 1921. "Über die eindingungsfestigkeit (harte) plasticher baustoffe und die festigkeit von schneiden." *Zeitschrift für Angewandte Mathematik und Mechanik*, Vol. 1, No. 1, pp. 15–20.

Rausche, F., F. Moses, and G. G. Goble. 1972. "Soil Resistance Predictions from Pile Dynamics," *Journal of the Soil Mechanics and Foundation Division*. American Society of Civil Engineers, Reston, VA, Vol. 98, No. SM9, pp. 917–937.

Rausche, F., G. G.Goble, and G. Likins. 1985. "Dynamic Determination of Pile Capacity," *Journal of Geotechnical Engineering*. American Society of Civil Engineers, Reston, VA, Vol. 111, No. 3, pp. 367–383.

Reese, L. C. 1984. *Handbook on Design of Piles and Drilled Shafts Under Lateral Load*, FHWA-IP-84/11. Federal Highway Administration, U.S. Department of Transportation, Washington, DC.

Reese, L. C. 1986. *Behavior of Piles and Pile Groups Under Lateral Load*, FHWA/RD-85/106. Federal Highway Administration, Office of Engineering and Highway Operations Research and Development, U.S. Department of Transportation, Washington DC, p. 311.

Reese, L. C., and M. W. O'Neill. 1988. *Drilled Shafts: Construction Procedures and Design Methods*, FHWA-HI-88-042 or ADSC-TL-4. Federal Highway Administration, U.S. Department of Transportation, Washington, DC, p. 564.

Reissner, H. 1924. "Zum erddruckproblem." In *Proc., 1st Intem. Congress of Applied Mechanics*," Delft, Germany, pp. 295–311.

Richardson, E. V., and S. R. Davis. 2001. *Hydraulic Engineering Circular 18, Evaluating Scour at Bridges*, Fourth Edition, FHWA NHI-01-001. Hydraulic Engineering Circular No. 18, Federal Highway Administration, U.S. Department of Transportation, Washington, DC.

Rowe, R.K. and H.H. Armitage. 1987. "A Design Method for Drilled Piers in Soft Rock," *Canadian Geotechnical Journal,* Vol. 24, pp. 126-142.

Sabatini, P. J, R. C Bachus, P. W. Mayne, J. A. Schneider, and T. E. Zettler. 2002. *Geotechnical Engineering Circular 5 (GEC5)—Evaluation of Soil and Rock Properties*, FHWA-IF-02-034. Federal Highway Administration, U.S. Department of Transportation, Washington, DC.

Seed, R. B., and L. F. Harder. 1990. SPT-Based Analysis of Pore Pressure Generation and Undrained Residual Strength. In *Proc., H. B. Seed Memorial Symposium*, Berkeley, CA, May 1990. BiTech Ltd., Vancouver, BC, Canada, Vol. 2, pp. 351–376.

Skempton, A. W. 1951. "The Bearing Capacity of Clays." In *Proc., Building Research Congress*, Vol. 1, pp. 180–189.

Smith, S. P. 1994. "Preliminary Procedure to Predict Scour in Bedrock."

Sowers, G. F. 1979. *Introductory Soil Mechanics and Foundations: Geotechnical Engineering*. MacMillan Publishing Co., New York, NY, p. 621.

Terzaghi, K., and R. B. Peck. 1967. *Soil Mechanics in Engineering Practice*, Second Edition. John Wiley and Sons, Inc., New York, NY, p. 729.

Terzaghi, K., R. G. Peck, and G. Mesri. 1996. *Soil Mechanics in Engineering Practice*. John Wiley and Sons, Inc., New York, NY, pp. 549.

Tomlinson, M. J. 1980. *Foundation Design and Construction*, Fourth Edition. Pitman Publishing Limited, 128 Long Acre, London WC2E 9AN, UK.

Tomlinson, M. J. 1986. *Foundation Design and Construction*, Fifth Edition. Longman Scientific and Technical, London, p. 842.

Tomlinson, M. J. 1987. *Pile Design and Construction Practice*. Viewpoint Publication, p. 415.

Turner, J.P. 2006. *NCHRP Synthesis 360: Rock-Socketed Shafts for Highway Structure Foundations*, Transportation Research Board, National Research Council, Washington, D.C., 148 p.

Turner, J. P., and S. B. Ramey. 2010. "Base Resistance of Drilled Shafts in Fractured Rock," In *Proc., The Art of Foundation Engineering Practice Congress 2010*. American Society of Civil Engineers, Reston, VA, pp. 687-701.

U.S. Department of the Navy. 1982. *Soil Mechanics. Design Manual 7.1,* NAVFAC DM-7.1. Naval Facilities Engineering Command, Alexandria, VA, p. 348.

Vesic', A. S. 1970. *Research on Bearing Capacity of Soils*.

Vesic', A. S. 1975. "Bearing Capacity of Shallow Foundations." In *Foundation Engineering Handbook*, H. Winterkorn, and H. Y. Fang, eds. Van Nostrand Reinhold Co., New York, NY, Chapter 3, pp. 121–147.

Vesic', A. S. 1973. "Analysis of Ultimate Loads of Shallow Foundations," *Journal of the Soil Mechanics and Foundations Division*. American Society of Civil Engineers, Reston, VA, Vol. 99, No. SM1. pp. 45–73.

Vijayvergiya, V. N., and J. A. Focht, Jr. 1972. "A New Way to Predict the Capacity of Piles in Clay." In *Proc., 4th Annual Offshore Technology Conference*, Vol. 2, pp. 865–874.

Williams, M. E., M. McVay, and M. I. Hoit. 2003. "LRFD Substructure and Foundation Design Programs." In *Proc., 2003 International Bridge Conference*, June 9–11, Pittsburgh, PA.

Winterkorn, H. F., and H. Y. Fang. 1975. *Foundation Engineering Handbook*. Van Nostrand Reinhold Company, New York, NY, p. 751.

Wyllie, D. C. 1999. *Foundations on Rock*. Routledge, New York, NY.

Yazdanbod, A., S. A. Sheikh, and M. W. O'Neill. 1987. "Uplift of Shallow Underream in Jointed Clay." In *Proc., Foundations for Transmission Line Towers*, J. L. Briaud, ed. American Society of Civil Engineers, Reston, VA, pp. 110–127.

Youd, T. L., and I. M. Idriss. 1997. *Proc., NCEER Workshop on Evaluation of Liquefaction Resistance of Soils*, MCEER-97-0022.

Youd, T. L. and B. L. Carter. 2005. "Influence of Soil Softening and Liquefaction on Spectral Acceleration," *Journal of Geotechnical and Geoenvironmental Engineering*. American Society of Civil Engineers, Reston, VA, Vol. 131, No. 7, pp. 811–825.

Youd, et al. 2001. "Liquefaction Resistance of Soils: Summary Report from the 1996 NCEER and 1998 NCEER/NSF Workshops on Evaluation of Liquefaction Resistance in Soils," *Journal of Geotechnical and Geoenvironmental Engineering*. American Society of Civil Engineers, Reston, VA, Vol. 127, No. 10, pp. 817–833.

Zhang, L. M., W. H. Tang, and C. W. W. Ng. 2001. "Reliability of Axially Loaded Driven Pile Groups," *Journal of Geotechnical and Geoenvironmental Engineering*. American Society of Civil Engineers, Reston, VA, Vol. 127, No. 12, pp. 1051–1060.

51

APPENDIX A10—SEISMIC ANALYSIS AND DESIGN OF FOUNDATIONS – ***NO CHANGES – NOT SHOWN***

Chapter 9 Embankments

9.1 Overview and Data Needed

This chapter addresses the design and construction of rock embankments, bridge approach embankments, earth embankments, and light weight fills. Static loading as well as seismic loading conditions are covered, though for a more detailed assessment of seismic loading on embankment performance, see Chapter 6. The primary geotechnical issues that impact embankment performance are overall stability, internal stability, settlement, materials, and construction.

For the purposes of this chapter embankments include the following:

- Rock embankments, defined as fills in which the material in all or any part of an embankment contains 25 percent or more, by volume, gravel or stone 4 inches or more in diameter.
- Bridge approach embankments, defined as fill beneath a bridge structure and extending 100 feet beyond a structure's end at subgrade elevation for the full embankment width, plus an access ramp on a 10H:1V slope from subgrade down to the original ground elevation. The bridge approach embankment also includes any embankment that replaces unsuitable foundation soil beneath the bridge approach embankment.
- Earth embankments are fills that are not classified as rock or bridge approach embankments, but that are constructed out of soil.
- Lightweight fills contain lightweight fill or recycled materials as a significant portion of the embankment volume, and the embankment construction is usually by special provision. Lightweight fills are most often used as a portion of the bridge approach embankment to mitigate settlement or in landslide repairs to reestablish roadways.

9.1.1 Site Reconnaissance

General requirements for site reconnaissance are given in Chapter 2.

The key geotechnical issues for design and construction of embankments include stability and settlement of the underlying soils, the impact of the stability and settlement on the construction staging and time requirements, and the impact to adjacent and nearby structures, such as buildings, bridge foundations, and utilities. Therefore, the geotechnical designer should perform a detailed site reconnaissance of the proposed construction. This should include a detailed site review outside the proposed embankment footprint in addition to within the embankment footprint. This reconnaissance should extend at least two to three times the width of the embankment on either side of the embankment and to the top or bottom of slopes adjacent to the embankment. Furthermore, areas below proposed embankments should be fully explored if any existing landslide activity is suspected.

9.1.2 Field Exploration and Laboratory Testing Requirements

General requirements for the development of the field exploration and laboratory testing plans are provided in Chapter 2. The expected project requirements and subsurface conditions should be analyzed to determine the type and quantity of information to be obtained during the geotechnical investigation. During this phase it is necessary to:

- Identify performance criteria (e.g. allowable settlement, time available for construction, seismic design requirements, etc.).
- Identify potential geologic hazards, areas of concern (e.g. soft soils), and potential variability of local geology.
- Identify engineering analyses to be performed (e.g. limit equilibrium slope stability analyses, liquefaction susceptibility, lateral spreading/slope stability deformations, settlement evaluations).
- Identify engineering properties required for these analyses.
- Determine methods to obtain parameters and assess the validity of such methods for the material type.
- Determine the number of tests/samples needed and appropriate locations for them.

The goal of the site characterization for embankment design and construction is to develop the subsurface profile and soil property information needed for stability and settlement analyses. Soil parameters generally required for embankment design include:

- Total stress and effective stress strength parameters;
- Unit weight;
- Compression indexes (primary, secondary and recompression); and
- Coefficient of consolidation).

Table 9-1 provides a summary of site characterization needs and field and laboratory testing considerations for embankment design.

Geotechnical Issues	Engineering Evaluations	Required Information for Analyses	Field Testing	Laboratory Testing
Embankments and Embankment Foundations	• settlement (magnitude & rate) • bearing capacity • slope stability • lateral pressure • internal stability • borrow source evaluation (available quantity and quality of borrow soil) • required reinforcement • liquefaction • delineation of soft soil deposits • potential for subsidence (karst, mining, etc.) • constructability	• subsurface profile (soil, ground water, rock) • compressibility parameters • shear strength parameters • unit weights • time-rate consolidation parameters • horizontal earth pressure coefficients • interface friction parameters • pullout resistance • geologic mapping including orientation and characteristics of rock discontinuities • shrink/swell/ degradation of soil and rock fill	• nuclear density • plate load test • test fill • CPT (w/ pore pressure measurement) • SPT • PMT • dilatometer • vane shear • rock coring (RQD) • geophysical testing • piezometers • settlement plates • slope inclinometers	• 1-D Oedometer • triaxial tests • unconfined compression • direct shear tests • grain size distribution • Atterberg Limits • specific gravity • organic content • moisture-density relationship • hydraulic conductivity • geosynthetic/soil testing • shrink/swell • slake durability • unit weight • relative density

Summary of Information Needs and Testing Considerations for Embankments (Adapted From Sabatini, Et Al., 2002)
Table 9-1

9.1.3 Soil Sampling and Stratigraphy

The size, complexity and extent of the soil sampling program will depend primarily on the type, height and size of embankment project as well as the expected soil conditions.

Generally, embankments 10 feet or less in height, constructed over average to good soil conditions (e.g., non-liquefiable, medium dense to very dense sand, silt or gravel, with no signs of previous instability) will require only a basic level of site investigation. A geologic site reconnaissance (see Chapter 2), combined with widely spaced test pits, hand holes, or a few shallow borings to verify field observations and the anticipated site geology may be sufficient, especially if the geology of the area is well known, or if there is some prior experience in the area.

For larger embankments, or for any embankment to be placed over soft or potentially unstable ground, geotechnical explorations should in general be spaced no more than 500 feet apart for uniform conditions. In non-uniform soil conditions, spacing should be decreased to 100 to 300 foot intervals with at least one boring in each major landform or geologic unit. A key to the establishment of exploration

frequency for embankments is the potential for the subsurface conditions to impact the construction of the embankment, the construction contract in general, and the long-term performance of the finished project. The exploration program should be developed and conducted in a manner that these potential problems, in terms of cost, time, and performance, are reduced to an acceptable level. The boring frequency described above may need to be adjusted by the geotechnical designer to address the risk of such problems for the specific project.

All embankments over 10 feet in height, embankments over soft soils, or those that could impact adjacent structures (bridge abutments, buildings etc.), will generally require geotechnical borings for the design. The more critical areas for stability of a large embankment are between the top and bottom of the slopes. This is where base stability is of most concern and where a majority of the borings should be located, particularly if the near-surface soils are expected to consist of soft fine-grained deposits. At critical locations, (e.g., maximum embankment heights, maximum depths of soft strata), a minimum of two exploration points in the transverse direction to define the existing subsurface conditions for stability analyses should be obtained. More exploration points to define the subsurface stratigraphy, including the conditions within and below existing fill, may be necessary for very large fills or very erratic soil conditions.

Embankment widening projects will require careful consideration of exploration locations. Borings near the toe of the existing fill are needed to evaluate the present condition of the underlying soils, particularly if the soils are fine-grained. In addition, borings through the existing fill into the underlying consolidated soft soil, or, if overexcavation of the soft soil had been done during the initial fill construction, borings to define the extent of removal, should be obtained to define conditions below the existing fill.

In some cases, the stability and/or durability of the existing embankment fill may be questionable because the fill materials are suspect or because slope instability in the form of raveling, downslope lobes, or slope failures have been observed during the site reconnaissance phase. Some embankments constructed of material that is susceptible to accelerated weathering may require additional borings through the core of the embankment to sample and test the present condition of the existing fill.

Borings are also needed near existing or planned structures that could be impacted by new fill placement. Soil sampling and testing will be useful for evaluating the potential settlement of the existing structure foundations as the new fill is placed.

The depth of borings, test pits, and hand holes will generally be determined by the expected soil conditions and the depth of influence of the new embankment. Explorations will need to be sufficiently deep to penetrate through surficial problem soils such as loose sand, soft silt and clay and organic materials, and at least 10 feet into competent soil conditions. In general, all geotechnical borings should be drilled to a minimum depth of twice the planned embankment height.

Understanding of the underlying soil conditions requires appropriate sampling intervals and methods. As for most engineering problems, testing for strength and compression in fine-grained soils requires the need for undisturbed samples. The SPT is useful in cohesionless soil where it is not practical or possible to obtain undisturbed

samples for laboratory engineering tests. SPT sampling is recommended at wet sand sites where liquefaction is a key engineering concern.

On larger projects, cone penetration test (CPT) probes can be used to supplement conventional borings. Besides being significantly less expensive, CPT probes allow the nearly continuous evaluation of soil properties with depth. They can detect thin layers of soil, such as a sand lens in clay that would greatly reduce consolidation time that may be missed in a conventional boring. In addition, CPT probes can measure pore pressure dissipation responses, which can be used to evaluate relative soil permeability and consolidation rates. Because there are no samples obtained, CPT probes shall be used in conjunction with a standard boring program. Smaller projects that require only a few borings generally do not warrant an integrated CPT/boring field program.

9.1.4 Groundwater

At least one piezometer should be installed in borings drilled in each major fill zone where stability analysis will be required and groundwater is anticipated. Water levels measured during drilling are often not adequate for performing stability analysis. This is particularly true where drilling is in fine-grained soils that can take many days or more for the water level to equalize after drilling (see Chapter 2). Even in more permeable coarse grained soils, the drilling mud used to drill the boring can obscure detection of the groundwater level. Notwithstanding, water levels should be recorded during drilling in all borings or test pits. Information regarding the time and date of the reading and any fluctuations that might be seen during drilling should be included on the field logs.

For embankment widening projects, piezometers are generally more useful in borings located at or near the toe of an existing embankment, rather than in the fill itself. Exceptions are when the existing fill is along a hillside or if seepage is present on the face of the embankment slope.

The groundwater levels should be monitored periodically to provide useful information regarding variation in levels over time. This can be important when evaluating base stability, consolidation settlement or liquefaction. As a minimum, the monitoring should be accomplished several times during the wet season (October through April) to assess the likely highest groundwater levels that could affect engineering analyses. If practical, a series of year-round readings taken at 1 to 2 month intervals should be accomplished in all piezometers.

The location of the groundwater table is particularly important during stability and settlement analyses. High groundwater tables result in lower effective stress in the soil affecting both the shear strength characteristics or the soil and its consolidation behavior under loading. The geotechnical designer should identify the location of the groundwater table and determine the range in seasonal fluctuation.

If there is a potential for a significant groundwater gradient beneath an embankment or surface water levels are significantly higher on one side of the embankment than the other, the effect of reduced soil strength caused by water seepage should be evaluated. In this case, more than one piezometer should be installed to estimate the gradient. Also, seepage effects must be considered when an embankment is placed on or near the top of a slope that has known or potential seepage through it. A flow net

or a computer model (such as MODFLOW) may be used to estimate seepage velocity and forces in the soil. This information may then be used into the stability analysis to model pore pressures.

9.2 Design Considerations

9.2.1 Typical Embankment Materials and Compaction

General instructions for embankment construction are discussed in the WSDOT *Construction Manual* Section 2.3.3, and specific construction specifications for embankment construction are provided in WSDOT Construction Specifications Section 2-03. The geotechnical designer should determine during the exploration program if any of the material from planned earthwork will be suitable for embankment construction (see Chapter 10). Consideration should be given to whether the material is moisture sensitive and difficult to compact during wet weather.

9.2.1.1 Rock Embankments

The WSDOT *Standard Specifications* define rock embankment as "all or any part of an embankment in which the material contains 25 percent or more by volume of gravel or stone 4 inches or greater in diameter." Compaction tests cannot be applied to coarse material with any degree of accuracy; therefore, a given amount of compactive effort is specified for rock embankments, as described in *Standard Specifications* Section 2-03.3(14)A.

Special consideration should be given to the type of material that will be used in rock embankments. In some areas of the state, moderately weathered or very soft rock may be encountered in cuts and used as embankment fill. On projects located in southwestern Washington, degradable fine grained sandstone and siltstone are often encountered in the cuts. The use of this material in embankments can result in significant long term settlement and stability problems as the rock degrades, unless properly compacted with heavy tamping foot rollers (Machan, et al., 1989).

The rock should be tested by the Washington Degradation Test (WSDOT Test Method 113) and the slake durability test (see Chapter 5) if there is suspicion that the geologic nature of the rock source proposed indicates that poor durability rock is likely to be encountered. When the rock is found to be non-durable, it should be physically broken down and compacted as earth embankment provided the material meets or exceeds common borrow requirements. Special compaction requirements may be needed for these materials. In general, tamping foot rollers work best for breaking down the rock fragments. The minimum size roller should be about 30 tons. Specifications should include the maximum size of the rock fragments and maximum lift thickness. These requirements will depend on the hardness of the rock, and a test section should be incorporated into the contract to verify that the Contractor's methods will achieve compaction and successfully break down the material. In general, both the particle size and lift thickness should be limited to 12 inches.

9.2.1.2 Earth Embankments and Bridge Approach Embankments

Three types of materials are commonly used in WSDOT earth embankments, including common, select, and gravel borrow. Bridge approach embankments should be constructed from select or gravel borrow, although common borrow may be used

in the drier parts of the State, provided it is not placed below a structure foundation or immediately behind an abutment wall. Common borrow is not intended for use as foundation material beneath structures or as wall backfill due to its tendency to be more compressible and due to its poor drainage characteristics.

Requirements for common, select and gravel borrow are in Section 9-03.14 of the WSDOT *Standard Specifications*. The suggested range of soil properties for each material type to be used in design is discussed in Chapter 5. The common and select borrow specifications are intended for use where it is not necessary to strictly control the strength properties of the embankment material and where all weather construction is not required.

Procedures for constructing earth embankments are described in Section 2-03.3(14) B of the *Standard Specifications*. Compaction is specified in accordance with Method A, Method B, or Method C. Method A consists of routing hauling equipment over the embankment and is not normally used on WSDOT projects. Method B limits the thickness of the lifts to 8 inches and requires that 90 percent of maximum dry density be achieved in all but the upper 2 feet of the embankment. In the upper two feet of the embankment the lift thickness is limited to 4 inches and the required compaction is 95 percent of maximum dry density. Method B is used on all embankments on WSDOT projects unless another method is specified.

Method C differs from Method B in that the entire embankment must be compacted to 95 percent of maximum dry density. Method C is required when the structural quality of the embankment is essential. Method C is required in bridge approach embankments as defined in Section 1-01.3 of the WSDOT *Standard Specifications*. Method C shall also be required on any foundation material beneath structures. Because foundation stresses are transferred outward as well as downward into the bearing soils, the limits of the foundation material should extend horizontally outward from each edge of the footing a distance equal to the thickness of the fill below the foundation.

The maximum density and optimum moisture content for soil placed in earth embankments are determined by testing in accordance with WSDOT Test Method No. 606 (Method of Test for Compaction Control of Granular Materials) or AASHTO T 99 Method A (standard Proctor) as prescribed in Section 2-03.3(14)D of the *Standard Specifications*. Test method 606 is used if 30 percent or more of the material consists of gravel size particles (retained on the No. 4 sieve).

9.2.1.3 Fill Placement Below Water

If material will be placed below the water table, material that does not require compaction such as Quarry Spalls, Foundation Material Class B, Shoulder Ballast, or light loose rip rap should specified. Once above the water table, other borrow materials should be used. Quarry spalls and rip rap should be choked with Shoulder Ballast or Foundation Material Class A or B before placement of borrow. Alternately, construction geosynthetic for soil stabilization may be used to prevent migration of the finer borrow into the voids spaces of the coarser underlying material.

9.2.2 Embankments for Detention/Retention Facilities

Embankments for detention/retention facilities impounding over 10 acre-feet of water come under the jurisdiction of the Dam Safety Office (DSO) of the Washington State Department of Ecology and shall be designed as a small dam in accordance with DSO requirements.

Embankments for detention/retention facilities impounding 10 acre feet of water or less are not regulated by the DSO, but they should be designed using the DSO guidelines as the basis for design. Unlined drainage facilities shall be analyzed for seepage and piping through the embankment fill and underlying soils. Stability of the fill and underlying soils subjected to seepage forces shall have a minimum safety factor of 1.5. Furthermore, the minimum safety factor for piping stability analysis shall be 1.5.

9.2.3 Stability Assessment

In general, embankments 10 feet or less in height with 2H:1V or flatter side slopes, may be designed based on past precedence and engineering judgment provided there are no known problem soil conditions such as liquefiable sands, organic soils, soft/loose soils, or potentially unstable soils such as Seattle clay, estuarine deposits, or peat. Embankments over 10 feet in height or any embankment on soft soils, in unstable areas/soils, or those comprised of light weight fill require more in depth stability analyses, as do any embankments with side slope inclinations steeper than 2H:1V. Moreover, any fill placed near or against a bridge abutment or foundation, or that can impact a nearby buried or above-ground structure, will likewise require stability analyses by the geotechnical designer. Slope stability analysis shall be conducted in accordance with Chapter 7.

Prior to the start of the stability analysis, the geotechnical designer should determine key issues that need to be addressed. These include:

- Is the site underlain by soft silt, clay or peat? If so, a staged stability analysis may be required.
- Are site constraints such that slopes steeper than 2H:1V are required? If so, a detailed slope stability assessment is needed to evaluate the various alternatives.
- Is the embankment temporary or permanent? Factors of safety for temporary embankments may be lower than for permanent ones, depending on the site conditions and the potential for variability.
- Will the new embankment impact nearby structures or bridge abutments? If so, more elaborate sampling, testing and analysis are required.
- Are there potentially liquefiable soils at the site? If soil, seismic analysis to evaluate this may be warranted (see Chapter 6) and ground improvement may be needed.

Several methodologies for analyzing the stability of slopes are detailed or identified by reference in Chapter 7 and are directly applicable to earth embankments.

9.2.3.1 Safety Factors

Embankments that support structure foundations or walls or that could potentially impact such structures should be designed in accordance with the AASHTO LRFD Bridge Design Specifications and Chapters 8 and 15. If an LRFD design is required,

a resistance factor is used in lieu of a safety factor. However, since slope stability in the AASHTO LRFD Bridge Design Specifications is assessed only for the service and extreme event (seismic) limit states, the load factors are equal to 1.0, and the resistance factor is simply the inverse of the factor of safety (i.e., 1/FS) that is calculated in most slope stability analysis procedures and computer programs. The resistance factors and safety factors for overall stability under static conditions are as follows:

- All embankments not supporting or potentially impacting structures shall have a minimum safety factor of 1.25.
- Embankments supporting or potentially impacting non-critical structures shall have a resistance factor for overall stability of 0.75 (i.e., a safety factor of 1.3).
- All Bridge Approach Embankments and embankments supporting critical structures shall have a resistance factor of 0.65 (i.e., a safety factor of 1.5). Critical structures are those for which failure would result in a life threatening safety hazard for the public, or for which failure and subsequent replacement or repair would be an intolerable financial burden to the citizens of Washington State.

Under seismic conditions, only those portions of the new embankment that could impact an adjacent structure such as bridge abutments and foundations or nearby buildings require seismic analyses and an adequate overall stability resistance factor (i.e., a maximum resistance factor of 0.9 or a minimum factor of safety of 1.1). See Chapter 6 for specific requirements regarding seismic design of embankments.

9.2.3.2 Strength Parameters

Strength parameters are required for any stability analysis. Strength parameters appropriate for the different types of stability analyses shall be determined based on Chapter 5 and by reference to FHWA Geotechnical Engineering Circular No. 5 (Sabatini, et al., 2002).

If the critical stability is under drained conditions, such as in sand or gravel, then effective stress analysis using a peak friction angle is appropriate and should be used for stability assessment. In the case of over-consolidated fine grained soils, a friction angle based on residual strength may be appropriate. This is especially true for soils that exhibit strain softening or are particularly sensitive to shear strain such as Seattle Clay.

If the critical stability is under undrained conditions, such as in most clays and silts, a total stress analysis using the undrained cohesion value with no friction is appropriate and should be used for stability assessment.

For staged construction, both short (undrained) and long term (drained) stability need to be assessed. At the start of a stage the input strength parameter is the undrained cohesion. The total shear strength of the fine-grained soil increases with time as the excessive pore water dissipates, and friction starts to contribute to the strength. A more detailed discussion regarding strength gain is presented in Section 9.3.1.

9.2.4 Embankment Settlement Assessment

New embankments, as is true of almost any new construction, will add load to the underlying soils and cause those soils to settle. As discussed in Section 8.11.3.2, the total settlement has up to three potential components: 1) immediate settlement, 2) consolidation settlement, and 3) secondary compression.

Settlement shall be assessed for all embankments. Even if the embankment has an adequate overall stability factor of safety, the performance of a highway embankment can be adversely affected by excessive differential settlement at the road surface.

Settlement analyses for embankments over soft soils require the compression index parameters for input. These parameters are typically obtained from standard one-dimensional oedometer tests of the fine-grained soils (see Chapter 5 for additional information). For granular soils, these parameters can be estimated empirically (see Section 8.11.3.2). Oedometer tests should be completed to at least twice the preconsolidation pressure with at least three, and preferably four, points on the virgin consolidation curve (i.e., at stresses higher than the preconsolidation pressure). The coefficient of consolidation value for the virgin curve can be ten times higher than that for the test results below the preconsolidation pressure.

9.2.4.1 Settlement Impacts

Because primary consolidation and secondary compression can continue to occur long after the embankment is constructed (post construction settlement), they represent the major settlement concerns for embankment design and construction. Post construction settlement can damage structures and utilities located within the embankment, especially if those facilities are also supported by adjacent soils or foundations that do not settle appreciably, leading to differential settlements. Embankment settlement near an abutment could create an unwanted dip in the roadway surface, or downdrag and lateral squeeze forces on the foundations. See Chapter 8 for more information regarding the use of bridge approach slabs to minimize the effects of differential settlement at the abutment, and the methodology to estimate downdrag loads on foundations.

If the primary consolidation is allowed to occur prior to placing utilities or building structures that would otherwise be impacted by the settlement, the impact is essentially mitigated. However, it can take weeks to years for primary settlement to be essentially complete, and significant secondary compression of organic soils can continue for decades. Many construction projects cannot absorb the scheduling impacts associated with waiting for primary consolidation and/or secondary compression to occur. Therefore, estimating the time rate of settlement is often as important as estimating the magnitude of settlement.

To establish the target settlement criteria, the tolerance of structures or utilities to differential settlement that will be impacted by the embankment settlement shall be determined. Lateral movement (i.e., lateral squeeze) caused by the embankment settlement and its effect on adjacent structures, including light, overhead sign, and signal foundations, shall also be considered. If structures or utilities are not impacted by the embankment settlement, settlement criteria are likely governed by the long-term maintenance needs of the roadway surfacing. In that case, the target settlement criteria shall be established with consideration of the effect differential settlement will have on the pavement life and surface smoothness.

9.2.4.2 Settlement Analysis

9.2.4.2.1 Primary Consolidation

The key parameters for evaluating the amount of settlement below an embankment include knowledge of:

- The subsurface profile including soil types, layering, groundwater level and unit weights;
- The compression indexes for primary, rebound and secondary compression from laboratory test data, correlations from index properties, and results from settlement monitoring programs completed for the site or nearby sites with similar soil conditions. See Chapters 5 and 8 for additional information regarding selection of design parameters for settlement analysis.
- The geometry of the proposed fill embankment, including the unit weight of fill materials and any long term surcharge loads.

The detailed methodology to estimate primary consolidation settlement is provided in Section 8.11.3.2, except that the stress distribution below the embankment should be calculated as described in Section 9.2.4.3. The soil profile is typically divided into layers for analysis, with each layer reflecting changes in soils properties. In addition, thick layers with similar properties are often subdivided for refinement of the analysis since the settlement calculations are based on the stress conditions at the midpoint of the layer (i.e. it is typically preferable to evaluate a near-surface, 20-foot thick layer as two 10-foot thick layers as opposed to one 20-foot thick layer). The total settlement is the sum of the settlement from each of the compressible layers.

If the pre-consolidation pressure of any of the soil layers being evaluated is greater than its current initial effective vertical stress, the settlement will follow its rebound compression curve rather than its virgin compression curve (represented by C_c). In this case $C_{r\varepsilon,}$ the recompression index, should be used instead of $C_{c\varepsilon}$ in Equation 8-8 up to the point where the initial effective stress plus the change in effective stress imposed by the embankment surpasses the pre-consolidation pressure. Pre-consolidation pressures in excess of the current vertical effective stress occur in soils that have been overconsolidated, such as from glacial loading, preloading, or desiccation.

9.2.4.2.2 Secondary Compression

For organic soils and highly plastic soils determined to have an appreciable secondary settlement component, the secondary compression should be determined as described in Section 8.11.3.2.2, Equation 8-13. Note the secondary compression is in general independent of the stress state and theoretically is a function only of the secondary compression index and time.

Similar to estimating the total primary consolidation, the contribution from the individual layers are summed to estimate the total secondary compression. Since secondary compression is not a function of the stress state in the soil but rather how the soil breaks down over time, techniques such as surcharging to pre-induce the secondary settlement are sometimes only partially effective at mitigating the secondary compression. Often the owner must accept the risks and maintenance costs associated with secondary compression if a cost/benefit analysis indicates that mitigation techniques such as using lightweight fills or overexcavating and replacing the highly compressible soils are too costly.

9.2.4.3 Stress Distribution

One of the primary input parameters for settlement analysis is the increase in vertical stress at the midpoint of the layer being evaluated caused by the embankment or other imposed loads. It is generally quite conservative to assume the increase in vertical stress at depth is equal to the bearing pressure exerted by the embankment at the ground surface. In addition to the bearing pressure exerted at the ground surface, other factors influencing the stress distribution at depth include the geometry (length and width) of the embankment, inclination of the embankment side slopes, depth below the ground surface to the layer being evaluated, and horizontal distance from the center of the load to the point in question. Several methods are available to estimate the stress distribution.

9.2.4.3.1 Simple 2V:1H Method

Perhaps the simplest approach to estimate stress distribution at depth is using the 2V:1H (vertical to horizontal) method. This empirical approach is based on the assumption that the area the load acts over increases geometrically with depth as depicted in Figure 9-1. Since the same vertical load is spread over a much larger area at depth, the unit stress decreases.

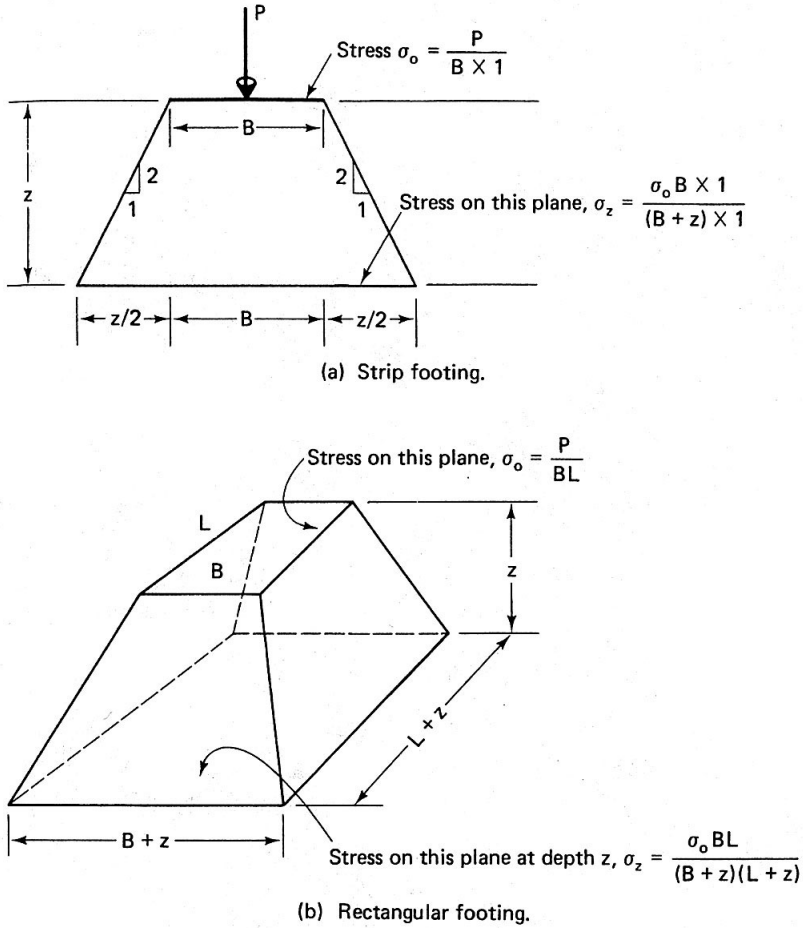

2V:1H Method to Estimate Vertical Stress Increase as a Function of Depth Below Ground (After Holtz and Kovacs, 1981)
Figure 9-1

9.2.4.3.2 Theory of Elasticity

Boussinesq (1885) developed equations for evaluating the stress state in a homogenous, isotropic, linearly elastic half-space for a point load acting perpendicular to the surface. Elasticity based methods should be used to estimate the vertical stress increase in subsurface strata due to an embankment loading, or embankment load in combination with other surcharge loads. While most soils are not elastic materials, the theory of elasticity is the most widely used methodology to estimate the stress distribution in a soil deposit from a surface load. Most simplifying charts and the subroutines in programs such as SAF-1 and EMBANK are based on the theory of elasticity. Some are based on Boussinesq theory and some on Westergaard's equations (Westegaard, 1938), which also include Poisson's ratio (relates the ratio of strain applied in one direction to strain induced in an orthogonal direction).

9.2.4.3.3 Empirical Charts

The equations for the theory of elasticity have been incorporated into design charts and tables for typical loading scenarios, such as below a foundation or an embankment. Almost all foundation engineering textbooks include these charts. For convenience, charts to evaluate embankment loading are included as Figures 9-2 and 9-3.

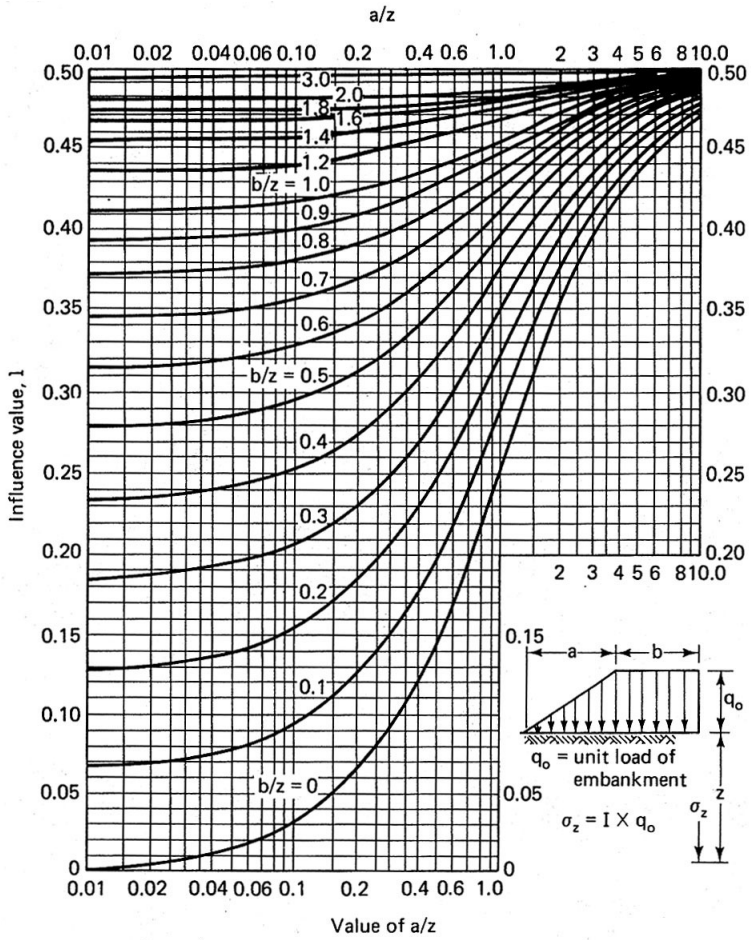

Influence Factors for Vertical Stress Under a Very Long Embankment (After NAVFAC, 1971 as Reported in Holtz and Kovacs, 1981)
Figure 9-2

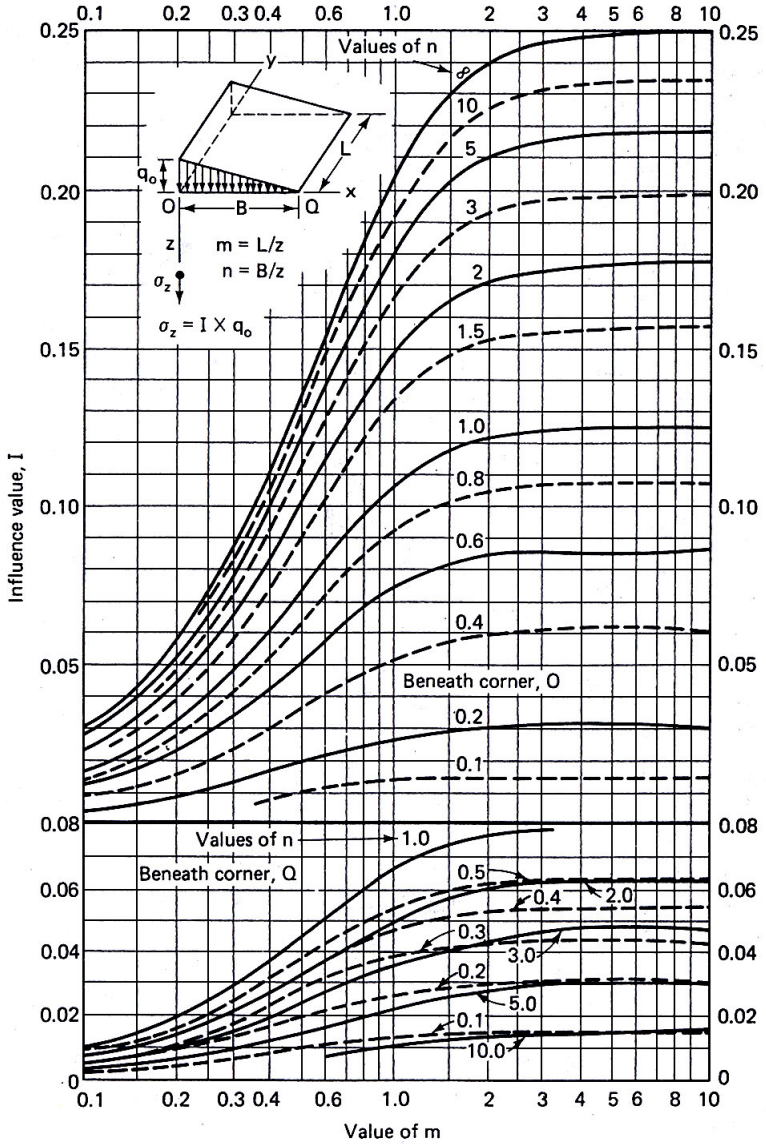

Influence Values for Vertical Stress Under the Corners of a Triangular Load of Limited Length (after NAVFAC, 1971 as reported in Holtz and Kovacs, 1981)
Figure 9-3

9.2.4.3.4 Rate of Settlement

The time rate of primary consolidation is typically estimated using equations based on Terzaghi's one-dimensional consolidation theory. The time rate of primary consolidation shall be estimated as described in Section 8.11.3.2.

The value of C_v should be determined from the laboratory test results, piezocone testing, and/or back-calculation from settlement monitoring data obtained at the site or from a nearby site with similar geologic and soil conditions.

The length of the drainage path is perhaps the most critical parameter because the time to achieve a certain percentage of consolidation is a function of the square of the drainage path length. This is where incorporating CPTs into the exploration program can be beneficial, as they provide a nearly continuous evaluation of the soil profile,

including thin sand layers that can easily be missed in a typical boring exploration program. The thin sand lenses can significantly reduce the drainage path length.

It is important to note some of the assumptions used by Terzaghi's theory to understand some of its limitations. The theory assumes small strains such that the coefficient of compressibility of the soil and the coefficient of permeability remain essentially constant. The theory also assumes there is no secondary compression. Both of these assumptions are not completely valid for extremely compressible soils such as organic deposits and some clays. Therefore, considerable judgment is required to when using Terzaghi's theory to evaluate the time rate of settlement for these types of soil. In these instances, or when the consolidation process is very long, it may be beneficial to complete a preload test at the site with sufficient monitoring to assess both the magnitude and time rate of settlement for the site.

9.2.4.4 Analytical Tools

The primary consolidation and secondary settlement can be calculated by hand or by using computer programs such as SAF-1 (Prototype Engineering Inc., 1993) or EMBANK (FHWA, 1993). Alternatively, spreadsheet solutions can be easily developed. The advantage of computer programs such as SAF-1 and EMBANK are that multiple runs can be made quickly, and they include subroutines to estimate the increased vertical effective stress caused by the embankment or other loading conditions.

9.3 Stability Mitigation

A variety of techniques are available to mitigate inadequate slope stability for new embankments or embankment widenings. These techniques include staged construction to allow for the underlying soils to gain strength, base reinforcement, ground improvement, use of lightweight fill, and construction of toe berms and shear keys. A summary of these instability mitigation techniques is presented below along with the key design considerations.

9.3.1 Staged Construction

Where soft compressible soils are present below a new embankment location and it is not economical to remove and replace these soils with compacted fill, the embankment can be constructed in stages to allow the strength of the compressible soils to increase under the weight of new fill. Construction of the second and subsequent stages commences when the strength of the compressible soils is sufficient to maintain stability. In order to define the allowable height of fill for each stage and maximum rate of construction, detailed geotechnical analysis is required. This analysis typically requires consolidated undrained (CU), consolidated drained (CD) or consolidated undrained with pore pressure measurements (CU_p), and initial undrained (UU) shear strength parameters for the foundation soils along with the at-rest earth pressure coefficient (K_o), soil unit weights, and the coefficient of consolidation (Cv).

The analysis to define the height of fill placed during each stage and the rate at which the fill is placed is typically completed using a limit equilibrium slope stability program along with time rate of settlement analysis to estimate the percent consolidation required for stability. Alternatively, numerical modeling programs,

such as FLAC and PLAXIS, can be used to assess staged construction, subject to the approval of the WSDOT State Geotechnical Engineer. Numerical modeling has some advantages over limit equilibrium approaches in that both the consolidation and stability can be evaluated concurrently. The disadvantages of numerical modeling include the lack of available field verification of modeling results, and most geotechnical engineers are more familiar with limit equilibrium approaches than numerical modeling. The accuracy of the input parameters can be critical to the accuracy of numerical approaches. Steps for using a limit equilibrium approach to evaluate staged construction are presented below.

For staged construction, two general approaches to assessing the criteria used during construction to control the rate of embankment fill placement to allow the necessary strength gain to occur in the soft subsoils are available. The two approaches are total stress analysis and effective stress analysis:

- For the total stress approach, the rate of embankment construction is controlled through development of a schedule of maximum fill lift heights and intermediate fill construction delay periods. During these delay periods the fill lift that was placed is allowed to settle until an adequate amount of consolidation of the soft subsoil can occur. Once the desired amount of consolidation has occurs, placement of the next lift of fill can begin. These maximum fill lift thicknesses and intermediate delay periods are estimated during design. For this approach, field measurements such as the rate of settlement or the rate of pore pressure decrease should be obtained to verify that the design assumptions regarding rate of consolidation are correct. However, if only a small amount of consolidation is required (e.g., 20 to 40% consolidation), it may not be feasible to determine of the desired amount of consolidation has occurred, since the rate of consolidation may still be on the linear portion of the curve at this point. Another approach may be to determine if the magnitude of settlement expected at that stage, considering the degree of consolidation desired, has been achieved. In either case, some judgment will need to be applied when interpreting such data and deciding whether or not to reduce or extend the estimated delay period during fill construction.
- For the effective stress approach, the pore pressure increase beneath the embankment in the soft subsoil is monitored and used to control the rate of embankment construction. During construction, the pore pressure increase is not allowed to exceed a critical amount to insure embankment stability. The critical amount is generally controlled in the contract by use of the pore pressure ratio (ru), which is the ratio of pore pressure to total overburden stress. To accomplish this pore pressure measurement, pore pressure transducers are typically located at key locations beneath the embankment to capture the pore pressure increase caused by consolidation stress. As is true of the total stress approach, some judgment will need to be applied when interpreting such data and deciding whether or not to reduce or extend the estimated delay period during fill construction, as the estimate of the key parameters may vary from the actual values of the key parameters in the field. Also, this approach may not be feasible if the soil contains a high percentage of organic material and trapped gases, causing the pore pressure readings to be too high and not drop off as consolidation occurs.

Since both approaches have limitations and uncertainties, it is generally desirable to analyze the embankment using both approaches, to have available a backup plan to control the rate of fill placement, if the field data proves difficult to interpret. Furthermore, if the effective stress method is used, a total stress analysis should in general always be conducted to obtain an estimate of the time required to build the fill for contract bidding purposes.

Detailed procedures for both approaches are provided in the sections that follow. These procedures have been developed based on information provided in Ladd (1991), Symons (1976), Skempton and Bishop (1955), R. D. Holtz (personal communication, 1993), S. Sharma (personal communication, 1993), and R. Cheney (personal communication, 1993). Examples of the application of these procedures are provided in Appendix 9-A.

9.3.1.1 Design Parameters

First, define the problem in terms of embankment geometry, soil stratigraphy, and water table information.

The geotechnical designer must make some basic assumptions regarding the fill properties. Typically, the designer assumes presumptive values for the embankment fill, since the specific source of the fill material is usually not known at the time of design. However, specialized soils laboratory tests should be performed for the soft underlying soils. From undisturbed samples, the geotechnical designer should obtain Unconsolidated Undrained (UU) triaxial tests and Consolidated Undrained (CU) triaxial tests with pore pressure measurements. These tests should be used to determine the initial undrained shear strength available. The CU test with pore pressure measurements should also be used to determine the shear strength envelope needed for total or effective stress analyses. In addition, the geotechnical designer should obtain consolidation test data to determine compressibility of the soft underlying soils as well as the rate of consolidation for the compressible strata (C_v). C_v will be an important parameter for determining the amount of time required during consolidation to gain the soil shear strength needed.

In general triaxial tests should be performed at the initial confining stress (P_o') for the sample as determined from the unit weight and the depth that the sample was obtained.

$$P_o' = D\gamma' \quad (9\text{-}1)$$

Where:
D = Sample Depth in feet
γ' = Effective Unit Weight (pcf)

The third point in the triaxial test is usually performed at $4P_o'$. During the triaxial testing it is important to monitor pore pressure to determine the pore pressure parameters A and B. Note that A and B are not constant but change with the stress path of the soil. These parameters are defined as follows:

$$A = \Delta U / \Delta\sigma_1 \quad (9\text{-}2)$$

$$B = \Delta U / \Delta\sigma_3 \quad (9\text{-}3)$$

9.3.1.2 In-Situ Shear Strength and Determination of Stability Assuming Undrained Loading

The first step in any embankment design over soft cohesive soils is to assess its stability assuming undrained conditions throughout the entire fill construction period. If the stability of the embankment is adequate assuming undrained conditions, there is no need to perform a staged construction design. The UU shear strength data, as well as the initial shear strength from CU tests, can be used for this assessment.

The geotechnical designer should be aware that sample disturbance can result in incorrect values of strength for normally consolidated fine grained soils. Figure 9-4 shows how to correctly obtain the cohesive strength for short term, undrained loading.

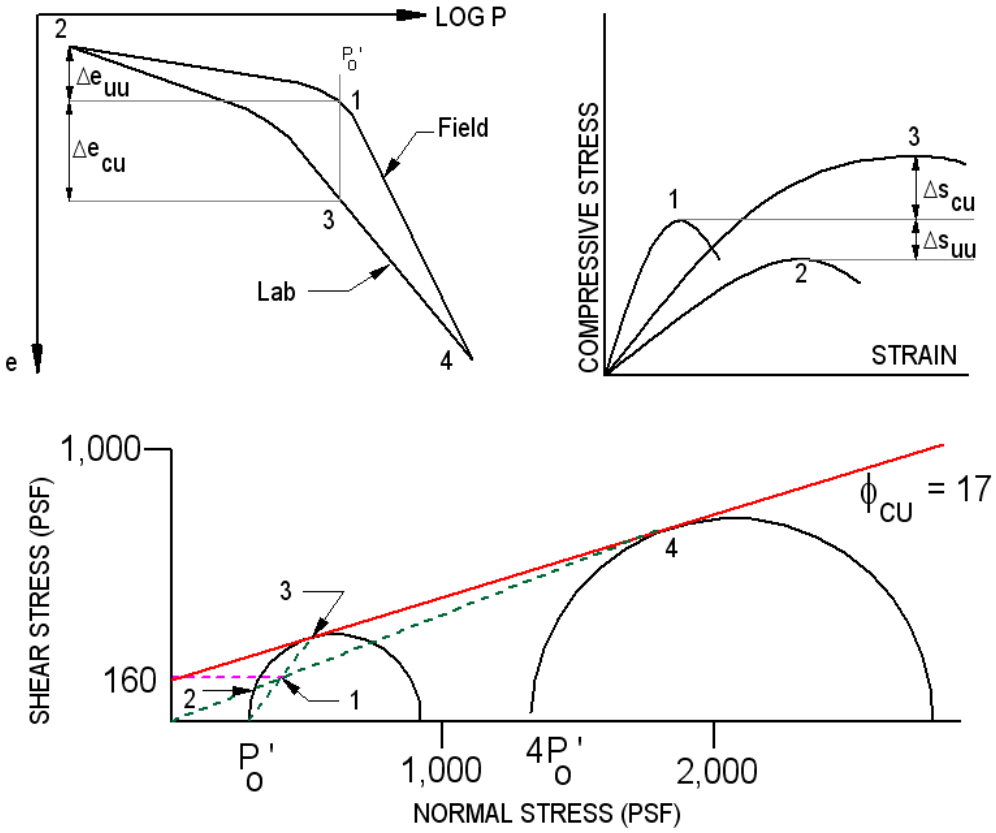

Determination of Short Term Cohesive Shear Strength From the CU Envelope
Figure 9-4

When a normally consolidated sample is obtained, the initial effective stress (P_O') and void ratio correspond to position 1 on the e - Log P curve shown in Figure 9-4. As the stress changes, the sample will undergo some rebound effects and will move towards point 2 on the e – Log P curve. Generally, when a UU test is performed, the sample state corresponds to position 2 on the e – Log P curve. Samples that are reconsolidated to the initial effective stress (P_O') during CU testing undergo a void ratio change and will generally be at point 3 on the e – Log P curve after reconsolidation to the initial effective stress. It is generally assumed that consolidating the sample to 4 times the initial effective stress prior to testing will result in the sample closely approximating the field "virgin" curve behavior.

To determine the correct shear strength for analysis, perform a CU triaxial test at the initial effective stress (P_O') and as close as practical to $4P_O$'. On the Mohr diagram draw a line from the ordinate to point 4, and draw a second line from P_O' to point 3. Where the two lines intersect, draw a line to the shear stress axis to estimate the correct shear strength for analysis. In Figure 9-4, the cohesion intercept for the CU strength envelope (solid line) is 150 psf. The corrected strength based on the construction procedure in Figure 9-4 would be 160 psf. While the difference is slight in this example, it may be significant for other projects.

Once the correct shear strength data has been obtained, the embankment stability can be assessed. If the embankment stability is inadequate, proceed to performing a total stress or effective stress analysis, or both.

9.3.1.3 Total Stress Analysis

The CU triaxial test is ideally suited to staged fill construction analysis when considering undrained strengths. A CU test is simply a series of UU tests performed at different confining pressures. In the staged construction technique, each embankment stage is placed under undrained conditions (i.e., "U" conditions). Then the soil beneath the embankment stage is allowed to consolidate under drained conditions, which allows the pore pressure to dissipate and the soil strength to increase (i.e., "C" conditions).

In most cases, the CU envelope cannot be used directly to determine the strength increase due to the consolidation stress placed on the weak subsoil. The stress increase from the embankment fill is a consolidation stress, not necessarily the normal stress on potential failure planes in the soft soil, and with staged construction excess pore pressures due to overburden increases are allowed to partially dissipate. Figure 9-5 illustrates how to determine the correct strength due to consolidation and partial pore pressure dissipation.

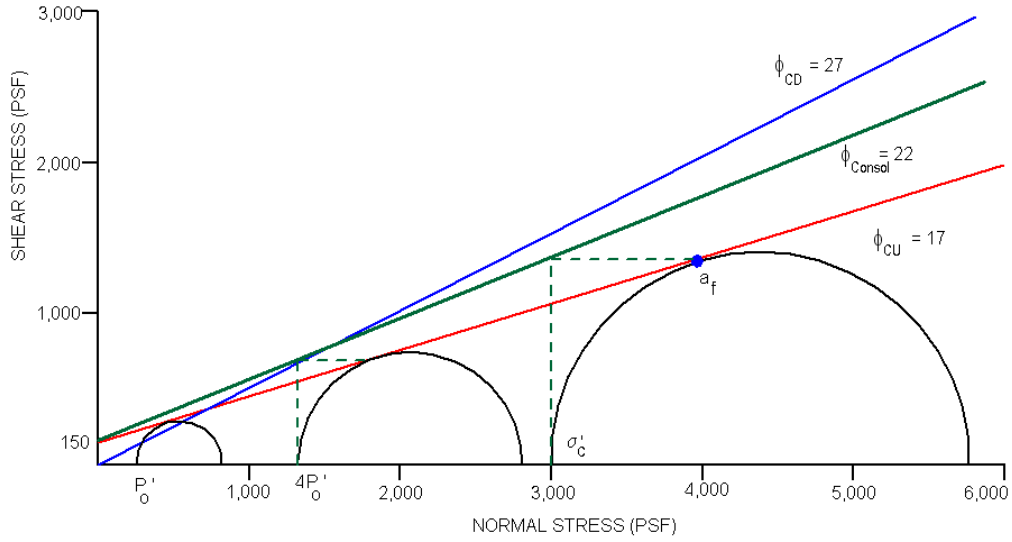

Consolidated Strength Construction From Triaxial Data
Figure 9-5

To correct φ_{cu} for the effects of consolidation use the following (see Ladd, 1991):

$$af/\sigma'c = \tan \varphi_{consol} \quad (9\text{-}4)$$

$$\tan \varphi_{consol} = \sin \varphi_{cu}/(1-\sin \varphi_{cu}) \quad (9\text{-}5)$$

Determine the strength gain (ΔCuu) by multiplying the consolidation stress increase ($\Delta\sigma_v$) by the tangent of φ_{consol}. The consolidation stress increase is the increased effective stress in the soft subsoil caused by the embankment fill.

$$\Delta Cuu = \Delta\sigma_v \tan\varphi_{consol} \quad (9\text{-}6)$$

This is an undrained strength and it is based on 100% consolidation. When constructing embankments over soft ground using staged construction practices, it is often not practical to allow each stage to consolidate to 100%. Therefore, the strengths used in the stability analysis need to be adjusted for the consolidation stress applied and the degree of consolidation achieved in the soft soils within the delay period between fill stages. The strength at any degree of consolidation can be estimated using:

$$Cuu_{u\%} = Cuu_i + U(Cuu) = Cuu_i + U\Delta\sigma_v \tan\varphi_{consol} \quad (9\text{-}7)$$

The consolidation is dependent upon the time (t), drainage path length (H), coefficient of consolidation (C_v), and the Time Factor (T). From Holtz and Kovacs (1981), the following approximation equations are presented for consolidation theory:

$$T = tC_v/H^2 \quad (9\text{-}8)$$

Where:

$$T = 0.25\pi U^2; \text{ for } U < 60\% \quad (9\text{-}9)$$

and,

$$T = 1.781 - 0.933\log(100 - U\%); \text{ for } U > 60\% \quad (9\text{-}10)$$

The geotechnical designer should use these equations along with specific construction delay periods (t) to determine how much consolidation occurs by inputting a time (t), calculating a Time Factor (T), and then using the Time Factor (T) to estimate the degree of consolidation (U).

Once all of the design parameters are available, the first step in a total stress staged fill construction analysis is to use the initial undrained shear strength of the soft subsoil to determine the maximum height to which the fill can be built without causing the slope stability safety factor to drop below the critical value. See Section 9.3.1.1.2 for determination of the undrained shear strength needed for this initial analysis.

In no case shall the interim factor of safety at any stage in the fill construction be allowed to drop below 1.15. A higher critical value should be used (i.e., 1.2 or 1.25) if uncertainty in the parameters is high, or if the soft subsoil is highly organic. At the end of the final stage, determine the time required to achieve enough consolidation to obtain the minimum long-term safety factor (or resistance factor if structures are involved) required, as specified in Section 9.2.3.1. This final consolidation time will determine at what point the embankment is considered to have adequate long-term stability such that final paving (assuming that long-term settlement has been reduced during that time period to an acceptable level) and other final construction activities can be completed. In general, this final consolidation/strength gain period should be on the order of a few months or less.

Once the maximum safe initial fill stage height is determined, calculate the stress increase resulting from the placement of the first embankment stage using the Boussinesq equation (e.g., see Figures 9-2 and 9-3). Note that because the stress increase due to the embankment load decreases with depth, the strength gain also decreases with depth. To properly account for this, the soft subsoil should be broken up into layers for analysis just as is done for calculating settlement. Furthermore, the stress increase decreases as one moves toward the toe of the embankment. Therefore, the soft subsoil may need to be broken up into vertical sections as well.

Determine the strength gain in each layer/section of soft subsoil by multiplying the consolidation stress increase by the tangent of φ_{consol} (see Equation 9-6), where φ_{consol} is determined as shown in Figure 9-5 and Equation 9-5. This will be an undrained strength. Multiply this UU strength by the percent consolidation that has occurred beneath the embankment up to the point in time selected for the fill stage analysis using Equations 9-7, 9-8, and 9-9 or 9-10. This will be the strength increase that has occurred up to that point in time. Add to this the UU soil strength existing before placement of the first embankment stage to obtain the total UU strength existing after the selected consolidation period is complete. Then perform a slope stability analysis to determine how much additional fill can be added with consideration to the new consolidated shear strength to obtain the minimum acceptable interim factor of safety.

Once the second embankment stage is placed, calculation of the percent consolidation and the strength gain gets more complicated, as the stress increase due to the new fill placed is just starting the consolidation process, while the soft subsoil has already had time to react to the stress increase due to the previous fill stage. Furthermore, the soft subsoil will still be consolidating under the weight of the earlier fill stage. This is illustrated in Figure 9-6. For simplicity, a weighted average of the percent consolidation that has occurred for each stage up to the point in time in question should be used to determine the average percent consolidation of the subsoil due to the total weight of the fill.

Continue this calculation process until the fill is full height. It is generally best to choose as small a fill height and delay period increment as practical, as the conservatism in the consolidation time estimate increases as the fill height and delay time increment increases. Typical fill height increments range from 2 to 4 feet, and delay period increments range from 10 to 30 days.

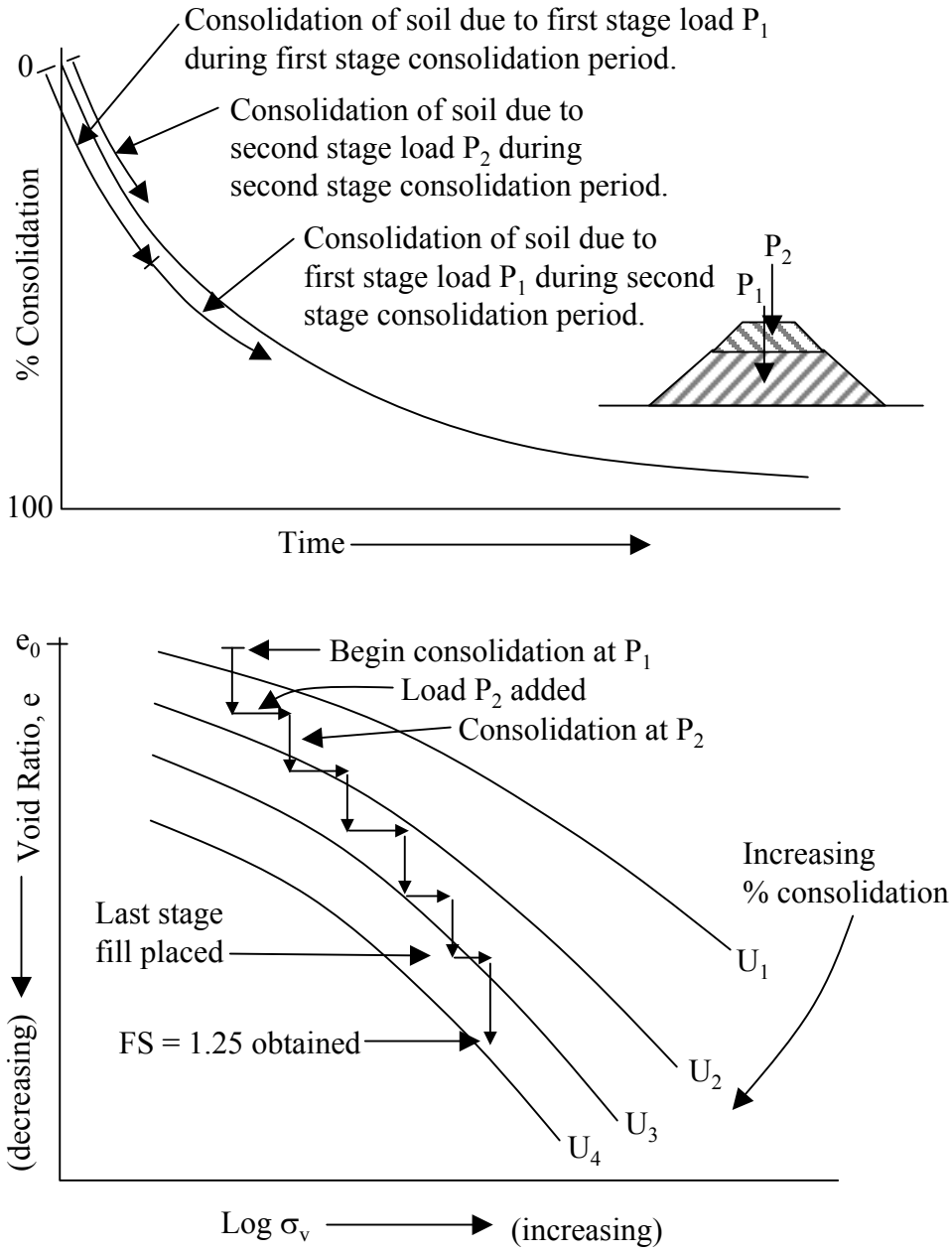

Concepts Regarding the Percent Consolidation Resulting From Placement of Multiple Fill Stages
Figure 9-6

9.3.1.4 Effective Stress Analysis

In this approach, the drained soil strength, or φ_{CD}, is used to characterize the strength of the subsoil. Of course, the use of this soil strength will likely indicate that the embankment is stable, whereas the UU strength data would indicate that the embankment is unstable (in this example). It is the buildup of pore pressure during embankment placement that causes the embankment to become unstable. The amount of pore pressure buildup is dependent on how rapidly the embankment load is placed. Given enough time, the pore pressure buildup will dissipate and the soil will regain its effective strength, depending on the permeability and compressibility of the soil.

The key to this approach is to determine the amount of pore pressure buildup that can be tolerated before the embankment safety factor drops to a critical level, using φ_{CD} for the soil strength and conducting a slope stability analysis (see Chapter 7). A slope stability computer program such as XSTABL can be used to determine the critical pore pressure increase directly. This pore pressure increase can then be used to determine the pore pressure ratio, ru, which is often used to compare with in-situ pore pressure measurements. The pore pressure ratio, r_u, is defined as shown in Figure 9-7.

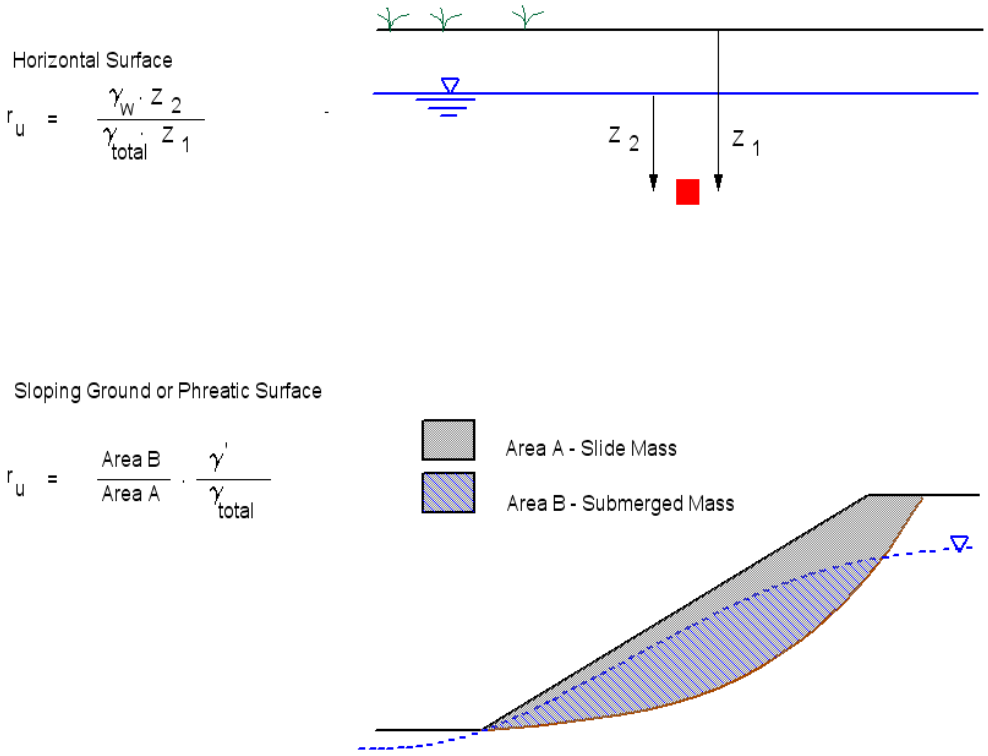

Pore Pressure Ratio Concepts
Figure 9-7

For XSTABL, the critical pore pressure increase is input into the program as a "pore pressure constant" for each defined soil unit in the soil property input menu of the program. This pore pressure is in addition to the pore pressure created by the static water table. Therefore, a water table should also be included in the analysis. Other slope stability programs have similar pore pressure features that can be utilized.

To determine the pore pressure increase in the soft subsoil to be input into the stability analysis, calculate the vertical stress increase created by the embankment at the original ground surface, for the embankment height at the construction stage being considered. Based on this, determine the vertical stress increase, Δσv, using the Boussinesq stress distribution (e.g., Figures 9-2 and 9-3), at various depths below the ground surface, and distances horizontally from the embankment centerline, in each soil unit which pore pressure buildup is expected (i.e., the soft silt or clay strata which are causing the stability problem). Based on this, and using Ko, the at rest earth pressure coefficient, to estimate the horizontal stress caused by the vertical stress increase, determine the pore pressure increase, Δu_p, based on the calculated vertical stress increase, Δσv, as follows:

$$\Delta u_p = B(\Delta\sigma_{oct} + a\Delta\tau_{oct})(1\text{-}U) \quad (9\text{-}11)$$

The octahedral consolidation stress increase at the point in question, $\Delta\sigma_{oct.}$ is determined as follows:

$$\Delta\sigma_{oct.} = (\Delta\sigma_1 + \Delta\sigma_2 + \Delta\sigma_3)/3 = (\Delta\sigma_v + K_0\Delta\sigma_v + K_0\Delta\sigma_v)/3 = (1 + 2K_0)\Delta\sigma v/3 \quad (9\text{-}12)$$

Where:

B = pore pressure parameter which is dependent on the degree of saturation and the compressibility of the soil skeleton. B is approximately equal to 1.0 for saturated normally consolidated silts and clays.

$\Delta\sigma_{oct}$ = the change in octahedral consolidation stress at the point in the soil stratum in question due to the embankment loading,

a = Henkel pore pressure parameter that reflects the pore pressure increase during shearing. "a" is typically small and can be neglected unless right at failure. If necessary, "a" can be determined from triaxial tests and plotted as a function of strain or deviator stress to check if neglecting "a" is an acceptable assumption.

$\Delta\tau_{oct}$ = the change in octahedral shear stress at the point in the soil stratum in question due to the embankment loading,

U = the percent consolidation, expressed as a decimal, under the embankment load in question.

$$\Delta\tau_{oct} = [(\Delta\sigma_1 - \Delta\sigma_2)^2 + (\Delta\sigma_2 - \Delta\sigma_3)^2 + (\Delta\sigma_3 - \Delta\sigma_1)^2]^{½} \quad (9\text{-}13)$$

In terms of vertical stress, before failure, this equation simplifies to:

$$\Delta\tau_{oct} = 1.414\Delta\sigma_v(1 - K_0) \quad (9\text{-}14)$$

In this analysis, since only consolidation stresses are assumed to govern pore pressure increase, and strength gain as pore pressure dissipates (i.e., the calculation method is set up to not allow failure to occur), it can be assumed that "a" is equal to zero. Therefore, Equation 9-11 simplifies to:

$$\Delta u_p = B[(1 + 2K_0)/3]\Delta\sigma_v(1\text{-}U) \quad (9\text{-}15)$$

where, $K_0 = 1 - \sin\varphi_{CD}$ for normally consolidated silts and clays.

Estimate the slope stability factor of safety, determining Δu_p at various percent consolidations (i.e., iterate) to determine the maximum value of Δu_p that does not cause the slope stability interim safety factor to drop below the critical value (see Section 9.3.1.3).

Now determine ru as follows:

$$r_u = \Delta u_p/\Delta\sigma_{v.} = B[(1 + 2K_0)/3]\Delta\sigma_v(1\text{-}U)/\Delta\sigma_v = B[(1 + 2K_0)/3](1\text{-}U) \quad (9\text{-}16)$$

The pore pressures measured by the piezometers in the field during embankment construction are the result of vertical consolidation stresses only (Boussinesq distribution). Most experts on this subject feel that pore pressure increase due to undrained shearing along the potential failure surface does not occur until failure is actually in progress and may be highly localized at the failure surface. Because of this, it is highly unlikely that one will be able to measure pore pressure increase due to shearing along the failure surface using piezometers installed below the

embankment unless one is lucky enough to have installed a piezometer in the right location and happens to be taking a reading as the embankment is failing. Therefore, the pore pressure increase measured by the piezometers will be strictly due to consolidation stresses.

Note that ru will vary depending on the embankment height analyzed. ru will be lowest at the maximum embankment height, and will be highest at the initial stages of fill construction. Therefore, r_u should be determined at several embankment heights.

9.3.2 Base reinforcement

Base reinforcement may be used to increase the factor of safety against slope failure. Base reinforcement typically consists of placing a geotextile or geogrid at the base of an embankment prior to constructing the embankment. Base reinforcement is particularly effective where soft/weak soils are present below a planned embankment location. The base reinforcement can be designed for either temporary or permanent applications. Most base reinforcement applications are temporary, in that the reinforcement is needed only until the underlying soil's shear strength has increased sufficiently as a result of consolidation under the weight of the embankment (see Section 9.3.1). Therefore, the base reinforcement does not need to meet the same design requirements as permanent base reinforcement regarding creep and durability. For example, if it is anticipated that the soil will gain adequate strength to meet stability requirements without the base reinforcement within 6 months, then the creep reduction factor determined per WSDOT Standard Practice T925 could be based on, say, a minimum 1 year life, assuming deformation design requirements are met. Other than this, only installation damage would need to be addressed, unless unusual chemical conditions exist that could cause rapid strength degradation. Alternatively, the values of T_{al} provided in the WSDOT Qualified Products List (QPL) could be used, but will be conservative for this application. However, if it is anticipated that the soil will never gain enough strength to cause the embankment to have the desired level of stability without the base reinforcement, the long-term design strengths provided in the QPL or as otherwise determined using T925 for a minimum 75 year life shall be used.

The design of base reinforcement is similar to the design of a reinforced slope in that limit equilibrium slope stability methods are used to determine the strength required to obtain the desired safety factor (see Chapter 15). The detailed design procedures provided by Holtz, et al. (1995) should be used for embankments utilizing base reinforcement.

Base reinforcement materials should be placed in continuous longitudinal strips in the direction of main reinforcement. Joints between pieces of geotextile or geogrid in the strength direction (perpendicular to the slope) should be avoided. All seams in the geotextiles should be sewn and not lapped. Likewise, geogrids should be linked with mechanical fasteners or pins and not simply overlapped. Where base reinforcement is used, the use of gravel borrow, instead of common or select borrow, may also be appropriate in order to increase the embankment shear strength.

9.3.3 Ground Improvement

Ground improvement can be used to mitigate inadequate slope stability for both new and existing embankments, as well as reduce settlement. The primary ground improvement techniques to mitigate slope stability fall into two general categories, namely densification and altering the soil composition. Chapter 11 Ground Improvement, should be reviewed for a more detailed discussion and key references regarding the advantages and disadvantages of these techniques, applicability for the prevailing subsurface conditions, construction considerations, and costs. In addition to the two general categories of ground improvement identified above, wick drains (discussed in Chapter 11 and Section 9.4.1) may be used in combination with staged embankment construction to accelerate strength gain and improve stability, in addition to accelerating long-term settlement. The wick drains in effect drastically reduce the drainage path length, thereby accelerating the rate of strength gain. Other ground improvement techniques such as stone columns can function to accelerate strength gain in the same way as wick drains, though the stone columns also reduce the stress applied to the soil, thereby reducing the total strength gain obtained. See Chapter 11 for additional guidance and references to use if this technique is to be implemented.

9.3.4 Lightweight Fills

Lightweight embankment fill is another means of improving embankment stability. Lightweight fills are generally used for two conditions: the reduction of the driving forces contributing to instability, and reduction of potential settlement resulting from consolidation of compressible foundation soils. Situations where lightweight fill may be appropriate include conditions where the construction schedule does not allow the use of staged construction, where existing utilities or adjacent structures are present that cannot tolerate the magnitude of settlement induced by placement of typical fill, and at locations where post-construction settlements may be excessive under conventional fills.

Lightweight fill can consist of a variety of materials including polystyrene blocks (geofoam), light weight aggregates (rhyolite, expanded shale, blast furnace slag, fly ash), wood fiber, shredded rubber tires, and other materials. Lightweight fills are infrequently used due to either high costs or other disadvantages with using these materials.

9.3.4.1 Geofoam

Geofoam is approximately 1/100th the weight of conventional soil fill and, as a result, is particularly effective at reducing driving forces or settlement potential. Typical geofoam embankments consist of the foundation soils, the geofoam fill, and a pavement system designed to transfer loads to the geofoam. Geofoam dissolves readily in gasoline and other organic fluids/vapors and therefore must be encapsulated where such fluids can potentially reach the geofoam. Other design considerations for geofoam include creep, flammability, buoyancy, moisture absorption, photo-degradation, and differential icing of pavement constructed over geofoam. Furthermore, geofoam should not be used where the water table could rise and cause buoyancy problems, as geofaom will float. Design guidelines for geofoam embankments are provided in the NCHRP document titled *Geofoam Applications in the Design and Construction of Highway Embankments* (Stark et al., 2004). Additional information on the design properties and testing requirements are provided in Chapter 5.

9.3.4.2 Lightweight Aggregates

Mineral aggregates, such as expanded shales, rhyolite, fly ash, or blast furnace slags, can also be used as lightweight fill materials. Expanded shales and rhyolite materials consist of inert mineral aggregates that have similar shear strengths to many conventional fill materials, but weigh roughly half as much. The primary disadvantage with expanded shales and rhyolite is that these materials are expensive. Fly ash can also be used for lightweight fill; however, fly ash is difficult to place and properly control the moisture condition. Blast furnace slag is another waste material sometimes used for lightweight fill. Due to the weight of blast furnace slag, it is not as effective as other lightweight fill materials. Also, slag materials have been documented to swell when hydrated, potentially damaging improvements founded above the slag. The chemical composition of fly ash and blast furnace slag should be investigated to confirm that high levels of contaminants are not present. Due to the potential durability and chemical issues associated with some light weight aggregates, approval from the State Geotechnical Engineer is required before such materials may be considered for use in embankments.

9.3.4.3 Wood Fiber

Wood fibers may also be used for lightweight fill. For permanent applications, only fresh wood fiber should be used to prolong the life of the fill. Wood fiber fills typically have unit weights between about 35 to 55 pcf. To mitigate the effects of leachate, the amount of water entering the wood should be minimized. Wood fiber fill will experience creep settlement for several years and some pavement distress should be expected during that period. See Chapter 5 for more information regarding wood fiber fills.

9.3.4.4 Scrap (Rubber) Tires

In 1996, a moratorium on the use of scrap tires as embankment fill was put into effect due to several instances where the tire fills caught fire due to some type of exothermic reaction which has yet to be fully defined. A report to the Washington State legislature was published in 2003 to address whether or not, and under what circumstances, the moratorium on the use of scrap tires as fill should be lifted (Baker, et al., 2003). Based on that report, scrap tire fills up to 10 feet in thickness may be considered, provided that they are designed and specified as described in Baker, et al. (2003).

9.3.4.5 Light Weight Cellular Concrete

Large quantities of air can be entrained into concrete to produce a very light weight porous concrete that can be poured in place of soil to reduce the driving force to improve stability or reduce settlement. Typical unit weights feasible range from 20 to 80 pcf, and relative to soil, its shear strength is fairly high. However, if significant differential settlement is still anticipated in spite of the use of the light weight concrete, due to its relatively brittle nature, the concrete could crack, losing much of its shear strength. This should be considered if using light weight cellular concrete. Its cost can be quite high, being among the most expensive of the light weight fill materials mentioned herein.

9.3.4.6 Toe Berms and Shear keys

Toe berms and shear keys are each methods to improve the stability of an embankment by increasing the resistance along potential failure surfaces. Toe berms are typically constructed of granular materials that can be placed quickly, do not require much compaction, but have relatively high shear strength. As implied by the name, toe berms are constructed near the toe of the embankment slopes where stability is a concern. The toe berms are often inclined flatter than the fill embankment side slopes, but the berm itself should be checked for stability. The use of berms may increase the magnitude of settlements as a consequence of the increased size of the loaded area.

Toe berms increase the shearing resistance by:

- Adding weight, and thus increasing the shear resistance of granular soils below the toe area of the embankment;
- Adding high strength materials for additional resistance along potential failure surfaces that pass through the toe berm; and
- Creating a longer failure surface, thus more shear resistance, as the failure surface now must pass below the toe berm if it does not pass through the berm.

Shear keys function in a manner similar to toe berms, except instead of being adjacent to and incorporating the toe of the fill embankment, the shear key is placed under the fill embankment—frequently below the toe of the embankment. Shear keys are best suited to conditions where they key can be embedded into a stronger underlying formation. Shear keys typically range from 5 to 15 feet in width and extend 4 to 10 feet below the ground surface. They are typically backfilled with quarry spalls or similar materials that are relatively easy to place below the groundwater level, require minimal compaction, but still have high internal shear strength. Like toe berms, shear keys improve the stability of the embankment by forcing the potential failure surface through the strong shear key material or along a much longer path below the shear key.

9.4 Settlement Mitigation

9.4.1 Acceleration Using Wick Drains

Wick drains, or prefabricated drains, are in essence vertical drainage paths that can be installed into compressible soils to decrease the overall time required for completion of primary consolidation. Wick drains typically consist of a long plastic core surrounded by a geotextile. The geotextile functions as a separator and a filter to keep holes in the plastic core from being plugged by the adjacent soil, and the plastic core provides a means for the excess pore water pressures to dissipate. A drainage blanket is typically placed across the ground surface prior to installing the wick drains and provides a drainage path beneath the embankment for water flowing from the wick drains.

The drains are typically band-shaped (rectangular) measuring a few inches wide in plan dimension. They are attached to a mandrel and are usually driven/pushed into place using either static or vibratory force. After the wick drains are installed, the fill embankment and possibly surcharge fill are placed above the drainage blanket. A key consideration for the use of wick drains is the site conditions. If obstructions or a very dense or stiff soil layer is located above the compressible layer, pre-drilling may be necessary. The use of wick drains to depths over about 60 feet require specialized equipment.

The primary function of a wick drain is to reduce the drainage path in a thick compressible soil deposit. As noted in Section 9.3.3, a significant factor controlling the time rate of settlement is the length of the drainage path. Since the time required for a given percentage consolidation completion is related to the square of the drainage path, cutting the drainage path in half would reduce the consolidation time to one-fourth the initial time, all other parameters held constant. However, the process of installing the wick drains creates a smear zone that can impede the drainage. The key design issue is maximizing the efficiency of the spacing of the drains, and one of the primary construction issues is minimizing the smear zone around the drains. A full description of wick drains, design considerations, example designs, guideline specifications, and installation considerations are provided by reference in Chapter 11. Section 2-03.3(14) H of the WSDOT *Standard Specifications* addresses installation of prefabricated vertical drains.

9.4.2 Acceleration Using Surcharges

Surcharge loads are additional loads placed on the fill embankment above and beyond the design height. The primary purpose of a surcharge is to speed up the consolidation process. The surcharges speed up the consolidation process because the percentage of consolidation required under a surcharge will be less than the complete consolidation under the design load. As noted previously, it is customary to assume consolidation is essentially complete at the theoretical 90% completion stage, where $T = 0.848$. In comparison, $T = 0.197$ for 50% consolidation. Therefore it takes less than one-fourth the time to achieve an average of 50% consolidation in a soil layer than it does to achieve 90%. In this example, the objective would be to place a surcharge sufficiently large such that 50% of the total settlement estimated from the fill embankment and the surcharge is equal to or greater than 100 percent of the settlement estimated under the fill embankment alone at its design height. Based on previous experience, the surcharge fill needs to be at least one-third the design height of the embankment to provide any significant time savings.

In addition to decreasing the time to reach the target settlement, surcharges can also be used to reduce the impact of secondary settlement. Similar to the example presented above, the intent is to use the surcharge to pre-induce the settlement estimated to occur from primary consolidation and secondary compression due to the embankment load. For example, if the estimated primary consolidation under an embankment is 18 inches and secondary compression is estimated at an additional 6 inches over the next 25 years, then the surcharge would be designed to achieve 24 inches of settlement or greater under primary consolidation only. The principles of the design of surcharges to mitigate long-term settlement provided by Cotton, et al. (1987) should be followed.

Using a surcharge typically will not completely eliminate secondary compression, but it has been successfully used to reduce the magnitude of secondary settlement. However, for highly organic soils or peats where secondary compression is expected to be high, the success of a surcharge to reduce secondary compression may be quite limited. Other more positive means may be needed to address the secondary compression in this case, such as removal.

Two significant design and construction considerations for using surcharges include embankment stability and re-use of the additional fill materials. New fill embankments over soft soils can result in stability problems as discussed in Section 9.3. Adding additional surcharge fill would only exacerbate the stability problem. Furthermore, after the settlement objectives have been met, the surcharge will need to be removed. If the surcharge material cannot be moved to another part of the project site for use as site fill or as another surcharge, it often not economical to bring the extra surcharge fill to the site only to haul it away again. Also, when fill soils must be handled multiple times (such as with a "rolling" surcharge), it is advantageous to use gravel borrow to reduce workability issues during wet weather conditions.

9.4.3 Lightweight Fills

Lightweight fills can also be used to mitigate settlement issues as indicated in Section 9.3.4. Lightweight fills reduce the new loads imposed on the underlying compressible soils, thereby reducing the magnitude of the settlement. See Chapter 5 and Section 9.3.4 for additional information on light weight fill.

9.4.4 Over-excavation

Over-excavation simply refers to excavating the soft compressible soils from below the embankment footprint and replacing these materials with higher quality, less compressible soil. Because of the high costs associated with excavating and disposing of unsuitable soils as well as the difficulties associated with excavating below the water table, over-excavation and replacement typically only makes economic sense under certain conditions. Some of these conditions include, but are not limited to:

- The area requiring overexcavation is limited;
- The unsuitable soils are near the ground surface and do not extend very deep (typically, even in the most favorable of construction conditions, over-excavation depths greater than about 10 feet are in general not economical);
- Temporary shoring and dewatering are not required to support or facilitate the excavation;
- The unsuitable soils can be wasted on site; and
- Suitable excess fill materials are readily available to replace the over-excavated unsuitable soils.

9.5 Construction Considerations and PS&E Development

Consideration should be given to the time of year that construction will likely occur. If unsuitable soil was encountered during the field investigation, the depth and station limits for removal should be provided on the plans. Chapter 530 of the WSDOT *Design Manual* provides guidance for the use of geotextile for separation or soil stabilization (see also Chapter 16). Note that for extremely soft and wet soil, a site specific design should be performed for the geotextile.

Hillside Terracing is specified in Section 2-03.3(14) of the WSDOT *Standard Specifications*. Where embankments are built on existing hillsides or existing embankment slopes, the existing surface soil may form a plane of weakness unless the slope is terraced or stepped. Terracing breaks up the plane, increasing the strength of the entire system. Generally slopes that are 3H:1V or steeper should be terraced

to improve stability. However there may be specific cases where terracing may be waived during design, such as when the existing slope is steeper than 1H:1V and benching would destabilize the existing slope.

The compaction requirements in the WSDOT *Standard Specifications* apply to the entire embankment, including near the sloping face of the embankment. For embankment slopes of 2H:1V or steeper, depending on the embankment soil properties, getting good compaction out to the embankment face can be difficult to achieve, and possibly even unsafe for those operating the compaction equipment. The consequences of poor compaction at the sloping face of the embankment include increased risk of erosion and even surficial slope instability. This issue becomes especially problematic as the embankment slope steepness approaches 1.5H:1V. Surficial stability of embankments (See Chapter 7) should be evaluated during design for embankment slopes of 2H:1V or steeper. The embankment design shall include the use of techniques that will improve embankment face slope stability for embankment slopes steeper than 1.7H:1V, and should consider the use of such techniques for slopes of 2H:1V or steeper.

Approaches typically used to address compaction and surficial stability of embankment slopes include:

- Over-build the embankment laterally at the slope face approximately 2 feet, compact the soil, and then trim off the outer 2 feet of the embankment to produce a well compacted slope face.
- Use strips of geosynthetic placed in horizontal layers at the slope face as a compaction and surficial stability aid (see Elias, et al., 2001). The strips should generally be a minimum of 4 feet wide (horizontally into the slope) and spaced vertically at 1 to 1.5 feet (1.5 feet maximum). The specific reinforcement width and vertical spacing will depend on the soil type. The reinforcement strength required depends on the coarseness and angularity of the backfill material and the susceptibility of the geosynthetic to damage during placement and compaction. See Elias, et al. (2001) for specific guidance on the design of geosynthetic layers as a compaction and surficial stability aid.

Even if good compaction can be obtained using one of these techniques, the potential for erosion and surficial instability should be addressed through appropriate use of slope vegetation techniques such as seeding and mulching, temporary or permanent turf reinforcement mats, or for deeper surficial stability problems, bioengineering. Note that if geosynthetic layers are placed in the soil as a compaction aid or to improve overall embankment slope stability, the typical practice of cultivating the upper 1 feet of the soil per the WSDOT *Standard Specifications*, Section 8-02, should not be conducted. Instead, the landscape architect who is developing the slope vegetation plan should consult with the HQ Geotechnical Division to insure that the slope vegetation plan (either per the WSDOT *Standard Specifications* or any special provisions developed) does not conflict with the slope geosynthetic reinforcement and the need for good compaction out to the slope face.

9.5.1 Settlement and Pore Pressure Monitoring

If settlement is expected to continue after embankment construction, some type of monitoring program should be provided. Settlement should be monitored, if post construction settlement will affect pavement performance or a settlement sensitive structure will be constructed on the embankment. The type of monitoring will depend on the magnitude and time frame of the settlement. For many monitoring programs, use of survey hubs or monuments and routine surveying methods are adequate. These methods are commonly used if paving should be delayed until embankment settlement is nearly complete. The geotechnical report should include the time period that the settlement should be monitored and the frequency of observations.

Settlement estimates provided in the contract should be conservative. Therefore, if another construction operation must be delayed until the settlement of the embankment is nearly complete, the time estimate should be the longest length of time that is likely to be necessary; then the contractor will not be delayed longer than anticipated.

As discussed in Section 9.3.1, embankments constructed over soft ground may require the use of staged construction to ensure the stability of the embankment. Geotechnical instrumentation is a vital part of construction to monitor field performance and provide information relevant to decisions regarding the rate of construction. The principal parameters monitored during embankment construction are pore water pressure and displacement, both vertical and lateral.

As discussed previously, in relatively impermeable, soft, saturated soil, the applied load from embankment construction increases the pore water pressure. With time, the excess pore water pressure will dissipate and the shear strength will increase. It is important to measure the pore water pressure to determine when it is safe to proceed with additional embankment construction. In such cases it is also useful to measure vertical deformation to assist in the interpretation of the data to assess the rate at which embankment construction should proceed.

9.5.2 Instrumentation

The following discussion of monitoring equipment typically used for embankment construction monitoring provides an overview of the typical equipment available. A more comprehensive discussion of monitoring techniques is available in *Geotechnical Instrumentation for Monitoring Field Performance* (Dunnicliff, 1993) and *Geotechnical Instrumentation Reference Manual*, NHI Course No. 13241 FHWA-HI-98-034 (Dunnicliff, 1998). Additional information on WSDOT policies regarding instrumentation installation and standards is provided in Chapter 3.

9.5.2.1 Piezometers

Three types of piezometers are commonly used to monitor embankment construction: open standpipe, pneumatic and vibrating wire. Each type of piezometer has advantages and disadvantages. The sections below describe the various piezometer types.

Open Standpipe Piezometers – These piezometers are installed in a drilled borehole. A porous zone or screen is installed in the soil layer of interest. For embankment settlement purposes it is necessary to completely seal the porous zone against the inflow of water from shallower zones. Open standpipe piezometers are relatively

simple to install and the water level readings are easy to obtain. However, standpipes may interfere with or be damaged by construction activities and the response time for changes in water pore pressure in low permeability soils is slow. This type of piezometer is generally not very useful for monitoring the pore pressure increase and subsequent decrease due to consolidation in staged construction applications.

Pneumatic Piezometers – Pneumatic piezometers are usually installed in drilled boreholes in a manner similar to standpipe piezometers, but they can be sealed so that increases in pore water pressure result in a smaller volume change and a more rapid response in instrument measurement. Pneumatic piezometers do not need open standpipes. However, crimping or rupture of the tubes due to settlement of the embankment can cause failure.

Vibrating Wire Piezometers – Vibrating wire piezometers are usually installed in drilled boreholes; although, models are available for pushing into place in soft soils. The cables can be routed long distances and they are easily connected to automatic data acquisition systems.

9.5.2.2 Instrumentation for Settlement

9.5.2.2.1 Settlement Plates

Settlement plates are used to monitor settlement at the interface between native ground and the overlying fill. They consist of a steel plate welded to a steel pipe. An outer pipe consisting of steel or PVC pipe is placed around the pipe and the embankment is built up around it. Both pipes are extended to the completed surface. The outer pipe isolates the inner pipe from contact with the fill. As the embankment and soil surface settle, the top of the inner pipe can be monitored with standard survey equipment. These devices are simple to use, but provide data at only one point and are subject to damage during construction.

9.5.2.2.2 Pneumatic Settlement Cells

These cells are generally placed at the interface between the embankment fill and native ground. A flexible tube is routed to a reservoir, which must be located away from the settlement area. The reservoir must be kept at a constant elevation. The precision of the cells is about 0.75 inches.

9.5.2.2.3 Sondex System

The Sondex System can be used for monitoring settlement at several points at depth. The system is installed in a borehole and consists of a series of stainless steel wire loops on a plastic corrugated pipe. The plastic pipe is placed over an access casing and grouted in the borehole. The locations of the stainless steel loops are determined by electrical induction measurements from a readout unit. The loops can be located to about 0.05 inches and displacements of up to 2 inches can be measured. Accurate measurement of settlement depends on the compatibility of the soil and grout. Therefore, if the grout mix has a higher strength than the surrounding soil, not all the settlement will be measured.

9.5.2.2.4 Horizontal Inclinometer

Horizontal inclinometers are used to measure vertical deflections in a grooved guide casing, placed horizontally beneath the embankment. The probe is pulled through the casing and readings of inclination relative to horizontal are obtained. The inclinometer is a highly accurate system for obtaining settlement data. Because the length of the inclinometer probe is typically about 2 feet, large displacements of the casing caused by settlement may stop passage of the probe.

9.5.3 PS&E Considerations

Specifications for monitoring equipment that will be supplied by the contractor should ensure that the equipment is compatible with the read out equipment that will be used during construction. The specifications should also make clear who will provide the monitoring and analyze the data. If the contractor's survey crew will collect the settlement data, it should be indicated in the special provisions. It is also important to stipulate who will analyze the data and provide the final determination on when settlement is complete or when additional fill can be placed. In general, the geotechnical designer should analyze and interpret the data.

9.5.4 PS&E Checklist

The following issues should be addressed in the PS&E regarding embankments:

- Slope inclination required for stability
- Embankment foundation preparation requirements, overexcavation limits shown on plans
- Plan details for special drainage requirements such as lined ditches, interceptor trenches, drainage blankets, etc.
- Hillside terracing requirements
- Evaluation of on-site materials
- Special embankment material requirements
- Special treatment required for fill placement such as non-durable rock, plastic soil, or lightweight fill
- Magnitude and time for settlement
- Settlement waiting period estimated in the Special Provisions (SP)
- Size and limits of surcharge
- Special monitoring needs
- If instrumentation is required to control the rate of fill placement, do the SP's clearly spell out how this will be done and how the readings will be used to control the contractor's operation
- SP's clearly state that any instrumentation damaged by contractor personnel will be repaired or replaced at no cost to the state
- Settlement issues with adjacent structures, should construction of structures be delayed during embankment settlement period
- Monitoring of adjacent structures

9.5.5 Requirements for Temporary Fills for Construction Facilitation

Temporary fills for haul roads, construction equipment access, and other temporary construction activities shall be designed in accordance with this GDM, in particular this chapter (Chapter 9), except as noted in the following subsections.

9.5.5.1 Design Requirements

The design of the temporary fill/fill slope shall address the stability and settlement of the temporary fill itself as well as the impact of the temporary fill on the global stability and deformation of the of the overall slope on which the fill is located. The stability and movement of any temporary structures and construction equipment (e.g., cranes, compaction equipment, etc.) placed on the temporary fill shall also be addressed in the design. Temporary fills and fill slopes shall be designed such that the risk to health and safety of workers and the public is kept to an acceptable level and that adjacent facilities are not damaged. Seismic design of temporary fills and fill slopes is not required.

If temporary fills are placed on or adjacent to permanent or temporary structures, the impact of the temporary fill on those structures, both with regard to stability and lateral and vertical movements, shall be assessed. The functioning and design life of those structures shall not be compromised by the placement of the temporary fill.

If temporary walls are used to support the temporary fill, the impact of the temporary fill on the wall stability and deformations shall be addressed, and the design of the temporary wall shall meet the requirements in Chapter 15 and the AASHTO LRFD Bridge Design Specifications.

As a minimum, the design of temporary fill slopes for stability by or under the supervision of a registered professional engineer shall include geotechnical calculations to address slope stability (i.e., Chapter 7). If the fill is placed over relatively soft to very soft ground, the deformation of the fill shall also be determined through engineering calculations (i.e., Chapter 9) that are based on a knowledge of the subsurface conditions present and engineering data that can be used to estimate soil and rock properties. Such calculations shall also address the effect of ground water conditions and the loading conditions on or above the slope that could affect its stability and deformation. The design shall be conducted in accordance with the requirements in this GDM and referenced documents. Engineering recommendations based upon field observations alone shall not be considered to be an engineering design, unless the fill is a low height (less than 10 feet high) granular, cohesionless well-compacted fill without concentrated loads from large equipment or structure supports, and the fill is placed over dense to very dense soil or rock, in which the supporting soil or rock is not affected by fissures, slickensides, or other localized weaknesses.

9.5.5.2 Safety Factors and Design Life Considerations

For temporary fill slopes, the safety factors specified in Section 9.2.3.1 are applicable. If the soil properties are well defined and shown to have low variability, a lower factor of safety may be justified through the use of the Monte Carlo simulation feature available in slope stability analysis computer programs. In this case, a probability of failure of 0.01 or smaller shall be targeted (Santamarina, et al., 1992). However, even with this additional analysis, in no case shall a slope stability safety factor less than 1.2 be used for design of the temporary fill slope.

9.5.5.3 Design Loads

The design of temporary fills and fill slopes shall address the actual construction-related loads that could be imposed on the temporary fill. As a minimum, the temporary fill shall be designed for a live load surcharge of 250 psf to address routine construction equipment traffic on the fill. For unusual temporary loadings resulting from large cranes or other large equipment placed on the fill, the loading imposed by the equipment shall be specifically assessed and taken into account in the design of the fill. For the case where large or unusual construction equipment loads will be applied to the fill, the construction equipment loads shall still be considered to be a live load, unless the dynamic and transient forces caused by use of the construction equipment can be separated from the construction equipment weight as a dead load, in which case, only the dynamic or transient loads carried or created by the use of the construction equipment need to be considered live load.

If temporary structures (e.g., false work and formwork support) are placed on or adjacent to the temporary fill, the temporary fill shall be designed to carry the loads resulting from the temporary structures and to meet the stability and deformation requirements of those structures.

9.5.5.4 Design Property Selection

In addition to the requirements in Chapter 9 for determination of design properties, the requirements for design property selection for temporary cuts and shoring in Chapters 5 and 15 shall also be considered applicable to temporary fills and fill slopes.

9.5.5.5 Performance Requirements for Temporary Fills and Fill Slopes

Temporary fills and slopes shall be designed to prevent excessive deformation that could result in damage to adjacent facilities, both during fill construction and during the life of the temporary fill. An estimate of expected displacements or vibrations, threshold limits that would trigger remedial actions, and a list of potential remedial actions if thresholds are exceeded should be developed. Thresholds shall be established to prevent damage to adjacent facilities, as well as degradation of the soil properties due to deformation.

The removal of the temporary fill shall not adversely impact adjacent structures and facilities.

9.5.5.6 Temporary Fill Submittal and Submittal Review Requirements

Temporary Fill submittals shall generally meet the requirements in Section 2-09.3(3)B of the *Standard Specifications* M 41-10.

When performing a geotechnical review of a contractor temporary fill submittal, the following items should be specifically evaluated:

1. Performance objectives for the temporary fill
   a. Is the anticipated length of time the temporary fill will be in place provided?
   b. Are objectives regarding anticipated and allowed deformations of the fill and adjacent and supported structures provided?
   c. Are the performance objectives compatible and consistent with contract and GDM/BDM requirements?
2. Subsurface conditions
   a. Is the soil/rock stratigraphy consistent with the subsurface geotechnical data provided in the contract boring logs?
   b. Did the contractor/fill designer obtain the additional subsurface data needed to meet the geotechnical exploration requirements fills and temporary fill walls as identified in Chapters 9 and 15, respectively?
   c. Was justification for the soil, rock, and other material properties used for the design of the temporary fill provided, and is that justification, and the final values selected, consistent with Chapter 5 and the subsurface field and lab data obtained at the fill site?
   d. Were ground water conditions adequately assessed through field measurements combined with the site stratigraphy to identify zones of ground water, aquitards and aquicludes, artesian conditions, and perched zones of ground water that could impact the stability and deformation of the fill and adjacent facilities that may be impacted by the presence of the temporary fill?
3. Temporary fill loading
   a. Have the anticipated loads on or caused by the temporary fill been correctly identified, considering all applicable limit states?
   b. If construction or public traffic near or on the temporary fill, has a minimum traffic live load surcharge of 250 psf been applied?
   c. If larger construction equipment such as cranes will be placed on the temporary fill, have the loads from that equipment been correctly determined and included in the temporary fill design?

4. Temporary fill design
   a. Have the correct design procedures been used (i.e., the GDM and referenced design specifications and manuals)?
   b. Have all appropriate limit states been considered (e.g., global stability of slopes above and below wall, global stability of wall/slope combination, internal wall stability, external wall stability, bearing capacity, settlement, lateral deformation, piping or heaving due to differential water head, etc.)?
5. Are all safety factors, or load and resistance factors for LRFD temporary wall or structure design, identified, properly justified in a manner that is consistent with the GDM, and meet or exceed the minimum requirements of the GDM?
6. Have the effects of any construction activities adjacent to the temporary fill on the stability/performance of the fill been addressed in the shoring design (e.g., excavation or soil disturbance below the fill, excavation dewatering, vibrations and soil loosening due to soil modification/improvement activities, etc.)?
7. Temporary fill monitoring/testing
   a. Is a monitoring/testing plan provided to verify that the performance of the fill and the structures it supports or impacts is acceptable throughout the design life of the system?
   b. Have appropriate displacement or other performance triggers been provided that are consistent with the performance objectives of the fill and adjacent facilities?
8. Temporary fill removal
   a. Have any portions of the temporary fill (including temporary fill walls used to support the fill) to be left in place after construction of the permanent structure is complete been identified?
   b. Has a plan been provided regarding how to prevent the remaining portions of the temporary fill or walls from interfering with future construction and performance of the finished work (e.g., will the remaining portions impede flow of ground water, create a hard spot, create a surface of weakness regarding slope stability, etc.)?

9.6 References

Baker, T. E., Allen, T. M., Pierce, L. M., Jenkins, D. V., Mooney, D. T., Christie, R. A., and Weston, J. T., 2003, *Evaluation of the Use of Scrap Tires in Transportation Related Applications in the State of Washington*, Report to the Legislature as Required by SHB 2308, WSDOT, 268 pp.

Boussinesq, J., 1885, "Application des Potentiels a L'Etude de L'Equilibre et due Mouvement des Solides Elastiques," Gauthier-Villars, Paris.

Cheney, R. and Chassie, R. 2000. Soils *and Foundations Workshop Reference Manual.* Washington, DC, National Highway Institute Publication NHI-00-045, Federal Highway Administration.

Cotton, D. M., Kilian, A. P., and Allen T 1987, "Westbound Embankment Preload on Rainier Avenue, Seattle, Washington*," Transportation Research Record 1119*, Washington, DC, pp. 61-75.

Dunnicliff, J., 1993, *Geotechnical Instrumentation for Monitoring Field Performance*, NCHRP Synthesis 89, Transportation Research Board.

Elias, V., and Christopher, B.R., and Berg, R. R., 2001, *Mechanically Stabilized Earth Walls and Reinforced Soil Slopes - Design and Construction Guidelines*, No. FHWA-NHI-00-043, Federal Highway Administration, 394 pp.

Federal Highway Administration, 1992, "EMBANK," Computer Program, Users Manual Publication No. FHWA-SA-92-045.

Dunnicliff, J., 1998, *Geotechnical Instrumentation Reference Manual*, NHI Course No. 13241, Module 11. FHWA-HI-98-034, Federal Highway Administration, U.S. Department of Transportation.

Holtz, R. D., and Kovacs, W. D., 1981, *An Introduction to Geotechnical Engineering*, Prentice-Hall, Inc, Eaglewood Cliffs, New Jersey.

Holtz, R. D., Christopher, B. R., and Berg, R. R., 1995, *Geosynthetic Design and Construction Guidelines*, Federal Highway Administration, FHWA HI-95-038.

Ladd, C. C., 1991, "Stability Evaluation During Staged Construction (the 22nd Karl Terzaghi Lecture)," *Journal of Geotechnical Engineering*, ASCE, Vol. 117, No. 4, pp. 540-615.

Machan, G., Szymoniak, T. and Siel, B., 1989, "Evaluation of Shale Embankment Construction Criteria, Experimental Feature Final Report OR 83-02," Oregon State Highway Division, Geotechnical Engineering Group.

NAVFAC, 1971, *Design Manual: Soil Mechanics, Foundations, and Earth Structures*, DM-7. (note: included as Appendix A in US Department of Defense, 2005, *Soil Mechanics*, Unified Facilities Criteria (UFC), UFC 3-220-10N).

Prototype Engineering, Inc., 1993, "SAF-1" Soil Settlement Analyses Software Suite, Winchester, Massachusetts.

Sabatini, P.J, Bachus, R.C, Mayne, P.W., Schneider, J.A., Zettler, T.E 2002, *Geotechnical Engineering Circular 5 (GEC5)* - Evaluation of Soil and Rock Properties. Report No FHWA-IF-02-034. Federal Highway Administration, U.S. Department of Transportation.

Santamarina, J. C., Altschaeffl, A. G., and Chameau, J. L., 1992, "Reliability of Slopes: Incorporating Qualitative Information," Transportation Research Board, TRR 1343, Washington, D.C., pp. 1-5.

Skempton, A. W., and Bishop, A. W., 1955, "The Gain in Stability Due to Pore Pressure Dissipation in a Soft Clay Foundation," *Fifth International Conference on Large Dams*, Paris, pp. 613-638.

Stark, T., Arellano, D., Horvath, J. and Leshchinsky, D., 2004, *Geofoam Applications in the Design and Construction of Highway Embankments*, NCHRP Report 529, Transportation Research Board, 58 pp.

Symons, I. F., 1976, *Assessment and Control of Stability for Road Embankments Constructed on Soft Subsoils*, Transport and Road Research laboratory, Crowthorne, Berkshire, TRRL Laboratory Report 711, 32 pp.

Tonkins, T. and Terranova, T., 1995, "Instrumentation of Transportation Embankments Constructed on Soft Ground," Transportation Research Circular No. 438.

Westergaard, H., 1938, "A Problem of Elasticity Suggested by a Problem in Soil Mechanics: A Soft Material Reinforced by Numerous Strong Horizontal Sheets," *in Contribution to the Mechanics of Solids, Stephen Timoshenko 60th Anniversary Volume,* Macmillan, New York, New York, pp. 268-277.

9-A.1 Problem Setup

First, the geotechnical designer should define the problem in terms of embankment geometry, soil stratigraphy, and water table information. For this example the proposed construction entails constructing a 20 feet thick earth embankment from Gravel Borrow with 2H:1V side slopes. The embankment will have a roadway width of 35 feet and will be constructed over soft silt. The soft silt is 30 feet thick and overlies dense sand. Ground water was observed 2 feet below the existing ground surface during the field exploration.

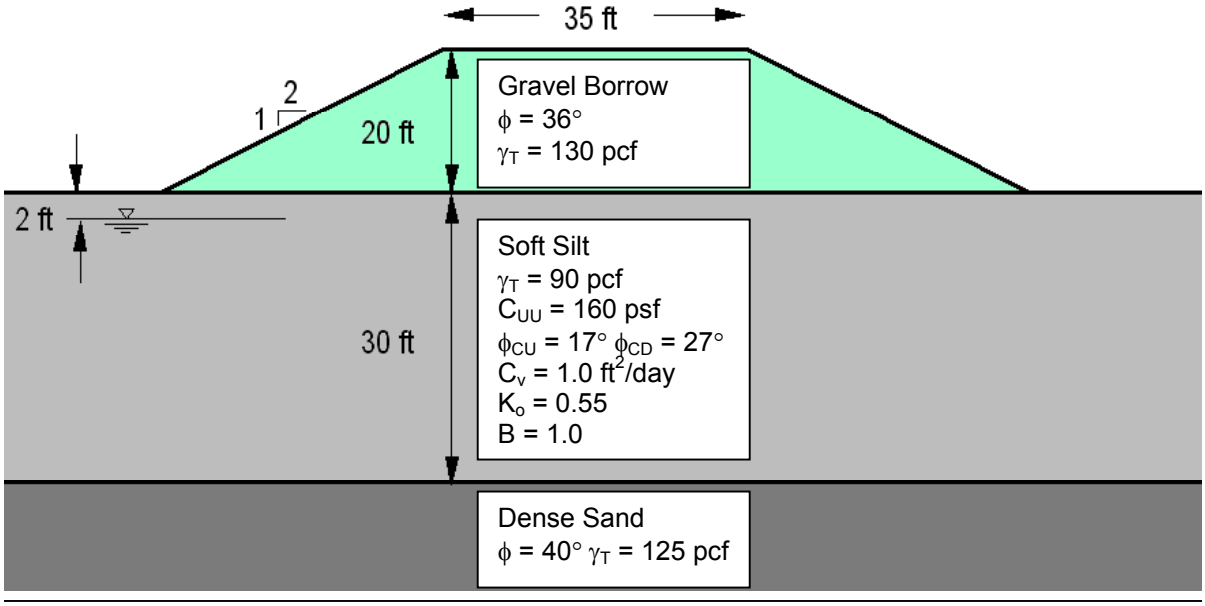

Embankment Geometry for Example
Figure 9-A-1

Using the test results, the geotechnical designer should first assess short term (undrained) strength of the embankment to determine if staged construction is required. For the example geometry, XSTABL was used to assess short-term (undrained) stability using C_{uu} = 160 psf (see Figures 9-4 and 9-5 for the specific strength envelopes used). Figure 9-A-2 provides the results of the stability analysis, and indicates that the factor of safety is well below the minimum long-term value of 1.25 required for an embankment without a structure. Therefore, staged construction or some other form or mitigation is required to construct the embankment. For this example, continue with a staged construction approach.

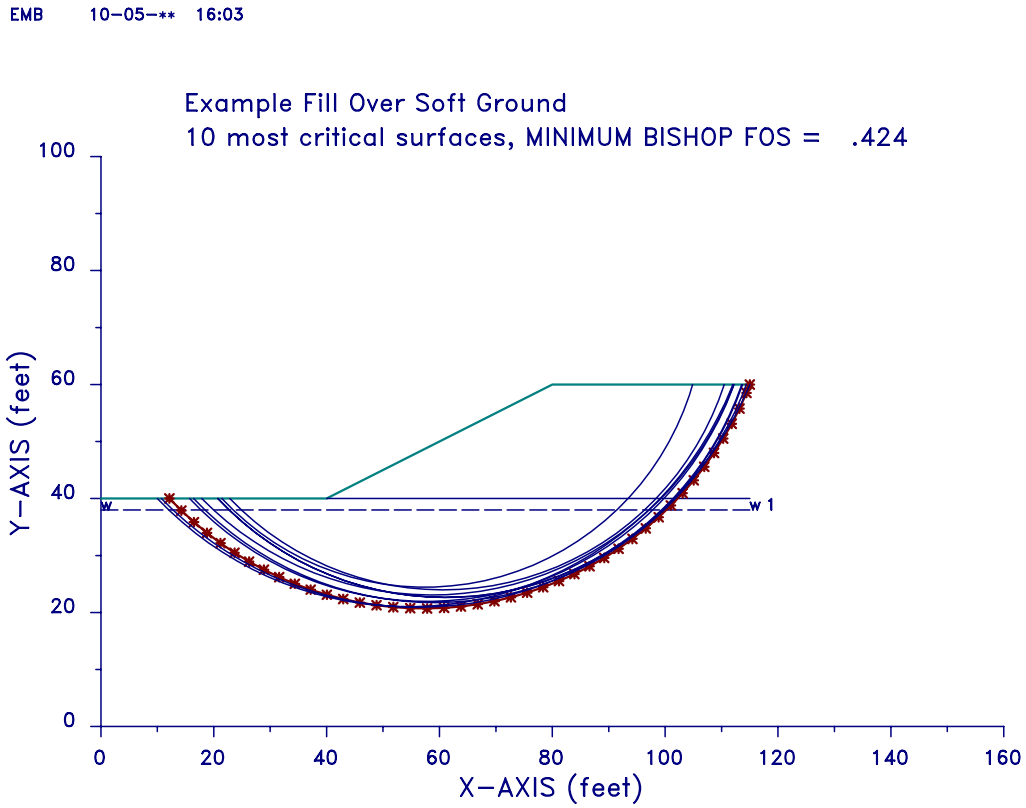

Undrained Stability for the Example Geometry
Figure 9-A-2

9-A.2 Determination of Maximum Stable First Stage Fill Height

The analysis conducted in the previous section is conducted again, but this time limiting the fill height to that which has a factor of safety that is equal to or greater than the minimum acceptable interim value (use FS = 1.15 to 1.2 minimum for this example). As shown in Figure 9-A-3, the maximum initial fill height is 6 feet. This initial fill height is used as a starting point for both the total stress and the effective stress analyses.

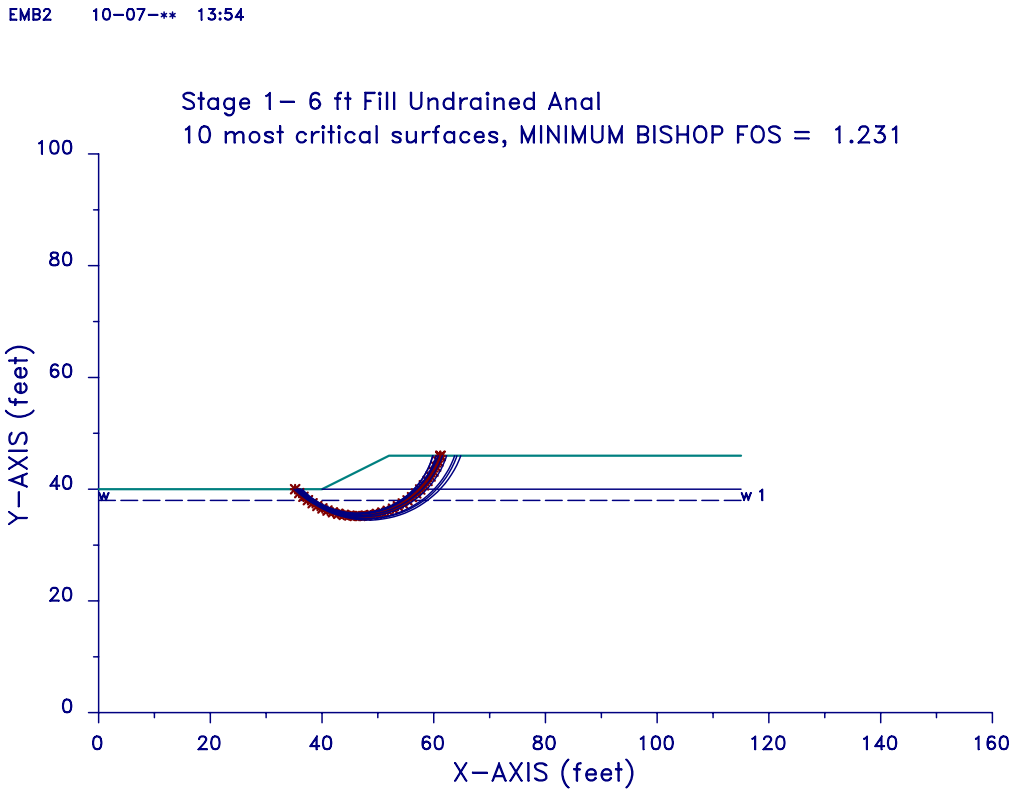

Stage 1 Fill Stability, Assuming no Strength Gain and a Fill Height of 6 Feet
Figure 9-A-3

9-A.3 Total Stress Analysis Procedure Example

In this approach, the undrained soil strength envelope, or φ_{consol}, as determined in Figure 9-5, is used to characterize the strength of the subsoil. Next, the geotechnical designer determines how much strength gain can be obtained by allowing the first stage of fill to consolidate the underlying soft soils, using total stresses and undrained strengths after consolidation (see Section 9.3.1.3). The geotechnical designer calculates the stress increase resulting from the placement of the first embankment stage using the Boussinesq equation or those of Westergaard (see Figures 9-2 and 9-3). Note that because the stress increase due to the embankment load decreases with depth, the strength gain also decreases with depth. To properly account for this, the soft subsoil should be broken up into layers and zones for analysis just as is done for calculating settlement. For the example, the subsurface is divided into the layers and zones shown in Figure 9-A-4 to account for the differences in stress increase due to the embankment. The geotechnical designer will have to utilize judgment in determining

the optimum number of layers and zones to use. If the division of zones is too coarse, the method may not properly model the field conditions during construction, and too fine of a division will result in excessive computational effort.

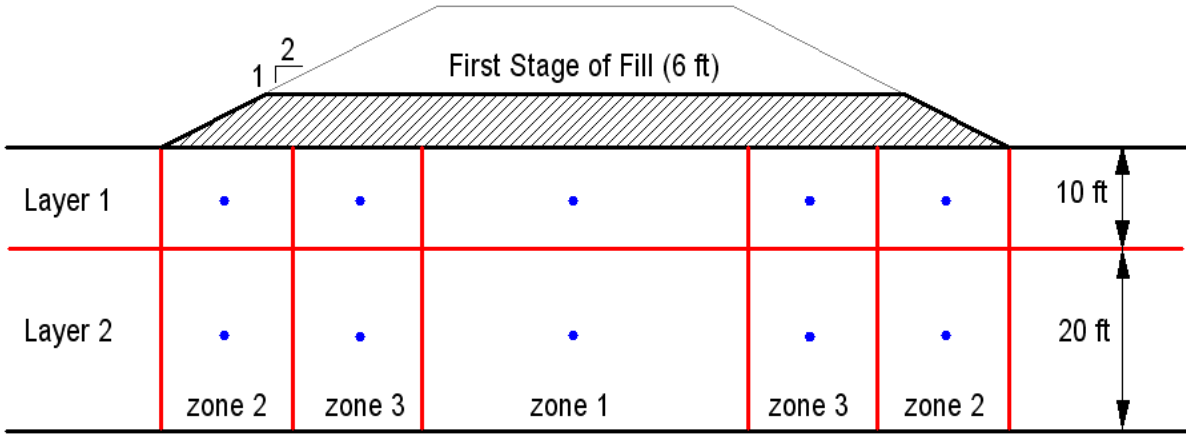

Division of Subsurface for Estimating Strength Increase and Consolidation
Figure 9-A-4

For the example geometry model the embankment as a continuous strip with a width of 103 feet (B = 35' + (4x20) – (2x6)). As zone 3 is located close to the center of the embankment the stress change in that zone will be close to that near the center of the embankment for the stage 1 loading. Therefore, zone 3 is not used in the analysis example yet. It will be used later in the example. The stress increases in the zones are as follows:

Zone	Layer	Z	Z/B	I	σ_v 6 feet × 130 pcf	$\Delta\sigma_v$ (I × σ_v)
1	1	5 feet	0.049	0.98	780 psf	764 psf
	2	20 feet	0.190	0.93	780 psf	725 psf
2	1	5 feet	0.049	0.55	780 psf	429 psf
	2	20 feet	0.190	0.75	780 psf	585 psf

Once the geotechnical designer has the stress increase, the increase in strength due to consolidation can be estimated using Equations 9-6 and 9-7. However, the strength increase achieved will depend on the degree of consolidation that occurs. The consolidation is dependant upon the time (t), drainage path length (H), coefficient of consolidation (C_v), and the Time Factor (T). Using Equations 9-8 through 9-10, assuming the stage 1 fill is allowed to consolidate for 15 days and assuming the soft soil layer is doubly drained, the percent consolidation would be:

$T = tC_v/H^2$
$T = 15 \text{ days}(1 \text{ feet}^2/\text{Day})/(30 \text{ feet}/2)^2$ (assumed double draining)
$T = 0.067 = 0.25\pi U^2$; for $U < 60\%$
$U = 0.292$ or 29%

Therefore, at 15 days and 29% consolidation, using Equation 9-7, the strength gain would be as follows:

Zone	Layer	$\Delta\sigma_v$ ($I \times \sigma_v$)	C_{uui}	U	φ_{consol}	$C_{uu\ 29\%}$
1	1	764 psf	160 psf	0.29	22°	250 psf
	2	725 psf	160 psf	0.29	22°	245 psf
2	1	429 psf	160 psf	0.29	22°	210 psf
	2	585 psf	160 psf	0.29	22°	228 psf

Using the same procedure the strength gain at other time periods can be estimated. For example, at 60 days the percent consolidation would be 59%, and the strength gain would be as follows:

Zone	Layer	$\Delta\sigma_v$ ($I \times \sigma_v$)	Cuu_i	U	φ_{consol}	$C_{uu\ 59\%}$
1	1	764 psf	160 psf	0.59	22°	342 psf
	2	725 psf	160 psf	0.59	22°	333 psf
2	1	429 psf	160 psf	0.59	22°	262 psf
	2	585 psf	160 psf	0.59	22°	299 psf

The geotechnical designer should consider that as consolidation time increases the relative increase in strength becomes less as time continues to increase. Having a settlement delay period that would achieve 100% consolidation is probably not practical due to the excessive duration required. Delay period of more than 2 months are generally not practical. Continue the example assuming a 15 day settlement delay period will be required. Using the strength gained, the geotechnical designer determines how much additional fill can be placed.

Determine the height of the second stage fill that can be constructed by using $C_{uu\ 29\%}$ and increasing the fill height until the factor of safety is approximately 1.2 but not less than 1.15. As shown in Figure 9-A-5, the total fill height can be increased to 8 feet (2 feet of new fill is added) after the 15 day delay period.

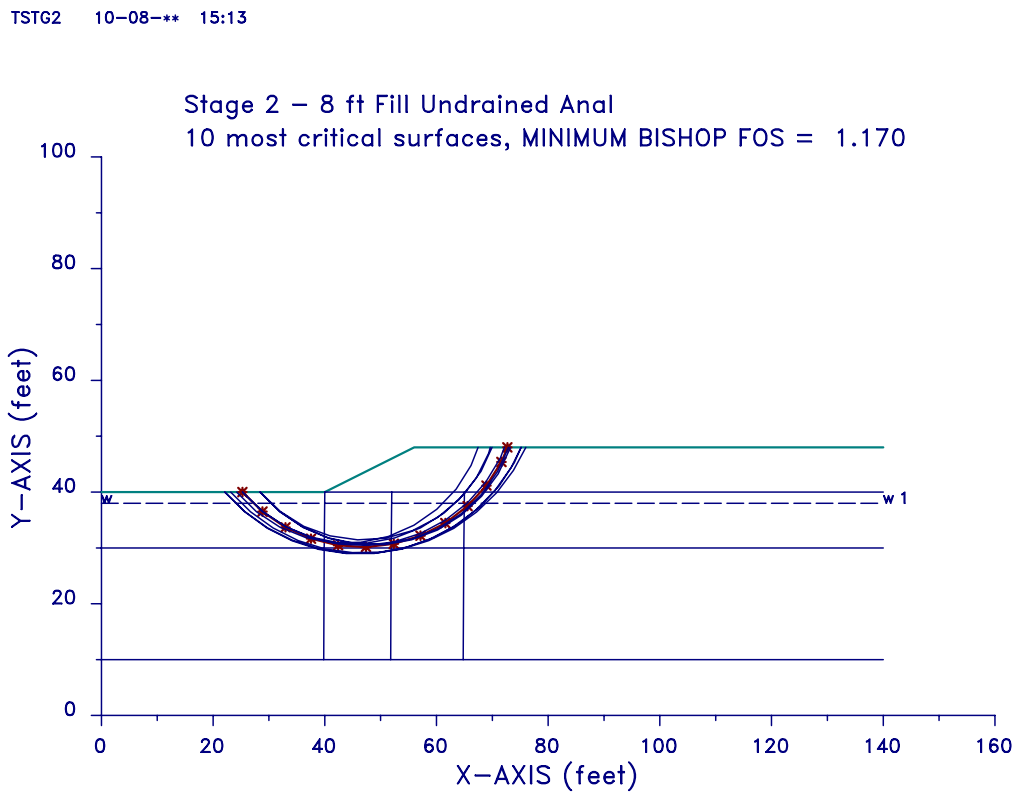

Stage 2 Undrained Analysis, Assuming 15 Day Delay Period After Atage 1, and a Total Fill Height of 8 Feet
Figure 9-A-5

For the second stage of fill, the effective footing width changes as the fill becomes thicker. The equivalent footing width for use with the Boussinesq stress distribution will be 99 feet (B = 35' + (4 × 20) – (2 × 8)). As zone 3 is located close to the center of the embankment the stress change in that zone will be close to that near the center of the embankment for the stage 1 and stage 2 loading. Therefore, zone 3 is not used in the analysis example yet. It will be used later in the example. The stress increases in the zones are as follows:

Zone	Layer	Z	Z/B	I	σ_v 8 feet × 130 pcf	$\Delta\sigma_v$ (I × σ_v)
1	1	5 feet	0.049	0.98	1040 psf	1019 psf
	2	20 feet	0.190	0.93	1040 psf	967 psf
2	1	5 feet	0.049	0.55	1040 psf	231 psf
	2	20 feet	0.190	0.75	1040 psf	315 psf

Once the geotechnical designer has the stress increase, the increase in strength due to consolidation can be estimated. The geotechnical designer must now begin to use weighted averaging to account for the difference in consolidation times (see Figure 9-6). The first stage of fill was allowed to settle for 15 days prior to placing the additional 2 feet of fill in the second stage, bringing the total fill height up to 8 feet. If the second lift of soil is allowed to consolidate for another 15 days, the soil will actually have been consolidating for 30 days total. For 30 days, the Time Factor (T). would be:

$T = tC_v/H^2$
$T = 30 \text{ days}(1 \text{ feet}^2/\text{Day})/(30 \text{ feet}/2)^2$ (assumed double draining)
$T = 0.133 = 0.25\pi U^2$; for $U < 60\%$
So, $U = 0.41$ or 41%

The average consolidation of the 15 + 15 day delay period will be:

[6 feet(0.41) + 2 feet(0.29)]/8 feet = 0.38 or 38%

The strength gain at 30 days and 38% average consolidation would be as follows:

Zone	Layer	$\Delta\sigma_v$ ($I \times \sigma_v$)	C_{uui}	U	φ_{consol}	$C_{uu\ 38\%}$
1	1	764 psf	160 psf	0.38	22°	317 psf
	2	725 psf	160 psf	0.38	22°	309 psf
2	1	429 psf	160 psf	0.38	22°	248 psf
	2	585 psf	160 psf	0.38	22°	280 psf

The geotechnical designer would continue this iterative process of adding fill, determining the weighted average consolidation, subsequent strength gain, and stability analysis to determine the next "safe" lift until the embankment is constructed full height.

Once the final stage fill is placed, it will continue to cause consolidation of the soft subsoil, increasing its strength. The calculations to determine the time required once the embankment is completed to cause the factor of safety to increase to the minimum long-term acceptable FS of 1.25 are summarized as follows:

Zone	Layer	$\Delta\sigma_v$ ($I \times \sigma_v$)	C_{uui}	U	φ_{consol}	$C_{uu\ 38\%}$
1	1	2509 psf	160 psf	0.71	22°	880 psf
	2	780 psf	160 psf	0.71	22°	384 psf
2	1	2314 psf	160 psf	0.71	22°	824 psf
	2	962 psf	160 psf	0.71	22°	436 psf
3	1	1430 psf	160psf	0.71	22°	570 psf
	2	1560 psf	160 psf	0.71	22°	608 psf

The calculations tabulated above assume that 25 days after the final fill layer is has elapsed, resulting in an average degree of consolidation of 71%.

The final stability analysis, using the undrained shear strengths tabulated above, is as shown in Figure 9-A-6.

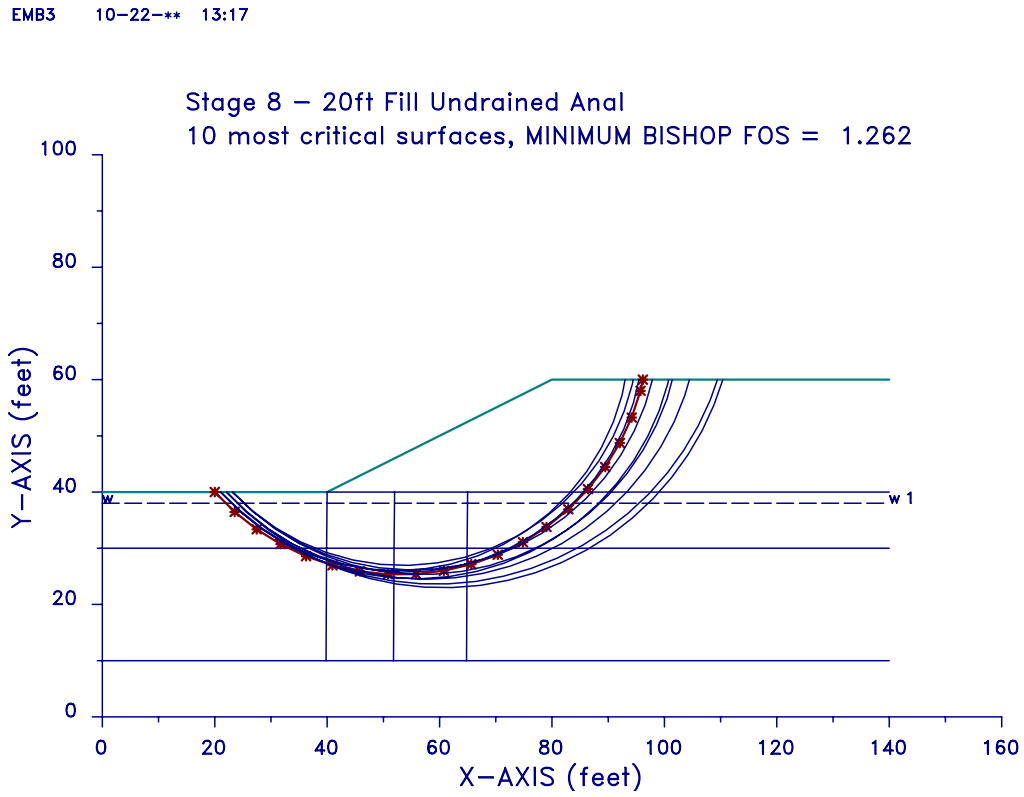

Final Stage Undrained Analysis, Assuming 25 Days Have Expired Since Last Fill Increment Was Placed, and a Total Fill Height of 20 Feet
Figure 9-A-6

In summary, the fill increments and delay periods are as follows:

Stage	Fill Increment	Time Delay Prior to Next Stage
1	6 feet	15 days
2	2 feet	15 days
3	2 feet	15 days
4	2 feet	15 days
5	2 feet	30 days
6	2 feet	30 days
7	3 feet	10 days
8	1 feet	25 days to obtain FS = 1.25
TOTALS	20 feet	155 days

Fewer stages can be selected by the geotechnical designer, but longer delay periods are required to achieve more consolidation and the higher strength increases necessary to maintain stability. A comparable analysis using thicker fill stages and longer settlement delay periods yielded the following:

Stage	Fill Increment	Time Delay Prior to Next Stage
1	6 feet	60 days
2	4.5 feet	60 days
3	5.5 feet	40 days
4	4 feet	5 days to obtain FS = 1.25
TOTALS	20 feet	165 days

When using the total stress method of analysis it is often best to maximize the initial fill height. Doing this will produce the greatest amount of soil strength gain early in the construction of the fill. In addition, keeping the subsequent stages of fill as small as possible enables the fill to be constructed with the shortest total delay period, though in the end, the time required to achieve the final long-term safety factor is approximately the same for either approach.

9-A.4 Effective Stress Analysis Procedure Example

In this approach, the drained soil strength, or ϕ_{CD}, is used to characterize the strength of the subsoil. From Figure 9-5, ϕ_{CD} is 27°. However, it is the buildup of pore pressure during embankment placement that causes the embankment to become unstable. The amount of pore pressure buildup is dependent on how rapidly the embankment load is placed. Given enough time, the pore pressure buildup will dissipate and the soil will regain its effective strength, depending on the permeability and compressibility of the soil. The key to this approach is to determine the amount of pore pressure build up that can be tolerated before the embankment safety factor drops to a critical level when using ϕ_{CD} for the soil strength. A limit equilibrium stability program such as XSTABL should be used to determine the pore pressure increase that can be tolerated and result in the embankment having a safety factor of 1.15 to 1.2 during construction.

Many of the newer stability programs have the ability to accept r_u values directly or to calculate r_u. The geotechnical designer should be aware of how the stability program calculates r_u. When using XSTABL, the geotechnical designer should not input r_u directly. Instead, he should input excess pore pressures directly into the program and then run the stability analysis.

The rate of fill construction required to prevent r_u from being exceeded cannot be determined directly from the drained analysis, as embankment stability needs in addition to the subsoil consolidation rate affects the rate of construction. The total construction time cannot therefore be determined directly using C_v and the percent consolidation required for stability.

Using the example geometry shown in Figure 9-A-1, the geotechnical designer should divide the subsurface into layers and zones in a manner similar to that shown in Figure 9-A-4. The geotechnical designer then determines the stress increase due to the first stage of fill, 6 feet in this case.

The stress increases in the zones are as follows based on an equivalent strip footing width of 103 feet:

Zone	Layer	Z	Z/B	I	σ_v 6 feet × 130 pcf	$\Delta\sigma_v$ (I × σ_v)
1	1	5 feet	0.049	0.98	780 psf	764 psf
	2	20 feet	0.190	0.93	780 psf	725 psf
2	1	5 feet	0.049	0.55	780 psf	429 psf
	2	20 feet	0.190	0.75	780 psf	585 psf
3	1	5 feet	0.049	0.98	780 psf	764 psf
	2	20 feet	0.019	0.93	780 psf	725 psf

Note that Zone 3 has the same stress increase as Zone 1.

As discussed previously in Section 9.3.1.4, the pore pressure increase is dependent upon the load and the degree of consolidation. Using Equation 9-15 with an assumed percent consolidation, determine the pore pressure change to use in the stability analysis. It will be necessary to perform the analysis for several percent consolidations to determine what the critical pore pressure is for maintaining stability.

$K_0 = 1 - \sin \varphi_{CD} = 1 - \sin 27° = 0.55$

B = 1.0, assuming subsoil is fully saturated. For Layer 1, Zone 1, at 30% consolidation,

$\Delta u_p = B[(1 + 2K_0)/3]\Delta\sigma v(1-U) = 1.0[(1 + 2(0.55))/3](764 \text{ psf})(1-.30) = 374 \text{ psf}$

The remaining values are as follows:

Layer	Zone	$\Delta\sigma_v$ ($I \times \sigma_v$) (psf)	U (%)	$\Delta u_{p30\%}$ (psf)	U (%)	$\Delta u_{p35\%}$ (psf)	U (%)	$\Delta u_{p40\%}$ (psf)
1	1	764	30	374	35	346	40	320
	2	725	30	354	35	329	40	303
2	1	429	30	209	35	194	40	179
	2	585	30	286	35	265	40	245
3	1	764	30	373	35	346	40	320
	2	725	30	354	35	329	40	303

The slope stability results from XSTABL are provided in Figure 9-A-7. For the two subsoil layers, all zones, a drained friction angle, ϕ_{CD}, of 27° was used, and the pore pressure increases Δu_p from the tabulated summary of the calculations provided above were inserted into the soil zones shown in Figure 9-A-7 as pore pressure constants. The results shown in this figure are for a percent consolidation of 35%.

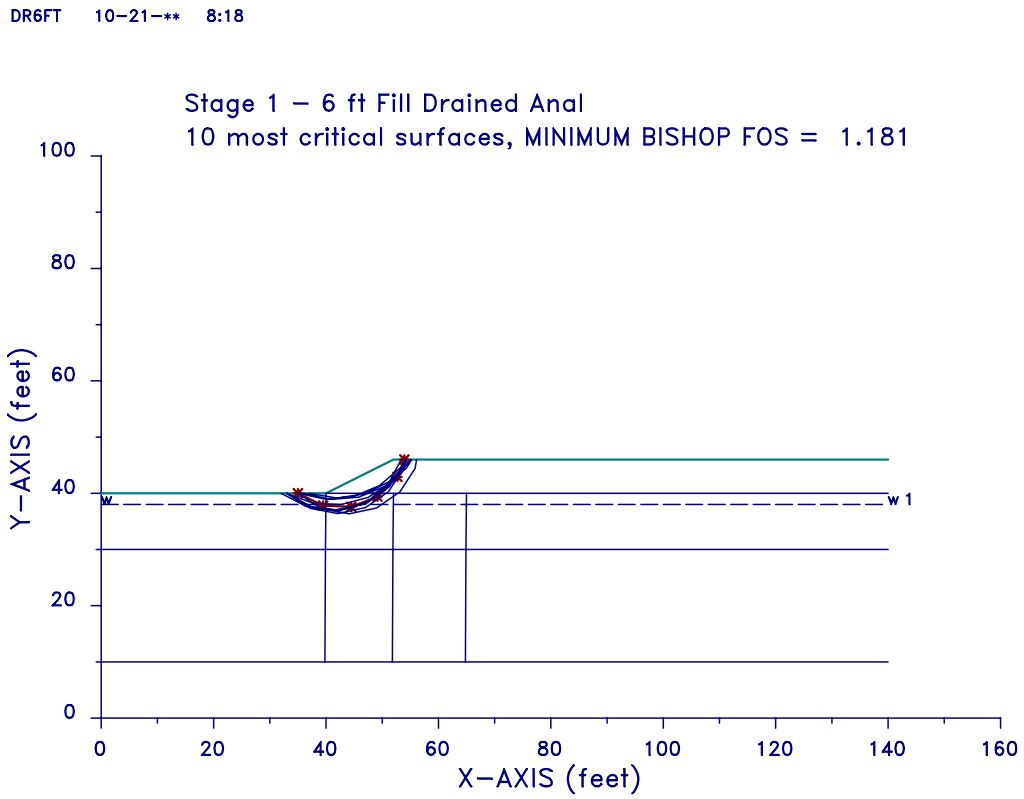

Stage 1 Drained Analysis at Percent Consolidation of 35% and a Fill Height of 6 Feet
Figure 9-A-7

Using Equation 9-16, r_u at this stage of the fill construction is determined as follows:

$$r_u = B[(1 + 2K_0)/3](1-U) = 1.0[(1 + 2(0.55))/3](1-0.35) = 0.45$$

Subsequent stages of fill construction are checked to determine the critical pore pressure ratio, up to the point where the fill is completed. The pore pressure ratio is evaluated at several fill heights, but not as many stages need to be analyzed as is the case for total stress analysis, as the rate of fill construction is not the focus of the drained analysis. All that needs to be achieved here is to adequately define the relationship between r_u and the fill height. Therefore, one intermediate fill height (13.5 feet) and the maximum fill height (20 feet) will be checked.

For a fill height of 13.5 feet, the stress increases in the zones are as follows based on an equivalent strip footing width of 88 feet:

Zone	Layer	Z	Z/B	I	σ_v 13 feet × 130 pcf	$\Delta\sigma_v$ (I × σ_v)
1	1	5 feet	0.049	0.97	1,690 psf	1,700 psf
	2	20 feet	0.190	0.90	1,690 psf	1,580 psf
2	1	5 feet	0.049	0.40	1,690 psf	702 psf
	2	20 feet	0.190	0.55	1,690 psf	965 psf
3	1	5 feet	0.049	0.75	1,690 psf	1,320 psf
	2	20 feet	0.019	0.70	1,690 psf	1,230 psf

Note that the stress increase in Zone 3 is now different than the stress increase in Zone 1, due to the fact that the embankment slope now is over the top of Zone 3.

The pore pressure increase resulting from a 13.5 feet high fill, assuming various percent consolidations, is recalculated using Equation 9-15 as illustrated earlier. The results of these calculations are as tabulated below:

Zone	Layer	$\Delta\sigma_v$ ($I \times \sigma_v$) (psf)	U (%)	$\Delta u_{p55\%}$ (psf)	U (%)	$\Delta u_{p60\%}$ (psf)	U (%)	$\Delta u_{p65\%}$ (psf)
1	1	1702	55	534	60	475	65	415
	2	1580	55	496	60	441	65	386
2	1	702	55	220	60	196	65	171
	2	695	55	218	60	194	65	170
3	1	1316	55	413	60	367	65	321
	2	1229	55	386	60	343	65	300

Note that higher percent consolidations are targeted, as a higher percent consolidation is likely to have occurred by the time the fill is 13.5 feet high. The slope stability results from XSTABL are provided in Figure 9-A-8. For the two subsoil layers, all zones, a drained friction angle, φ_{CD}, of 27° was used, and the pore pressure increases Δu_p from the tabulated summary of the calculations provided above were inserted into the soil zones shown in Figure 9-A-8 as pore pressure constants. The results shown in this figure are for a percent consolidation of 60%.

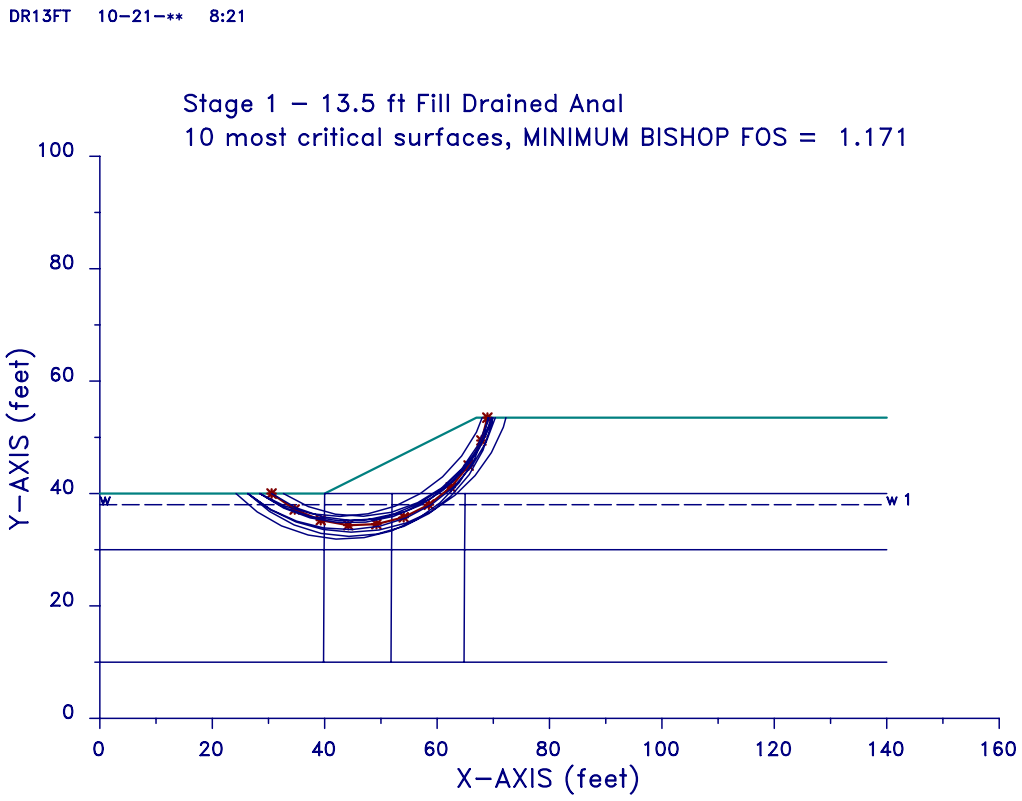

Stage 2 Drained Analysis at Percent Consolidation of 60% and a Fill Height of 13.5 Feet
Figure 9-A-8

Using Equation 9-16, r_u at this stage of the fill construction is determined as follows:

$$r_u = B[(1 + 2K_0)/3](1-U) = 1.0[(1 + 2(0.55))/3](1-0.60) = 0.28$$

Similarly, these calculations were conducted for the full fill height of 20 feet, and for a minimum FS = 1.15 to 1.2, r_u was determined to be 0.22 (U = 68%).

In summary, the pore pressure ratios that should not be exceeded during fill construction are as follows:

Total Fill Height (ft)	r_u
6	0.45
13.5	0.28
20	0.22

Values of r_u could be interpolated to estimate the critical r_u at other fill heights. It should be assumed that if these values of r_u are used to control the rate of fill construction, the time required to build the fill will be approximately as determined from the total stress analysis provided in the previous section.

Chapter 10 Soil Cut Design

10.1 Overview and Data Acquisition

10.1.1 Overview

During the project definition phase, the project designer provides a description of the proposed cuts to the Region Materials Engineer (RME) as outlined in the *Design Manual* M 22-01 Chapter 510. The designer may prepare preliminary cross sections using the criteria presented in *Design Manual* M 22-01 Section 640.07. For side hill conditions the cross sections should extend up to the top of the hill or a controlling feature such as a rock outcrop or level bench. The RME with assistance from the HQ Geotechnical Division as needed, reviews existing information, performs a site reconnaissance and provides conceptual recommendations.

During the project design phase the subsurface investigation is completed and the cut slope design recommendations are prepared. Included in the recommendations are the slope inclinations required for stability, mitigation requirements if needed and the usability of excavated cut material. Typically for cut slope design, adequate geotechnical information is provided during the project design phase to complete the PS&E Development. Additional geotechnical work might be needed when right of way cannot be obtained or design requirements change.

10.1.2 Site Reconnaissance

General procedures for site reconnaissance are presented in Chapter 2. Special considerations for cut slopes should be made during the office and site review. The office review of aerial photos from different dates may reveal if there has been any change in slope angle or vegetation over time. Landforms identified on the photos should be field checked to determine if they can be related to geologic processes and soil type.

The existing natural and cut slopes in the project vicinity should be inspected for performance. Measure the inclination and height of existing cut slopes, and look for erosion or slope stability problems. Ask the regional maintenance engineer about any stability/erosion problems with the existing cut slopes. In general, if stable slopes will be cut back into an existing slope 10 feet or less and at the same or flatter angle of inclination, the slope height does not increase significantly because of the cut, there is no evidence of instability, there is no evidence the material type is likely to be different at the excavation face, and there is no potential for seepage to be encountered in the cut, then typically no further exploration will be required.

Observation of existing slopes should include vegetation, in particular the types of vegetation that may indicate wet soil. Indirect relationships, such as subsurface drainage characteristics may be indicated by vegetative pattern. Assess whether tree roots may be providing anchoring of the soil and if there are any existing trees near the top of the proposed cut that may become a hazard after the cut is completed.

Changes in ground surface slope angle may reflect differences in physical characteristics of soil and rock materials or the presence of water.

For cuts that are projected to be less than 10 feet in height, determine if further exploration is warranted based on soil type and extent.

10.1.3 Field Exploration

10.1.3.1 Test Borings

A minimum of one boring should be performed for each proposed soil cut slope greater than about 10 feet in height. For longer cuts, horizontal spacing for borings parallel to the cut should generally be between 200 to 400 feet, based on site geology. Wider spacing may be considered if, based on existing data and site geology, conditions are likely to be uniform and of low impact to construction and long-term cut slope performance. Each landform should be explored, and the borings should be spaced so that the extent of each soil type present is reasonably determined. At critical locations where slope stability analysis is necessary, additional borings perpendicular to the cut should be provided in order to model existing geologic conditions for use in slope stability analysis. The exploration program should also be developed with consideration to the potential for use of the removed material as a source for fill material elsewhere on the project. If the construction contract is set up with the assumption that the cut material can be used as a materials source for fill or other uses on the project, it is important to have adequate subsurface information to assess how much of the cut material is useable for that purpose. A key to the establishment of exploration frequency for embankments is the potential for the subsurface conditions to impact the construction of the cut, the construction contract in general, and the long-term performance of the finished project. The exploration program should be developed and conducted in a manner that these potential problems, in terms of cost, time, and performance, are reduced to an acceptable level. The boring frequency described above may need to be adjusted by the geotechnical designer to address the risk of such problems for the specific project.

Borings should extend a minimum of 15 feet below the anticipated depth of the cut at the ditch line to allow for possible downward grade revision and to provide adequate information for slope stability analysis. Boring depths should be increased at locations where base stability is a concern due to groundwater and/or soft or weak soil zones. Borings should extend through any weak zones into competent material.

Hand augers, test pits, trenches or other similar means of exploration may be used for investigating subsurface conditions for sliver cuts (additional cut in an existing natural or cut slope) or shallow cuts, if the soil conditions are known to be fairly uniform.

10.1.3.2 Sampling

For soil cuts, it is important to obtain soil samples in order to perform laboratory index tests such as grain size analysis, natural moisture content and Atterberg limits. This is generally the best way to define site stratigraphy. In situ testing can be used to augment the exploration program. However, information obtained from site specific samples is necessary to verify and place in proper context soil classification, strength and compressibility parameters obtained from in situ tests. Sampling should be performed for the purpose of cut stability assessment and assessment of the cut material as a materials source, if the cut material is needed as a materials source. Special considerations for loess slopes are discussed later in this chapter.

For granular soils, SPT samples at 5 feet intervals and at changes in strata are generally sufficient. A combination of SPTs and undisturbed thin-wall push tube (i.e. WSDOT undisturbed or Shelby tube) should be used in cohesive soil. The vane shear test (VST) may also be performed in very soft to soft cohesive soil. In general, the VST should be used in conjunction with laboratory triaxial testing unless there is previous experience with the VST at the site. The pressuremeter test (PMT) and dilatometer test (DMT) are expensive and generally have limited applicability for cut slope design, but are useful for determining shear strength and overconsolidation ratio in stiff to hard cohesive soil.

Because it is generally desirable to obtain samples for laboratory testing, the static cone penetration test (CPT) is not often used for routine exploration of cut slopes. However, the CPT provides continuous data on the stratigraphic profile and can be used to evaluate in situ strength parameters in very soft to medium stiff cohesive soil and very loose to medium dense sands.

10.1.3.3 Groundwater Measurement

Knowledge of groundwater elevations is critical for the design of cut slopes. The presence of groundwater within or just below a proposed cut will affect the slope angle required to achieve and maintain stability. For example, the presence of groundwater near the base of a proposed cut slope in loess will preclude making a near vertical slope. Substantially more right-of-way may be required to construct a flatter slope. Measurement of groundwater and estimates of its fluctuations are also important for the design of appropriate drainage facilities. Groundwater that daylights within a proposed cut slope may require installation of horizontal drains (generally for coarser grained cohesionless soils) or other types of drainage facilities. Groundwater near the toe of slopes may require installation of underdrains. Groundwater measurements are also important if slope stability analysis is required.

In granular soil with medium to high permeability, reliable groundwater levels can sometimes be obtained during the drilling program. At a minimum, groundwater levels should be obtained at completion of drilling after the water level has stabilized and 12 hours after drilling is completed for holes located in medium to high permeability soils. In low permeability soils false water levels can be recorded, as it often takes days for water levels to reach equilibrium; the water level is further obscured when drilling fluid is used. In this case piezometers should be installed to obtain water levels after equilibrium has been reached. Piezometers should be installed for any major cuts, or as determined by the geotechnical designer, to obtain accurate water level information.

If slope stability analysis is required or if water levels might be present near the face of a cut slope, piezometers should be installed in order to monitor seasonal fluctuations in water levels. Monitoring of piezometers should extend through at least one wet season (typically November through April). Continuous monitoring can be achieved by using electrical piezometers such as vibrating wire type in conjunction with digital data loggers.

Values of permeability and infiltration rates are generally determined based on correlations with grain size and/or knowledge of the site soil based on previous experience. However, borehole permeability tests, such as slug or pump tests, may be performed in order to design drainage facilities, especially if horizontal drains may be used.

10.1.4 Laboratory Testing

Standard classification tests should be performed on representative samples for all soil cut slopes. These tests include gradation analysis, moisture content, and Atterberg limits. These tests will provide information to aid in determining appropriate slope inclinations, drainage design, and usability of the cut material as a materials source for earthwork on the project. Additional tests will often be required to determine the suitability of reusing soil excavated from a cut for other purposes throughout the project. Examples include organic content to determine if a soil should be classified as unsuitable and compaction testing to aid in determining the optimum moisture content and shrink/swell factors for earthwork calculations. pH and corrosivity tests should also be performed on samples at locations for proposed drainage structures.

If it is determined by the geotechnical designer that slope stability analysis should be performed, laboratory strength testing on undisturbed samples may be required. Slope stability analysis requires accurate information of soil stratigraphy and strength parameters, including cohesion (c'), friction angle (ϕ'), undrained shear strength (S_u), and unit weight for each layer. In-place density measurements can be determined from WSDOT undisturbed, Dames and Moore, or Shelby tube samples.

Cohesive soil shear strength parameters should be obtained from undisturbed soil samples using consolidated undrained triaxial tests with pore pressure measurement if portions of the proposed slope are saturated or might become saturated in the future. Effective strength parameters from these tests should be used to analyze cohesive soil cut slopes and evaluate long term effects of soil rebound upon unloading. Unconsolidated undrained (UU) triaxial tests or direct shear tests can be used to obtain undrained shear strength parameters for short term stability analysis, or when it is determined by the geotechnical designer that total stress/strength parameters are sufficient. The choice of which test to perform should be determined by the expected stress condition in the soil in relation to the anticipated failure surface. It should be understood, however, that strength parameters obtained from unsaturated tests are dependent on the moisture content at which the tests are performed. If the moisture content of the soil in question increases in the future, even to levels still below saturation, the shear strength might be significantly reduced, especially for cohesive soils. Ring shear tests can be performed to determine residual shear strength parameters for soils located in existing landslide areas. Repeated direct shear tests have been used in the past to obtain residual strength parameters, but research has shown that this approach tends to over-estimate the residual strength, unless a slickensided surface in the specimen can be oriented such that the direct shear test fails the specimen on that pre-existing surface (Sabatini, et al., 2002). Residual strength parameters should also be obtained for cuts in heavily overconsolidated clays, such as the Seattle clays (e.g., Lawton formation), as the removal of soil can release locked in stresses and allow the clay to deform, causing its strength to drop to a residual value.

It should be noted that for unsaturated soils, particularly cohesive soils, the natural moisture content of the soil at the time of testing must be determined since this will affect the results. Consideration should be given during stability analysis to adjusting strength parameters to account for future changes in moisture content, particularly if field testing was performed during the dry summer months and it is possible that the moisture content of the soil will likely increase at some point in the future. In this case using the values obtained from the field directly may lead to unconservative estimates of shear strength.

10.2 Overall Design Considerations

10.2.1 Overview

Small cut slopes are generally designed based on past experience with similar soils and on engineering judgment. Cut slopes greater than 10 feet in height usually require a more detailed geotechnical analysis. Relatively flat (2H:1V or flatter) cuts in granular soil when groundwater is not present above the ditch line, will probably not require rigorous analysis. Any cut slope where failure would result in large rehabilitation costs or threaten public safety should obviously be designed using more rigorous techniques. Situations that will warrant more in-depth analysis include large cuts, cuts with irregular geometry, cuts with varying stratigraphy (especially if weak zones are present), cuts where high groundwater or seepage forces are likely, cuts involving soils with questionable strength, or cuts in old landslides or in formations known to be susceptible to landsliding.

A major cause of cut slope failures is related to the release of stress within the soil upon excavation. This includes undermining the toe of the slope and oversteepening the slope angle, or as mentioned previously, cutting into heavily overconsolidated clays. Careful consideration should be given to preventing these situations for cut slopes by keeping the base of the slope as loaded as possible, by choosing an appropriate slope angle (i.e. not oversteepening), and by keeping drainage ditches near the toe a reasonable distance away. For heavily overconsolidated clays, retaining walls rather than an open cut may be needed that will prevent the deformation necessary to allow the soil strength to go to a residual value.

Consideration should also be given to establishing vegetation on the slope to prevent long-term erosion. It may be difficult to establish vegetation on slopes with inclinations greater than 2H:1V without the use of erosion mats or other stabilization method.

10.2.2 Design Parameters

The major parameters in relation to design of cut slopes are the slope angle and height of the cut. For dry cohesionless soil, stability of a cut slope is independent of height and therefore slope angle becomes the only parameter of concern. For purely cohesive ($\phi = 0$) soils, the height of the cut becomes the critical design parameter. For c'-ϕ' and saturated soils, slope stability is dependent on both slope angle and height of cut. Also critical to the proper design of cut slopes is the incorporation of adequate drainage facilities to ensure that future stability or erosional problems do not occur.

10.3 Soil Cut Design

10.3.1 Design Approach and Methodology

Safe design of cut slopes is based either on past experience or on more in-depth analysis. Both approaches require accurate information regarding geologic conditions obtained from standard field and laboratory classification procedures. Cut slope heights and inclinations provided in the *Design Manual* M 22-01 can be used unless indicated otherwise by the Geotechnical Designer. If the Geotechnical Designer determines that a slope stability study is necessary, information that will be needed for analysis include: an accurate cross section showing topography, proposed grade, soil unit profiles, unit weight and strength parameters (c', ϕ'), (c, ϕ), or S_u (depending on soil type and drainage and loading conditions) for each soil unit, and location of the water table and flow characteristics.

Generally, the design factor of safety for static slope stability is 1.25. For pseudo-static seismic analysis the factor of safety can be decreased to 1.1. Cut slopes are generally not designed for seismic conditions unless slope failure could impact adjacent structures. These factors of safety should be considered as minimum values. The geotechnical designer should decide on a case by case basis whether or not higher factors of safety should be used based the consequences of failure, past experience with similar soils, and uncertainties in analysis related to site and laboratory investigation.

Initial slope stability analysis can be performed using simple stability charts. See Abramson et al. (1996) for example charts. These charts can be used to determine if a proposed cut slope might be subject to slope failure. If slope instability appears possible, or if complex conditions exist beyond the scope of the charts, more rigorous computer methods such XSTABL, PCSTABL, SLOPE/W, etc. can be employed (see Chapter 7). As stated previously, effective use of these programs requires accurate determination of site geometry including surface profiles, soil unit boundaries, and location of the water table, as well as unit weight and strength parameters for each soil type.

Because of the geology of Washington, many soil cuts will likely be in one of five typical types of deposits. These soils can be grouped based on geologic history and engineering properties into residual soil, alluvial sand and gravel, glacially overconsolidated soil, colluvial deposits, and loess deposits. A design procedure has been developed for loess slopes and is presented later in this chapter. A brief discussion of the other three soil types follows:

Residual Soil – The most typical residual soil is encountered in the Coast Range in the southwest part of the state. Other residual soil units weathered from rock formations such as the Renton, Cowlitz, Ellensburg and Ringold are also encountered in other parts of the state. However, the soil in the coast range is the most extensive residual soil found in the state and is the focus of this discussion. These soils have formed from weathering of siltstone, sandstone, claystone and tuff, and typically consist of soft to stiff silt, elastic silt and lean clay with varying amounts of rock fragments, sand and fat clay. Because of the cohesive nature of the soil and the angular rock fragments, the soils often form fairly steep natural slopes. Root strength from dense vegetation also contributes to the steep slopes. Logging

a slope can often cause it to become unstable within a few years. These slopes are likely to become at least partially saturated during the winter and spring months. Groundwater also tends to move unevenly through the soil mass following zones of higher permeability such as sand layers and relict bedding and joint planes. For this reason, determination of representative groundwater elevations with the use of open standpipe piezometers may be difficult.

These slopes should generally be designed using total stress parameters to assess short-term strength during initial loading, and also using effective stress parameters to assess long-term stability; however, laboratory testing in these soils can be problematic because of variability and the presence of rock fragments. Shallow surface failures and weak zones are common. Typical design slopes should generally be 2H:1V or flatter. Vegetation should be established on cut slopes as soon as possible.

Alluvial Sand and Gravel Deposits – Normally consolidated sand and gravel deposits in Washington are the result of several different geologic processes. Post glacial alluvial deposits are located along existing rivers and streams and generally consist of loose to medium dense combinations of sand, gravel, silt and cobbles. In the Puget Sound region, extensive recessional outwash deposits were formed during the retreat of glacial ice. These deposits generally consist of medium to very dense, poorly graded sand and gravel with cobbles, boulders and varying amounts of silt.

In eastern Washington, extensive sand and gravel deposits were deposited during catastrophic outburst floods from glacially dammed lakes in Montana. These deposits often consist of loose to dense, poorly graded sand and gravel with cobbles and boulders and varying amounts of silt. Slopes in sand and gravel deposits are generally stable at inclinations of from 1.5H:1V to 2H:1V, with the steeper inclinations used in the more granular soil units with higher relative densities. Perched water can be a problem, especially in western Washington, when water collects along zones of silty soil during wet months. These perched zones can cause shallow slope failures. If significant amounts of silt are not present in the soil, vegetation is often difficult to establish.

Glacially Overconsolidated Deposits – Glacially consolidated soils are found mainly in the Puget Sound Lowland and the glacial valleys of the Cascades. For engineering purposes, these deposits can generally be divided into cohesionless and cohesive soil. The cohesionless soil deposits are poorly sorted and consist of very dense sand and gravel with silt, cobbles, and boulders. The soil units exhibit some apparent cohesion because of the overconsolidation and fines content. If little or no groundwater is present, slopes will stand at near vertical inclinations for fairly long periods of time. However, perched groundwater on low permeability layers is very often present in these slopes and can contribute to instability. Typical inclinations in these soils range from 1.75H:1V to 1H:1V; although, the steeper slope inclinations should be limited to slopes with heights of about 20 feet or less. These slopes also work well with rockeries at slopes of 1H:6V to 1H:4V.

Overconsolidated cohesive soils such as described in Section 5.13.3 consist of very stiff to very hard silt and clay of varying, and may contain fissures and slickensides. These soils may stand at near vertical inclinations for very limited periods of time.

The relaxation of the horizontal stresses cause creep and may lead to fairly rapid failure. Slopes in these soils should be designed based on their residual friction angle and often need to be laid back at inclinations of 4H:1V to 6H:1V. See Section 5.13.3 for specific requirements regarding the design of slopes in this type of deposit.

10.3.2 Seepage Analysis and Impact on Design

The introduction of water to a slope is a common cause of slope failures. The addition of water often results in a reduction in shear strength of unsaturated soils. It raises the water table and adds to seepage forces, raising pore pressures and causing a corresponding reduction in effective stress and shear strength in saturated soil. Finally, it adds weight to the soil mass, increasing driving forces for slope failures. In addition, it can cause shallow failures and surface sloughing and raveling. These problems are most common in clay or silt slopes. It is important to identify and accurately model seepage within proposed cut slopes so that adequate slope and drainage designs are employed.

For slope stability analysis requiring effective stress/strength parameters, pore pressures have to be known or estimated. This can be done using several methods. The phreatic (water table) surface can be determined by installing open standpipes or observation wells. This is the most common approach. Piezometric data from piezometers can be used to estimate the phreatic surface, or peizometric surface if confined flow conditions exist. A manually prepared flow net or a numerical method such as finite element analysis can be used provided sufficient boundary information is available. The pore pressure ratio (r_u) can also be used. However, this method is generally limited to use with stability charts or for determining the factor of safety for a single failure surface.

10.3.3 Drainage Considerations and Design

The importance of adequate drainage cannot be overstated when designing cut slopes. Surface drainage can be accomplished through the use of drainage ditches and berms located above the top of the cut, around the sides of the cut, and at the base of the cut. The following section on cut slopes in loess contains a more in-depth discussion on surface drainage.

Subsurface drainage can be employed to reduce driving forces and increase soil shear strength by lowering the water table, thereby increasing the factor of safety against a slope failure. Subsurface conditions along cut slopes are often heterogeneous. Thus, it is important to accurately determine the geologic and hydrologic conditions at a site in order to place drainage systems where they will be the most effective. Subsurface drainage techniques available include cut-off trenches, horizontal drains and relief wells.

Cut-off trenches are constructed by digging a lateral ditch near the top of the cut slope to intercept ground water and convey it around the slope. They are effective for shallow groundwater depths. If the groundwater table needs to be lowered to a greater depth, horizontal drains can be installed, if the soils are cohesionless and granular in nature. Horizontal drains are generally not very effective in finer grained soils. Horizontal drains consist of small diameter holes drilled at slight angles into

a slope face and backfilled with perforated pipe wrapped in drainage geotextile. Installation might be difficult in soils containing boulders, cobbles or cavities. Horizontal drains require periodic maintenance as they tend to become clogged over time. Relief wells can be used in situations where the water table is at a great depth. They consist of vertical holes cased with perforated pipe connected to a disposal system such as submersible pumps or discharge channels similar to horizontal drains. They are generally not common in the construction of cut slopes.

Whatever subsurface drainage system is used, monitoring should be implemented to determine its effectiveness. Typically, piezometers or observation wells are installed during exploration. These should be left in place and periodic site readings should be taken to determine groundwater levels or pore pressures depending on the type of installation. High readings would indicate potential problems that should be mitigated before a failure occurs.

Surface drainage, such as brow ditches at the top of the slope, and controlling seepage areas as the cut progresses and conveying that seepage to the ditch at the toe of the cut, should be applied to all cut slopes. Subsurface drainage is more expensive and should be used when stability analysis indicates pore pressures need to be lowered in order to provide a safe slope. The inclusion of subsurface drainage for stability improvement should be considered in conjunction with other techniques outlined below to develop the most cost effective design meeting the required factor of safety.

10.3.4 Stability Improvement Techniques

There are a number of options that can be used in order to increase the stability of a cut slope. Techniques include:

- Flattening slopes
- Benching slopes
- Lowering the water table (discussed previously)
- Structural systems such as retaining walls or reinforced slopes.

Changing the geometry of a cut slope is often the first technique considered when looking at improving stability. For flattening a slope, enough right-of-way must be available. As mentioned previously, stability in purely dry cohesionless soils depends on the slope angle, while the height of the cut is often the most critical parameter for cohesive soils. Thus, flattening slopes usually proves more effective for granular soils with a large frictional component. Benching will often prove more effective for cohesive soils. Benching also reduces the amount of exposed face along a slope, thereby reducing erosion. Figure 10.1 shows the typical configuration of a benched slope. Structural systems are generally more expensive than the other techniques, but might be the only option when space is limited.

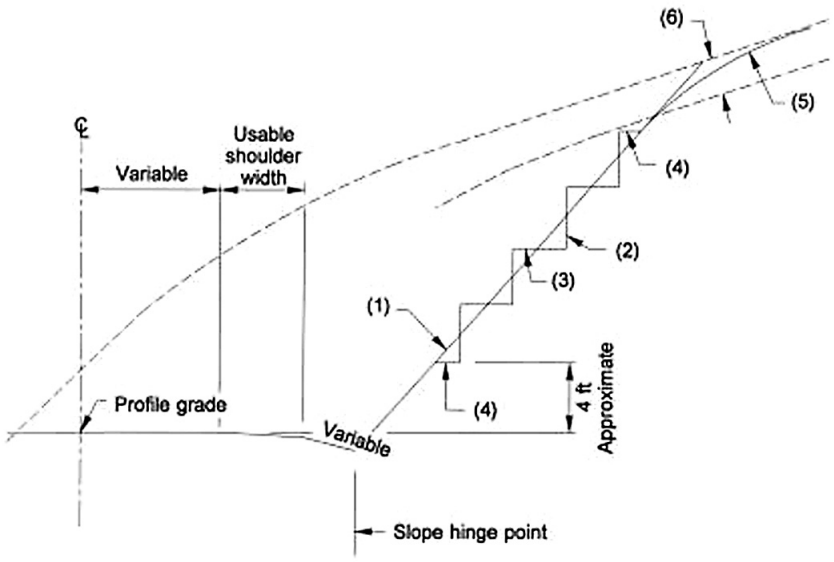

Notes:
(1) Staked slope line - Maximum slope 1H:1V.
(2) Step rise - heaight variable 1 foot to 2 feet.
(3) Step tread - width = staked slope ratio × step rise.
(4) Step termini - width = 1/2 step tread width.
(5) Slope rouding.
(6) Overburden area - variable slope ratio.

Typical Roadway Section With Stepped Slopes
(From Design Manual Figure 1230-8)
Figure 10-1

Shallow failures and sloughing can be mitigated by placing 2 to 3-foot thick rock drainage blanket over the slope in seepage areas. Moderate to high survivability permanent erosion control geotextile should be placed between native soil and drain rock to keep fines from washing out and/or clogging the drain rock.

In addition, soil bioengineering can be used to stabilize cut slopes against shallow failures (generally less than 3 feet deep), surface sloughing and erosion along cut faces. Refer to the *Design Manual* M 22-01 Chapter 940 for uses and design considerations of soil bioengineering.

10.3.5 Erosion and Piping Considerations

Surface erosion and subsurface piping are most common in clean sand, nonplastic silt and dispersive clays. Loess is particularly susceptible. However, all cut slopes should be designed with adequate drainage and temporary and permanent erosion control facilities to limit erosion and piping as much as possible. See Sections *10.3.3* and *10.5* for more information on drainage structures.

The amount of erosion that occurs along a slope is a factor of soil type, rainfall intensity, slope angle, length of slope, and vegetative cover. The first two factors cannot be controlled by the designer, but the last three factors can. Longer slopes can be terraced at approximate 15- to 30-foot intervals with drainage ditches installed to collect water. Best Management Practices (BMPs) for temporary and permanent

erosion and stormwater control as outlined in the WSDOT *Highway Runoff Manual* and WSDOT *Roadside Manual* should always be used. Construction practices should be specified that limit the extent and duration of exposed soil. For cut slopes, consideration should be given to limiting earthwork during the wet season and requiring that slopes be covered as they are exposed, particularly for highly erodable soils mentioned above.

10.4 Use of Excavated Materials

The suitability of soil excavated from a roadway cut section for reuse should be determined by a combination of site reconnaissance, boring information and laboratory testing. Soil samples obtained from SPT testing are generally too small to be used for classifying soils as gravel borrow, select borrow, etc. Bulk soil samples obtained from test pits are more appropriate to determine the appropriate engineering characteristics, including compaction characteristics, of all soil units.

Based on the exploration and laboratory testing program, the geotechnical designer should determine the extent of each soil unit, the preferred uses for each unit (i.e. common fill, structural fill, drain rock, riprap, etc.), and any measures necessary for improvement of soil units to meet a particular specification. Soil excavated from within the roadway prism intended for use as embankment fill should generally meet, as a minimum, *Standard Specification* 9-03.14(3) for common borrow. However, both common borrow and select borrow are not usable as an all weather material. If all weather use is desired, the material should meet the specifications for gravel borrow per the WSDOT Standard Specifications. Any soil units considered unsuitable for reuse such as highly plastic soil, peat, and muck should be identified.

Consideration should be given to the location and time of year that construction will likely take place. In western Washington, in place soil that is more than a few percentage points over optimum moisture content is often impractical to aerate and dry back and must be wasted, stockpiled for later use or conditioned with admixtures. Even glacially overconsolidated soil with a high fines content that is near the optimum moisture content may become too wet for proper compaction during excavation, haul and placement. Laboratory testing consisting of the standard and modified Proctor (ASSHTO T 99 and T 180, respectively) tests should be performed on bulk samples, if the fines content indicates the soil may be moisture sensitive (generally more than about 10 percent). The *Standard Specification Section* 2-03.3(14)D requires that maximum density for soil with more than 30 percent by weight retained on the U.S. No. 4 sieve be determined by WSDOT Test Method 606. Test Method 606 does not provide reliable information on the optimum moisture content for placement. Therefore, the modified Proctor test should be performed to determine the optimum moisture.

Techniques such as adding portland cement to stabilize wet soil have been used on WSDOT projects in the past. The addition of cement can lower the moisture content of soil a few percent and provide some strength. However, concerns regarding the pH of runoff water from the project site may limit the use of this technique on some sites. The FHWA Publication “Soil and Base Stabilization and Associated Drainage Considerations, Volumes 1 and 2” (SA-93-004 & SA-93-005) provide additional information on soil amendments.

The RME or geotechnical designer should provide guidance in determining shrink/swell factors for earthwork computations. Soil excavated from cuts and then compacted for embankment construction typically has a shrinkage factor. Values vary based on soil type, in-place density, method of fill construction and compactive effort. Soil wasted typically has a swell factor because material is often end-dumped at the waste site. The shrink/swell factor for soil that will be reused can be estimated by determining the ratio of in situ density versus compacted density determined from Proctor tests. Corrections may need to be applied for oversize particles screened out of xcavated material. Local experience with similar soil also can be used to determine shrink/swell factors. Typical shrink/swell factors for various soils and rock are presented in Table 10-1.

Material	In situ wet unit weight (pcf)	Percent Swell	Loose Condition wet unit weight (pcf)	Percent Shrink (-) or Swell (+)	Compacted wet unit weight (pcf)
Sand	114	5	109	-11	129
Sandy Gravel	131	5	124	-7	141
Silt	107	35	79	-17	129
Loess	91	35	67	-25	120
Rock/Earth Mixtures					
75% R/25 % E	153	25	122	+12	136
50% R/50% E	139	29	108	-5	146
25% R/75% E	125	26	99	-8	136
Granite	168	72	98	+28	131
Limestone	162	63	100	+31	124
Sandstone	151	61	94	+29	117
Shale-Siliceous	165	40	118	+25	132
Siltstone	139	45	96	+9	127

Approximate Shrink/Swell Factors
(From Alaska DOT Geotechnical Procedures Manual, 1983)
Table 10-1

10.5 Special Considerations for Loess

Loess is an aeolian (wind deposited) soil consisting primarily of silt with fine sand and clay, generally found in the southeastern part of the state. See Figure 10-2 for general extents of loess deposits found within Washington state. Loess contains a large amount of void space, and particles are held together by the clay component. It can stand at near vertical slopes indefinitely provided its moisture content remains low. However, upon wetting it loses strength and because of its open structure can experience large rapid deformations that can result in slope failures. Slope failures in loess soil can occur as either shallow slides or flows or rotational slides. Loess is also highly prone to erosion and piping.

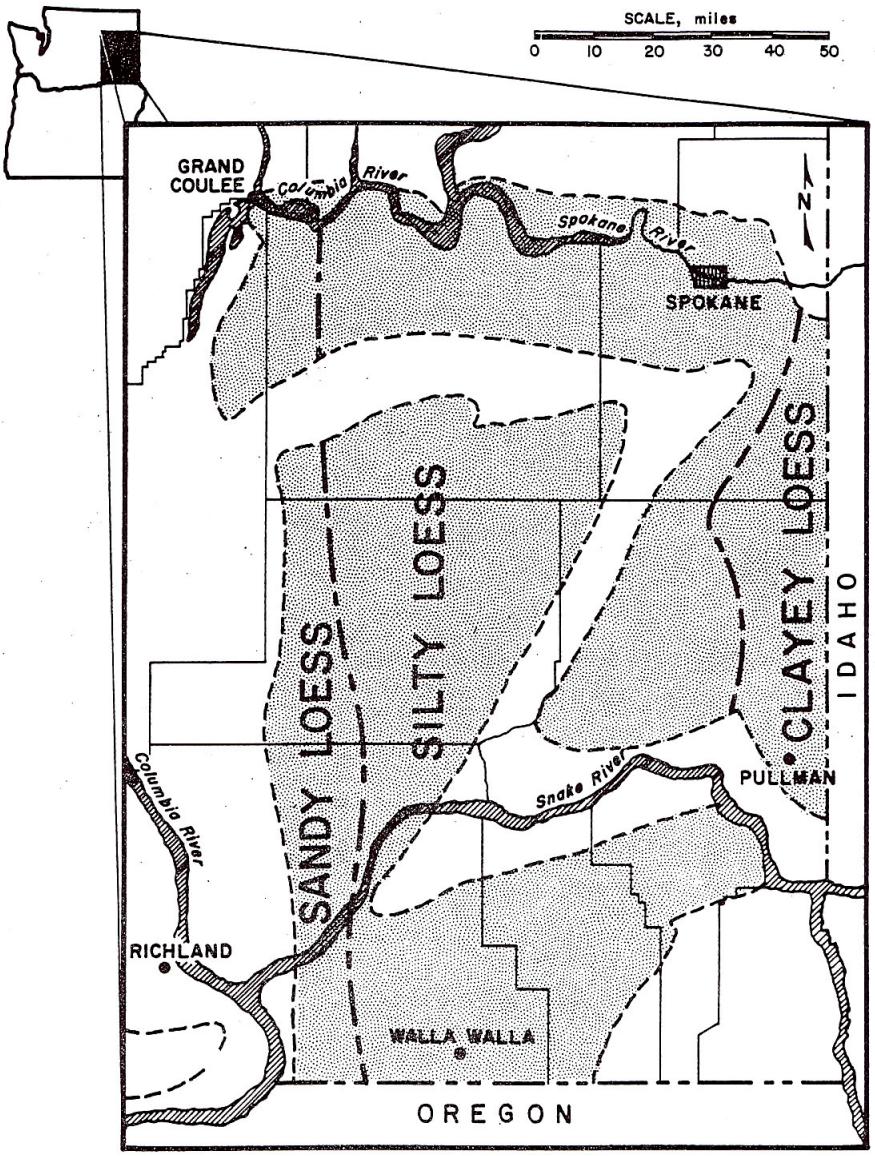

Approximate Gradation of Boundaries for Washington Loess (After Higgins and Fragaszy, WA-RD 145.2)
Figure 10-2

Loess Can be Broken Down into Three Main Types – Clayey loess, silty loess, and sandy loess, based on grain size analysis (see Figure 10-3). Past research indicates that cuts in silty loess deposits with low moisture contents can stand at near vertical slopes (0.25H:1V), while cuts in clayey loess deposits perform best at maximum slopes of 2.5H:1V. Soils characterized as sandy loess can be designed using conventional methods. WSDOT manual "Design Guide for Cut Slopes in Loess of Southeastern Washington" (WA-RD 145.2) provides an in-depth discussion on design of cut slopes in loess.

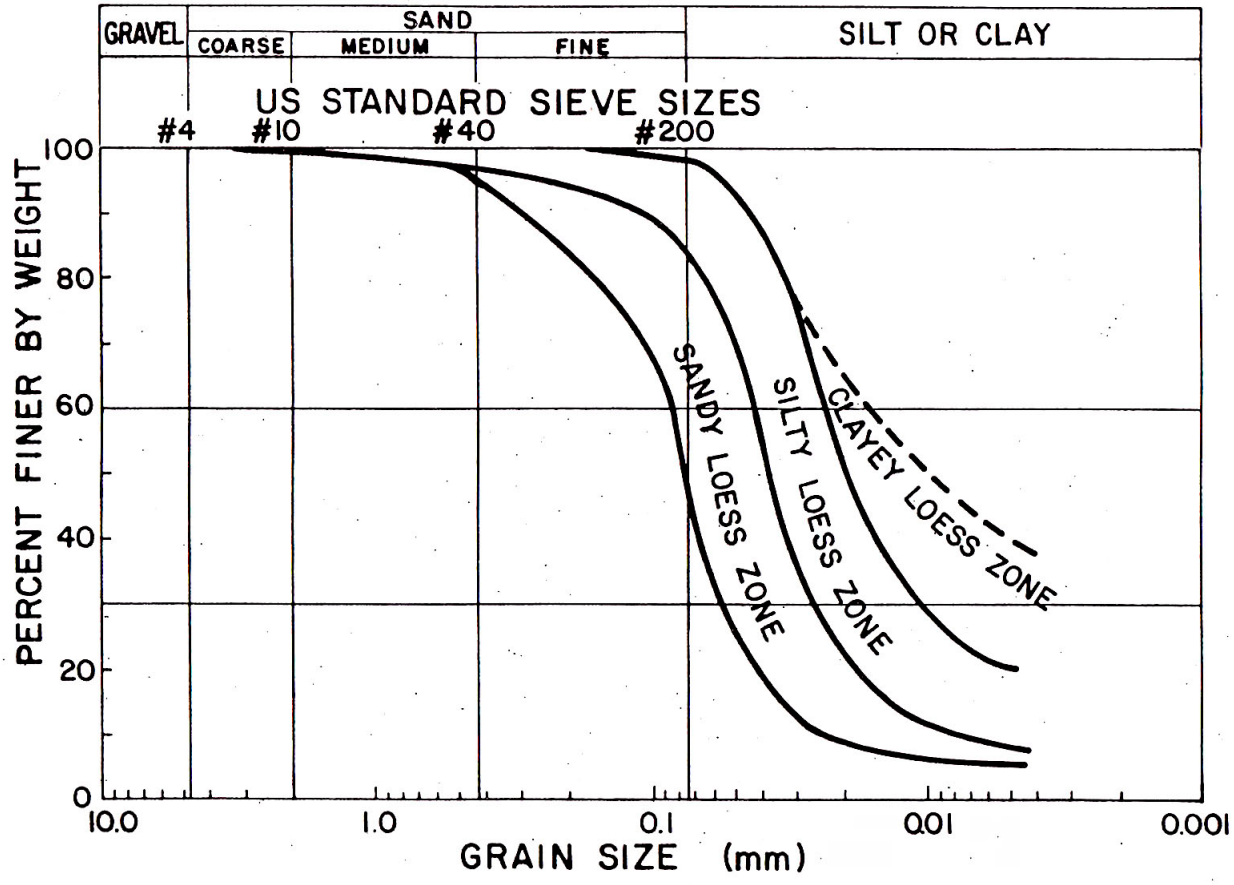

Definition of Sandy, Silty, and Clayey Loess for Southeastern Washington (After Higgins and Fragaszy, 1988)
Figure 10-3

The two most important factors affecting performance of cut slopes in loess are gradation and moisture content. Moisture content for near vertical slopes is crucial. It should not be over 17 percent. There should be no seepage along the cut face, especially near the base. If there is a possibility of groundwater in the cut, near vertical slopes should not be used. Maintenance of moisture contents below critical values requires adequate drainage facilities to prevent moisture migration into the cut via groundwater or infiltration from the surface.

The design of cut slopes in loess should include the following procedures that have been adapted from WA-RD 145.2 (Higgins and Fragaszy, 1988):

1. Perform office studies to determine possible extents of loess deposits along the proposed road alignment.
2. Perform field reconnaissance including observation of conditions of existing cut slopes in the project area.
3. Perform field exploration at appropriate locations. For loess slope design, continuous sampling in the top 6 feet and at 5 foot intervals thereafter should be used.

4. Perform laboratory grain-size analysis on representative samples throughout the depth of the proposed cut and compare the results with Figure 10-3. If the soil falls within the zone of sandy loess, or if sandy layers or other soils are encountered that do not classify as silty or clayey loess, design using conventional soil mechanics methods. If the soil falls within the zone of clayey loess, design using a maximum slope inclination of 2.5H:1V. If the soil falls within the zone of silty loess, the slope may be designed using a 0.25H:1V inclination provided that moisture contents will be within allowable levels as described in subsequent steps. See Figure 10-4 for typical sections in silty and clayey loess. If deep cuts (greater than about 50 feet) are to be used, or if moisture contents during the design life of the slope greater than 17 percent are expected, it is recommended that laboratory shear strength testing be run in order to perform slope stability analysis. If moisture contents below 17 percent are expected, total stress analysis can be used. If moisture contents above 17 percent are expected, effective stress analysis should be used. Care should be taken when using laboratory shear strength data because of the difficulty obtaining undisturbed samples in loess.
5. Determine if groundwater or seasonal perched water might be present. If so, the cut slope should be designed for a maximum slope of 2.5H:1V and appropriate drainage design applied. Slopes flatter than 2.5H:1V might be necessary because of seepage forces. In this case a drainage blanket may be required. See step 4 if slope stability analysis is required.
6. Perform moisture content analysis on representative samples. Moisture contents within the proposed slope above 17 percent indicate the soil structure is potentially unstable and prone to collapse. If moisture contents are below 17 percent and the soil classifies as silty loess, design for near vertical slopes. Otherwise, design for maximum slopes of 2.5H:1V. See step 4 if slope stability analysis is required.
7. Near vertical slopes should be benched on approximately 20 feet vertical intervals when the total height of the cut exceeds 30 feet. Benches should be 10 to 15 feet wide and gently sloped (10H:1V) towards the back of the cut to prevent water from flowing over the cut face. Benches should maintain a gradient for drainage not exceeding 3 to 5 percent. See number 4 if slope stability analysis is required.
8. Adequate drainage control is extremely important in loess soil due to its strength dependence on moisture content and high potential for erosion. The following section outlines general drainage design considerations for loess slopes. These designs can also be employed for cut slope design in other soils. However, as stated previously, loess soils are generally more susceptible to erosion and wetting induced slope failures, so the design of drainage structures for loess slopes might be overconservative when applied to other soils.

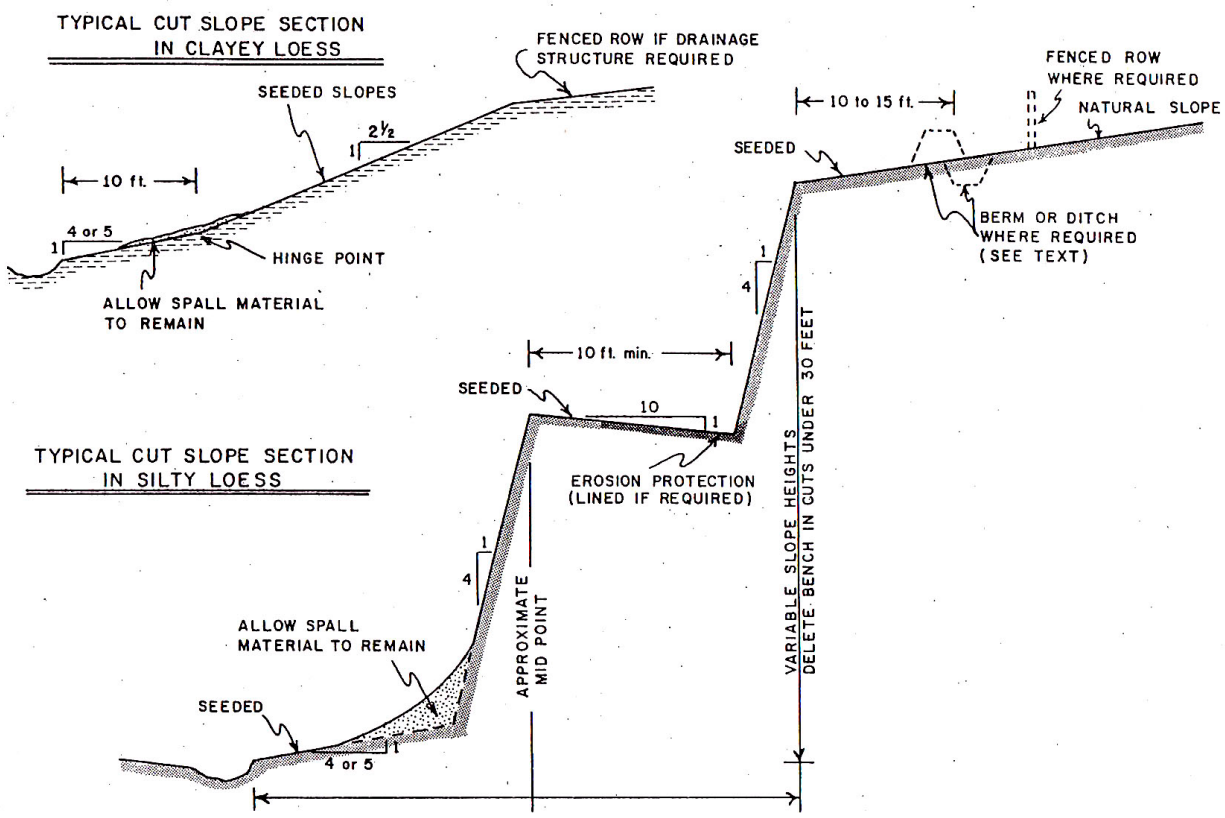

Typical Sections for Cut Slopes in Silty and Clayey Loess
(After Higgins and Fragaszy, 1988)
Figure 10-4

Drainage at Head of Slopes – For silty loess, a drainage ditch or berm should be constructed 10 to 15 feet behind the top of the slope prior to excavation. Provided the gradient is less than about 5 percent, a flat bottomed, seeded drainageway will be adequate. A mulch or geotextile mat should be used to protect the initial seeding. If the slope is located where adequate vegetation will not grow, a permanent erosion control geotextile covered with crushed rock or coarse sand can be used. The sizing of cover material should be based on flow velocities. The geotextile should be chosen to prevent erosion or piping of the underlying loess and strong enough to withstand placement of the cover material. Gradients greater than about 5 percent will require a liner similar to those used to convey water around the sides of cut slopes as described below. For clayey loess a drainage way behind the top of a cut slope is necessary only when concentrated flows would otherwise be directed over the slope face. In this case drainage should be the same as for silty loess. See Figure 10-5 for drainage details at the head of cut slopes in silty loess.

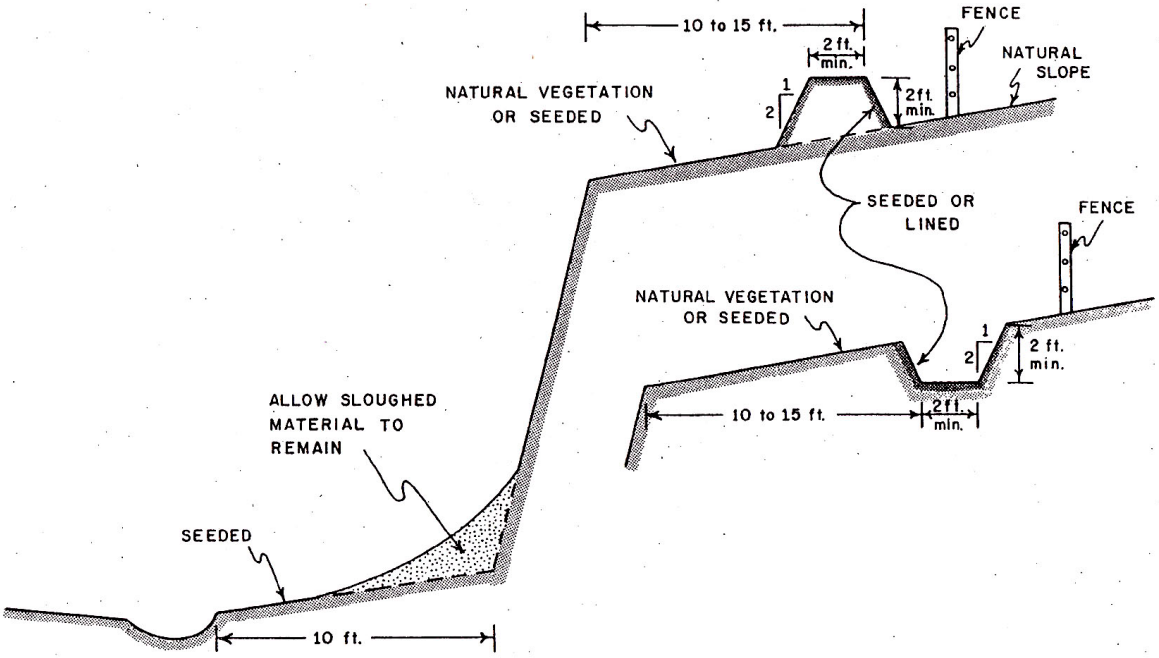

Drainage Above a Cut Slope in Silty Loess
(After Higgins and Fragaszy, 1988)
Figure 10-5

Drainage Around Sides of Cut Slopes – Drainageways around the sides of slopes generally have higher gradients (about 5 to 10 percent) than those at the tops of slopes. WSDOT WA-RD 145.2 (Higgins and Fragaszy, 1988) recommends four general designs for drainageways within this gradient range:

1. Line the drainageway with permanent erosion control geotextile and cover with coarse crushed rock.
2. Line the drainageway with permanent erosion control geotextile under a gabion blanket.
3. Construct the drainageway with a half-rounded pipe. The pipe should be keyed into the top of the slope to prevent erosional failure, and adequate compaction should be provided around the pipe to prevent erosion along the soil/pipe interface. Care should be taken to prevent leakage at pipe joints.
4. Line the drainageway with asphalt or concrete. This approach is expensive, and leakage can lead to piping and eventual collapse of the channel.

Drainage Over the Face of Cut Slopes – Where cuts will truncate an existing natural drainage basin, it is often necessary to convey water directly over the face of slopes due to the excessive ROW required to convey water around the sides. At no point should water be allowed to flow freely over the unprotected face of a cut slope. WSDOT WA-RD145.2 (Higgins and Fragaszy, 1988) lists three possible designs for this scenario in clayey loess and two possible designs in silty loess. For clayey loess:

1. Cut a shallow, flat bottomed ditch into the slope face. The ditch should be lined with permanent erosion control geotextile and covered with a gabion mat or coarse rock

2. Use a half-rounded pipe as described previously.
3. Use an asphalt or concrete liner.

For silty loess with a near vertical slope:

1. Intercept the drainage high enough above the cut to channel it around the sides using techniques described previously for drainage around the sides of cut slopes.
2. Convey water over the slope face using a PVC pipe connected to a collection area impounded by a berm located above the head of the slope. The pipe should be installed above the ground and sealed against the berm to prevent seepage along the outside of the pipe. The pipe also should be anchored both above and below the slope face, and a splash plate should be provided at the bottom to prevent undercutting of the slope. Figure 10-6 shows details of drainage over a cut face. This design is best suited for low to moderate flow volumes in conjunction with berm drainage. It should not be used with ditches.

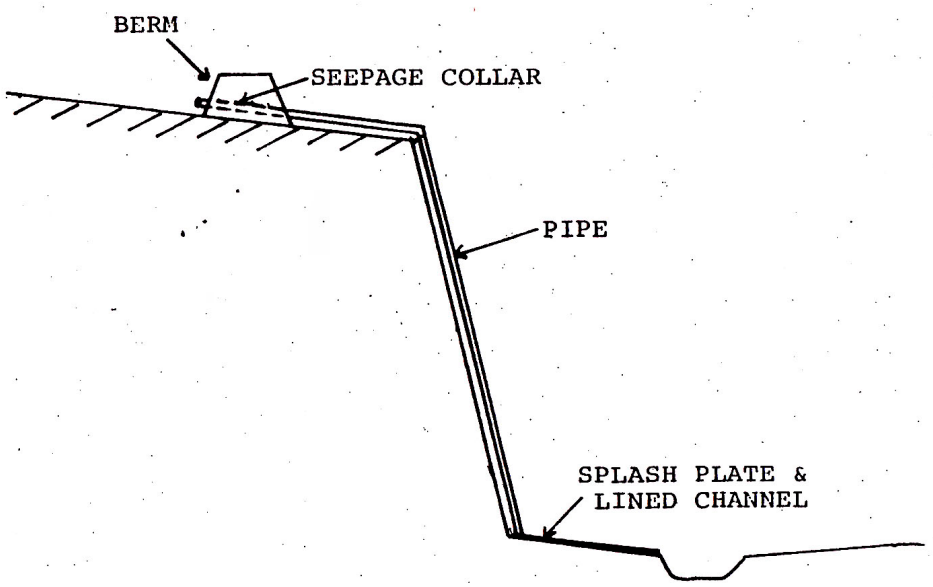

Drainage Over a Cut Slope
(After Higgins and Fragaszy, 1988)
Figure 10-6

Drainage at the Toe of slopes – Drainage ditches along the roadway should be constructed at least 10 feet from the toe of the slope, and the ground surface should be gently sloped toward the ditch.

Sufficient right-of-way should be available to ensure that future agricultural activities are kept away from the top of the cut slope to keep drainageways from being filled in and to limit excessive disturbance around the cut slope.

Finally, proper construction control should be implemented. Construction equipment should be kept away from the top of the slope once the cut has been made. The following recommendations all have the same focus, to limit the amount of water that might reach the slope face. Construction should be performed during the summer, if possible. Drainage ways above the top of the cut should be constructed prior to opening up the cut. Seeding or other slope protection should be implemented immediately following construction of the cut. All cut slopes should be uniform, i.e. compound slopes should not be allowed. If animal holes are present that would create avenues for piping, they should be backfilled with low permeability fines or grout.

A design checklist taken from WA-RD 145.2 (Higgins and Fragaszy, 1988) is included in *Appendix 10-A*.

10.6 PS&E Considerations

Considerations concerning PS&E and construction generally consist of specifying the extents and periods during which earthwork is permitted in order to limit soil disturbance and erosion. Specifications should also be included that require construction of adequate drainage structures prior to grubbing and that construction equipment stay away from the tops of completed cut slopes.

In general, excavation for slopes should proceed in the uphill direction to allow surface or subsurface water exposed during excavation to drain without becoming ponded. Cut slopes should not be cut initially steeper, and then trimmed back after mass excavation. This procedure can result in cracks and fissures opening up in the oversteepened slope, allowing infiltration of surface water and a reduction in soil shear strength.

Both permanent and temporary cuts in highly erodable soil should be covered as they are excavated. Vegetation should be established on permanent slopes as soon as feasible. Only uniform slopes should be constructed in loess or other erodable soil (no compound slopes) in order to prevent erosion and undercutting.

10.7 References

AASHTO "Standard Specifications for Transportation Materials and Methods of Sampling and Testing," Part 2: Tests.

Alaska DOT, *Geotechnical Procedures Manual*, 1983.

Abramson, L., Boyce, G., Lee, T., and Sharma, S., 1996, *Slope Stability and Stabilization Methods*, Wiley, ISBN 0471106224.

FHWA, 1993, *Soil and Base Stabilization and Associated Drainage Considerations*, Vol 1, FHWA-SA-93-004.

FHWA, 1993, *Soil and Base Stabilization and Associated Drainage Considerations*, Vol 2, FHWA-SA-93-005

Higgins, J. D., and Fragaszy, R. J., and Martin, T., 1987, *Engineering Design in Loess Soils of Southeastern Washington*, WSDOT Research Report WA-RD 145.1, 121 pp.

Higgins, J. D., and Fragaszy, R. J., 1988, *Design Guide for Cut Slopes in Loess of Southeastern Washington*, WSDOT Research Report WA-RD 145.2, 57 pp.

Design Manual M 22-01

Highway Runoff Manual M 31-16, 2004

Roadside Manual.

Standard Specifications for Road, Bridge, and Municipal Construction M 21-01, 2004

Appendix 10-A Loess Slope Design Checklist

The Loess Site Design Checklist has been prepared to aid the geotechnical engineer in the preliminary site investigation, field investigation layout, and design evaluation of highway construction in a loess soil region where cut slopes are required. This checklist was adapted from the Design Guide for Cut Slopes in Loess of Southeastern Washington, WA-RD 142.5 (Higgins and Fragaszy, 1988).

The checklist has been organized into five categories. The five categories include:

1. Project Definition
2. Project Field Data
3. Geotechnical Investigation
4. Laboratory Testing
5. Design Evaluation and Recommendations

Project Definition	Yes	No	N/A
1. Is the proposed construction within a loess region? If yes, what loess type is present? (Figure 10.3) ❒ Sandy Loess ❒ Silty Loess ❒ Clayey Loess	❒	❒	❒
2. Does the proposed construction involve complete realignment?	❒	❒	❒
3. Does the proposed construction involve minor realignment?	❒	❒	❒
4. Has an assessment been made of the current land management activities, e.g. review recent aerial photography?	❒	❒	❒
5. Has an assessment been made of the potential for land use changes, e.g. converting dryland farming to irrigation farming?	❒	❒	❒

Project Field Data	Yes	No	N/A
1. Is a county soil survey report available for review? If yes, answer the following:	❒	❒	❒
a. Have major soil types along the proposed route been identified?	❒	❒	❒
b. Have important soil parameters of those major soil types been identified? i.e. grain size distribution, percent clay vs. depth, permeability, drainage, depth to bedrock, agricultural use, irrigation potential.	❒	❒	❒
2. Have plans, profiles and cross sections been reviewed?	❒	❒	❒
3. Do the cross sections show the existing ground line beyond the top of the proposed cut?	❒	❒	❒
4. Have all major cut and fill slopes been located?	❒	❒	❒
5. What cut slope inclinations are desired by the Region: ____ ¼:1 ____2.5:1 or ____other If other, identify proposed cut slope angle and reason.	❒	❒	❒
6. If ¼:1 cuts area proposed, is there sufficient right-of-way to accommodate the required drainage facilities and fencing?	❒	❒	❒
7. Are there any existing or proposed structures present near the top of the proposed backslope?	❒	❒	❒

Geotechnical Investigation	Yes	No	N/A
1. Does the site investigation meet the minimum requirements established by WSDOT and FHWA, e.g. frequency of sampling holes, depth of holes, sample of frequency, hole locations, etc.?	❒	❒	❒
2. Were all major cuts represented by samples taken at depth in the loess?	❒	❒	❒
3. Were all cut slope aspects represented in the sampling process?	❒	❒	❒
4. On projects where minor sliver cuts are required, did sampling (hand auger holes) along the face of the existing cut extend a minimum of 4 feet into the face?	❒	❒	❒
5. Has the soil sampling been continuous in the top 6 feet and then every 5 feet thereafter?	❒	❒	❒
6. Was the soil investigation conducted during the wet time of year?	❒	❒	❒
7. Was natural field moisture determined from samples sealed in soil sample cans?	❒	❒	❒
8. Was groundwater encountered in any of the test borings?	❒	❒	❒
If yes, were piezometers installed for monitoring purposes?	❒	❒	❒
9. Is the groundwater perched on an impermeable layer (i.e. bedrock)?	❒	❒	❒
10. Will the proposed cut daylight the groundwater table?	❒	❒	❒
11. Has a field review of the condition of existing loess slope cuts been made?	❒	❒	❒
12. What is the repose of the existing cuts in the vicinity of the proposed project?	❒	❒	❒
13. Are the existing cuts in ____good, ____average, ____poor condition? Explain in detail.	❒	❒	❒

Laboratory Testing	Yes	No	N/A
1. Have Atterberg limits been performed?	❒	❒	❒
2. Have hydrometer tests been performed?	❒	❒	❒
3. Have sieve analyses been performed?	❒	❒	❒
4. Has field moisture been calculated?	❒	❒	❒
5. Has the shear strength been determined on representative samples from cuts exceeding 50 feet in height?	❒	❒	❒

Design Evaluation and Recommendations	Yes	No	N/A
1. Has the laboratory data been summarized, i.e. graphs representing percent clay vs. depth, and percent field moisture with depth?	❒	❒	❒
2. Based on criteria in Figure 10.3 and Section 10.5 of this chapter has the project loess soil been appropriately classified as to type and critical moisture?	❒	❒	❒
3. Are the recommended cuts based on guidelines in Section 10.5 of this chapter? If answer is no, is a justification given?	❒	❒	❒
4. Were there specific recommendations made of erosion control, e.g. backslopes, sideslopes, ditches? (This is absolutely critical to the successful use of cut slopes in loess; surface runoff must be collected and discharge so as not to saturate and erode the cut face.)	❒	❒	❒
5. If ¼:1 cut slopes are recommended, answer the following:	❒	❒	❒
a. Has a drainage profile along the proposed ditch been established?	❒	❒	❒
b. Does the ditch extend to a cut/fill transition or to a drainage structure?	❒	❒	❒
c. If the gradient of the ditch exceeds 5 percent is there the provision for ditch erosion protection i.e. asphalt or concrete or rock/geotextile lined ditch?	❒	❒	❒
d. Is there the provision for discharging water (without saturating the cut slope) from the ditch to the road grade line at low water collection points along the ditch profile?	❒	❒	❒
e. Is the proposed drainage ditch a minimum of 10 feet from the face of the ¼:1 cut slope?	❒	❒	❒
f. Does the design include the construction of a controlled access fence?	❒	❒	❒
6. If 2.5:1 cut slopes are recommended answer the following:	❒	❒	❒
a. If the cut intersects a natural drainageway have provisions been made to discharge the water over or around the face?	❒	❒	❒
b. Where soil is exposed to concentrated flow, such as in a ditch, is there provision for erosion protection?	❒	❒	❒

Chapter 11 Ground Improvement

11.1 Overview

Ground improvement is used to address a wide range of geotechnical engineering problems, including, but not limited to, the following:

- Improvement of soft or loose soil to reduce settlement, increase bearing resistance, and/or to improve overall stability for structure and wall foundations and/or for embankments.
- To mitigate liquefiable soils.
- To improve slope stability for landslide mitigation.
- To retain otherwise unstable soils.
- To improve workability and usability of fill materials.
- To accelerate settlement and soil shear strength gain.

Types of ground improvement techniques include the following:

- Vibrocompaction techniques such as stone columns and vibroflotation, and other techniques that use vibratory probes that may or may not include compaction of gravel in the hole created to help densify the soil
- Deep dynamic compaction
- Blast densification
- Geosynthetic reinforcement of embankments
- Wick drains, sand columns, and similar methods that improve the drainage characteristics of the subsoil and thereby help to remove excess pore pressure that can develop under load applied to the soil
- Grout injection techniques and replacement of soil with grout such as compaction grouting, jet grouting, and deep soil mixing
- Lime or cement treatment of soils to improve their shear strength and workability characteristics
- Permeation grouting and ground freezing (temporary applications only)

Each of these methods has limitations regarding their applicability and the degree of improvement that is possible.

Rock mass improvement techniques such as bolting dowelling, shotcreting, etc., are not presented in this chapter, but are addressed in Chapter 12.

11.2 Development of Design Parameters and Other Input Data for Ground Improvement Analysis

In general, the geotechnical investigation conducted to design the cut, fill, structure foundation, retaining wall, etc., that the improved ground is intended to support will be adequate for the design of the soil improvement technique proposed. However, specific soil information may need to be emphasized depending on the ground improvement technique selected.

For example, for vibro-compaction techniques, deep dynamic compaction, and blast densification, detailed soil gradation information is critical to the design of such methods, as minor changes in soil gradation characteristics could affect method feasibility. Furthermore, the in-situ soil testing method used (e.g., SPT testing cone testing, etc.) will need to correspond to the technique specified in the contract to verify performance of the ground improvement technique, as the test data obtained during design will be the baseline to which the improved ground will be compared. Other feasibility issues will need to be addressed if these types of techniques are used. Critical is the impact the vibrations caused by the improvement technique will have on adjacent structures. Investigation of the foundations and soil conditions beneath adjacent structures and utilities may be needed, in addition to precondition surveys of the structures to enable identification of any damage caused by the ground improvement technique, if the risk of damage to adjacent structures and utilities is estimated to be acceptably low.

For wick drains, the ability to penetrate the soil with the wick drain mandrel, in addition to obtaining good rate of settlement information, must be assessed. Good Atterberg limit and water content data should be obtained, as well as any other data that can be useful in assessing the degree of overconsolidation of the soil present, if any.

Grout injection techniques (not including permeation grouting) can be used in a fairly wide range of soils, provided the equipment used to install the grout can penetrate the soil. The key here is to assess the ability of the equipment to penetrate the soil, assign the soil density and the potential for obstructions such as boulders.

Permeation grouting is more limited in its application, and its feasibility is strongly dependent on the ability of the grout to penetrate the soil matrix under pressure. Detailed grain size characterization and permeability assessment must be conducted, as well as the effect ground water may have on these techniques, to evaluate the feasibility of these techniques. An environmental assessment of such techniques may also be needed, especially if there is potential to contaminate groundwater supplies. These techniques are highly specialized and require the approval of the State Geotechnical Engineer before proceeding with a design based on using these techniques.

Similarly, ground freezing is a highly specialized technique that is strongly depending on the soil characteristics and groundwater flow rates present. Again, approval of the State Geotechnical Engineer is required before proceeding with a design based on using this technique.

11.3 Design Requirements

The design requirements provided in FHWA manual No. FHWA-SA-98-086 "Ground Improvement Technical Summaries" (Elias, et al., 2000) shall be followed. In addition, for stone column design, FHWA Report No. FHWA/RD-83/O2C "Design and Construction of Stone Columns" (Barkdale and Bachus, 1983) shall be used, for deep dynamic compaction, FHWA manual No. FHWA-SA-95-037, Geotechnical Engineering Circular No. 1, "Dynamic Compaction" (Lukas, 1995) shall be used, and for wick drain design, FHWA manual FHWA/RD-86/168 "Prefabricated Vertical Drains – A design and Construction Guidelines Manual" (Rixner, et al., 1986) shall be used.

For blast densification, the methodology and general approach described in Kimmerling (1994), and the additional design guidelines provided by Mitchell (1981) should be used. For lime and cement treatment of soils, Alaska DOT/FHWA Report No. FHWA-AK-RD-01-6B "Alaska Soil Stabilization Design Guide" (Hicks, 2002) shall be used for design. Design of geosynthetic base reinforcement and reinforced slopes are addressed in Chapters 9 and 15, respectively.

11.4 References

Barkdale, R. D., and Bachus, R. C., 1983, *Design and Construction of Stone Columns – Vol. 1*, Federal Highway Administration, FHWA/RD-83/02C.

Elias, V., Welsh, J., Warren, J., and Lukas, R., 2000, *Ground Improvement Technical Summaries – Vol. 1 and 2*, Demonstration Project 116, Federal Highway Administration, FHWA-SA-98-086.

Hicks, R. G., 2002, *Alaska Soil Stabilization Design Guide*, Alaska Department of Transportation and Federal Highway Administration Report No. FHWA-AK-RD-01-6B.

Kimmerling, R. E., 1994, *Blast Densification for Mitigation of Dynamic Settlement and Liquefaction*, WSDOT Research Report WA-RD 348.1, 114 pp.

Lukas, R. G., 1995, *Geotechnical Engineering Circular No. 1 – Dynamic Compaction*, Federal Highway Administration, FHWA-SA-95-037.

Mitchell, J. K., 1981, *Soil Improvement: State-of-the-Art Report*, Proceedings of the 10th International Conference on Soil Mechanics and Foundation Engineering, Stockholm, Sweden, pp. 509-565.

Rixner, J. J., Kraemer, S. R., and Smith, A. D., 1986, *Prefabricated Vertical Drains – Vol. 1: Engineering Guidelines*, Federal Highway Administration, FHWA/RD-86/168.

Chapter 12 Rock Cut Design

12.1 Overview

This chapter addresses the assessment of stable slopes for rock cuts, including planning for excavation (e.g., blasting plan development), and rock mass improvement techniques such as bolting, dowelling, shotcreting, etc., to produce a stable slope.

12.2 Development of Design Parameters and Other Input Data for Rock Cut Stability Analysis

In addition to the site reconnaissance and geotechnical investigation requirements described in Chapter 2, rock slope design heavily relies upon surface mapping and discontinuity logging in boreholes of rock structure to assess discontinuities (fracture/joint) patterns and conditions, as discontinuities strongly control rock slope stability. In some cases, test hole data should also obtained, especially if surface mapping is not feasible due to the presence of overburden soil or for other reasons. Assessment of ground water present in the rock discontinuities, as is true of any slope, is critical to the assessment of stability. The detailed requirements for site investigation and analysis of rock cuts provided in FHWA HI-99-007 "Rock Slopes Reference Manual" (Munfakh, et al., 1998) shall be used. In addition to the requirements provided in the FHWA manual, design parameters shall be developed in accordance with Chapter 5.

12.3 Design Requirements

The detailed requirements for design of rock cuts provided in FHWA HI-99-007 "Rock Slopes Reference Manual" (Munfakh, et al., 1998) shall be used. In addition, for the development of blasting plans for rock cut excavation, the FHWA manual entitled "Rock Blasting and Overbreak Control,"FHWA-HI-92-001 (Konya and Walter, 1991) shall be used.

12.4 References

Konya, C. J., and Walter, E. J., 1991, *Rock Blasting and Overbreak Control*, Federal Highway Administration, FHWA-HI-92-001.

Munfakh, G., Wyllie, D., and Mah, C. W., 1998, *Rock Slopes Reference Manual*, Federal Highway Administration, FHWA HI-99-007.

Chapter 13 Landslide Analysis and Mitigation

13.1 Overview

This chapter addresses the assessment of landslides in soil and rock, and the development of the mitigating measures needed to stabilize the landslide.

13.2 Development of Design Parameters and Other Input Data for Landslide Analysis

In addition to the site reconnaissance and geotechnical investigation requirements described in Chapter 2, the exploration requirements provided in Special TRB Report 247 "Landslides Investigation and Mitigation", Turner and Schuster, editors (1996) or "Landslides in Practice" by Cornforth (2005). Soil and rock properties for use in landslide analysis and mitigation shall be developed in accordance with Chapter 5.

13.3 Design Requirements

For landslides in soil and soft rock, the slope stability analysis methods and design requirements specified in Chapter 7 shall be used. For rockslides, the stability analysis method specified in Chapter 12 shall be used. The detailed requirements for analysis and mitigation design of landslides shall in addition be conducted in accordance with Special TRB Report 247 "Landslides Investigation and Mitigation", Turner and Schuster, editors (1996) or "Landslides in Practice" by Cornforth (2005).

13.4 References

Cornforth, D. H., 2005, Landslides in Practice, John Wiley and Sons, Hoboken, NJ, 596 pp.

Turner, A. K., and Schuster, R. L., editors, 1996, Landslides Investigation and Mitigation, Transportation Research Board, TRB Special Report 247, National Academy Press, Washington, DC, 673 pp.

Chapter 14 Unstable Rockslope Analysis and Mitigation

14.1 Overview

This chapter addresses the assessment of unstable rockslopes and the development of the mitigating measures needed to stabilize the rockslope or to safely prevent the rockfall from reaching the traveled way.

14.2 Development of Design Parameters and Other Input Data for Unstable Rockslope Analysis

In addition to the site reconnaissance and geotechnical investigation requirements described in Chapter 2, assessment of unstable rockslopes heavily relies upon surface mapping of rock structure to assess fracture/joint patterns and conditions, as rock fractures and joints strongly control rock slope stability, and observations from past rockfall events. The detailed requirements for investigation of unstable rockslopes provided in FHWA manual No. FHWA SA-93-085, "Rockfall Hazard Mitigation Methods" (Brawner, 1994).

14.3 Design Requirements

The design requirement specified in Chapter 12 for Rock cut design are applicable to assessment and stabilization of unstable rockslopes. In addition, to address the prediction of rockfall and its mitigation, the design requirements provided in FHWA manual No. FHWA SA-93-085, "Rockfall Hazard Mitigation Methods" (Brawner, 1994) shall be used.

14.4 References

Brawner, C.O., 1994, *Rockfall Hazard Mitigation Methods*, Federal Highway Administration,FHWA SA-93-085.

Chapter 15 Abutments, Retaining Walls, and Reinforced Slopes

15-1 Introduction and Design Standards

This chapter addresses the geotechnical design of the abutments as well as retaining walls and reinforced slopes. Abutments for bridges have components of both foundation design and wall design. Retaining walls and reinforced slopes are typically included in projects to minimize construction in wetlands, to widen existing facilities, and to minimize the amount of right of way needed in urban environments. Projects modifying existing facilities often need to modify or replace existing retaining walls or widen abutments for bridges.

There tends to be confusion regarding when they should be incorporated into a project, what types are appropriate, how they are designed, who designs them, and how they are constructed. The roles and responsibilities of the various WSDOT offices and those of the Department's consultants further confuse the issue of retaining walls and reinforced slopes, as many of the roles and responsibilities overlap or change depending on the wall type. This chapter does not fully address the roles and responsibilities of the various WSDOT offices with regard to wall and abutment design, and the design process that should be used. The *Design Manual* M 22-01 Chapter 730, should be consulted for additional guidance on these issues.

All abutments, retaining walls, and reinforced slopes within WSDOT Right of Way or whose construction is administered by WSDOT shall be designed in accordance with the *Geotechnical Design Manual* (GDM) and the following documents:

- *Bridge Design Manual (LRFD)* M 23-50
- *Design Manual* M 22-01
- AASHTO *LRFD Bridge Design Specifications*, U.S.

The most current versions or editions of the above referenced manuals including all interims or design memoranda modifying the manuals shall be used. In the case of conflict or discrepancy between manuals, the following hierarchy shall be used: Those manuals listed first shall supersede those listed below in the list.

The following manuals provide additional design and construction guidance for retaining walls and reinforced slopes and should be considered supplementary to the GDM and the manuals and design specifications listed above:

- Lazarte, C. A., Robinson, H., Gomez, J. E., Baxter, A., Cadden, A., and Berg, R., 2015. *Geotechnical Engineering Circular No. 7, Soil Nail Walls – Reference Manual*, U.S. Department of Transportation, Federal Highway Administration, FHWA-NHI-14-007, 425 pp.
- Porterfield, J. A., Cotton, D. A., Byrne, R. J., 1994, *Soil Nail Walls-Demonstration Project 103, Soil Nailing Field Inspectors Manual*, U.S. Department of Transportation, Federal Highway Administration, FHWA-SA-93-068, 86 pp.
- Samtani, N. C., and Nowatzki, E. A., 2006, *Soils and Foundations, Reference Manual-Volumes I and II*, Washington, D.C., National Highway Institute Publication, FHWA-NHI-06-088/089, Federal Highway Administration.

- Berg, R. R., Christopher, B. R., and Samtani, N. C., 2009, *Design of Mechanically Stabilized Earth Walls and Reinforced Slopes*, No. FHWA-NHI-10-024, Federal Highway Administration, 306 pp.
- Sabatini, P. J., Pass, D. G., and Bachus, R. C., 1999, *Geotechnical Engineering Circular No. 4, Ground Anchors and Anchored Systems*, FHWA-IF-99-015, 281 pp.

15-2 Overview of Wall Classifications and Design Process for Walls

The various walls and wall systems can be categorized based on how they are incorporated into construction contracts. Standard Walls comprise the first category and are the easiest to implement. Standard walls are those walls for which standard designs are provided in the WSDOT *Standard Plans*. The internal stability design and the external stability design for overturning and sliding stability have already been addressed in the Standard Plan wall design, and bearing resistance, settlement, and overall stability must be determined for each standard-design wall location by the geotechnical designer. All other walls are nonstandard, as they are not included in the *Standard Plans*.

Nonstandard walls may be further subdivided into proprietary or nonproprietary. Nonstandard, proprietary walls are patented or trademarked wall systems designed and marketed by a wall manufacturer. The wall manufacturer is responsible for internal stability. Sliding stability, eccentricity, bearing resistance, settlement, compound stability, and overall slope stability are determined by the geotechnical designer. Nonstandard, nonproprietary walls are not patented or trade marked wall systems. However, they may contain proprietary elements. An example of this would be a gabion basket wall. The gabion baskets themselves are a proprietary item.

However, the gabion manufacturer provides gabions to a consumer, but does not provide a designed wall. It is up to the consumer to design the wall and determine the stable stacking arrangement of the gabion baskets. Nonstandard, nonproprietary walls are fully designed by the geotechnical designer and, if structural design is required, by the structural designer. Reinforced slopes are similar to nonstandard, nonproprietary walls in that the geotechnical designer is responsible for the design, but the reinforcing may be a proprietary item.

A number of proprietary wall systems have been extensively reviewed by the Bridge and Structures Office and the HQ Geotechnical Office. This review has resulted in WSDOT preapproving some proprietary wall systems. The design procedures and wall details for these preapproved wall systems shall be in accordance with this manual and other manuals specifically referenced herein as applicable to the type of wall being designed, unless alternate design procedures have been agreed upon between WSDOT and the proprietary wall manufacturer. These preapproved design procedures and details allow the manufacturers to competitively bid a particular project without having a detailed wall design provided in the contract plans. Note that proprietary wall manufacturers may produce several retaining wall options, and not all options from a given manufacturer have been preapproved. The Bridge and Structures Office shall be contacted to obtain the current listing of preapproved proprietary systems prior to including such systems in WSDOT projects. A listing of the preapproved wall systems, as of the current publication date for this manual, is provided in Appendix 15-D. Specific preapproved details and system specific design requirements for each wall system are also included as appendices to Chapter 15. Incorporation of non-preapproved systems requires the wall supplier to completely design the wall prior to advertisement for construction.

All of the manufacturer's plans and details would need to be incorporated into the contract documents. Several manufacturers may need to be contacted to maintain competitive bidding. More information is available in chapters 610 and 730 of the *Design Manual* M 22-01.

If it is desired to use a non-preapproved proprietary retaining wall or reinforced slope system, review and approval for use of the wall or slope system on WSDOT projects shall be based on the submittal requirements provided in Appendix 15-C. The wall or reinforced slope system, and its design and construction, shall meet the requirements provided in this manual, including Appendix 15-A. For Mechanically Stabilized Earth (MSE) walls, the wall supplier shall demonstrate in the wall submittal that the proposed wall system can meet the facing performance tolerances provided in Appendix 15-A through calculation, construction technique, and actual measured full scale performance of the wall system proposed.

Note that MSE walls are termed Structural Earth (SE) walls in the *Standard Specifications* M 41-10 and associated General Special Provisions (GSPs). In the general literature, MSE walls are also termed reinforced soil walls. In this GDM, the term "MSE" is used to refer to this type of wall.

15-3 Required Information

15-3.1 Site Data and Permits

The *Design Manual* M 22-01 discusses site data and permits required for design and construction. In addition, chapters 610 and 730 provide specific information relating to geotechnical work and retaining walls.

15-3.2 Geotechnical Data Needed for Retaining Wall and Reinforced Slope Design

The project requirements, site, and subsurface conditions should be analyzed to determine the type and quantity of information to be developed during the geotechnical investigation. It is necessary to:

- Identify areas of concern, risk, or potential variability in subsurface conditions.
- Develop likely sequence and phases of construction as they may affect retaining wall and reinforced slope selection.
- Identify design and constructability requirements or issues such as:
  - *Surcharge loads from adjacent structures*
  - *Backslope and toe slope geometries*
  - *Right of way restrictions*
  - *Materials sources*
  - *Easements*
  - *Excavation limits*
  - *Wetlands*
  - *Construction Staging*
- Identify performance criteria such as:
  - *Tolerable settlements for the retaining walls and reinforced slopes*
  - *Tolerable settlements of structures or property being retained*
  - *Impact of construction on adjacent structures or property*
  - *Long-term maintenance needs and access*

- Identify engineering analyses to be performed:
  - *Bearing resistance*
  - *Settlement*
  - *Global stability*
  - *Internal stability*
- Identify engineering properties and parameters required for these analyses.
- Identify the number of tests/samples needed to estimate engineering properties.

Table 15-1 provides a summary of information needs and testing considerations for retaining walls and reinforced slope design.

Chapter 5 covers requirements for how the results from the field investigation, the field testing, and laboratory testing are to be used to establish properties for design. The specific tests and field investigation requirements needed for foundation design are described in the following sections.

Table 15-1 Summary of Information Needs and Testing Considerations

Geotechnical Issues	Engineering Evaluations	Required Information for Analyses	Field Testing	Laboratory Testing
Fill Walls/ Reinforced Soil Slopes	• internal stability • external stability • global and compound stability • limitations on rate of construction • settlement • horizontal deformation? • lateral earth pressures? • bearing capacity? • chemical compatibility with soil, groundwater, and wall materials? • pore pressures behind wall • borrow source evaluation (available quantity and quality of borrow soil) • liquefaction • potential for subsidence (karst, mining, etc.) • constructability • scour	• subsurface profile (soil, ground water, rock) • horizontal earth pressure coefficients • interface shear strengths • foundation soil/wall fill shear strengths? • compressibility parameters? (including consolidation, shrink/ swell potential, and elastic modulus) • chemical composition of fill/ foundation soils? • hydraulic conductivity of soils directly behind wall? • time-rate consolidation parameters? • geologic mapping including orientation and characteristics of rock discontinuities? • design flood elevations • seismicity	• SPT • CPT • dilatometer • vane shear • piezometers • test fill? • nuclear density? • pullout test (MSEW/ RSS) • rock coring (RQD) • geophysical testing	• 1-D Oedometer • triaxial tests • unconfined compression • direct shear tests • grain size distribution • Atterberg limits • specific gravity • pH, resistivity, chloride, and sulfate tests? • moisture content? • organic content • moisture-density relationships • hydraulic conductivity

Table 15-1 Summary of Information Needs and Testing Considerations

Geotechnical Issues	Engineering Evaluations	Required Information for Analyses	Field Testing	Laboratory Testing
Cut Walls	• internal stability • external stability • excavation stability • global and compound stability • dewatering • chemical compatibility of wall/soil • lateral earth pressure • down-drag on wall • pore pressures behind wall • obstructions in retained soil • liquefaction • see page • potential for subsidence (karst, mining, etc.) • constructability	• subsurface profile (soil, ground water, rock) • shear strength of soil • horizontal earth pressure coefficients • interface shear strength (soil and reinforcement) • hydraulic conductivity of soil • geologic mapping including orientation and characteristics of rock discontinuities • seismicity	• test cut to evaluate stand-up time • well pumping tests • piezometers • SPT • CPT • vane shear • dilatometer • pullout tests (anchors, nails) • geophysical testing	• triaxial tests • unconfined compression • direct shear • grain size distribution • Atterberg limits • specific gravity • pH, resistivity tests • organic content • hydraulic conductivity • moisture content • unit weight

15-3.3 Site Reconnaissance

For each abutment, retaining wall, and reinforced slope, the geotechnical designer should perform a site review and field reconnaissance. The geotechnical designer should be looking for specific site conditions that could influence design, construction, and performance of the retaining walls and reinforced slopes on the project. This type of review is best performed once survey data has been collected for the site and digital terrain models, cross-sections, and preliminary wall profiles have been generated by the civil engineer (e.g., region project engineer). In addition, the geotechnical designer should have access to detailed plan views showing existing site features, utilities, proposed construction, and right or way limits. With this information, the geotechnical designer can review the wall/slope locations making sure that survey information agrees reasonably well with observed site topography. The geotechnical designer should observe where utilities are located, as they will influence where field exploration can occur and they may affect design or constructability. The geotechnical designer should look for indications of soft soils or unstable ground. Items such as hummocky topography, seeps or springs, pistol butted trees, and scarps, either old or new, need to be investigated further. Vegetative indicators such as equisetum (horsetails), cat tails, black berry, or alder can be used to identify soils that are wet or unstable. A lack of vegetation can also be an indicator of recent slope movement. In addition to performing a basic assessment of site conditions, the geotechnical designer should also be looking for existing features that could influence design and construction such as nearby structures, surcharge loads, and steep back or toe slopes. This early in design, it is easy to overlook items such as

construction access, materials sources, and limits of excavation. The geotechnical designer needs to be cognizant of these issues and should be identifying access and excavation issues early, as they can affect permits and may dictate what wall type may or may not be used.

15-3.4 Field Exploration Requirements

A soil investigation and geotechnical reconnaissance is critical for the design of all abutments, retaining walls, or reinforced slopes. The stability of the underlying soils, their potential to settle under the imposed loads, the usability of any existing excavated soils for wall/reinforced slope backfill, and the location of the ground water table are determined through the geotechnical investigation. All abutments, retaining, walls and reinforced slopes regardless of their height require an investigation of the underlying soil/rock that supports the structure. Abutments shall be investigated like other bridge piers in accordance with Chapter 8.

Retaining walls and reinforced slopes that are equal to or less than 10 feet in exposed height, h_{exp}, as measured vertically from wall bottom to top or from slope toe to crest, as shown in Figure 15-1, shall be investigated in accordance with Sections 15-3.4.1 and 15.3.4.2. For all retaining walls and reinforced slopes greater than 10 feet in exposed height, the field exploration shall be completed in accordance with the AASHTO *LRFD Bridge Design Specifications* and this manual.

Figure 15-1 Exposed Height (H) for a Retaining Wall or Slope

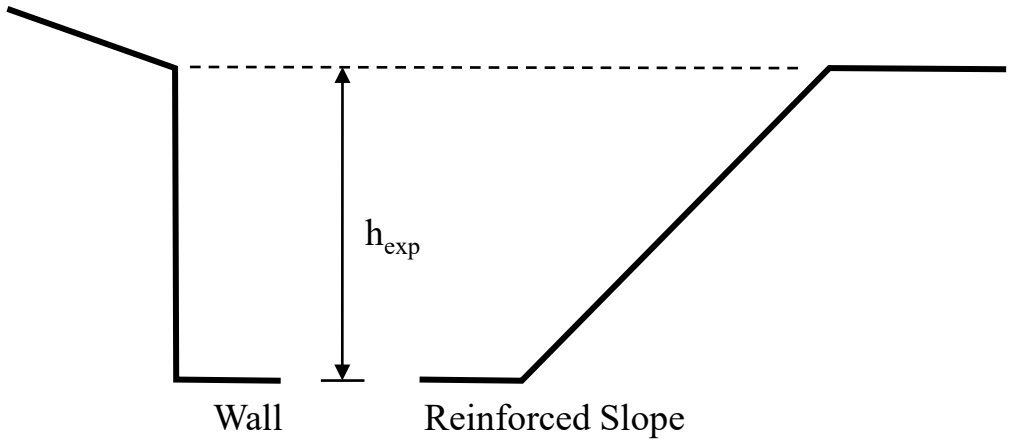

Explorations consisting of geotechnical borings, test pits, hand holes, or a combination thereof shall be performed at each wall or slope location. Geophysical testing may be used to supplement the subsurface exploration and reduce the requirements for borings. If the geophysical testing is done as a first phase in the exploration program, it can also be used to help develop the detailed plan for second phase exploration. As a minimum, the subsurface exploration and testing program should obtain information to analyze foundation stability and settlement with respect to:

- Geological formation(s).
- Location and thickness of soil and rock units.
- Engineering properties of soil and rock units, such as unit weight, shear strength and compressibility.

- Ground water conditions.
- Ground surface topography.
- Local considerations (e.g., liquefiable, expansive or dispersive soil deposits, underground voids from solution weathering or mining activity, or slope instability potential).

In areas underlain by heterogeneous soil deposits and/or rock formations, it will probably be necessary to perform more investigation to capture variations in soil and/ or rock type and to assess consistency across the site area. In a laterally homogeneous area, drilling or advancing a large number of borings may be redundant, since each sample tested would exhibit similar engineering properties. In all cases, it is necessary to understand how the design and construction of the geotechnical feature will affect the soil and/or rock mass in order to optimize the exploration. The following minimum guidelines for frequency and depth of exploration shall be used. Additional exploration may be required depending on the variability in site conditions, wall/slope geometry, wall/slope type, and the consequences should a failure occur.

15-3.4.1 *Exploration Type, Depth, and Spacing*

Generally, walls 10 feet or less in height, constructed over average to good soil conditions (e.g., non-liquefiable, medium dense to very dense sand, silt or gravel, with no signs of previous instability) will require only a basic level of site investigation. A geologic site reconnaissance (see Chapter 2), combined with widely spaced test pits, hand holes, or a few shallow borings to verify field observations and the anticipated site geology may be sufficient, especially if the geology of the area is well known, or if there is some prior experience in the area.

The geotechnical designer should investigate to a depth below bottom of wall or reinforced slope at least to a depth where stress increase due to estimated foundation load is less than 10 percent of the existing effective overburden stress and between one and two times the exposed height of the wall or slope. Exploration depth should be great enough to fully penetrate soft highly compressible soils (e.g., peat, organic silt, soft fine grained soils) into competent material of suitable bearing capacity (e.g., stiff to hard cohesive soil, compact dense cohesionless soil, or bedrock). Hand holes and test pits should be used only where medium dense to dense granular soil conditions are expected to be encountered within limits that can be reasonably explored using these methods, approximately 10 feet for hand holes and 15 feet for test pits, and that based on the site geology there is little risk of an unstable soft or weak layer being present that could affect wall stability.

For retaining walls and reinforced slopes less than 100 feet in length, the exploration should occur approximately midpoint along the alignment or where the maximum height occurs. Explorations should be completed on the alignment of the wall face or approximately midpoint along the reinforced slope, i.e., where the height, as defined in Figure 15-1, is 0.5H. Additional borings to investigate the toe slope for walls or the toe catch for reinforced slopes may be required to assess overall stability issues.

For retaining walls and slopes more than 100 feet in length, exploration points should in general be spaced at 100 to 200 feet, but may be spaced at up to 500 feet in uniform, dense soil conditions. Even closer spacing than 100 to 200 feet should be used in highly variable and potentially unstable soil conditions. Where possible, locate at least one boring where the maximum height occurs. Explorations should be completed on the alignment of the wall face or approximately midpoint along the reinforced slope, i.e., where the height is 0.5H. Additional borings to investigate the toe slope for walls or the toe catch for reinforced slopes may be required to assess overall stability issues. Exploration locations may be adjusted if geophysical testing conducted in accordance with Chapter 5 is done, provided enough borings are available to properly interpret the geophysical test results.

A key to the establishment of exploration frequency for walls is the potential for the subsurface conditions to impact the construction of the wall, the construction contract in general, and the long-term performance of the finished project. The exploration program should be developed and conducted in a manner that these potential problems, in terms of cost, time, and performance, are reduced to an acceptable level. The boring frequency described above may need to be adjusted by the geotechnical designer to address the risk of such problems for the specific project. Exploration locations may be adjusted if geophysical testing conducted in accordance with Chapter 5 is done, provided enough borings are available to properly interpret the geophysical test results.

15-3.4.2 *Walls and Slopes Requiring Additional Exploration*

15-3.4.2.1 *Soil Nail Walls*

Soil nail walls should have additional geotechnical borings completed to explore the soil conditions within the soil nail zone. The additional exploration points shall be at a distance of 1.0 to 1.5 times the height of the wall behind the wall to investigate the soils in the nail zone. For retaining walls and slopes more than 100 feet in length, exploration points should in general be spaced at 100 to 200 feet, but may be spaced at up to 500 feet in uniform, dense soil conditions. Even closer spacing than 100 to 200 feet should be used in highly variable and potentially unstable soil conditions. The depth of the borings shall be sufficient to explore the full depth of soils where nails are likely to be installed, and deep enough to address overall stability issues.

In addition, each soil nail wall should have at least one test pit excavated to evaluate stand-up time of the excavation face. The test pit shall be completed outside the nail pattern, but as close as practical to the wall face to investigate the stand-up time of the soils that will be exposed at the wall face during construction. The test pit shall remain open at least 24 hours and shall be monitored for sloughing, caving, and groundwater seepage. A test pit log shall be prepared and photographs should be taken immediately after excavation and at 24 hours. If variable soil conditions are present along the wall face, a test pit in each soil type should be completed. The depth of the test pits should be at least twice the vertical nail spacing and the length along the trench bottom should be at least one and a half times the excavation depth to minimize soil-arching effects. For example, a wall with a vertical nail spacing of 4 feet would have a test pit 8 feet deep and at least 12 feet in length at the bottom of the pit.

15-3.4.2.2 *Walls With Ground Anchors or Deadman Anchors*

Walls with ground anchors or deadman anchors should have additional geotechnical borings completed to explore the soil conditions within the anchor/deadman zone. For retaining walls more than 100 feet in length, exploration points should in general be spaced at 100 to 200 feet, but may be spaced at up to 500 feet in uniform, dense soil conditions. Even closer spacing than 100 to 200 feet should be used in highly variable and potentially unstable soil conditions. The borings should be completed outside the no-load zone of the wall in the bond zone of the anchors or at the deadman locations. The depth of the borings shall be sufficient to explore the full depth of soils where ground anchors or deadman anchors are likely to be installed, and deep enough to address overall stability issues.

15-3.4.2.3 *Wall or Slopes With Steep Back Slopes or Steep Toe Slopes*

Walls or slopes that have a back slopes or toe slopes that exceed 10 feet in slope length and that are steeper than 2H:1V should have at least one hand hole, test pit, or geotechnical boring in the backslope or toe slope to define stratigraphy for overall stability analysis and evaluate bearing resistance. The exploration should be deep enough to address overall stability issues. Hand holes and test pits should be used only where medium dense to dense granular soil conditions are expected to be encountered within limits that can be reasonably explored using these methods, approximately 10 feet for hand holes and 20 feet for test pits.

15-3.5 Field, Laboratory, and Geophysical Testing for Abutments, Retaining Walls, and Reinforced Slopes

The purpose of field and laboratory testing is to provide the basic data with which to classify soils and to estimate their engineering properties for design. Often for abutments, retaining walls, and reinforced slopes, the backfill material sources are not known or identified during the design process. For example, mechanically stabilized earth walls are commonly constructed of backfill material that is provided by the Contractor during construction. During design, the material source is not known and hence materials cannot be tested. In this case, it is necessary to design using commonly accepted values for regionally available materials and ensure that the contract will require the use of materials meeting or exceeding these assumed properties.

For abutments, the collection of soil samples and field testing shall be in accordance with chapters 2, 5, and 8.

For retaining walls and reinforced slopes, the collection of soil samples and field testing are closely related. Chapter 5 provides the minimum requirements for frequency of field tests that are to be performed in an exploration point. As a minimum, the following field tests shall be performed and soil samples shall be collected:

In geotechnical borings, soil samples shall be taken during the Standard Penetration Test (SPT). Fine grained soils or peat shall be sampled with 3-in Shelby tubes or WSDOT Undisturbed Samplers if the soils are too stiff to push 3-in Shelby tubes. All samples in geotechnical borings shall be in accordance with chapters 2 and 3.

In hand holes, sack soil samples shall be taken of each soil type encountered, and WSDOT Portable Penetrometer tests shall be taken in lieu of SPT tests. The maximum vertical spacing between portable penetrometer tests should be 5 feet.

In test pits, sack soil samples shall be taken from the bucket of the excavator, or from the spoil pile for each soil type encountered once the soil is removed from the pit. WSDOT Portable Penetrometer tests may be taken in the test pit. However, no person shall enter a test pit to sample or perform portable penetrometer tests unless there is a protective system in place in accordance with Washington Administrative Code (WAC) 296-155-657.

In soft soils, CPT tests or insitu vane shear tests may be completed to investigate soil stratigraphy, shear strength, and drainage characteristics.

All soil samples obtained shall be reviewed by a geotechnical engineer or engineering geologist. The geotechnical designer shall group the samples into stratigraphic units based on consistency, color, moisture content, engineering properties, and depositional environment. At least one sample from each stratigraphic unit should be tested in the laboratory for Grain Size Distribution, Moisture Content, and Atterberg limits. Additional tests, such as Loss on Ignition, pH, Resistivity, Sand Equivalent, or Hydrometer may be performed.

Walls that will be constructed on compressible or fine grained soils should have undisturbed soil samples available for laboratory testing, e.g., shelby tubes or WSDOT undisturbed samples. Consolidation tests and Unconsolidated Undrained (UU) triaxial tests should be performed on fine grained or compressible soil units. Additional tests such as Consolidated Undrained (CU), Direct Shear, or Lab Vane Shear may be performed to estimate shear strength parameters and compressibility characteristics of the soils.

Geophysical testing may be used for establishing stratification of the subsurface materials, the profile of the top of bedrock, depth to groundwater, limits of types of soil deposits, the presence of voids, anomalous deposits, buried pipes, and depths of existing foundations. Data from Geophysical testing shall always be correlated with information from direct methods of exploration, such as SPT, CPT, etc.

15-3.6 Groundwater

One of the principal goals of a good field reconnaissance and field exploration is to accurately characterize the groundwater in the project area. Groundwater affects the design, performance, and constructability of project elements. Installation of piezometer(s) and monitoring is usually necessary to define groundwater elevations. Groundwater measurements shall be conducted in accordance with Chapter 2, and shall be assessed for each wall. In general, this will require at least one groundwater measurement point for each wall. If groundwater has the potential to affect wall performance or to require special measures to address drainage to be implemented, more than one measurement point per wall will be required.

15-3.7 Wall Backfill Testing and Design Properties

The soil used as wall backfill may be tested for shear strength in lieu of using a lower bound value based on previous experience with the type of soil used as backfill (e.g., gravel borrow). See Chapter 5 (specifically Table 5-2) for guidance on selecting a shear strength value for design if soil specific testing is not conducted. A design shear strength value of 36° to 38° has been routinely used as a lower bound value for gravel borrow backfill for WSDOT wall projects. Triaxial tests conducted in accordance with AASHTO T296-95 (2000), but conducted on remolded specimens of the backfill compacted at optimum moisture content, plus or minus 3 percent, to 95 percent of maximum density per WSDOT Test Method T606, may be used to justify higher design friction angles for wall backfill, if the backfill source is known at the time of design. This degree of compaction is approximately equal to 90 to 95 percent of modified proctor density (ASTM D1557). The specimens are not saturated during shearing, but are left at the moisture content used during specimen preparation, to simulate the soil as it is actually placed in the wall. Note that this type of testing can also be conducted as part of the wall construction contract to verify a soil friction assumed for design.

Other typical soil design properties for various types of backfill and native soil units are provided in Chapter 5.

The ability of the wall backfill to drain water that infiltrates it from rain, snow melt, or ground water shall be considered in the design of the wall and its stability. Figure 15-2 illustrates the effect the percentage of fines can have on the permeability of the soil. In general, for a soil to be considered free draining, the fines content (i.e., particles passing the No. 200 sieve) should be less than 5 percent by weight. If the fines content is greater than this, the reinforced wall backfill cannot be fully depended upon to keep the reinforced wall backfill drained, and other drainage measures may be needed.

15-4 General Design Requirements

15-4.1 Design Methods

The AASHTO *LRFD Bridge Design Specifications* shall be used for all abutments and retaining walls addressed therein. The walls shall be designed to address all applicable limit states (strength, service, and extreme event). Rock walls, reinforced slopes, and soil nail walls are not specifically addressed in the AASHTO specifications, and shall be designed in accordance with this manual. Many of the FHWA manuals used as WSDOT design references were not developed for LRFD design. For those wall types (and including reinforced slopes) for which LRFD procedures are not available, allowable stress design procedures included in this manual, either in full or by reference, shall be used, again addressing all applicable limit states.

Figure 15-2 Permeability and Capillarity of Drainage Materials (Department of Defense 2005)

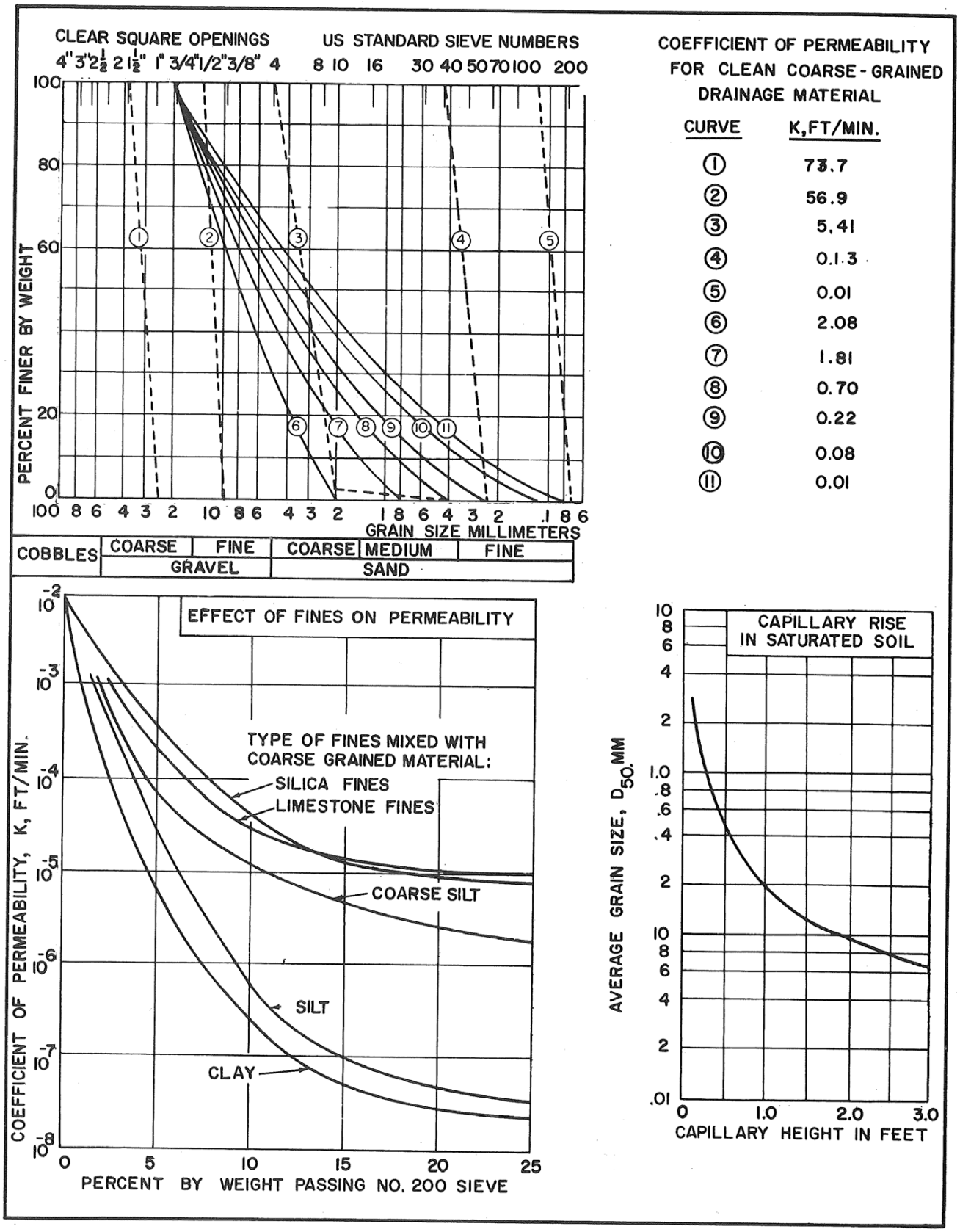

The load and resistance factors provided in the AASHTO LRFD Specifications have been developed in consideration of the inherent uncertainty and bias of the specified design methods and material properties, and the level of safety used to successfully construct thousands of walls over many years. These load and resistance factors shall only be applied to the design methods and material resistance estimation methods for which they are intended, if an option is provided in this manual or the AASHTO LRFD specifications to use methods other than those specified herein or in the AASHTO LRFD specifications. For estimation of soil reinforcement pullout in reinforced soil (MSE) walls, the resistance factors provided are to be used only for the default pullout methods provided in the AASHTO LRFD specifications. If wall system specific pullout resistance estimation methods are used, resistance factors shall be developed statistically using reliability theory to produce a probability of failure Pf of approximately 1 in 100 or smaller. Note that in some cases, Section 11 of the AASHTO *LRFD Bridge Design Specifications* refers to AASHTO LRFD Section 10 for wall foundation design and the resistance factors for foundation design. In such cases, the design methodology and resistance factors provided in the Chapter 8 shall be used instead of the resistance factors in AASHTO LRFD Section 10, where the GDM and the AASHTO Specifications differ.

For reinforced soil slopes, the FHWA manual entitled "Mechanically Stabilized Earth Walls and Reinforced Soil Slopes Design & Construction Guidelines" by Berg, et al. (2009), or most current version of that manual, shall be used as the basis for design. The LRFD approach has not been developed as yet for reinforced soil slopes. Therefore, allowable stress design shall be used for design of reinforced soil slopes.

All walls shall meet the requirements in the *Design Manual* M 22-01 for layout and geometry. All walls shall be designed and constructed in accordance with the *Standard Specifications*, General Special Provisions, and *Standard Plans*. Specific design requirements for tiered walls, back-to-back walls, and MSE wall supported abutments are provided in the GDM as well as in the AASHTO *LRFD Bridge Design Specifications*, and by reference in those design specifications to FHWA manuals (Berg, et al. 2009).

15-4.2 Tiered Walls

Walls that retain other walls or have walls as surcharges require special design to account for the surcharge loads from the upper wall. Proprietary wall systems may be used for the lower wall, but proprietary walls shall not be considered preapproved in this case. Chapter 730 of the *Design Manual* M 22-01 discusses the requirements for utilizing non-preapproved proprietary walls on WSDOT projects. If the upper wall is proprietary, a preapproved system may be used provided it meets the requirements for preapproval and does not contain significant structures or surcharges within the wall reinforcing.

For tiered walls, the FHWA manual entitled "Design and Construction of Mechanically Stabilized Earth Walls and Reinforced Soil Slopes" by Berg, et al. (2009), shall be used as the basis for design for those aspects of the design not covered in the AASHTO *LRFD Bridge Design Specifications* and the GDM.

15-4.3 Back-to-Back Walls

The face-to-face dimension for back-to-back sheetpile walls used as bulkheads for waterfront structures must exceed the maximum exposed height of the walls. Bulkhead walls may be cross braced or tied together provided the tie rods and connections are designed to carry twice the applied loads.

The face to face dimension for back to back Mechanically Stabilized Earth (MSE) walls should be 1.1 times the average height of the MSE walls or greater. Back-to- back MSE walls with a width/height ratio of less than 1.1 shall not be used unless approved by the State Geotechnical Engineer and the State Bridge Design Engineer. The maximum height for back-to-back MSE wall installations (i.e., average of the maximum heights of the two parallel walls) is 30 feet, again, unless a greater height is approved by the State Geotechnical Engineer and the State Bridge Design Engineer. Justification to be submitted to the State Geotechnical Engineer and the State Bridge Design Engineer for approval should include rigorous analyses such as would be conducted using a calibrated numerical model, addressing the force distribution in the walls for all limit states, and the potential deformations in the wall for service and extreme event limit states, including the potential for rocking of the back-to-back wall system.

The soil reinforcement for back-to-back MSE walls may be connected to both faces, i.e., continuous from one wall to the other, provided the reinforcing is designed for at least double the loading, if approved by the State Geotechnical Engineer. Reinforcement may overlap, provided the reinforcement from one wall does not contact the reinforcement from the other wall. Reinforcement overlaps of more than 3 feet are generally not desirable due to the increased cost of materials. Preapproved proprietary wall systems may be used for back-to-back MSE walls provided they meet the height, height/width ratio and overlap requirements specified herein. For seismic design of back-to-back walls in which the reinforcement layers overlap the walls may be considered able to slide to reduce the acceleration to be applied if both walls are free to slide. If the back-to-back walls are close enough together such that the active zones of the walls at least partially overlap, the inertial force of the walls shall be based on the total volume of both walls plus the retained soil between the walls.

For back-to-back walls, the FHWA manual entitled “Design and Construction of Mechanically Stabilized Earth Walls and Reinforced Soil Slopes” by Berg, et al. (2009), shall be used as the basis for design for those aspects of the design not covered in the AASHTO *LRFD Bridge Design Specifications* and the GDM.

15-4.4 Walls on Slopes

Standard Plan walls founded on slopes shall meet the requirements in the *Standard Plans*. Additionally, all walls shall have a near horizontal bench at the wall face at least 4 feet wide to provide access for maintenance. Bearing resistance for footings in slopes and overall stability requirements in the AASHTO *LRFD Bridge Design Specifications* shall be met. Table C11.10.2.2-1 in the AASHTO *LRFD Bridge Design Specifications* should be used as a starting point for determining the minimum wall face embedment when the wall is located on a slope. Use of a smaller embedment must be justified based on slope geometry, potential for removal of soil in front of the wall due to erosion, future construction activity, etc., and external and global wall stability considerations.

15-4.5 Minimum Embedment

All walls and abutments should meet the minimum embedment criteria in AASHTO. The final embedment depth required shall be based on geotechnical bearing and stability requirements provided in the AASHTO LRFD specifications, as determined by the geotechnical designer (see also Section 15-4.4). Walls that have a sloping ground line at the face of wall may need to have a sloping or stepped foundation to optimize the wall embedment. Sloping foundations (i.e., not stepped) shall be 6H:1V or flatter. Stepped foundations shall be 1.5H:1V or flatter determined by a line through the corners of the steps. The maximum feasible slope of stepped foundations for walls is controlled by the maximum acceptable stable slope for the soil in which the wall footing is placed. Concrete leveling pads constructed for MSE walls shall be sloped at 6H:1V or flatter or stepped at 1.5H:1V or flatter determined by a line through the corners of the steps. As MSE wall facing units are typically rectangular shapes, stepped leveling pads are preferred.

In situations where scour (e.g., due to wave or stream erosion) can occur in front of the wall, the wall foundation (e.g., MSE walls, footing supported walls), the pile cap for pile supported walls, and for walls that include some form of lagging or panel supported between vertical wall elements (e.g., soldier pile walls, tieback walls), the bottom of the footing, pile cap, panel, or lagging shall meet the minimum embedment requirements relative to the scour elevation in front of the wall. A minimum embedment below scour of 2 feet, unless a greater depth is otherwise specified, shall be used.

15-4.6 Wall Height Limitations

Proprietary wall systems that are preapproved through the WSDOT Bridge and Structures Office are in general preapproved to 33 feet or less in total height. Greater wall heights may be used and for many wall systems are feasible, but a special design (i.e., not preapproved) may be required. The 33 feet preapproved maximum wall height can be extended for proprietary wall systems if approved by the State Geotechnical and Bridge Design Engineers.

Some types of walls may have more stringent height limitations. Walls that have more stringent height limitations include full height propped precast concrete panel MSE walls (Section 15-5.3.7), flexible faced MSE walls with a vegetated face (Section 15-5.3.8), MSE wall supported bridge abutments (Section 15-5.3.6), and modular dry cast concrete block faced systems (Section 15-5.3.9). Other specific wall systems may also have more stringent height limitations due to specific aspects of their design or the materials used in their construction.

15-4.7 Serviceability Requirements

Walls shall be designed to structurally withstand the effects of total and differential settlement estimated for the project site, both longitudinally and in cross-section, as prescribed in the AASHTO LRFD Specifications. In addition to the requirements for serviceability provided above, the following criteria (tables 15-2, 15-3, and 15-4) shall be used to establish acceptable settlement criteria (includes settlement that occurs during and after wall construction):

Table 15-2 Settlement Criteria for Reinforced Concrete Walls, Nongravity Cantilever Walls, Anchored/Braced Walls, and MSE Walls With Full Height Precast Concrete Panels (Soil is Place Directly Against Panel)

Total Settlement	Differential Settlement Over 100 Feet	Action
$\Delta H \leq 1$ in	$\Delta H_{100} \leq 0.75$ in	Design and Construct
1 in $< \Delta H \leq 2.5$ in	0.75 in $< \Delta H_{100} \leq 2$ in	Ensure structure can tolerate settlement
$\Delta H > 2.5$ in	$\Delta H_{100} > 2$ in	Obtain Approval[1] prior to proceeding with design and Construction

[1]Approval of WSDOT State Geotechnical Engineer and WSDOT Bridge Design Engineer required.

Table 15-3 Settlement Criteria for MSE Walls With Modular (Segmental) Block Facings, Prefabricated Modular Walls, and Rock Walls

Total Settlement	Differential Settlement Over 100 Feet	Action
$\Delta H \leq 2$ in	$\Delta H_{100} \leq 1.5$ in	Design and Construct
2 in $< \Delta H \leq 4$ in	1.5 in $< \Delta H_{100} \leq 3$ in	Ensure structure can tolerate settlement
$\Delta H > 4$ in	$\Delta H_{100} > 3$ in	Obtain Approval[1] prior to proceeding with design and Construction
[1]Approval of WSDOT State Geotechnical Engineer and WSDOT Bridge Design Engineer required.		

Table 15-4 Settlement Criteria for MSE Walls With Flexible Facings and Reinforced Slopes, and Walls in Which the Structural Facing is Installed as a Second Construction Stage After the Wall Settlement is Complete

Total Settlement	Differential Settlement Over 50 Feet	Action
$\Delta H \leq 4$ in	$\Delta H_{50} \leq 3$ in	Design and Construct
4 in $< \Delta H \leq 12$ in	3 in $< \Delta H_{50} \leq 9$ in	Ensure structure can tolerate settlement
$\Delta H > 12$ in	$\Delta H_{50} > 9$ in	Obtain Approval[1] prior to proceeding with design and Construction

[1]Approval of WSDOT State Geotechnical Engineer and WSDOT Bridge Design Engineer required.

For two-stage walls, Table 15-4 settlement limits apply to the first stage. In that case, the effect of that settlement on installation of the second stage facing shall be addressed. For the second stage facing, long-term settlement shall be limited to the values shown in tables 15-2 and 15-3.

For MSE walls with precast panel facings up to 75 feet^2 in area, limiting differential settlements shall be as defined in the AASHTO LRFD Specifications, Article C11.10.4.1, and total settlement shall be 4 inches or less unless approval by the WSDOT State Geotechnical Engineer and WSDOT Bridge Design Engineer is obtained.

Note that more stringent tolerances than indicated in tables 15-2 to 15-4 may be necessary to meet aesthetic requirements for the walls.

15-4.8 Active, Passive, At-Rest Earth Pressures

The geotechnical designer shall assess soil conditions and shall develop earth pressure diagrams for all walls except standard plan walls in accordance with the AASHTO *LRFD Bridge Design Specifications*. Earth pressures may be based on either Coulomb or Rankine theories. The type of earth pressure used for design depends on the ability of the wall to yield in response to the earth loads. For walls that free to translate or rotate (i.e., flexible walls), active pressures shall be used in the retained soil. Flexible walls are further defined as being able to displace laterally at least 0.001H, where H is the height of the wall. Standard Plan reinforced concrete walls, Standard Plan Geosynthetic walls, MSE walls, soil nail walls, soldier pile walls and anchored walls are generally considered to be flexible retaining walls. Non-yielding walls shall use at-rest earth pressure parameters. Non-yielding walls include, for example, integral abutment walls, wall corners, cut and cover tunnel walls, and braced walls (i.e., walls that are cross-braced to another wall or structure). Where bridge wing and curtain walls join the bridge abutment, at rest earth pressures should be used. At distances away from the bridge abutment equal to or greater than the height of the abutment wall, active earth pressures may be used. This assumes that at such distances away from the bridge abutment, the wing or curtain wall can deflect enough to allow active conditions to develop.

If external bracing is used, active pressure may be used for design. For walls used to stabilize landslides, the applied earth pressure acting on the wall shall be estimated from limit equilibrium stability analysis of the slide and wall (external and global stability only). The earth pressure force shall be the force necessary to achieve stability in the slope, which may exceed at-rest or passive pressure.

Regarding the use of passive pressure for wall design and the establishment of its magnitude, the effect of wall deformation and soil creep should be considered, as described in the AASHTO *LRFD Bridge Design Specifications*, Article 3.11.1 and associated commentary. For passive pressure in front of the wall, the potential removal of soil due to scour, erosion, or future excavation in front of the wall shall be considered when estimating passive resistance.

15-4.9 Surcharge Loads

Article 3.11.6 in the AASHTO *LRFD Bridge Design Specifications* shall be used for surcharge loads acting on all retaining walls and abutments for walls in which the ground surface behind the wall is 4H:IV or flatter, the wall shall be designed for the possible presence of construction equipment loads immediately behind the wall. These construction loads shall be taken into account by applying a 250 psf live load surcharge to the ground surface immediately behind the wall. Since this is a temporary construction load, seismic loads should not be considered for this load case.

15-4.10 Seismic Earth Pressures

For seismic design of walls, the requirements in the AASHTO *LRFD Bridge Design Specifications* shall be met.

For free standing walls that are free to move during seismic loading, if it is desired to use a value of k_h that is less than 50 percent of A_s, such walls may be designed for a reduced seismic acceleration (i.e., yield acceleration) as specifically calculated in the AASHTO *LRFD Bridge Design Specifications*. The reduced (yield) acceleration should be determined using a wall displacement that is less than or equal to the following displacements:

- Structural gravity or semi-gravity walls – maximum horizontal displacement of 4 in.
- MSE walls – maximum horizontal displacement of 8 in.

These maximum allowed displacements do not apply to walls that support other structures, unless it is determined that the supported structures have the ability to tolerate the design displacement without compromising the required performance of the supported structure. These maximum allowed displacements also do not apply to walls that support utilities that cannot tolerate such movements and must function after the design seismic event or that support utilities that could pose a significant danger to the public of the utility ruptured. For walls that do support other structures, the maximum wall horizontal displacement allowed shall be no greater than the displacement that is acceptable for the structure supported by the wall.

These maximum allowed wall displacements also do not apply to non-gravity walls (e.g., soldier pile, anchored walls). A detailed structural analysis of non-gravity walls is required to assess how much they can deform laterally during the design seismic event, so that the appropriate value of k_h can be determined.

If fine grained soils are present behind the wall, the seismic earth pressure shall be determined accounting for the effect of earthquake shaking and displacement on the soil shear strength. For sensitive silts and clays (see also Section 6.4.3), the shear strength used to calculate the seismic earth pressure shall be reduced to account for the strength loss caused by the shaking. If over-consolidated cohesive soils (e.g., “Seattle Clays” as described in Section 5-13.3) are present behind the wall and the wall is designed to allow displacement, the residual drained friction angle rather than the peak friction angle in accordance with Chapter 5, should be used to determine the seismic lateral earth pressure. To justify a design shear strength greater than its residual value, a wall displacement analysis shall be conducted and shall demonstrate that the magnitude of the wall deflections allowed are too small to drop the shear strength to its residual value. See Chapter 5 for additional requirements regarding the shear strength issue, and Chapter 6 and the AASHTO *LRFD Bridge Design Specifications* for design methods and additional requirements to estimate the wall deflection.

Note that for the design methods typically used to estimate seismic earth pressure and which are specified in the GDM the slope of the active failure plane flattens as the earthquake acceleration increases. For anchored walls, the bonded zone of the anchors shall be located behind the active failure wedge. The methodology provided in FHWA Geotechnical Engineering Circular No. 4 (Sabatini et al., 1999) should be used to locate the active failure plane for the purpose of anchored zone location for anchored walls. If the anchors are needed to provide an acceptable level of safety for overall slope stability

during seismic loading, the bonded zone of the anchors shall be located behind the critical slope stability failure surface and the active zone behind the wall for seismic loading.

For walls that support other structures that are located over the active zone of the wall, the inertial force due to the mass of the supported structure shall be considered in the design of the wall if that structure can displace laterally with the wall during the seismic event. For supported structures that are only partially supported by the active zone of the wall, numerical modeling of the wall and supported structure should be considered to assess the impact of the supported structure inertial force on the wall stability.

15-4.11 Liquefaction

Under extreme event loading, liquefaction and lateral spreading may occur. The geotechnical designer shall assess liquefaction and lateral spreading for the site and identify these geologic hazards. Design to assess and to mitigate these geologic hazards shall be conducted in accordance with the provisions in Chapter 6.

For walls that retain liquefiable soils, and for which ground improvement is not feasible or cost effective to mitigate the liquefiable soils, the Generalized Limit Equilibrium (GLE) Method should be used to estimate the seismic active earth pressure as specified in the AASHTO *LRFD Bridge Design Manual*, specifically Article 11.6.5.3. Two analyses are required when a wall retains soil layers that may liquefy. These two analyses include: (1) a pseudo-static wall design as specified in Section 15-4.10, and (2) an analysis in which the soil has liquefied. For sites where more than 20 percent of the hazard contributing to the peak ground acceleration is from an earthquake with a magnitude of 7.5 or more (i.e., a long duration earthquake where there is potential for strong motion to occur after liquefaction has occurred), it should be assumed that the additional earth pressure behind the wall due to liquefaction occurs simultaneously with the earthquake ground motion.

In this case, k_h shall be as specified in the previous section (i.e., Section 15-4.10). For earthquakes in which the magnitude is less than 7.5, it can be assumed that $k_h = 0$ when the soil is liquefied.

When using the GLE Method to determine seismic earth pressure when the soil is liquefied, the liquefied shear strength shall be determined as a function of vertical effective stress such as shown in Figures 6-1, 6-3, and 6-4. Furthermore, for soils that liquefy but which have relatively high SPT blowcounts, it is possible that the seismic lateral earth pressure generated could be higher than the earth pressure generated when the soil has not liquefied. In such cases, the earth pressure generated when using liquefied soil shear strength shall be limited to be no less than the non-liquefied earth pressure.

Numerical, two dimensional effective stress methods may also be used to assess the earth pressure on retaining walls due to retained soil that contains liquefiable layers. The geotechnical designer shall provide documentation that their numerical model has been validated and calibrated with field data, centrifuge data, and/or extensive sensitivity analyses. Due to the highly specialized nature of these more sophisticated liquefaction assessment approaches, approval by the State Geotechnical Engineer is required to use nonlinear effective stress methods for liquefaction evaluation, and independent peer review as described in Section 6-3.3 shall be conducted.

15-4.12 Overall Stability

All retaining walls and reinforced slopes shall be designed for overall stability using Strength Limit State load groups, using a load factor of 1.0 for non-structural loads and shall have a resistance factor for overall stability of 0.75 (i.e., a safety factor of 1.3 as calculated using a limit equilibrium slope stability method). This resistance factor is not to be applied directly to the soil properties used to assess this mode of failure. If structural foundation loads are to be applied to the slope being analyzed (e.g., such as a bridge footing or retaining wall), the structural foundation loads shall be factored as a Strength Limit State load, and the resistance factor shall be no greater than 0.75. If Extreme Event loading is a factor (e.g., for earthquake loading), the load and resistance factors specified in the AASHTO *LRFD Bridge Design Specifications* shall be used.

It is important to check overall stability for surfaces that include the wall mass, as well as surfaces that check for stability of the soil below the wall, if the wall is located well above the toe of the slope. If the slope below the wall is determined to be potentially unstable, the wall stability should be evaluated assuming that the unstable slope material has moved away from the toe of the wall, if the slope below the wall is not stabilized. The slope above the wall, if one is present, should also be checked for overall stability.

Stability shall be assessed using limiting equilibrium methods in accordance with Chapter 7.

15-4.13 Wall Drainage

Drainage shall be provided for all walls when it is possible for water to build up behind the wall due to groundwater, stormwater infiltration, flooding, or due to tidal influence. In instances where wall drainage cannot be provided, the hydrostatic pressure from the water shall be included in the design of the wall. In general, wall drainage shall be in accordance with the *Standard Plans*, General Special Provisions. Figure 730-11 in the *Design Manual* M 22-01 shall be used for drain details and drain placement for all walls not covered by Standard Plan D-4 except as follows:

- Gabion walls and rock walls are generally considered permeable and do not typically require wall drains, provided construction geotextile is placed against the native soil or fill.
- Soil nail walls shall use composite drainage material centered between each column of nails. The drainage material shall be connected to weep holes using a drain gate or shall be wrapped around an underdrain.
- Cantilever and Anchored wall systems using lagging shall have composite drainage material attached to the lagging face prior to casting the permanent facing. Walls without facing or walls using precast panels are not required to use composite drainage material provided the water can pass through the lagging unhindered.
- For walls subject to periodic inundation due to tides or frequent flooding, additional drainage features shall be included with the wall to prevent or at least minimize the potential for rapid draw-down conditions, such as additional weep holes, chimney drains, etc., plus rapidly draining backfill as described in Section 15-3.7 below the level of inundation, if wall backfill is needed.

15-4.14 Utilities

Walls that have or may have future utilities in the backfill should minimize the use of soil reinforcement. MSE, soil nail, and anchored walls commonly have conflicts with utilities and should not be used when utilities must remain in the reinforced soil zone unless there is no other wall option. Utilities that are encapsulated by wall reinforcement may not be accessible for replacement or maintenance. Utility agreements should specifically address future access if wall reinforcing will affect access.

15-4.15 Guardrail and Barrier

Guardrail and barrier shall meet the requirements of the *Design Manual* M 22-01, *Bridge Design Manual*, *Standard Plans*, and the AASHTO *LRFD Bridge Design Specifications*. In no case shall guardrail posts be placed through MSE wall or reinforced slope soil reinforcement closer than 3 feet from the back of the wall facing elements. Furthermore, the guard rail posts shall be installed through the soil reinforcement in a manner that prevents ripping and distortion of the soil reinforcement, and the soil reinforcement shall be designed to account for the reduced cross-section resulting from the guardrail post holes.

For walls with a traffic barrier, the distribution of the applied impact load to the wall top shall be as described in the AASHTO *LRFD Bridge Design Specifications* Article 11.10.10.2 for LRFD designs unless otherwise specified in the *Bridge Design Manual*, except that for MSE walls, the impact load should be distributed into the soil reinforcement considering only the top two reinforcement layers below the traffic barrier to take the distributed impact load as described in NCHRP Report 663, Appendix I (Bligh, et al., 2010). See Figure 15-3 for an illustration of soil reinforcement load distributions for TL-3 and TL-4 loading. In that figure, p_d is the dynamic pressure distribution due to the traffic impact load that is to be resisted by the soil reinforcement, and p_s is the static earth pressure distribution, which is to be added to the dynamic pressure to determine the total soil reinforcement loading. For TL-5 loading, the soil reinforcement loads shown in the figure should be scaled up considering the magnitude of the impact load for TL-4 loading relative to the impact load for TL-5 loading.

Figure 15-3 MSE Wall Soil Reinforcement Design for Traffic Barrier Impact for TL-3 and TL-4 Loading (after Bligh, et al., 2010)

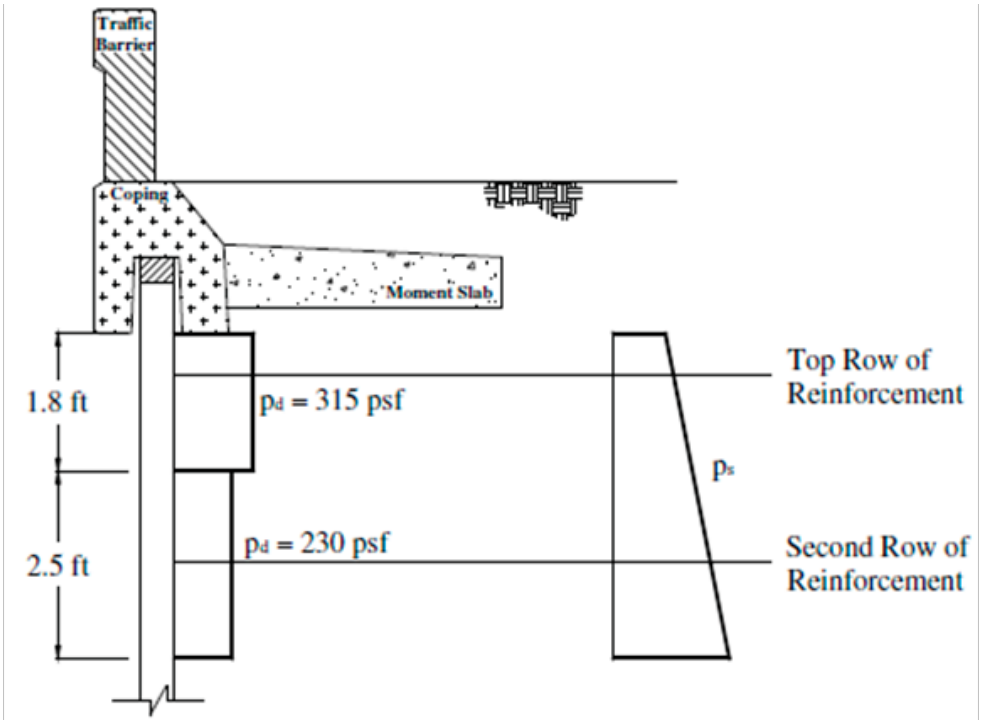

(a) Pressure distribution for reinforcement pullout

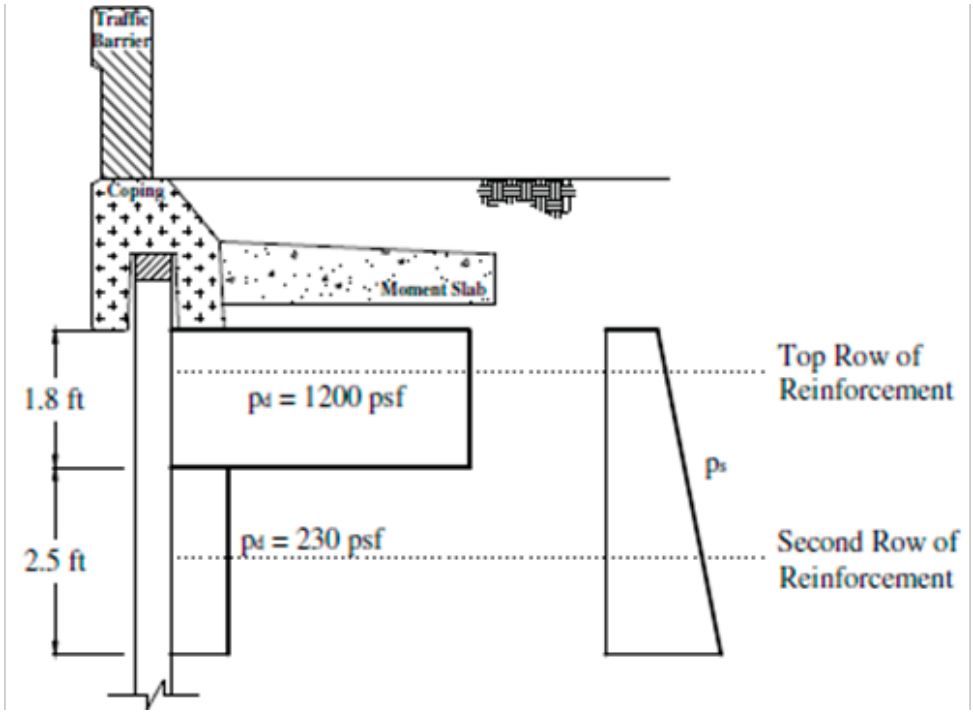

(b) Pressure distribution for reinforcement rupture.

15-5 Wall Type Specific Design Requirements

15-5.1 Abutments

Abutment foundations shall be designed in accordance with Chapter 8. Abutment walls, wingwalls, and curtain walls shall be designed in accordance with AASHTO *LRFD Bridge Design Specifications* and as specifically required in this GDM. Abutments that are backfilled prior to constructing the superstructure shall be designed using active earth pressures. Active earth pressures shall be used for abutments that are backfilled after construction of the superstructure, if the abutment can move sufficiently to develop active pressures. If the abutment is restrained, at-rest earth pressure shall be used. Abutments that are "U" shaped or that have curtain/wing walls should be designed to resist at-rest pressures in the corners, as the walls are constrained (see Section 15-4.8).

15-5.2 Nongravity Cantilever and Anchored Walls

WSDOT typically does not utilize sheet pile walls for permanent applications, except at Washington State Ferries (WSF) facilities. Sheet pile walls may be used at WSF facilities but shall not be used elsewhere without approval of the WSDOT Bridge Design Engineer. Sheet pile walls utilized for shoring or cofferdams shall be the responsibility of the Contractor and shall be approved on construction, unless the construction contract special provisions or plans state otherwise.

Permanent soldier piles for soldier pile and anchored walls should be installed in drilled holes. Impact or vibratory methods may be used to install temporary soldier piles, but installation in drilled holes is preferred.

Nongravity and Anchored walls shall be designed using the latest edition of the AASHTO *LRFD Bridge Design Specifications*. Key geotechnical design requirements for these types of walls are found in Sections 3 and 11 of the AASHTO LRFD specifications.

15-5.2.1 *Nongravity Cantilever Walls*

The exposed height of nongravity cantilever walls is generally controlled by acceptable deflections at the top of wall. In "good" soils, cantilever walls are generally 12 to 15 feet or less in height. Greater exposed heights can be achieved with increased section modulus or the use of secant/tangent piles. Nongravity cantilever walls using a single row of ground anchors or deadmen anchors shall be considered an anchored wall.

In general, the drilled hole for the soldier piles for nongravity cantilever walls will be filled with a relatively low strength flowable material such as controlled density fill (CDF), provided that water is not present in the drilled hole. Since CDF has a relatively low cement content, the cementitious material in the CDF has a tendency to wash out when placed through water. If the CDF becomes too weak because of this, the design assumption that the full width of the drilled hole, rather than the width of the soldier pile by itself, governs the development of the passive resistance in front of the wall will become invalid. The presence of groundwater will affect the choice of material specified by the structural designer to backfill the soldier pile holes, e.g., CDF if the hole is not wet, or higher strength concrete designed for tremie applications. Therefore, it is important that the geotechnical designer identify the potential for ground water in the drilled holes during design, as the geotechnical stability of a nongravity cantilever soldier pile wall is governed by the passive resistance available in front of the wall.

Typically, when discrete vertical elements are used to form the wall, it is assumed that due to soil arching, the passive resistance in front of the wall acts over three pile/shaft diameters. For typical site conditions, this assumption is reasonable. However, in very soft soils, that degree of soil arching may not occur, and a smaller number of pile diameters (e.g., 1 to 2 diameters) should be assumed for this passive resistance arching effect. For soldier piles placed in very dense soils, such as glacially consolidated till, when CDF is used, the strength of the CDF may be similar enough to the soil that the full shaft diameter may not be effective in mobilizing passive resistance. In that case, either full strength concrete should be used to fill the drilled hole, or only the width of the soldier pile should be considered effective in mobilizing passive resistance.

If the wall is being used to stabilize a deep seated landslide, in general, it should be assumed that full strength concrete will be used to backfill the soldier pile holes, as the shearing resistance of the concrete will be used to help resist the lateral forces caused by the landslide.

15-5.2.2 *Anchored/Braced Walls*

Anchored/braced walls generally consist of a vertical structural elements such as soldier piles or drilled shafts and lateral anchorage elements placed beside or through the vertical structural elements. Design of these walls shall be in accordance with the AASHTO *LRFD Bridge Design Specifications*.

In general, the drilled hole for the soldier piles for anchored/braced walls will be filled with a relatively low strength flowable material such as controlled density fill (CDF). For anchored walls, the passive resistance in front of the wall toe is not as critical for wall stability as is the case for nongravity cantilever walls. For anchored walls, resistance at the wall toe to prevent "kickout" is primarily a function of the structural bending resistance of the soldier pile itself. Therefore, it is not as critical that the CDF maintain its full shear strength during and after placement if the hole is wet. For anchored/braced walls, the only time full strength concrete would be used to fill the soldier pile holes in the buried portion of the wall is when the anchors are steeply dipping, resulting in relatively high vertical loads, or for the case when additional shear strength is needed to resist high lateral kickout loads resulting from deep seated landslides. In the case of walls used to stabilize deep seated landslides, the geotechnical designer must clearly indicate to the structural designer whether or not the shear resistance of the soldier pile and cementitious backfill material (i.e., full strength concrete) must be considered as part of the resistance needed to help stabilize the landslide.

15-5.2.3 *Permanent Ground Anchors*

The geotechnical designer shall define the no-load zone for anchors in accordance with the AASHTO *LRFD Bridge Design Specifications*. If the ground anchors are installed through landslide material or material that could potentially be unstable, the no load zone shall include the entire unstable zone as defined by the actual or potential failure surface plus 5 feet minimum. The contract documents should require the drill hole in the no load zone to be backfilled with a non-structural filler. Contractors may request to fill the drill hole in the no load zone with grout prior to testing and acceptance of the anchor. This is usually acceptable provided bond breakers are present on the strands, the anchor unbonded length is increased by 8 feet minimum, and the grout in the unbonded zone is not placed by pressure grouting methods.

The geotechnical designer shall determine the factored anchor pullout resistance that can be reasonably used in the structural design given the soil conditions. The ground anchors used on the projects shall be designed by the Contractor. Compression anchors (see Sabatini, et al., 1999) may be used, but conventional anchors are preferred by WSDOT.

The geotechnical designer shall estimate the nominal anchor bond stress (t_n) for the soil conditions and common anchor grouting methods. AASHTO *LRFD Bridge Design Specifications* and the FHWA publications listed at the beginning of this chapter provide guidance on acceptable values to use for various types of soil and rock. The geotechnical designer shall then apply a resistance factor to the nominal bond stress to determine a feasible factored pullout resistance (FPR) for anchors to be used in the wall. In general, a 5-in diameter low pressure grouted anchor with a bond length of 15 to 30 feet should be assumed when estimating the feasible anchor resistance. FHWA research has indicated that anchor bond lengths greater than 40 feet are not fully effective. Anchor bond lengths greater than 50 feet shall be approved by the State Geotechnical Engineer.

The structural designer shall use the factored pullout resistance to determine the number of anchors required to resist the factored loads. The structural designer shall also use this value in the contract documents as the required anchor resistance that Contractor needs to achieve. The Contractor will design the anchor bond zone to provide the specified resistance. The Contractor will be responsible for determining the actual length of the bond zone, hole diameter, drilling methods, and grouting method used for the anchors.

All ground anchors shall be proof tested, except for anchors that are subjected to performance tests. A minimum of 5 percent of the wall's anchors shall be performance tested. For ground anchors in clays, or other soils that are known to be potentially problematic, especially with regard to creep, at least one verification test shall be performed in each soil type within the anchor zone. Past WSDOT practice has been to perform verification tests at two times the design load with proof and performance tests loaded to 1.5 times the design load. National practice has been to test to 1.33 times the design load for proof and performance tests. Historically, WSDOT has utilized a higher safety factor in its anchored wall designs (FS=1.5) principally due to past performance with anchors constructed in Seattle Clay. For anchors that are installed in Seattle Clay, other similar formations, and clays in general, the level of safety obtained in past WSDOT practice shall continue to be used (i.e., FS = 1.5). Detailed testing and acceptance protocols, based on recommendations by Allen (2020), that shall be followed for tiebacks installed in clays are provided in Appendix 15-G. The recommended protocols for tiebacks in clay provided in Allen (2020) and in Appendix 15-G were primarily developed for straight-shafted, low pressure grouted tiebacks. Application of these criteria to pressure and post- grouted tiebacks may be considered, subject to approval by the State Geotechnical Engineer. For anchors in other soils (e.g., sands, gravels, glacial tills), the level of safety obtained when applying the national practice (i.e., FS = 1.33) should be used.

The AASHTO *LRFD Bridge Design Specifications* specifically addresses anchor testing. The AASHTO specifications recommend that the test loads used in past allowable stress design practice be reduced by the load factor applicable to the limit state that controls the maximum factored design load for the anchor. For the strength limit state, a load factor γ_{EH} of 1.35 is typically applied to the lateral earth pressure acting on the wall. If the seismic design (i.e., Extreme Event I) controls the factored load acting on the anchor, then the load factor is only 1.0. However, due to the extreme nature of the loading for this limit

state, the extra margin of safety used to design in the strength limit state is not needed for the seismic load case, as past allowable stress design practice used a FS of 1.0.

To be consistent with previous WSDOT practice, for the Strength Limit State, verification tests, if conducted, shall be performed to 1.5 times the factored design load (FDL) for the anchor. Proof and performance tests shall be performed to 1.15 times the factored design load (FDL) for anchors installed in clays, and to 1.00 times the factored design load (FDL) for anchors in other soils and rock. The geotechnical designer should make the decision during design as to whether or not a higher test load is required for anchors in a portion of, or all of, the wall due to the presence of clays or other problematic soils. These proof, performance, and verification test loads assume that a load factor, γ_{EH}, of 1.35 is applied to the apparent earth pressure used to design the anchored wall. If the Extreme Event I limit state controls the design, the same loading sequence and magnitude as used for the strength limit state should be used for all anchor tests.

The following shall be used for verification tests:

Strength Limit State Controls	
Load	**Hold Time**
AL	1 Min.
0.25FDL	10 Min.
0.50FDL	10 Min.
0.75FDL	10 Min.
1.00FDL	10 Min.
1.15FDL	**60 Min.**
1.25FDL	10 Min.
1.50FDL	10 Min.
AL	1 Min.

AL is the alignment load. The test load shall be applied in increments of 25 percent of the factored design load. Each load increment shall be held for at least 10 minutes. Measurement of anchor movement shall be obtained at each load increment. The load-hold period shall start as soon as the test load is applied and the anchor movement, with respect to a fixed reference, shall be measured and recorded at 1 minute, 2, 3, 4, 5, 6, 10, 15, 20, 25, 30, 45, and 60 minutes.

The following shall be used for proof tests, for anchors in clay or other creep susceptible or otherwise problematic soils or rock:

Strength Limit State Controls	
Load	**Hold Time**
AL	1 Min.
0.25FDL	1 Min.
0.50FDL	1 Min.
0.75FDL	1 Min.
1.00FDL	1 Min.
1.15FDL	**10 Min.**
AL	1 Min.

The following shall be used for proof tests, for anchors in sands, gravels, glacial tills, rock, or other materials where creep is not likely to be a significant issue:

Strength Limit State Controls	
Load	**Hold Time**
AL	1 Min.
0.25FDL	1 Min.
0.50FDL	1 Min.
0.75FDL	1 Min.
1.00FDL	**10 Min.**
AL	1 Min.

The maximum test load in a proof test shall be held for ten minutes, and shall be measured and recorded at 1 minute, 2, 3, 4, 5, 6, and 10 minutes. If the anchor movement between one minute and ten minutes exceeds 0.04 in, the maximum test load shall be held for an additional 50 minutes. If the load hold is extended, the anchor movements shall be recorded at 15, 20, 25, 30, 45, and 60 minutes.

Performance tests cycle the load applied to the anchor. Between load cycles, the anchor is returned to the alignment load (AL) before beginning the next load cycle. The following shall be used for performance tests:

Cycle 1	Cycle 2	Cycle 3	Cycle 4	Cycle 5*	Cycle 6
AL	AL	AL	AL	AL	AL
0.25FDL	0.25FDL	0.25FDL	0.25FDL	0.25FDL	Lock-off
	0.50FDL	0.50FDL	0.50FDL	0.50FDL	
		0.75FDL	0.75FDL	0.75FDL	
			1.00FDL	1.00FDL	
				1.15FDL	

*The fifth cycle shall be conducted if the anchor is installed in clay or other problematic soils. Otherwise, the load hold is conducted at 1.00FDL and the fifth cycle is eliminated.

The load shall be raised from one increment to another immediately after a deflection reading. The maximum test load in a performance test shall be held for 10 minutes. If the anchor movement between one minute and 10 minutes exceeds 0.04 inch, the maximum test load shall be held for an additional 50 minutes. If the load hold is extended, the anchor movements shall be recorded at 15, 20, 25, 30, 45, and 60 minutes. After the final load hold, the anchor shall be unstressed to the alignment load then jacked to the lock-off load.

The structural designer should specify the lock-off load in the contract. Past WSDOT practice has been to lock-off at 80 percent of the anchor design load. Because the factored design load for the anchor is higher than the “design load” used in past practice, locking off at 80 percent would result in higher tendon loads. To match previous practice, the lock-off load for all permanent ground anchors shall be 60 percent of the factored design load for the anchor. This applies to both the Strength and Extreme Event limit states.

Since the contractor designs and installs the anchor, the contract documents should require the following:

1. Lock off shall not exceed 70 percent of the specified minimum tensile strength for the anchor.
2. Test loads shall not exceed 80 percent of the specified minimum tensile strength for the anchor.
3. All anchors shall be double corrosion protected (encapsulated). Epoxy coated or bare strands shall not be used unless the wall is temporary.
4. Ground anchor installation angle should be 15 to 30 degrees from horizontal, but may be as steep as 45 degrees to install anchors in competent materials or below failure planes.

The geotechnical designer and the structural designer should develop the construction plans and special provisions to ensure that the contractor complies with these requirements.

15-5.2.4 *Deadmen*

The geotechnical designer shall develop earth pressures and passive resistance for deadmen in accordance with AASHTO *LRFD Bridge Design Specifications*. Deadmen shall be located in accordance with Figure 20 from NAVFAC DM-7.2, Foundations and Earth Structures, May 1982 (reproduced below for convenience in Figure 15-4).

Figure 15-4 Deadman Anchor Design (After NAVFAC, 1982)

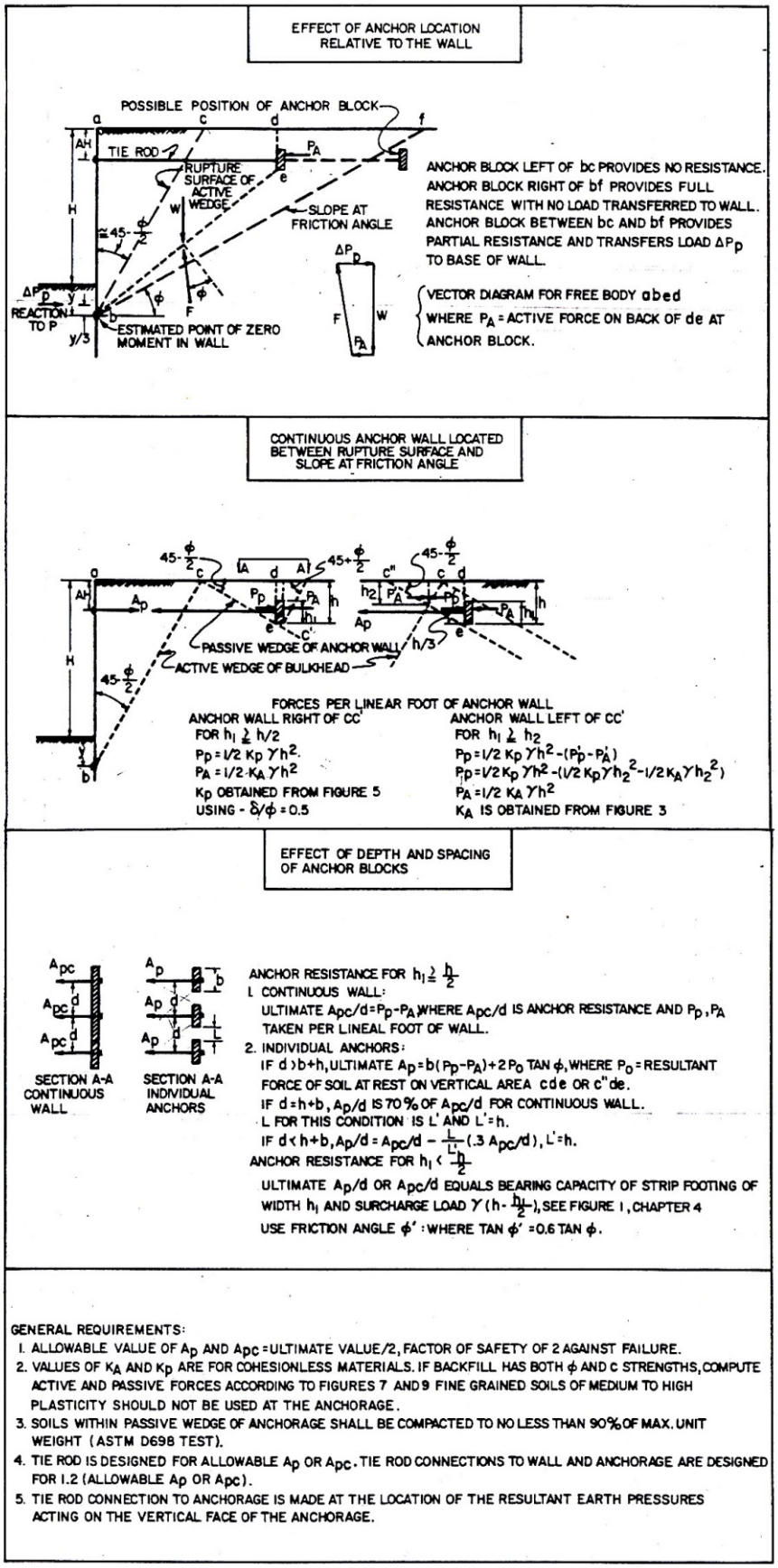

15-5.3 Mechanically Stabilized Earth Walls

Wall design shall be in accordance with the AASHTO *LRFD Bridge Design Specifications*, except as noted below.

With regard to internal stability design of MSE walls, three methods for estimating the design soil reinforcement loads (T_{max}) are available. They include the Simplified Method, the Coherent Gravity Method, and the Simplified Stiffness Method (hereinafter referred to as the Stiffness Method). The Simplified and Coherent Gravity methods have been in use for many years and are currently included in the AASHTO *LRFD Bridge Design Specifications*. The Stiffness Method, developed by Allen and Bathurst (2015, 2018), is newer than the other two methods. While each method started from different "theoretical" assumptions, all three methods have been empirically developed from measurements made during wall operational conditions. It is therefore important that these methods be applied to design situations that are within the range of the case history data used to develop them. For insights as to the range of the design situations applicable to the Coherent Gravity Method, see Schlosser (1978), Schlosser and Segrestin (1979), and Allen et al. (2001). Likewise, for the Simplified Method, see Allen et al. (2001). Finally, for the Stiffness Method, see Allen and Bathurst (2015, 2018). If any of these methods must be used for situations that are significantly beyond their empirical basis (e.g., for walls placed on soft compressible soil), additional evaluations should be conducted. Of the three methods, the Stiffness Method has the broadest empirical basis. However, the Stiffness Method has not been as widely used yet relative to the other two methods for new wall designs, especially for steel reinforced structures.

The Stiffness Method is in general less conservative, but more accurate, than the other two methods. For this reason, the load and resistance factors provided in the current AASHTO *LRFD Bridge Design Specifications* (2017), which are based on levels of safety used in previous long-term design practice, are not directly applicable to the Stiffness Method, requiring that the Stiffness Method be calibrated using reliability theory to achieve the target minimum reliability (see Allen et al. 2005). Therefore, the calibrated load and resistance factors provided in Section 15-5.3.10.2 for the Stiffness Method shall be used.

Note that load and resistance factors are not provided for the Stiffness Method in Section 15-5.3.10.2 for MSE walls with steel (i.e., inextensible) reinforcement. Calibration of the Stiffness Method load and resistance factors for steel reinforced systems are still in progress and therefore are not available at the time of this update. Until that calibration work is complete, the Stiffness Method is only approved for routine use for MSE walls with extensible reinforcement. This method may be used for steel reinforced MSE walls only if the reinforcement layers are instrumented such that the reinforcement loads are measured, subject to approval by the State Geotechnical Engineer. However, the Coherent Gravity and Simplified methods, using the load and resistance factors provided in the AASHTO *LRFD Bridge Design Manual*, should be used for inextensible steel reinforced MSE walls, considering long-term successful design practice.

These MSE wall design procedures assume that inextensible reinforcements are not mixed with extensible reinforcements within the same wall. Therefore, MSE walls shall not contain a mixture of inextensible and extensible reinforcements.

15-5.3.1 *Soil Reinforcement Spacing Considerations*

For uniform vertical spacing of soil reinforcement, S_v, the tributary layer thickness, is equal to the vertical spacing of the reinforcement. For nonuniform vertical spacing of soil reinforcement, S_v shall be taken as shown in Figure 15-5.

Figure 15-5 Determination of the tributary layer thickness, S_v

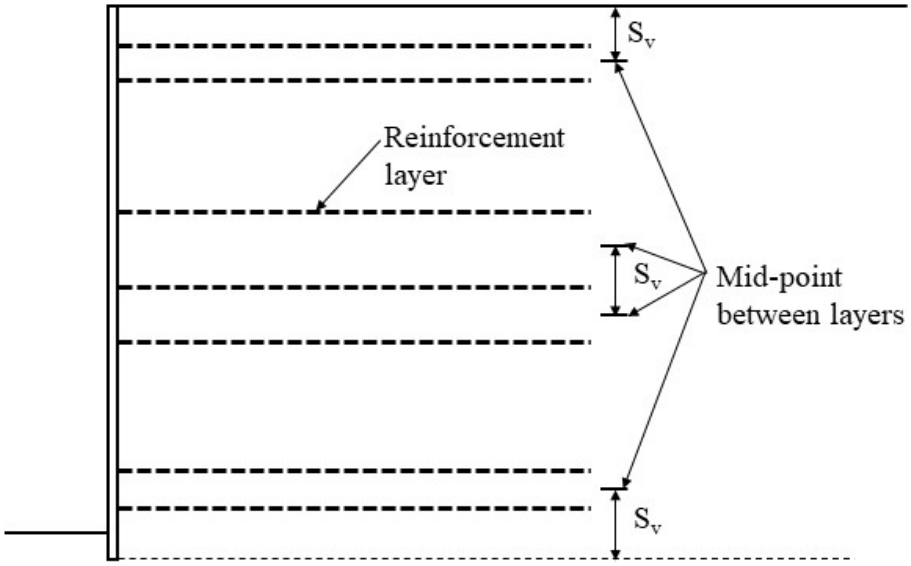

The design procedures provided herein assume that the wall facing combined with the reinforced backfill acts as a coherent unit to form a gravity retaining structure. The effect of relatively large vertical spacing of reinforcement on this assumption is not well known and a vertical spacing greater than 2.7 feet should not be used without full scale wall data (e.g., reinforcement loads and strains, and overall deflections) that support the acceptability of larger vertical spacing. However, for MSE wall systems with facing units equal to or greater than 2.7 ft high with a minimum facing unit width, W_u, equal to or greater than the facing unit height, the maximum spacing, S_v, shall not exceed the width of the facing unit, W_u, or 3.3 ft, whichever is less. See Allen and Bathurst (2003, 2018) for results from and analysis of case history data regarding this issue. It is also important to recognize that large vertical spacing of reinforcement can result in excessive facing deflection, both localized and global, which could in turn cause localized elevated stresses in the facing and its connection to the soil reinforcement, especially for walls with flexible facing. Center-to-center horizontal spacing of reinforcement elements should not exceed 3.3 ft for walls with rigid facing panels. For walls with flexible facing panels, horizontal gaps between soil reinforcement elements should not exceed 1.5 ft.

Horizontal spacings as large as 3.3 ft have been used in typical design and construction practice for MSE walls. Back-analysis of instrumented MSE walls indicates that reinforcement load prediction accuracy is not adversely compromised with horizontal spacing of this magnitude when the reinforcement elements are directly attached to rigid facings such as precast concrete panels. However, for flexible facings such as welded wire, large horizontal spacing of the reinforcement has be shown to cause poor wall performance and therefore should not be used for walls with flexible facing. For flexibly faced walls, even a gap of 1.5 ft between reinforcement elements can result in excessive deformation of the facing elements. Therefore, if horizontal gaps of this magnitude are used, the effect of the gaps on the facing panel deformation should be investigated.

15-5.3.2 Live Load Considerations for MSE Walls

The AASHTO design specifications allow traffic live load to not be specifically considered for pullout design (note that this does not apply to traffic barrier impact load design as discussed above). The concept behind this is that for the most common situations, it is unlikely that the traffic wheel paths will be wholly contained within the active zone of the wall, meaning that one of the wheel paths will be over the reinforcement resistant zone while the other wheel path is over the active zone. However, there are cases where traffic live load could be wholly contained within the active zone.

Therefore, include live load in calculation of T_{max}, where T_{max} is as defined in the AASHTO *LRFD Bridge Design Specifications* (i.e., the calculated maximum load in each reinforcement layer), for pullout design if it is possible for both wheels of a vehicle to drive over the wall active zone at the same time, or if a special live loading condition is likely (e.g., a very heavy vehicle could load up the active zone without having a wheel directly over the reinforcement in the resistant zone). Otherwise, live load does not need to be considered. For example, with a minimum 2 feet shoulder and a minimum vehicle width of 8 feet, the active zone for steel reinforced walls would be wide enough for this to happen only if the wall is over 30 feet high, and for geosynthetic walls over 22 feet high. For walls of greater height, live load would need to be considered for pullout for the typical traffic loading situation.

15-5.3.3 Backfill Considerations for MSE Walls

For steel reinforced MSE walls, the design soil friction angle for the backfill shall not be greater than 40° even if soil specific shear strength testing is conducted, as research conducted to date indicates that measured reinforcement loads do not continue to decrease as the soil shear strength increases (Bathurst, et al., 2009, Allen and Bathurst 2015 and 2018). For geosynthetic MSE walls, however, the load in the soil reinforcement does appear to be correlated to soil shear strength even for shear strength values greater than 40° (see Allen, et al., 2003 and Bathurst, et al., 2008). A maximum design friction angle of 40° should also be used for geosynthetic reinforced walls even with backfill specific shear strength testing, unless project specific approval is obtained from the WSDOT State Geotechnical Engineer to exceed 40°. If backfill shear strength testing is conducted, it shall be conducted in accordance with Section 15-3.7.

In general, low silt content backfill materials such as Gravel Borrow per the WSDOT *Standard Specifications* should be used for MSE walls. If higher silt content soils are used as wall backfill, the wall should be designed using only the frictional component of the backfill soil shear strength as discussed in Section 15-3.7. Other issues that shall be addressed if higher fines content soils are used are as follows:

- **Ability to place and compact the soil, especially during or after inclement weather** – In general, as the fines content increases and the soil becomes more well graded, water that gets into the wall backfill due to rain, surface water flow, or ground water flow can cause the backfill to “pump” during placement and compaction, preventing the wall backfill from being properly compacted. Even some gravel borrow gradations may be susceptible to pumping problems when wet, especially when the fines content is greater than 5 percent. Excessive wall face deformation during wall construction can also occur in this case. Because of this potential problem, higher silt content wall backfill should only be used during extended periods of dry weather, such as typically

occurs in the summer and early fall months in Western Washington, and possibly most of the year in at least some parts of Eastern Washington.

- **For steel reinforced wall systems, the effect of the higher fines content on corrosion rate of the steel reinforcement** – General practice nationally is that use of backfill with up to 15 percent silt content is acceptable for steel reinforced systems (AASHTO, 2010; Berg, et al., 2009). If higher silt content soils are used, elevated corrosion rates for the steel reinforcement should be considered (see Elias, et al., 2009).
- **Prevention of water or moisture build-up in the wall reinforced backfill** – When the fines content is greater than 5 percent, the material should not be considered to be free draining (see Section 15-3.7). In such cases where the fines content is greater than that allowed in the WSDOT gravel borrow specification (i.e., greater than 7 percent), special measures to prevent water from entering the reinforced backfill shall be implemented. This includes placement of under-drains at the back of the reinforced soil zone, sheet drains to intercept possible ground and rainwater infiltration flow, and use of some type impermeable barrier over the top of the reinforced soil zone.
- **Potential for long-term lateral and vertical deformation of the wall due to soil creep, or in general as cohesive soil shear strength is lost over the life of the wall** – Strain and load increase with time in a steel reinforced soil wall was observed for a large wall in California, a likely consequence of using a backfill soil with a significant cohesion component (Allen, et al., 2001). The Stiffness Method (see Section 15-5.3.10.1, especially Table 15-E-2 in Appendix 15-E) may be used to estimate the reinforcement strain increase caused by loss of cohesive shear strength over time (i.e., estimate the reinforcement strain using the c-ϕ shear strength at end of construction, and subtract that from the reinforcement strain estimated using only the frictional component of that shear strength for design to get the long-term strain). This would give an indication of the long-term wall deformation that could occur.

15-5.3.4 *Compound Stability Assessment for MSE Walls*

If the MSE wall is located over a soft foundation soil, sloping ground above or below the wall, on or adjacent to unstable ground due to landslides, the wall is a combination of two or more tiers, or the wall supports foundation loads, compound stability of the wall shall be evaluated for the Strength Limit State and as applicable the Extreme Event Limit State in accordance with Section 15-4.12. It is recommended that this stability evaluation only be used to evaluate surfaces that intersect within the bottom 20 to 30 percent of the reinforcement layers. As discussed by Allen and Bathurst (2002) and Allen and Bathurst (2018), available limit equilibrium approaches such as the ones typically used to evaluate slope stability do not work well for internal stability of reinforced soil structures, resulting in excessively conservative designs, at least for geosynthetic or otherwise extensible reinforced systems, and resulting in unconservative designs for steel or otherwise inextensible reinforced systems.

Limit equilibrium analyses (LEA) shall be used to evaluate compound stability. The long-term strength of each backfill reinforcement layer intersected by the failure surface should be considered as resisting forces in the limit equilibrium slope stability analysis.

To perform a LEA for compound stability, three analysis steps are conducted, which are as follows:

- Estimate the nominal load in each reinforcement layer, T_{max}, targeting a load and resistance factor combination of 1.0.
- Adjust the reinforcement spacing and strength required to meet the limit states as specified in sections 15-5.3.10.3.2 and 15-5.3.10.3.3 for each reinforcement layer using factored load and resistance values. Load factors shall be as specified in the AASHTO *LRFD Bridge Design Specifications*, Table 3.4.1-1 and 3.4.1-2, and resistance factors as specified in AASHTO *LRFD Bridge Design Specifications* Table 11.5.7-1, except for the Stiffness Method, in which the load and resistance factors are as specified in GDM Section 15-5.3.10.1, Table 15-5.
- Check the factored design using LEA with factored load and resistance values.

When additional surcharge loads, such as a structure footing load or live load, are applied to the top of the reinforced zone of the MSE wall, for Step 3, they shall be factored as specified in the AASHTO *LRFD Bridge Design Manual*, Article 3.4.1 for the Strength I limit state.

Development of LEA for MSE wall design is summarized in Leshchinsky et al. (2016, 2017). LEA, using either a log spiral or circular failure surface, is described by Vahedifard et al. (2014, 2016) and Leshchinsky et al. (2016, 2017). It is also possible to conduct the LEA using conventional slope stability computer software in which the tensile inclusions provide resistance to slope instability.The results of the compound stability analysis, if it controls the reinforcement needs near the base of the wall, should be expressed as minimum total reinforcement strength and total reinforcement pullout resistance for all layers within a “box” at the base of the wall to meet compound stability requirements. The location of the critical compound stability failure surface in the bottom portion of the wall should also be provided so that the resistant zone boundary location is identified.

Regarding pullout, the length of reinforcement needed behind the critical compound stability failure surface may vary significantly depending on the reinforcement coverage ratio anticipated and the frictional characteristics of the soil reinforcement. Therefore, several scenarios for these two key variables may need to be investigated to assure it is feasible to obtain the desired level of compound stability for all wall/ reinforcement types that are to be considered for the selected width “B” of the box. For convenience, to define the box width “B” required for the pullout length, an average active and resistant zone length should be defined for the box. This concept is illustrated in Figure 15-6. In this figure “H” is the total wall height, “T” is the load required in each reinforcement layer that must be resisted to achieve the desired level of safety in the wall for compound stability (Section 15-4.12 applies for compound stability with regard to the slope stability safety factor needed), and T_{total} is the total force increase needed in the compound stability analysis to achieve the desired level of safety with regard to compound stability. This total force should be less than or equal to the total long-term tensile strength, T_{al}, of the reinforcement layers within the defined “box” and the total pullout resistance available for the reinforcement contained within the box, considering factored loads and resistance values. The engineer needs to select the value of “B” that meets this pullout length requirement. However, the value of “B” selected should be minimized to keep the wall base width required to a minimum, to keep excavation needs as small as possible.

From the wall supplier's view, the contract would specify a specific value of "B" that is long enough such that the desired minimum pullout resistance can be obtained but that provides a consistent basis for bidding purposes with regard to the amount of excavation and shoring needed to build the wall.

Note that for taller walls, it may be desirable to define more than one box at the wall base to improve the accuracy of the pullout length for the intersected reinforcement layers. If the wall is tiered, a box may need to be provided at the base of each tier, depending on the horizontal separation between tiers.

Figure 15-6 Compound Stability Assessment Concept for MSE Wall Design

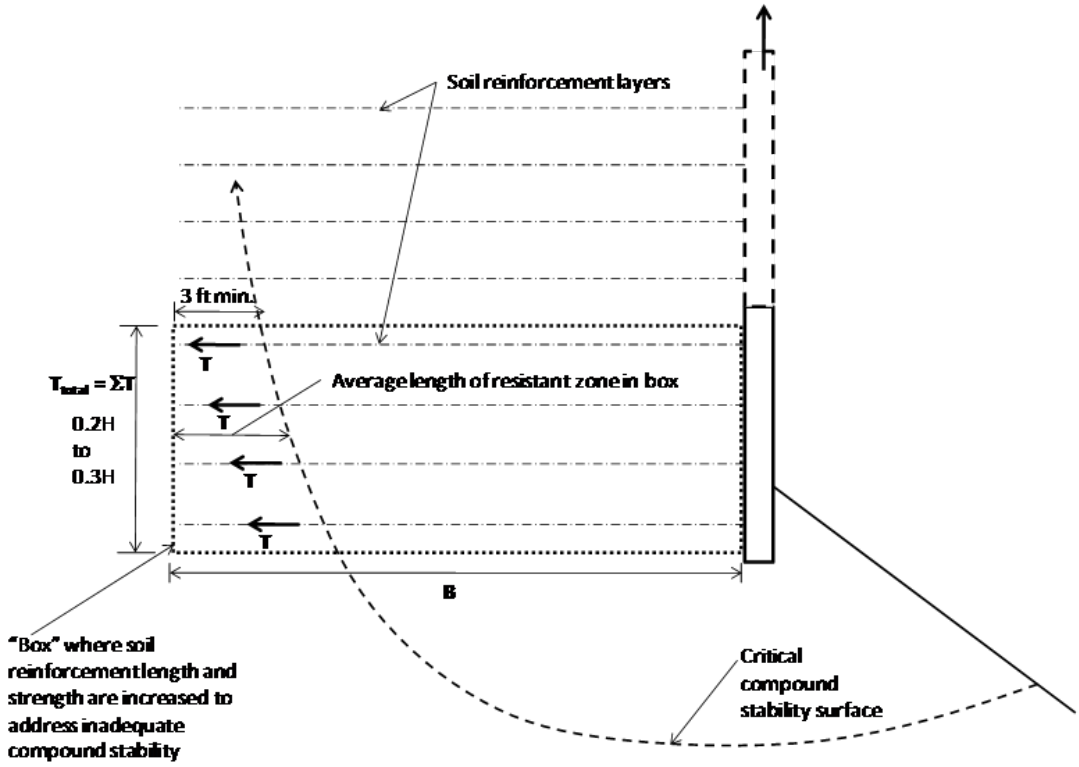

15-5.3.5 *Design of MSE Walls Placed in Front of Existing Permanent Walls or Rock*

Widening existing facilities sometimes requires MSE walls to be built in front of those existing facilities with inadequate room to obtain the minimum 0.7H wall base width. To reduce excavation costs and shoring costs in side hill situations, the "existing facility" could in fact be a shoring wall or even a near vertical rock slope face. See Figure 15-7 for a conceptual illustration of this situation.

In such cases, assuming that the existing facility is designed as a permanent structure with adequate design life, or if the barrier to adequate reinforcement length is a rock slope, the following design requirements apply:

- The minimum base width is 0.4H or 6 feet, whichever is greater, where H is the total height of the new wall. Note that for soil reinforcement lengths that are less than 8 feet, the weight and size of construction equipment used to place and compact the soil backfill will need to be limited in accordance with the AASHTO *LRFD Bridge Design Specifications* Article C11.10.2.1.

- A minimum of two reinforcement layers, or whatever is necessary for stability, shall extend over the top of the existing structure or steep rock face an adequate distance to insure adequate pullout resistance. The minimum length of these upper two reinforcement layers should be 0.7H, 5 feet behind the face of the existing structure or rock face, or the minimum length required to resist the pullout forces applied to those layers, whichever results in the greatest reinforcement length. Note that to accomplish this, it may be necessary to remove some of the top of the existing structure or rock face if the existing structure is nearly the same height as the new wall. The minimum clearance between the top of the existing structure or rock face and the first reinforcement layer extended beyond the top of the existing structure should be 6 in to prevent stress concentrations.
- The MSE wall reinforcements that are truncated by the presence of the existing structure or rock face shall not be directly connected to that existing face, due to the risk of the development of downdrag forces at that interface and the potential to develop bin pressures and higher reinforcement forces (i.e., T_{max}).
- For internal stability design of MSE walls in this situation, see Morrison, et al. (2006). Global and compound stability, both for static (strength limit state) and seismic loading, shall be evaluated, especially to determine the strength and pullout resistance needed for the upper layers that extend over the top of the existing feature. At least one surface that is located at the face of the existing structure but that goes through the upper reinforcement layers shall be checked for both static and seismic loading conditions. That surface will likely be critical for sizing the upper reinforcement layers.
- For new walls with a height over 30 feet, a lateral deformation analysis should be conducted (e.g., using a properly calibrated numerical model). Approval from the State Geotechnical and Bridge Design Engineers is required in this case.
- This type of MSE wall design should not be used to support high volume mainline transportation facilities if the vertical junction between the existing wall or rock face and the back of the new wall is within the traffic lane, especially if there is potential for cracking in the pavement surface to occur due to differential vertical movement at that location unless approved by the State Geotechnical and State Pavement engineers.

Figure 15-7 Example of Steep Shored MSE Wall

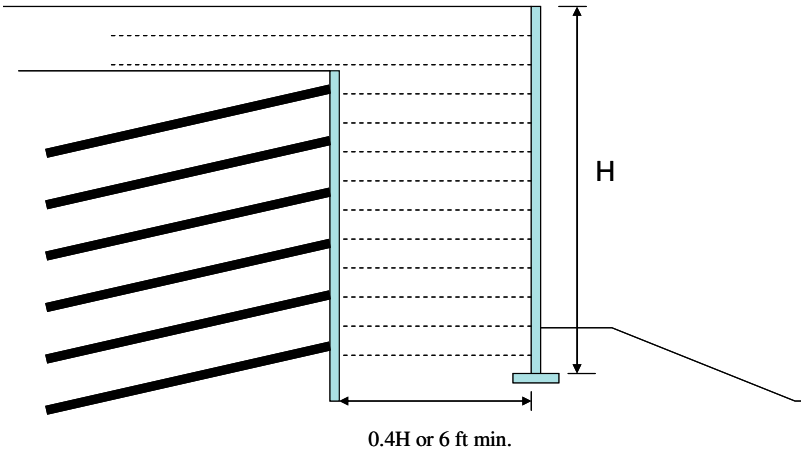

15-5.3.6 *MSE Wall Supported Abutments*

The geotechnical design of MSE wall supported bridge abutments shall be in accordance with the requirements in the following documents, provided in hierarchal order:

1. This *Geotechnical Design Manual*
2. The *Bridge Design Manual* (Section 7.5).
3. AASHTO *LRFD Bridge Design Specifications*.
4. FHWA NHI-10-024 Volume I and NHI-10-025 Volume II, "Design and Construction of Mechanically Stabilized Earth Walls and Reinforced Soil Slopes," (Berg et al., 2009)

See the WSDOT BDM, including Bridge Office Design Policy memoranda, for additional details regarding the design and geometric requirements for SE and geosynthetic wall supported bridge abutments.

The FHWA has developed a manual for a type of MSE wall supported bridge abutment, termed GRS-IBS, provided on the following FHWA website: http://www.fhwa.dot.gov/everydaycounts/technology/grs_ibs/

However, this GDM, and the referenced manuals and design memorandum provided at the beginning of this GDM section, shall be considered to supersede the FHWA GRS-IBS manual with regard to design and material requirements.

For MSE wall bridge abutments, two superstructure foundation support options are available:

- For single or multi-span bridges, subject to approval by the State Geotechnical and State Bridge Design engineer, use of a footing foundation placed directly above the MSE wall reinforced soil zone, or
- For flat slab single span bridges with a span length of up to 60 feet, the end of the flat slab itself bears directly on the surface of the MSE wall reinforced soil zone.

MSE walls directly supporting the bridge superstructure at the abutments shall be 30 feet or less in total height (i.e., height of exposed wall plus embedment depth of wall). Abutment spread footings, or the ends of the superstructure flat slab bearing directly on the surface of the MSE wall, should be designed for service loads not to exceed 3.0 TSF and factored strength limit state footing loads not to exceed 4.5 TSF. Because this is an increase relative to what is specified in the AASHTO *LRFD Bridge Design Specifications*, for bearing service loads greater than 2.0 TSF, a vertical settlement monitoring program with regard to footing or superstructure slab settlement shall be conducted. As a minimum, this settlement monitoring program should consist of monitoring settlement measurement points located at the front edge and back edge of the structure footing, or for slabs place directly on the SME wall top, two settlement measurement points located within the bearing area, and settlement monitoring points directly below the footing or slab bearing area at the base of the wall to measure settlement occurring below the wall. The monitoring program should be continued until movement has been determined to have stopped. If the measured footing settlement exceeds the vertical deformation and angular distortion requirements established for the structure, corrective action shall be taken.

For this MSE wall application, only the following MSE wall/facing types shall be used:

- Two stage geosynthetic wrapped face geosynthetic walls (i.e., similar to the Standard Plan D-3 wall) with cast-in-place (CIP) or precast concrete full height panels, or shotcrete depending on aesthetic needs,
- Single stage dry-cast concrete modular block faced walls using WSDOT preapproved concrete block – geosynthetic reinforcement combinations (see Appendix 15-D), and
- WSDOT preapproved proprietary MSE walls identified as such (see Appendix 15-D), but only those that are concrete faced. Welded wire faced preapproved MSE walls may be used for temporary bridge abutment applications. However, MSE walls identified in Appendix 15-D as preapproved proprietary walls shall not be considered preapproved for the MSE wall supported bridge abutment application (i.e., a special design is required).

Figures 15-8, 15-9, and 15-10 provide typical sections that should be used in the design of MSE wall bridge abutments. The base of the wall may be truncated to reduce excavation needs subject to the limitations provided in Section 11 of the AASHTO *LRFD Bridge Design Specifications*. Figure 15-9 is similar to the Standard Plan geosynthetic wall (Standard Plan D-3), except as modified in this figure for this application. This figure does not show all the details needed for the facing design. For the additional facing details needed, see Standard Plans D-3-10 and D-3-11. The minimum tensile strength of the geotextile or geogrid used as bridge approach soil reinforcement in figures 15-8 and 15-9 shall be 2.4 kips/ft in accordance with ASTM D4595 for geotextiles or ASTM D6637 for geogrids. The soil reinforcement and facing design is project specific and shall be completed in accordance with manuals and design policy documents cited at the beginning of this section.

Figure 15-8 Typical Section for MSE Wall Supported Abutment – Flat Slab Superstructure With no Footing and Dry-Cast Modular Block Wall Facing

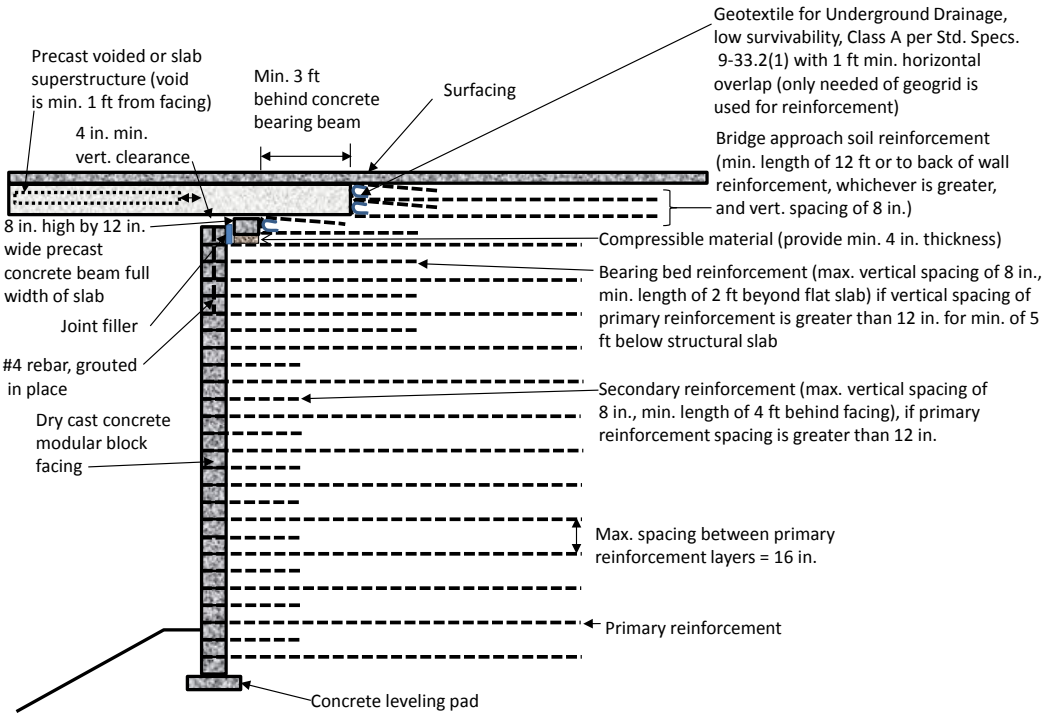

Figure 15-9 Typical Section for MSE Wall Supported Abutment – Flat Slab Superstructure With no Footing and Precast or CIP Concrete Wall Facing (Two Stage Wall Construction)

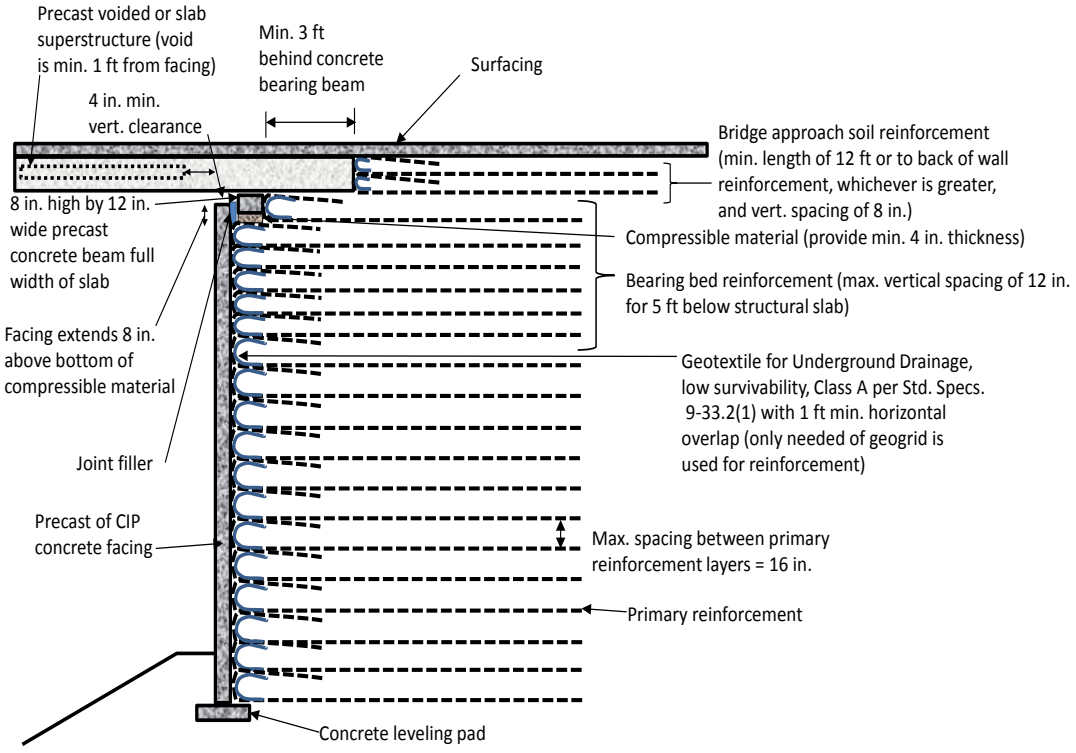

Figure 15-10 Typical Section Showing External Dimensions for Bridge With Spread Footing Supported Directly on an MSE Wall Semi-Integral Abutment (L-Abutment Similar; Wing/Curtain Wall Not Shown)

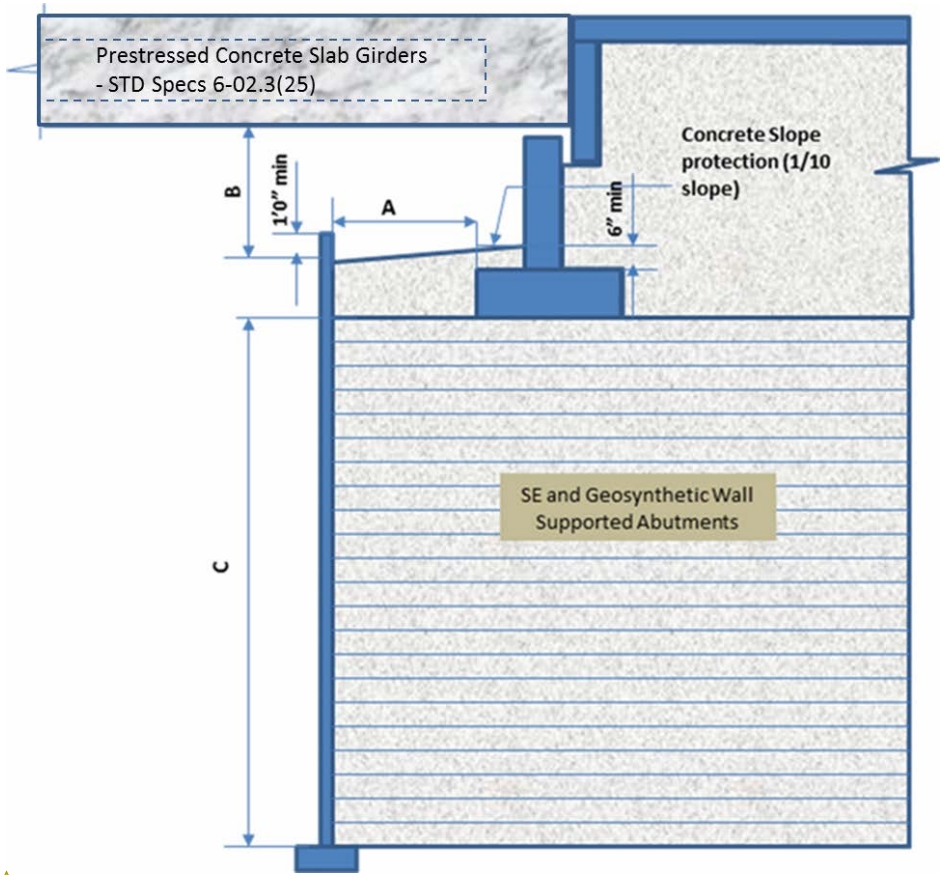

A = 4 feet min for SE Walls (precast concrete panel face or cast-in-place concrete face), 2 feet min for special designed geosynthetic retaining walls with wrapped face

B = 3 feet min for I-girder bridges, and 5 feet min for non-I-girder, slab, and box girder bridges

C = 30 feet max

For geosynthetic wrapped face two-stage walls with a precast or CIP concrete facing (e.g., similar to a Standard Plan geosynthetic wall) and walls faced with dry cast concrete blocks, a maximum reinforcement vertical spacing of 16 inches shall be used. However, for dry cast concrete block faced walls, secondary reinforcement layers with a minimum length of 4 feet behind the facing shall be placed between the primary reinforcement layers if the primary reinforcement layers are spaced at greater than 12 inches. This will result in a geosynthetic reinforcement layer being placed between every facing block. These spacing limitations apply to the portions of the MSE wall that directly support the bridge foundation (i.e., within the limits of stress increase due to the footing load per the AASHTO *LRFD Bridge Design Specifications*, Article 3.11.6.3). The secondary and bearing bed reinforcement layers, and the bridge approach reinforcement layers (see figures 15-8 and 15-9 for definition of these terms), shall be the same geosynthetic reinforcement product as the primary reinforcement layers directly above and below them. At transitions between primary reinforcement materials (if more than one geosynthetic product is used for the primary reinforcement), the secondary reinforcement materials shall be the stronger of the two primary reinforcement products above and below the secondary or bearing bed reinforcement layer.

For other MSE wall systems that can be used in this application as specified herein, the reinforcement spacing shall be as needed to meet the wall system requirements and the design requirements in the specified design manuals at the beginning of this section.

With regard to Figure 15-10, the minimum horizontal setbacks for the footing on the MSE wall are specified to minimize the potential for shear and excessive vertical deformation of the reinforced backfill too close to the connection of the reinforcement to the facing. The vertical clearance specified between the MSE facing units and the bottom of the superstructure is needed to provide access for bridge inspection. For flat slab single span bridges directly supported by MSE abutments, without a footing and bridge bearings (for span lengths up to 60 feet), these minimum setbacks and clearances do not apply.

The bearing resistance for the footing or flat slab supported by the MSE wall is a function of the soil reinforcement density in addition to the shear strength of the soil. If designing the wall using LRFD, two cases should be evaluated to size the footing for bearing resistance for the strength limit state, as two sets of load factors are applicable (see the AASHTO *LRFD Bridge Design Manual*, Section 3, for definitions of these terms):

- The load factors applicable to the structure loads applied to the footing, such as DC, DW, EH, LL, etc.
- The load factor applicable to the distribution of surcharge loads through the soil, ES.

When ES is used to factor the load applied to the soil to evaluate bearing, the structure loads and live load applied to the footing should be unfactored. When ES is not used to factor the load applied to the soil to evaluate bearing, the structure loads and live load applied to the footing should be factored using DC, DW, EH, LL, etc. The wall should be designed for both cases, and the case that results in the greatest amount of soil reinforcement should be used for the final strength limit state design. See the *Bridge Design Manual* for additional requirements on the application of load groups for design of MSE wall supported abutments, especially regarding how to handle live load, and for the structural detailing required.

The potential lateral and vertical deformation of the wall, considering the affect of the footing load on the wall, should be evaluated. Measures shall be taken to minimize potential deformation of the reinforced soil, such as use of high quality backfill such as Gravel Borrow compacted to 95 percent of maximum density. The settlement and lateral deformation of the soil below the wall shall also be included in this deformation analysis. If there is significant uncertainty in the amount of vertical deformation in or below the wall anticipated, the ability to jack the abutment to accommodate unanticipated abutment settlement should also be considered in the abutment design.

15-5.3.7 *Full Height Propped Precast Concrete Panel MSE Walls*

This wall system consists of a full height concrete facing panel directly connected to the soil reinforcement elements. The facing panel is braced externally during a significant percentage of the backfill placement. The amount the wall is backfilled before releasing the bracing is somewhat dependent on the specifics of the wall system and the amount of resistance needed to prevent the wall from moving excessively during placement of the remaining fill. Once the external bracing is released, the wall facing allowed to move in response to the release of the bracing.

A key issue regarding the performance of this type of wall is the differential settlement that is likely to occur between the rigid facing panel and the backfill soil as the backfill soil compresses due to the increase in overburden pressure as the fill is placed. Since the facing panel, for practical purposes, can be considered to be essentially rigid, all the downward deformation resulting from the backfill soil compression causes the reinforcing elements to be dragged down with the soil, causing a strain and load increase in the soil reinforcement at its connection with the facing panel. As the wall panel becomes taller, the additional reinforcement force caused by the backfill settlement relative to the facing panel becomes more significant.

WSDOT has successfully built walls of this nature up to 25 feet in height. For greater heights, the uncertainty in the prediction of the reinforcement loads at the facing connection for this type of MSE wall can become large. Specialized design procedures to estimate the magnitude of the excess force induced in the reinforcement at the connection may be needed, requiring approval by the WSDOT State Geotechnical Engineer.

15-5.3.8 *Flexible Faced MSE Walls With Vegetation*

If a vegetated face is to be used with an MSE wall, the exposed (i.e., above ground wall height shall be limited to 20 feet or less, and the wall face batter shall be no steeper than 1H:6V, unless the facing is battered at 1H:2V or flatter, in which case the maximum height could be extended to 30 feet). A flatter facing batter may be needed depending on the wall system – see appendices to this GDM chapter for specific requirements. For the vegetated facing, if the facing batter is steeper, or if the height is greater than specified here, the compressibility of the facing topsoil could create excessive stresses, settlement, and/or bulging in the facing, any of which could lead to facing stability or deformation problems.

The topsoil placed in the wall face to encourage vegetative growth shall be minimized as much as possible, and should be compacted to minimize internal settlement of the facing. For welded wire facing systems, the effect of the topsoil on the potential corrosion of the steel shall be considered when sizing the steel members at the face and at the connection to the soil reinforcement.

In general, placement of drip irrigation piping within or above the reinforced soil volume to encourage the vegetative growth in the facing should be avoided. However, if a drip irrigation system must be used and placed within or above the reinforced soil volume, the wall shall be designed for the long-term presence of water in the backfill and at the face, regarding both increased design loads and increased degradation/ corrosion of the soil reinforcement, facing materials, and connections.

15-5.3.9 *Dry Cast Concrete Block Faced MSE Walls*

For modular dry cast block faced walls, WSDOT has observed block cracking in near vertical walls below a depth of 25 feet from the wall top in some block faced walls. Key contributing factors include tolerances in the vertical dimension of the blocks that are too great (maximum vertical dimension tolerance should be maintained at +1/16 in or less for walls built as part of WSDOT projects, even though the current ASTM requirements for these types of blocks have been relaxed to +⅛ in), poor block placement technique, soil reinforcement placed between the blocks that creates too much unevenness between the block surfaces, some forms of shimming to make facing batter adjustments, and inconsistencies in the block concrete properties. See Figure 15-11 for illustrations of potential causes of block cracking. Another tall block faced wall problem encountered by others includes shearing of the back portion of the blocks parallel to the wall, possibly face due to excessive buildup of downdrag forces immediately behind the blocks. This problem, if it occurs, has been observed in the bottom 5 to 7 feet of walls that have a hinge height of approximately 25 to 30 feet (total height of 35 feet or more) and may have been caused by excessive downdrag forces due to backfill soil compressibility immediately behind the facing.

Figure 15-11 Example Causes of Cracking in Modular Dry Cast Concrete Block Wall Facings

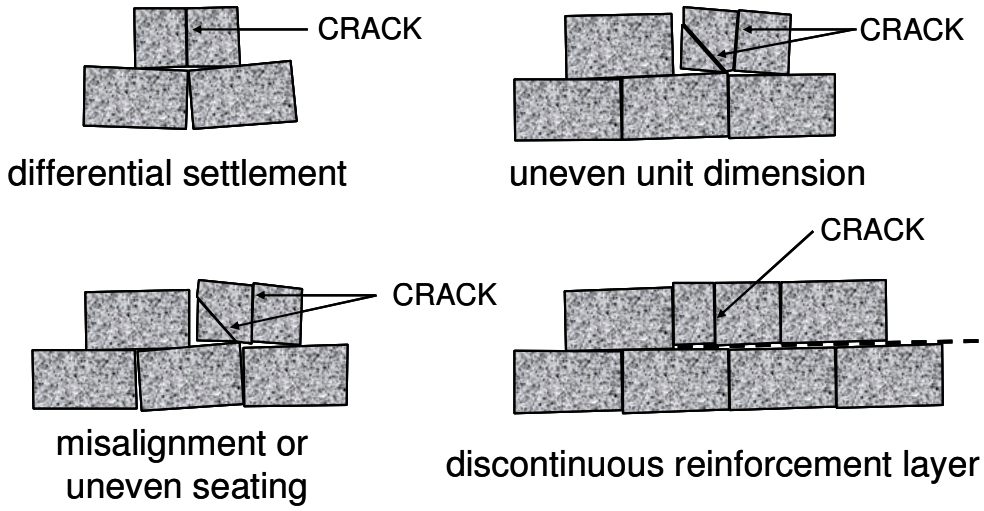

Considering these potential problems, for modular dry cast concrete block faced walls, the wall height should be limited to 30 feet if near vertical, or to a hinge height of 30 feet if battered. Block wall heights greater than this may be considered on a project specific basis, subject to the approval of the State Geotechnical and State Bridge Design Engineers, if the requirements identified below are met:

- Total settlement is limited to 2 in and differential settlement is limited to 1.5 inch as identified in Table 15-3. Since this is specified in Table 15-3, this also applies to shorter walls.
- A concrete leveling pad is placed below the first lift of blocks to provide a uniform flat surface for the blocks. Note that this should be done for all preapproved block faced walls regardless of height.

- A moderately compressible bearing material is placed between each course of blocks, such as a geosynthetic reinforcement layer. The layer must provide an even bearing surface (many polyester geogrids or multi-filament woven geotextiles provide an adequately even bearing surface with sufficient thickness and compressibility to distribute the bearing load between blocks evenly). The bearing material needs to extend from near the front edge of the blocks (without protruding beyond the face) to at least the back of the blocks or a little beyond. As a minimum, this should be done for all block lifts that are 25 feet or more below the wall top, but doing this for block lifts at depths of less than 25 feet as well is desirable.

If the wall face is tiered such that the front of the facing for the tier above is at least 3 feet behind the back of the facing elements in the tier below, then these height limitations only apply to each tier. The minimum setback between tiers is needed to reduce build-up of excessive down drag forces behind the lower tier wall facing.

Success in building such walls without these block cracking or shear failure problems will depend on the care with which these walls are constructed and the enforcement of good construction practices through proper construction inspection, especially with regard to the constructability issues identified previously. Success will also depend on the quality of the facing blocks. Therefore, making sure that the block properties and dimensional tolerances meet the requirements in the contract through testing and observation is also important and should be carried out for each project.

Modular block facings should not be used where periodic inundation due to tides or flooding can occur, unless a project specific assessment of the amount and frequency of inundation is conducted and approval by the WSDOT State Geotechnical Engineer to use the facing blocks below the inundation zone is obtained. Periodic inundation may affect the durability of dry cast concrete facing blocks and could locally elevate the pH at the connection between the soil reinforcement and the facing as unreacted lime leaches from the facing blocks. Elevated pH can affect the durability of polyester geosynthetics.

15-5.3.10 *Internal Stability Using the Stiffness Method*

The Stiffness Method, as described by Allen and Bathurst (2015, 2018), is provided in the AASHTO *LRFD Bridge Design Specifications* (Sections 3 and 11) to design the internal stability for MSE walls with extensible reinforcement that are not in high settlement areas (i.e., total settlement beneath the wall of more than 6 in.). See Allen and Bathurst (2018) for a definition of "extensible" for soil reinforcement. The AASHTO *LRFD Bridge Design Specifications* are applicable, as well as the traffic barrier design provisions in the WSDOT BDM, except as modified in the provisions that follow.

15-5.3.10.1 *Determination of T_{max} Using the Stiffness Method*

The AASHTO Simplified and Coherent Gravity methods rely on limit equilibrium and/or earth pressure theory concepts for their formulation but modified based on empirical data, whereas, the Stiffness Method, also empirically derived, relies on the difference in the stiffness of the various wall components to determine and distribute loads to the wall reinforcement layers and the facing.

Though all of these methods can be used to evaluate the potential for reinforcement rupture and pullout for the Strength and Extreme Event limit states, only the Stiffness Method can be used to directly evaluate the potential for soil backfill failure. These

other methods used in historical practice indirectly account for soil failure based on the successful construction of thousands of structures (i.e., if the other limit states are met, soil failure will be prevented, and the wall will meet serviceability requirements for internal stability).

Detailed Stiffness Method procedures and design examples are provided in Allen and Bathurst (2018) in the Supplemental Data associated with that paper, and additional examples are provided in Appendix 15-E.

A key parameter for this method is the geosynthetic secant creep stiffness at 1,000 hours and 2% strain as determined using AASHTO R-69. Product specific creep stiffness test data can be obtained from NTPEP (2019) and Allen and Bathurst (2019).

For the Stiffness Method, T_{max} is calculated as follows:

$$T_{max} = S_v [H\gamma_r D_{tmax} + \gamma_r(H_{ref}/H)S]k_{avh}\,\Phi \quad (15\text{-}1)$$

where,

S_v = tributary vertical thickness for reinforcement layer (ft)
H = height of wall (ft)
H_{ref} = reference wall height = 20 ft
γ_r = unit weight of soil in wall reinforcement zone (lbs/ft^3)
S = average soil surcharge thickness over reinforcement (ft)
γ_f = unit weight of soil in wall in surcharge above wall (lbs/ft^3)
D_{tmax} = T_{max} distribution factor (dim)
k_{avh} = active earth pressure coefficient for a wall with a vertical face (dim.)
Φ = empirically determined influence factor that captures the effect that the soil reinforcement properties, soil cohesion, and wall geometry have on T_{max} (dim)

D_{tmax} shall be determined as follows:

For $z < z_b$:

$$D_{tmax} = D_{tmax0} + (z/z_b)(1 - D_{tmax0}) \quad (15\text{-}2)$$

For $z \geq z_b$: $D_{tmax} = 1.0$

$$z_b = C_h (H)^{1.2} \quad (15\text{-}3)$$

where,

z = depth of reinforcement layer below top of wall at wall face (ft)
z_b = depth below top of wall at wall face where D_{tmax} becomes equal to 1.0 (and below which D_{tmax} equals 1.0) (ft)
D_{tmax0} = T_{max} distribution factor magnitude at top of wall at wall face, equal to 0.12 (dim)
C_h = coefficient equal to 0.32 when H is in ft and 0.40 when H is in meters

Determination of the T_{max} distribution factor D_{tmax} is illustrated in Figure 15-12. In the figure, depths below the wall top have been normalized by the wall height, H. T_{mxmx} is the maximum value of T_{max} in the wall section where the soil backfill failure surface crosses the reinforcement layers.

Figure 15-12 Illustration of D_{tmax} factor for the Stiffness Method

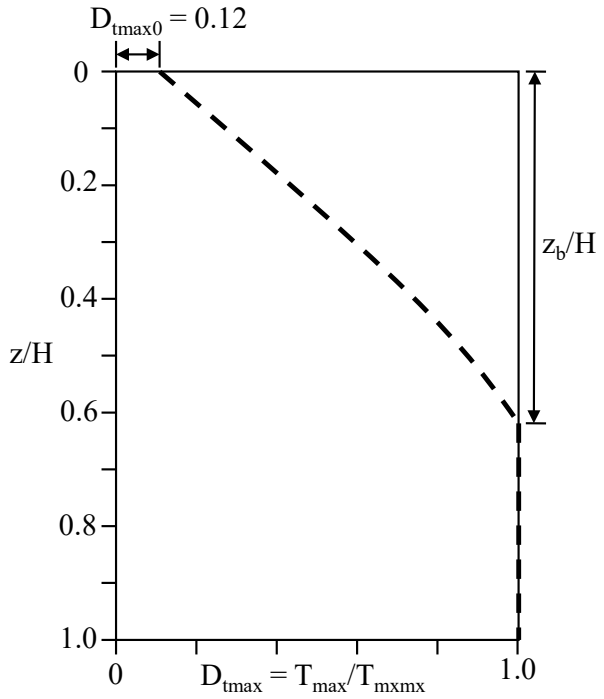

For vertical or near-vertical walls (i.e., a facing batter of 10° or less from the vertical) with a single reinforcement strength and stiffness, and cohesionless backfill soil (defined as having a plasticity index of 6 or less), Φ may be determined as follows:

$$\Phi = \Phi_g \Phi_{fs} \quad (15\text{-}4)$$

where,

Φ_g = global stiffness factor (dim)
Φ_{fs} = facing stiffness factor (dim)

The global stiffness factor Φ_g shall be determined as follows:

$$\Phi_g = \alpha \left(\frac{S_{global}}{p_a} \right)^{\beta} \quad (15\text{-}5)$$

where,

α = empirical coefficient = 0.16
β = empirical exponent = 0.26
S_{global} = global reinforcement stiffness (ksf)
P_a = atmospheric pressure at sea level (equals 2.11 ksf if S_{global} is in ksf, or 101 kPa if S_{global} is in kPa)

and,

$$S_{\text{global}} = \frac{J_{\text{ave}}}{(\text{H/n})} = \frac{\sum_{i=1}^{n} R_c J_i}{H} \quad (15\text{-}6)$$

where,

J_{ave} = average secant tensile creep stiffness corrected for the coverage ratio, i.e., $R_c J_i$, of all "n" reinforcement layers (kips/ft)

J_i = secant tensile creep stiffness of reinforcement layer i per unit of reinforcement width (kips/ft)

R_c = reinforcement coverage ratio (dim)

n = number of reinforcement layers in wall section (dim)

S_{global} and Φ_g shall be determined per unit of wall width rather than per reinforcement width, as T_{max} represents a force per unit per unit of wall width. Hence, R_c is included in Equation 15-6.

For geogrids and geotextiles, the reinforcement stiffness J_i should be based on the laboratory secant creep stiffness at 2% strain and 1,000 hours as specified in AASHTO R-69. For polymer strap walls, working strains tend to be lower than for other geosynthetics based on strain measurements observed in full scale polymer strap walls (Miyata et al., 2018), and J_i determined at a strain level of 1% may be more appropriate.

The facing stiffness factor Φ_{fs} shall be determined as follows:

$$\Phi_{fs} = \eta\left(\left(\frac{S_{\text{global}}}{p_a}\right)F_f\right)^{\kappa} \quad (15\text{-}7)$$

where,

η = empirical coefficient = 0.57

κ = empirical exponent = 0.15

F_f = facing stiffness parameter as calculated using Equation 15-8 (dim)

$$F_f = \frac{1.5H^3 p_a}{Eb^3(h_{\text{eff}}/H)} \quad (15\text{-}8)$$

where,

E = elastic modulus of the "equivalent elastic beam" representing the wall face (ksf)

b = thickness of the facing column (ft)

h_{eff} = equivalent height of an un-jointed facing column that is approximately 100% efficient in transmitting moment through the height of the facing column (ft)

All other variables are as defined previously.

For a flexible faced wall with extensible reinforcement (e.g., geosynthetics), and for all inextensible reinforced (e.g., steel) walls, set Φ_{fs} = 1. For full height and incremental panel walls, h_{eff} = H and panel height, respectively. Since the facing stiffness factor Φ_{fs} is intended to be a single value for the wall, a single representative value of h_{eff} must be selected. Typically, h_{eff} is set equal to the reinforcement vertical spacing in modular block-type structures since the reinforcement is located at the horizontal joints between facing units. For blocks that do not have a reinforcement layer at the horizontal joints, these facings will have better interlock and moment transfer from block to block. If the reinforcement spacing is non-uniform, the smallest predominate spacing (e.g., involving 3 or more reinforcement layers in the wall), defined as a spacing that involves three or more

reinforcement layers, should be used for this calculation. Smaller h_{eff} values will lead to more conservative (safer) design because the facing stiffness factor will be larger. For two-stage walls in which the outer facing is built after the wall is built to full height, the facing stiffness factor shall be based on the facing stiffness of the first stage wall (typically the first stage wall face is flexible, and Φ_{fs} = 1.0 in that case). The facing stiffness factor Φ_{fs} could also be conservatively set to 1.0 for tall geosynthetic walls (i.e., H > 30 ft) and for typical "thin" panel-face systems, such as incremental concrete panels.

To calculate F_f, an elastic modulus of the facing column is needed. For wet cast concrete (e.g., in incremental concrete panels), the modulus typically is typically 300,000 to 600,000 ksf. For dry cast concrete, the elastic modulus is typically less, on the order of 200,000 to 250,000 ksf. In addition, for dry cast concrete facing blocks, if the blocks are not solid or have an irregular geometry, this modulus should be further reduced based on the plan view cross-sectional area of the block.

For discontinuous reinforcement, the reinforcement coverage ratio shall be determined as specified in Article 11.10.6.4.1 of the AASHTO *LRFD Bridge Design Specifications*.

If the wall is tall enough such that layers with different strength and stiffness properties are needed to match the layer strengths to the layer specific T_{max} values, the complete Stiffness Method equation should be used, though the complete equation can be used any time if a more accurate estimate of T_{max} is desired. For the complete Stiffness Method, Φ in Equation 15-4 is expanded as follows:

$$\Phi = \Phi_g \Phi_{fs} \Phi_{fb} \Phi_{local} \Phi_c \quad (15\text{-}9)$$

where,

Φ_g = global stiffness factor (dim)
Φ_{fs} = facing stiffness factor (dim)
Φ_{fb} = facing batter factor (dim)
Φ_{local} = local stiffness factor (dim)
Φ_c = soil cohesion factor (dim)

Φ_g and Φ_{fs} are determined as shown in equations 15-5 and 15-7. Φ_{fb} shall be determined as follows:

$$\Phi_{fb} = \left(\frac{K_{abh}}{K_{avh}} \right)^d \quad (15\text{-}10)$$

where,

d = empirical exponent = 0.40
K_{abh} = coefficient of active lateral earth pressure considering wall face batter (dim)
K_{avh} = coefficient of active lateral earth pressure not considering wall face batter (i.e., assuming wall face is vertical) (dim)

For both determinations of the coefficient of active lateral earth pressure, wall friction is assumed to be zero.

The local stiffness factor, Φ_{local}, shall be determined as follows:

$$\Phi_{local} = \left(\frac{S_{local}}{S_{localave}} \right)^{a} \quad (15\text{-}11)$$

where,

a = empirical exponent = 0.50 for extensible reinforcement (e.g., geotextiles, geogrids, polymer straps)

S_{local} = local reinforcement stiffness determined as follows:

$$S_{local} = R_C J / S_v \quad (15\text{-}12)$$

where,

R_C, J_i and S_v are as defined previously

$S_{localave}$ shall be determined as follows:

$$S_{localave} = \frac{\sum_{i=1}^{n} (R_c J_i / S_V)}{n}$$

where,

all variables are as defined previously.

As is true for S_{global}, S_{local} , $S_{localave}$, and Φ_{local} shall be determined per unit of wall width rather than per reinforcement width, as T_{max} represents a force per unit per unit of wall width. Hence, R_c is included in equations 15-11 and 15-12.

The soil cohesion factor, Φ_c, shall be determined as follows:

$$\Phi_c = e^{\lambda(c/(\gamma_r H))} \quad (15\text{-}13)$$

where,

e = base for the natural logarithm, equal to approximately 2.718…

λ = empirical coefficient within exponent = -16

c = cohesion of MSE wall backfill (psf)

All other variables are as defined previously.

Note that this cohesion term does not apply to apparent cohesion resulting from matric suction or nonlinearity of Mohr's envelope (Allen and Bathurst 2018). See Table 15-E-2 for selecting soil parameters for design and how soil cohesion should be handled. Soil backfill cohesion shall be assumed to be zero for design. Furthermore, for WSDOT projects, cohesive backfill shall not be used for the MSE wall. However, if soil cohesion (i.e., "true cohesion" as identified in Table 15-E-2) is present, Φ_c may be used to assess the potential for post-construction deformation and reinforcement load increase. See Appendix 15-E for additional information on this subject.

Conceptually, the Stiffness Method was developed by starting with the Simplified Method, but modifying that method empirically to improve its accuracy, considering the stiffness of the wall components, and improving the distribution of T_{max} as a function of depth in the wall to more accurately reflect full scale wall measurements. Figure 15-13 illustrates the relationship between the Simplified Method and the Stiffness Method.

Figure 15-13 Comparison of AASHTO Simplified and Stiffness Method equations (Allen and Bathurst 2015)

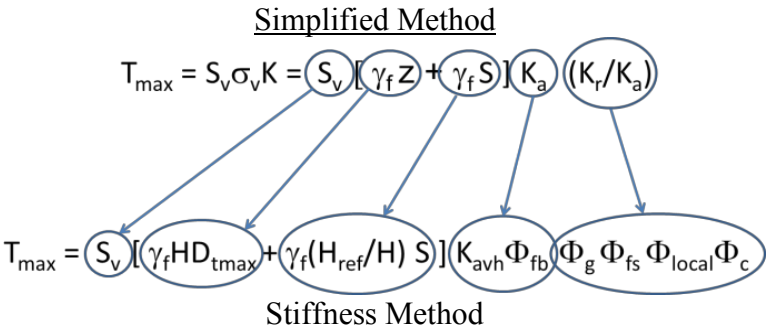

15-5.3.10.2 *Load and Resistance Factors for the Stiffness Method*

Table 15-5 provides a summary of the load and resistance factors needed for MSE wall internal stability design using the Stiffness method to estimate T_{max}. Reliability theory, using the Monte Carlo method as described in Allen et al. (2005), was used to determine the load and resistance factors provided in the table. For additional information regarding calibration of these load and resistance factors, see Allen and Bathurst (2018) and the Supplemental Materials associated with that paper. Note that the resistance factors were adjusted relative to Allen and Bathurst (2018) to reflect the load factor (i.e., 1.35 for vertical earth pressure, EV) currently in the AASHTO *LRFD Bridge Design Manual* for the Strength Limit State.

Table 15-5 Load and Resistance Factors for the Stiffness Method (Service and Strength Limit States)

Limit State[1]	Reinforcement Type	Load Factor, $\gamma_{p\text{-}EV}$, $\gamma_{p\text{-}EVc}$, and $\gamma_{p\text{-}EVsf}$	Live Load,[2] γ_{LL}	Resistance Factor ϕ_{rr}, ϕ_{cr}, ϕ_{po} and ϕ_{sf}
Reinforcement rupture, $\gamma_{p\text{-}EV}$, and connection failure, $\gamma_{p\text{-}con}$ (strength limit)	Geogrids and geotextiles	1.35	1.75	0.80
	[4]Polymer straps	1.35	1.75	0.55
Soil failure, $\gamma_{p\text{-}EVsf}$ (service limit)	All geosynthetics	1.20	1.0	1.0
Pullout, $\gamma_{p\text{-}EV}$ (strength limit - default model in AASHTO 2020)[3]	All geosynthetics	1.35	N/A	0.70

Notes:

[1] Based on probability of failure = 1% (target reliability index β = 2.3) to determine resistance factor for strength limit states. Probability of failure = 15% (β = 1.0) for service limit state. See Allen and Bathurst (2018) and Bathurst et al. (2019) for additional background on these calibrations.

[2] AASHTO (2020); Berg et al. (2009) use γ_{ES} = 1.5 for traffic loads on MSE walls.

[3] The pullout resistance factor was developed assuming that the default pullout models provided in AASHTO 2020 are used. See Bathurst et al. (2019) for reliability theory calibrations using available empirical data. See Miyata et al. (2019) for pullout model calibration for polymer strap reinforcement.

[4] Also termed geostrips.

15-5.3.10.3 Design for Internal Stability Limit States Using the Stiffness Method

Limit states considered here include the soil failure limit state in Service I, and pullout, reinforcement strength, and connection strength in Strength I and Extreme Event I (seismic) and II (scour).

15-5.3.10.3.1 Soil Failure Limit State (Service I)

The soil failure limit state is considered a service limit state for design because it is a deformation criterion. Furthermore, if this criterion is substantially exceeded, the structure will not collapse but will more likely develop progressive increases in facing deformation.

The soil failure limit state often controls the amount of geosynthetic reinforcement required. See Allen and Bathurst (2019) for proof of this and to determine the relationship between creep stiffness and tensile strength. Therefore, it is recommended that this limit state be checked first to establish the minimum reinforcement stiffness required and to use this as input for determining T_{max} for reinforcement and connection rupture, and pullout. For wall systems that have relatively low facing-reinforcement connection strength, it is possible that connection strength may control the amount of reinforcement needed instead. If this is the case, be sure to check whether or not the increased tensile strength will require a stiffer reinforcement, in which case, the increased stiffness value(s) will need to be used to recalculate T_{max} (i.e., it is important to make sure that the tensile strength and stiffness specified for final design are well matched).

Reinforced fill soil failure is defined to occur when the working strain in the reinforcement exceeds a value sufficient to allow the soil to reach or exceed its peak shear strength and a contiguous shear failure zone within the reinforced wall backfill develops. For the stiffness Method as described in GDM Section 15-5.3.10.1, the wall shall be designed to prevent failure of the soil within the reinforced soil mass, thus preserving working stress conditions. To prevent exceedance of the soil failure limit state, the reinforcement strain ε_{rein} in individual layers shall be determined as follows for extensible reinforcement:

$$\varepsilon_{rein} = \frac{\gamma_{p-EVsf} T_{max}}{\phi_{sf} R_c J_i} \leq \varepsilon_{mxmx} \quad (15\text{-}14)$$

where,

ε_{rein} = the reinforcement strain in any individual reinforcement layer corresponding to T_{max} (%)

$\gamma_{p\text{-}EVsf}$ = load factor for prediction of T_{max} for the soil failure limit state in Table 15-5 (dim)

T_{max} = the maximum load in the reinforcement at each reinforcement level, as specified in Section 15-5.3.10.1 (kips/ft)

ϕ_{sf} = resistance factor that accounts for uncertainty in the measurement of the reinforcement stiffness at the specified strain, as specified in Table 15-5 (dim)

R_c = reinforcement coverage ratio (dim)

J_i = secant tensile stiffness of reinforcement layer i per unit of reinforcement width (kips/ft)

ε_{mxmx} = maximum acceptable strain in the wall cross-section corresponding to T_{max} in any reinforcement layer (%)

J_i should be determined at a strain of 2% for geogrids and geotextiles. J_i should be determined at 1,000 hrs or the estimated time to complete the wall, as specified in AASHTO R-69. ϕ_{sf} is as specified in Table 15-5.

If multiple load sources are acting on the reinforced soil backfill, they shall be added to T_{max} as determined using Equation 15-1 by using superposition.

The maximum acceptable strain in each reinforcement layer ε_{mxmx} corresponding to T_{max} should be set at 2.0% strain for stiff faced walls and 2.5% strain for flexible faced walls. These criteria have the objective of preventing the development of a contiguous shear surface though the reinforced soil zone. If it is decided to treat the wall as having a flexible face (i.e., a facing stiffness factor of 1.0) even though the facing is classified as a stiff face, such as a modular block facing, or if the calculated facing stiffness factor is 1.0, such as typically occurs for taller walls, the maximum acceptable strain for a flexible faced wall should be used.

For polymer strap walls, working strains tend to be lower than for other geosynthetics based on strain measurements observed in full scale polymer strap walls (Miyata et al., 2018), and J_i determined at a strain level of 1% may be more appropriate.

Note that to account for reinforcement coverage ratios less than one, R_c must be included in Equation 15-14 as shown, where J_i is the reinforcement stiffness from laboratory testing.

15-5.3.10.3.2 *Pullout Limit State (Strength I)*

The requirements in the AASHTO *LRFD Bridge Design Manual* apply, except that T_{max} is calculated using the Stiffness Method, and T_{max} is considered to be unfactored. Therefore, the pullout limit state equation in the current AASHTO LRFD specifications is modified to be as follows:

$$L_e \geq \frac{\gamma_{p-EV} T_{max}}{\phi_{po} F^* \alpha \sigma_v C R_c} \qquad (15\text{-}15)$$

where,

L_e = length of reinforcement in resisting zone (ft)
T_{max} = applied load in the reinforcement as specified in Section 15-5.3.10.1 (kips/ft)
$\gamma_{p\text{-}EV}$ = load factor for vertical earth pressure specified in Table 15-5 (dim.)
ϕ_{po} = resistance factor for reinforcement pullout from Table 15-5 (dim.)
F^* = pullout friction factor (dim.)
α = scale effect correction factor (dim.)
σ_v = unfactored vertical stress at the reinforcement level in the resistant zone (ksf)
C = overall reinforcement surface area geometry factor based on the gross perimeter of the reinforcement and is equal to 2 for strip, grid and sheet-type reinforcements, i.e., two sides (dim.)
R_c = reinforcement coverage ratio determined as shown in the AASHTO *LRFD Bridge Design Manual*, Article 11.10.6.4.1 (dim.)

If T_{max} includes multiple load sources with different load factors, $\gamma_{p\text{-}EV}T_{max}$ should be replaced with T_{totalf}, calculated using superposition, as follows:

$$T_{totalf} = \gamma_{p\text{-}EV}T_{max} + \gamma_{p\text{-}ES}S_v(k_a\Delta\sigma_V + \Delta\sigma_H) \quad (15\text{-}16)$$

where,

$\gamma_{p\text{-}EV}$ = load factor for vertical earth pressure specified in Table 15-5 (dim.)

$\gamma_{p\text{-}ES}$ = load factor for earth surcharge (ES) in the AASHTO *LRFD Bridge Design Manual*, Table 3.4.1-2

$\Delta\sigma_v$ = vertical soil stress due to concentrated load such as a footing load (ksf)

$\Delta\sigma_H$ = horizontal stress at reinforcement level resulting from a concentrated horizontal surcharge load (ksf)

S_v = tributary layer vertical thickness for reinforcement (ft)

K_a = active lateral earth pressure coefficient (dim)

Note that Equation 15-16 does not include traffic live load nor seismic load.

For polymer strap reinforcement, the default pullout F* envelope and α value in the AASHTO *LRFD Bridge Design Manual* (Figure 11.10.6.3.2-2 and Table 11.10.6.3.2-1, respectively) for geogrids shall be used.

15-5.3.10.3.3 *Reinforcement Tensile and Connection Strength Limit States (Strength I)*

The requirements in the AASHTO *LRFD Bridge Design Manual* apply, except that T_{max} is calculated using the Stiffness Method, and T_{max} is considered to be unfactored. Therefore, the reinforcement strength limit state equation in the current AASHTO LRFD specifications is modified to be as follows:

$$\gamma_{p\text{-}EV}\ T_{max} \le \phi T_{al} R_c \quad (15\text{-}17)$$

where,

T_{max} = applied load in the reinforcement as specified in Section 15-5.3.10.1 (kips/ft)

$\gamma_{p\text{-}EV}$ = load factor for vertical earth pressure specified in Table 3.4.1-2 (dim.)

ϕ = resistance factor for reinforcement tension, specified in Table 15-5 (dim.)

T_{al} = nominal long-term reinforcement strength (kips/ft)

R_c = reinforcement coverage ratio determined as shown in the AASHTO *LRFD Bridge Design Manual*, Article 11.10.6.4.1 (dim.)

If traffic live load is present replace $\gamma_{p\text{-}EV}T_{max}$ with T_{totalf} calculated as shown below:

$$T_{totalf} = \gamma_{p\text{-}EV}T_{max} + (\gamma_{LS})\gamma_f h_{eq} < \phi T_{al} R_c \quad (15\text{-}18)$$

where,

T_{totalf} = total factored load for each reinforcement layer (lbs/ft)

γ_{LS} = load factor for live load surcharge, LS, as specified in the AASHTO *LRFD Bridge Design Manual*, Table 3.4.1-1 (dim.)

γ_f = unit weight of soil used to calculate live load surcharge, LS (lbs/ft^3)

h_{eq} = equivalent height of soil for live load surcharge (ft)

If multiple load sources other than traffic live load are present, use Equation 15-16 to determine T_{totalf}. It follows that if these additional load sources are added by superposition for the Strength limit state design, that these additional load sources should also be added by superposition to the Service limit state value of T_{max} in Equation 15-14. However, doing so is likely to be excessively conservative, especially for typical loads used for bridge footings. If such foundation loads are present above the reinforced soil portion of the wall, it may be best to design the geosynthetic wall using the Simplified Method or using limit equilibrium as included in the AASHTO LRFD Bridge Design Specifications.

The long-term geosynthetic strength away from the connection of the reinforcement to the wall facing shall be determined in accordance with the AASHTO *LRFD Bridge Design Manual*, Article 11.10.6.4, and AASHTO R-69. Values of T_{al} for specific geosynthetic products shall be as provided in the WSDOT QPL, Appendix D.

For the reinforcement connection strength, the AASHTO *LRFD Bridge Design Manual* requirements shall apply. Connection tests shall be conducted in accordance with ASTM D6638 to obtain the short-term connection strength $T_{ultconn}$ for modular block facings or ASTM D4884 for seam connections. The connection strength requirements provided for the specific wall systems identified in the appendices to Chapter 15 shall be used.

15-5.3.10.3.4 *Seismic Internal Stability Design Using the Stiffness Method*

The requirements in the AASHTO *LRFD Bridge Design Manual*, Article 11.10.7.2, apply, except that T_{max} is calculated using the Stiffness Method, and the additional seismically induced reinforcement load is added to T_{max} using superposition. The load and resistance factors for the Extreme Event I Limit State provided in the AASHTO *LRFD Bridge Design Manual* shall be used, except that the resistance factors for reinforcement tensile resistance and pullout resistance shall be reduced to 1.0. See Appendix 15-E for additional details on requirements for conducting seismic design for internal stability using the Stiffness Method.

15-5.4 Prefabricated Modular Walls

Modular block walls without soil reinforcement, gabion, bin, and crib walls shall be considered prefabricated modular walls.

In general, modular block walls without soil reinforcement (referred to as Gravity Block Walls in the *Standard Specifications* Section 8-24 shall have heights no greater than 2.5 times the depth of the block into the soil perpendicular to the wall face, and shall be stable for all modes of internal and external stability failure mechanisms. In no case, shall their height be greater than 15 feet. Gabion walls shall be 15 feet or less in total height. Gabion baskets shall be arranged such that vertical seams are not aligned, i.e., baskets shall be overlapped.

15-5.5 Rock Walls

Rock walls shall be designed in accordance with the *Standard Specifications*, and the wall-slope combination shall be stable regarding overall stability as determined per Chapter 7.

Rock walls shall not be used unless the retained material would be at least minimally stable without the rock wall (a minimum slope stability factor of safety of 1.25). Rock walls are considered to act principally as erosion protection and they are not considered

to provide strength to the slope unless designed as a buttress using limit equilibrium slope stability methods. Rock walls shall have a batter of 6V:1H or flatter. The rocks shall increase in size from the top of the wall to the bottom at a uniform rate. The minimum rock sizes shall be:

Table 15-6 Minimum Rock Sizes for Rock Walls

Depth from Top of Wall (feet)	Minimum Rock Size	Typical Rock Weight (lbs)	Average Dimension (inches)
0	Two Man	200-700	18-28
6	Three Man	700-2000	28-36
9	Four Man	2000-4000	36-48
12	Five Man	4000-6000	48-54

Rock walls shall be 12 feet or less in total height. Rock walls used to retain fill shall be 6 feet or less in total height. Fills constructed for this purpose shall be compacted to 95 percent maximum density, per WSDOT *Standard Specifications* Section 2-03.3(14)D.

Rock walls should be designed in accordance with FHWA Manual No. FHWA- CFL/TD-06-006 (Mack, et al., 2006), but subject to the limitations and requirements specified in this GDM.

15-5.6 Reinforced Slopes

Reinforced slopes do not have a height limit but they do have a face slope steepness limit. Reinforced slopes steeper than 0.5H:1V shall be considered to be a wall and designed as such. Reinforced slopes with a face slope steeper than 1.2H:1V shall have a wrapped face or a welded wire slope face, but should be designed as a reinforced slope. Slopes flatter than or equal to 1.2H:1V shall be designed as a reinforced slope, and may use turf reinforcement to prevent face slope erosion except as noted below. Reinforcing shall have a minimum length of 6 feet. Turf reinforcement of the slope face shall only be used at sites where the average annual precipitation is 20 in or more. Sites with less precipitation shall have wrapped faces regardless of the face angle. The primary reinforcing layers for reinforced slopes shall be vertically spaced at 3 feet or less. Primary reinforcement shall be steel grid, geogrid, or geotextile. The primary reinforcement shall be designed in accordance with Berg, et al. (2009), using allowable stress design procedures, since LRFD procedures are not available. Secondary reinforcement centered between the primary reinforcement at a maximum vertical spacing of 1 foot shall be used, but it shall not be considered to contribute to the internal stability. Secondary reinforcement aids in compaction near the face and contributes to surficial stability of the slope face. Design of the secondary reinforcement should be done in accordance with Berg, et al. (2009). The secondary reinforcement ultimate tensile strength measured per ASTM D6637 or ASTM D4595 should not be less than 1,300 lb/ft in the direction of tensile loading to meet survivability requirements. Higher strengths may be needed depending on the design requirements. Gravel borrow shall be used for reinforced slope construction as modified by the *General Special Provisions* in Division 2 (see GDM Appendix 15-A for details). The design and construction shall be in accordance with the General Special Provisions.

15-5.7 Soil Nail Walls

Soil nail walls shall be designed in accordance with the most current edition of AASHTO *LRFD Bridge Design Manual*. The following manual should be consulted for additional information on soil nail wall design; however, the AASHTO *LRFD Bridge Design Manual* shall govern if there are any conflicts.

Lazarte, C. A., Robinson, H., Gomez, J. E., Baxter, A., Cadden, A., and Berg, R., 2015. *Geotechnical Engineering Circular No. 7, Soil Nail Walls – Reference Manual*, U.S. Department of Transportation, Federal Highway Administration, FHWA-NHI-14-007, 425 pp.

For external stability and compound stability analysis, as described in Section 15-5.3.4 and the AASHTO *LRFD Bridge Design Specifications*, limit equilibrium slope stability analysis as described in Chapter 7 should be used.

The geotechnical designer shall design the wall at critical wall sections. Each critical wall section shall be evaluated during construction of each nail lift. To accomplish this, the wall shall be analyzed for the case where excavation has occurred for that lift, but the nails have not been installed. The minimum construction safety factor shall be 1.2 for noncritical walls and 1.35 for critical walls (e.g., when underpinning bridge abutments or other structures that are sensitive to settlement). However, temporary and permanent underpinning of bridge, wall, or other moderately to heavily loaded structure foundations with soil nail walls, or other cut wall types that use non-tensioned drilled in place lateral elements, shall not be done without approval by the WSDOT State Geotechnical Engineer and State Bridge Engineer.

Permanent soil nails shall be installed in predrilled holes. Soil nails that are installed concurrently with drilling shall not be used for permanent applications, but may be used in temporary walls.

Soil nail tendons shall be number 6 bar or larger and a minimum of 12 feet in length or 60 percent of the total wall height, whichever is greater. Nail testing shall be in accordance with the WSDOT *Standard Specifications* and *General Special Provisions*.

The nail spacing should be no less than 3 feet vertical and 3 feet horizontal. In very dense glacially over consolidated soils, horizontal nail spacing should be no greater than 8 feet and vertical nail spacing should be no greater than 6 feet. In all other soils, horizontal and vertical nail spacing should be 6 feet or less.

Nails may be arranged in a square row and column pattern or an offset diamond pattern. Horizontal nail rows are preferred, but sloping rows may be used to optimize the nail pattern. As much as possible, rows should be linear so that each individual nail elevation can be easily interpolated from the station and elevation of the beginning and ending nails in that row. Nails that cannot be placed in a row must have station and elevation individually identified on the plans. Nails in the top row of the wall shall have at least 1 foot of soil cover over the top of the drill hole during nail installation. Horizontal nails shall not be used. Nails should be inclined at least 10 degrees downward from horizontal. Inclination should not exceed 30 degrees.

Walls underpinning structures such as bridges and retaining walls shall have double corrosion protected (encapsulated) nails within the zone of influence of the structure being retained or supported.

Furthermore, nails installed in soils with strong corrosion potential, defined as:

- pH < 4.5 or > 10 (AASHTO T289),
- Resistivity < 2000 ohm-cm (AASHTO T-288),
- Sulphates > 200 ppm (AASHTO T290), or
- Chlorides > 100 ppm (AASHTO T291)

shall also have double corrosion protection. All other nails shall be epoxy, coated unless the wall is temporary and in soils not defined as having strong corrosion potential.

For inspection of soil nail wall installation and testing, the guidance in the following manual should be used:

Porterfield, J. A., Cotton, D. A., Byrne, R. J., 1994, *Soil Nail Walls-Demonstration Project 103, Soil Nailing Field Inspectors Manual*, U.S. Department of Transportation, Federal Highway Administration, FHWA-SA-93-068, 86 pp.

15-6 Standard Plan Walls

Currently, two Standard Plan walls are available for use on WSDOT projects. These include standard cast-in-place reinforced concrete walls (Standard Plans D-10.10 through D-10.45), and standard geosynthetic walls (Standard Plans D-3, 3a, 3b, and 3c). For Standard Plan walls, the internal stability design and the external stability design for overturning and sliding stability have already been completed, and the maximum soil bearing stress below the wall calculated, for a range of loading conditions. The geotechnical designer shall identify the appropriate loading condition to use (assistance from the Bridge and Structures Office and/or the project office may be needed), and shall assess overall slope stability, compound stability for geosynthetic walls as applicable, soil bearing resistance, and settlement for each standard plan wall. If it is not clear which loading condition to use, both external and internal stability may need to be evaluated to see if one of the provided loading conditions is applicable to the wall under consideration. The geotechnical designer shall assess whether or not a Standard Plan wall is geotechnically applicable and stable given the specific site conditions and constraints.

The Standard Plan walls have been designed using LRFD methodology in accordance with the AASHTO *LRFD Bridge Design Specifications*. Standard Plan reinforced concrete walls are designed for internal and external stability using the following parameters:

- A_s = 0.51g for Wall Types 1 through 4, and 0.20g for Wall Types 5 through 8. For sliding stability, the wall is allowed to slide 4 in to calculate k_h from A_s using a Newmark deformation analysis, or a simplified version of it.
- For the wall Backfill, φ = 36° and γ = 130 pcf.
- For the foundation soil, for sliding stability analysis, φ = 32°.
- Wall settlement criteria are as specified in Table 15-2.

Standard Plan geosynthetic walls are designed for internal and external stability using the following parameters:

- A_s = 0.51g for Wall Types 1 through 4, and 0.20g for Wall Types 5 through 8. For sliding stability, the wall is allowed to slide 8 in to calculate k_h from A_s using a Newmark deformation analysis, or a simplified version of it.

- For the wall Backfill, φ = 38° and γ = 130 pcf.
- For the foundation soil, for sliding stability analysis, φ = 36°, and interface friction angle of 0.7×36° = 25°.
- For the retained soil behind the soil reinforcement, for external stability analysis, φ = 36° and γ = 130 pcf.
- Wall settlement criteria are as specified in Table 15-2, unless the settlement of the first stage wall (i.e., the geosynthetic wall without the final concrete fascia) is complete before the final concrete fascia is installed, in which case the settlement criteria in Table 15-4 may be used).

Regarding the seismic sliding analysis, the geotechnical and structural designers should determine if the amount of deformation allowed (4 in for reinforced concrete walls and 8 in for geosynthetic walls) is acceptable for the wall and anything above the wall that the wall supports. Note that for both static and seismic loading conditions, no passive resistance in front of the geosynthetic wall is assumed to be present for design.

15-7 Temporary Cut Slopes and Shoring

This section addresses the design requirements for temporary cut slopes and shoring, both separately and in combination. For temporary cuts and shoring, construction submittals are required in accordance with the *Standard Specifications* M 41-10 or other contract documents. This section also addresses submittal review requirements for these temporary facilities. The design and submittal requirements for temporary fills for haul roads, construction equipment access, and other temporary construction activities are as specified in Section 9.5.5.

15-7.1 Overview

Temporary shoring, cofferdams, and cut slopes are frequently used during construction of transportation facilities. Examples of instances where temporary shoring may be necessary include:

- Support of an excavation until permanent structure is in-place such as to construct structure foundations or retaining walls.
- Control groundwater.
- Limit the extent of fill needed for preloads or temporary access roads/ramps.

Examples of instances where temporary slopes may be necessary include:

- Situations where there is adequate room to construct a stable temporary slope in lieu of shoring.
- Excavations behind temporary or permanent retaining walls.
- Situations where a combination of shoring and temporary excavation slopes can be used.
- Removal of unsuitable soil adjacent to an existing roadway or structure;
- Shear key construction for slide stabilization.
- Culvert, drainage trench, and utility construction, including those where trench boxes are used.

The primary difference between temporary shoring/cut slopes/cofferdams, hereinafter referred to as temporary shoring, and their permanent counterparts is their design life. Typically, the design life of temporary shoring is the length of time that the shoring or cut slope are required to construct the adjacent, permanent facility. Because of the short design life, temporary shoring is typically not designed for seismic loading, and corrosion protection is generally not necessary. Additionally, more options for temporary shoring are available due to limited requirements for aesthetics. Temporary shoring is typically designed by the contractor unless the contract plans include a detailed shoring design. For contractor designed shoring, the contractor is responsible for internal and external stability, as well as global slope stability, soil bearing capacity, and settlement of temporary shoring walls.

Exceptions to this, in which WSDOT provides the detailed shoring design, include shoring in unusual soil deposits or in unusual loading situations in which the State has superior knowledge and for which there are few acceptable options or situations where the shoring is supporting a critical structure or facility. One other important exception is for temporary shoring adjacent to railroads. Shoring within railroad right of way typically requires railroad review. Due to the long review time associated with their review, often 9 months or more, WSDOT has been designing the shoring adjacent to railroads and obtaining the railroad's review and concurrence prior to advertisement of the contract. Designers involved in alternative contract projects may want to consider such an approach to avoid construction delays.

Temporary shoring is used most often when excavation must occur adjacent to a structure or roadway and the structure or traffic flow cannot be disturbed. For estimating purposes during project design, to determine if temporary shoring might be required for a project, a hypothetical 1H:1V temporary excavation slope can be utilized to estimate likely limits of excavation for construction, unless the geotechnical designer recommends a different slope for estimating purposes. If the hypothetical 1H:1V slope intersects roadway or adjacent structures, temporary shoring may be required for construction. The actual temporary slope used by the contractor for construction will likely be different than the hypothetical 1H:1V slope used during design to evaluate shoring needs, since temporary slope stability is the responsibility of the contractor unless specifically designated otherwise by the contract documents.

15-7.2 Geotechnical Data Needed for Design

The geotechnical data needed for design of temporary shoring is essentially the same as needed for the design of permanent cuts and retaining structures. Chapter 10 provides requirements for field exploration and testing for cut slope design, and Section 15-3 discusses field exploration and laboratory testing needs for permanent retaining structures. Ideally, the explorations and laboratory testing completed for the design of the permanent infrastructure will be sufficient for design of temporary shoring systems by the Contractor. This is not always the case, however, and additional explorations and laboratory testing may be needed to complete the shoring design.

For example, if the selected temporary shoring system is very sensitive to groundwater flow velocities (e.g., frozen ground shoring) or if dewatering is anticipated during construction, as the Contractor is also typically responsible for design and implementation of temporary dewatering systems, more exploration and testing may be needed. In these instances, there may need to be more emphasis on groundwater conditions at

a site; and multiple piezometers for water level measurements and a large number of grain size distribution tests on soil samples should be obtained. Downhole pump tests should be conducted if significant dewatering is anticipated, so the contractor has sufficient data to develop a bid and to design the system. It is also possible that shoring or excavation slopes may be needed in areas far enough away from the available subsurface explorations that additional subsurface exploration may be needed. Whatever the case, the exploration and testing requirements for permanent walls and cuts in the GDM shall also be applied to temporary shoring and excavation design.

15-7.3 General Design Requirements

Temporary shoring shall be designed such that the risk to health and safety of workers and the public is kept to an acceptable level and that adjacent improvements are not damaged.

15-7.3.1 *Design Procedures*

For geotechnical design of retaining walls used in shoring systems, the shoring designer shall use the AASHTO *LRFD Bridge Design Specifications* and the additional design requirements provided in the GDM. For those wall systems that do not yet have a developed LRFD methodology available, for example, soil nail walls, the FHWA design manuals identified herein that utilize allowable stress methodology shall be used, in combination with the additional design requirements in the GDM. The design methodology, input parameters, and assumptions used must be clearly stated on the required submittals (see Section 15-7.2).

Regardless of the methods used, the temporary shoring wall design must address both internal and external stability. Internal stability includes assessing the components that comprise the shoring system, such as the reinforcing layers for MSE walls, the bars or tendons for ground anchors, and the structural steel members for sheet pile walls and soldier piles. External stability includes an assessment of overturning, sliding, bearing resistance, settlement and global stability.

For geotechnical design of cut slopes, the design requirements provided in chapters 7 and 10 shall be used and met, in addition to meeting the applicable WACs (see Section 15-7.5).

For shoring systems that include a combination of soil or rock slopes above and/or below the shoring wall, the stability of the slope(s) above and below the wall shall be addressed in addition to the global stability of the wall/slope combination.

For shoring and excavation conducted below the water table elevation, the potential for piping below the wall or within the excavation slope shall be assessed, and the effect of differential water elevations behind and in front of the shoring wall, or see page in the soil cut face, shall be assessed regarding its effect on wall and slope stability, and the shoring system stabilized for that condition.

If temporary excavation slopes are required to install the shoring system, the stability of the temporary excavation slope shall be assessed and stabilized.

15-7.3.2 *Safety Factors/Resistance Factors*

For temporary structures, the load and resistance factors provided in the AASHTO *LRFD Bridge Design Specifications* are applicable. Global stability shall be evaluated for the Strength Limit State. Therefore, any structure loads present shall be factored using the Strength Limit State load factors. The resistance factor for global stability of the shoring system should be 0.75 (slope stability factor of safety of 1.3 for wall types in which LRFD procedures are not available). For soil nail walls, the load and resistance factors provided in the AASHTO *LRFD Bridge Design Manual* shall be used.

For design of cut slopes that are part of a temporary excavation, a factor of safety of 1.25 or more as specified in chapters 7 and 10, shall be used. If the soil properties are well defined and shown to have low variability, a lower factor of safety may be justified through the use of the Monte Carlo simulation feature available in slope stability analysis computer programs. In this case, a probability of failure of 0.01 or smaller shall be targeted (Santamarina, et al., 1992). However, even with this additional analysis, in no case shall a slope stability safety factor less than 1.2 be used for design of the temporary cut slope.

15-7.3.3 *Design Loads*

The active, passive, and at-rest earth pressures used to design temporary shoring shall be determined in accordance with the procedures outlined in Article 3.11.5 of the AASHTO *LRFD Bridge Design Specifications* or Section 5 of the AASHTO *Standard Specifications for Highway Bridges* (2002) for wall types in which LRFD procedures are not available. Surcharge loads on temporary shoring shall be estimated in accordance with the procedures presented in Article 3.11.6 of the AASHTO LRFD Specifications, or Section 5 of the AASHTO *Standard Specifications for Highway Bridges* (2002) for wall types in which LRFD procedures are not available. It is important to note that temporary shoring systems often are subject to surcharge loads from stockpiles and construction equipment, and these surcharges loads can be significantly larger than typical vehicle surcharge loads often used for design of permanent structures. The design of temporary shoring must consider the actual construction-related loads that could be imposed on the shoring system. As a minimum, the shoring systems shall be designed for a live load surcharge of 250 psf to address routine construction equipment traffic above the shoring system. For unusual temporary loadings resulting from large cranes or other large equipment placed above the shoring system, the loading imposed by the equipment shall be specifically assessed and taken into account in the design of the shoring system. For the case where large or unusual construction equipment loads will be applied to the shoring system, the construction equipment loads shall still be considered to be a live load, unless the dynamic and transient forces caused by use of the construction equipment can be separated from the construction equipment weight as a dead load, in which case, only the dynamic or transient loads carried or created by the use of the construction equipment need to be considered live load.

As described previously, temporary structures are typically not designed for seismic loads, provided the design life of the shoring system is 3 years or less. Similarly, geologic hazards, such as liquefaction, are not mitigated for temporary shoring systems.

The design of temporary shoring must also take into account the loading and destabilizing effect caused by excavation dewatering.

15-7.3.4 *Design Property Selection*

The procedures provided in Chapter 5 shall be used to establish the soil and rock properties used for design of the shoring system.

Due to the temporary nature of the structures and cut slopes in shoring design, long-term degradation of material properties, other than the minimal degradation that could occur during the life of the shoring, need not be considered. Therefore, corrosion for steel members, and creep for geosynthetic reinforcement, need to only be taken into account for the shoring design life.

Regarding soil properties, it is customary to ignore any cohesion present for permanent structure and slope design (i.e., fully drained conditions). However, for temporary shoring/cutslope design, especially if the shoring/cutslope design life is approximately six months or less, a minimal amount of cohesion may be considered for design based on previous experience with the geologic deposit and/or lab test results. This does not apply to glacially overconsolidated clays and clayey silts (e.g., Seattle clay), unless it can be demonstrated that deformation in the clayey soil resulting from release of locked in stresses during and after the excavation process can be fully prevented. If the deformation cannot be fully prevented, the shoring/cutslope shall be designed using the residual shear strength of the soil (see Chapter 5). If the glacially overconsolidated clay is already in a disturbed state due to previous excavations at the site or due to geologic processes such as landsliding, glacial shoving, or shearing due to fault activity, resulting in significant fracturing and slickensides, residual strength parameters should be used even if the shoring system can fully prevent further deformation (see Section 5.13.3 for additional requirements on this issue).

If it is planned to conduct soil modification activities that could temporarily or permanently disturb or otherwise loosen the soil in front of or behind the shoring (e.g., stone column installation, excavation), the shoring shall be designed using the disturbed or loosened soil properties.

15-7.4 Special Requirements for Temporary Cut Slopes

Temporary cuts slopes are used extensively in construction due to the ease of construction and low costs. Since the contractor has control of the construction operations, the contractor is responsible for the stability of cut slopes, as well as the safety of the excavations, unless otherwise specifically stated in the contact documents. Because excavations are recognized as one of the most hazardous construction operations, temporary cut slopes must be designed to meet Federal and State regulations in addition to the requirements stated in the GDM. Federal regulations regarding temporary cut slopes are presented in Code of Federal Regulations (CFR) Part 29, Sections 1926. The State of Washington regulations regarding temporary cut slopes are presented in Part N of WAC 296-155. Key aspects of the WAC with regard to temporary slopes are summarized below for convenience. To assure obtaining the most up to date requirements regarding temporary slopes, the WAC should be reviewed.

WAC 296-155 presents maximum allowable temporary cut slope inclinations based on soil or rock type, as shown in Table 15-7. WAC 296-155 also presents typical sections for compound slopes and slopes combined with trench boxes. The allowable slopes presented in the WAC are applicable to cuts 20 feet or less in height. The WAC requires that slope inclinations steeper than those specified by the WAC or for slope heights greater than 20 feet, as well as slopes in soils or rock not meeting the requirements to be classified as stable rock, or Type A, B, or C soil, shall be designed by a registered professional engineer. As a minimum, the design by or under the supervision of the registered professional engineer shall include a geotechnical slope stability analysis (i.e., Chapter 7) that is based on a knowledge of the subsurface conditions present, including soil and rock stratigraphy, engineering data that can be used to estimate soil and rock properties, and ground water conditions, and with consideration to the loading conditions on or above the slope that could affect its stability. The design shall be conducted in accordance with the requirements in this GDM and referenced documents. Engineering recommendations based upon field observations alone shall not be considered to be an engineering design as defined in the WAC and this GDM.

Table 15-7 WAC 296-155 Allowable Temporary Cut Slopes

Soil or Rock Type	Maximum Allowable Temporary Cut Slopes (20 Feet Maximum Height)
Stable Rock	Vertical
Type A Soil	¾H:1V
Type B Soil	1H:1V
Type C Soil	1½H:1V

Type A Soil – Type A soils include cohesive soils with an unconfined compressive strength of 3,000 psf or greater. Examples include clay and plastic silts with minor amounts of sand and gravel. Cemented soils such as caliche and glacial till (hard pan) are also considered Type A Soil. No soil is Type A if:

- It is fissured.
- It is subject to vibrations from heavy traffic, pile driving or similar effects.
- It has been previously disturbed.
- The soil is part of a sloped, layered system where the layers dip into the excavation at 4H:1V or greater.
- The material is subject to other factors that would require it to be classified as a less stable material.

Type B Soil – Type B soils generally include cohesive soils with an unconfined compressive strength greater than 1000 psf but less than 3000 psf and granular cohesionless soils with a high internal angle of friction, such as angular gravel or glacially overridden sand and gravel soils. Some silty or clayey sand and gravel soils that exhibit an apparent cohesion may sometimes classify as Type B soils. Type B soils may also include Type A soils that have previously been disturbed, are fissured, or subject to vibrations. Soils with layers dipping into the excavation at inclinations steeper than 4H:1V cannot be classified as Type B soil.

Type C Soil – Type C soils include most non-cemented granular soils (e.g., gravel, sand, and silty sand) and soils that do not otherwise meet Types A or B.

The allowable slopes described above apply to dewatered conditions. Flatter slopes may be necessary if seepage is present on the cut face or if localized sloughing occurs. All temporary cut slopes greater than 20 feet in height shall be designed by a registered civil engineer (geotechnical engineer). All temporary cut slopes supporting a structure or wall, regardless of height, shall also be designed by a registered civil engineer (geotechnical engineer) in accordance with the GDM. If for a specific project, as specifically identified in the contract documents, the location of a proposed temporary excavation could undermine marginally stable ground, such as would occur if the excavation will result in material being removed from the toe of an inactive or active landslide, the cut for the excavation shall be designed by a registered civil engineer (geotechnical engineer) in accordance with the GDM.

For open temporary cuts, the following requirements shall be met:

- No traffic, stockpiles or building supplies shall be allowed at the top of the cut slopes within a distance of at least 5 feet from the top of the cut.
- Exposed soil along the slope shall be protected from surface erosion,
- Construction activities shall be scheduled so that the length of time the temporary cut is left open is reduced to the extent practical.
- Surface water shall be diverted away from the excavation.
- The general condition of the slopes should be observed periodically by the Geotechnical Engineer or his representative to confirm adequate stability.

15-7.5 Performance Requirements for Temporary Shoring and Cut Slopes

Temporary shoring, shoring/slope combinations, and slopes shall be designed to prevent excessive deformation that could result in damage to adjacent facilities, both during shoring/cut slope construction and during the life of the shoring system. An estimate of expected displacements or vibrations, threshold limits that would trigger remedial actions, and a list of potential remedial actions if thresholds are exceeded should be developed. Thresholds shall be established to prevent damage to adjacent facilities, as well as degradation of the soil properties due to deformation.

Typically, the allowance of up to 1 to 2 inches of lateral movement will prevent unacceptable settlement and damage of most structures and transportation facilities. A little more lateral movement could be allowed if the facility or structure to be protected is far enough away from the shoring/slope system.

Guidance regarding the estimation of wall deformation and tolerable deformations for structures is provided in the AASHTO *LRFD Bridge Design Specifications*. Additional guidance on acceptable deformations for walls and bridge foundations is provided in Chapter 8 and Section 15-4.7.

In the case of cantilever walls, the resistance factor of 0.75 applied to the passive resistance accounts for variability in properties and other sources of variability, as well as the prevention of excess deformation to fully mobilize the passive resistance. The amount of deformation required to mobilize the full passive resistance typically varies from 2 to 6 percent of the exposed wall height, depending on soil type in the passive zone (AASHTO 2017).

15-7.6 Special Design Requirements for Temporary Retaining Systems

The design requirements that follow for temporary retaining wall systems are in addition, or are a modification, to the design requirements for permanent walls provided in Chapter 15 and its referenced design specifications and manuals. Detailed descriptions of various types of shoring systems and general considerations regarding their application are provided in Appendix 15-F.

15-7.6.1 *Fill Applications*

Primary design considerations for temporary fill walls include external stability to resist lateral earth pressure, ground water, and any temporary or permanent surcharge pressures above or behind the wall. The wall design shall also account for any destabilizing effects caused by removal or modification of the soil in front of the wall due to construction activities. The wall materials used shall be designed to provide the required resistance for the design life of the wall. Backfill and drainage behind the wall shall be designed to keep the wall backfill well drained with regard to ground see page and rainfall runoff.

If the temporary wall is to be buried and therefore incorporated in the finished work, it shall be designed and constructed in a manner that it does not inhibit drainage in the finished work, so that:

- It does not provide a plane or surface of weakness with regard to slope stability.
- It does not interfere with planned installation of foundations or utilities.
- It does not create the potential for excessive differential settlement of any structures placed above the wall.

Provided the wall design life prior to burial is three years or less, the wall does not need to be designed for seismic loading.

15-7.6.1.1 *MSE Walls*

MSE walls shall be designed for internal and external stability in accordance with Section 15-5.3 and related AASHTO Design Specifications. Because the walls will only be in service a short time (typically a few weeks to a couple years), the reduction factors (e.g., creep, durability, installation damage) used to assess the allowable tensile strength of the reinforcing elements are typically much less than for permanent wall applications. The T_{al} values (i.e., long-term tensile strength) of geosynthetics, accounting for creep, durability, and installation damage in Appendix D of the WSDOT *Qualified Products List* (QPL) may be used for temporary wall design purposes.

However, those values will be quite conservative, since the QPL values are intended for permanent reinforced structures.

Alternatively, for geosynthetic reinforcement, a default combined reduction factor for creep, durability, and installation damage in accordance with the AASHTO specifications (LRFD or *Standard Specifications*) may be used, ranging from a combined reduction factor RF of 4.0 for walls with a life of up to three years, to 3.0 for walls with a one-year life, to 2.5 for walls with a six month life. If steel reinforcement is used for temporary MSE walls, the reinforcement is not required to be galvanized, and the loss of steel due to corrosion is estimated in consideration of the anticipated wall design life.

15-7.6.1.2 *Prefabricated Modular Block Walls*

Prefabricated modular block walls without soil reinforcement are discussed in Section 15-5.4 and should be designed as gravity retaining structures. The blocks shall meet the requirements in the WSDOT *Standard Specifications*. Implementation of this specification will reduce the difficulties associated with placing blocks in a tightly fitted manner. Large concrete blocks should not be placed along a curve. Curves should be accomplished by staggering the wall in one-half to one full block widths.

15-7.6.2 *Cut Applications*

Primary design considerations for temporary cut walls include external stability to resist lateral earth pressure, ground water, and any temporary or permanent surcharge pressures above or behind the wall. The wall design shall also account for any destabilizing effects caused by removal or modification of the soil in front of the wall due to construction activities. The wall materials used shall be designed to provide the required resistance for the design life of the wall. Backfill and drainage behind the wall should be designed to keep the retained soil well drained with regard to ground water see page and rainfall runoff. If this is not possible, then the shoring wall should be designed for the full hydrostatic head.

If the temporary wall is to be buried and therefore incorporated in the finished work, it shall be designed and constructed in a manner that it does not inhibit drainage in the finished work, so that:

- It does not provide a plane or surface of weakness with regard to slope stability.
- It does not interfere with planned installation of foundations or utilities.
- It does not create the potential for excessive differential settlement of any structures placed above the wall.

Provided the wall design life prior to burial is three years or less, the wall does not need to be designed for seismic loading.

15-7.6.2.1 *Trench Boxes*

In accordance with the WSDOT *Standard Specifications*, trench boxes are not considered to be structural shoring, as they generally do not provide full lateral support to the excavation sides. Trench boxes are not appropriate for excavations that are deeper than the trench box. Generally, detailed analysis is not required for design of the system; however, the contractor should be aware of the trench box's maximum loading conditions for situations where surcharge loading may be present, and should demonstrate that the maximum anticipated lateral earth pressures will not exceed the structural capacity of the trench box. Geotechnical information required to determine whether trench boxes are appropriate for an excavation include the soil type, density, and groundwater conditions. Also, where existing improvements are located near the excavation, the soil should exhibit adequate standup time to minimize the risk of damage as a result of caving soil conditions against the outside of the trench box. In accordance with sections 15-7.3 and 15-7.4, the excavation slopes outside of the trench box shall be designed to be stable.

15-7.6.2.2 *Sheet Piling, with or without Ground Anchors*

The design of sheet piling requires a detailed geotechnical investigation to characterize the retained soils and the soil located below the base of excavation/dredge line. The geotechnical information required for design includes soil stratigraphy, unit weight, shear strength, and groundwater conditions. In situations where lower permeability soils are present at depth, sheet piles are particularly effective at cutting off groundwater flow. Where sheet piling is to be used to cutoff groundwater flow, characterization of the soil hydraulic conductivity is necessary for design.

The sheet piling shall be designed to resist lateral stresses due to soil and groundwater, both for temporary (i.e., due to dewatering) and permanent ground water levels, as well as any temporary and permanent surcharges located above the wall. If there is the potential for a difference in ground water head between the back and front of the wall, the depth of the wall, or amount of dewatering behind the wall, shall be established to prevent piping and boiling of the soil in front of the wall.

The steel section used shall be designed for the anticipated corrosion loss during the design life of the wall. The ground anchors for temporary walls do not need special corrosion protection if the wall design life is three years or less, though the anchor bar or steel strand section shall be designed for the anticipated corrosion loss that could occur during the wall design life. Easements may be required if the ground anchors, if used, extend outside the right of way/property boundary.

Sheet piling should not be used in cobbly, bouldery soil or dense soil. They also should not be used in soils or near adjacent structures that are sensitive to vibration.

15-7.6.2.3 *Soldier Piles With or Without Ground Anchors*

Design of soldier pile walls requires a detailed geotechnical investigation to characterize the retained soils and the soil located below the base of excavation. The geotechnical information required for design includes soil stratigraphy, unit weight, shear strength, surcharge loading, foreslope and backslope inclinations, and groundwater conditions. The required information presented in sections 15-3 and 15-5.3 is pertinent to the design of temporary soldier pile walls.

The wall shall be designed to resist lateral stresses due to soil and groundwater, both for temporary (i.e., due to dewatering) and permanent ground water levels, as well as any temporary and permanent surcharges located above the wall. If there is the potential for a difference in ground water head between the back and front of the wall, the depth of the wall, or amount of dewatering behind the wall, shall be established to prevent boiling of the soil in front of the wall. The temporary lagging shall be designed and installed in a way that prevents running/caving of soil below or through the lagging.

The ground anchors for temporary walls do not need special corrosion protection if the wall design life is three years or less. However, the anchor bar or steel strand section shall be designed for the anticipated corrosion loss that could occur during the wall design life. Easements may be required if the ground anchors, if used, extend outside the right of way/property boundary.

15-7.6.2.4 *Prefabricated Modular Block Walls*

Modular block walls for cut applications shall only be used in soil deposits that have adequate standup time such that the excavation can be made and the blocks placed without excessive caving or slope failure. The temporary excavation slope required to construct the modular block wall shall be designed in accordance with sections 15-7.3 and 15-7.4. See Section 15-7.6.1.2 for additional special requirements for the design of this type of wall.

15-7.6.2.5 *Braced Cuts*

The special design considerations for soldier pile and sheet pile walls described above shall be considered applicable to braced cuts.

15-7.6.2.6 *Soil Nail Walls*

Design of soil nail walls requires a detailed geotechnical investigation to characterize the reinforced soils and the soil located below the base of excavation. The geotechnical information required for design includes soil stratigraphy, unit weight, shear strength, surcharge loading, foreslope and backslope inclinations, and groundwater conditions. The required information presented in sections 15-3 and 15-5.7 is pertinent to the design of temporary soil nail walls. Easements may be required if the soil nails extend outside the right of way/property boundary.

15-7.6.3 *Uncommon Shoring Systems for Cut Applications*

The following shoring systems require special, very detailed, expert implementation, and will only be allowed either as a special design by the State, or with special approval by the State Geotechnical Engineer and State Bridge Engineer.

- Diaphragm/slurry walls
- Secant pile walls
- Cellular cofferdamsGround freezing
- Deep soil mixing
- Permeation grouting
- Jet grouting

More detailed descriptions of each of these methods and special considerations for their implementation are provided in Appendix 15-F.

15-7.7 Shoring and Excavation Design Submittal Review Guidelines

When performing a geotechnical review of a contractor shoring and excavation submittal, the following items should be specifically evaluated:

1. Shoring System Geometry

    a. Has the shoring geometry been correctly developed, and all pertinent dimensions shown?

    b. Are the slope angle and height above and below the shoring wall shown?

    c. Is the correct location of adjacent structures, utilities, etc., if any are present, shown?

2. Performance Objectives for the Shoring System

    a. Is the anticipated design life of the shoring system identified?

    b. Are objectives regarding what the shoring system is to protect, and how to protect it, clearly identified?

    c. Does the shoring system stay within the constraints at the site, such as the right of way limits, boundaries for temporary easements, etc?

3. Subsurface conditions

    a. Is the soil/rock stratigraphy consistent with the subsurface geotechnical data provided in the contract boring logs?

    b. Did the contractor/shoring designer obtain the additional subsurface data needed to meet the geotechnical exploration requirements for slopes and walls as identified in chapters 10 and 15, respectively, and Appendix 15-F for unusual shoring systems?

    c. Was justification for the soil, rock, and other material properties used for the design of the shoring system provided, and is that justification, and the final values selected, consistent with Chapter 5 and the subsurface field and lab data obtained at the shoring site?

    d. Were ground water conditions adequately assessed through field measurements combined with the site stratigraphy to identify zones of ground water, aquitards and aquicludes, artesian conditions, and perched zones of ground water?

4. Shoring system loading

    a. Have the anticipated loads on the shoring system been correctly identified, considering all applicable limit states?

    b. If construction or public traffic is near or directly above the shoring system, has a minimum traffic live load surcharge of 250 psf been applied?

    c. If larger construction equipment such as cranes will be placed above the shoring system, have the loads from that equipment been correctly determined and included in the shoring system design?

    d. If the shoring system is to be in place longer than three years, have seismic and other extreme event loads been included in the shoring system design?

5. Shoring system design

    a. Have the correct design procedures been used (i.e., the GDM and referenced design specifications and manuals)?

    b. Have all appropriate limit states been considered (e.g., global stability of slopes above and below wall, global stability of wall/slope combination, internal wall stability, external wall stability, bearing capacity, settlement, lateral deformation, piping or heaving due to differential water head)?

6. Are all safety factors, or load and resistance factors for LRFD shoring design, identified, properly justified in a manner that is consistent with the GDM, and meet or exceed the minimum requirements of the GDM?

7. Have the effects of any construction activities adjacent to the shoring system on the stability/performance of the shoring system been addressed in the shoring design (e.g., excavation or soil disturbance in front of the wall or slope, excavation dewatering, vibrations and soil loosening due to soil modification/ improvement activities)?

8. Shoring System Monitoring/Testing

    a. Is a monitoring/testing plan provided to verify that the performance of the shoring system is acceptable throughout the design life of the system?

    b. Have appropriate displacement or other performance triggers been provided that are consistent with the performance objectives of the shoring system?

9. Shoring System Removal

    a. Have any elements of the shoring system to be left in place after construction of the permanent structure is complete been identified?

    b. Has a plan been provided regarding how to prevent the remaining elements of the shoring system from interfering with future construction and performance of the finished work (e.g., will the shoring system impede flow of ground water, create a hard spot, create a surface of weakness regarding slope stability)?

15-8 References

AASHTO, 2002, *Standard Specifications for Highway Bridges*, American Association of State Highway and Transportation Officials, 17th Edition, Washington, D.C., USA.

AASHTO, 2020, *LRFD Bridge Design Specifications*, American Association of State Highway and Transportation Officials, Ninth Edition, Washington, D.C., USA.

AASHTO. 2020. R-69, *Standard Practice for Determination of Long-Term Strength for Geosynthetic Reinforcement*. American Association of State Highway and Transportation Officials, Washington, D.C., USA.

Allen, T. M., and Bathurst, R. J., 2003, *Prediction of Reinforcement Loads in Reinforced Soil Walls*, WSDOT Research Report WA-RD 513.1 WA-RD 522.2, 364 pp.

Allen, T. M, and Bathurst, R. J., 2009, *"Reliability of Geosynthetic Wall Designs and Factors Influencing Wall Performance,"* 4th International GSI-Taiwan Geosynthetics Conference, Pingtung, Taiwan, pp. 95-123.

Allen, T.M. and Bathurst, R.J. 2019. *"Geosynthetic reinforcement stiffness characterization for MSE wall design."* Geosynthetics International 26(6): pp. 592–610 (https://dx.doi.org/10.1680/jgein.19.00041).

Allen, T. M., Bathurst, R. J., Holtz, R. D., Walters, D. L. and Lee, W. F., 2003. "A New Working Stress Method for Prediction of Reinforcement Loads in Geosynthetic Walls," Canadian Geotechnical Journal, Vol. 40, No. 5, pp. 976-994.

Allen, T. M., Bathurst, R. J., Lee, W. F., Holtz, R. D., and Walters, D. L., 2004, "A New Method for Prediction of Loads in Steel Reinforced Walls," *ASCE Journal of Geotechnical and Geo-environmental Engineering*, Vol. 130, No. 11, pp. 1109-1120.

Allen, T.M. and Bathurst, R.J., 2015. Improved simplified method for prediction of loads in reinforced soil walls. *ASCE Journal of Geotechnical and Geoenvironmental Engineering*, 141(11): 04015049.

Allen, T.M. and Bathurst, R.J. 2018. Application of the Simplified Stiffness Method to design of reinforced soil walls. *ASCE Journal of Geotechnical and Geoenvironmental Engineering*, 144(5): 04018024.

Allen, T. M., Nowak, A. S., and Bathurst, R. J., 2005, *Calibration to Determine Load and Resistance Factors for Geotechnical and Structural Design*, Transportation Research Board Circular E-C079, Washington, D.C., 93 p.

Allen, T. M., Christopher, B. R., Elias, V., and DiMaggio, J. D., 2001, *Development of the Simplified Method for Internal Stability Design of Mechanically Stabilized Earth (MSE) Walls*, WSDOT Research Report WA-RD 513.1, 96 pp.

Anderson, P. L., and Sankey, J., 2001, "The Performance of Buried Galvanized Steel Reinforcements after 20 Years in Service," Kyushu 2001, Japan, pp.

Bathurst, R. J., Allen, T. M., and Nowak, A. S., 2008a, "Calibration Concepts for Load and Resistance Factor Design (LRFD) of Reinforced Soil Walls," *Canadian Geotechnical Journal*, Vol. 45, pp. 1377-1392.

Bathurst, R.J., Allen, T.M., Lin, P. and Bozorgzadeh, N. 2019, "LRFD calibration of internal limit states for geogrid MSE walls." *ASCE Journal of Geotechnical and Geoenvironmental Engineering*, 145(11):04019087 (http://dx.doi.org/10.1061/(ASCE)GT.1943-5606.0002124).

Bathurst, R. J., Miyata, Y., Nernheim, A., and Allen, T. M., 2008b, "Refinement of K-stiffness Method for Geosynthetic Reinforced Soil Walls," Geosynthetics International, Vol. 15, No. 4, pp. 269-295.

Bathurst, R. J., Nernheim, A., and Allen, T. M., 2009. "Predicted Loads in Steel Reinforced Soil Walls Using the AASHTO Simplified Method," ASCE Journal of Geotechnical and Geoenvironmental Engineering, Vol. 135, No. 2, pp. 177-184.

Berg, R. R., Christopher, B. R., and Samtani, N. C., 2009, *Design of Mechanically Stabilized Earth Walls and Reinforced Slopes*, No. FHWA-NHI-10-024, Federal Highway Administration, 306 pp.

Bligh, R. P., Briaud, J.-L., Kim, K. M., and Abu-Odeh, A., 2010, *Design of Roadside Barrier Systems Placed on MSE Retaining Walls*, NCHRP Report 663, Transportation Research Board, Washington, D.C., 195 pp.

Bolton, M. D. 1986, "The Strength and Dilatancy of Sands," Geotechnique, Vol. 36, No. 1, pp. 65-78.

Chugh, A. K., 1995, "A Unified Procedure for Earth Pressure Calculations," Proceedings: Third International Conference on Recent Advances in Geotechnical Earthquake Engineering and Soil Dynamics, Vol. III, St. Luis, Missouri.

Elias, V., Fishman, K.L., Christopher, B. R., and Berg, R. R., 2009, *Corrosion/Degradation of Soil Reinforcements for Mechanically Stabilized Earh Walls and Reinforced Soil Slopes*, No. FHWA-NHI-09-087, Federal Highway Administration, 144 pp.

Jewell, R. A., and Wroth, C. P., 1987, "Direct Shear Tests on Reinforced Sand," Geotechnique, Vol. 37, No. 1, pp. 53-68.

Lade and Lee, 1976, "Engineering Properties of Soils," *Report UCLA-ENG-7652*, 145 pp. [As cited by Holtz and Kovacs (1981)].

Lazarte, C. A., Robinson, H., Gomez, J. E., Baxter, A., Cadden, A., and Berg, R., 2015. *Geotechnical Engineering Circular No. 7, Soil Nail Walls – Reference Manual*, U.S. Department of Transportation, Federal Highway Administration, FHWA-NHI-14-007, 425 pp.

Leshchinsky, D., Leshchinsky, B., and Leshchinsky, O., 2017, "Limit State Design Framework for Geosynthetic-Reinforced Soil Structures," *Geotextiles and Geomembranes*, No. 45, pp. 642-652, DOI: http://dx.doi.org/10.1016/j.geotexmem.2017.08.005.

Leshchinsky, D., Leshchinsky, O., Zelenko, B., and Horne, J., 2016, *Limit Equilibrium Design Framework for MSE Structures with Extensible Reinforcement*, FHWA-HIF-17-004, Federal Highway Administration, Office of Bridge Technology, Washington DC. Contract No. DTFH6114D00 ttps:// www.fhwa.dot.gov/engineering/geotech/pubs/hif17004.pdf.

Mack, D.A., Sanders, S.H., Millhone, W.L., Fippin, R.L., and Kennedy, D.G., 2006. *Rockery Design and Construction Guidelines*, FHWA Manual No. FHWA-CFL/TD-06- 006, 178 pp.

Miyata, Y., Bathurst, R.J. and Allen, T.M. 2018. Evaluation of tensile load model accuracy for PET strap MSE walls. Geosynthetics International 25(6): 656-671.

Miyata, Y., Bathurst, R. J. and Allen, T. M., 2019. "Calibration of PET Strap Pullout Models using a Statistical Approach," *Geosynthetics International* _(online) http://dx.doi.org/10.1680/jgein.19.00026.

Morrison, K. F., Harrison, F. E., Collin, J. G., Dodds, A., and Arndt, B., 2006. *Shored Mechanically Stabilized Earth (SMSE) Wall Systems*, Technical Report, Federal Highway Administration, Washington, D.C., Report No. FHWA-CFL/TD-06-001, 212 pp.

NAVFAC, 1982, *Design Manual: Foundations, and Earth Structures*, DM-7.2.

NTPEP (2019). National Transportation Product Evaluation Program (NTPEP) DataMine – Geosynthetic Reinforcement (REGEO). American Association of State Highway and Transportation Officials (AASHTO), Washington, DC, USA. See "https://data.ntpep.org/REGEO/Products" https://data.

Porterfield, J. A., Cotton, D. A., Byrne, R. J., 1994, *Soil Nail Walls-Demonstration Project 103*, *Soil Nailing Field Inspectors Manual*, U.S. Department of Transportation, Federal Highway Administration, FHWA-SA-93-068, 86 pp.

Sabatini, P. J., Pass, D. G., and Bachus, R. C., 1999, *Geotechnical Engineering Circular No. 4*, *Ground Anchors and Anchored Systems*, FHWA-IF-99-015, 281 pp.

Samtani, N. C., and Nowatzki, E. A., 2006, *Soils and Foundations*, *Reference Manual-Volumes I and II*, Washington, D.C., National Highway Institute Publication, FHWA-NHI-06-088/089, Federal Highway Administration.

Santamarina, J. C., Altschaeffl, A. G., and Chameau, J. L., 1992, "Reliability of Slopes: Incorporating Qualitative Information," Transportation Research Board, TRR 1343, Washington, D.C., pp. 1-5.

Schlosser, F., 1978, "History, Current Development, and Future Developments of Reinforced Earth," Symposium on Soil Reinforcing and Stabilizing Techniques, sponsored by New South Wales Institute of Technology and the university of Sidney, Austrailia.

Schlosser, F., and Segrestin, P., 1979, "Dimensionnement des Ouvrages en Terre Armee par la Methode de l'Equilibre Local," International Conference on Soil Reinforcement: Reinforced Earth and Other Techniques, Paris, Vol. 1, pp. 157-162.

Terre Armee, 1979, *Experimental Wall Pushed to Break by Corrosion of the Reinforcements*, TAI Research Report R12.

US Department of Defense, 2005, *Soil Mechanics*, Unified Facilities Criteria (UFC), UFC 3-220-10N.

Vahedifard, F., Leshchinsky, B.A., Sehat, S. and Leshchinsky, D. 2014. Impact of cohesion on seismic design of geosynthetic-reinforced earth structures. ASCE Journal of Geotechnical and Geoenvironmental Engineering, 04014016, 12 p.

Vahedifard, F., Mortezaei, K., Leshchinsky, B. A., Leshchinsky, D. and Lu, N. 2016. Role of suction stress on service state behavior of geosynthetic-reinforced soil structures. Transportation Geotechnics 8: 45-56.

15-9 Appendices

Appendix 15-A	Preapproved Proprietary Wall and Reinforced Slope General Design Requirements and Responsibilities
Appendix 15-B	Preapproved Proprietary Wall/Reinforced Slope Design and Construction Review Checklist
Appendix 15-C	Wall/Reinforced Slope Systems Evaluation: Submittal Requirements
Appendix 15-D	Preapproved Proprietary Wall Systems
Appendix 15-E	MSE Wall Design Using the Stiffness Method
Appendix 15-F	Description of Typical Temporary Shoring Systems and Selection Considerations
Appendix 15-G	Testing and Acceptance Protocols for Tiebacks in Clay
Appendix 15-H	Preapproved Wall Appendix: Specific Requirements and Details for Hilfiker Welded Wire Faced Walls
Appendix 15-I	Preapproved Wall Appendix: Specific Requirements and Details for Eureka Reinforced Soil Concrete Panel Walls
Appendix 15-J	Preapproved Wall Appendix: Specific Requirements and Details for Reinforced Earth (RECO) Concrete Panel Walls
Appendix 15-K	Preapproved Wall Appendix: Specific Requirements and Details for Tensar ARES Walls
Appendix 15-L	Preapproved Wall Appendix: Specific Requirements and Details for Tensar MESA Walls
Appendix 15-M	Preapproved Wall Appendix: Specific Requirements and Details for Tensar Welded Wire Form Walls
Appendix 15-N	Preapproved Wall Appendix: Specific Requirements and Details for SSL Concrete Panel Walls
Appendix 15-O	Preapproved Wall Appendix: Specific Requirements and Details for Landmark Reinforced Soil Wall
Appendix 15-P	Preapproved Wall Appendix: Specific Requirements and Details for Allan Block Walls
Appendix 15-Q	Preapproved Wall Appendix: Specific Requirements and Details for Redi-Rock Positive Connection Walls
Appendix 15-R	Preapproved Wall Appendix: Specific Requirements and Details for Lock and Load Walls
Appendix 15-S	Preapproved Wall Appendix: Specific Requirements and Details for KeyGrid Walls
Appendix 15-T	Preapproved Wall Appendix: Specific Requirements and Details for Basalite GEOWALL

Appendix 15-A Preapproved Proprietary Wall and Reinforced Slope General Design Requirements and Responsibilities

15-A-1 Design Requirements

Wall design shall be in accordance with the Geotechnical *Design Manual* (GDM), the LRFD *Bridge Design Manual* (BDM), and the AASHTO LRFD Specifications. Where there are differences between the requirements in the GDM and the AASHTO LRFD Specifications, this manual shall be considered to have the highest priority. Note that since a LRFD design method for reinforced slopes is currently not available, the allowable stress design method provided in Berg, et al. (2009) shall be used for reinforced slopes, except that geosynthetic reinforcement long-term nominal strength shall be determined in accordance with AASHTO R 69.

The wall/reinforced slope shall be designed for a minimum life of 75 years, unless otherwise specified by the State. All wall/reinforced slope components shall be designed to provide the required design life.

15-A-2 Design Responsibilities

The geotechnical designer shall determine if a preapproved proprietary wall system is suitable for the wall site. The geotechnical designer shall be responsible for design of the wall for external stability (sliding, overturning, and bearing), compound stability, and overall (global) stability of the wall. The wall/reinforced slope supplier shall be responsible to design the wall for internal stability (structural failure of wall/reinforced slope components including the soil reinforcement, facing, and facing connectors to the reinforcement, and pullout), for all applicable limit states (as a minimum, serviceability, strength and extreme event). The wall supplier shall also be responsible to design the traffic barrier (all walls) and the distribution of the impact load into the soil reinforcement (MSE walls) in accordance with the AASHTO LRFD *Bridge Design Manual* and as specified in the GDM and BDM. The wall or reinforced slope supplier, or the supplier's consultant, performing the geotechnical design of the structure shall be performed by, or under the direct supervision of, a civil engineer licensed to perform such work in the state of Washington, who is qualified by education or experience in the technical specialty of geotechnical engineering per WAC 196-27A-20. Final designs and plan sheets produced by the wall supplier shall be certified (stamped) in accordance with the applicable RCWs and WACs and as further specified in this manual (see chapters 1 and 23).

The design calculation and working drawing submittal shall be as described in *Standard Specifications* Section 6.13.3(2). All computer output submitted shall be accompanied by supporting hand calculations detailing the calculation process, unless the computer program MSEW 3.0 supplied by ADAMA Engineering, Inc., is used to perform the calculations, in which case supporting hand calculations are not required.

Overall stability and compound stability as defined in the AASHTO LRFD Specifications is the responsibility of the geotechnical designer of record for the project. The geotechnical designer of record shall also provide the settlement estimate for the wall and the estimated bearing resistance available for all applicable limit states. If settlement

is too great for the wall/reinforced slope supplier to provide an acceptable design, the geotechnical designer of record is responsible to develop a mitigation design in accordance with this manual during contract preparation to provide adequate bearing resistance, overall stability, and acceptable settlement magnitude to enable final design of the structure. The geotechnical designer of record shall also be responsible to provide the design properties for the wall/reinforced slope backfill, retained fill, and any other properties necessary to complete the design for the structure, and the peak ground acceleration for seismic design. Design properties shall be determined in accordance with Chapter 5. The geotechnical designer of record is responsible to address geologic hazards resulting from earthquakes, landslides, and other geologic hazards as appropriate. Mitigation for seismic hazards such as liquefaction and the resulting instability shall be done in accordance with Chapter 6. The geotechnical designer of record shall also provide a design to make sure that the wall/reinforced slope is adequately drained, considering ground water, infiltration from rainfall and surface runoff, and potential flooding if near a body of surface water, and considering the ability of the structure backfill material to drain.

15-A-3 Limits of Preapproved Wall/Reinforced Slope Designs

Preapproved wall design is intended for routine design situations where the design specifications (e.g., AASHTO, GDM, and BDM) can be readily applied. Whether or not a particular design situation is within the limits of what is preapproved also depends specifically on what plan details the proprietary wall supplier has submitted to WSDOT for approval. See the GDM preapproved wall appendices for details. In general, all the wall systems are preapproved up to the wall heights indicated in Appendix 15-D, and are also preapproved for use with traffic barriers, guardrail, hand rails, fencing, and catch basins placed on top of the wall. Preapproval regarding culvert penetration through the wall face and obstruction avoidance details varies with the specific wall system, as described in the GDM preapproved wall appendices.

In general, design situations that are not considered routine nor preapproved are as follows:

- Very tall walls, as defined for each wall system in Appendix 15-D.
- Vertically stacked or stepped walls, unless the step is less than or equal to 5 percent of the combined wall height, or unless the upper wall is completely behind the back of the lower wall, i.e., (for MSE walls, the back of the soil reinforcement) by a distance equal to the height of the lower wall.
- Back-to-back MSE walls, unless the distance between the backs of the walls (i.e., the back of the soil reinforcement layers) is 50 percent of the wall height or more.
- In the case of MSE walls and reinforced slopes, any culvert or other conduit that has a diameter which is greater than the vertical spacing between soil reinforcement layers, and which does not come through the wall at an angle perpendicular to the wall face and parallel to the soil reinforcement layers, unless otherwise specified in the GDM preapproved wall appendix for a specific wall system.
- If the wall or reinforced slope is supporting structure foundations, other walls, noise walls, signs or sign bridges, or other types of surcharge loads. The wall or reinforced slope is considered to support the load if the surcharge load is located within a 1H:1V slope projected from the bottom of the back of the wall, or reinforced soil zone in the case of reinforced soil structures.

- Walls in which bridge or other structure deep foundations (e.g., piles, shafts, micropiles) must go through or immediately behind the wall.
- Any wall design that uses a wall detail that has not been reviewed and preapproved by WSDOT.

Backfill Selection and Effect on Soil Reinforcement Design – Backfill selection shall be based on the ability of the material to drain and the drainage design developed for the wall/reinforced slope, and the ability to work with and properly compact the soil in the anticipated weather conditions during backfill construction. Additionally, for MSE walls and reinforced slopes, the susceptibility of the backfill reinforcement to damage due to placement and compaction of backfill on the soil reinforcement shall be taken into account with regard to backfill selection.

Minimum requirements for backfill used in the reinforced zone of MSE walls and reinforced slopes are provided in the WSDOT *Standard Specifications* Section 9-03.14(4). If the wall backfill is exposed to tidal influence or other water conditions that result in significant water level changes within the reinforced soil backfill, a free draining backfill shall be used as described in Section 15.3.7.

For reinforced soil slopes, the gradation requirements in WSDOT *Standard Specifications* Section 9-03.14(4) shall be used, but modified to require the percent passing a No. 200 sieve of between 7 and 12 percent, and the minimum SE reduced to 15. Based on experience, for typical reinforced slopes, it is difficult to compact slopes with cleaner soils as well as to prevent erosion of the slope face while the slope vegetation is becoming established. However, due to the greater fines content, the reinforced soil is likely to drain more slowly than the MSE wall backfill, which should be considered in the reinforced slope design, depending on the anticipated seepage into the reinforced backfill.

All material within the reinforced zone of MSE walls, and also within the bins of prefabricated bin walls, shall be substantially free of shale or other soft, poor durability particles, and shall not contain recycled materials, such as glass, shredded tires, portland cement concrete rubble, or asphaltic concrete rubble, nor shall it contain chemically active or contaminated soil such as slag, mining tailings, or similar material.

The corrosion criteria provided in the AASHTO LRFD Specifications for steel reinforcement in soil are applicable to soils that meet the following criteria:

- pH = 5 to 10 (AASHTO T289)
- Resistivity ≥ 3000 ohm-cm (AASHTO T288)
- Chlorides ≤ 100 ppm (AASHTO T291)
- Sulfates ≤ 200 ppm (AASHTO T290)
- Organic Content ≤ 1 percent (AASHTO T267)

If the resistivity is greater than or equal to 5000 ohm-cm, the chlorides and sulfates requirements may be waived.

For geosynthetic reinforced structures, the approved products and values of T_{al} in the Qualified Products List (QPL) are applicable to soils meeting the following requirements, unless otherwise noted in the QPL or special provisions:

- Soil pH (determined by AASHTO T289) = 4.5 to 9 for permanent applications and 3 to 10 for temporary applications.

- Maximum soil particle size ≤ 1.25 inches, unless full scale installation damage tests are conducted in accordance with AASHTO R 69 so that the design can take into account the potential greater degree of damage.

Soils used for MSE walls and reinforced slopes shall meet the requirements provided above.

15-A-4 MSE Wall Facing Tolerances

The design of the MSE wall (precast panel faced, and welded wire faced, with or without a precast concrete, cast-in-place concrete, or shotcrete facia placed after wall construction) shall result in a constructed wall that meets the following tolerances:

1. Deviation from the design batter and horizontal alignment, when measured along a 10 feet straight edge, shall not exceed the following:

   a. Welded wire faced structural earth wall: 2 inches

   b. Precast concrete panel and concrete block faced structural earth wall: ¾ inch

2. Deviation from the overall design batter of the wall shall not exceed the following per 10 feet of wall height:

   a. Welded wire faced structural earth wall: 1.5 inches

   b. Precast concrete panel and concrete block faced structural earth wall: ½ inch

3. The maximum outward bulge of the face between welded wire faced structural earth wall reinforcement layers shall not exceed 2 inches. The maximum allowable offset in any precast concrete facing panel joint shall be ¾ inch. The maximum allowable offset in any concrete block joint shall be ⅜ inch.

The design of the MSE wall (geosynthetic wrapped face, with or without a precast concrete, cast-in-place concrete, or shotcrete facia placed after wall construction) shall result in a constructed wall that meets the following tolerances:

Description of Criteria	Permanent Wall	Temporary Wall
Deviation from the design batter and horizontal alignment for the face when measured along a 10 feet straight edge at the midpoint of each wall layer shall not exceed:	3 inches	5 inches
Deviation from the overall design batter per 10 feet of wall height shall not exceed:	2 inches	3 inches
Maximum outward bulge of the face between backfill reinforcement layers shall not exceed:	4 inches	6 inches

15-A-5 References

AASHTO. 2015. R-69, Standard Practice for Determination of Long-Term Strength for Geosynthetic Reinforcement. American Association of State Highway and Transportation Officials, Washington, D.C., USA.

Berg, R. R., Christopher, B. R., and Samtani, N. C., 2009, *Design of Mechanically Stabilized Earth Walls and Reinforced Slopes*, No. FHWA-NHI-10-024, Federal Highway Administration, 306 pp.

Appendix 15-B Preapproved Proprietary Wall/Reinforced Slope Design and Construction Review Checklist

The review tasks provided herein have been divided up relative to the various aspects of wall and reinforced slope design and construction. These review tasks have not been specifically divided up between those tasks typically performed by the geotechnical reviewer and those tasks typically performed by the structural reviewer. However, to better define the roles and responsibilities of each office, following each task listed below, either GT (geotechnical designer), ST (structural designer), or both are identified beside each task as an indicator of which office is primarily responsible for the review of that item.

Review contract plans, special provisions, applicable *Standard Specifications*, any contract addendums, the appendix to Chapter 15 for the specific wall system proposed in the shop drawings, and Appendix 15A as preparation for reviewing the shop drawings and supporting documentation. Also review the applicable AASHTO design specifications and Chapter 15 as needed to be fully familiar with the design requirements. If a HITEC report is available for the wall system, it should be reviewed as well.

The shop drawings and supporting documentation should be quickly reviewed to determine whether or not the submittal package is complete. Identify any deficiencies in terms of the completeness of the submittal package. The shop drawings should contain wall plans for the specific wall system, elevations, and component details that address all of the specific requirements for the wall as described in the contract. The supporting documentation should include calculations supporting the design of each element of the wall (i.e., soil reinforcement density, corrosion design, connection design, facing structural design, external wall stability, special design around obstructions in the reinforced backfill, etc., and example hand calculations demonstrating the method used by any computer printouts provided and that verify the accuracy of the computer output. The contract will describe specifically what is to be included in the submittal package.

The following geotechnical design and construction issues should be reviewed by the geotechnical designer (GT) and/or structural designer (ST) when reviewing proprietary wall/reinforced slope designs:

1. External stability design

    a. Are the structure dimensions, and design cross-sections, in the wall/reinforced slope supplier's plan consistent with the contract requirements and geotechnical design? As a minimum, check wall/slope base width, embedment depth, and face batter in comparison to the geotechnical external stability design. (GT, ST).

    b. Have the design documents and plan details been certified in accordance with this manual? (GT, ST)

2. Internal stability design

   a. Has the correct, and agreed upon, design procedure been used (i.e., as specified in the GDM, BDM, and AASHTO LRFD Specifications), including the correct earth pressures and earth pressure coefficients? (GT)

   b. Has appropriate load group for each limit state been selected? (GT, ST)

      i. In general, with the exception of the Stiffness Method described in Section 15.5.3.10.3.1 the service limit state is not specifically checked for internal stability.

      ii. Strength I should be used for the strength limit state, unless an owner specified vehicle is to be used, in which case Strength II should also be checked.

      iii. Extreme Event I should be used for seismic design.

      iv. Extreme Event II should be used for scour design.

   c. Have the correct load factors been selected (see GDM, BDM and the AASHTO LRFD Specifications)? Note that for reinforced slopes, since LRFD procedures are currently not available, load factors are not applicable to reinforced slope design. (GT, ST)

   d. Has live load been treated correctly regarding magnitude (in general, approximated as 2 feet of soil surcharge load) and location (over reinforced zone for bearing, behind reinforced zone for sliding and overturning)? (GT, ST)

   e. Have the effects of any external surcharge loads, including traffic barrier impact loads, been taken into account in the calculation of load applied internally to the wall reinforcement and other elements? (GT, ST)

   f. Has the correct PGA been used for seismic design for internal stability? (GT)

   g. Have the correct resistance factors been selected for design for each limit state? For reinforced slopes, since LRFD design procedures are currently not available, check to make sure that the correct safety factors have been selected. (GT)

   h. Have the correct reinforcement and connector properties been used?

      i. For steel reinforcement, have the steel reinforcement dimensions and spacing been identified? (GT, ST)

      ii. For steel reinforcement, has it been designed for corrosion using the correct corrosion rates, correct design life (75 years, unless specified otherwise in the contract documents)? (GT, ST)

      iii. Have the steel reinforcement connections to the facing been designed for corrosion, and has appropriate separation between the soil reinforcement and the facing concrete reinforcement been done so that a corrosion cell cannot occur, per the AASHTO LRFD Specifications? (GT, ST)

iv. For geosynthetic reinforcement products selected, are the long-term design nominal strengths, T_{al}, used for design consistent with the values of T_{al} provided in the Qualified Products List (QPL) and consistent with the products approved for the particular wall system in this GDM. (GT)

v. Are the soil reinforcement - facing connection design parameters used consistent with the connection plan details provided? For steel reinforced systems, such details include the shear resistance of the connection pins or bolts, bolt hole sizes, etc. For geosynthetic reinforced systems, such details include the type of connection, and since the connection strength is specific to the reinforcement product (i.e., product material, strength, and type) – facing unit (i.e., material type and strength, and detailed facing unit geometry) combination, and the specific type of connector used, including material type and connector geometry, as well as how it fits with the facing unit. Check to make sure that the reinforcement – facing connection has been previously approved and that the approved design properties have been used. (GT, ST)

vi. If a coverage ratio, Rc, of less than 1.0 is used for the reinforcement, and its connection to the facing, has the facing been checked to see that it is structurally adequate to carry the earth load between reinforcement connection points without bulging of facing units, facing unit distress, or overstressing of the connection between the facing and the soil reinforcement? (GT, ST)

vii. Are the facing material properties used by the wall supplier consistent with what is required to produce a facing system that has the required design life and that is durable in light of the environmental conditions anticipated? Have these properties been backed up with appropriate supporting test data? Is the facing used by the supplier consistent with the aesthetic requirements for the project? (GT, ST)

i. Check to make sure that the following limit states have been evaluated, and that the wall/reinforced slope internal stability meets the design requirements:

i. Reinforcement resistance in reinforced backfill (strength and extreme event) (GT)

ii. Reinforcement resistance at connection with facing (strength and extreme event) (GT, ST)

iii. Reinforcement pullout (strength and extreme event) (GT)

iv. If the Stiffness Method is used, soil failure at the strength limit state (GT)

j. If obstructions such as small structure foundations, culverts, utilities, etc., must be placed within the reinforced backfill zone (primarily applies to MSE walls and reinforced slopes), has the design of the reinforcement placement, density and strength, and the facing configuration and details, to accommodate the obstruction been accomplished in accordance with the GDM, BDM, and AASHTO LRFD Specifications? (GT, ST)

k. Has the computer output for internal stability been hand checked to verify the accuracy of the computer program calculations (compare hand calculations to the computer output; also, a spot check calculation by the reviewer may also be needed if the calculations do not look correct for some reason)? (GT)

l. Have the specific requirements, material properties, and plan details relating to internal stability specified in the sections that follow in this Appendix for the specific wall/reinforced slope system been used? (GT, ST)

m. Note that for structural wall facings for MSE walls, design of prefabricated modular walls, and design of other structural wall systems, a structural design and detail review must be conducted by the structural reviewer (for WSDOT, the Bridge and Structures Office conducts this review in accordance with the BDM and the AASHTO LRFD Specifications). (ST)

   i. Compare preapproved wall details to the shop drawing regarding the concrete facing panel dimensions, concrete cover, rebar size, orientation and location. This also applies to any other structural elements of the wall (e.g., steel stiffeners for welded wire facings, concrete components of modular walls whether reinforced or not, etc.). (ST)

   ii. Is a quantity summary of components listed for each wall? (ST)

   iii. Do the geometry and dimensions of any traffic barriers or coping shown on shop drawings match with what is required by contract drawings (may need to check other portions of contract plans for verification (i.e. paving plans)? Has the structural design and sizing of the barrier/reaction slab been done consistently with the AASHTO specifications and BDM? Are the barrier details constructable? (ST)

   iv. Do notes in the shop drawings state the date of manufacture, production lot number, and piece mark be marked clearly on the rear face of each panel (if required by special the contract provisions)? (ST)

3. Wall/slope construction sequence and requirements provided in shop drawings

   a. Make sure construction sequence and notes provided in the shop drawings do not conflict with the contract specifications (e.g., minimum lift thickness, compaction requirements, construction sequence and details, etc.). Any conflicts should be pointed out in the shop drawing review comments, and such conflicts should be discussed during the precon meeting with the wall supplier, wall constructor, and prime contractor for the wall/slope construction. (GT, ST)

   b. Make sure any wall/slope corner or angle point details are consistent with the preapproved details and the contract requirements, both regarding the facing and the soil reinforcement. This also applies to overlap of reinforcement for back-to-back walls (GT, ST)

4. Wall and reinforced slope construction quality assurance

    a. Discuss all aspects of the wall/slope construction and quality assurance activities at the wall/reinforced preconstruction meeting. The preconstruction meeting should include representatives from the wall supplier and related materials suppliers, the earthwork contractor, the wall constructor, the prime contractor, the project inspection and construction administration staff, and the geotechnical and structural reviewers/designers. (GT, ST, and region project office)

    b. Check to make sure that the correct wall or reinforced slope elements, including specific soil reinforcement products, connectors, facing blocks, etc., are being used to construct the wall (visually check identification on the wall elements). For steel systems, make sure that reinforcement dimensions are correct, and that they have been properly galvanized. (region project office)

    c. Make sure that all wall elements are not damaged or otherwise defective. (region project office)

    d. Make sure that all materials certifications reflect what has been shipped to the project and that the certified properties meet the contract/design requirements. Also make sure that the identification on the wall elements shipped to the site match the certifications. Determine if the date of manufacture, production lot number, and piece mark on the rear face of each panel match the identification of the panels shown on the shop drawings (if req. by special prov.) (region project office)

    e. Obtain samples of materials to be tested, and compare test results to project minimum requirements. Also check dimensional tolerances of each wall element. (region project office)

    f. Make sure that the wall backfill meets the design/contract requirements regarding gradation, ability to compact, and aggregate durability. (region project office)

    g. Check the bearing pad elevation, thickness, and material to make sure that it meets the specifications, and that its location relative to the ground line is as assumed in the design. Also check to make sure that the base of the wall excavation is properly located, and that the wall base is firm. (region project office)

    h. As the wall is being constructed, make sure that the right product is being used in the right place. For soil reinforcement, make sure that the product is the right length, spaced vertically and horizontally correctly per the plans, and that it is placed and pulled tight to remove any slack or distortion, both in the backfill and at the facing connection. Make sure that the facing connections are properly and uniformly engaged so that uneven loading of the soil reinforcement at the facing connection is prevented. (region project office)

    i. Make sure that facing panels or blocks are properly seated on one another as shown in the wall details. (region project office)

j. Check to make sure that the correct soil lift thickness is used, and that backfill compaction is meeting the contract requirements. (region project office)

k. Check to make sure that small hand compactors are being used within 3 feet of the face. Reduced lift thickness should be used at the face to account for the reduced compaction energy available from the small hand compactor. The combination of a certain number of passes and reduced lift thickness to produce the required level of compaction without causing movement or distortion to the facing elements should be verified at the beginning of wall construction. For MSE walls, compaction at the face is critical to keeping connection stresses and facing performance problems to a minimum. Check to make sure that the reinforcement is not connected to the facing until the soil immediately behind the facing elements is up to the level of the reinforcement after compaction. Also make sure that soil particles do not spill over on to the top of the facing elements. (region project office)

l. Make sure that drainage elements are placed properly and connected to the outlet structures, and at the proper grade to promote drainage. (region project office)

m. Check that the wall face embedment is equal to or greater than the specified embedment. (region project office)

n. Frequently check to determine if wall face alignment, batter, and uniformity are within tolerances. Also make sure that acceptable techniques to adjust the wall face batter and alignment are used. Techniques that could cause stress to the reinforcement/facing connections or to the facing elements themselves, including shimming methods that create point loads on the facing elements, should not be used. (region project office)

o. For reinforced slopes, in addition to what is listed above as applicable, check to make sure that the slope facing material is properly connected to the soil reinforcement. Also check that secondary reinforcement is properly placed, and that compaction out to the slope surface is accomplished. (region project office)

Appendix 15-C Wall/Reinforced Slope Systems Evaluation: Submittal Requirements

15-C-1 Instructions

The submittal requirements outlined below are intended to cover multiple wall types. Some items may not apply to certain wall types. If a wall system has special material or design requirement not covered in the list below, the WSDOT Bridge Design Office and the WSDOT Geotechnical Office should be contacted prior to submittal to discuss specific requirements.

To help WSDOT understand the functioning and performance of the technology and thereby facilitate the Technical Audit, Applicants are urged to spend the time necessary to provide clear, complete and detailed responses. A response on all items that could possibly apply to the system or its components, even those where evaluation protocol has not been fully established, would be of interest to WSDOT. Any omissions should be noted and explained.

The submittal should be provided electronically to facilitate distribution within WSDOT for review purposes (e.g., as a PDF). Responses should be organized in the order shown and referenced to the given numbering system. Additionally, duplication of information is not needed or wanted. A simple statement referencing another section is adequate.

If the wall system has been reviewed and a report produced through the IDEA program or HITEC (if the HITEC report is still relevant to the submitted wall system), please indicate so and provide an electronic copy of the report(s). It is likely that much of what is contained in those reports will meet the submittal requirements provided below. If that is the case, please indicate that is the case, and indicate where in the IDEA or HITEC report the requested submittal information can be found.

15-C-2 Part One: Wall System Overview

Provide an overview of the wall system. Product brochures will usually fulfill the requirements of this section.

15-C-3 Part Two: Plan Details

As a minimum, provide the following plan sheet details:

1. All system component details.
2. Typical plan, profile, and section views.
3. Details that show the facing batter(s) that can be obtained with the wall system (example details that illustrate the permissible range are acceptable).
4. Corner details
   - Acute inside corner
   - Obtuse inside corner
   - Orthogonal inside corner
   - Obtuse outside corner
   - Orthogonal outside corner

5. Radius Details (inside and outside radii, include system limitations).
   - Inside radii
   - Outside radii
   - System limitations for inside and outside radii
6. Traffic barrier systems
   - Guardrail
   - Moment slab barrier
7. Horizontal obstruction details for obstructions
   - Horizontal obstructions up to 24 inches oriented parallel to the wall face
   - Horizontal obstructions up to 48 inches oriented perpendicular to the wall face
8. Vertical obstruction details for obstructions up to 48 inches.
9. Culvert Penetration
   - Up to 48 inch culverts oriented perpendicular to the wall face.
   - Up to 24 inch culverts oriented up to a 45 degree skew angle as measured from perpendicular to the wall face.
10. Leveling pad details in accordance with Section 6-13 of the WSDOT *Standard Specifications for Road, Bridge, and Municipal Construction*.
    - Minimum dimensions
    - Steps
    - Corners
11. Coping and gutter details.

All plan sheet details should be provided as 11×17 size, hard or electronic copies. All dimensions shall be given in English Units (inches and feet). The plan sheet shall as a minimum identify the wall system, an applicable sheet title, the date the plan sheet was prepared, and the name of the engineer and company responsible for its preparation.

15-C-4 Part Three: Materials and Material Properties

WSDOT has established material requirements for certain non-proprietary wall components. These requirements are described in the *Standard Specifications for Road, Bridge, and Municipal Construction*, and General Special Provisions (GSP) available at www.wsdot.wa.gov/design/projectdev/gspamendments.htm. Specifically, GSP 130201. GB6 covers welded wire faced structural earth wall materials, GSP 130202.GB covers precast concrete panel faced structural earth wall materials, and GSP 130203. GB6 covers concrete block faced structural earth wall materials. All wall components falling into the categories currently defined by WSDOT should meet the WSDOT material requirements.

For materials not currently covered by WSDOT specifications, provide material specifications describing the material type, quality, certifications, lab and field testing, acceptance and rejection criteria along with support information for each material items. Include representative test results (lab and/or field) clearly referencing the date, source and method of test, and, where required, the method of interpretation and/or extrapolation. Along with the source of the supplied information, include a listing of facilities normally used for testing (i.e., in-house and independent).

All geosynthetic reinforced wall systems shall use a soil reinforcement product listed in the WSDOT Qualified Product List (QPL). Inclusion of geosynthetic reinforcement products on the QPL will be a necessary prerequisite to wall system approval.

1. For facing units, provide the following information:
   - Standard dimensions and tolerances
   - Joint sizes and details
   - Facing unit to facing unit shear resistance
   - Bearing pads (joints)
   - Spacers
   - Connectors (pins, etc.)
   - Joint filler requirements: geotextile or graded granular
   - Other facing materials, such as for reinforced slopes, or other materials not specifically identified above

2. For the soil reinforcement (applies to structural earth walls and reinforced slopes), provide the following information:
   - Manufacturing sizes, tolerances, lengths
   - Ultimate and yield strength for metallic reinforcement
   - Corrosion resistance test data for metallic reinforcement (for metallic materials other than those listed in the GSP's)
   - Pullout interaction coefficients for WSDOT Gravel Borrow (*Standard Specification* Section 9-03.14(4)), or similar gradation, if default pullout requirements in the AASHTO *LRFD Bridge Design Specifications* are not used or are not applicable.

3. For the connection between the facing units and the soil reinforcements (applies to structural earth walls and reinforced slopes), provide the following information:
   - Photographs/drawings that illustrate the connection
   - Ultimate connection strength, $T_{ultconn}$, at various confining pressures up to the anticipated preapproved wall height (typically 33 ft or less) for each reinforcement product, connection type, and facing unit, and connection test specific reinforcement strength, T_{lot}, for all connection tests.
   - Provide connection data in an editable format using the table below:

Facing Unit	Geogrid Product	Wall Height, H (ft)	Normal Load, N (lbs/ft)	$T_{ultconn}$ (lbs/ft)	T_{lot} (lbs/ft)
		Provide range of H for which each $T_{ultconn}$ equation applies	Provide range of N for which each $T_{ultconn}$ equation applies	Provide regression equation(s) here	

4. For the coping, provide the following information:
   - Dimensions and tolerances
   - Material used (including any reinforcement)
   - Method/details to attach coping to wall top

5. For the traffic railing/barrier, provide the following information:
   - Dimensions of precast and cast-in-place barriers and reaction slabs
   - How barrier/railing is placed on/in and/or attached to wall top
   - How guard railing is placed on/in and/or attached to wall top

6. Regarding the quality control/quality assurance of the wall system material suppliers, provide the following information:
   - QC/QA for metallic or polymeric reinforcement
   - QC/QA for facing materials and connections
   - QC/QA for other wall components
   - Backfill (unit core fill, facing backfill, etc.)

15-C-5 Part Four: Design

Walls shall be designed in conformance with the WSDOT *Geotechnical Design Manual* (GDM), LRFD *Bridge Design Manual* (BDM), and the AASHTO *LRFD Bridge Design Specifications*. Provide design assumptions and procedures with specific references (e.g., design code section) for each of the design requirements listed below. Clearly show any deviations from the GDM, LRFD BDM and the AASHTO *LRFD Bridge Design Specifications*, along with theoretical or empirical information which support such deviations. In general, proprietary wall suppliers will only be responsible for internal stability of their wall system. However, if there are any special external stability considerations for the wall system, those special considerations should be identified and explained in the wall system submittal.

Provide detailed design calculations for a 25 feet high wall with a 2H:1V sloping soil surcharge (extending from the back face of the wall to an infinite distance behind the wall). The calculations should address the technical review items listed below. The calculations shall include detailed explanations of any symbols, design input, materials property values, and computer programs used in the design of the walls. The example designs shall be completed with seismic forces (assume a PGA of 0.50g). In addition, a 25 feet high example wall shall be performed with no soil surcharge and a traffic barrier placed on top of the wall at the wall face. The barrier is to be of the “F shape” and “single slope” configuration and capable of resisting a TL-4 loading in accordance with LRFD BDM Section 10.2.1 for barrier height and test level requirement. With regard to the special plan details required in Section 2, provide an explanation of how the requirements in the GDM, LRFD BDM, and the AASHTO *LRFD Bridge Design Specifications* will be applied to the design of these details, including any deviations from those design standards, and any additional design procedures not specifically covered in those standards, necessary to complete the design of those details. This can be provided as a narrative, or as example calculations in addition to those described earlier in this section.

For internal stability design, provide design procedures, assumptions, and any deviations from the design standards identified above required to design the wall or reinforced system for each of the design issues: listed below. Note that some of these design issues are specific to structural earth wall or reinforced slope design and may not be applicable to other wall types.

1. Assumed failure surface used for design
2. Distribution of horizontal stress
3. How surcharge loads are handled in design
   - Concentrated dead load
   - Sloped surcharge
   - Broken-back surcharge
   - Live load
   - Traffic impact
4. Determination of the long-term tensile strength of reinforcement
5. Pullout design of soil reinforcement or facing components that protrude into wall backfill
6. Determination of vertical and horizontal spacing of soil reinforcements (including traffic impact requirements)
7. Facing design
   - Connections between facing units and components
   - Facing unit strength requirements
   - Interface shear between facing units
   - Connections between facing and soil reinforcement/reinforced soil mass
   - How facing batter is taken into account for the range of facing batters available for the system
   - Facing compressibility/deformation, if a flexible facing is used
8. Seismic design considerations
9. Design assumptions/parameters for assessing mobilization of backfill weight internal to wall system (primarily applies to prefabricated modular walls as defined in the AASHTO *LRFD Bridge Design Specifications*)

List all wall/slope system design limitations, including:

- Seismic loading
- Environmental constraints
- Wall height
- External loading
- Horizontal and vertical deflection limits
- Tolerance to total and differential settlement
- Facing batter
- Other

Computer Support:

If a computer program is used for design or distributed to customers, provide representative computer printouts of design calculations for the above typical applications demonstrating the reasonableness of computer results. All computer output submitted shall be accompanied by supporting hand calculations detailing the calculation process. If MSEW 3.0, or later version, is used for the wall design, hand calculations supporting MSEW are not required.

Quality Control/Quality Assurance for design of the wall/slope systems:

Include the system designer's Quality Assurance program for evaluation of conformance to the wall supplier's quality program.

15-C-6 Part Five: Construction

Provide the following information related to the construction of the system:

1. Provide a documented field construction manual describing in detail and with illustrations as necessary the step-by-step construction sequence, including requirements for:
   - Foundation preparation
   - Special tools required
   - Leveling pad
   - Facing erection
   - Facing batter for alignment
   - Steps to maintain horizontal and vertical alignment
   - Retained and backfill placement/compaction
   - Erosion mitigation
   - All equipment requirements
2. Include sample construction specifications, showing field sampling, testing and acceptance/rejection requirements. Provide sample specifications for:
   - Materials
   - Installation
   - Construction
3. Quality Control/Quality Assurance of Construction:

   Describe the quality control and quality assurance measurements required during construction to assure consistency in meeting performance requirements.

15-C-7 Part Six: Performance

Provide the following information related to the performance of the system:

1. Provide a copy of any system warranties.
2. Identify the designated Responsible Party for:
   - System performance
   - Material performance
   - Project-specific design (in-house, consultant)
3. List insurance coverage types (e.g., professional liability, product liability, performance) limits, basis (i.e., per occurrence, claims made) provided by each responsible party
4. Provide a well documented history of performance (with photos, where available), including:
   - Oldest
   - Highest
   - Projects experiencing maximum measure settlement (total and differential)
   - Measurements of lateral movement/tilt
   - Demonstrated aesthetics
   - Project photos
   - Maintenance history
5. Provide the following types of field test results, if available:
   - Case histories of instrumented structures
   - Construction testing
   - Pullout testing
6. Regarding construction/in-service structure problems, provide case histories of structures where problems have been encountered, including an explanation of the problems and methods of repair.
7. Provide a list of state DOT's that have used this wall system, including contact persons, addresses and telephone numbers.

Appendix 15-D Preapproved Proprietary Wall Systems

The following wall systems are preapproved for use in WSDOT projects:

Table 15-D-1 Preapproved Proprietary Walls

Wall Supplier	System Name and *Appendix Location*	System Description and Appendix Location	ASD/ LFD or LRFD? [1]	Height, or Other Limitations	Year Initially Approved	Last Approved Update
Hilfiker Retaining Walls 1902 Hilfiker Lane Eureka, CA 95503-5711 707-443-5093	Welded Wire Retaining Wall Appendix 15-H	Welded wire facing that is continuous with welded wire soil reinforcement	ASD/LFD	33 feet	Unknown	Approved **12/1/21** (submitted 9/15/03)
The Reinforced Earth Co. 9025 East Kenyon Ave. Suite 200 Denver, CO 80237 303-790-1481	Reinforced Earth Wall Appendix 15-J	Precast concrete 5'×5' facing panels and steel strip soil reinforcement	LRFD	33 feet	1987	Approved 11/9/04
Tensar Earth Technologies, Inc. 2500 Northwinds Parkway Suite 500 Alpharetta, GA 30009 770-344-2090	ARES Wall Appendix 15-K	Precast concrete 5'×5' facing panels and Tensar geogrid soil reinforcement	ASD/LFD	33 feet	1998	Approved 11/9/04
Tensar Earth Technologies, Inc. 2500 Northwinds Parkway Suite 500 Alpharetta, GA 30009 770-344-2090	MESA Wall Appendix 15-L	Modular dry cast concrete block facing with Tensar geogrid soil reinforcement	ASD/LFD	33 feet	2000	Approved 11/9/04
Tensar Earth Technologies, Inc. 2500 Northwinds Parkway Suite 500 Alpharetta, GA 30009 770-344-2090	Welded Wire Form Wall Appendix 15-M	Tensar geogrid wrapped face wall with welded wire facing form	ASD/LFD	33 feet*	2006	Approved 3/3/06
SSL, LLC 4740 Scotts Valley Dr., Suite E Scotts Valley, CA 95066 831-430-9300	MSEPlus Wall Appendix 15-N	Precast concrete 5'x5' facing panels and steel welded wire strip soil reinforcement	LRFD	33 feet	1999	Approved 8/5/13
Anchor Wall Systems, Inc. 5959 Baker Rd, Suite 390 Minnetonka, MN 55345-5996 952-933-8855	Landmark Appendix 15-O	Modular dry cast concrete block facing with Miragrid geogrid soil reinforcement	LRFD	33 feet	2012	Approved 4/2/12

*If the vegetated face option is used for the Hilfiker Welded Wire Retaining Wall or the Tensar Welded Wire Form Wall, the maximum wall height shall be limited to 20 feet. Greater wall heights for the vegetated face option for these walls may be used on a case by case basis as a special design if approved by the State Geotechnical Engineer and the State Bridge Engineer.

[1] For those systems still identified as ASD/LFD, use of the current AASHTO LRFD Bridge Design Specifications is preferred.

Table 15-D-1 Preapproved Proprietary Walls

Wall Supplier	System Name and *Appendix Location*	System Description and Appendix Location	ASD/ LFD or LRFD? [1]	Height, or Other Limitations	Year Initially Approved	Last Approved Update
Allan Block Corporation 7424 W. 78th St. Bloomington, MN 55439 952-835-5309	Allan Block Wall (battered face) Appendix 15-P	Modular dry cast concrete block facing with Miragrid or Stratagrid geogrid soil reinforcement	LRFD	33 feet	2009	Approved 7/15/09
Redi-Rock International LLC 05481 US 31 South Charlevoix, MI 49720 866-222-8400	Redi-Rock PC (Positive Connection) Wall Appendix 15-Q	Precast concrete block facing with Miragrid strip soil reinforcement	LRFD	33 feet	2015	Approved 8/3/15
Lock and Load Retaining Walls LTD 1681 Chestnut St., Suite 400 Vancouver, BC V6J 4M6 Canada 604-732-9990	Lock and Load Wall Appendix 15-R	Precast concrete panel facing attached to wrapped face geogrid wall	LRFD	33 feet	2013	Approved 7/10/13
Keystone Retaining Wall Systems, LLC 4444 West 78th St. Minneapolis, MN 55435 800-747-8971	Keystone Keygrid (Compac **II and** III Units) Appendix 15-S	Modular dry cast concrete block facing with Miragrid geogrid soil reinforcement	LRFD	33 feet	2015	Approved 8/3/15
Basalite Concrete Products, LLC 3299 International Place Dupont, WA 98327-7707 253-964-5000	GEOWALL Structural Earth Retaining Wall Appendix 15-T	Modular dry cast concrete block facing with Miragrid or Stratagrid geogrid soil reinforcement	LRFD	33 feet	2018	Approved 1/2/18

*If the vegetated face option is used for the Hilfiker Welded Wire Retaining Wall or the Tensar Welded Wire Form Wall, the maximum wall height shall be limited to 20 feet. Greater wall heights for the vegetated face option for these walls may be used on a case by case basis as a special design if approved by the State Geotechnical Engineer and the State Bridge Engineer.

[1] For those systems still identified as ASD/LFD, use of the current AASHTO LRFD Bridge Design Specifications is preferred.

Appendix 15-E MSE Wall Design Using the Stiffness Method

15-E-1 Summary of the Stiffness Method and Notations

Table 15-E-1 provides a summary of how to calculate each of the parameters in the Stiffness Method, including coefficient values, based on the method details provided by Allen and Bathurst (2015, 2018). The Stiffness Method equation is repeated below for convenience:

$$T_{max} = S_v \left[H\gamma_r D_{tmax} + \left(\frac{H_{ref}}{H}\right) S\gamma_f \right] K_{avh}\, \Phi_{fb}\, \Phi_g\, \Phi_{fs}\, \Phi_{local}\, \Phi_c \qquad (15\text{-E-}1)$$

where,

T_{max}	=	maximum load in the soil reinforcement away from the facing connection (kips/ft)
K_{avh}	=	active earth pressure coefficient
S_v	=	tributary area (equivalent to the vertical spacing of the reinforcement in the vicinity of each layer when analyses are carried out per unit length of wall) (ft)
H	=	total wall height (ft)
H_{ref}	=	reference height = 20 ft
S	=	average surcharge height above wall within 0.7H of the wall face (ft)
γ_r	=	unit weight of wall backfill soil (kcf)
γ_f	=	unit weight of surcharge soil (kcf)
D_{tmax}	=	T_{max} distribution factor
Φ_g	=	global stiffness factor
Φ_{fs}	=	facing stiffness factor
Φ_{fb}	=	facing batter factor
Φ_{local}	=	local stiffness factor
Φ_c	=	soil cohesion factor

Table 15-E-2 provides a recommended approach to address any soil cohesion that may be present in the wall backfill, as well as what to do if soil shear strength data for the backfill to be used is not available. Note that in WSDOT experience, if Gravel Borrow that meets the requirements in Section 9-03.14(4) of the *Standard Specifications for Road, Bridge, and Municipal Construction* M 41-10 is used as the wall backfill, backfill friction angles are usually at or above 38°, and 38° may be used without backfill specific shear strength tests on WSDOT projects in this case (see Table 5-2 in GDM Chapter 5).

Cohesive shear strength of the MSE wall backfill shall not be used for final design (other than as illustrated in Example 5 at the end of this appendix), and MSE wall backfill that has significant soil cohesion should be avoided, as soil cohesion can be lost over time after wall construction and can also significantly reduce the ability of the wall backfill to drain as water percolates into it. This potential post-construction loss of cohesion over time as well as increase in the amount of water stored in the backfill can cause post-construction reinforcement load and deformation increases. The Stiffness Method can be used to estimate the reinforcement load and deformation increases that could occur post-construction as soil cohesion is lost. See Example 5 at the end of this appendix for an illustration of the effect of lost cohesion after wall construction on reinforcement strains.

Table 15-E-1 Summary of equations, parameters, and coefficients for the Stiffness Method (Allen and Bathurst 2018)

Parameter	Name	Equation	Coefficient	Value
D_{tmax}	T_{max} distribution factor	$z_b = C_h \times (H)^y \times \Phi_{fb}$ For $z < z_b$: $D_{tmax} = D_{tmax0} + (z/z_b) \times (1 - D_{tmax0})$ For $z \geq z_b$: $D_{tmax} = 1.0$	C_h (for H in m) C_h (for H in ft) y D_{tmax0}	0.40 0.32 1.2 0.12
Φ_g	Global stiffness factor	$\Phi_g = \alpha \left(\frac{S_{global}}{p_a} \right)^{\beta}$	α β	0.16 0.26
S_{global}	Global reinforcement stiffness	$S_{global} = \frac{J_{ave}}{(H/n)} = \frac{\sum_{i=1}^{n} R_c J_i}{H}$		
Φ_{local}	Local stiffness factor	$\Phi_{local} = \left(\frac{S_{local}}{S_{localave}} \right)^{a}$	"a" for steel "a" for geosynthetic and extensible steel grids [b]	0 0.5
S_{local}	Local reinforcement stiffness	$S_{local} = R_c J_i / S_v$		
$S_{localave}$	Average local reinforcement stiffness	$S_{localave} = \frac{\sum_{i=1}^{n} (R_c J_i / S_v)}{n}$		
Φ_{fb}	Facing batter factor	$\Phi_{fb} = \left(\frac{K_{abh}}{K_{avh}} \right)^{d}$	d	0.4
Coefficient of active earth pressure		$K_{abh} = \frac{\cos^2(\phi_r + \omega)}{\cos^3 \omega \left(1 + \frac{\sin \phi_r}{\cos \omega} \right)^2}$		
Φ_{fs}	Facing stiffness factor	$\Phi_{fs} = \eta \left(\left(\frac{S_{global}}{P_a} \right) F_f \right)^{\kappa}$	η κ	0.57 0.15
F_f	Facing stiffness parameter	$F_f = \frac{1.5 H^3 P_a}{E b^3 (h_{eff}/H)}$		
Φ_c	Soil cohesion factor	$\Phi_c = e^{\lambda (c/(\gamma_r H))}$	λ	-16

Notes:

[a] see Allen and Bathurst (2015)

[b] e.g., crimped longitudinal steel wire

Other Notation in Table 15-E-1:

- T_{max} = the maximum load in the reinforcement (force/unit running length of wall – e.g. (lbs/ft))
- n = number of reinforcement layers
- H = height of wall (ft)
- H_{ref} = reference wall height = 20 ft
- S_v = tributary vertical spacing of the reinforcement layer (ft)
- b = thickness of the facing column (ft)
- E = elastic modulus of the "equivalent elastic beam" representing the wall face (ksf)
- p_a = atmospheric pressure (101 kPa or 2.11 ksf)
- h_{eff} = equivalent height of an un-jointed facing column that is approximately 100% efficient in transmitting moment through the height of the facing column (ft)
- K_{abh} = horizontal component of active earth pressure coefficient accounting for wall face batter
- K_{avh} = horizontal component of active earth pressure coefficient assuming the wall is vertical ($\omega = 0$)
- J_i = secant tensile creep stiffness of geosynthetic reinforcement layer i at 2% strain and 1000 hours on a per unit of reinforcement width basis from laboratory testing (kips/ft)
- J_{ave} = average secant tensile creep stiffness corrected for the coverage ratio, i.e., R_cJ_i, of all "n" geosynthetic reinforcement layers (kips/ft)
- R_c = reinforcement coverage ratio
- σ_v = vertical pressure due to gravity forces from self-weight of the reinforced soil and soil above the reinforced wall backfill (ksf)
- c = soil cohesion (ksf)
- γ_r = unit weight of the reinforced soil (kcf)
- γ_f = unit weight of the soil surcharge (kcf)
- q = $S\gamma_f$ = average vertical pressure due to soil surcharge on the top of the reinforced soil mass up to a maximum width of 70% of the wall height H (ksf)
- z = depth below wall top measured at the back of the facing (ft)
- K_a = active earth pressure coefficient
- S = average soil surcharge depth above the wall top using a soil surcharge unit weight γ_f (ft)
- ϕ_r = friction angle of the reinforced soil backfill (degrees)
- ω = wall face batter in clockwise direction from the vertical (degrees). In AASHTO (2020) the face batter θ is taken clockwise from the horizontal, hence $\omega = \theta - 90°$

Table 15-E-2 Soil shear strength parameters recommended for design using the Stiffness Method (after Allen and Bathurst 2018)

Cohesive strength component deduced from failure envelope	Plasticity Index PI	Used to calculate K_{avh} and K_{ahb}		Value of c used to calculate Φ_c	Cohesion factor Φ_c	Comments
		ϕ_r	c			
c = 0	NA	ϕ_{tx} or ϕ_{ds}	0	0	1	If backfill soil strength properties are unknown, use conservative default value for ϕ_r
c > 0 (curved Mohr-Coulomb envelope due to particle interlocking)	≤ 6	ϕ_{tx} or $\phi_{ds} \Rightarrow \phi_{sec}$	0	0	1	If uncertain that matric suction is contributing to the cohesion intercept in soil shear test results, assume c = 0. If backfill soil is unknown at time of design, use conservative default value for ϕ_r
c > 0 (apparent cohesion due to matric suction)	≤ 6	ϕ_{tx} or ϕ_{ds}	0	0	1	Always assume c = 0, unless evaluating the influence of post-construction loss of matric suction on reinforcement loads
c > 0 (true cohesion)	> 6	ϕ_{tx} or ϕ_{ds}	0	> 0	< 1	If uncertain that soil cohesion will persist for design lifetime, assume c = 0. To investigate possible loss of cohesive shear strength component over life of wall, compare T_{max} using c > 0 with T_{max} using c = 0

Notes: PI = Plasticity Index, ϕ_r = peak friction angle for reinforced soil backfill, ϕ_{tx} = peak friction angle from triaxial test, ϕ_{ds} = peak friction angle from direct shear test, ϕ_{sec} = peak secant friction angle (determined as shown in Allen and Bathurst (2015, 2018).

15-E-2 Limit State Equations for Design

Limit states that need to be considered when doing internal stability design using the Stiffness Method include soil failure as a Service Limit State, and reinforcement strength, connection strength, and pullout as Strength and Extreme Event Limit States. The load and resistance factors applicable to the Stiffness Method for these limit states are provided in Section 15.5.3.10.2.

15-E-2.1 Soil Failure Limit State Design

Research indicates that if the average peak reinforcement strain in the wall exceeds approximately 2.5 to 3%, for typical granular backfill materials, soil failure as defined can be achieved (Allen et al. 2003; Allen and Bathurst 2013, and Allen and Bathurst 2015, 2018). However, AASHTO (2020) has limited the target reinforcement strain to 2% for stiff faced walls and 2.5% for flexible faced walls.

The soil failure limit state should be considered a service limit state for design because it is a deformation criterion. Furthermore, if this criterion is substantially exceeded the structure will not collapse but will more likely develop progressive increases in facing deformation. The soil failure limit state must be evaluated if the Stiffness Method is used to compute geosynthetic reinforcement loads (as well as for extensible steel grid) for working stress (operational) conditions. The goal of this limit state is to ensure that the factored reinforcement strain in any layer is less than the target maximum peak strain to prevent exceedance of the soil failure limit state. To calculate the reinforcement strain ε_{rein} in individual layers, see Equation 15-14 in Section 15.5.3.10.3.1.

If ε_{rein} in any individual layer exceeds the limit strain ε_{mxmx}, or if the target strain for the average ε_{rein} for all of the layers in the wall section is exceeded, then another product(s) with higher stiffness must be selected and this limit state checked again. For the same product line, increasing stiffness is associated with increasing T_{ult} values as can be seen in NTPEP reports (e.g., NTPEP 2019).

For design purposes, reinforcement used in the wall would be selected based on the tensile strength required to prevent reinforcement rupture and connection failure, and also selected based on the minimum reinforcement stiffness required in all the reinforcement layers to prevent the development of a contiguous shear surface through the reinforced soil zone.

In general, the soil failure limit state should be checked first, as this limit state often controls the amount of reinforcement required. The stiffness values coming out of that limit state analysis should then be used to determine T_{max} for reinforcement and connection rupture, and pullout. For systems with very poor connection strength, it is possible that connection strength could control design instead. If that is the case, the soil failure limit state may need to be reassessed to make sure that the reinforcement creep stiffness is consistent with the ultimate tensile strength needed. See Allen and Bathurst (2019) for information on the correlation between tensile strength and creep stiffness, as well as AASHTO NTPEP (2019) for product line specific correlations between tensile strength and creep stiffness.

15-E-2.2 Reinforcement Strength Design

The tensile strength reduction factor for a reinforcement product in a geosynthetic reinforced soil wall is computed as:

$$RF = RF_{ID} \times RF_{CR} \times RF_{D} \quad \text{(15-E-3)}$$

where,

RF_{ID} = installation damage reduction factor,

RF_{CR} = creep reduction factor, and

RF_{D} = durability reduction factor.

These reduction factors shall be determined in accordance with AASHTO R 69. Product specific data that can be used to assess the reduction factors can be obtained at NTPEP (2019).

The long-term (nominal) design strength is:

$$T_{al} = \frac{T_{ult}}{RF} = \frac{T_{ult}}{RF_{ID}RF_{CR}RF_{D}} \quad \text{(15-E-4)}$$

where,

T_{ult} = ultimate tensile strength of the reinforcement

The calibration of the load and resistance factors for the Stiffness Method assumes that the Minimum Average Roll Value (MARV) of the ultimate tensile strength is used for design to obtain T_{al}.

Equation 15-E-1 is the equation to calculate the unfactored reinforcement load T_{max} in each reinforcement layer using the Stiffness Method. The factored limit state design equation for tensile rupture for the case of dead loads only is expressed as:

$$\gamma_{p\text{-}EV}\, T_{max} < \phi_{rr} T_{al} R_c \quad \text{(15-E-5)}$$

where,

ϕ_{rr} = the resistance factor for reinforcement rupture.

All parameters are as defined previously.

Combining equations 15-E-1 and 15-E-5 for the case of dead loads only leads to:

$$T_{al}(required) = \left(\frac{\gamma_{p-EV}}{\varphi_{rr}R_c}\right) T_{max} = \left(\frac{\gamma_{p-EV}}{\varphi_{rr}R_c}\right) S_v \left[H\gamma_r D_{tmax} + \left(\frac{H_{ref}}{H}\right) S\gamma_f\right] K_{avh}\, \Phi_{fb}\, \Phi_g\, \Phi_{fs}\, \Phi_{local}\, \Phi_c \quad \text{(15-E-6)}$$

where,

T_{al} (required)

= the required minimum (factored) long-term reinforcement strength to resist the factored loads.

The equivalent expression for the case of an additional live load LL is:

$$T_{al}(required) = \left(\frac{\gamma_{p-EV}}{\varphi_{rr}R_c}\right)T_{max} = \left(\frac{\gamma_{EV}}{\varphi_{rr}R_c}\right)S_v\left[H\gamma_r D_{tmax} + \left(\frac{H_{ref}}{H}\right)S\gamma_f + LL\left(\frac{\gamma_{LL}}{\gamma_{p-EV}}\right)\right]K_{avh}\,\Phi_{fb}\,\Phi_g\,\Phi_{fs}\,\Phi_{local}\,\Phi_c \quad \text{(15-E-7)}$$

where,

LL = live load (kPa),

γ_{LL} = live load factor = 1.75.

All other factors are as previously defined. For other dead load scenarios such as footings with finite surface areas, conventional (elastic) solutions can be used and the resulting factored horizontal load added to the right-hand side of equations 15-E-5 and 15-E-6 as shown below:

$$T_{al}(required) = \frac{\left(\gamma_{p-EV}T_{max}+\gamma_{p-ES}S_v(K_a\Delta\sigma_v+\Delta\sigma_H\right)}{(\varphi_{rr}R_c)} = \left(\frac{\gamma_{p-EV}}{\varphi_{rr}R_c}\right)S_v\left[H\gamma_r D_{tmax} + \left(\frac{H_{ref}}{H}\right)S\gamma_f + LL\left(\frac{\gamma_{LL}}{\gamma_{p-EV}}\right)\right]K_{avh}\,\Phi_{fb}\,\Phi_g\,\Phi_{fs}\,\Phi_{local}\,\Phi_c + \frac{(\gamma_{p-ES}S_v(K_a\Delta\sigma_v+\Delta\sigma_H)}{(\varphi_{rr}R_c)} \quad \text{(15-E-8)}$$

where,

$\gamma_{p\text{-}EV}$ = load factor for vertical earth pressure specified in Table 15-5 (dim.)

$\gamma_{p\text{-}ES}$ = load factor for earth surcharge (ES) in the *AASHTO LRFD Bridge Design Manual*, Table 3.4.1-2

$\Delta\sigma_v$ = vertical soil stress due to concentrated load such as a footing load (ksf)

$\Delta\sigma_H$ = horizontal stress at reinforcement level resulting from a concentrated horizontal surcharge load (ksf)

S_v = tributary layer vertical thickness for reinforcement (ft)

K_a = active lateral earth pressure coefficient (dim)

However, the soil failure limit state would also need to be checked for the combined loading. If superposition principles are used to determine that combined loading, the soil failure limit state will become excessively conservative for footing load that are typical for bridges. Therefore, if designing an MSE bridge abutment, due to the high footing load that is likely, it is best to use the Simplified Method instead to do that design.

15-E-2.3 Connection Strength Design

AASHTO (2020) specifies that T_o is equal to $1.0 \times T_{max}$, although T_o could be significantly greater or less than T_{max}. In the absence of a method based on measured data, the AASHTO (2020) approach should be used, except that T_{max} is determined using the Stiffness Method. For design purposes, the minimum connection strength required is compared to the long-term connection strength available.

The reinforcement connection strength limit state equation is as follows:

$$\gamma_{p\text{-}EVc} T_o = \phi_{cr} T_{ac} R_c \qquad \text{(15-E-9)}$$

where,

T_{ac} = nominal long-term reinforcement/facing connection strength per unit of wall width (kips/ft)

$\gamma_{p\text{-}EVc}$ = connection load factor,

R_c = the reinforcement coverage ratio,

ϕ_{cr} = connection resistance factor for rupture or pullout of the reinforcement at the connection to the wall face, and

T_o = the reinforcement load at the connection, which is equal to $1.0T_{max}$, and T_{max} is determined using the Stiffness Method.

For geosynthetic block-faced walls, the reference (short-term) ultimate connection strength ($T_{ultconn}$) is determined from straight-line approximations to different ranges of normal load (or stress) applied to the connection system from the results of a standard laboratory testing protocol such as ASTM D6638 (2011), hence:

$$\begin{aligned} T_{ultconn} &= c_{conn} + N\ tan\phi_{conn} \\ &= c_{conn} + (b\sigma_n) tan\phi_{conn} = c_{conn} + (b[\gamma_{bk} \times z]) tan\phi_{conn} \end{aligned} \qquad \text{(15-E-10)}$$

where,

c_{conn} = the vertical axis intercept (e.g., units of kips/ft) on a plot of connection capacity versus normal load N (e.g., units of kips/ft) or stress σ_n (in ksf) acting at the connection due to the facing column,

b = toe to heel dimension of the block,

γ_{bk} = the unit weight of the infilled block,

z = the depth of the connection below the crest of the wall (assuming the wall is vertical), and

ϕ_{conn} = the slope of the failure envelope line segment.

For many systems, the line segment for the normal load of interest may be horizontal (hence, $c_{conn} > 0$ and $\phi_{conn} = 0$) (Bathurst and Simac 1993).

T_{ac} is determined as follows:

$$T_{ac} = \frac{T_{ult} \times CR_{cr}}{RF_D} \quad \text{(15-E-11)}$$

where,

T_{ult} = minimum average roll value (MARV) ultimate tensile strength of soil reinforcement (kips/ft)

CR_{cr} = long-term connection strength reduction factor to account for reduced ultimate strength resulting from connection (dim.)

RF_D = reduction factor to prevent rupture of reinforcement due to chemical and biological degradation (dim.)

CR_{cr} is determined using RF_{CR} to reduce the short-term (i.e., ultimate) connection strength $T_{ultconn}$ to account for creep of the geosynthetic at the connection, or it may be based on long-term connection creep tests. If connection creep tests are not conducted, CR_{cr} shall be based on short-term connection tests and shall be determined as follows:

$$CR_{cr} = \frac{T_{ultconn}}{(RF_{CR} T_{lot})} \quad \text{(15-E-12)}$$

where,

$T_{ultconn}$ = nominal short-term connection strength (lbs/ft)

RF_{CR} = strength reduction factor to prevent long-term creep rupture of reinforcement (dim.)

T_{lot} = ultimate wide width tensile strength (ASTM D4595 or D6637) of the geosynthetic material used in the connection tests (lbs/ft)

If traffic live load is present and treated as an equivalent uniformly distributed surface pressure, then the minimum T_{ac} required is:

$$T_{ac}(\text{required}) = \frac{T_{ultconn}}{(RF_D \times RF_{CR})} \geq \left(\frac{\gamma_{con}}{\varphi_{cr} R_c}\right)\left(T_o + LL\left(\frac{\gamma_{LL}}{\gamma_{con}}\right) S_v K_{avh} \Phi_g \Phi_{fb} \Phi_{fs} \Phi_{local} \Phi_c\right) \quad \text{(15-E-13)}$$

The value of T_{ult} to satisfy this requirement is therefore:

$$T_{ult}(required) = \frac{T_{ultconn}}{CR_u} \geq \left(\frac{\gamma_{con}}{\varphi_{cr} R_c}\right)\left(\frac{RF_D \times RF_{CR}}{CR_u}\right)\left(T_o + LL\left(\frac{\gamma_{LL}}{\gamma_{con}}\right) S_v K_{av} \Phi_g \Phi_{fb} \Phi_{fs} \Phi_{local} \Phi_c\right) \quad \text{(15-E-14)}$$

All variables are defined previously. For other types of connections, minor modifications to these equations may be needed; see AASHTO (2020) for guidance on handling other facing connection systems.

15-E-2.4 Pullout Resistance Limit State Design

The following equations are used for the pullout resistance limit state to estimate the required reinforcement length in the anchorage zone beyond the active zone boundary:

$$\gamma_{p\text{-}EV} T_{max} = \phi_{po} P_c \quad \text{(15-E-15)}$$

where,

P_c = nominal calculated pullout resistance, and

ϕ_{po} = resistance factor applicable to pullout resistance.

Other variables are defined previously.

P_c is calculated as:

$$P_c = C(F^*\alpha)\sigma_v L_e R_c \quad \text{(15-E-16)}$$

where,

L_e = anchorage length,

F^* *and* α = dimensionless parameters based on reinforcement type,

σ_v = vertical stress acting on the reinforcement layer anchorage length, and

C = reinforcement surface geometry factor (set at 2 for strip, grid and sheet-type reinforcement).

Details how to determine α and F^*, vertical stress σ_v, and anchorage length L_e behind the active zone are provided in AASHTO (2020), Article 11.10.6.3.2.

15-E-2.5 Design Process for the Stiffness Method

Figure 15-E-1 illustrates the design process for the Stiffness Method, for geosynthetic walls (Allen and Bathurst 2018).

Figure 15-E-1 Design flowchart for the Stiffness Method for geosynthetic walls

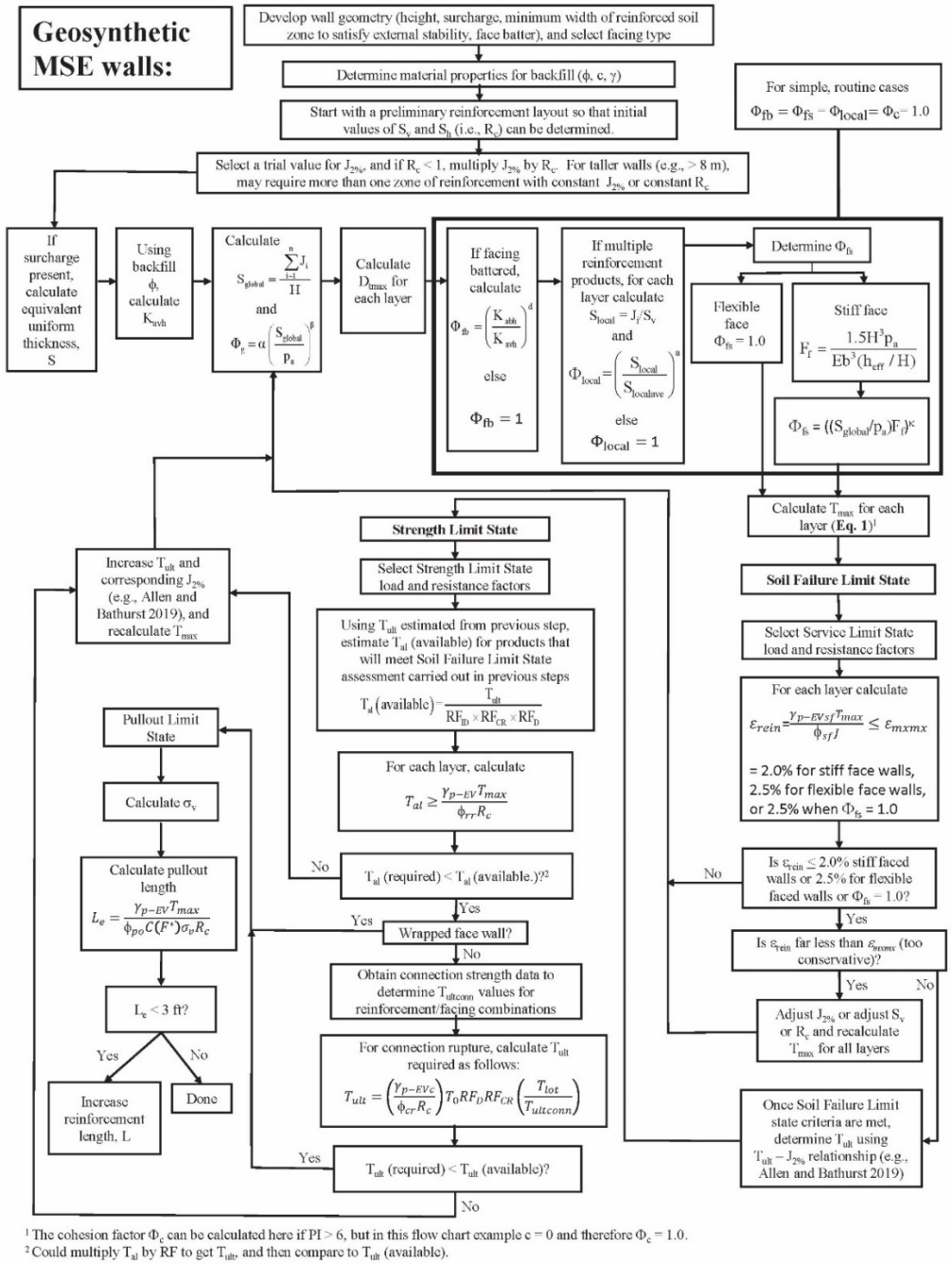

[1] The cohesion factor Φ_c can be calculated here if PI > 6, but in this flow chart example c = 0 and therefore Φ_c = 1.0.
[2] Could multiply T_{al} by RF to get T_{ultr} and then compare to T_{ult} (available).

Figure 15-E-1 applies to internal stability Service and Strength Limit State design. If seismic design is required, seismic forces are considered outside of the Stiffness Method using superposition principles. See Section 15-E-3 for doing seismic design for internal stability.

15-E-3 Seismic Internal Stability Design when Using the Stiffness Method

The calculation of T_{max} using the Stiffness Method (Equation 15-E-1) is also applicable for seismic design. T_{md}, the incremental dynamic inertia force per reinforcement layer, must be added to T_{max} to determine the total reinforcement load for each layer during seismic loading.

T_{md} is calculated in accordance with Article 11.10.7.2 of AASHTO (2020). For convenience, the equations needed are as follows:

$$T_{md} = \left(\frac{P_i}{n}\right) \quad \text{(15-E-17)}$$

where,

P_i = internal inertia force due to the weight of backfill within the active zone, i.e., the shaded area in AASHTO (2020) Figure 11.10.7.2-1 (kips/ft)

n = total number of reinforcement layers in the wall at a specific wall section (dim)

k_h is dependent on the amount of horizontal movement of the reinforced soil mass during shaking that is allowed to occur or that will occur. Typically, if the wall is allowed to slide 1 to 2 inches, k_h can be assumed equal to $0.5A_s$, and A_s is equal to PGA x F_{pga}. F_{pga} is the site factor at a period of 0 seconds, and depends on the site class and the peak ground acceleration (PGA). See Table 6-4 in Chapter 6 of the GDM for values of F_{pga}.

If it is acceptable to allow more horizontal deformation during shaking (see GDM Section 15-4.10), k_h may be calculated as follows (AASHTO 2020):

$$k_h = 0.74A_s\left(\frac{A_s}{d}\right)^{0.25} \quad \text{(15-E-18)}$$

where,

k_h = horizontal seismic acceleration coefficient (dim)

A_s = earthquake ground acceleration coefficient as specified in Equation 3.10.4.2-2 in AASHTO (2020)

d = lateral wall displacement (in.)

Alternative formulations that may be used to estimate k_h as a function of wall displacement are provided in AASHTO (2020), specifically Appendix A11, Article A11.5.

Free-standing MSE walls may be designed to slide laterally up to 8 inches during earthquake shaking, provided that whatever is located above the wall can tolerate that amount of movement, and assuming that no collapse is the seismic performance objective for the wall.

P_i is determined as follows:

$$P_i = k_h\left(\gamma_r \times A_{active} + \gamma_{facing} \times T_f \times H\right) \quad \text{(15-E-19)}$$

where,

γ_r = unit weight of soil in reinforced backfill (kcf)

A_{active} = area of MSE reinforced backfill within active zone, plus soil surcharge above active zone as shown in Figure 11.10.7.2-1 in AASHTO (2020) (ft^2)

γ_{facing} = unit weight of structural facing or modular block facing (kcf)

T_f = thickness of facing, or for modular blocks, W_u (ft)

H = wall height at face (ft)

For thin or otherwise light weight facing elements, the weight of the facing may be ignored for this calculation.

The total load per reinforcement layer during seismic shaking, T_{totalf}, is then calculated using superposition as follows:

$$T_{totalf} = \gamma_{seis}(T_{max} + T_{md}) \quad \text{(15-E-20)}$$

where,

γ_{seis} = Extreme Event I load factor for reinforcement load due dead load plus seismically induced reinforcement load (dim)

Note that the reason γ_{seis} = 1.0 for both the static and dynamic portions of the load is that a significantly higher probability of failure is targeted due to the fact that the load has a small likelihood of occurring and also that some damage is acceptable during seismic loading. The Strength Limit State load factors are significantly greater than 1.0 because the probability of failure targeted is much lower, and significant damage due to the static loading is to be prevented by the design.

For seismic pullout design, T_{totalf} is used. However, for reinforcement rupture and connection rupture under seismic loading, the static and dynamic components of the reinforcement load must be handled separately. The reason for this is that the strength required to resist T_{max} must include the effects of creep because it is a sustained load, but the strength required to resist T_{md} should not include the effects of creep due to the transient nature of T_{md}. See AASHTO (2020) for additional details.

15-E-3.1 Reinforcement Rupture (Extreme Event I - Seismic)

The ultimate tensile strength of the reinforcement is determined by summing together the portion needed to resist the static force (i.e., T_{max}) and the portion needed to resist the dynamic portion (i.e., T_{md}). Therefore,

$$T_{ult} = S_{rs} + S_{rt} \quad (15\text{-E-}21)$$

where,

S_{rs} = ultimate reinforcement tensile resistance required to resist static load component (kips/ft)

S_{rt} = ultimate reinforcement tensile resistance required to resist dynamic load component (kips/ft)

For the static component,

$$S_{rs} = \frac{\gamma_{seis} T_{max} RF}{\phi R_c} \quad (15\text{-E-}22)$$

Again, T_{max} is determined using the Stiffness Method.

For the dynamic component,

$$S_{rt} = \frac{\gamma_{seis} T_{md} RF_{ID} RF_D}{\phi R_c} \quad (15\text{-E-}23)$$

where,

γ_{seis} = the Extreme Event I load factor for reinforcement load due to dead load plus seismically induced reinforcement load (dim.)

ϕ = resistance factor for combined static/earthquake loading from Article 11.5.8 (dim.)

R_c = reinforcement coverage ratio specified in Article 11.10.6.4.1 (dim.)

RF = combined strength reduction factor to account for potential long-term degradation due to installation damage, creep, and chemical aging specified in Article 11.10.6.4.3b (dim.)

RF_{ID} = strength reduction factor to account for installation damage to reinforcement specified in Article 11.10.6.4.3b (dim.)

RF_D = strength reduction factor to prevent rupture of reinforcement due to chemical and biological degradation specified in Article 11.10.6.4.3b (dim.)

15-E-3.2 Connection Rupture (Extreme Event I - Seismic)

Similarly, the approach used for reinforcement rupture during seismic shaking is also used for connection rupture.

$$T_{ult} = S_{rsc} + S_{rtc} \quad \text{(15-E-24)}$$

where,

S_{rsc} = ultimate reinforcement tensile resistance required to resist static load component at connection (kips/ft)

S_{rtc} = ultimate reinforcement tensile resistance required to resist dynamic load component at connection (kips/ft)

$$S_{rsc} = \frac{\gamma_{seis} T_0 RF_D}{F_r \phi CR_{cr} R_c} \quad \text{(15-E-25)}$$

$$S_{rtc} = \frac{\gamma_{seis} T_{md} RF_D}{F_r \phi CR_u R_c} \quad \text{(15-E-26)}$$

where,

γ_{seis} = the Extreme Event I load factor for reinforcement load due to dead load plus seismically induced reinforcement load (dim)

T_0 = applied load to reinforcement at facing connection (kip/ft)

RF_D = reduction factor to prevent rupture of reinforcement due to chemical and biological degradation specified in Article 11.10.6.4.4b (dim.)

ϕ = resistance factor applicable to seismic loading, typically 1.0 (dim.)

CR_{cr} = long-term connection strength reduction factor to account for reduced ultimate strength resulting from connection, equal to CR_u/RF_{CR} or T_{crc}/T_{lot}, in which T_{crc} is the creep limited connection strength at the desired design life if the creep limited connection strength is determined directly from the connection creep test data (dim.)

R_c = reinforcement coverage ratio from Article 11.10.6.4.1 (dim.)

T_{md} = factored incremental dynamic inertia force (kip/ft)

CR_u = short-term reduction factor to account for reduced ultimate strength resulting from connection as specified in AASHTO (2020) Article C11.10.6.4.4b, equal to $T_{ultconn}/T_{lot}$ (dim.)

F_r = reduction factor to account for reduced friction during shaking between facing blocks and geosynthetic reinforcement (equal to 0.8 if the connection relies primarily on friction, or 1.0 if the connection is structural, i.e., does not rely on friction)

15-E-3.3 Pullout (Extreme Event I - Seismic)

$$L_e = \frac{\gamma_{seis}(T_{max} + T_{md})}{\phi C(0.8\alpha F^*)\sigma_v R_c} \quad \text{(15-E-27)}$$

where,

γ_{seis} = the Extreme Event I load factor for reinforcement load due to dead load plus seismically induced reinforcement load (dim)

15-E-4 Summary of MSE Wall Internal Stability Design Steps for Geosynthetic Walls Using the Stiffness Method

1. Establish wall geometry (height, surcharge, minimum width of reinforced soil zone to satisfy external stability, face batter), and select facing type
2. Establish soil backfill properties (ϕ, c, γ)
3. Develop preliminary wall reinforcement layout (S_v and S_h)
4. Calculate active earth pressure coefficient for reinforced zone
5. Calculate reinforcement load for each layer, T_{max}, using the creep stiffness required in each layer to meet Service Limit state requirements (i.e., the soil failure limit state) as a starting point
6. Calculate long-term tensile strength needed for each layer, T_{al}, for Strength Limit state, starting with creep stiffness values determined from Step 5
   a. Reinforcement rupture: $\phi T_{al} \geq \gamma_{p-EV} T_{max}$
   b. Connection rupture: $\phi T_{ac} \geq \gamma_{p-EV} T_0$
   c. In both cases, select geosynthetic reinforcement products with consideration to long-term strength reduction factors applicable to each product (i.e., RF_{ID}, RF_{CR}, and RF_D) and with consideration to the long-term connection strength available considering the block-geosynthetic combinations available
7. Calculate reinforcement length needed, $L_a + L_e$, for pullout, Strength Limit State
8. Calculate long-term strength needed for Extreme Event I Limit state (seismic design)
   a. $T_{totalf} = \gamma_{seis}(T_{max} + T_{md})$
   b. Reinforcement rupture
   c. Connection rupture
   d. In both cases, select geosynthetic reinforcement products with consideration to long-term strength reduction factors applicable to each product (i.e., RF_{ID} and RF_D, as RF_{CR} not important for seismic loading) and with consideration to the connection strength available considering the block-geosynthetic combinations available
   e. Pullout
9. If the connection strength is low and/or if the seismic acceleration is high and controls the reinforcement design with regard to strength and stiffness required, recalculate T_{max} using the increased stiffness required and recheck all limit states
10. Check compound stability (T_{al} and reinforcement length needed, both Strength and Extreme Event I limits)

A series of 20 ft tall wall design examples are provided in the sections that follow to illustrate these design steps for various cases. These design examples include:

1. Flexible face wall, coverage ratio, R_c, of 1.0,
2. Modular block face wall, coverage ratio, R_c, of 1.0, mechanical facing-reinforcement connection; same as Example 1 but with stiff, rather than flexible, facing,
3. Modular block face wall, coverage ratio, R_c, of 0.9, mechanical facing-reinforcement connection; same as Example 2 except coverage ratio is less than 1.0 to illustrate how the coverage ratio is addressed in design,
4. Modular block face wall, coverage ratio, R_c, of 0.9, frictional facing-reinforcement connection (proprietary wall system); same as Example 3 except that the facing reinforcement is frictional rather than mechanical, and
5. Flexible face wall, coverage ratio, R_c, of 1.0; same as Example 1, partial example to illustrate the effect of backfill cohesion, and how cohesion should, and should not be, handled in wall design.

15-E-5 Stiffness Method Design Example 1: Flexible Faced Geosynthetic Wall

15-E-5.1 General

This first example is a simple design case. Subsequent examples will add features that increase in complexity to illustrate how various scenarios are handled when using the Stiffness Method.

Figure 15-E-2 shows a cross-section of the wall for this design example, and material properties are provided in Table 15-E-3. Assume for this example that polyester (PET) geogrid will be used for the soil reinforcement. Assume a flexible facing will be used (e.g., welded wire baskets, or just a geosynthetic wrap facing). Assume that the connection between the geogrid and the facing is not an issue (i.e., the connection strength is 100% efficient) – while this may not be the case for welded wire baskets as shown, it will be the case for a wrapped face wall. So this assumption is made in this example to focus on the simplest case for illustration purposes. The wall backfill is assumed to be a well-graded gravelly sand, with no cohesion. The scope of this design example is limited to the service (soil failure limit only), strength, and Extreme Event I (seismic) limit states. Furthermore, for simplicity, live loads are not included in the calculations to follow. It is also assumed that the foundation soil has sufficient shear strength to prevent global instability, bearing capacity failure and excessive settlement. For seismic design, assume that the ground acceleration, A_s, is 0.50g.

Note that a 2 ft vertical spacing of the reinforcement is used for this example. Normally, for a wrapped face geosynthetic wall, a vertical spacing of 2 ft is too large to keep face bulging, overall lateral deformation, and possibly vertical deformation, under control and is likely marginally too large even for a welded wire flexible faced wall. This spacing is being used in this example to facilitate comparisons with the stiff (dry cast concrete blocks) faced wall examples provided subsequent to this example. Also, a reinforcement coverage ratio, R_c, of 1.0 is used for this example. Also note that if a wrapped face geosynthetic wall is part of a two-stage wall system in which a concrete wall facing is added after the post-construction wall movement has ceased (e.g., the WSDOT Standard Plan geosynthetic wall), it is still designed as a flexible faced wall, since the more rigid concrete facia is added after the wrapped face wall is constructed.

Table 15-E-3 Design properties for wall

Property	Design Value
Moist soil unit weight (pcf)	130
Triaxial drained peak friction angle ϕ_{tx} (°)	34
Min. available, but not wall system specific, 1,000 hr, 2% secant J_i x R_c (kips/ft)	8.6 × 1.0 = 8.6
RF_{ID} RF_{CR} RF_D = RF	1.12x1.5x1.3 = 2.18
Coverage ratio, R_c	1.0
Facing welded wire basket height (ft)	1.0 (i.e., 2 baskets between reinforcement layers)
Facing welded wire basket width, W_u (face to tail) (ft)	1.0
Connection strength as fraction of T_{ult}, CR_u	1.0

In Table 15-E-3, and all subsequent uses, J_i is defined as the geosynthetic product secant creep stiffness at 1,000 hrs and 2% strain, per unit of reinforcement width. When J_i is multiplied by R_c, the resulting stiffness is per unit of wall width rather than per unit of reinforcement width.

Figure 15-E-2 Wall geometry and preliminary PET reinforcement layout for Design Example 1

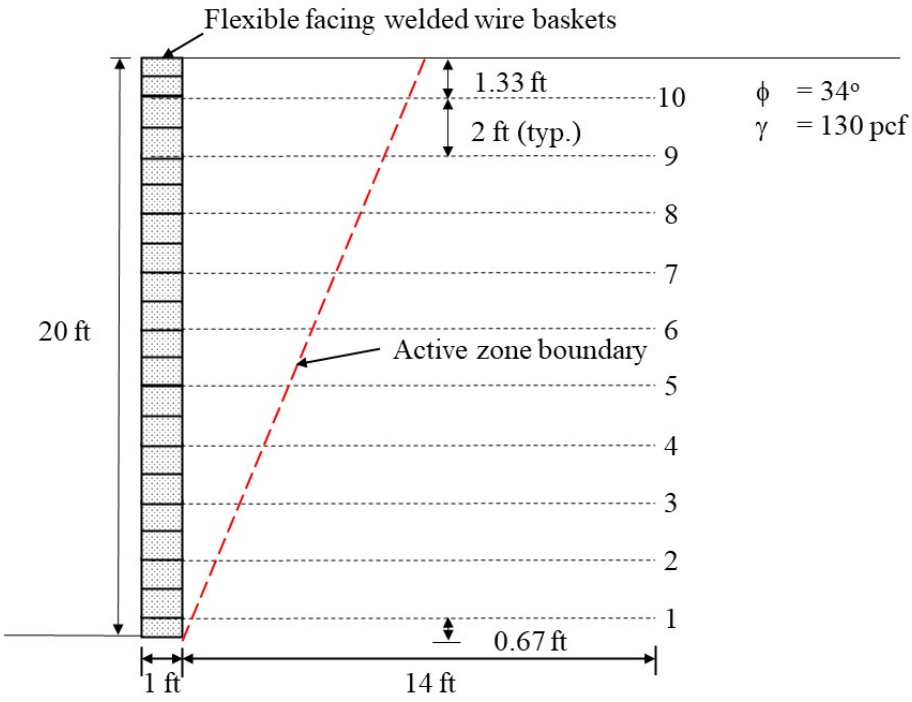

Since, for this example, the wall is designed assuming that the wall face is flexible, Φ_{fs} = 1.0. It is assumed that the design can be completely generic (e.g., the WSDOT Standard Plan Geosynthetic wall). For this flexible wall face example, connection strength is assumed to not be a consideration, so either reinforcement stiffness or reinforcement rupture will likely control the design.

The wall geometry is based on Figure 15-E-2. Example calculations are demonstrated for one of the middle layers (i.e., Layer 6 in Figure 15-E-2, and for the soil failure and pullout limit states, Layer 10 is also used to illustrate calculations).

S = equivalent uniform height of surcharge = 0 ft

$K_{avh} = K_a = (1 - \sin \phi_r)/(1 + \sin \phi_r) = (1 - \sin 34°)/(1 + \sin 34°) = 0.283$

For walls with a facing batter $\omega > 0$, the formula below is used to compute K_{abh} which appears in the facing batter factor equation (Φ_{fb}). Since the wall in this example is vertical ($\omega = 0$), $K_{abh} = K_{avh}$ as shown here:

$$K_{abh} = \frac{cos^2(\phi_r+\omega)}{cos^3\omega\left(1+\frac{sin\phi_r}{\cos\omega}\right)^2} = \frac{cos^2(34^o+0)}{cos^3 0\left(1+\frac{sin34^o}{\cos 0}\right)^2} = 0.283$$

The reinforcement stiffness values used in the calculations to follow need to be adjusted to account for the reinforcement coverage ratio, R_c. However, for this simple example, R_c is assumed to be 1.0, which is the typical case for flexible faced walls anyway.

Since the soil failure limit state usually controls the amount of reinforcement required, this limit state is evaluated first, and T_{max} calculated, for the wall design.

15-E-5.2 Calculations for Soil Failure Limit State Design (Service I)

The goal of this limit state is to ensure that the factored reinforcement strain in each layer is less than the target maximum strain in the wall required to prevent a contiguous shear surface through the backfill soil from developing (i.e., soil failure limit state). The AASHTO LRFD Bridge Design Specifications (AASHTO 2020) require that the factored reinforcement peak strain for each layer be 2.5% or less for a flexible faced wall. Some trial-and-error is typically required to establish what reinforcement stiffness values are required. As a first trial, use the minimum 1,000-hour 2% strain secant stiffness available for geosynthetic reinforcement products, J_i = 8.6 kips/ft for all layers (see Table 15-E-3).

Note that the creep stiffness and strength for specific products are available in the WSDOT Qualified Products List (QPL) Appendix E. Alternatively, this data can be obtained from NTPEP (2019) at the AASHTO NTPEP website (https://data.ntpep.org/REGEO/Products), and once there, click on "Construction" and then "Geosynthetic Reinforcement". In addition, Allen and Bathurst (2019) summarize all the NTPEP low strain 1,000 hour creep stiffness data available at that time, additional creep stiffness data found in the literature, and generic relationships between T_{ult} and the 1,000 hour 2% secant creep stiffness for various geosynthetic reinforcement product types.

The contributing factors, coefficients and parameters that comprise the T_{max} equation can be found in Allen and Bathurst (2015) and Table 15-E-1. To calculate T_{max}, the reinforcement stiffness must be per unit of wall width rather than per unit of reinforcement product width; hence, R_cJ_i must be used where the reinforcement stiffness value is required. Therefore, the parameters used to determine T_{max} are calculated as follows:

$$S_{\text{global}} = \frac{J_{\text{ave}}}{(\text{H/n})} = \frac{\sum_{i=1}^{n} R_c J_i}{H} = (10 \times 1.0 \times 8.6 \text{ kips/ft})/20 \text{ ft} = 4.30 \text{ ksf}$$

(applies to whole wall section)

$$\Phi_g = \alpha \left(\frac{S_{\text{global}}}{p_a}\right)^{\beta} = 0.16 \times (4.30 \text{ ksf}/2.11 \text{ ksf})^{0.26} = 0.193 \text{ (applies to whole wall section)}$$

$$\Phi_{fb} = \left(\frac{K_{abh}}{K_{avh}}\right)^{d} = (0.283/0.283)^{0.4} = 1.0 \text{ (applies to whole wall section)}$$

$$S_{\text{local}} = \left(\frac{R_c J}{S_v}\right)_i = (1.0 \times 8.6 \text{ kips/ft})/(2.0 \text{ ft}) = 4.30 \text{ ksf for Layer 6}$$

$$S_{localave} = \frac{\sum \left({}^{R_c J}/_{S_v}\right)_i}{n} = \frac{3.69 + 8 \times 4.30 + 5.15}{10} = 4.32\ ksf$$

where, n = 10 is the number of reinforcement layers. Therefore, Φ_{local} is calculated as follows:

$$\Phi_{local} = \left(\frac{S_{local}}{S_{localave}}\right)^{0.5} = \left(\frac{4.30\ ksf}{4.32\ ksf}\right)^{0.5} = 1.00\ \ (layer\ 6)$$

The facing stiffness factor Φ_{fs} is equal to 1.0, since the facing is considered flexible.

Since c = 0, the cohesion factor, $\Phi_c = 1.0$.

D_{tmax} is determined for Layer 6 as follows:

$z_b = C_h \times (H)^y \times \Phi_{fb} = (0.32 \times (20\text{ ft})^{1.2}) \times 1.0 = 11.65\text{ ft}$

For $z \le z_b$: $D_{tmax} = D_{tmax0} + (z/z_b) \times (1 - D_{tmax0}) = 0.12 + (9.33\text{ ft}/11.65\text{ ft}) \times (1 - 0.12) = 0.825$

For bottom layers where $z > z_b$: $D_{tmax} = 1.0$

T_{max} for layer 6 is calculated as follows:

$$T_{max} = S_v \left[H\gamma_r D_{tmax} + \left(\frac{H_{ref}}{H}\right) S\gamma_f + LL \right] K_{avh} \Phi_{fb} \Phi_g \Phi_{fs} \Phi_{local} \Phi_c$$

$$T_{max} = 2.0\ ft \left[20ft \times 0.130\ kcf \times 0.825 + \left(\frac{20\ ft}{20\ ft}\right) 0\ ft \times 0.130\ kcf + 0 \right] 0.283 \times 1.0 \times 0.193 \times 1.0 \times 1.0 \times 1.0$$

$T_{max} = 0.233$ kips/ft of wall width

Using Equation 15-14 with load factor $\gamma_{sf} = 1.2$, and resistance factor $\phi_{sf} = 1.0$ (Table 15-5), the factored reinforcement strain corresponding to layer 10 is computed as:

$$\varepsilon_{rein} = \frac{\gamma_{p-EVsf} T_{max}}{\phi_{sf} R_c J_i} = \frac{1.2 \times 0.067 \frac{kips}{ft}}{1.0 \times 1.0 \times 8.6 \frac{kips}{ft}} \times 100\% = 0.94\% \le 2.5\% \quad OK$$

For layer 6:

$$\varepsilon_{rein} = \frac{\gamma_{p-EVsf} T_{max}}{\phi_{sf} R_c J_i} = \frac{1.2 \times 0.233 \frac{kips}{ft}}{1.0 \times 1.0 \times 8.6 \frac{kips}{ft}} \times 100\% = 3.25\% \le 2.5\% \quad No.$$

T_{max}, and the calculated parameters needed to calculate T_{max}, are summarized in Table 15-E-4 for the rest of the layers. As can be seen in the table and the calculations above, the calculated factored strains are greater than 2.5% in the lower half of the wall, which exceeds the soil failure limit state strain criterion provided in AASHTO (2020) of 2.5% for flexible faced walls.

Table 15-E-4 Summary of Example 1 wall design calculations using Stiffness Method considering only the Service Limit State, first trial using only the minimum stiffness geogrid product available.

	$^{+}T_{max}$ Equation (Eq. 15-E-1) Parameters												Soil Failure Limit State		
Layer Number	**z (ft)**	**S_v (ft)**	**$^{*}R_cJ_i$ (kips/ft)**	**S_{global} (ksf)**	**S_{local} (ksf)**	**D_{tmax}**	**F_f**	**Φ_g**	**Φ_{local}**	**Φ_{fb}**	**Φ_{fs}**	**$^{+}T_{max}$ (kips/ft) (Equation 15-E-1)**	**Factored ε_{rein} (%)**		**$^{\#}T_{al}$ Corresponding to J_i (kips/ft)**
10 (top)	1.33	2.33	8.6	4.30	3.69	0.220	N/A	0.193	0.92	1.0	1.0	0.067	0.94		0.67
9	3.33	2.00	8.6	4.30	4.30	0.372	N/A	0.193	1.00	1.0	1.0	0.105	1.46		0.67
8	5.33	2.00	8.6	4.30	4.30	0.523	N/A	0.193	1.00	1.0	1.0	0.147	2.06		0.67
7	7.33	2.00	8.6	4.30	4.30	0.674	N/A	0.193	1.00	1.0	1.0	0.190	2.65		0.67
6	9.33	2.00	8.6	4.30	4.30	0.825	N/A	0.193	1.00	1.0	1.0	0.233	3.25	≤ 2.5% (No; must increase stiffness)	0.67
5	11.33	2.00	8.6	4.30	4.30	0.976	N/A	0.193	1.00	1.0	1.0	0.275	3.84		0.67
4	13.33	2.00	8.6	4.30	4.30	1.00	N/A	0.193	1.00	1.0	1.0	0.282	3.94		0.67
3	15.33	2.00	8.6	4.30	4.30	1.00	N/A	0.193	1.00	1.0	1.0	0.282	3.94		0.67
2	17.33	2.00	8.6	4.30	4.30	1.00	N/A	0.193	1.00	1.0	1.0	0.282	3.94		0.67
1	19.33	1.67	8.6	4.30	5.15	1.00	N/A	0.193	1.09	1.0	1.0	0.258	3.60		0.67
Base of Wall	20											$\sum T_{max}$= 2.12			$\sum T_{al}$= 6.70

*Minimum stiffness needed to meet only the soil failure limit, considering all available geosynthetic reinforcement products.

+All values are on a load per unit of wall width basis in accordance with Article 11.10.6.4.1 of the AASHTO LRFD Bridge Design Manual (2020).

#For comparison to geogrid product MARV tensile strength that is not reduced by R_c (i.e., load per unit of reinforcement width basis).

To keep the peak reinforcement strains to less than 2.5% so that the soil failure limit state is met, the design stiffness values need to be increased. Through trial-and-error, the minimum stiffness values needed to keep the peak strains below 2.5% are as shown in Table 15-E-5.

Table 15-E-5 Creep stiffness values (i.e., at 2% strain and 1,000 h) for geogrids used in wall

Layer No.	Geogrid Designation	J_i (per Unit Width of Reinforcement, in kips/ft)	*R_c x J_i (per Unit Width of Wall, in kips/ft)
10	a	8.6	8.6
9	a	8.6	8.6
8	a	8.6	8.6
7	a	8.6	8.6
6	b	17.0	17.0
5	b	17.0	17.0
4	b	17.0	17.0
3	b	17.0	17.0
2	b	17.0	17.0
1	b	17.0	17.0

*This is the stiffness value which has been corrected for R_c to calculate T_{max}. Since R_c = 1.0, this stiffness is the same as the stiffness per unit of reinforcement width.

The input parameters to calculate T_{max} are recalculated as follows using the revised stiffness values:

$$S_{\text{global}} = \frac{J_{\text{ave}}}{(\text{H/n})} = \frac{\sum_{i=1}^{n} R_c J_i}{H} = (4 \times 1.0 \times 8.6 \text{ kips/ft} + 6 \times 1.0 \times 17.0 \text{ kips/ft})/20 \text{ ft} = 6.82 \text{ ksf}$$

$$\Phi_g = \alpha \left(\frac{S_{\text{global}}}{p_a}\right)^{\beta} = 0.16 \times (6.82 \text{ ksf}/2.11 \text{ ksf})^{0.26} = 0.217$$

$$\Phi_{fb} = \left(\frac{K_{abh}}{K_{avh}}\right)^{d} = (0.283/0.283)^{0.4} = 1.0$$

$$S_{\text{local}} = \left(\frac{R_c J}{S_v}\right)_i = (1.0 \times 17.0 \text{ kips/ft})/(2.0 \text{ ft}) = 8.50 \text{ ksf for Layer 6}$$

$$S_{localave} = \frac{\sum \left({}^{R_c J}/_{S_v}\right)_i}{n} = \frac{3.65 + 3 \times 4.25 + 5 \times 8.50 + 10.2}{10} = 6.91\ ksf$$

where, n = 10 is the number of reinforcement layers. Therefore, Φ_{local} is calculated as follows:

$$\Phi_{local} = \left(\frac{S_{local}}{S_{localave}}\right)^{0.5} = \left(\frac{8.5\ ksf}{6.91\ ksf}\right)^{0.5} = 1.11\ \ (layer\ 6)$$

For a flexible wall face, the facing stiffness factor is assumed to be 1.0.

Since c = 0, the cohesion factor, Φ_c = 1.0.

D_{tmax} does not change relative to the previous calculation (i.e., D_{tmax} for Layer 6 is 0.825).

T_{max} for Layer 6 is re-calculated as follows:

$$T_{max} = S_v \left[H\gamma_r D_{tmax} + \left(\frac{H_{ref}}{H}\right) S\gamma_f + LL \right] K_{avh}\Phi_{fb}\Phi_g\Phi_{fs}\Phi_{local}\Phi_c$$

$$T_{max} = 2.0\ ft \left[20ft \times 0.130\ kcf \times 0.825 + \left(\frac{20\ ft}{20\ ft}\right) 0\ ft \times 0.130\ kcf + 0 \right] 0.283 \times 1.0 \times 0.217 \times 1.0 \times 1.11 \times 1.0$$

T_{max} = 0.292 kips/ft

T_{max}, and the calculated parameters needed to calculate T_{max}, are summarized in Table 15-E-6 for the rest of the layers.

15-E-5.3 Calculations for Soil Failure Limit State Design (Service I)

Using Equation 15-14, with load factor γ_{sf} = 1.2 and resistance factor ϕ_{sf} = 1.0 (Table 15-5), the factored reinforcement strain corresponding to Layer 10 is computed as:

$$\varepsilon_{rein} = \frac{\gamma_{p-EVsf} T_{max}}{\phi_{sf} R_c J_i} = \frac{1.2 \times 0.060 \frac{kips}{ft}}{1.0 \times 1.0 \times 8.6 \frac{kips}{ft}} \times 100\% = 0.83\% \leq 2.5\% \quad OK$$

For Layer 6, using the revised layer stiffness values:

$$\varepsilon_{rein} = \frac{\gamma_{p-EVsf} T_{max}}{\phi_{sf} R_c J_i} = \frac{1.2 \times 0.292 \frac{kips}{ft}}{1.0 \times 1.0 \times 17.0 \frac{kips}{ft}} \times 100\% = 2.06\% \leq 2.5\% \quad OK$$

See Table 15-E-6 for the calculation results for the rest of the layers. As can be seen in the table, the new (increased) stiffness values are adequate to meet the soil failure limit criterion for all layers.

To estimate the equivalent tensile strength that corresponds to the stiffness values needed to meet the soil failure limit state criterion of 2.5% strain maximum, use the relationships provided in Allen and Bathurst (2019), or alternatively use the product line specific relationships provided in NTPEP (2019, or most current values). Allen and Bathurst (2019) recommend the following generic relationship between creep stiffness and ultimate tensile strength for geogrids:

$$T_{ult} = 0.17 J_i \qquad (15\text{-E-}28)$$

For the two stiffness values required to meet the soil failure limit state, the approximate ultimate tensile strength per ft of wall width needed is:

T_{ult} = 0.17 x (8.6 kips/ft) = 1.46 kips/ft (applicable to Layer 10)

T_{ult} = 0.17 x (17.0 kips/ft) = 2.89 kips/ft (applicable to Layer 6)

To determine T_{al}, divide T_{ult} by RF = 1.12 x 1.5 x 1.3 = 2.18

Therefore, the approximate long-term tensile strengths implied by the stiffness required for the soil failure limit state for the reinforcement product (i.e., per ft of reinforcement product width) are:

T_{al} = (1.46 kips/ft)/2.18 = 0.67 kips/ft (applicable to Layer 10)

T_{al} = (2.89 kips/ft)/2.18 = 1.32 kips/ft (applicable to Layer 6)

15-E-5.4 Calculations for Reinforcement Rupture Limit State (Strength I)

Since no live load is present, the required long-term reinforcement strength (T_{al}) for Layer 6 is computed using Equation 15-E-5, solving for T_{al}.

The minimum required value of reinforcement product T_{al} and T_{ult}, on a strength per reinforcement width basis, for Layer 6 is therefore:

$$T_{al} \geq \frac{\gamma_{p-EV} T_{max}}{\phi_{rr} R_c} = \frac{1.35 \times 0.292 \frac{kips}{ft}}{0.80 \times 1.0} = 0.49 \frac{kips}{ft}$$

$$T_{ult} = T_{al} RF_{ID} RF_{CR} RF_D = 0.49 \times 1.12 \times 1.5 \times 1.3 = 1.07 \frac{kips}{ft}$$

For layer 6, T_{al} for reinforcement rupture is less than T_{al} needed to achieve the stiffness required for the soil failure limit state (i.e., 0.49 kips/ft << 1.32 kips/ft). Therefore, the soil failure limit state controls the design. See Table 15-E-6 for the calculation results for the rest of the layers.

15-E-5.5 Calculations for Pullout Limit State Design (Strength I)

The default pullout parameters α and F* specified in AASHTO (2020) are used for this example design. For geosynthetic reinforcement, α = 0.8 and F* = 0.67×tan ϕ. Since the design ϕ = 34°, F* = 0.67 × tan 34° = 0.452.

The vertical stress, σ_v, over the reinforcement anchorage length, L_e, can be approximated as:

$$\sigma_v = z\gamma_r + S_{sur}\gamma_f \quad \text{(15-E-29)}$$

Where,

z = depth of the reinforcement layer below the wall top,

S_{sur} = surcharge height directly above the active zone/resistant zone boundary at the layer,

γ_r = unit weight of reinforced soil backfill, and

γ_f = unit weight of surcharge soil.

Note that the AASHTO (2020) specifications allow the vertical stress to be calculated at the mid-point of L_e relative to the soil surface immediately above the layer at that location. Equation 15-E-29 is a simpler and slightly conservative version of this calculation (for design). Since pullout is usually most critical near the wall top, this example pullout calculation is carried out for Layer 10. Therefore, for Layer 10, the vertical stress used for the pullout calculation is:

$$\sigma_v = (1.33 \text{ ft})(0.13 \text{ kcf}) + (0)(0.13 \text{ kcf}) = 0.173 \text{ ksf}$$

Combining equations 15-E-15 and 15-E-16 and solving for L_e, the required factored length of reinforcement in the resistant zone (i.e., behind the active wedge) is:

$$L_e = \frac{\gamma_{p-EV} T_{max}}{\phi_{po} C(\alpha F^*)\sigma_v R_c} \quad \text{(15-E-30)}$$

Where,

C = an overall reinforcement surface geometry factor (set at 2 for strip, grid and sheet type reinforcements).

As before, R_c = 1.0 and all other parameters and their values have been defined earlier. For layer 10:

$$L_e = \frac{1.35 \times 0.060 \frac{kips}{ft}}{0.70 \times 2(0.8 \times 0.452)(0.173\ ksf)1.0} = 0.925\ ft$$

To determine the total reinforcement length needed, L, the length of reinforcement within the active zone, L_a, must be calculated. For geosynthetic walls, the active zone is assumed to be bounded by the Rankine active zone (wedge), illustrated in Figure 15-E-2. L_a is calculated as follows for a vertical wall (at layer 10):

$$L_a = (H - z) \tan(45° - \phi_r/2) = (20 \text{ ft} - 1.33 \text{ ft}) \tan(45° - 34°/2) = 9.93 \text{ ft}$$

The minimum length allowed for L_e is 3 ft (AASHTO 2020), which is greater than the calculated L_e required for pullout for layer 10. Therefore, using L_e = 3 ft, the total reinforcement length required for layer 10 is:

$$L = L_a + L_e = 9.93 \text{ ft} + 3 \text{ ft} = 12.9 \text{ ft}$$

Pullout calculation results for the other layers are summarized in Table 15-E-6.

It should be recalled that the minimum length of reinforcement for typical reinforced soil walls is 0.7H = 0.7×(20 ft) = 14 ft. Therefore, pullout does not control the reinforcement length required. Note that other limit state design calculations can result in greater reinforcement length, such as external stability (e.g., sliding) or global stability.

15-E-5.6 Calculations for Determination of T_{max} + T_{md} (Extreme Event I - Seismic)

The calculation of T_{max} as described and carried out earlier in this example using the Stiffness Method is also applicable for seismic design. T_{md}, the incremental dynamic inertia force per reinforcement layer, must be added to T_{max} using superposition to determine the total reinforcement load for each layer during seismic loading.

T_{md} is calculated using equations 15-E-17 through 15-E-19 as follows:

$$A_s = \text{PGA} \times F_{pga} = 0.50g$$

(Note: the site PGA and F_{pga} is determined from seismic maps provided in GDM Chapter 6; for this example the value of A_s has been arbitrarily picked for illustration purposes, as this example is not for a specific site).

Assume a maximum lateral deflection of 2 inches is allowed/anticipated. Using Equation 15-E-18, k_h is determined as follows:

$$k_h = 0.74 A_s \left(\frac{A_s}{d}\right)^{0.25} = 0.74 \times 0.50g \times \left(\frac{0.50}{2}\right)^{0.25} = 0.262g$$

The inertial force, P_i, is calculated using Equation 15-E-19 as follows:

$$P_i = k_h\left(\gamma_r \times A_{active} + \gamma_{facing} \times T_f \times H\right) = 0.262 \times \left(0.130\ kcf \times 0.5 \times \left(20\ ft \times Tan\left(45^o - \frac{34^o}{2}\right)\right) \times 20\ ft + 0.0\ kcf \times 0\ ft \times 0\ ft\right) = 3.62\frac{kips}{ft}$$

And therefore, T_{md} is calculated using Equation 15-E-17 as shown below:

$$T_{md} = \left(\frac{P_i}{n}\right) = \frac{3.62\frac{kips}{ft}}{10} = 0.362\frac{kips}{ft}$$

Note that the weight of any facing was not included in this calculation. If the facing is welded wire, the additional weight would be insignificant. If a second stage concrete facia is added, the weight of that facing should be included in the determination of T_{md}.

The load factor used for Extreme Event I (seismic) is equal to 1.0, and is applied to both the static portion and dynamic portion of the loading, as the probability of failure used for this limit state is much higher than what is used for the Strength Limit state. The use of a higher probability of failure is due to the low probability of occurrence of this load combination as well as greater tolerance for deformation and damage allowed, simply targeting no collapse for life safety. The total load per reinforcement layer during seismic shaking, T_{totalf}, is then calculated using superposition (Equation 15-E-20) as follows, for Layer 6):

$$T_{totalf} = \gamma_{seis}(T_{max} + T_{md}) = 1.0\left(0.292\frac{kips}{ft} + 0.362\frac{Kips}{ft}\right) = 0.654\frac{kips}{ft}$$

For seismic pullout design, T_{totalf} is used. However, for reinforcement rupture and connection rupture under seismic loading, the static and dynamic components of the reinforcement load must be handled separately. The reason for this is that the strength required to resist T_{max} must include the effects of creep because it is a sustained load, but the strength required to resist T_{md} should not include the effects of creep due to the transient nature of T_{md}.

15-E-5.7 Calculations for Reinforcement Rupture (Extreme Event I - Seismic)

Using equations 15-E-21, 15-E-22, and 15-E-23, T_{ult} for static portion of load at Layer 6 is calculated as follows:

$$S_{rs} = \frac{\gamma_{seis} T_{max} RF}{\phi R_c} = \frac{1.0 \times 0.292 \frac{kips}{ft} \times 2.18}{1.0 \times 1.0} = 0.636 \frac{kips}{ft}$$

T_{ult} for dynamic portion of load at Layer 6 is calculated as follows:

$$S_{rt} = \frac{\gamma_{seis} T_{md} RF_{ID} RF_D}{\phi R_c} = \frac{1.0 \times 0.362 \frac{kips}{ft} \times 1.12 \times 1.3}{1.0 \times 1.0} = 0.527 \frac{kips}{ft}$$

Therefore, the minimum required strength per unit width of reinforcement is as follows:

$T_{ult} = S_{rs} + S_{rt} = 0.636$ kips/ft + 0.527 kips/ft = 1.16 kips/ft

$T_{al} = 1.16$ kips/ft/2.18 = 0.532 kips/ft

For the soil failure limit in the Service Limit State, T_{al} that corresponds to the stiffness needed is 1.32 kips/ft >> 0.532 kips/ft. Therefore, the soil failure limit is still controlling the reinforcement design.

15-E-5.8 Calculations for Pullout Limit State Design (Extreme Event I - Seismic)

Using equations 15-E-27 and 15-E-29, L_e for Layer 10 (i.e., at the wall top) is determined as follows:

$\sigma_v = z\gamma_r + S_{sur}\gamma_f$

$\sigma_v = (1.33 \text{ ft})(0.13 \text{ kcf}) + (0)(0.13 \text{ kcf}) = 0.173$ ksf

$$L_e = \frac{\gamma_{seis}(T_{max} + T_{md})}{\phi C(0.8\alpha F^*)\sigma_v R_c} = \frac{1.0\left(0.060 \frac{kips}{ft} + 0.362 \frac{kips}{ft}\right)}{1.0 \times 2 \times (0.8 \times 0.8 \times 0.452) \times 0.173\ kcf \times 1.0}$$

$L_e = 4.21$ ft

$L_a = (H - z) \tan(45° - \phi_r/2) = (20 \text{ ft} - 1.33 \text{ ft}) \tan(45° - 34°/2) = 9.93$ ft

$L = L_a + L_e = 9.93$ ft + 4.21 ft = 14.1 ft

See Table 15-E-6 for the calculation results for the rest of the layers with regard to pullout length required.

15-E-5.9 Calculations to Check to Make Sure Stiffness and Strength Required are Properly Matched (Extreme Event I, Seismic)

If a substantial increase in tensile strength is required to achieve internal stability for Strength Limit or Extreme Event I (seismic) Limit loading, the stiffness needed to obtain the increased tensile strength required must be determined, T_{max} recalculated, and all limit states recalculated. However, the tensile strength needed for strength and seismic limit design did not increase relative to what was required for the Service limit state. Therefore, no recalculations are required in this case.

15-E-5.10 Results of Example 1 Design Calculations

These calculation results for the Stiffness Method are summarized in Table 15-E-6, and are plotted and compared to design calculation results using the Simplified Method in figures 15-E-3, 15-E-4, and 15-E-5.

In summary, for the final internal stability design for Example 1, the following would be specified with regard to reinforcement properties and spacing for the optimized design, and the following observations can be made:

- The vertical spacing of reinforcements is 2 ft throughout the wall height, and the coverage ratio is a minimum of 1.0. Again, this large a spacing is used in this example to facilitate making direct comparisons with the examples that follow easier.
- The minimum reinforcement length for internal stability (i.e., pullout) is 14 ft for the Strength Limit, and all layers except the top layer for seismic design did not exceed this minimum length for both T_{max} methods. The top layer length required is 14.1 ft for seismic design for the Stiffness Method (slightly less than this for the Simplified Method), which is slightly greater than the 0.7H minimum. The longer reinforcement length due to pullout is consistent with good detailing for MSE walls in AASHTO (2020) LRFD Article 11.10.7.4.
- Assuming a PET uniaxial geogrid, to meet reinforcement rupture requirements, the reinforcement must have a minimum short-term (ultimate) and long-term (i.e., T_{al}) tensile strength as tabulated in Table 15-E-6. The strength and stiffness needed to meet the Soil Failure Limit State controls the design for all layers. Note that these values are based on strength per unit of reinforcement width. Final selection of reinforcements result in a total T_{al} for the wall section of 10.6 kips/ft for the Stiffness Method and 11.9 kips/ft for the Simplified Method if the minimum strength needed is set at 0.67 kips/ft based on product availability.
- Overall, the required strength and stiffness of the reinforcement needed is in the low to mid-range of the geogrid product lines available. The Stiffness Method requires less reinforcement than the Simplified Method in the bottom portion of the wall, and in this case seismic does not control the design. The ground acceleration used represents what would be included in Seismic Zone 4, which is the highest seismic zone.

Table 15-E-6 Summary of Example 1 wall design calculations using Stiffness Method and R_c = 1.0 (Service, Strength, and Extreme Event I Limit States): (a) Calculation of T_{max}, (b) Service and Strength Limit State calculations, and (c) Extreme Event I (seismic) Limit State calculations.

a)	T_{max} Equation (Eq. 15-E-1) Parameters											Unfactored maximum reinforcement load
Layer Number	**z (ft)**	**S_v (ft)**	**R_cJ_i (kips/ft)**	**S_{global} (ksf)**	**S_{local} (ksf)**	**D_{tmax}**	**F_f**	**Φ_g**	**Φ_{local}**	**Φ_{fb}**	**Φ_{fs}**	**$^{+}T_{max}$ (kips/ft)**
10 (top)	1.33	2.33	8.6	6.82	3.65	0.220	N/A	0.217	0.73	1.0	1.0	0.060
9	3.33	2.00	8.6	6.82	4.25	0.372	N/A	0.217	0.79	1.0	1.0	0.093
8	5.33	2.00	8.6	6.82	4.25	0.523	N/A	0.217	0.79	1.0	1.0	0.131
7	7.33	2.00	8.6	6.82	4.25	0.674	N/A	0.217	0.79	1.0	1.0	0.168
6	9.33	2.00	17.0	6.82	8.50	0.825	N/A	0.217	1.11	1.0	1.0	0.292
5	11.33	2.00	17.0	6.82	8.50	0.976	N/A	0.217	1.11	1.0	1.0	0.345
4	13.33	2.00	17.0	6.82	8.50	1.00	N/A	0.217	1.11	1.0	1.0	0.354
3	15.33	2.00	17.0	6.82	8.50	1.00	N/A	0.217	1.11	1.0	1.0	0.354
2	17.33	2.00	17.0	6.82	8.50	1.00	N/A	0.217	1.11	1.0	1.0	0.354
1	19.33	1.67	17.0	6.82	10.2	1.00	N/A	0.217	1.21	1.0	1.0	0.323
Base of wall	20											$\sum T_{max}$= 2.47

b)			Reinforcement Rupture (Strength Limit)		Soil Failure (Service Limit)			Pullout (Strength Limit)	
Layer Number	**z (ft)**	**Reinforcement Product**	**#Minimum Required Strength per Unit Width of Reinforcement**		**Factored ε_{rein} (%)**	**#Tensile Strength Corresponding to Reinforcement Stiffness Required**		**Anchorage length L_e (ft)**	
			T_{al} (kips/ft)	**$T_{ult} = T_{al} \times RF$ (kips/ft)**		**T_{al} (kips/ft)**	**$T_{ult} = T_{al} \times RF$ (kips/ft)**	**Required**	**Minimum allowed**
10 (top)	1.33	Geogrid a	0.10	0.22	0.83	0.67	1.46	0.923	
9	3.33	Geogrid a	0.16	0.34	1.30	0.67	1.46	0.575	
8	5.33	Geogrid a	0.22	0.48	1.85	0.67	1.46	0.506	
7	7.33	Geogrid a	0.29	0.62	2.38	0.67	1.46	0.474	
6	9.33	Geogrid b	0.49	1.07	2.06	1.32	2.89	0.641	< 3.0
5	11.33	Geogrid b	0.58	1.27	2.44	1.32	2.89	0.625	(OK)
4	13.33	Geogrid b	0.60	1.30	2.50	1.32	2.89	0.544	
3	15.33	Geogrid b	0.60	1.30	2.50	1.32	2.89	0.473	
2	17.33	Geogrid b	0.60	1.30	2.50	1.32	2.89	0.418	
1	19.33	Geogrid b	0.55	1.19	2.28	1.32	2.89	0.343	
Base of wall	20		$\sum T_{al}$= 4.17	$\sum T_{ult}$= 9.12		$\sum T_{al}$= 10.6	$\sum T_{ult}$= 23.2		

≤ 2.5% (OK)

Table 15-E-6, continued

Summary of Example 1 wall design calculations using Stiffness Method and R_c = 1.0 (Service, Strength, and Extreme Event I Limit States): (c) Extreme Event I (seismic) Limit State calculations.

c)		Soil Failure (Service Limit, for Comparison)	Reinforcement Rupture (Extreme Event I Limit)		Pullout (Extreme Event I Limit)		
Layer Number	z (ft)	#Tensile Strength T_{al} Corresponding to Reinforcement Stiffness Required (kips/ft)	#Minimum Required Strength per Unit Width of Reinforcement		Anchorage length L_{eseis} (ft)		Total Reinforcement Length (ft)
			T_{al} (kips/ft)	$T_{ult} = T_{al} \times RF$ (kips/ft)	Required	Minimum allowed	(minimum is 0.7H = 14 ft)
10 (top)	1.33	0.67	0.30	0.66	4.21		14.1
9	3.33	0.67	0.33	0.73	1.82	< 3.0 (No, so pullout controls length, but only at wall top)	10.7
8	5.33	0.67	0.37	0.81	1.23		9.0
7	7.33	0.67	0.41	0.90	0.96		7.7
6	9.33	1.32	0.53	1.16	0.93		6.6
5	11.33	1.32	0.59	1.28	0.83		5.4
4	13.33	1.32	0.59	1.30	0.71		4.3
3	15.33	1.32	0.59	1.30	0.62		3.1
2	17.33	1.32	0.59	1.30	0.55		2.0
1	19.33	1.32	0.56	1.23	0.47		0.8
Base of wall	20	$\sum T_{max}$= 10.6	$\sum T_{al}$= 4.89	$\sum T_{ult}$= 10.7			

+These values are on a load per unit of wall width basis in accordance with Article 11.10.6.4.1 of the AASHTO LRFD Bridge Design Manual (AASHTO 2020).

#For comparison to geogrid product tensile strength that is not reduced by R_c (i.e., load per unit of reinforcement width basis).

*T_{md} for all reinforcement layers is 0.362 kips/ft.

Figure 15-E-3 Comparison of Stiffness Method internal stability design to the Simplified Method design, for Service, Strength, and Extreme Event I (seismic) limit states (Example 1).

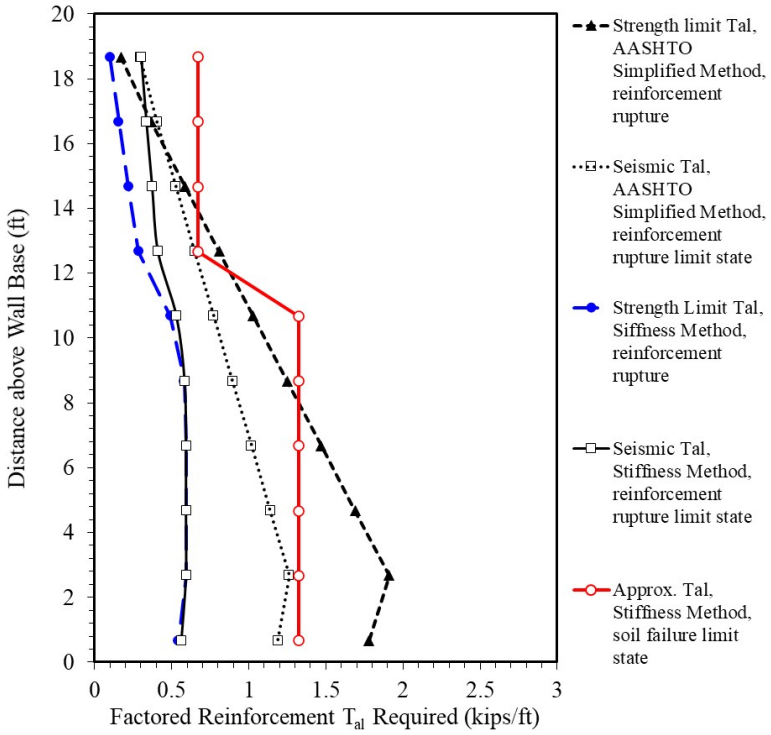

Figure 15-E-4 Comparison of Stiffness Method internal stability design to the Simplified Method design, for Extreme Event I (seismic) limit state, pullout (Example 1).

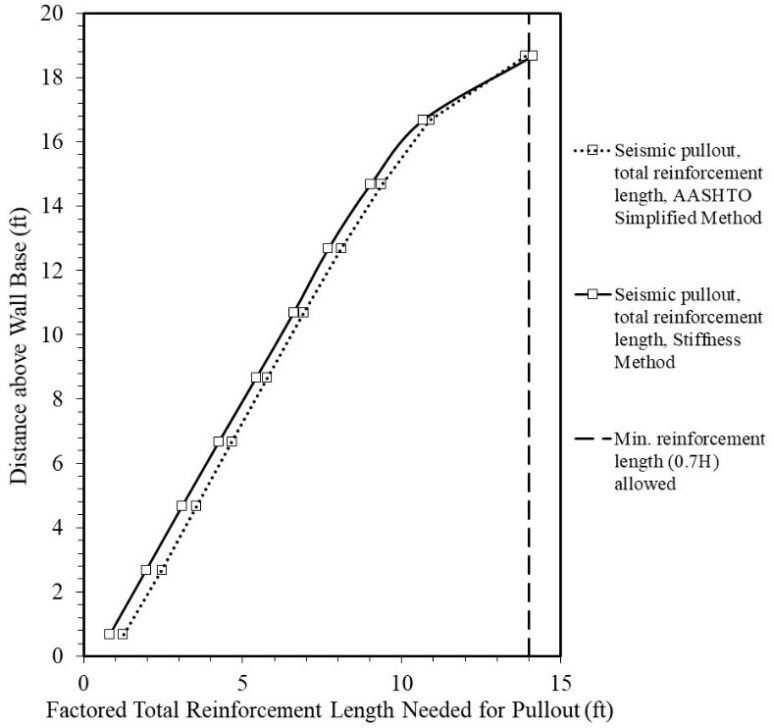

15-E-6 Stiffness Method Design Example 2: Block Faced Geosynthetic Wall with Mechanical Connections, R_c = 1.0

15-E-6.1 General

This second example is also a fairly simple design case. Subsequent examples will add features that increase in complexity to illustrate how various scenarios are handled when using the Stiffness Method.

Figure 15-E-5 shows a cross-section of the wall for this design example, and material properties are provided in Table 15-E-7. The reinforcement coverage ratio, R_c is set at 1.0. Assume for this example that polyester (PET) geogrid will be used for the soil reinforcement. Assume dry cast concrete blocks will be used for the facing. A mechanical facing-geogrid connection will be assumed, so the connection strength is a constant fraction of the geogrid ultimate tensile strength and is not affected by the normal force between the blocks in the facing column. The wall backfill is assumed to be a well-graded gravelly sand, with no cohesion.

The scope of this design example is limited to the service (soil failure limit only), strength, and Extreme Event I (seismic) limit states. Furthermore, for simplicity, live loads are not included in the calculations to follow. It is also assumed that the foundation soil has sufficient shear strength to prevent global instability, bearing capacity failure and excessive settlement. For seismic design, assume that the ground acceleration, A_s, is 0.50g.

Table 15-E-7 Design properties for wall

Property	Design Value
Moist soil unit weight (pcf)	130
Triaxial drained peak friction angle ϕ_{tx} (°)	34
Min. available, but not wall system specific, 1,000 hr, 2% secant J_i x R_c (kips/ft)	8.6 × 1.0 = 8.6
RF_{ID} RF_{CR} RF_D = RF	1.12x1.5x1.3 = 2.18
Coverage ratio, R_c	1.0
Facing block unit weight, γ_{block} (pcf)	120
Facing block height (ft)	0.67
Facing block width, W_u (face to tail) (ft)	1.0
Connection strength as fraction of T_{ult}, CR_u	0.75

Figure 15-E-5 Wall geometry and preliminary PET reinforcement layout for Design Example 2.

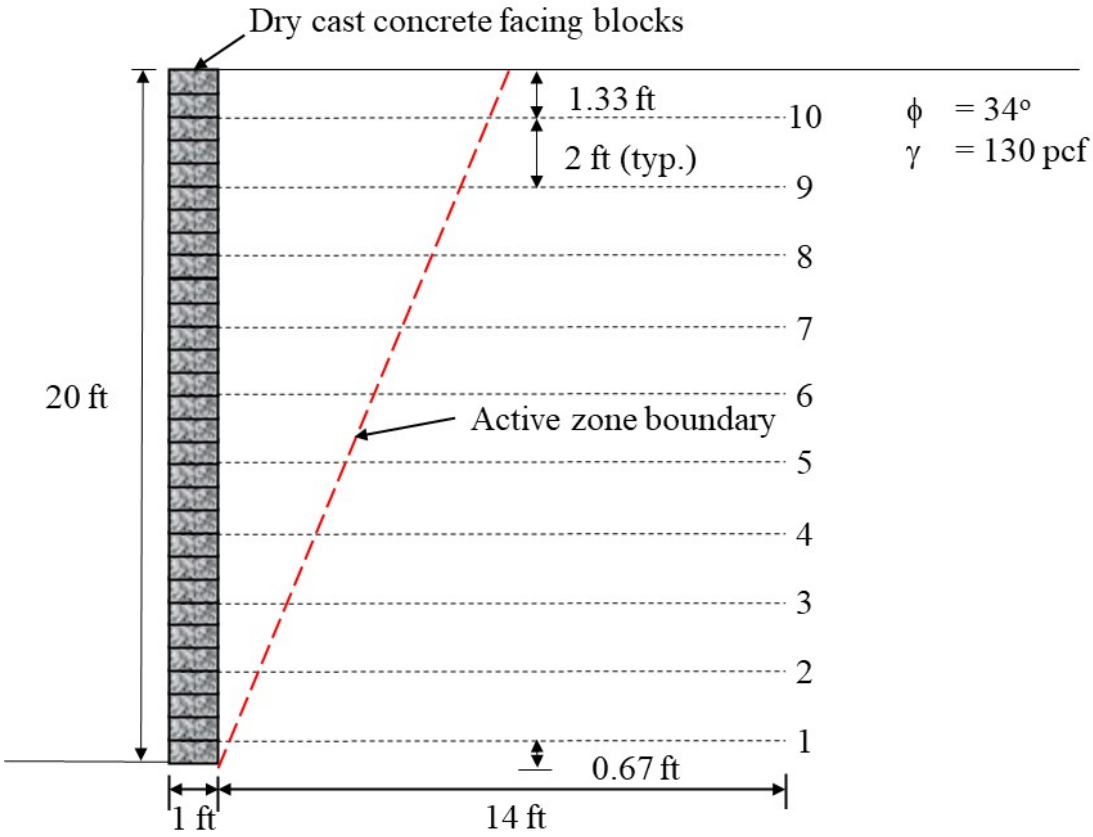

The wall geometry is based on Figure 15-E-5. As is true in Example 1, Example 2 calculations are demonstrated for one of the middle layers (i.e., Layer 6 in Figure 15-E-5, and for the soil failure and pullout limit states, Layer 10 is also used to illustrate calculations).

S = equivalent uniform height of surcharge = 0 ft. Since the wall in this example is vertical ($\omega = 0$) and is using the same soil as used for Example 1, $K_{abh} = K_{avh}$ 0.283, and $\Phi_{fb} = 1.0$.

Since the soil failure limit state usually controls the amount of reinforcement required, this limit state is evaluated first, and T_{max} is calculated, for the wall design.

15-E-6.2 Calculations for Soil Failure Limit State Design (Service I)

As is true for Example 1, the goal of this limit state is to ensure that the factored reinforcement strain in each layer is less than the target maximum strain in the wall required to prevent a contiguous shear surface through the backfill soil from developing (i.e., soil failure limit state). The factored reinforcement peak strain for each layer should be 2.0% or less per AASHTO (2020) for a stiff faced wall such as the modular block faced wall in this example. Some trial-and-error is typically required to establish what reinforcement stiffness values are required, starting with the stiffness values required to meet the soil failure limit, as the soil failure limit often controls the design of geosynthetic walls. As a first trial, use the minimum 1,000-hour 2% strain secant stiffness available for geosynthetic reinforcement products, J_i = 8.6 kips/ft per unit of reinforcement width for all layers (see Table 15-E-7).

The contributing factors, coefficients and parameters that comprise the T_{max} equation can be found in Allen and Bathurst (2015) and Table 15-E-1. To calculate T_{max}, the reinforcement stiffness must be per unit of wall width rather than per unit of reinforcement product width; hence, R_cJ_i must be used where the reinforcement stiffness value is required. Therefore, the parameters used to determine T_{max} are calculated as follows:

$S_{\text{global}} = \frac{J_{\text{ave}}}{(\text{H/n})} = \frac{\sum_{i=1}^{n} R_c J_i}{H}$ = (10 × 1.0 × 8.6 kips/ft)/20 ft = 4.30 ksf (applies to whole wall section)

$\Phi_g = \alpha \left(\frac{S_{\text{global}}}{p_a}\right)^{\beta}$ = 0.16 × (4.30 ksf/2.11 ksf)$^{0.26}$ = 0.193 (applies to whole wall section)

$\Phi_{fb} = \left(\frac{K_{ab}}{K_{av}}\right)^{d}$ = (0.283/0.283)$^{0.4}$ = 1.0 (applies to whole wall section)

$S_{\text{local}} = \left(\frac{J}{S_v}\right)_i$ = (8.6 kips/ft)/(2.0 ft) = 4.30 ksf for Layer 6

$$S_{localave} = \frac{\sum \left(J/S_v\right)_i}{n} = \frac{3.69 + 8 \times 4.30 + 5.15}{10} = 4.32\ ksf$$

where, n = 10 is the number of reinforcement layers. Therefore, Φ_{local} is calculated as follows:

$$\Phi_{local} = \left(\frac{S_{local}}{S_{localave}}\right)^{0.5} = \left(\frac{4.30\ ksf}{4.32\ ksf}\right)^{0.5} = 1.00\ \ (layer\ 6)$$

To determine the facing stiffness factor, one must first determine the facing stiffness parameter, F_f. To calculate the facing stiffness parameter F_f, the equivalent height of an unjointed facing column that is approximately 100% efficient in transmitting moment through the height of the facing column, h_{eff}, must be determined. Since the facing stiffness factor Φ_{fs} is intended to be a single value for the wall, a single representative value of h_{eff} must be selected. Typically, h_{eff} is set equal to the reinforcement vertical spacing in modular block-type structures since the reinforcement is located at the horizontal joints between facing units. For blocks that do not have a reinforcement layer at the horizontal joints, these facings will have better interlock and moment transfer from block to block. If the reinforcement spacing is non-uniform, the smallest predominate spacing (e.g., for 3 or more layers) should be used for this calculation. Smaller h_{eff} values will lead to more conservative (safer) design because the facing stiffness factor will be larger.

In this example, the vertical spacing is reasonably uniform throughout the wall height at 2.0 ft; thus, h_{eff} = 2.0 ft is selected in the calculations to follow. The facing stiffness parameter F_f is calculated using h_{eff} = 2.0 ft, H = 20 ft, W_u = b = 1 ft, and E = 157,000 ksf. This value for E is for dry cast concrete, which has a typical value of E = 209,000 ksf, but has been reduced here to reflect the non-uniform cross-section of the facing unit (typical for modular dry cast concrete blocks). Therefore:

$$F_f = \frac{1.5H^3 p_a}{Eb^3\left(\frac{h_{eff}}{H}\right)} = \frac{1.5(20\ ft)^3(2.11\ ksf)}{(157{,}000\ ksf)(1\ ft^3)\left(\frac{2\ ft}{20\ ft}\right)} = 1.61 \text{ (applies to whole wall section)}$$

and the facing stiffness factor is:

$$\Phi_{fs} = \eta\left(\left(\frac{S_{global}}{p_a}\right)F_f\right)^{\kappa} = 0.57 \times \left(\left(\frac{4.30\ ksf}{2.11\ ksf}\right) \times 1.61\right)^{0.15} = 0.681 \text{ (applies to whole wall section)}$$

Since c = 0, the cohesion factor, Φ_c = 1.0.

D_{tmax} does not change relative to the previous calculation (i.e., D_{tmax} for Layer 6 is 0.825).

T_{max} for Layer 6 is calculated as follows:

$$T_{max} = S_v\left[H\gamma_r D_{tmax} + \left(\frac{H_{ref}}{H}\right)S\gamma_f + LL\right]K_{avh}\Phi_{fb}\Phi_g\Phi_{fs}\Phi_{local}\Phi_c$$

$$T_{max} = 2.0\ ft\left[20ft \times 0.130\ kcf \times 0.825 + \left(\frac{20\ ft}{20\ ft}\right)0\ ft \times 0.130\ kcf + 0\right]0.283 \times 1.0 \times 0.193 \times 0.681 \times 1.00 \times 1.0 = 0.159\frac{\text{kips}}{\text{ft}} \text{ of wall width}$$

Using Equation 15-14 with load factor γ_{sf} = 1.2, and resistance factor ϕ_{sf} = 1.0 (Table 15-5), the factored reinforcement strain corresponding to layer 6 is computed as:

$$\varepsilon_{rein} = \frac{\gamma_{p-EVsf} T_{max}}{\phi_{sf} R_c J_i} = \frac{1.2 \times 0.159 \frac{kips}{ft}}{1.0 \times 1.0 \times 8.6 \frac{kips}{ft}} \times 100\% = 2.21\% \leq 2\% \quad No$$

As shown for Example 1 (Equation 15-E-28), the equivalent ultimate tensile strength that corresponds to the stiffness values needed to meet the soil failure limit state is equal to $0.17J_i$. For the stiffness value used in this first trial, the approximate ultimate tensile strength per ft of wall width needed is:

T_{ult} = 0.17 x (8.6 kips/ft) = 1.46 kips/ft (applicable to all layers for first trial)

To determine T_{al}, divide T_{ult} by RF = 1.12 x 1.5 x 1.3 = 2.18. Therefore, T_{al} per ft of wall width and per ft of reinforcement width, since R_c = 1.0, is:

T_{al} = (1.46 kips/ft)/2.18 = 0.67 kips/ft (applicable to all layers)

T_{max}, the calculated parameters needed to calculate T_{max}, and the predicted reinforcement strains for all the layers are summarized in Table 15-E-8 for the rest of the layers.

As can be seen in the table, the calculated factored strains are greater than 2% in the lower half of the wall, which exceeds the soil failure limit state strain criterion of 2% for stiff faced walls. Therefore, the reinforcement stiffness needs to be increased in the lower half of the wall. Through some trial-and-error, the soil failure limit state is met for this example using the stiffness values provided in Table 15-E-9.

Table 15-E-8 Summary of Example 2 wall design calculations using Stiffness Method considering only the Service Limit State, first trial using only the minimum stiffness geogrid product available.

	$^{+}T_{max}$ Equation (Eq. 15-E-1) Parameters												Soil Failure Limit State		
Layer Number	**z (ft)**	**S_v (ft)**	**$^{*}R_cJ_i$ (kips/ft)**	**S_{global} (ksf)**	**S_{local} (ksf)**	**D_{tmax}**	**F_f**	**Φ_g**	**Φ_{local}**	**Φ_{fb}**	**Φ_{fs}**	**$^{+}T_{max}$ (kips/ft) (Equation 15-E-1)**	**Factored ε_{rein} (%)**		**$^{\#}T_{al}$ Corresponding to J_i (kips/ft)**
10 (top)	1.33	2.33	8.6	4.30	3.69	0.220	1.61	0.193	0.92	1.0	0.681	0.046	0.64		0.67
9	3.33	2.00	8.6	4.30	4.30	0.372	1.61	0.193	1.00	1.0	0.681	0.071	1.00		0.67
8	5.33	2.00	8.6	4.30	4.30	0.523	1.61	0.193	1.00	1.0	0.681	0.101	1.40		0.67
7	7.33	2.00	8.6	4.30	4.30	0.674	1.61	0.193	1.00	1.0	0.681	0.130	1.81		0.67
6	9.33	2.00	8.6	4.30	4.30	0.825	1.61	0.193	1.00	1.0	0.681	0.159	2.21	≤ 2.0% (No; must increase stiffness)	0.67
5	11.33	2.00	8.6	4.30	4.30	0.976	1.61	0.193	1.00	1.0	0.681	0.188	2.62		0.67
4	13.33	2.00	8.6	4.30	4.30	1.00	1.61	0.193	1.00	1.0	0.681	0.192	2.68		0.67
3	15.33	2.00	8.6	4.30	4.30	1.00	1.61	0.193	1.00	1.0	0.681	0.192	2.68		0.67
2	17.33	2.00	8.6	4.30	4.30	1.00	1.61	0.193	1.00	1.0	0.681	0.192	2.68		0.67
1	19.33	1.67	8.6	4.30	5.15	1.00	1.61	0.193	1.09	1.0	0.681	0.176	2.45		0.67
Base of Wall	20											$\sum T_{max}$= 1.45			$\sum T_{al}$= 6.70

*****Minimum stiffness needed to meet only the soil failure limit, considering all geosynthetic reinforcement products, and not just the specific products available for the wall system (i.e., weaker than Geogrid A in this example).

$^{+}$All values are on a load per unit of wall width basis in accordance with Article 11.10.6.4.1 of the AASHTO *LRFD Bridge Design Manual* (AASHTO 2020).

$^{\#}$For comparison to geogrid product MARV tensile strength that is not reduced by R_c (i.e., load per unit of reinforcement width basis).

Table 15-E-9 Creep stiffness values (i.e., at 2% strain and 1,000 h) for geogrids used in wall

Layer No.	Geogrid Designation	J_i (per Unit Width of Reinforcement, in kips/ft)	*R_c x J_i (per Unit Width of Wall, in kips/ft)
10	a	8.6	8.6
9	a	8.6	8.6
8	a	8.6	8.6
7	a	8.6	8.6
6	b	14.5	14.5
5	b	14.5	14.5
4	b	14.5	14.5
3	b	14.5	14.5
2	b	14.5	14.5
1	b	14.5	14.5

*This is the stiffness value which has been corrected for R_c to calculate T_{max}.
Since R_c = 1.0, this stiffness is the same as the stiffness per unit of reinforcement width.

Using the Table 15-E-9 stiffness values, considering a total of 10 layers, S_{global} is recalculated as:

$$S_{\text{global}} = \frac{J_{\text{ave}}}{(\text{H/n})} = \frac{\sum_{i=1}^{n} R_c J_i}{H} = (4 \times 1.0 \times 8.6 \text{ kips/ft} + 6 \times 1.0 \times 14.5 \text{ kips/ft})/20 \text{ ft} = 6.07 \text{ ksf}$$

$$\Phi_g = \alpha \left(\frac{S_{\text{global}}}{p_a}\right)^{\beta} = 0.16 \times (6.07 \text{ ksf}/2.11 \text{ ksf})^{0.26} = 0.211$$

S_{local} is recalculated as:

$$S_{\text{local}} = \left(\frac{R_c J}{S_v}\right)_i = (1.0 \times 14.5 \text{ kips/ft})/(2.0 \text{ ft}) = 7.25 \text{ ksf for Layer 6}$$

$$S_{localave} = \frac{\sum \left({}^{R_c J}/_{S_v}\right)_i}{n} = \frac{3.69 + 3 \times 4.30 + 5 \times 7.25 + 8.68}{10} = 6.15\ ksf$$

where, n = 10 is the number of reinforcement layers. Therefore, Φ_{local} is recalculated as follows:

$$\Phi_{local} = \left(\frac{S_{local}}{S_{localave}}\right)^{0.5} = \left(\frac{7.25\ ksf}{6.15\ ksf}\right)^{0.5} = 1.09\ \ (Layer\ 6)$$

To determine the facing stiffness factor, the facing stiffness parameter, F_f does not change, and the facing stiffness factor is recalculated as:

$$\Phi_{fs} = \eta\left(\left(\frac{S_{global}}{p_a}\right)F_f\right)^{\kappa} = 0.57 \times \left(\left(\frac{6.07\ ksf}{2.11\ ksf}\right) \times 1.61\right)^{0.15} = 0.718$$

Since c = 0, the cohesion factor, $\Phi_c = 1.0$.

D_{tmax} remains unchanged.

T_{max} for Layer 6 is now recalculated as follows:

$$T_{max} = S_v\left[H\gamma_r D_{tmax} + \left(\frac{H_{ref}}{H}\right)S\gamma_f + LL\right]K_{avh}\Phi_{fb}\Phi_g\Phi_{fs}\Phi_{local}\Phi_c$$

$$T_{max} = 2.0\ ft\left[20ft \times 0.130\ kcf \times 0.825 + \left(\frac{20\ ft}{20\ ft}\right)0\ ft \times 0.130\ kcf + 0\right]0.283 \times 1.0 \times 0.211 \times 0.718 \times 1.09 \times 1.0$$

T_{max} = 0.199 kips/ft (load per unit of wall width)

T_{max}, and the recalculated parameters needed to calculate T_{max}, are summarized in Table 15-E-10 for the rest of the layers for the Service and Strength limit states.

Using Equation 15-14 with load factor γ_{sf} = 1.2, and resistance factor ϕ_{sf} = 1.0 (Table 15-5), the factored reinforcement strain corresponding to layer 10 is recomputed as:

$$\varepsilon_{rein} = \frac{\gamma_{p-EVsf}T_{max}}{\phi_{sf}R_cJ_i} = \frac{1.2 \times 0.044\frac{kips}{ft}}{1.0 \times 1.0 \times 8.6\frac{kips}{ft}} \times 100\% = 0.62\% \leq 2\% \quad OK$$

For layer 6:

$$\varepsilon_{rein} = \frac{\gamma_{p-EVsf}T_{max}}{\phi_{sf}R_cJ_i} = \frac{1.2 \times 0.199\frac{kips}{ft}}{1.0 \times 1.0 \times 14.5\frac{kips}{ft}} \times 100\% = 1.65\% \leq 2\% \quad OK$$

See Table 15-E-10 for the calculation results for the rest of the layers. Therefore, the soil failure limit state is met for all the reinforcement layers.

To estimate the equivalent tensile strength that corresponds to the stiffness values needed to meet the soil failure limit state criterion of 2% strain maximum, use the relationships provided in Allen and Bathurst (2019), i.e., $T_{ult} = 0.17J_i$, or alternatively use the product line specific relationships provided in NTPEP (2019).

For the two stiffness values required to meet the soil failure limit state, the approximate ultimate tensile strength per unit of wall width to obtain the stiffness needed is:

T_{ult} = 0.17 x (8.6 kips/ft) = 1.46 kips/ft (applicable to Layer 10)

T_{ult} = 0.17 x (14.5 kips/ft) = 2.47 kips/ft (applicable to Layer 6)

To determine T_{al}, divide T_{ult} by RF = 1.12 x 1.5 x 1.3 = 2.18

Therefore, the approximate long-term tensile strengths implied by the stiffness required for the soil failure limit state for the reinforcement product (i.e., per unit of wall width and reinforcement product width, since R_c = 1.0) are:

T_{al} = (1.46 kips/ft)/2.18 = 0.67 kips/ft (applicable to Layer 10)

T_{al} = (2.47 kips/ft)/2.18 = 1.13 kips/ft (applicable to Layer 6)

15-E-6.3 Calculations for Reinforcement Rupture Limit State (Strength I)

Since no live load is present, the required long-term reinforcement strength (T_{al}) for Layer 6 is computed using Equation 15-E-5.

The minimum required value of T_{al} and T_{ult} for Layer 6, on a strength per unit of reinforcement width basis (i.e., this value is what would be compared to the MARV of the tensile strength of specific reinforcement products), is therefore:

$$T_{al} \geq \frac{\gamma_{p-EV} T_{max}}{\phi_{rr} R_c} = \frac{1.35 \times 0.199 \frac{kips}{ft}}{0.80 \times 1.0} = 0.338 \frac{kips}{ft}$$

$$T_{ult} = T_{al} RF_{ID} RF_{CR} RF_D = 0.338 \times 1.12 \times 1.5 \times 1.3 = 0.737 \frac{kips}{ft}$$

For layer 6, T_{al} for reinforcement rupture is significantly less than T_{al} needed to achieve the stiffness required for the soil failure limit state (i.e., 0.338 kips/ft << 1.13 kips/ft).

15-E-6.4 Calculations for Connection Strength Design (Strength I)

To determine the minimum tensile strength needed at the connection to the facing, connection strength data for the facing block – geosynthetic combinations anticipated are needed. It has been assumed for this example that a mechanical type connection between the facing blocks and geogrid will be used (i.e., not dominated by friction).

For the purposes of this example and to be consistent with the approach taken in the current AASHTO (2020) specifications, the load and resistance factors for the connection rupture limit state are assigned the same values as those used for geosynthetic rupture limit state at locations away from the connection (i.e., $\gamma_{p\text{-}EVc} = \gamma_{p\text{-}EV}$ =1.35 and $\phi_{cr} = \phi_{rr}$ = 0.80), and $T_o = T_{max}$.

To determine the long-term connection strength available, since a mechanical connection is used in this example, the connection strength will not be a function of the normal load on the facing blocks. Expressed as a portion of T_{lot}, the roll specific tensile strength for the connection testing, the short-term connection strength $CR_u = {}^{T_{ultconn}}/_{T_{lot}}$ = 0.75. For this example, it will be assumed that this value of CR_u is applicable for all geogrids (this is likely not the case, but to keep the example as simple as possible, this assumption is made).

Equation 15-E-9 is used to calculate the minimum long-term connection strength needed, T_{ac}(required), which essentially is the factored connection load. For the purposes of this example and to be consistent with the approach taken in the current AASHTO (2020) specifications, the load and resistance factors for the connection rupture limit state are assigned the same values as those used for geosynthetic rupture limit state at locations away from the connection (i.e., $\gamma_{p\text{-}EVc} = \gamma_{p\text{-}EV} = 1.35$ and $\phi_{cr} = \phi_{rr} = 0.80$), and $T_o = T_{max}$.

Therefore, using the load side of the connection limit state design Equation 15-E-9, at Layer 6, the factored connection load is calculated as follows:

$$T_{ac}(required) = (\gamma_{p-EVc})T_0 = (1.35) \times 0.199 \frac{kips}{ft} = 0.269 \frac{kips}{ft} \text{ of wall width}$$

To determine the long-term connection strength available, since a mechanical connection is used in this example, the connection strength will not be a function of the normal load on the facing blocks, N. Using the resistance side of Equation 15-E-9 (i.e., the limit state equation for connection design), and the equation for T_{ac} (Equation 15-E-11), the available long-term connection strength available is calculated as follows, assuming that the minimum T_{ult} needed is equal to the T_{ult} needed to obtain the stiffness required to meet the soil failure limit state:

$$T_{ac}(available) = \phi_{cr} T_{ac} R_c = \frac{\phi_{cr} \times T_{ult} \times \left(\frac{CR_u}{RF_{CR}}\right) R_c}{RF_D} \qquad \text{(15-E-31)}$$

$$T_{ac}(available) = \frac{0.80 \times 2.47 kips/ft \times \left(\frac{0.75}{1.5}\right) 1.0}{1.3} = 0.760 \text{ kips/ft}$$

$0.269 \text{ kips/ft} < 0.760 \text{ kips/ft}$? OK

Combining Equation 15-E-9 with Equation 15-E-31 and solving for T_{ult}, at layer 6, can determine the minimum T_{ult} required to just satisfy connection strength requirements as follows:

$$T_{ult}(min.required) = \left(\frac{\gamma_{p-EVc}}{\phi_{cr} R_c}\right) T_0 RF_D RF_{CR} \left(\frac{1}{CR_u}\right) \qquad \text{(15-E-32)}$$

$$T_{ult}(min.required) = \left(\frac{1.35}{0.8 \times 1.0}\right) \times 0.199 \times 1.3 \times 1.5 \left(\frac{1}{0.75}\right) = 0.873 \frac{kips}{ft}$$

On a strength per unit of reinforcement width basis (and also strength per unit of wall width, since $R_c = 1.0$), this minimum required geosynthetic T_{ult} of 0.873 kips/ft is below the T_{ult} value of 2.47 kips/ft (i.e., a $T_{al} = 2.47/2.18 = 1.13$ kips/ft) estimated to provide the needed stiffness for the soil failure limit state. Therefore, the soil failure limit state is still controlling the tensile strength required at this point (i.e., only considering the Service and Strength Limit States).

15-E-6.5 Calculations for Pullout Limit State Design (Strength I)

The default pullout parameters α and F* specified in AASHTO (2020) are used for this example design and are the same as in Example 1 (α = 0.8 and F* = 0.452). The vertical stress, σ_v, over the reinforcement anchorage length, conservatively calculated using Equation 15-E-29, is the same as in Example 1 (0.173 ksf). Since pullout is usually most critical near the wall top, this example pullout calculation is carried out for Layer 10.

As before, R_c = 1.0. Using Equation 15-E-30, the required factored length of reinforcement in the resistant zone (i.e., behind the active wedge) for Layer 10 is calculated as follows:

$$L_e = \frac{\gamma_{p-EV} T_{max}}{\phi_{po} C(\alpha F^*)\sigma_v R_c}$$

$$L_e = \frac{1.35 \times 0.044 \frac{kips}{ft}}{0.70 \times 2(0.8 \times 0.452)(0.173\ ksf)1.0} = 0.678\ ft$$

To determine the total reinforcement length needed, L, the length of reinforcement within the active zone, L_a, must be calculated. For geosynthetic walls, the active zone is assumed to be bounded by the Rankine active zone (wedge). L_a is calculated as follows for a vertical wall (at layer 10):

$$L_a = (H - z) \tan(45° - \phi_r/2) = (20\ ft - 1.33\ ft) \tan(45° - 34°/2) = 9.93\ ft$$

The minimum length allowed for L_e is 3 ft (AASHTO 2020), which is greater than the calculated L_e required for pullout for layer 10. Therefore, using L_e = 3 ft, the total reinforcement length required for layer 10 is:

$$L = L_a + L_e = 9.93\ ft + 3\ ft = 12.9\ ft$$

Pullout calculation results for the other layers are summarized in Table 15-E-10.

It should be recalled that the minimum length of reinforcement for typical reinforced soil walls is 0.7H = 0.7×(20 ft) = 14 ft. Therefore, pullout does not control the reinforcement length required. Note that other limit state design calculations can result in greater reinforcement length, such as external stability (e.g., sliding) or global stability.

15-E-6.6 Calculations for Determination of T_{max} + T_{md} (Extreme Event I - Seismic)

The calculation of T_{max} as described and carried out earlier in this example using the Stiffness Method is also applicable for seismic design for the static portion of the reinforcement load. T_{md}, the incremental dynamic inertia force per reinforcement layer, must be added to T_{max} to determine the total reinforcement load for each layer during seismic loading.

T_{md} is calculated using equations 15-E-17 through 15-E-19 as follows:

A_s = PGA x F_{pga} = 0.50g (same is in previous example)

Assume a maximum lateral deflection of 2 inches is allowed/anticipated. Therefore,

$$k_h = 0.74A_s\left(\frac{A_s}{d}\right)^{0.25} = 0.74 \times 0.50g \times \left(\frac{0.50}{2}\right)^{0.25} = 0.262g$$

Including the weight of the facing blocks, using Equation 15-E-19,

$$P_i = k_h\left(\gamma_r \times A_{active} + \gamma_{facing} \times T_f \times H\right)$$

$$= 0.262 \times \left(0.130\ kcf \times 0.5 \times \left(20\ ft \times Tan\left(45 - \frac{34^o}{2}\right)\right) \times 20\ ft + 0.12\ kcf \times 1\ ft \times 20\ ft\right) = 4.24\frac{kips}{ft}$$

Using Equation 15-E-17,

$$T_{md} = \left(\frac{P_i}{n}\right) = \frac{4.24\frac{kips}{ft}}{10} = 0.424\frac{kips}{ft}$$

The total load per reinforcement layer, on a load per unit of wall width basis, during seismic shaking, T_{totalf}, is then calculated using superposition as follows, for Layer 6:

$$T_{totalf} = \gamma_{seis}(T_{max} + T_{md}) = 1.0\left(0.199\frac{kips}{ft} + 0.424\frac{kips}{ft}\right) = 0.623\frac{kips}{ft}$$

For seismic pullout design, T_{totalf} is used. However, for reinforcement rupture and connection rupture under seismic loading, the static and dynamic components of the reinforcement load must be handled separately. The reason for this is that the strength required to resist T_{max} must include the effects of creep because it is a sustained load, but the strength required to resist T_{md} should not include the effects of creep due to the transient nature of T_{md}.

15-E-6.7 Calculations for Reinforcement Rupture (Extreme Event I - Seismic)

Using equations 15-E-21, 15-E-22, and 15-E-23, calculate T_{ult} for static portion of load at Layer 6:

$$S_{rs} = \frac{\gamma_{seis} T_{max} RF}{\phi R_c} = \frac{1.0 \times 0.199 \frac{kips}{ft} \times 2.18}{1.0 \times 1.0} = 0.434 \frac{kips}{ft}$$

T_{ult} for dynamic portion of load at Layer 6:

$$S_{rt} = \frac{\gamma_{seis} T_{md} RF_{ID} RF_D}{\phi R_c} = \frac{1.0 \times 0.424 \frac{kips}{ft} \times 1.12 \times 1.3}{1.0 \times 1.0} = 0.617 \frac{kips}{ft}$$

$T_{ult} = S_{rs} + S_{rt} = 0.434$ kips/ft + 0.617 kips/ft = 1.05 kips/ft of reinforcement unit width

$T_{al} = 1.05$ kips/ft/2.18 = 0.483 kips/ft of reinforcement unit width

15-E-6.8 Calculations for Connection Rupture (Extreme Event I - Seismic)

Using equations 15-E-24, 15-E-25, and 15-E-26, T_{ult} for static portion of load at Layer 6 is determined as follows:

$$CR_{cr} = \frac{CR_u}{RF_{CR}} = \frac{0.75}{1.5} = 0.500$$

Since this is a mechanical connection, F_r is set equal to 1.0.

$$S_{rsc} = \frac{\gamma_{seis} T_0 RF_D}{F_r \phi CR_{cr} R_c} = \frac{1.0 \times 0.199 \frac{kips}{ft} \times 1.3}{1.0 \times 1.0 \times 0.500 \times 1.0} = 0.517 \frac{kips}{ft}$$

$$S_{rtc} = \frac{\gamma_{seis} T_{md} RF_D}{F_r \phi CR_u R_c} = \frac{1.0 \times 0.424 \frac{kips}{ft} \times 1.3}{1.0 \times 1.0 \times (0.75) \times 1.0} = 0.735 \frac{kips}{ft}$$

$T_{ult} = S_{rsc} + S_{rtc} = 0.517$ kips/ft + 0.735 kips/ft = 1.25 kips/ft of reinforcement product width

On a strength per reinforcement width basis, this minimum required geosynthetic T_{ult} of 1.25 kips/ft is still below the T_{ult} value of 2.47 kips/ft (i.e., a T_{al} = 2.47/2.18 = 1.13 kips/ft) estimated to provide the needed stiffness for the soil failure limit state. So the soil failure limit state is still controlling the tensile strength required considering the Extreme Event I Limit State (i.e., seismic).

15-E-6.9 Calculations for Pullout Limit State Design (Extreme Event I - Seismic)

Using Equation 15-E-27, L_e for Layer 10 (i.e., at the wall top) is determined as follows:

$$L_e = \frac{\gamma_{seis}(T_{max} + T_{md})}{\phi C(0.8\alpha F^*)\sigma_v R_c} = \frac{1.0(0.044 + 0.424)}{1.0 \times 2 \times (0.8 \times 0.8 \times 0.452) \times 0.173\ kcf \times 1.0}$$

$L_e = 4.68$ ft

$L_a = (H - z) \tan(45° - \phi_r/2) = (20\text{ ft} - 1.33\text{ ft}) \tan(45° - 34°/2) = 9.93$ ft

$L = L_a + L_e = 9.93\text{ ft} + 4.68\text{ ft} = 14.6$ ft

This required length is just barely greater than 70% of the wall height, so it does control pullout length at the wall top.

15-E-6.10 Calculations to Check to Make Sure Stiffness and Strength Required are Properly Matched (Extreme Event I, Seismic)

Since the soil failure limit state is still controlling the design, the stiffness determined to meet the soil failure limit state is still the correct stiffness to use. Therefore, an additional iteration with stiffness values that are consistent with the tensile strengths needed is not required. Had one of the other limit states controlled the T_{ult} needed, then it would have been necessary to recheck the design using an increased stiffness value that is consistent with the higher tensile strength. Fortunately, this does not happen very often (may only occur for block faced walls with very inefficient connections between the geosynthetic and the facing blocks).

15-E-6.11 Summary for Example 2 Design

See Table 15-E-10 for the calculation results for all of the layers for the Service I, Strength I, and Extreme Event I limit states. These calculation results are plotted and compared to design calculation results using the Simplified Method in figures 15-E-6 through 15-E-8.

In summary, for the final internal stability design for Example 2 using the Stiffness Method, the following would be specified with regard to reinforcement properties and spacing for the optimized design, and the following observations can be made:

- The vertical spacing of reinforcements is 2 ft throughout the wall height, and the coverage ratio is a minimum of 1.0.
- The minimum reinforcement length for internal stability (i.e., pullout) is 14 ft for the Strength Limit, and all layers except the top layer for seismic did not exceed this minimum length. The top layer length required is 14.6 ft for seismic for the Stiffness Method, which is greater than the 0.7H minimum (see Figure 15-E-8). The longer reinforcement length due to pullout is consistent with good detailing for MSE walls in AASHTO LRFD Article 11.10.7.4.

- The lowest strength PET geogrid available was greater in strength and stiffness than required by the Stiffness Method design for the top 4 layers (see figures 15-E-6 and 15-E-7). This was not the case for the Simplified Method, as higher reinforcement strengths than the minimum available were required for most of the layers.
- The Simplified Method required a total long-term tensile strength T_{al} of 13.2 kips/ft for the entire wall section, whereas the Stiffness Method required 5.4 kips/ft for the entire wall section for seismic reinforcement connection rupture. However, the T_{al} needed to obtain the stiffness needed to meet the soil failure limit state controlled the design, for which the total T_{al} for the wall section was 9.4 kips/ft, which is just over 70% of the total tensile strength needed by the Simplified Method. Note that in the upper third of the wall, all limit states for both methods will be limited to the minimum strength shown in the plots as a dashed vertical line. If that is considered, the Simplified Method T_{al} required would increase to 13.9 kips/ft, making the Stiffness Method required soil reinforcement strength equal to 68% of what is required by the Simplified Method.
- Overall, the required strength and stiffness of the reinforcement needed is in the low to mid-range of the geogrid product lines available. Note that the ground acceleration used for the seismic design represents what would be included in Seismic Zone 4, which is the highest seismic zone.

Table 15-E-10 Summary of Example 2 wall design calculations using Stiffness Method and R_c = 1.0 (Service, Strength, and Extreme Event I Limit States): (a) Calculation of T_{max}, (b) Service and Strength Limit State calculations, and (c) Extreme Event I (seismic) Limit State calculations.

a)	T_{max} Equation (Eq. 15-E-1) Parameters											Unfactored
Layer Number	z (ft)	S_v (ft)	R_cJ_i (kips/ft)	S_{global} (ksf)	S_{local} (ksf)	D_{tmax}	F_f	Φ_g	Φ_{local}	Φ_{fb}	Φ_{fs}	*+T_{max} and T_0 (kips/ft)
10 (top)	1.33	2.33	8.6	6.07	3.69	0.220	1.61	0.211	0.77	1.0	0.718	0.044
9	3.33	2.00	8.6	6.07	4.30	0.372	1.61	0.211	0.84	1.0	0.718	0.069
8	5.33	2.00	8.6	6.07	4.30	0.523	1.61	0.211	0.84	1.0	0.718	0.097
7	7.33	2.00	8.6	6.07	4.30	0.674	1.61	0.211	0.84	1.0	0.718	0.125
6	9.33	2.00	14.5	6.07	7.25	0.825	1.61	0.211	1.09	1.0	0.718	0.199
5	11.33	2.00	14.5	6.07	7.25	0.976	1.61	0.211	1.09	1.0	0.718	0.235
4	13.33	2.00	14.5	6.07	7.25	1.00	1.61	0.211	1.09	1.0	0.718	0.241
3	15.33	2.00	14.5	6.07	7.25	1.00	1.61	0.211	1.09	1.0	0.718	0.241
2	17.33	2.00	14.5	6.07	7.25	1.00	1.61	0.211	1.09	1.0	0.718	0.241
1	19.33	1.67	14.5	6.07	8.68	1.00	1.61	0.211	1.19	1.0	0.718	0.220
Base of wall	20											$\sum T_{max}$= 1.71

b)			Reinforcement Rupture (Strength Limit)		Connection Rupture (Strength Limit)			Soil Failure (Service Limit)		Pullout (Strength Limit)	
Layer Number	z (ft)	Reinforcement Product	#Minimum Required Strength per Unit Width of Reinforcement		Connection Capacity as Fraction of T_{lot}, CR_u	#Minimum Required Strength per Unit Width of Reinforcement		Factored ε_{rein} (%)	#T_{al} Corresponding to J_i (kips/ft)	Anchorage length L_e (ft)	
			T_{al} (kips/ft)	T_{ult} (kips/ft)		T_{al} (kips/ft)	T_{ult} (kips/ft)			Required	Min. allowed
10 (top)	1.33	Geogrid a	0.075	0.16	0.75	0.09	0.19	0.62	0.67	0.68	
9	3.33	Geogrid a	0.12	0.25	0.75	0.14	0.30	0.96	0.67	0.43	
8	5.33	Geogrid a	0.16	0.36	0.75	0.19	0.43	1.35	0.67	0.37	
7	7.33	Geogrid a	0.21	0.46	0.75	0.25	0.55	1.75	0.67	0.35	
6	9.33	Geogrid b	0.34	0.73	0.75	0.40	0.87	1.65	1.13	0.44	
5	11.33	Geogrid b	0.40	0.87	0.75	0.47	1.03	1.95	1.13	0.43	
4	13.33	Geogrid b	0.41	0.89	0.75	0.48	1.06	2.00	1.13	0.37	
3	15.33	Geogrid b	0.41	0.89	0.75	0.48	1.06	2.00	1.13	0.32	
2	17.33	Geogrid b	0.41	0.89	0.75	0.48	1.06	2.00	1.13	0.29	
1	19.33	Geogrid b	0.37	0.81	0.75	0.44	0.97	1.82	1.13	0.23	
Base of wall	20		$\sum T_{al}$= 2.89	$\sum T_{ult}$= 6.31		$\sum T_{al}$= 3.44	$\sum T_{ult}$= 7.52		$\sum T_{al}$= 9.4		

≤ 2.0% (OK)

< 3.0 (OK)

Table 15-E-10, continued

Summary of Example 2 wall design calculations using Stiffness Method and R_c = 1.0 (Service, Strength, and Extreme Event I Limit States): (c) Extreme Event I (seismic) Limit State calculations.

c)			Soil Failure (Service Limit, for Comparison)	Reinforcement Rupture (Extreme Event I Limit)		Connection Rupture (Extreme Event I Limit)			Pullout (Extreme Event I Limit)		
Layer Number	z (ft)	Reinforcement Product	#Tensile Strength T_{al} Corresponding to Reinforcement Stiffness Required (kips/ft)	#Minimum Required Strength per Unit Width of Reinforcement		Connection Capacity as Fraction of T_{lot}, CR_u	#Minimum Required Strength per Unit Width of Reinforcement		Anchorage length L_{eseis} (ft)		Total Reinforcement Length (ft)
				T_{al} (kips/ft)	$T_{ult} = T_{al} \times RF$ (kips/ft)		T_{al} (kips/ft)	T_{ult} (kips/ft)	Required	Min. allowed	(min. is 0.7H = 14 ft)
10 (top)	1.33	Geogrid a	0.67	0.33	0.71	0.75	0.39	0.85	4.68	< 3.0 (No, so pullout controls length at wall top)	14.6
9	3.33	Geogrid a	0.67	0.35	0.77	0.75	0.42	0.92	1.97		10.8
8	5.33	Geogrid a	0.67	0.38	0.83	0.75	0.45	0.99	1.30		9.1
7	7.33	Geogrid a	0.67	0.41	0.89	0.75	0.49	1.06	1.00		7.7
6	9.33	Geogrid b	1.13	0.48	1.05	0.75	0.57	1.25	0.89		6.6
5	11.33	Geogrid b	1.13	0.52	1.13	0.75	0.62	1.35	0.77		5.4
4	13.33	Geogrid b	1.13	0.52	1.14	0.75	0.62	1.36	0.66		4.2
3	15.33	Geogrid b	1.13	0.52	1.14	0.75	0.62	1.36	0.58		3.1
2	17.33	Geogrid b	1.13	0.52	1.14	0.75	0.62	1.36	0.51		1.9
1	19.33	Geogrid b	1.13	0.50	1.10	0.75	0.60	1.31	0.44		0.8
Base of wall	20		$\sum T_{al}$= 9.4	$\sum T_{al}$= 4.54	$\sum T_{ult}$= 9.92		$\sum T_{al}$= 5.41	$\sum T_{ult}$= 11.8			

+These values are on a load per unit of wall width basis in accordance with Article 11.10.6.4.1 of the AASHTO LRFD Bridge Design Manual (AASHTO 2020).

#For comparison to geogrid product MARV tensile strength that is not reduced by Rc (i.e., load per unit of reinforcement width basis).

*T_{md} for all reinforcement layers is 0.424 kips/ft.

Figure 15-E-6 Comparison of Stiffness Method internal stability design to the Simplified Method design, for Service and Strength limit states, block faced wall with mechanical connection, R_c = 1.0 (Example 2).

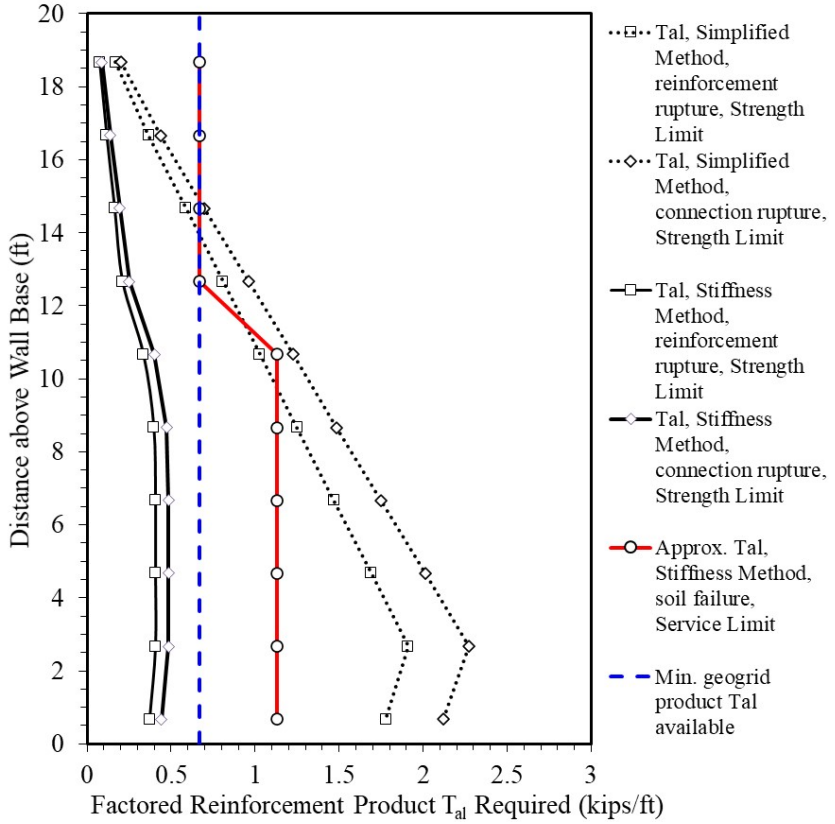

Figure 15-E-7 Comparison of Stiffness Method internal stability design to the Simplified Method design, for Service and Extreme Event I (seismic) limit states, block faced wall with mechanical connection, R_c = 1.0 (Example 2).

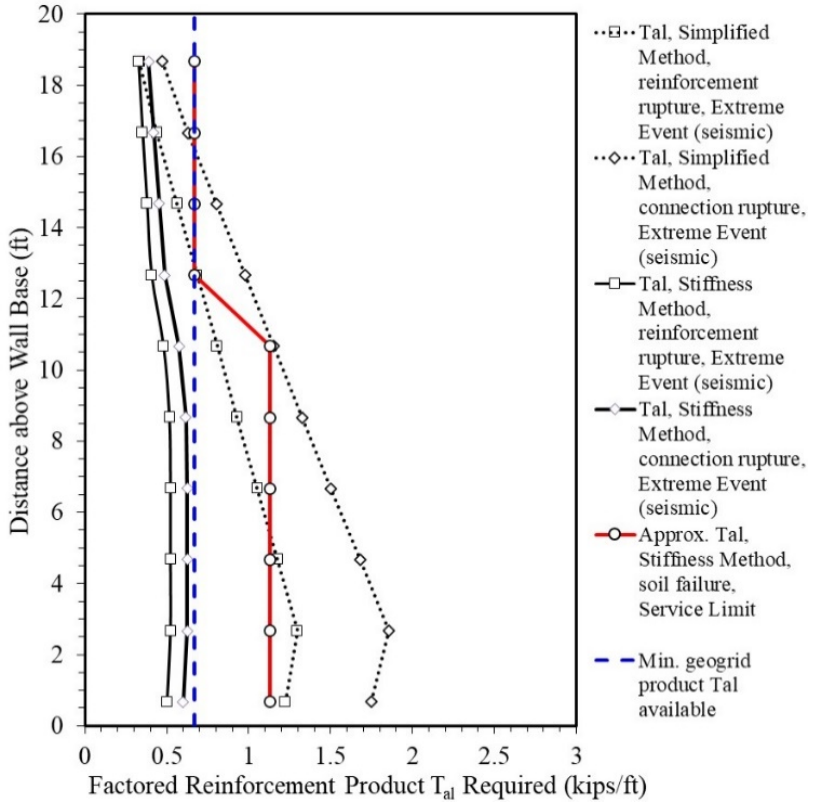

Figure 15-E-8 Comparison of Stiffness Method internal stability design to the Simplified Method design, for Extreme Event I (seismic) limit state, pullout, block faced wall with mechanical connection, R_c = 1.0 (Example 2).

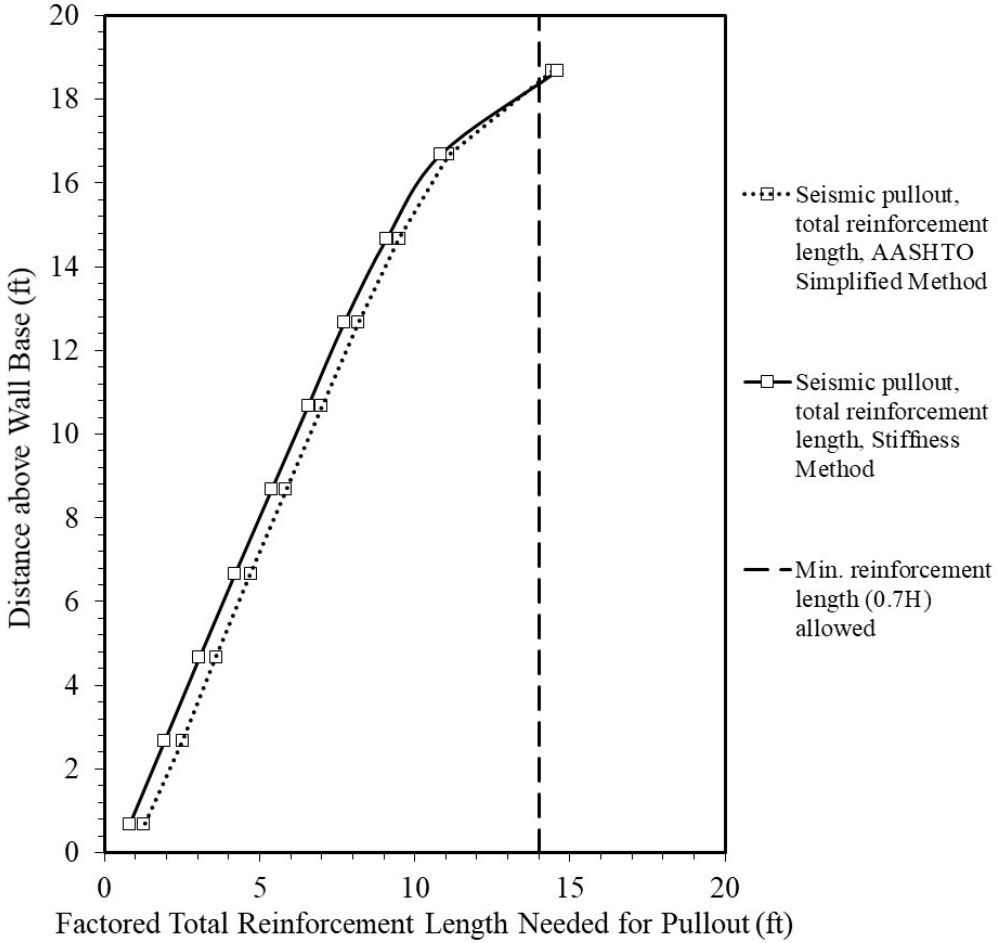

15-E-7 Stiffness Method Design Example 3: Block Faced Geosynthetic Wall with Mechanical Connections, R_c = 0.9

15-E-7.1 General

Figure 15-E-9 shows a cross-section of the wall for this design example. The procedures and results for the case when the coverage ratio R_c for the reinforcement is less than 1.0 (in this example R_c is set equal to 0.90) are illustrated. Material properties are provided in Table 15-E-7, except that the minimum geogrid stiffness available on a stiffness per unit of wall width basis is now reduced using R_c = 0.90 to $J_i R_c$ = 8.6 x 0.9 = 7.7 kips/ft. All other aspects of this example are the same as Example 2.

As is true of Example 2, the scope of Example 3 is limited to the service (soil failure limit only), strength, and Extreme Event I (seismic) limit states. Furthermore, for simplicity, live loads are not included in the calculations to follow. It is also assumed that the foundation soil has sufficient shear strength to prevent global instability, bearing capacity failure and excessive settlement. For seismic design, assume that the ground acceleration, A_s, is 0.50g.

Figure 15-E-9 Wall geometry and preliminary PET reinforcement layout for Design Example 3

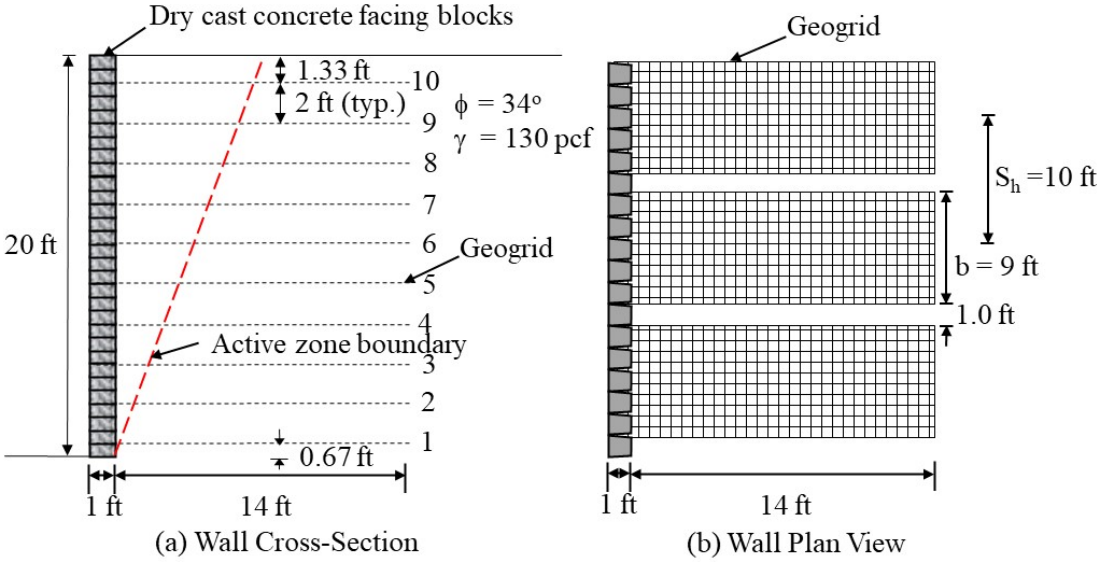

The wall geometry is based on Figure 15-E-9. As is true for Example 2, Example 3 calculations are demonstrated for one of the middle layers (i.e., Layer 6 in Figure 15-E-10, and for the soil failure and pullout limit states, Layer 10 is also used to illustrate calculations).

S = equivalent uniform height of surcharge = 0 ft

K_{avh} and K_{abh} remain unchanged relative to Example 1 and Example 2 at 0.283, and Φ_{fb} = 1.0.

The reinforcement stiffness values used in the calculations to follow need to be adjusted to account for the reinforcement coverage ratio, R_c of 0.90.

Since the soil failure limit state usually controls the amount of reinforcement required, this limit state is evaluated first, and T_{max} is calculated, for the wall design.

15-E-7.2 Calculations for Soil Failure Limit State Design (Service I)

As is true for Example 2, for Example 3 the factored reinforcement peak strain for each layer should be 2.0% or less for a modular block faced wall (i.e., stiff face) in this example. Some trial-and-error is typically required to establish what reinforcement stiffness values are required, starting with the stiffness values required to meet the soil failure limit, as the soil failure limit often controls the design of geosynthetic walls. Using trial-and-error, use the minimum 1,000-hour 2% strain secant stiffness available for geosynthetic reinforcement products, J_i = 7.7 kips/ft for the top 4 layers, and increase the stiffness of the bottom 6 layers to 14.5 kips/ft, as shown in Table 15-E-11.

Table 15-E-11 Creep stiffness values (i.e., at 2% strain and 1,000 h) for geogrids used in wall with R_c = 0.90.

Layer No.	Geogrid Designation	J_i (per Unit Width of Reinforcement, in kips/ft)	*R_c x J_i (per Unit Width of Wall, in kips/ft)
10	a	8.6	7.7
9	a	8.6	7.7
8	a	8.6	7.7
7	a	8.6	7.7
6	b	16.1	14.5
5	b	16.1	14.5
4	b	16.1	14.5
3	b	16.1	14.5
2	b	16.1	14.5
1	b	16.1	14.5

*This is the stiffness value, corrected for R_c, which is used to calculate T_{max}.

The contributing factors, coefficients and parameters that comprise the T_{max} equation can be found in Allen and Bathurst (2015) and Table 15-E-1. To calculate T_{max}, the reinforcement stiffness must be per unit of wall width rather than per unit of reinforcement product width; hence, R_cJ_i must be used to calculate T_{max} where the reinforcement stiffness value is required. Using the Table 15-E-11 stiffness values, considering a total of 10 layers, the parameters used to determine T_{max} are calculated as follows:

$$S_{\text{global}} = \frac{J_{\text{ave}}}{(\text{H/n})} = \frac{\sum_{i=1}^{n} R_cJ_i}{H} = (4 \times 0.9 \times 8.6 \text{ kips/ft} + 6 \times 0.9 \times 16.1 \text{ kips/ft})/20 \text{ ft} = 5.89 \text{ ksf}$$

$$\Phi_g = \alpha \left(\frac{S_{\text{global}}}{p_a}\right)^{\beta} = 0.16 \times (5.89 \text{ ksf}/2.11 \text{ ksf})^{0.26} = 0.209$$

S_{local} is calculated as:

$$S_{\text{local}} = \left(\frac{R_cJ}{S_v}\right)_i = (0.9 \times 16.1 \text{ kips/ft})/(2.0 \text{ ft}) = 7.25 \text{ ksf for Layer 6}$$

$$S_{localave} = \frac{\sum \left({}^{R_cJ}/_{S_v}\right)_i}{n} = \frac{3.30 + 3 \times 3.85 + 5 \times 7.25 + 8.68}{10} = 5.98\ ksf$$

where, n = 10 is the number of reinforcement layers. Therefore, Φ_{local} is recalculated as follows:

$$\Phi_{local} = \left(\frac{S_{local}}{S_{localave}}\right)^{0.5} = \left(\frac{7.25\ ksf}{5.98\ ksf}\right)^{0.5} = 1.10\ \ (Layer\ 6)$$

To determine the facing stiffness factor, the facing stiffness parameter, F_f does not change, and the facing stiffness factor is calculated as:

$$\Phi_{fs} = \eta \left(\left(\frac{S_{global}}{p_a}\right) F_f\right)^{\kappa} = 0.57 \times \left(\left(\frac{5.89\ ksf}{2.11\ ksf}\right) \times 1.61\right)^{0.15} = 0.714$$

Since c = 0, the cohesion factor, $\Phi_c = 1.0$.

D_{tmax} does not change relative to the previous calculation (i.e., D_{tmax} for Layer 6 is 0.825).

T_{max} for Layer 6 is now recalculated using the updated values as follows:

$$T_{max} = S_v \left[H\gamma_r D_{tmax} + \left(\frac{H_{ref}}{H}\right) S\gamma_f + LL\right] K_{avh} \Phi_{fb} \Phi_g \Phi_{fs} \Phi_{local} \Phi_c$$

$$T_{max} = 2.0\ ft \left[20ft \times 0.130\ kcf \times 0.825 + \left(\frac{20\ ft}{20\ ft}\right) 0\ ft \times 0.130\ kcf + 0\right] 0.283 \times 1.0 \times 0.209 \times 0.714 \times 1.10 \times 1.0$$

T_{max} = 0.199 kips/ft of wall width

T_{max}, and the calculated parameters needed to calculate T_{max}, are summarized in Table 15-E-12 for the rest of the layers for the Service and Strength limit states.

Using Equation 15-14 with load factor γ_{sf} = 1.2, and resistance factor ϕ_{sf} = 1.0 (Table 15-5), the factored reinforcement strain corresponding to Layer 10 is computed as:

$$\varepsilon_{rein} = \frac{\gamma_{p-EVsf} T_{max}}{\phi_{sf} R_c J_i} = \frac{1.2 \times 0.042 \frac{kips}{ft}}{1.0 \times 0.9 \times 8.6 \frac{kips}{ft}} \times 100\% = 0.65\% \leq 2\% \quad OK$$

For Layer 6:

$$\varepsilon_{rein} = \frac{\gamma_{p-EVsf} T_{max}}{\phi_{sf} R_c J_i} = \frac{1.2 \times 0.199 \frac{kips}{ft}}{1.0 \times 0.9 \times 16.1 \frac{kips}{ft}} \times 100\% = 1.65\% \leq 2\% \quad OK$$

See Table 15-E-12 for the calculation results for the rest of the layers. As shown in the table, the soil failure limit state is met by all the reinforcement layers.

As shown for examples 1 and 2, the equivalent ultimate tensile strength that corresponds to the stiffness values needed to meet the soil failure limit state is equal to approximately $0.17J_i$. For the two stiffness values required to meet the soil failure limit state, the approximate ultimate tensile strength per ft of wall width needed is:

T_{ult} = $0.17J_i$ = 0.17 x (8.6 kips/ft) = 1.46 kips/ft (applicable to Layer 10)

T_{ult} = 0.17 x (16.1 kips/ft) = 2.74 kips/ft (applicable to Layer 6)

To determine T_{al}, divide T_{ult} by RF = 1.12 x 1.5 x 1.3 = 2.18. Therefore, the approximate long-term tensile strengths implied by the stiffness required for the soil failure limit state for the reinforcement product (i.e., per ft of wall width) are:

T_{al} = (1.46 kips/ft)/2.18 = 0.67 kips/ft (applicable to Layer 10)

T_{al} = (2.74 kips/ft)/2.18 = 1.26 kips/ft (applicable to Layer 6)

15-E-7.3 Calculations for Reinforcement Rupture Limit State (Strength I)

Since no live load is present, the required long-term reinforcement strength (T_{al}) for Layer 6 is computed using Equation 15-E-5.

The minimum required value of T_{al} and T_{ult} for Layer 6, on a strength per unit of reinforcement width basis (i.e., this value is what would be compared to the MARV of the tensile strength of specific reinforcement products), is therefore:

$$T_{al} \geq \frac{\gamma_{p-EV} T_{max}}{\phi_{rr} R_c} = \frac{1.35 \times 0.199 \frac{kips}{ft}}{0.80 \times 0.90} = 0.373 \frac{kips}{ft}$$

$$T_{ult} = T_{al} RF_{ID} RF_{CR} RF_D = 0.373 \times 1.12 \times 1.5 \times 1.3 = 0.815 \frac{kips}{ft}$$

For Layer 6, T_{al} for reinforcement rupture is significantly less than T_{al} needed to achieve the stiffness required for the soil failure limit state (i.e., 0.373 kips/ft << 1.26 kips/ft).

15-E-7.4 Calculations for Connection Strength Design (Strength I)

With regard to connection strength, the same value as was used in Example 2 is used for Example 3 (i.e., a mechanical type connection between the facing blocks and geogrid with a CR_u of 0.75). For the connection design, it is assumed that $\gamma_{p\text{-}EVc} = \gamma_{p\text{-}EV} = 1.35$, $\phi_{cr} = \phi_{rr} = 0.80$, and $T_o = T_{max}$. It will also be assumed that this value of CR_u is applicable for all geogrids.

Therefore, using the load side of the connection limit state design Equation 15-E-9, at Layer 6, the factored connection load is calculated as follows:

$$T_{ac}(required) = (\gamma_{p-EVc})T_0 = (1.35) \times 0.199\frac{kips}{ft} = 0.269\frac{kips}{ft} \text{ of wall width}$$

To determine the long-term connection strength available, since a mechanical connection is used in this example, the connection strength will not be a function of the normal load on the facing blocks, N. Using the resistance side of Equation 15-E-9 (i.e., the limit state equation for connection design), and the equation for T_{ac} (Equation 15-E-11), the available long-term connection strength available is calculated as follows, assuming that the minimum T_{ult} needed is equal to the T_{ult} needed (strength per unit of wall width) to obtain the stiffness required to meet the soil failure limit state:

$$T_{ac}(available) = \phi_{cr}T_{ac}R_c = \frac{\phi_{cr} \times T_{ult} \times \left(\frac{CR_u}{RF_{CR}}\right)R_c}{RF_D} \qquad (15\text{-E-}33)$$

$$T_{ac}(available) = \frac{0.80 \times 2.47 kips/ft \times \left(\frac{0.75}{1.5}\right)0.9}{1.3} = 0.684 \text{ kips/ft}$$

$0.269 \text{ kips/ft} < 0.684 \text{ kips/ft?}$ OK

Combining Equation 15-E-9 with Equation 15-E-33 and solving for T_{ult}, at layer 6, can determine the minimum T_{ult} required to just satisfy connection strength requirements as follows:

$$T_{ult}(min.required) = \left(\frac{\gamma_{p-EVc}}{\phi_{cr}R_c}\right)T_0 RF_D RF_{CR}\left(\frac{1}{CR_u}\right)$$

$$T_{ult}(min.required) = \left(\frac{1.35}{0.8 \times 0.90}\right) \times 0.199 \times 1.3 \times 1.5\left(\frac{1}{0.75}\right) = 0.970\frac{kips}{ft}$$

The only difference between examples 2 and 3 regarding the connection strength and the T_{ult} needed to meet connection strength requirements is R_c (i.e., 0.873/0.970 = 0.90). These calculations demonstrate that R_c has been handled correctly.

On a strength per unit of reinforcement width basis, this minimum required geosynthetic T_{ult} of 0.970 kips/ft is below the T_{ult} value of 2.74 kips/ft (i.e., a T_{al} = 2.74/2.18 = 1.26 kips/ft) estimated to provide the needed stiffness for the soil failure limit state. So the soil failure limit state is still controlling the tensile strength required at this point (i.e., only considering the Service and Strength Limit States).

15-E-7.5 Calculations for Pullout Limit State Design (Strength I)

The default pullout parameters α and F* specified in AASHTO (2020) are used for this example design and are the same as in Example 1 (α = 0.8 and F* = 0.452). R_c in this example is smaller than in the previous two examples (Rc = 0.90). The vertical stress, σ_v, over the reinforcement anchorage length, conservatively calculated using Equation 15-E-29, is the same as in Example 1 (0.173 ksf). Since pullout is usually most critical near the wall top, this example pullout calculation is carried out for Layer 10.

Using Equation 15-E-30, the required factored length of reinforcement in the resistant zone (i.e., behind the active wedge) for Layer 10 is:

$$L_e = \frac{\gamma_{p-EV} T_{max}}{\phi_{po} C(\alpha F^*)\sigma_v R_c}$$

$$L_e = \frac{1.35 \times 0.042 \frac{kips}{ft}}{0.70 \times 2(0.8 \times 0.452)(0.173\ ksf)0.90} = 0.719\ ft$$

To determine the total reinforcement length needed, L, the length of reinforcement within the active zone, L_a, must be calculated. For geosynthetic walls, the active zone is assumed to be bounded by the Rankine active zone (wedge). L_a is calculated as follows for a vertical wall (at Layer 10):

$$L_a = (H - z) \tan(45° - \phi_r/2) = (20\text{ ft} - 1.33\text{ ft}) \tan(45° - 34°/2) = 9.93\text{ ft}$$

The minimum length allowed for L_e is 3 ft (AASHTO 2020), which is greater than the calculated L_e required for pullout for layer 10. Therefore, using L_e = 3 ft, the total reinforcement length required for layer 10 is:

$$L = L_a + L_e = 9.93\text{ ft} + 3\text{ ft} = 12.9\text{ ft}$$

Pullout calculation results for the other layers are summarized in Table 15-E-12.

It should be recalled that the minimum length of reinforcement for typical reinforced soil walls is 0.7H = 0.7×(20 ft) = 14 ft. Therefore, pullout does not control the reinforcement length required. Note that other limit state design calculations can result in greater reinforcement length, such as external stability (e.g., sliding) or global stability.

15-E-7.6 Calculations for Determination of T_{max} + T_{md} (Extreme Event I - Seismic)

T_{md} is calculated as shown for Example 2, Layer 6, and is equal to 0.424 kips/ft. T_{totalf} is also the same as shown for Example 2 and is equal to 0.623 kips/ft of wall width.

15-E-7.7 Calculations for Reinforcement Rupture (Extreme Event I - Seismic)

Using equations 15-E-21, 15-E-22, and 15-E-23, calculate T_{ult} for static portion of load at Layer 6:

$$S_{rs} = \frac{\gamma_{seis} T_{max} RF}{\phi R_c} = \frac{1.0 \times 0.199 \frac{kips}{ft} \times 2.18}{1.0 \times 0.90} = 0.482 \frac{kips}{ft}$$

T_{ult} for dynamic portion of load at Layer 6:

$$S_{rt} = \frac{\gamma_{seis} T_{md} RF_{ID} RF_D}{\phi R_c} = \frac{1.0 \times 0.424 \frac{kips}{ft} \times 1.12 \times 1.3}{1.0 \times 0.90} = 0.686 \frac{kips}{ft}$$

$T_{ult} = S_{rs} + S_{rt} = 0.482$ kips/ft + 0.686 kips/ft = 1.17 kips/ft of reinforcement width

$T_{al} = 1.17$ kips/ft/2.18 = 0.537 kips/ft of reinforcement width

The only difference between these calculated values and those calculated for Example 2 is the coverage ratio of 0.90 (i.e., for T_{al}, 0.434/0.537 = 0.90).

15-E-7.8 Calculations for Connection Rupture (Extreme Event I - Seismic)

Using equations 15-E-24, 15-E-25, and 15-E-26, T_{ult} for static portion of load at Layer 6:

$$CR_{cr} = \frac{CR_u}{RF_{CR}} = \frac{0.75 \frac{kips}{ft}}{1.5 \frac{Kips}{ft}} = 0.500$$

Since this is a mechanical connection, F_r is set equal to 1.0.

$$S_{rsc} = \frac{\gamma_{seis} T_0 RF_D}{F_r \phi CR_{cr} R_c} = \frac{1.0 \times 0.199 \frac{kips}{ft} \times 1.3}{1.0 \times 1.0 \times 0.500 \times 0.90} = 0.575 \frac{kips}{ft}$$

$$S_{rtc} = \frac{\gamma_{seis} T_{md} RF_D}{F_r \phi CR_u R_c} = \frac{1.0 \times 0.424 \frac{kips}{ft} \times 1.3}{1.0 \times 1.0 \times (0.75) \times 0.90} = 0.817 \frac{kips}{ft}$$

$T_{ult} = S_{rsc} + S_{rtc} = 0.575$ kips/ft+0.817 kips/ft = 1.39 kips/ft of reinforcement product width.

On a strength per unit of reinforcement width basis, this minimum required geosynthetic T_{ult} of 1.39 kips/ft is still below the T_{ult} value of 2.74 kips/ft (i.e., a T_{al} = 2.74/2.18 = 1.26 kips/ft) estimated to provide the needed stiffness for the soil failure limit state. So the soil failure limit state is still controlling the tensile strength required considering the Extreme Event I Limit State (i.e., seismic).

Again, the only difference between these calculated results and those determined for Example 2 is the coverage ratio of 0.90.

15-E-7.9 Calculations for Pullout Limit State Design (Extreme Event I - Seismic)

Using Equation 15-E-27, L_e for Layer 10 (i.e., at the wall top) is determined as follows:

$\sigma_v = z\gamma_r + S_{sur}\gamma_f$

$\sigma_v = (1.33\text{ ft})(0.13\text{ kcf}) + (0)(0.13\text{ kcf}) = 0.173\text{ ksf}$

$$L_e = \frac{\gamma_{seis}(T_{max} + T_{md})}{\phi C(0.8\alpha F^*)\sigma_v R_c} = \frac{1.0(0.042 + 0.424)}{1.0 \times 2 \times (0.8 \times 0.8 \times 0.452) \times 0.173\ kcf \times 0.90}$$

$L_e = 5.18\text{ ft}$

$L_a = (H - z)\tan(45° - \phi_r/2) = (20\text{ ft} - 1.33\text{ ft})\tan(45° - 34°/2) = 9.93\text{ ft}$

$L = L_a + L_e = 9.93\text{ ft} + 5.18\text{ ft} = 15.1\text{ ft}$

This required length is greater than 70% of the wall height, so it does control pullout length at the wall top.

15-E-7.10 Calculations to Check to Make Sure Stiffness and Strength Required are Properly Matched (Extreme Event I, Seismic)

Since the soil failure limit state is still controlling the design, the stiffness determined to meet the soil failure limit state is still the correct stiffness to use. Therefore, an additional iteration with higher stiffness values that are consistent with the tensile strengths needed is not required. Had one of the other limit states controlled the T_{ult} needed, then it would have been necessary to recheck the design using a stiffness value that is consistent with the higher tensile strength. Fortunately, this does not happen very often (only would occur for block faced walls with very inefficient connections between the geosynthetic and the facing blocks).

15-E-7.11 Summary for Example 3 Design

See Table 15-E-12 for the calculation results for all of the layers for the Service I, Strength I, and Extreme Event I limit states. These calculation results are plotted and compared to design calculation results using the Simplified Method in figures 15-E-10 through 15-E-12.

In summary, for the final internal stability design for Example 3 using the Stiffness Method, the following would be specified with regard to reinforcement properties and spacing for the optimized design, and the following observations can be made:

- The vertical spacing of reinforcements is 2 ft throughout the wall height, and the coverage ratio is a minimum of 0.90.
- The minimum reinforcement length for internal stability (i.e., pullout) is 14 ft for the Strength Limit, and all layers except the top layer for seismic did not exceed this minimum length. The top layer length required is 15.1 ft for seismic for the Stiffness Method, which is greater than the 0.7H minimum. The longer reinforcement length due to pullout is consistent with good detailing for MSE walls in AASHTO (2020) LRFD Article 11.10.7.4.

- The lowest strength PET geogrid available was greater in strength and stiffness than required by the Stiffness Method design for the top 4 layers (see figures 15-E-11 and 15-E-12). This was not the case for the Simplified Method, as higher reinforcement strengths than the minimum available were required for most of the layers.
- The Simplified Method required a total long-term tensile strength T_{al} of 13.5 kips/ft for the entire wall section (seismic connection rupture controlled the design), whereas the Stiffness Method required only 5.99 kips/ft for the entire wall section for seismic reinforcement connection rupture. However, the T_{al} needed to obtain the stiffness needed to meet the soil failure limit state controlled the design, for which the total T_{al} for the wall section was 10.2 kips/ft, which is just over 75% of the total tensile strength needed by the Simplified Method. Note that in the upper third of the wall, all limit states for both methods will be limited to the minimum strength shown in the plots as a dashed vertical line. If that is considered, the Simplified Method T_{al} required would increase to 13.7 kips/ft, making the Stiffness Method required soil reinforcement strength equal to 74% of what is required by the Simplified Method.
- Overall, the required strength and stiffness of the reinforcement needed is in the low to mid-range of the geogrid product lines available. Note that the ground acceleration used for the seismic design represents what would be included in Seismic Zone 4, which is the highest seismic zone.

Table 15-E-12 Summary of Example 3 wall design calculations using Stiffness Method and R_c = 0.90 (Service, Strength, and Extreme Event I Limit States): (a) Calculation of T_{max}, (b) Service and Strength Limit State calculations, and (c) Extreme Event I (seismic) Limit State calculations.

a)	T_{max} Equation (Eq. 15-E-1) Parameters											Unfactored
Layer Number	z (ft)	S_v (ft)	R_cJ_i (kips/ft)	S_{global} (ksf)	S_{local} (ksf)	D_{tmax}	F_f	Φ_g	Φ_{local}	Φ_{fb}	Φ_{fs}	$^{+}T_{max}$ and T_0 (kips/ft)
10 (top)	1.33	2.33	7.7	5.89	3.30	0.220	1.61	0.209	0.74	1.0	0.714	0.042
9	3.33	2.00	7.7	5.89	3.85	0.372	1.61	0.209	0.80	1.0	0.714	0.065
8	5.33	2.00	7.7	5.89	3.85	0.523	1.61	0.209	0.80	1.0	0.714	0.092
7	7.33	2.00	7.7	5.89	3.85	0.674	1.61	0.209	0.80	1.0	0.714	0.119
6	9.33	2.00	14.5	5.89	7.25	0.825	1.61	0.209	1.10	1.0	0.714	0.199
5	11.33	2.00	14.5	5.89	7.25	0.976	1.61	0.209	1.10	1.0	0.714	0.236
4	13.33	2.00	14.5	5.89	7.25	1.00	1.61	0.209	1.10	1.0	0.714	0.242
3	15.33	2.00	14.5	5.89	7.25	1.00	1.61	0.209	1.10	1.0	0.714	0.242
2	17.33	2.00	14.5	5.89	7.25	1.00	1.61	0.209	1.10	1.0	0.714	0.242
1	19.33	1.67	14.5	5.89	8.68	1.00	1.61	0.209	1.21	1.0	0.714	0.221
Base of wall	20											$\sum T_{max}$= 1.70

b)			Reinforcement Rupture (Strength Limit)		Connection Rupture (Strength Limit)			Soil Failure (Service Limit)		Pullout (Strength Limit)	
Layer Number	z (ft)	Reinforcement Product	#Minimum Required Strength per Unit Width of Reinforcement		Connection Capacity as Fraction of T_{lot}, CR_u	#Minimum Required Strength per Unit Width of Reinforcement		Factored ε_{rein} (%)	#T_{al} Corresponding to J_i (kips/ft)	Anchorage length L_e (ft)	
			T_{al} (kips/ft)	T_{ult} (kips/ft)		T_{al} (kips/ft)	T_{ult} (kips/ft)			Required	Min. allowed
10 (top)	1.33	Geogrid a	0.079	0.17	0.75	0.09	0.20	0.65	0.67	0.72	
9	3.33	Geogrid a	0.12	0.27	0.75	0.15	0.32	1.02	0.67	0.45	
8	5.33	Geogrid a	0.17	0.38	0.75	0.21	0.45	1.43	0.67	0.39	
7	7.33	Geogrid a	0.22	0.49	0.75	0.26	0.58	1.85	0.67	0.37	
6	9.33	Geogrid b	0.37	0.82	0.75	0.44	0.97	1.65	1.26	0.49	< 3.0
5	11.33	Geogrid b	0.44	0.97	0.75	0.53	1.15	1.95	1.26	0.47	(OK)
4	13.33	Geogrid b	0.45	0.99	0.75	0.54	1.18	2.00	1.26	0.41	
3	15.33	Geogrid b	0.45	0.99	0.75	0.54	1.18	2.00	1.26	0.36	
2	17.33	Geogrid b	0.45	0.99	0.75	0.54	1.18	2.00	1.26	0.32	
1	19.33	Geogrid b	0.41	0.90	0.75	0.49	1.08	1.83	1.26	0.26	
Base of wall	20		$\sum T_{al}$= 3.18	$\sum T_{ult}$= 6.96		$\sum T_{al}$= 3.79	$\sum T_{ult}$= 8.28		$\sum T_{al}$= 10.2		

≤ 2.0% (OK)

Table 15-E-12, continued

Summary of Example 3 wall design calculations using Stiffness Method and R_c = 0.90 (Service, Strength, and Extreme Event I Limit States): (c) Extreme Event I (seismic) Limit State calculations.

c)			Soil Failure (Service Limit, for Comparison)	Reinforcement Rupture (Extreme Event I Limit)		Connection Rupture (Extreme Event I Limit)			Pullout (Extreme Event I Limit)		
Layer Number	z (ft)	Reinforcement Product	#Tensile Strength T_{al} Corresponding to Reinforcement Stiffness Required (kips/ft)	#Minimum Required Strength per Unit Width of Reinforcement		Capacity as Fraction of T_{lot}, CR_u	#Minimum Required Strength per Unit Width of Reinforcement		Anchorage length L_{eseis} (ft)		Total Reinforcement Length (ft)
				T_{al} (kips/ft)	T_{ult} (kips/ft)		T_{al} (kips/ft)	T_{ult} (kips/ft)	Required	Min. allowed	(min. is 0.7H = 14 ft)
10 (top)	1.33	Geogrid a	0.67	0.36	0.79	0.75	0.43	0.94	5.18	< 3.0 (No, so pullout controls length at wall top)	15.1
9	3.33	Geogrid a	0.67	0.39	0.85	0.75	0.46	1.01	2.17		11.0
8	5.33	Geogrid a	0.67	0.42	0.91	0.75	0.50	1.08	1.43		9.2
7	7.33	Geogrid a	0.67	0.45	0.97	0.75	0.53	1.16	1.09		7.8
6	9.33	Geogrid b	1.25	0.54	1.17	0.75	0.64	1.39	0.99		6.7
5	11.33	Geogrid b	1.25	0.58	1.26	0.75	0.69	1.50	0.86		5.5
4	13.33	Geogrid b	1.25	0.58	1.27	0.75	0.69	1.52	0.74		4.3
3	15.33	Geogrid b	1.25	0.58	1.27	0.75	0.69	1.52	0.64		3.1
2	17.33	Geogrid b	1.25	0.58	1.27	0.75	0.69	1.52	0.57		2.0
1	19.33	Geogrid b	1.25	0.56	1.22	0.75	0.67	1.46	0.49		0.8
Base of wall	20		$\sum T_{al}$= 10.2	$\sum T_{al}$= 5.03	$\sum T_{ult}$= 11.0		$\sum T_{al}$= 5.99	$\sum T_{ult}$= 13.1			

+These values are on a load per unit of wall width basis in accordance with Article 11.10.6.4.1 of the AASHTO LRFD Bridge Design Manual (AASHTO 2020).

#For comparison to geogrid product MARV tensile strength that is not reduced by R_c (i.e., load per unit of reinforcement width basis).

*T_{md} for all reinforcement layers is 0.424 kips/ft.

Figure 15-E-10 Comparison of Stiffness Method internal stability design to the Simplified Method design, for Service and Strength limit states, block faced wall with mechanical connection, R_c = 0.90 (Example 3).

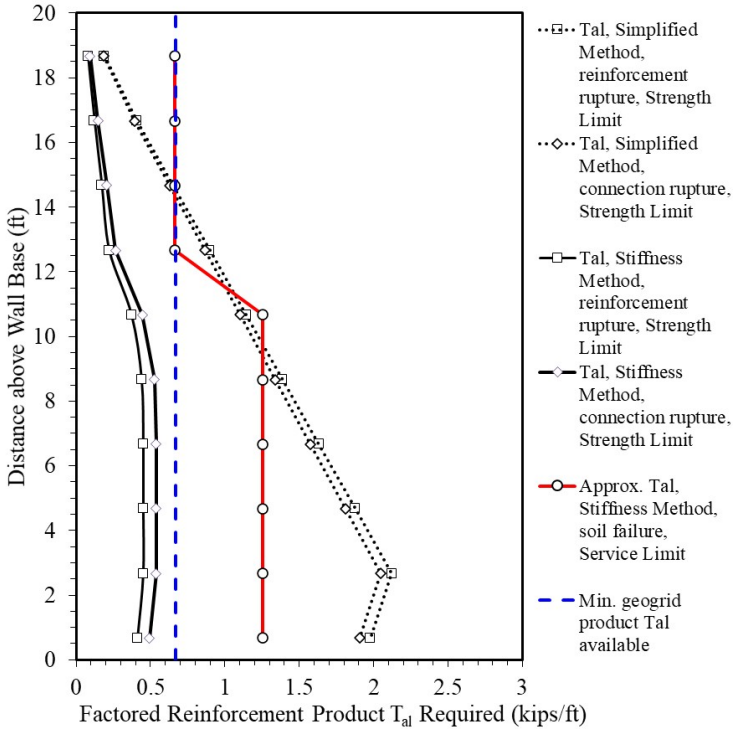

Figure 15-E-11 Comparison of Stiffness Method internal stability design to the Simplified Method design, for Service and Extreme Event I (seismic) limit states, block faced wall with mechanical connection, R_c = 0.90 (Example 3).

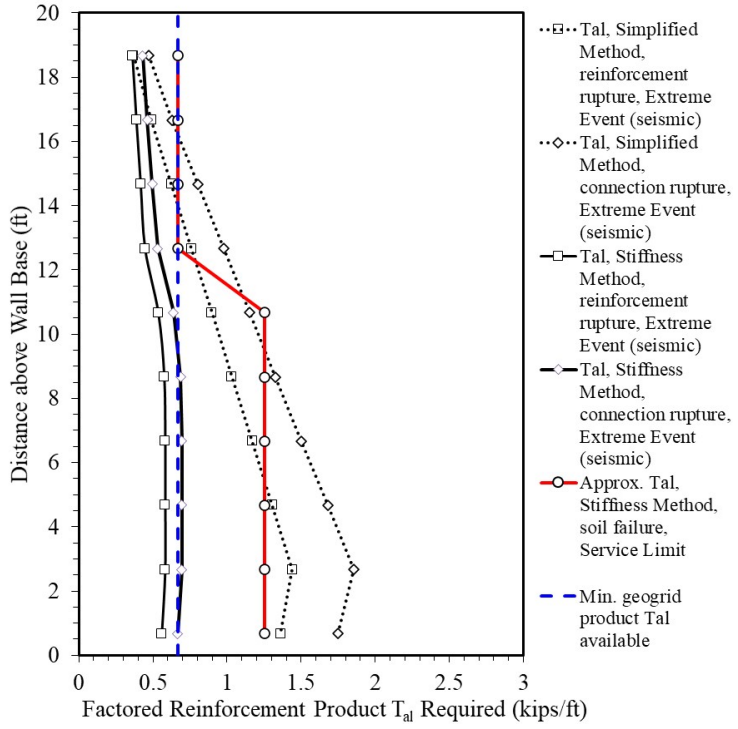

Figure 15-E-12 Comparison of Stiffness Method internal stability design to the Simplified Method design, for Extreme Event I (seismic) limit state, pullout, block faced wall with mechanical connection, R_c = 0.90 (Example 3).

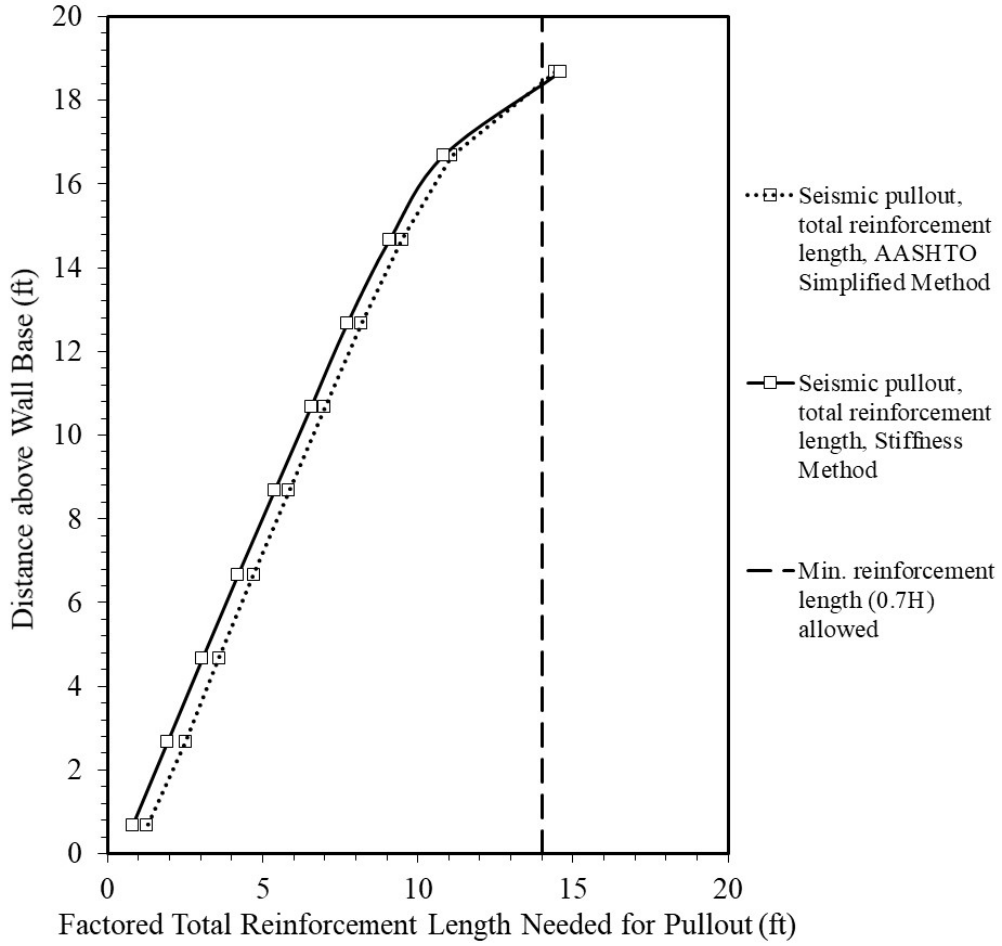

15-E-8 Stiffness Method Design Example 4: Block Faced Geosynthetic Wall System with Frictional Facing Connection

15-E-8.1 General

Figure 15-E-9 shows a cross-section of the wall for this design example. Material properties are provided in Table 15-E-7, except that the minimum geogrid stiffness available on a stiffness per unit of wall width basis is reduced using R_c = 0.90 (i.e., same as Example 3). All other aspects of this example are the same as Example 2. Assume for this example that polyester (PET) geogrid will be used for the soil reinforcement, and dry cast facing blocks with a frictional connection between the geogrid and facing blocks are used. Because of the need to assess connection strength, and because connection strength is geosynthetic and facing block specific (i.e., wall system specific), example system specific ultimate connection strength data ($T_{ultconn}$), and properties for the geosynthetic used with the wall system, are provided in Figure 15-E-13 and Table 15-E-13. The wall backfill is assumed to be a well-graded gravelly sand, with no cohesion.

Figure 15-E-13 Block-geogrid connection test results for Design Example 4, in units of peak tensile capacity (i.e., $T_{ultconn}$) per unit of reinforcement width.

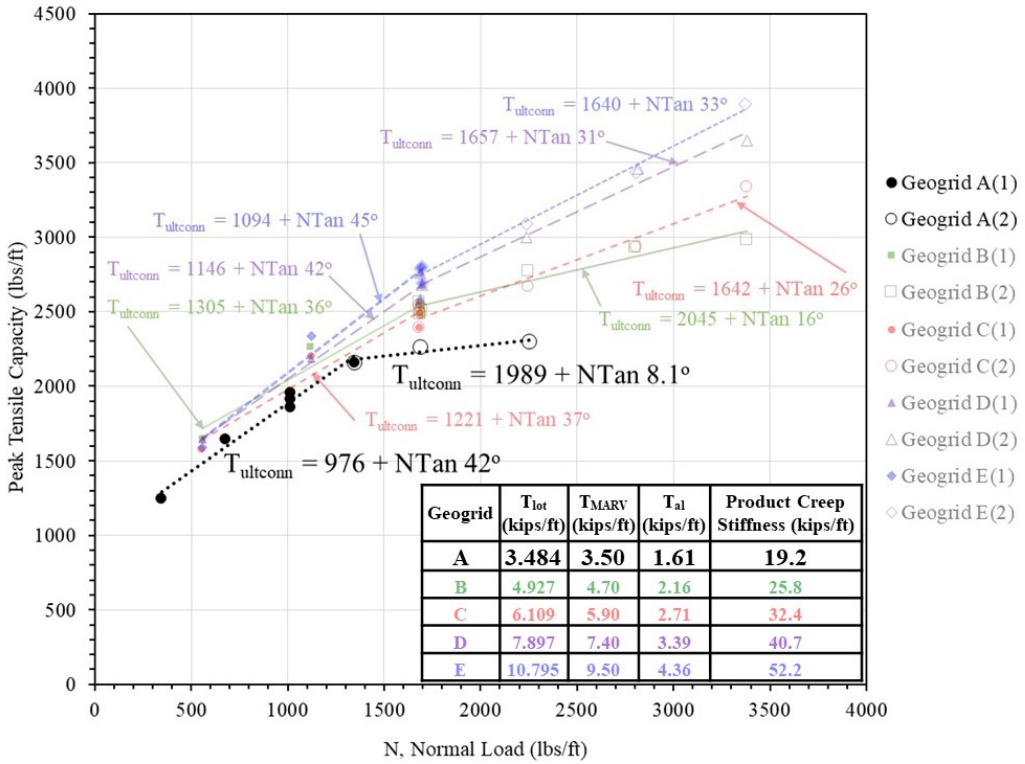

Geogrid	T_{lot} (kips/ft)	T_{MARV} (kips/ft)	T_{al} (kips/ft)	Product Creep Stiffness (kips/ft)
A	3.484	3.50	1.61	19.2
B	4.927	4.70	2.16	25.8
C	6.109	5.90	2.71	32.4
D	7.897	7.40	3.39	40.7
E	10.795	9.50	4.36	52.2

Table 15-E-13 Connection strength equations for example wall system.

Geogrid Product	Approx. Wall Height, H (ft)	Normal Load, N (lbs/ft)	$T_{ultconn}$ (lbs/ft)	T_{lot} (lbs/ft)
Geogrid A	H < 9	N < 1344	976 + N tan 42°	3484
	H < 20	1344 < N < 2268	1989 + N tan 8.1°	
	H > 20	N > 2268	2416	
Geogrid B	H < 16	N < 1724	1305 + N tan 36°	4927
	H < 30	1724 < N < 3424	2045 + N tan 16°	
	H > 30	N > 3424	3030	
Geogrid C	H < 16	N < 1681	1221 + N tan 37°	6109
	H < 30	1681 < N < 3479	1642 + N tan 26°	
	H > 30	N > 3479	3339	
Geogrid D	H < 16	N < 1695	1146 + N tan 42°	7897
	H < 30	1695 < N < 3380	1657 + N tan 31°	
	H > 30	N > 3380	3688	
Geogrid E	H < 16	N < 1695	1094 + N tan 45°	10795
	H > 16	1695 < N < 3373	1640 + N tan 33°	
	H > 30	3373	3830	

Data for geogrids B through E are faded in the figure and table since, as will be shown later, for the Stiffness Method, only the weakest geogrid will be needed. However, for the comparison to the Simplified Method provided at the end of this example, the other geogrids will be needed. Showing the other geogrids is also useful to demonstrate how the Geogrid A connection strength plot compares with the stronger geogrids. The pattern shown in Figure 15-E-13 is typical of modular block wall system connection strength data in which the connections are mostly frictional. Only when the normal stress between blocks gets high enough do significant connection strength differences between geogrids with a range of tensile strengths occur, transitioning from mostly friction controlled to reinforcement rupture controlled. Because of this, at facing block normal loads that are relatively low, increasing the geogrid tensile strength may not help much, and the only choice may be to reduce the reinforcement spacing. As is shown later, this will not be an issue for the Stiffness Method, but this will be an issue for the Simplified Method. Another approach to address this problem is to conduct 1,000 hour connection creep tests, as for frictional systems, it is likely that a lower reduction factor for creep, RF_{CR}, could be used instead of the RF_{CR} determined for the geogrid in-isolation (in this case, RF_{CR} for the geogrid is 1.5, but for the connection, a RF_{CR} of only 1.2 or lower could be used, as shown in Figure 15-E-14). However, for this example, to keep the example as simple as possible, the RF_{CR} for the geogrid of 1.5 is used (i.e., the data in Figure 15-E-5 is not used in this example, but is for information only).

As is true of examples 2 and 3, the scope of this design example is limited to the service (soil failure limit only), strength, and Extreme Event I (seismic) limit states. Furthermore, for simplicity, live loads are not included in the calculations to follow. It is also assumed that the foundation soil has sufficient shear strength to prevent global instability, bearing capacity failure and excessive settlement. For seismic design, assume that the ground acceleration, A_s, is 0.50g.

The wall geometry is based on Figure 15-E-9 (i.e., same as for Example 3). As is true for examples 2 and 3, Example 4 calculations are demonstrated for one of the middle layers (i.e., Layer 6 in Figure 15-E-10, and for the soil failure and pullout limit states, Layer 10 is also used to illustrate calculations).

Figure 15-E-14 Example block-geogrid creep connection test results for a wall system, in units of peak tensile capacity per unit of reinforcement width.

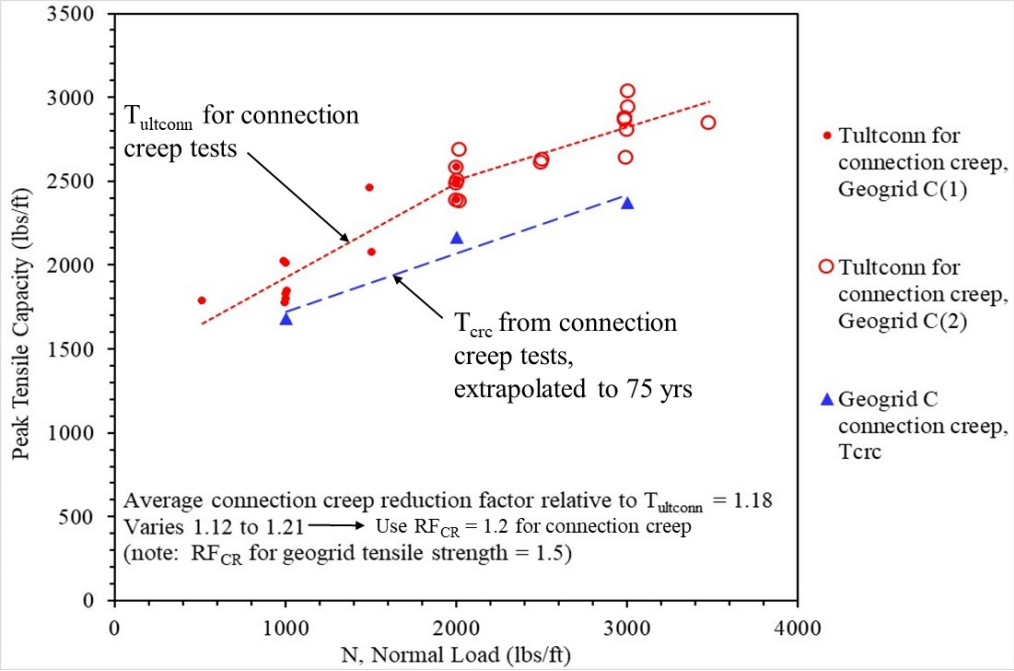

S = equivalent uniform height of surcharge = 0 ft

K_{avh} and K_{abh} remain unchanged relative to Example 1 and Example 2 at 0.283, and Φ_{fb} = 1.0.

The reinforcement stiffness values used in the calculations to follow, the geogrid stiffness needs to be adjusted to account for the reinforcement coverage ratio, R_c of 0.90.

Since the soil failure limit state usually controls the amount of reinforcement required, this limit state is evaluated first, and T_{max} is calculated, for the wall design.

15-E-8.2 Calculations for Soil Failure Limit State Design (Service I)

As is true for examples 2 and 3, for Example 4 the factored reinforcement peak strain for each layer should be 2.0% or less for a modular block faced wall (i.e., stiff face) in this example. Some trial-and-error is typically required to establish what reinforcement stiffness values are required, starting with the stiffness values required to meet the soil failure limit, as the soil failure limit often controls the design of geosynthetic walls. However, since this is a specific hypothetical wall system, the weakest geogrid available for the wall system should be used as the starting point to check the soil failure limit state. Therefore, begin by calculating T_{max} using the minimum stiffness reinforcement product available for the wall system, which is Geogrid A in Figure 15-E-13. The creep stiffness, J_i, of Geogrid A is 19.2 kips/ft (per unit of reinforcement product width), and its tensile strength T_{MARV} is 3.50 kips/ft and T_{al} is 1.61 kips/ft (also per unit of reinforcement product width).

The contributing factors, coefficients and parameters that comprise the T_{max} equation can be found in Allen and Bathurst (2015) and Table 15-E-1. To calculate T_{max}, the reinforcement stiffness must be per unit of wall width rather than per unit of reinforcement product width; hence, R_cJ_i must be used where the reinforcement stiffness value is required. Therefore, considering a total of 10 layers, the parameters used to determine T_{max} are calculated as follows:

$$S_{\text{global}} = \frac{J_{\text{ave}}}{(\text{H/n})} = \frac{\sum_{i=1}^{n} R_c J_i}{H} = (10 \times 0.90 \times 19.2 \text{ kips/ft})/20 \text{ ft} = 8.65 \text{ ksf}$$

$$\Phi_g = \alpha \left(\frac{S_{\text{global}}}{p_a}\right)^{\beta} = 0.16 \times (8.65 \text{ ksf}/2.11 \text{ ksf})^{0.26} = 0.231$$

$$\Phi_{fb} = \left(\frac{K_{abh}}{K_{avh}}\right)^{d} = (0.283/0.283)^{0.4} = 1.0$$

$$S_{\text{local}} = \left(\frac{R_c J}{S_v}\right)_i = (0.90 \times 19.2 \text{ kips/ft})/(2.0 \text{ ft}) = 8.65 \text{ ksf for Layer 6}$$

$$S_{localave} = \frac{\sum \left({}^{R_c J}/_{S_v}\right)_i}{n} = \frac{7.42 + 8 \times 8.65 + 10.4}{10} = 8.70\ ksf$$

where, n = 10 is the number of reinforcement layers. Therefore, Φ_{local} is calculated as follows:

$$\Phi_{local} = \left(\frac{S_{local}}{S_{localave}}\right)^{0.5} = \left(\frac{8.70\ ksf}{8.70\ ksf}\right)^{0.5} = 1.00\ \ (Layer\ 6)$$

To determine the facing stiffness factor, the facing stiffness parameter, F_f does not change, and the facing stiffness factor is calculated as:

$$\Phi_{fs} = \eta \left(\left(\frac{S_{global}}{p_a}\right) F_f\right)^{\kappa} = 0.57 \times \left(\left(\frac{8.65\ ksf}{2.11\ ksf}\right) \times 1.61\right)^{0.15} = 0.757$$

Since c = 0, the cohesion factor, Φ_c = 1.0.

D_{tmax} does not change relative to the previous calculation (i.e., D_{tmax} for Layer 6 is 0.825).

T_{max} for Layer 6 is calculated as follows:

$$T_{max} = S_v\left[H\gamma_r D_{tmax} + \left(\frac{H_{ref}}{H}\right)S\gamma_f + LL\right]K_{avh}\Phi_{fb}\Phi_g\Phi_{fs}\Phi_{local}\Phi_c$$

$$T_{max} = 2.0\ ft\left[20ft \times 0.130\ kcf \times 0.825 + \left(\frac{20\ ft}{20\ ft}\right)0\ ft \times 0.130\ kcf + 0\right]0.283 \times 1.0 \times 0.231 \times 0.757 \times 1.10 \times 1.0$$

T_{max} = <u>0.211 kips/ft of wall width</u>

T_{max}, and the calculated parameters needed to calculate T_{max}, are summarized in Table 15-E-14 for the rest of the layers.

Using Equation 15-14 with load factor γ_{sf} = 1.2, and resistance factor ϕ_{sf} = 1.0 (Table 15-5), the factored reinforcement strain corresponding to Layer 10 is computed as:

$$\varepsilon_{rein} = \frac{\gamma_{p-EVsf}T_{max}}{\phi_{sf}R_cJ_i} = \frac{1.2 \times 0.061\frac{kips}{ft}}{1.0 \times 0.90\ \times 19.2\frac{kips}{ft}} \times 100\% = 0.42\% \leq 2\% \quad OK$$

For Layer 6:

$$\varepsilon_{rein} = \frac{\gamma_{p-EVsf}T_{max}}{\phi_{sf}R_cJ_i} = \frac{1.2 \times 0.211\frac{kips}{ft}}{1.0 \times 0.90 \times 19.2\frac{kips}{ft}} \times 100\% = 1.47\% \leq 2\% \quad OK$$

See Table 15-E-14 for the calculation results for the rest of the layers for the soil failure limit state for Example 4. Note that the calculated factored strains are significantly less than the target maximum strain of 2.0%. This means that if a weaker geogrid reinforcement was available for this wall system, a weaker product could have been used. Alternatively, the coverage ratio R_c could have been reduced further (i.e., to less than 0.90).

15-E-8.3 Calculations for Reinforcement Rupture Limit State (Strength I)

Since no live load is present, the required long-term reinforcement strength (T_{al}) for Layer 6 is computed using Equation 15-E-5.

The minimum required value of T_{al} and T_{ult} for Layer 6 is therefore:

$$T_{al} \geq \frac{\gamma_{p-EV} T_{max}}{\phi_{rr} R_c} = \frac{1.35 \times 0.211 \frac{kips}{ft}}{0.80 \times 0.90} = 0.398 \frac{kips}{ft}$$

$$T_{ult} = T_{al} RF_{ID} RF_{CR} RF_D = 0.398 \times 1.12 \times 1.5 \times 1.3 = 0.868 \frac{kips}{ft}$$

For Layer 6, the calculated T_{al} for reinforcement rupture, using only a stiffness that is consistent with available wall system specific reinforcement products, is significantly less than T_{al} needed to achieve the stiffness required for the soil failure limit state (i.e., 0.398 kips/ft << 1.26 kips/ft) and significantly less that the T_{al} for the weakest geogrid product available for the wall system (i.e., 0.398 kips/ft << 1.61 kips/ft). Therefore, to meet the Strength Limit State, reinforcement rupture, Geogrid A can be used. See Table 15-E-14 for the calculation results for the rest of the wall layers.

15-E-8.4 Calculations for Connection Strength Design (Strength I)

To determine the minimum tensile strength needed at the connection to the facing, connection strength data for the facing block – geosynthetic combinations anticipated are needed. It has been assumed for this example that a frictional type connection between the facing blocks and geogrid will be used. Short-term connection test results for the geogrids under consideration in this example are shown in Figure 15-E-13 and Table 15-E-13. T_{lot} values for the connection tests are also summarized in the figure.

Equation 15-E-9 is used to calculate the minimum long-term connection strength needed, T_{ac}(required). For the purposes of this example and to be consistent with the approach taken in the current AASHTO (2020) specifications, the load and resistance factors for the connection rupture limit state are assigned the same values as those used for geosynthetic rupture limit state at locations away from the connection (i.e., $\gamma_{p\text{-}EVc} = \gamma_{p\text{-}EV} = 1.35$ and $\phi_{cr} = \phi_{rr} = 0.80$), and $T_o = T_{max}$.

Therefore, using Equation 15-E-9, at Layer 6, the factored connection load is:

$$T_{ac}(required) = (\gamma_{p-EVc}) T_0 = (1.35) \times 0.211 \frac{kips}{ft} = 0.285 \frac{kips}{ft} \text{ of wall width}$$

To determine the long-term connection strength available, since a dominantly frictional connection is used in this example, the connection strength will be a function of the normal load on the facing blocks, N, which is affected by the depth of the connection below the wall top if the facing is vertical (i.e., no facing batter), but is limited by the hinge height (see AASHTO 2020 LRFD Bridge Design Manual, Art. 11.10.6.4.4b) if the facing is battered. For this example, the facing is assumed to have no batter (i.e., is vertical).

To determine $T_{ultconn}$, the normal force, N, on the facing blocks, in units of load per unit of wall width, must be determined at each layer depth. The following equation can be used for this purpose for a vertical wall:

$$N = \gamma_{block} \times z \times W_u \quad (15\text{-E-}34)$$

where,

γ_{block} = average unit weight of block plus any soil placed in block hollow areas, if any are present (kcf)

z = depth below wall top at face to reinforcement layer (for battered walls, use the hinge height as a limit) (ft)

W_u = facing block width (face to back of block) (ft)

Using the relationships presented in Figure 15-E-13 and Table 15-E-13, $T_{ultconn}$ is calculated as follows for Layer 6, using the connection test results for Geogrid A (i.e., this geogrid is the minimum strength geogrid available for the specific wall system that meets or exceeds soil failure limit state requirements):

$$N = 0.12\ kcf \times 9.33ft \times 1.0ft = 1.12 \text{ kips/ft}$$

Therefore,

$$T_{ultconn} = 0.976 + 1.12 \times \text{Tan } 42^o = 1.98 \text{ kips/ft}$$

Expressed as a portion of T_{lot}, the short-term connection strength CR_u is (1.98 kips/ft)/(3.484 kips/ft) = 0.568.

Combining equations 15-E-11 and 15-E-12, the available, factored long-term connection strength is calculated as follows:

$$T_{ac}(available) = \frac{\phi_{cr} \times T_{ult} \times \left(\frac{T_{ultconn}}{RF_{CR} \times T_{lot}}\right) R_c}{RF_D} \quad (15\text{-E-}35)$$

For Layer 6,

$$T_{ac}(available) = \frac{0.8 \times \frac{3.50kips}{ft} \times \frac{1.98\frac{kips}{ft}}{1.5 \times 3.484\frac{kips}{ft}}(0.9)}{1.3} = 0.734\frac{kips}{ft}$$

Note that T_{ult} in this equation is a Minimum Average Roll Value (MARV), whereas T_{lot} is the tensile strength of the geogrid used for the connection testing.

At Layer 6,

T_{ac} (available) > T_{ac} (required (i.e., 0.734 kips/ft >> 0.285 kips/ft).

Therefore, connection strength does not control the design.

Focusing instead on the minimum geogrid tensile strength needed to safely meet the demand at the connection, determine T_{ult} as follows:

$$T_{ult}(min.required) = \left(\frac{\gamma_{p-EVc}}{\phi_{cr} R_c}\right) T_0 RF_D RF_{CR} \left(\frac{T_{lot}}{T_{ultconn}}\right) \quad (15\text{-E-}36)$$

Note that $T_{lot}/T_{ultconn}$, which essentially is $1/CR_u$, will be specific to the geosynthetic reinforcement and block/connector system used, in addition to being a function of the normal force between blocks at the connection, N. This equation can be used to estimate the ultimate geogrid tensile strength, T_{ult}, required at the connections to compare to the T_{ult} required for the other limit states, to help determine which limit state is controlling the design.

With the above in mind, for Layer 6, T_{ult} (min. required, on a strength per unit of reinforcement width basis) for connection strength is as follows, using RF_{CR} determined from the in-isolation geogrid creep rupture data:

$$T_{ult}(min.required) = \left(\frac{1.35}{0.8\times0.9}\right) \times 0.211 \times 1.3 \times 1.5 \left(\frac{3.484}{1.98}\right) = 1.36 \frac{kips}{ft}, \text{ and}$$

T_{al} = (1.36 kips/ft)/2.18 = 0.623 kips/ft.

On a strength per unit of reinforcement width basis, this minimum required geosynthetic T_{al} of 0.623 kips/ft is below the T_{al} value of the weakest geogrid product available for this wall system (i.e., Geogrid A, in which T_{MARV} = 3.50 kips/ft and a T_{al} = 3.50/2.18 = 1.61 kips/ft). So at this point, the minimum strength product available for this wall system is in fact controlling design.

15-E-8.5 Calculations for Pullout Limit State Design (Strength I)

The default pullout parameters α and F* specified in AASHTO (2020) are used for this example design and are the same as in Example 1 (α = 0.8 and F* = 0.452). The vertical stress, σ_v, over the reinforcement anchorage length, conservatively calculated using Equation 15-E-29, is the same as in Example 1 (0.173 ksf). Since pullout is usually most critical near the wall top, this example pullout calculation is carried out for Layer 10.

Using Equation 15-E-30, the required factored length of reinforcement in the resistant zone (i.e., behind the active wedge) for Layer 10 is:

$$L_e = \frac{\gamma_{p-EV} T_{max}}{\phi_{po} C(\alpha F^*)\sigma_v R_c}$$

T_{max} used here corresponds to the minimum stiffness product available for the wall system (i.e., J_i = 19.2 kips/ft). As before, R_c = 0.90 and all other parameters and their values have been defined earlier. For layer 10, per ft of reinforcement width:

$$L_e = \frac{1.35 \times 0.061 \frac{kips}{ft}}{0.70 \times 2(0.8 \times 0.452)(0.173\ ksf)0.90} = 1.04\ ft$$

To determine the total reinforcement length needed, L, the length of reinforcement within the active zone, L_a, must be calculated. For geosynthetic walls, the active zone is assumed to be bounded by the Rankine active zone (wedge). L_a is calculated as follows for a vertical wall (at Layer 10):

$L_a = (H - z) \tan(45° - \phi_r/2)$ = (20 ft – 1.33 ft) tan (45° – 34°/2) = 9.93 ft

The minimum length allowed for L_e is 3 ft (AASHTO 2020), which is greater than the calculated L_e required for pullout for layer 10. Therefore, using L_e = 3 ft, the total reinforcement length required for layer 10 is:

$$L = L_a + L_e = 9.93 \text{ ft} + 3 \text{ ft} = 12.9 \text{ ft}$$

Strength Limit State calculation results for all the layers (i.e., reinforcement rupture, connection rupture, and pullout) are summarized in Table 15-E-15 (a and b).

It should be recalled that the minimum length of reinforcement for typical reinforced soil walls is 0.7H = 0.7×(20 ft) = 14 ft. Therefore, pullout does not control the reinforcement length required. Note that other limit state design calculations can result in greater reinforcement length, such as external stability (e.g., sliding) or global stability.

15-E-8.6 Calculations for Determination of T_{max} + T_{md} (Extreme Event I - Seismic)

The calculation of T_{max} as described and carried out earlier in this example using the Stiffness Method is also applicable for seismic design for the static portion of the reinforcement load. T_{md}, the incremental dynamic inertia force per reinforcement layer, must be added to T_{max} to determine the total reinforcement load for each layer during seismic loading.

T_{md} is calculated as shown for Example 2, considering the weight of the facing blocks.

$$T_{md} = \left(\frac{P_i}{n}\right) = \frac{4.24\frac{kips}{ft}}{10} = 0.424\frac{kips}{ft}$$

The total load per reinforcement layer during seismic shaking, T_{totalf}, is then calculated using superposition as follows, for Layer 6):

$$T_{totalf} = \gamma_{seis}(T_{max} + T_{md}) = 1.0\left(0.211\frac{kips}{ft} + 0.424\frac{kips}{ft}\right) = 0.635\frac{kips}{ft}$$

For seismic pullout design, T_{totalf} is used. However, for reinforcement rupture and connection rupture under seismic loading, the static and dynamic components of the reinforcement load must be handled separately. The reason for this is that the strength required to resist T_{max} must include the effects of creep because it is a sustained load, but the strength required to resist T_{md} should not include the effects of creep due to the transient nature of T_{md}.

15-E-8.7 Calculations for Reinforcement Rupture (Extreme Event I - Seismic)

Using equations 15-E-21, 15-E-22, and 15-E-23, T_{ult} for the static portion of load at Layer 6 is:

$$S_{rs} = \frac{\gamma_{seis} T_{max} RF}{\phi R_c} = \frac{1.0 \times 0.211 \frac{kips}{ft} \times 2.18}{1.0 \times 0.90} = 0.511 \frac{kips}{ft}$$

T_{ult} for dynamic portion of load at Layer 6 is:

$$S_{rt} = \frac{\gamma_{seis} T_{md} RF_{ID} RF_D}{\phi R_c} = \frac{1.0 \times 0.424 \frac{kips}{ft} \times 1.12 \times 1.3}{1.0 \times 0.90} = 0.686 \frac{kips}{ft}$$

$T_{ult} = S_{rs} + S_{rt} = 0.511$ kips/ft + 0.687 kips/ft = 1.20 kips/ft

$T_{al} = 1.20$ kips/ft/2.18 = 0.550 kips/ft of reinforcement product width.

15-E-8.8 Calculations for Connection Rupture (Extreme Event I - Seismic)

To determine the T_{ult} needed to prevent connection rupture during seismic loading, need CR_u and CR_{cr}, which are calculated as follows for Layer 6:

$$CR_u = \frac{T_{ultconn}}{T_{lot}} = \frac{1.98 \frac{kips}{ft}}{3.484 \frac{Kips}{ft}} = 0.568$$

$$CR_{cr} = \frac{T_{ultconn}}{RF_{CR} T_{lot}} = \frac{1.98 \frac{kips}{ft}}{1.5 \times 3.484 \frac{Kips}{ft}} = 0.379$$

Because this is a frictional connection, the connection resistance is reduced using a factor, F_r, of 0.8 to account for potential loss of frictional resistance due to the earthquake ground motion.

$$S_{rsc} = \frac{\gamma_{seis} T_0 RF_D}{F_r \phi CR_{cr} R_c} = \frac{1.0 \times 0.211 \frac{kips}{ft} \times 1.3}{0.8 \times 1.0 \times 0.379 \times 0.90} = 1.01 \frac{kips}{ft}$$

$$S_{rtc} = \frac{\gamma_{seis} T_{md} RF_D}{F_r \phi CR_u R_c} = \frac{1.0 \times 0.424 \frac{kips}{ft} \times 1.3}{0.8 \times 1.0 \times (0.568) \times 0.90} = 1.35 \frac{kips}{ft}$$

$T_{ult} = S_{rsc} + S_{rtc} = 1.01$ kips/ft+1.35 kips/ft = 2.36 kips/ft

$T_{al} = 2.36$ kips/ft/2.18 = 1.08 kips/ft of reinforcement product width.

On a load per reinforcement product width basis, this minimum required geosynthetic T_{al} of 1.08 kips/ft is still below the T_{al} value of the minimum geogrid product tensile strength T_{al} available for this wall system (i.e., Geogrid A) of 1.61 kips/ft. Therefore, the minimum strength product available for this wall system is still controlling the design and can be used for all the reinforcement layers.

15-E-8.9 Calculations for Pullout Limit State Design (Extreme Event I - Seismic)

Using equations 15-E-29 and 15-E-30, L_e for Layer 10 (i.e., at the wall top) is determined as follows:

$\sigma_v = z\gamma_r + S_{sur}\gamma_f$

$\sigma_v = (1.33\text{ ft})(0.13\text{ kcf}) + (0)(0.13\text{ kcf}) = 0.173\text{ ksf}$

$$L_e = \frac{\gamma_{seis}(T_{max} + T_{md})}{\phi C(0.8\alpha F^*)\sigma_v R_c} = \frac{1.0(0.061 + 0.424)}{1.0 \times 2 \times (0.8 \times 0.8 \times 0.452) \times 0.173\ kcf \times 0.90}$$

$L_e = 5.39\text{ ft}$

$L_a = (H - z)\tan(45° - \phi_r/2) = (20\text{ ft} - 1.33\text{ ft})\tan(45° - 34°/2) = 9.93\text{ ft}$

$L = L_a + L_e = 9.93\text{ ft} + 5.39\text{ ft} = 15.3\text{ ft}$

Therefore, at the wall top, pullout is controlling the reinforcement length needed.

15-E-8.10 Calculations to Check to Make Sure Stiffness and Strength Required are Properly Matched (Extreme Event I, Seismic)

A substantial increase in tensile strength was required to achieve internal stability for seismic loading, given the high ground acceleration required for this hypothetical site in the Puget Sound region of western Washington. However, the weakest geogrid product available for the example wall system (i.e., Geogrid A) has a T_{al} of 1.61 kips/ft of reinforcement product width, which is significantly greater than the T_{al} needed of 1.08 kips/ft. Therefore, an additional iteration to match the available reinforcement strength and stiffness to the demand is not required.

Typically, this check will show that another iteration to complete the wall design is not required, except possibly for very inefficient facing/reinforcement connections combined with high seismic loading.

15-E-8.11 Summary for Example 4 Design

See Table 15-E-14 for the calculation results for all of the layers for the Service I, Strength I, and Extreme Event I limit states. These calculation results are plotted in figures 15-E-15 through 15-E-17. In Figure 15-E-15, the minimum tensile strength needed to just meet the soil failure limit state is also shown for illustration purposes, which demonstrates that the strength required to just meet the soil failure limit is significantly less than the strength of the minimum tensile strength geogrid (i.e., Geogrid A) available for the wall system.

In summary, for the final internal stability design for Example 4 using the Stiffness Method, the following would be specified with regard to reinforcement properties and spacing for the optimized design, and the following observations can be made:

- The vertical spacing of reinforcements is 2 ft throughout the wall height, and the coverage ratio is a minimum of 0.90.
- The minimum reinforcement length for internal stability (i.e., pullout) is 14 ft for the Strength Limit, and all layers except the top layer for seismic did not exceed this minimum length. The top layer length required is 15.3 ft for seismic for the Stiffness Method, which is greater than the 0.7H minimum. The longer reinforcement length due to pullout is consistent with good detailing for MSE walls in AASHTO LRFD Article 11.10.7.4.
- The lowest strength PET geogrid included with the wall system was greater in strength and stiffness than required by the Stiffness Method design (see figures 15-E-15 and 15-E-16). Comparative calculations were done with the Simplified Method, but those calculations showed that greater tensile strength than the minimum strength product for the wall system and reduced vertical spacing were required to have enough reinforcement for equilibrium (not shown in figures 15-E-15 and 15-E-16, as a layer by layer comparison between methods was not possible due to the increase in the number of layers needed for the Simplified Method).
- Using Geogrid A as the minimum strength geogrid available, the Simplified Method required a total long-term tensile strength T_{al} of 30.1 kips/ft for the entire wall section (distributed among 15 reinforcement layers), whereas the Stiffness Method would allow Geogrid A to be used for all layers, but distributed among only 10 reinforcement layers, for a total of 16.1 kips/ft for the entire wall section. Therefore, the Stiffness Method would require only 53% of the total reinforcement strength required by the Simplified Method. The Stiffness method could have allowed even less total reinforcement strength to be used if the coverage ratio R_c was reduced to less than 0.90, or if a weaker geogrid was available for this system.
- Overall, the required strength and stiffness of the reinforcement needed is in the low to mid-range of the geogrid product lines available. Note that the ground acceleration used for the seismic design represents what would be included in Seismic Zone 4, which is the highest seismic zone.

Table 15-E-14 Summary of Example 4 wall design calculations using Stiffness Method, R_c = 0.90, and frictional wall face connection (Service, Strength, and Extreme Event I Limit States): (a) Calculation of T_{max} using minimum strength product available for wall system, (b) Service and Strength Limit State calculations, and (c) Extreme Event I (seismic) Limit State calculations.

a)	T_{max} Equation (Eq. 15-E-1) Parameters											+Unfactored maximum reinforcement load
Layer Number	z (ft)	S_v (ft)	*$R_c J_i$ (kips/ft)	S_{global} (ksf)	S_{local} (ksf)	D_{tmax}	F_f	Φ_g	Φ_{local}	Φ_{fb}	Φ_{fs}	xT_{max} and T_0 (kips/ft)
10 (top)	1.33	2.33	17.3	8.65	7.42	0.220	1.61	0.231	0.92	1.0	0.757	0.061
9	3.33	2.00	17.3	8.65	8.65	0.372	1.61	0.231	1.00	1.0	0.757	0.095
8	5.33	2.00	17.3	8.65	8.65	0.523	1.61	0.231	1.00	1.0	0.757	0.134
7	7.33	2.00	17.3	8.65	8.65	0.674	1.61	0.231	1.00	1.0	0.757	0.173
6	9.33	2.00	17.3	8.65	8.65	0.825	1.61	0.231	1.00	1.0	0.757	0.211
5	11.33	2.00	17.3	8.65	8.65	0.976	1.61	0.231	1.00	1.0	0.757	0.250
4	13.33	2.00	17.3	8.65	8.65	1.00	1.61	0.231	1.00	1.0	0.757	0.256
3	15.33	2.00	17.3	8.65	8.65	1.00	1.61	0.231	1.00	1.0	0.757	0.256
2	17.33	2.00	17.3	8.65	8.65	1.00	1.61	0.231	1.00	1.0	0.757	0.256
1	19.33	1.67	17.3	8.65	10.4	1.00	1.61	0.231	1.09	1.0	0.757	0.234
Base of wall	20											$\sum T_{max}$= 1.93

b)		Reinforcement Rupture (Strength Limit)				Connection Rupture (Strength Limit)			Soil Failure (ServiceLimit)	Pullout (Strength Limit)	
Layer Number	z (ft)	#Reinforce-ment Product Available for Wall System	#Minimum Available Product Tensile Strength, T_{al} (kips/ft)	#Minimum Required Strength per Unit Width of Reinforcement		Connection Capacity $T_{ultconn}$ (kips/ft)/% of T_{ult}	#Minimum required strength per Unit Width of Reinforcement		Factored ε_{rein} (%)	Anchorage length L_e (ft)	
				T_{al} (kips/ft)	$T_{ult} = T_{al} \times RF$ (kips/ft)		T_{al} (kips/ft)	$T_{ult} = T_{al} \times RF$ (kips/ft)		Required	Minimum allowed
Column→	1			3	4	7	8	9	10	11	12
10 (top)	1.33	Geogrid A	1.61	0.11	0.25	1.09/0.31	0.32	0.69	0.42	1.04	
9	3.33	Geogrid A	1.61	0.18	0.39	1.32/0.38	0.42	0.91	0.66	0.65	
8	5.33	Geogrid A	1.61	0.25	0.55	1.55/0.45	0.50	1.10	0.93	0.57	
7	7.33	Geogrid A	1.61	0.32	0.71	1.79/0.51	0.57	1.24	1.20	0.54	
6	9.33	Geogrid A	1.61	0.40	0.87	1.95/0.56	0.62	1.36	1.47	0.52	< 3.0
5	11.33	Geogrid A	1.61	0.47	1.02	2.05/0.59	0.67	1.46	1.73	0.50	(OK)
4	13.33	Geogrid A	1.61	0.48	1.05	2.15/0.62	0.67	1.47	1.78	0.44	
3	15.33	Geogrid A	1.61	0.48	1.05	2.24/0.64	0.66	1.45	1.78	0.38	
2	17.33	Geogrid A	1.61	0.48	1.05	2.34/0.67	0.65	1.43	1.78	0.34	
1	19.33	Geogrid A	1.61	0.44	0.96	2.42/0.69	0.59	1.29	1.62	0.28	
Base of wall	20		$\sum T_{al}$= 16.1	$\sum T_{al}$= 3.61	$\sum T_{ult}$= 7.89		$\sum T_{al}$= 5.67	$\sum T_{ult}$= 12.4			

≤ 2.0% (OK)

Table 15-E-14, continued.

Summary of Example 4 wall design calculations using Stiffness Method, R_c = 0.90, and frictional wall face connection (Service, Strength, and Extreme Event I Limit States): (c) Extreme Event I (seismic) Limit State calculations.

c)		Reinforcement Rupture (Extreme Event I Limit)				Connection Rupture (Extreme Event I Limit)			Pullout (Extreme Event I Limit)		
Layer Number	z (ft)	#Reinforce-ment Product Available for Wall System	#Minimum Available Product Tensile Strength, T_{al} (kips/ft)	#Minimum Required Strength per Unit Width of Reinforcement		Connection capacity $T_{ultconn}$ (kips/ft)/% of T_{ult}	#Minimum Required Strength per Unit Width of Reinforcement		Anchorage length L_{eseis} (ft)		Total Reinforcement Length (ft)
				T_{al} (kips/ft)	$T_{ult} = T_{al} \times RF$ (kips/ft)		T_{al} (kips/ft)	$T_{ult} = T_{al} \times RF$ (kips/ft)	Required	Minimum allowed	(minimum is 0.7H = 14 ft)
Column→	1			3	4	7	8	9		10	12
10 (top)	1.33	Geogrid A	1.61	0.38	0.83	1.09/0.31	1.33	2.90	5.39	< 3.0 (No, so pullout controls length, but only at wall top))	15.3
9	3.33	Geogrid A	1.61	0.42	0.92	1.32/0.38	1.22	2.67	2.31		11.2
8	5.33	Geogrid A	1.61	0.46	1.01	1.55/0.45	1.16	2.53	1.55		9.3
7	7.33	Geogrid A	1.61	0.51	1.11	1.79/0.51	1.11	2.43	1.20		7.9
6	9.33	Geogrid A	1.61	0.55	1.20	1.95/0.56	1.08	2.35	1.01		6.7
5	11.33	Geogrid A	1.61	0.59	1.29	2.05/0.59	1.05	2.30	0.88		5.5
4	13.33	Geogrid A	1.61	0.60	1.31	2.15/0.62	1.05	2.29	0.75		4.3
3	15.33	Geogrid A	1.61	0.60	1.31	2.24/0.64	1.03	2.26	0.66		3.1
2	17.33	Geogrid A	1.61	0.60	1.31	2.34/0.67	1.02	2.23	0.58		2.0
1	19.33	Geogrid A	1.61	0.57	1.25	2.42/0.69	0.96	2.10	0.50		0.9
Base of wall	20		$\sum T_{al}$= 16.1	$\sum T_{al}$= 5.28	$\sum T_{ult}$= 11.5		$\sum T_{al}$= 11.0	$\sum T_{ult}$= 24.1			

*Minimum geosynthetic stiffness available for wall system (i.e., Geogrid A).

+These values are on a load per unit of wall width basis in accordance with Article 11.10.6.4.1 of the AASHTO LRFD Bridge Design Manual (AASHTO 2020).

#For comparison to geogrid product tensile strength that is not reduced by Rc (i.e., strength per unit of reinforcement width basis).

xTmd for all reinforcement layers is 0.424 kips/ft.

Figure 15-E-15 Stiffness Method internal stability design for Service and Strength limit states (Example 4).

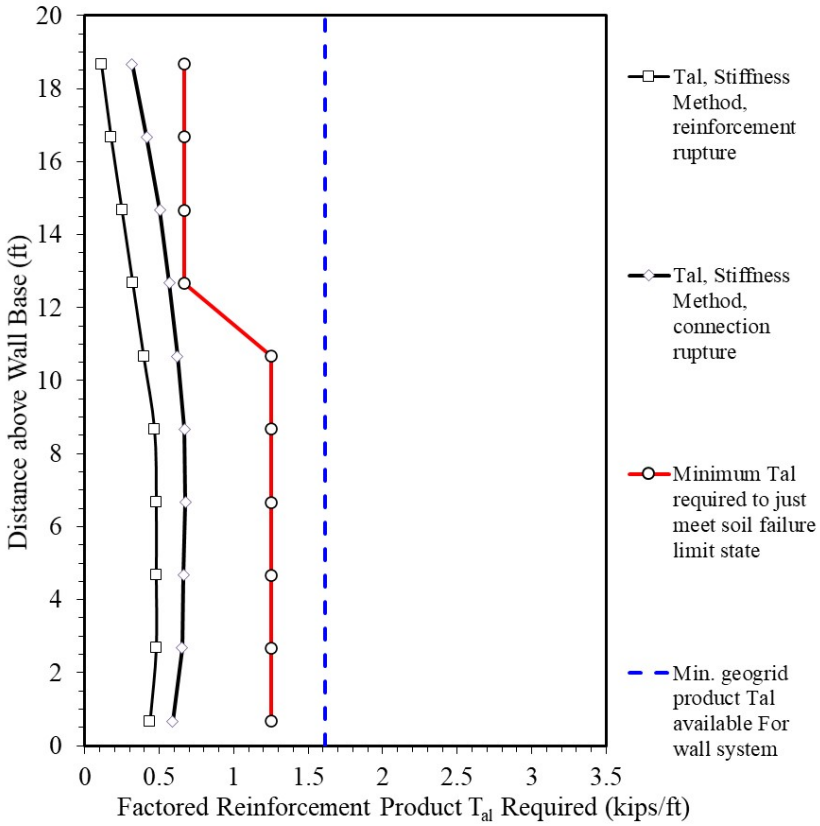

Figure 15-E-16 Stiffness Method internal stability design to the Simplified Method design, for Extreme Event I (seismic) limit state (Example 4).

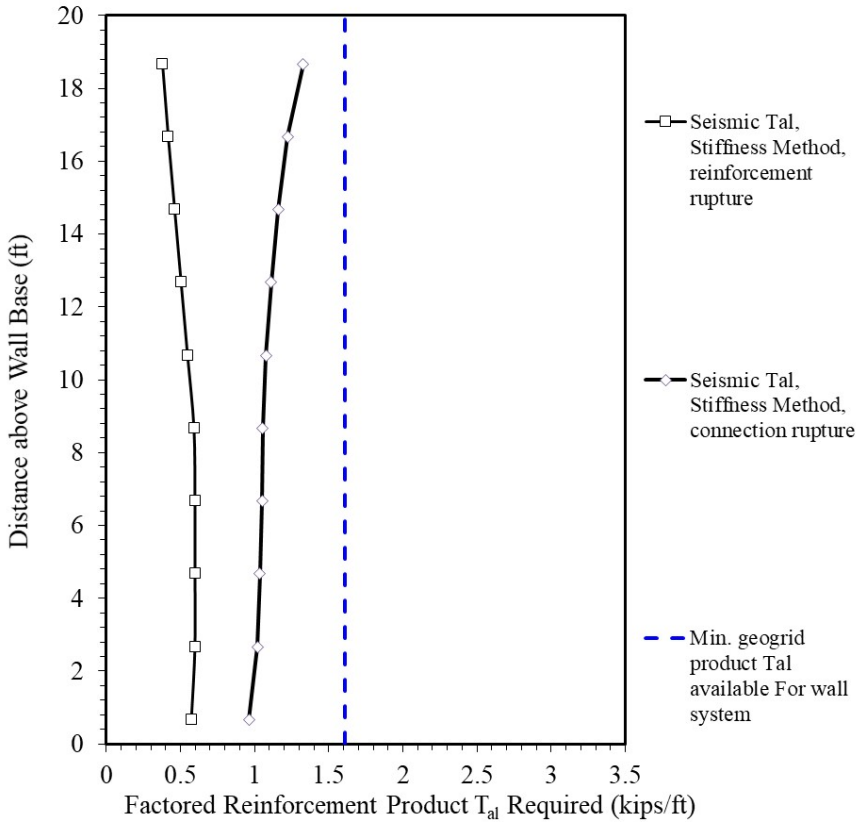

Figure 15-E-17 Comparison of Stiffness Method internal stability design to the Simplified Method design, for Extreme Event I (seismic) limit state, pullout (Example 4).

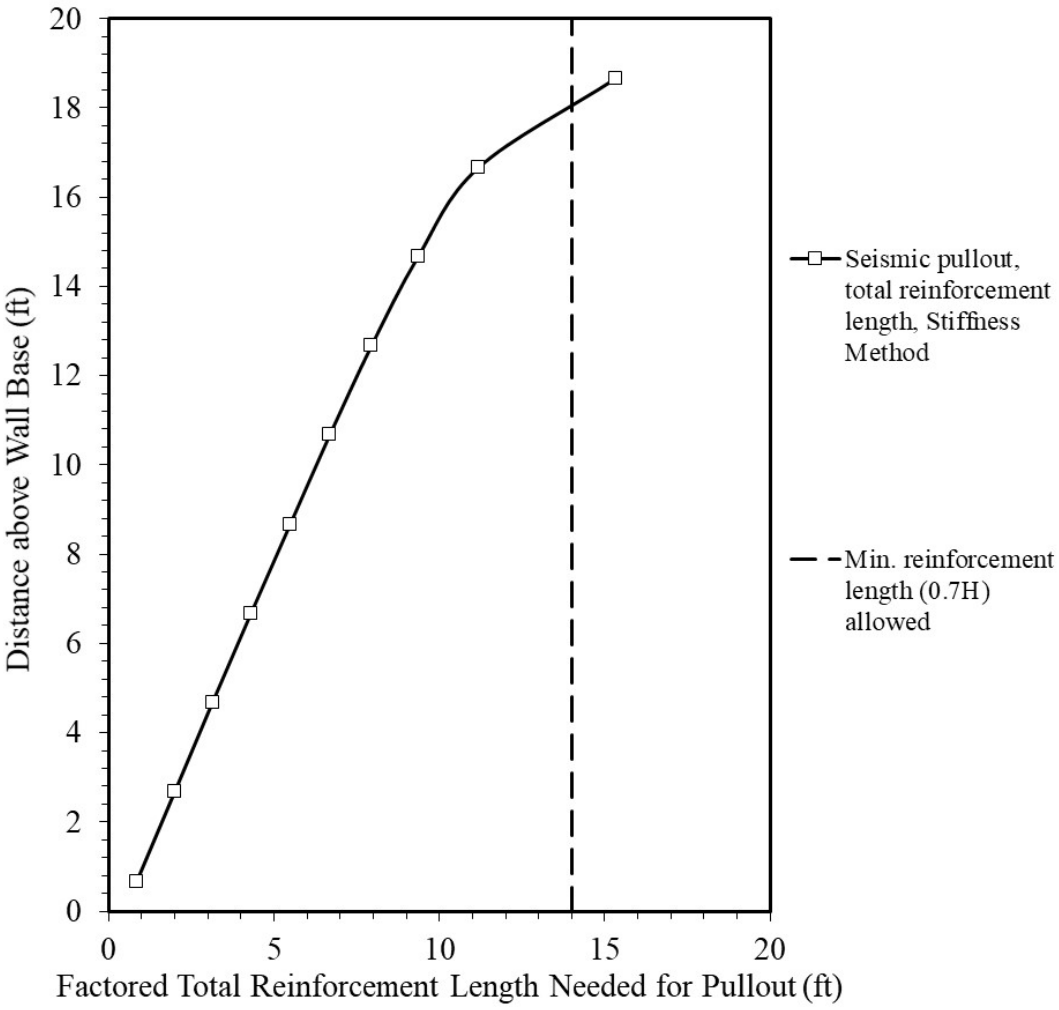

15-E-9 Stiffness Method Design Example 5: Wrapped (Flexible) Faced Geosynthetic Wall Using Backfill with Small Cohesion

15-E-9.1 General

This example is an extension of Example 1 to consider the effect of wall backfill soil cohesion on wall behavior during and after wall construction. Therefore, this is not a completely developed example. The only purpose of this example is to demonstrate the types of design problems, and possibly long-term wall performance problems, that may occur if cohesion is present, especially if the design is conducted taking into account the "beneficial" effect that cohesion can have in reducing the reinforcement load, T_{max}. The key issue here is the reliability of the cohesion long-term (e.g., will changes in moisture content, softening of the clayey backfill, or soil creep over time occur, reducing the cohesion and allowing the reinforcement layer T_{max} values to increase over time?). In addition to this, as the fines content and plasticity of the backfill increase, the more likely is the buildup of water in the backfill to occur, causing large increases in reinforcement load and wall face deformations (Allen and Bathurst 2009).

Material properties are the same as in Example 1, which are provided in Table 15-E-3, with the exception that the backfill is assumed to have some clayey fines, resulting in a relatively small soil cohesion of 0.20 ksf in addition to the friction angle of 34°.

Table 15-E-2 provides requirements for how to address soil cohesion in the wall backfill. In general, backfill materials that have some cohesion should be avoided, especially in western Washington where rainfall is relatively plentiful. However, in the unusual case in which MSE wall backfill with a limited amount of cohesion cannot be avoided, the effect of that soil cohesion on wall strains and deformations can be assessed using the Stiffness Method.

In this example, the effect of this cohesion on T_{max} at end of construction (i.e., EOC) for the wall, and potential loss of that cohesion over time, is investigated. The results generated in this example will be compared to the Example 1 design, which in effect is the design that would be done if some cohesion is present, but the cohesion is ignored (i.e., using $\phi = 34°$ and $c = 0$). The reinforcement stiffness for this example is assumed to be the same as is used in Example 1 (i.e., see Table 15-E-3).

For this example design, determination of the minimum reinforcement stiffness required to keep the peak strain level in the reinforcement layers at 2.5% or less required trial-and-error to optimize the reinforcement design. As in the previous example, Layer 6 will be the primary focus to illustrate the method, except for pullout, in which the uppermost layer (Layer 10) is the focus to illustrate the method. Note that the coverage ratio, R_c, is equal to 1.0 for this example.

$$S_{\text{global}} = \frac{J_{\text{ave}}}{(\text{H/n})} = \frac{\sum_{i=1}^{n} R_{ci} J_i}{H} = (4 \times 1.0 \times 8.6 \text{ kips/ft} + 6 \times 1.0 \times 17.0 \text{ kips/ft})/20 \text{ ft} = 6.82 \text{ ksf}$$

$$\Phi_g = \alpha \left(\frac{S_{\text{global}}}{p_a}\right)^{\beta} = 0.16 \times (6.82 \text{ ksf}/2.11 \text{ ksf})^{0.26} = 0.217$$

$$\Phi_{fb} = \left(\frac{K_{abh}}{K_{avh}}\right)^{d} = (0.283/0.283)^{0.4} = 1.0$$

$$S_{\text{local}} = \left(\frac{R_c J}{S_v}\right)_i = (1.0 \times 17.0 \text{ kips/ft})/(2.0 \text{ ft}) = 8.50 \text{ ksf for Layer 6}$$

$$S_{localave} = \frac{\sum \left({}^{R_c J}/_{S_v}\right)_i}{n} = \frac{3.65 + 3 \times 4.25 + 5 \times 8.50 + 10.2}{10} = 6.91\ ksf$$

where, n = 10 is the number of reinforcement layers. Therefore, Φ_{local} is calculated as follows:

$$\Phi_{local} = \left(\frac{S_{local}}{S_{localave}}\right)^{0.5} = \left(\frac{8.5\ ksf}{6.91\ ksf}\right)^{0.5} = 1.11\ \ (layer\ 6)$$

For a flexible wall face, the facing stiffness factor is assumed to be 1.0.

Given c = 0.20 ksf, the cohesion factor, Φ_c is calculated as follows:

$$\Phi_c = e^{-16(c/(\gamma_r H))} = e^{-16(0.20\ ksf/(0.13\ kcf \times 20\ ft))} = 0.292$$

D_{tmax} is determined for Layer 6 as follows:

$z_b = C_h \times (H)^y \times \Phi_{fb} = (0.32 \times (20 \text{ ft})^{1.2}) \times 1.0 = 11.65 \text{ ft}$

For $z \le z_b$: $D_{tmax} = D_{tmax0} + (z/z_b) \times (1 - D_{tmax0}) = 0.12 + (9.33 \text{ ft}/11.65 \text{ ft}) \times (1 - 0.12) = 0.825$

For bottom layers where z > z_b: D_{tmax} = 1.0

T_{max} for Layer 6 is calculated as follows:

$$T_{max} = S_v\left[H\gamma_r D_{tmax} + \left(\frac{H_{ref}}{H}\right)S\gamma_f + LL\right]K_{avh}\Phi_{fb}\Phi_g\Phi_{fs}\Phi_{local}\Phi_c$$

$$T_{max} = 2.0\ ft\left[20ft \times 0.130\ kcf \times 0.825 + \left(\frac{20\ ft}{20\ ft}\right)0\ ft \times 0.130\ kcf + 0\right]0.283 \times 1.0 \times 0.217 \times 1.0 \times 1.11 \times 0.292$$

T_{max} = <u>0.0853 kips/ft</u>

T_{max}, and the calculated parameters needed to calculate T_{max}, are summarized in Table 15-E-15 for the rest of the layers.

Note that T_{max} for this layer not considering cohesion is 0.292 kips/ft.

Using Equation 15-14 with load factor γ_{sf} = 1.2, and resistance factor ϕ_{sf} = 1.0 (Table 15-5), the factored reinforcement strain corresponding to Layer 10 is computed as:

$$\varepsilon_{rein} = \frac{\gamma_{p-EVsf}T_{max}}{\phi_{sf}R_cJ_i} = \frac{1.2 \times 0.017\frac{kips}{ft}}{1.0 \times 1.0 \times 8.6\frac{kips}{ft}} \times 100\% = 0.25\% \leq 2.5\% \quad OK$$

Assuming no cohesion (i.e., as shown in Example 1), for Layer 10,

$$\varepsilon_{rein} = 0.83\%\ not\ considering\ cohesion \geq 0.25\%\ considering\ cohesion$$

For Layer 6:

$$\varepsilon_{rein} = \frac{\gamma_{p-EVsf}T_{max}}{\phi_{sf}R_cJ_i} = \frac{1.2 \times 0.0853\frac{kips}{ft}}{1.0 \times 1.0 \times 17.0\frac{kips}{ft}} \times 100\% = 0.60\% \leq 2.5\% \quad OK$$

Assuming no cohesion (i.e., as shown in Example 2), for Layer 6,

$$\varepsilon_{rein} = 2.06\%\ not\ considering\ cohesion \geq 0.60\%\ considering\ cohesion$$

See Table 15-E-15 for the calculation results for the rest of the layers.

Based on these calculations, the reinforcement strains increase by a factor of approximately 3.5 post-construction (i.e., 0.83%/0.25%, and 2.06%/0.60%), as when the cohesion is ignored during design, the cohesion will still be present during construction and reduce the reinforcement loads and strains accordingly, as illustrated here. However, the final reinforcement strains and loads long-term will still be as designed with the cohesion ignored and will meet standards. The key is the effect that cohesion loss over time, if it occurs, will have on post-construction wall face deformation, and whether or not the wall, and whatever it supports, can successfully handle that post-construction deformation. Based on experience, a reinforcement strain increase of approximately 1 to 1.5% could result in a face deformation increase of approximately 1 inch for a 20 ft high wall.

Figure 15-E-18 provides plots that compare the strains that result for various assumptions regarding the short-term and long-term presence of cohesion. If the wall is designed considering this limited amount of cohesion (i.e., 0.20 ksf) and the absolute minimum creep stiffness needed to meet the design criteria, reinforcement strains quickly become excessive if that cohesion is lost over time post-construction (i.e., as high as 8.6% as shown in Table 15-E-15 and over 6% strain post-construction), and does not consider the effect of water build-up in the wall backfill due to reduced drainage characteristics (see Allen and Bathurst 2009 for an assessment of wall backfill water build-up on the probability of failure).

It is for this reason that completing the wall design taking into account the soil cohesion, which will result in a reduced reinforcement strength and stiffness, if backfill that has a small to moderate amount of cohesion is the only backfill available, **shall not** be done (i.e., for final wall design, always assume that $\Phi_c = 1.0$ whether or not some limited cohesion in the wall backfill is present). However, if a limited amount of cohesion is present in the backfill, the Stiffness Method may be used to assess how much post-construction strain in the reinforcement may occur if that cohesion disappears over time.

Table 15-E-15 Summary of Example 5 wall design calculations using Simplified Stiffness Method (Service and Strength Limit States).

a)	T_{max} Equation (Eq. 15-E-1) Parameters (including cohesion)												Unfactored maximum reinforcement load
Layer Number	**z (ft)**	**S_v (ft)**	**J_i (kips/ft)**	**S_{global} (ksf)**	**S_{local} (ksf)**	**D_{tmax}**	**F_f**	**Φ_g**	**Φ_{local}**	**Φ_{fb}**	**Φ_{fs}**	**Φ_c**	**T_{max} (kips/ft)**
10 (top)	1.33	2.33	8.5	6.82	3.65	0.220	N/A	0.217	0.73	1.0	1.0	0.292	0.017
9	3.33	2.00	8.5	6.82	4.25	0.372	N/A	0.217	0.78	1.0	1.0	0.292	0.027
8	5.33	2.00	8.5	6.82	4.25	0.523	N/A	0.217	0.78	1.0	1.0	0.292	0.038
7	7.33	2.00	8.5	6.82	4.25	0.674	N/A	0.217	0.78	1.0	1.0	0.292	0.049
6	9.33	2.00	17.0	6.82	8.50	0.825	N/A	0.217	1.11	1.0	1.0	0.292	0.085
5	11.33	2.00	17.0	6.82	8.50	0.976	N/A	0.217	1.11	1.0	1.0	0.292	0.101
4	13.33	2.00	17.0	6.82	8.50	1.00	N/A	0.217	1.11	1.0	1.0	0.292	0.103
3	15.33	2.00	17.0	6.82	8.50	1.00	N/A	0.217	1.11	1.0	1.0	0.292	0.103
2	17.33	2.00	17.0	6.82	8.50	1.00	N/A	0.217	1.11	1.0	1.0	0.292	0.103
1	19.33	1.67	17.0	6.82	10.2	1.00	N/A	0.217	1.21	1.0	1.0	0.292	0.094
Base of wall	20												$\overline{T}_{max}$ = 0.72

b)		Unfactored T_{max} (kips/ft) (Eq. 15-E-1)		Factored ε_{rein} (%)		Unfactored T_{max} (kips/ft) (Eq. 15-E-1)		Factored ε_{rein} (%)	
		Wall Designed for ϕ = 34°		Wall Designed for ϕ = 34°		Wall Designed for ϕ = 34° and c = 0.2 ksf*		Wall Designed for ϕ = 34° and c = 0.2 ksf*	
Layer Number	**z (ft)**	**Not Accounting for Cohesion (as Designed in Example 1)**	**Accounting for Cohesion, c = 0.2 ksf**	**Not Accounting for Cohesion (as Designed in Example 1)**	**Accounting for Cohesion, c = 0.2 ksf**	***Accounting for Cohesion in Final Design**	***+Cohesion Lost**	***Accounting for Cohesion in Final Design**	***+Cohesion Lost**
Column→	1	2	3	4	5	6	7	8	9
10 (top)	1.33	0.060	0.017	0.83	0.25	0.015	0.051	0.60	2.04
9	3.33	0.093	0.027	1.30	0.38	0.023	0.080	0.93	3.19
8	5.33	0.131	0.038	1.85	0.54	0.033	0.112	1.31	4.49
7	7.33	0.168	0.049	2.38	0.69	0.042	0.145	1.69	5.78
6	9.33	0.292	0.085	2.06	0.60	0.052	0.177	2.07	7.08
5	11.33	0.345	0.101	2.44	0.71	0.061	0.209	2.45	8.38
4	13.33	0.354	0.103	2.50	0.73	0.063	0.215	2.51	8.59
3	15.33	0.354	0.103	2.50	0.73	0.063	0.215	2.51	8.59
2	17.33	0.354	0.103	2.50	0.73	0.063	0.215	2.51	8.59
1	19.33	0.323	0.094	2.28	0.67	0.057	0.196	2.29	7.85
Base of wall	20	$\overline{T}_{max}$ = 2.47	$\overline{T}_{max}$ = 0.72	ε_{ave} = 2.06	ε_{ave} = 0.60	$\overline{T}_{max}$ = 0.47	$\overline{T}_{max}$ = 1.61	ε_{ave} = 1.89	ε_{ave} = 6.46

*Using minimum creep stiffness of 3.0 kips/ft for all layers, which is well below the minimum stiffness available of 8.2 kips/ft. However, this is for illustration purposes only, and not recommended for design.

+Cohesion is lost over time due to softening of the backfill due to moisture increase, or, in the case of apparent cohesion, due to backfill moisture content changes, over time.

Figure 15-E-18 Comparison of Stiffness Method predicted factored reinforcement strains for wrapped face (flexible) wall with some soil cohesion (Example 5): (a) designed assuming cohesion is not present (i.e., ϕ = 34° and c = o; same as Example 1), (b) designed assuming cohesion is present (i.e., ϕ = 34° and c = 0.2 ksf).

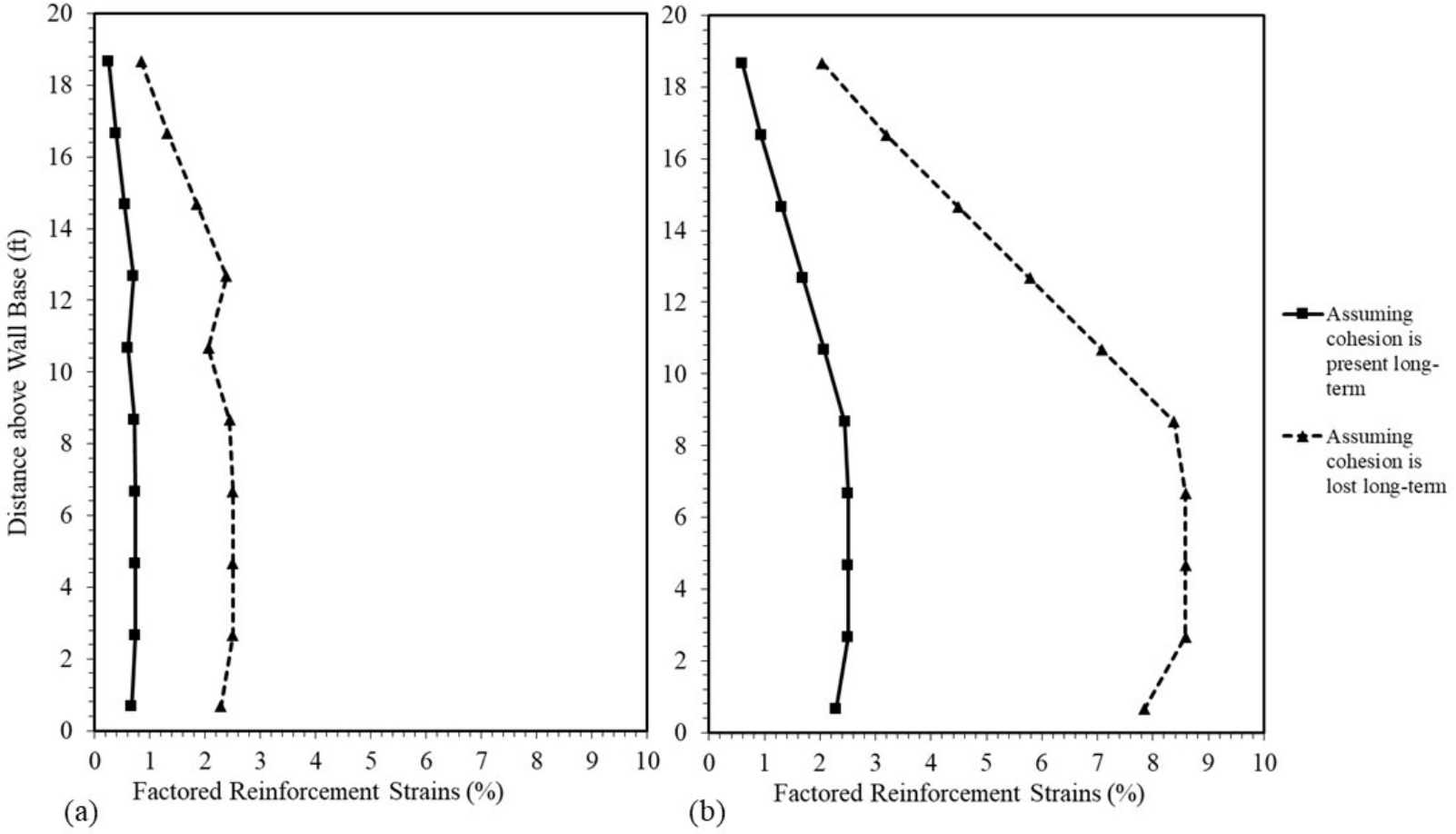

15-E-10 Summary of Lessons Learned from Design Examples

The provided design examples illustrate the use of the Stiffness Method for several geosynthetic wall design scenarios. These scenarios include flexible and stiff facings, and for the stiff faced walls, mechanical (i.e., structural) and friction dominated facing/reinforcement connections, coverage ratios ranging from 0.9 to 1.0, and cohesionless and cohesive soil backfills. Designs are carried out using both the Stiffness Method and the Simplified Method. Designs were carried out for internal stability (soil failure, reinforcement and connection rupture, and pullout) considering Service, Strength, and Extreme Event I (seismic) limit states.

Lessons learned from these examples are as follows:

- In all cases, for the Stiffness Method designs, the Soil Failure Limit controlled the amount and strength of reinforcements needed. However, for Example 4 (i.e., the block faced wall with frictional facing reinforcement connections), since it represented a hypothetical proprietary wall system, the minimum strength geogrid available for the system was stronger than the strength required to meet the soil failure limit state.
- For Example 1 (i.e., the flexible faced wall), the difference between the Stiffness and Simplified method designs was the least of all the examples (i.e., total T_{al} for wall section of 10.6 kips/ft for the Stiffness Method and 11.9 kips/ft for the Simplified Method). The Stiffness Method, however, required less reinforcement in the lower half of the wall and more reinforcement in the upper half of the wall relative to the Simplified Method distribution of reinforcement strength. Example 4 (block faced wall with primarily frictional facing/reinforcement connections) had the largest difference in the Stiffness and Simplified method designs regarding the total reinforcement strength T_{al} needed (i.e., total T_{al} needed for wall section of 16.1 kips/ft for the Stiffness Method and 30.1 kips/ft for the Simplified Method).
- The main reason for the larger difference in total T_{al} needed between the methods for Example 4 was due to the connection strength design for the Simplified Method, especially for seismic loading. This was mainly due to the fact that the Stiffness Method predicts a significantly lower reinforcement load (i.e., T_{max} and T_0) than does the Simplified Method due to the greater prediction accuracy of the Stiffness Method.
- Comparison of examples 1 and 2 can be used to assess the effect of facing stiffness on the magnitude of the total T_{al} needed for the wall design using the Stiffness Method. For the flexible faced wall (Example 1), the total T_{al} needed was 10.6 kips/ft, whereas for the comparable stiff (i.e., block) faced wall (Example 2), the total T_{al} needed was 9.4 kips/ft. The main reason for the difference was the reduction in T_{max} resulting from the facing stiffness and its effect on the strength required to meet the soil failure limit state requirements. Had the connection strength controlled the Stiffness Method design, the difference between the flexible and stiff faced wall examples would have varied depending on the efficiency of the connection.

- Example 5 was used to demonstrate the effect soil cohesion can have on the predicted reinforcement loads and strains when using the Stiffness Method. Even a small amount of cohesion (i.e., 0.2 ksf) can have a big effect on the predicted reinforcement load, and the amount of soil reinforcement needed. In general, backfill soil with clayey fines should be avoided. Based on this example, provided the backfill cohesion is small, ignoring the contribution of the soil cohesion to the soil shear strength used for design will result in a wall design with minimal risk of poor performance provided the fines content is not too high and good drainage is provided. However, it must be recognized that the reinforcement loads at end of wall construction will be reduced due to the cohesion whether or not the cohesion is ignored for the wall design. In this case, the effect of potential loss of soil cohesion due to longer term soil moisture content changes on reinforcement load and wall face deformation changes after wall construction could be investigated using the Stiffness Method. However, the final wall design should not be conducted taking advantage of the reduced reinforcement loads due to soil cohesion, as post-construction changes in the reinforcement loads and wall face deformation are likely to be unacceptable.

15-E-11 References

AASHTO (2020). *AASHTO LRFD Bridge Design Specifications*. American Association of State Highway and Transportation Officials, Ninth Edition, Washington, D.C., USA.

AASHTO (2015). Standard Practice for Determination of Long-Term Strength for Geosynthetic Reinforcement, Standard Practice R 69-15, 46 p.

Allen, T. M, and Bathurst, R. J. (2009), "Reliability of Geosynthetic Wall Designs and Factors Influencing Wall Performance," 4th International GSI-Taiwan Geosynthetics Conference, Pingtung, Taiwan, pp. 95-123.

Allen, T.M. and Bathurst, R.J. (2013). Comparison of working stress and limit equilibrium behavior of reinforced soil walls. *ASCE Geotechnical Special Publication No. 230, "Sound Geotechnical Research to Practice"* Honoring Robert D, Holtz II, (Stuedlein, A.W. and Christopher, B.R., editors), pp. 500-514.

Allen, T.M. and Bathurst, R.J. (2015). Improved simplified method for prediction of loads in reinforced soil walls. *ASCE Journal of Geotechnical and Geoenvironmental Engineering*, 141(11): 04015049.

Allen, T.M. and Bathurst, R.J. 2018. Application of the Simplified Stiffness Method to design of reinforced soil walls. *ASCE Journal of Geotechnical and Geoenvironmental Engineering*, 144(5): 04018024.

Allen, T.M. and Bathurst, R.J. 2019. "Geosynthetic reinforcement stiffness characterization for MSE wall design." Geosynthetics International 26(6): pp. 592–610 (https://dx.doi.org/10.1680/jgein.19.00041).

Allen, T.M., Bathurst, R.J., Holtz, R.D., Walters, D.L. and Lee, W.F. (2003). A new working stress method for prediction of reinforcement loads in geosynthetic walls. *Canadian Geotechnical Journal*, 40(5): 976-994.

ASTM D4595-17. Standard Test Method for Tensile Properties of Geotextiles by the Wide-Width Strip Method. ASTM International, West Conshohocken, PA, USA.

ASTM D6637 / D6637M-15. Standard Test Method for Determining Tensile Properties of Geogrids by the Single or Multi-Rib Tensile Method. ASTM International, West Conshohocken, PA, USA.

ASTM D6638 (2011). Standard Test Method for Determining Connection Strength Between Geosynthetic Reinforcement and Segmental Concrete Units (Modular Concrete Blocks). Standard D6638, 7 p.

Bathurst, R.J. and Simac, M.R. (1993). Laboratory testing of modular unit-geogrid facing connections. STP 1190 Geosynthetic Soil Reinforcement Testing Procedures (S.C.J. Cheng, ed.), American Society for Testing and Materials (Special Technical Publication), pp. 32-48.

NTPEP (2019). AASHTO National Transportation Product Evaluation Program (NTPEP) DataMine – Geosynthetic Reinforcement (REGEO). American Association of State Highway and Transportation Officials (AASHTO), Washington, DC, USA. See "https://data.ntpep.org/REGEO/Products" https://data.

Appendix 15-F Description of Typical Temporary Shoring Systems and Selection Considerations

15-F-1 Fill Applications

While most temporary retaining systems are used in cut applications, some temporary retaining systems are also used in fill applications. Typical examples include the use of MSE walls to support preload fills that might otherwise encroach into a wetland or other sensitive area, the use of modular block walls or wrapped face geosynthetic walls to support temporary access road embankments or ramps, and the use of temporary wrapped face geosynthetic walls to support fills during intermediate construction stages.

MSE walls, including wrapped face geosynthetic walls, are well suited for the support of preload fills because they can be constructed quickly, are relatively inexpensive, are suitable for retaining tall fill embankments, and can tolerate significant settlements. Modular block walls without soil reinforcement (e.g., ecology block walls) are also easy to construct and relatively inexpensive; however they should only be used to support relatively short fill embankments and are less tolerant to settlement than MSE walls. Therefore, block walls are better suited to areas with firm subgrade soils where the retained fill thickness behind the walls is less than 15 feet.

15-F-2 MSE Walls

MSE walls are described briefly in Section 15.5.3, and extensively in Publication No. FHWA-NHI-00-043 (Elias, et al., 2001). In general, MSE walls consist of strips or sheets of steel or polymeric reinforcement placed as layers in backfill material and attached to a facing. Facings may consist of concrete blocks or panels, gabions, or a continuation of the reinforcement layer.

15-F-3 Prefabricated Modular Block Walls

Prefabricated modular block walls without soil reinforcement are discussed in Section 15.5.4 and should be designed as gravity retaining structures. Concrete blocks used for gravity walls typically consist of 2½- by 2½- by 5-foot solid rectangular concrete blocks designed to interlock with each other. They are typically cast from excess concrete at concrete batch plants and are relatively inexpensive. Because of their rectangular shape they can be stacked a variety of ways. Because of the tightly fitted configuration of a concrete block wall, oversized blocks will tend to fit together poorly. Occasionally, blocks from a concrete batch plant are found to vary in dimension by several inches.

15-F-4 Common Cut Applications

A wide range of temporary shoring systems are available for cut applications. Each temporary shoring system has advantages and disadvantages, conditions where the system is suitable or not suitable, and specific design considerations. The following sections provide a brief overview of many common temporary shoring systems for cut applications. The “Handbook of Temporary Structures in Construction” (Ratay, 1996) is another useful resource for information on the design and construction of temporary shoring systems.

15-F-5 Trench Boxes

Trench boxes are routinely used to protect workers during installation of utilities and other construction operations requiring access to excavations deeper than 4 feet. Trench boxes consist of two shields connected by internal braces and have a fixed width and height. The typical construction sequence consists of excavation of a trench and then setting the trench box into the excavation prior to allowing workers to gain access to the protected area within the trench box. For utility construction, the trench box is commonly pulled along the excavation by the excavator as the utility construction advances. Some trench boxes are designed such that the trench boxes can be stacked for deeper excavations.

The primary advantage of trench boxes is that they provide protection to workers for a low cost and no site specific design is generally required. Another advantage is that trench boxes are readily available and are easy to use. One disadvantage of trench boxes is that no support is provided to the soils—where existing improvements are located adjacent to the excavation, damage may result if the soils cave-in towards the trench box. Therefore, trench boxes are not suitable for soils that are too weak or soft to temporarily support themselves. Another disadvantage of trench boxes is the internal braces extend across the excavation and can impede access to the excavation. Finally, trench boxes provide no cutoff for groundwater; thus, a temporary dewatering system may be necessary for excavations that extend below the water table for trench boxes to be effective.

Trench boxes are most suitable for trenches or other excavations where the depth is greater than the width of the excavation and soil is present on both sides of the trench boxes. Trench boxes are not appropriate for excavations that are deeper than the trench box.

15-F-6 Sheet Piling

Sheet piling is a common temporary shoring system in cut applications and is particularly beneficial as the sheet piles can act as a diaphragm wall to reduce groundwater seepage into the excavation. Sheet piling typically consists of interlocking steel sheets that are much longer than they are wide. Sheets can also be constructed out of vinyl, aluminum, concrete, or wood; however, steel sheet piling is used most often due to its ability to withstand driving stresses and its ability to be removed and reused for other walls. Sheet piling is typically installed by driving with a vibratory pile driving hammer. For sheet piling in cut applications, the piling is installed first, then the soil in front of the wall is excavated or dredged to the design elevation. There are two general types of sheet pile walls: cantilever, and anchored/braced.

Sheet piling is most often used in waterfront construction; although, sheet piling can be used for many upland applications. One of the primary advantages of sheet piling is that it can provide a cutoff for groundwater flow and the piles can be installed without lowering the groundwater table. Another advantage of sheet piling is that it can be used for irregularly shaped excavations. The ability for the sheet piling to be removed makes sheet piling an attractive shoring alternative for temporary applications. The ability for sheet piling to be anchored by means of ground anchors or deadman anchors (or braced internally) allows sheet piling to be used where deeper excavations are planned or where large surcharge loading is present. One disadvantage of sheet piling is that it is installed by vibrating or driving; thus, in areas where vibration sensitive improvements or soils are

present, sheet piling may not be appropriate. Another disadvantage is that where very dense soils are present or where cobbles, boulders or other obstructions are present, installation of the sheets is difficult.

15-F-7 Soldier Piles

Soldier pile walls are frequently used as temporary shoring in cut applications. The ability for soldier piles to withstand large lateral earth pressures and the proven use adjacent to sensitive infrastructure make soldier piles an attractive shoring alternative. Soldier pile walls typically consist of steel beams installed in drilled shafts; although, drilled shafts filled with steel cages and concrete or precast reinforced concrete beams can be used. Following installation of the steel beam, the shaft is filled with structural concrete, lean concrete, or a combination of the two. The soldier piles are typically spaced 6 to 8 feet on center. As the soil is excavated from in front of the soldier piles, lagging is installed to retain the soils located between adjacent soldier piles. The lagging typically consists of timber; however, reinforced concrete beams, reinforced shotcrete, or steel plates can also be used as lagging. Ground anchors, internal bracing, rakers, or deadman anchors can be incorporated in soldier pile walls where the wall height is higher than about 12 feet, or where backslopes or surcharge loading are present.

Soldier piles are an effective temporary shoring alternative for a variety of soil conditions and for a wide range of wall heights. Soldier piles are particularly effective adjacent to existing improvements that are sensitive to settlement, vibration, or lateral movement. Construction of soldier pile walls is more difficult in soils prone to caving, running sands, or where cobbles, boulders or other obstructions are present; however, construction techniques are available to deal with nearly all soil conditions. The cost of soldier pile walls is higher than some temporary shoring alternatives. In most instances, the steel soldier pile is left in place following construction. Where ground anchors or deadman anchors are used, easements may be required if the anchors extend outside the right-of-way/property boundary. Where ground anchors are used and soft soils are present below the base of the excavation, the toe of the soldier pile should be designed to prevent excessive settlements.

15-F-8 Prefabricated Modular Block Walls

In general, modular blocks (see Section 15.6.6.1.2) for cut applications require the soil deposit to have adequate standup time such that the excavation can be made and the blocks placed without excessive caving. Otherwise large temporary backcuts and subsequent backfill placement may be required. A key advantage to modular block walls is that the blocks can be removed and reused after the temporary structure is no longer needed. One disadvantage to using modular blocks in cut applications is that the blocks are placed in front of an excavation and the soils are initially not in full contact with the blocks unless the areas is backfilled. Some movement of the soil mass is required prior to load being applied to the blocks—this movement can be potentially damaging to upslope improvements.

15-F-9 Braced Cuts

Braced cuts are used in applications where a temporary excavation is required that provides support to the retained soils in order to reduce excessive settlement or lateral movement of the retained soils. Braced cuts are generally used for trenches or other excavations where soil is present on both sides of the excavation and construction activities are not affected by the presence of struts extending across the excavation. A variety of techniques are available for constructing braced cuts; however, most include a vertical element, such as a sheet pile, metal plate, or a soldier pile, that is braced across the excavation by means of struts. Many of the considerations discussed below for soldier pile walls and sheet piling apply to braced cuts.

15-F-10 Soil Nail Walls

The soil nail wall system consists of drilling and grouting rows of steel bars or "nails" behind the excavation face as it is excavated and then covering the face with reinforced shotcrete. The placement of soil nails reinforces the soils located behind the excavation face and increases the soil's ability to resist a mass of soil from sliding into the excavation. Soil nail walls are typically used in dense to very dense granular soils or stiff to hard, low plasticity, fine-grained soils. Soil nail walls are less cost effective in loose to medium dense sands or soft to medium stiff/high plasticity fine-grained soils.

The soils typically are required to have an adequate standup time (to allow placement of the steel wire mesh and/or reinforcing bars to be installed and the shotcrete to be placed). Soils that have short standup times are problematic for soil nailing. Many techniques are available for mitigating short standup time, such as installation of vertical elements (vertical soil nails or light steel beams set in vertical drilled shafts placed several feet on center along the perimeter of the excavation), drilling soil nails through soil berms, use of slot cuts, and flash-coating with shotcrete. Easements may be required if the soil nails extend outside the right-of-way/property boundary.

15-F-11 Uncommon Shoring Systems for Cut Applications

The following shoring systems require special, very detailed, expert implementation:

15-F-11.1 Diaphragm/Slurry Walls

Diaphragm/slurry walls are constructed by excavating a deep trench around the proposed excavation. The trench is filled with a weighted slurry that keeps the excavation open. The width of the trench is at least as wide as the concrete wall to be constructed. The slurry trench is completed by installing steel reinforcement cages and backfilling the trench with tremied structural concrete that displaces the slurry. The net result is a continuous wall that significantly reduces horizontal ground water flow. Once the concrete cures, the soil is excavated from in front of the slurry wall. Internal bracing and/or ground anchors can be incorporated into slurry walls. Diaphragm/slurry walls can be incorporated into a structure as permanent walls.

Diaphragm/slurry walls are most often used where groundwater is present above the base of the excavation. Slurry walls are also effective where contaminated groundwater is to be contained. Slurry walls can be constructed in dense soils where the use of sheet piling is difficult. Other advantages of slurry walls include the ability to withstand significant

vertical and lateral loads, low construction vibrations, and the ability to construct slurry walls in low-headroom conditions. Slurry walls are particularly effective in soils where high groundwater and loose soils are present, and dewatering could lead to settlement related damage of adjacent improvements, assuming that the soils are not so loose or soft that the slurry is inadequate to prevent squeezing of the very soft soil.

In addition to detailed geotechnical design information, diaphragm/slurry walls require jobsite planning, preparation and control of the slurry, and contractors experienced in construction of slurry walls. For watertight applications, special design and construction considerations are required at the joints between each panel of the slurry wall.

15-F-11.2 Secant Pile Walls

Secant pile walls are another type of diaphragm wall that consist of interconnected drilled shafts. First, every other drilled shaft is drilled and backfilled with low strength concrete without steel reinforcement. Next, structural drilled shafts are installed between the low strength shafts in a manner that the structural shafts overlap the low strength shafts. The structural shafts are typically backfilled with structural concrete and steel reinforcement. The net result is a continuous wall that significantly reduces horizontal ground water flow while retaining soils behind the wall.

Secant pile walls are typically more expensive than many types of cut application temporary shoring alternatives; thus, the use of secant pile walls is limited to situations where secant pile walls are better suited to the site conditions than other shoring alternatives. Conditions where secant pile walls may be more favorable include high groundwater, the need to prevent migration of contaminated groundwater, sites where dewatering may induce settlements below adjacent improvements, sites with soils containing obstructions, and sites where vibrations need to be minimized.

15-F-11.3 Cellular Cofferdams

Sheet pile cellular cofferdams can be used for applications where internal bracing is not desirable due to interference with construction activities within the excavation. Cellular cofferdams are typically used where a dewatered work area or excavation is necessary in open water or where large dewatered heads are required. Cellular cofferdams consist of interlocking steel sheet piles constructed in a circle, or cell. The individual cells are constructed some distance apart along the length of the excavation or area to be dewatered. Each individual cell is joined to adjacent cells by arcs of sheet piles, thus providing a continuous structure. The cells are then filled with soil fill, typically granular fill that can be densified. The resulting structure is a gravity wall that can resist the hydrostatic and lateral earth pressures once the area within the cellular cofferdam is dewatered or excavated. As a gravity structure, cellular cofferdams need adequate bearing; therefore, sites where the cellular cofferdam can be founded on rock or dense soil are most suitable for these structures.

Cellular cofferdams are difficult to construct and require accurate placement of the interlocking sheet piles. Sites that require installation of sheet piles through difficult soils, such as through cobbles or boulders are problematic for cellular cofferdams and can result in driving the sheets out of interlock.

15-F-11.4 Frozen Soil Walls (Ground Freezing)

Frozen soil walls can be used for a variety of temporary shoring applications including construction of deep vertical shafts and tunneling. Frozen soil walls are typically used where conventional shoring alternatives are not feasible or have not been successful. Frozen soil walls can be constructed as gravity structures or as compressive rings. Ground freezing also provides an effective means of cutting of groundwater flows. Frozen soil has compressive strengths similar to concrete. Installation of a frozen soil wall can be completed with little vibration and can be completed around existing utilities or other infrastructure. Ground freezing is typically completed by installing rows of steel freeze pipes along the perimeter of the planned excavation. Refrigerated fluid is then circulated through the pipes at temperatures typically around -20°C to -30°C. Frozen soil forms around each freeze pipe until a continuous mass of frozen soil is present. Once the frozen soil reaches the design thickness, excavation can commence within the frozen soil.

Frozen soil walls can be completed in difficult soil and groundwater conditions where other shoring alternatives are not feasible. Frozen soil walls can provide an effective cutoff for groundwater and are well suited for containment of contaminated groundwater. Frozen soil walls are problematic in soils with rapid groundwater flows, such as coarse sands or gravels, due to the difficulty in freezing the soil. Flooding is also problematic to frozen soil walls where the flood waters come in contact with the frozen soil—a condition which can lead to failure of the shoring. Special care is required where penetrations are planned through frozen soil walls to prevent groundwater flows from flooding the excavation. Accurate installation of freeze pipes is required for deeper excavations to prevent windows of unfrozen soil. Furthermore, ground freezing can result in significant subsidence as the frozen ground thaws. If settlement sensitive structures are below or adjacent to ground that is to be frozen, alternative shoring means should be selected.

15-F-11.5 Deep Soil Mixing

Deep soil mixing (DSM) is an in-situ soil improvement technique used to improve the strength characteristics of panels or columns of native soils. DSM utilizes mixing shafts suspended from a crane to mix cement into the native soils. The result is soil mixed panels or columns of improved soils. Two types of DSM walls can be constructed: gravity walls and diaphragm-type walls. Gravity type DSM walls consist of columns or panels of improved soils configured in a pattern capable of resisting movement of soil into the excavation. Diaphragm-type DSM walls are constructed by improving the soil along the perimeter of the excavation and inserting vertical reinforcement into the improved soil immediately after mixing cement into the soil. The result is a low permeability structural wall that can be anchored with tiebacks, similar to a soldier pile wall, where the improved soil acts as the lagging.

Advantages with deep soil mixing gravity walls include the use of the native soils as part of the shoring system and reduced or no reinforcement. However, a significant volume of the native soils needs to be improved over a wide area to enable the improved soil to act as a gravity structure. Advantages with soil mixed diaphragm walls include the ability to control groundwater seepage, construction of the wall facing simultaneously with placement of steel soldier piles, and a thinner zone of improved soils compared to gravity DSM walls.

DSM walls can be installed top-down by wet methods where mechanical mixing systems combine soil with a cementitious slurry or through bottom up dry soil mixing where mechanical mixing systems mix pre-sheared soil with pneumatically injected cement or lime. DSM is generally appropriate for any soil that is free of boulders or other obstructions; although, it may not be appropriate for highly organic soils. DSM can be completed in very soft to stiff cohesive soils and very loose to medium dense granular soils.

15-F-11.6 Permeation Grouting

Permeation grouting involves the pressurized injection of a fluid grout to improve the strength of the in-situ soils and to reduce the soil's permeability. A variety of grouts are available—micro-fine cement grout and sodium silicate grout are two of the more frequently used types in permeation grouting. To be effective, the grout must be able to penetrate the soil; therefore, permeation grouting is not applicable in cohesive soils or granular soils with more than about 20 percent fines. Disadvantages of permeation grouting is the expense of the process and the high risk of difficulties. Permeation grouting, like ground freezing or jet grouting, can be used to create gravity retaining walls consisting of improved soils or can be used to create compression rings for access shafts or other circular excavations.

In addition to characterizing the soils gradation and stratigraphy, it is important to characterize the permeability of the soils to evaluate the suitability of permeation grouting.

15-F-11.7 Jet Grouting

Jet grouting is a ground improvement technique that can be used to construct temporary shoring walls and groundwater cutoff walls. Jet grouting can also be used to form a seal or strut at the base of an excavation. Jet grouting is an erosion based technology where high velocity fluids are injected into the soil formation to break down the soil structure and to mix the soil with a cementitious slurry to form columns of improved soil. Jet grouting can be used to construct diaphragm walls to cutoff groundwater flow and can be configured to construct gravity type shoring systems or compressive rings for circular shafts. Jet grouting is applicable to most soil conditions; however, high plasticity clays or stiff to hard cohesive soils are problematic for jet grouting.

Advantages with jet grouting include the ability to use of the native soils as part of the shoring system. A significant volume of the native soils needs to be improved over a wide area to enable the improved soil to act as a gravity structure. The width of the improved soil column is difficult to control, thus the final face of a temporary shoring wall may be irregular or protrude into the excavation.

15-F-12 Factors Influencing Choice of Temporary Shoring

A multitude of factors will influence the choice of temporary shoring systems for a particular application. The most common considerations are cost, subsurface constraints (i.e. difficult driving conditions, the need to cutoff groundwater seepage, etc.), site constraints (i.e. limited access, impacts to adjacent infrastructure, etc.), and local practice. The sections below, while not all-inclusive, provide a brief discussion of several of the factors that influence selection of temporary shoring systems.

15-F-12.1 Application

The first screening criteria for alternative temporary shoring options will be the purpose of the shoring—will it retain an excavation or support a fill.

15-F-12.2 Cut/fill Height

Some retaining systems are more suitable for supporting deep excavations/fill thicknesses than others. Temporary modular block walls are typically suitable only for relatively short fill embankments (less than 15 feet), while MSE walls can be designed to retain fills several tens of feet thick.

In cut applications, the common cantilever retaining systems (sheet piling and soldier piles) are typically most cost effective for retained soil heights of 12 to 15 feet or less. Temporary shoring walls in excess of 15 feet typically require bracing, either external (struts, rakers, etc.) or internal (ground anchors or dead-man anchors).

15-F-13 Soil Conditions

15-F-13.1 Dense Soils and Obstructions

Dense subsurface conditions, such as presented by glacial till or bedrock, result in difficult installation conditions for temporary shoring systems that are typically driven or vibrated into place (sheet piling). Cobbles, boulders and debris within the soil also often present difficult driving conditions. It is often easier to use drilling methods to install shoring in these conditions. However, oversize materials and dense conditions may also hinder conventional auger drilling, resulting in the need for specialized drilling equipment. Methods such as slurry trenches and grouting may become viable in areas with very difficult driving and drilling conditions.

15-F-13.2 Caving Conditions

Caving conditions caused by a combination of relatively loose cohesionless soils and/or groundwater seepage may result in difficult drilling conditions and the need to use casing and/or drilling slurry to keep the holes open.

15-F-13.3 Permeability

Soil permeability is based primarily on the soil grain size distribution and density. It influences how readily groundwater flows through a soil. If soils are very permeable and the excavation will be below the water level, then some sort of groundwater control will be required as part of the shoring system; this could consist of traditional dewatering methods or the use of shoring systems that also function as a barrier to seepage, such as sheet piling and slurry trench methods.

15-F-13.4 Groundwater, Bottom Heave and Piping

The groundwater level with respect to the proposed excavation depth will have a substantial influence on the temporary shoring system selected. Excavations that extend below the groundwater table and that are underlain by relatively permeable soils will require either dewatering, shoring systems that also function as a barrier to groundwater seepage, or some combination thereof. If the anticipated dewatering volumes are high,

issues associated with treating and discharge of the effluent can be problematic. Likewise, large dewatering efforts can cause settlement of nearby structures if they are situated over compressible soils, or they may impact nearby contamination plumes, should they exist. Considerations for barrier systems include the depth to an aquitard to seal off groundwater flow and estimated flow velocities. If groundwater velocity is high, some barrier systems such as frozen ground and permeation grouting will not be suitable.

Bottom heave and piping can occur in soft/loose soils when the hydrostatic pressure below the base of the excavation is significantly greater than the resistance provided by the floor soils. In this case, temporary shoring systems that can be used to create a seepage barrier below the excavation, thus increasing the flow path and reducing the hydrostatic pressure below the base, may be better suited than those that do not function as a barrier. For example, sheet piling can be installed as a seepage barrier well below the base of the excavation, while soldier pile systems cannot. This is especially true if an aquitard is situated below the base of the excavation where the sheet piles can be embedded into the aquitard to seal off the groundwater flow path.

15-F-13.5 High Locked in Lateral Stresses

Glacially consolidated soils, especially fine-grained soils, often have high locked in lateral stresses because of the overconsolidation process (i.e. Ko can be much greater than a typical normally consolidated soil deposit). The Seattle Clay is an example of this type of soil, and much has been written about the performance of cuts into this material made to construct Interstate 5 (Peck, 1963; Sherif, 1966; Andrews, et al., 1966; and Strazer, et al., 1974). When cuts are made into soils with high locked in lateral stresses, they tend to rebound upon the stress relief, which can open up joints and fractures. Hydrostatic pressure buildup in the joints and fractures can function as a hydraulic jack and move blocks of soil, and movement can quickly degrade the shear strength of the soil. Therefore, for excavations into virgin material suspected of having high locked in lateral stresses, temporary shoring methods that limit the initial elastic rebound are required. For example, anchored shoring systems that are loaded and locked-off before the excavation will likely perform better than passive systems that allow the soil move, such as soil nails.

15-F-13.6 Compressible Soils

Compressible soils are more likely to impact the selection of temporary walls used to retain fills. MSE walls are typically more settlement tolerant than other fill walls, such as modular block walls.

15-F-13.7 Space Limitations

Space limitations include external constraints, such as right-of-way issues and adjacent structures, and internal constraints such as the amount of working space required. If excavations are required near existing right-of-ways, then temporary construction easements may be required to install the shoring system. Permanent easements may be required if the shoring systems include support from ground anchors or dead-man anchors that may remain after construction is complete. To minimize the need for temporary and permanent easements, cantilever walls or walls with external bracing (e.g. struts or rakers) should be considered. However, if the work space in front of the excavation needs to be clear, then shoring systems with external support may not be appropriate.

Existing infrastructure, such as underground utilities that cannot be relocated, may have the same impact on the choice of temporary shoring system as nearby right-of-ways.

15-F-13.8 Adjacent Infrastructure

The location of infrastructure adjacent to the site and the sensitivity of the infrastructure to settlement and/or vibrations will influence the selection of temporary shoring. For example, it may be necessary to limit dewatering or incorporate recharge wells if the site soils are susceptible to consolidation if the water table is lowered. If the adjacent infrastructure is brittle or supported above potentially liquefiable soils, it may be necessary to limit vibrations, which may exclude the selection of temporary shoring systems that are driven or vibrated into place, such as sheet piling.

The shoring system itself could also be sensitive to adjacent soil improvement or foundation installation activities. For example, soil improvement activities such as the installation of stone columns in loose to medium dense sands immediately in front of a shoring structure could cause subsidence of the loose sands and movement, or even failure, of the shoring wall. In such cases, the shoring wall shall be designed assuming that the soil immediately in front of the wall could displace significantly, requiring that the wall embedment be deepened and ground anchors be added.

15-F-14 References

Andrews, G., Squier, L., and Klassel, J., (1966) “Cylinder Pile Retaining Walls,” Paper No. 295, Proceedings: ASCE Structural Conference; Miami, Florida, January 31, - February 4, 1966.

Elias, V., and Christopher, B.R., and Berg, R. R., 2001, Mechanically Stabilized Earth Walls and Reinforced Soil Slopes - Design and Construction Guidelines, No. FHWA- NHI-00-043, Federal Highway Administration, 394 pp.

Peck, R., (1963) “Report on Evaluation of Stability Problems, Seattle Freeway South of Olive Way”, Report to U.S. Bureau of Public Roads, July 1963.

Ratay, R., (1996) Handbook of Temporary Structures in Construction; Engineering Standards, Designs, Practices and Procedures (Second Edition), McGraw-Hill, pp.

Sherif, M., (1966) “Physical Properties of Seattle Freeway Soils,” Contract No. GC- 1530, Engineering Report No. 2, Prepared for Washington State Highway Department Division of Materials and Research.

Strazer, R., Bestwick, K., and Wilson, S., (1974) “Design Considerations for Deep Retained Excavations in Over-Consolidated Seattle Clays,” Association of Engineering Geology, Vol. XI, No. 4.

Appendix 15-G Testing and Acceptance Protocols for Tiebacks in Clay

Testing and Acceptance for Tiebacks Installed in Clay

The contents for this appendix are based on Allen (2020).

For tiebacks installed in intact glacially overconsolidated clay, paleolandslide deposits derived from the glacially overconsolidated clay, or otherwise disturbed glacial clay, a project specific protocol for tieback bond zone design, testing, and acceptance shall consist of the following:

- **Sacrificial pullout and sacrificial pullout with creep tests conducted on tiebacks in each soil unit in which tieback bond zones will be installed:**
  - To be able to extrapolate the pullout test results to longer bond zones, a minimum bond zone length of 4.6 m (15 ft) should be used for the test tiebacks to minimize the effect of load transfer rate nonlinearity along the bond zone soil-grout interface.
  - The testing protocol and analysis should be consistent with the protocol used for long-term tieback testing.
  - The pullout tests should be done in pairs. The first test is used to establish the values of T_c and T_{uw} that will be used for the second pullout test, loading the tieback incrementally until pullout is achieved, if possible. The sacrificial tieback testing schedule for this testing is provided in Tables 15-G-1 and 15-G-2.
  - The loading increments should be based on the Factored Design Load (FDL), using a load increment of 0.10FDL to 0.20FDL. A load factor of 1.35, consistent with required load factors in AASHTO (2020), should be used to determine the FDL.
  - The second pullout test is also loaded incrementally until T_{uw} from the first test is achieved, at which point a 72-hour creep test is conducted. If in the second test the creep rate versus load level curve is starting to sweep upward sooner than expected, it may become necessary to use a lower value of T_{uw} for the 72-your load hold. In that case, the next increment of load increase above T_{uw} may need to start lower than shown in Table 15-G-2.
  - Once the creep test is completed for the second tieback, the tieback load is increased incrementally above T_{uw} until pullout is achieved, if possible.
  - At each load increment, the load level should be held for 60 minutes and creep measured.
- **Contractor designed tieback bond zone diameter and length:** The results from these sacrificial verification (pullout) tests described above, if they are successful, should be used to design the tieback bond zone length and diameter for the proposed production tieback installation method. To obtain the average bond zone soil-grout interface adhesion for the final design of the tieback bond zone, a resistance factor of 0.67 (i.e., the reciprocal of the safety factor, or 1/1.5 = 0.67) should be applied to T_{uw} determined from these pullout and extended creep tests. If the tiebacks are in disturbed glacially overconsolidated clay (e.g., paleolandslide or otherwise similar deposits), a resistance factor of 0.45 should be used to account for the increased variability of the deposit.

- **Production creep performance tests:** Five percent of the production tiebacks (or a minimum of 3 tiebacks per wall, whichever is greater) should be subjected to a creep performance test. The tieback testing schedule for this creep performance testing is provided Table 15-G-3.
- **Production cyclic performance tests, but with no longer-term creep testing:** Five percent of the production tiebacks (or a minimum of 3 tiebacks per wall, whichever is greater) should be subjected to a cyclic performance test. In cyclic performance tests the highest load tested is held for 60 minutes to determine the creep rate. The tieback testing schedule for this cyclic performance testing is provided Table 15-G-4.
- **Production proof tests conducted on all remaining tiebacks in each wall:** In proof tests the highest load tested is held for 60 minutes to determine the creep rate. The tieback testing schedule for proof testing is provided Table 15-G-5.

Table 15-G-1 Sacrificial pullout test schedule for tiebacks in glacial clay soil units (first test)

Load*	Hold Time (minutes)
AL	--
0.20 FDL	60
0.40 FDL	60
0.50 FDL	60
0.60 FDL	60
0.70 FDL	60
0.80 FDL	60
0.90 FDL	60
1.0 FDL	60
1.2 FDL	60
1.4 FDL	60
1.6 FDL	60
1.8 FDL	60
2.0 FDL	60

*FDL = Factored Design Load. Failure is defined as the tieback being unable to hold the load without continued movement (pullout).

Table 15-G-2 Sacrificial pullout test schedule for tiebacks in glacial clay soil units with 72-hour creep test (second test)

Load*	Hold Time (minutes)
AL	--
0.20 T_{uw}	60
0.40 T_{uw}	60
0.50 T_{uw}	60
0.60 T_{uw}	60
0.70 T_{uw}	60
0.80 T_{uw}	60
0.90 T_{uw}	60
T_{uw} from first test	4,320 (72 hrs)
1.2 FDL	60
1.4 FDL	60
1.6 FDL	60
1.8 FDL	60
2.0 FDL	60

*FDL = Factored Design Load. Failure is defined as the tieback being unable to hold the load without continued movement (pullout).

Table 15-G-3 Production tieback creep performance test schedule for tiebacks in glacial clay soil units

*Load	Hold Time (minutes)
AL	--
0.20 FDL	60
0.40 FDL	60
0.60 FDL	60
0.80 FDL	60
1.00 FDL	360 (6 hrs)

*Conduct on 5% of the production tiebacks in each wall, but no less than 3 tiebacks per wall.

Table 15-G-4 Production tieback cyclic performance test schedule for tiebacks in glacial clay soil units

[a]Load	Hold Time (minutes)
AL	--
0.25 FDL	--
AL	--
0.25 FDL	--
0.50 FDL	--
AL	--
0.25 FDL	--
0.50 FDL	--
0.75 FDL	--
AL	--
0.25 FDL	--
0.50 FDL	--
0.75 FDL	--
1.00 FDL	[b]60
AL	--
Jack to lock-off load	__--

[a]Conduct on 5% of the production tiebacks in each wall, but no less than 3 tiebacks per wall.

[b]If the anchor movement between 6 and 60 minutes exceeds 0.04 inches (0.03 inches for pressure- and post-grouted tiebacks), the maximum test load shall be held for an additional 300 minutes.

Table 15-G-5 Production tieback proof test schedule for tiebacks in glacial clay soil units

[a]Load	Hold Time (minutes)
AL	--
0.25 FDL	10
0.50 FDL	10
0.75 FDL	10
1.00 FDL	[b]60

[a]Conduct on all remaining production tiebacks in each wall.

[b]If the anchor movement between 6 and 60 minutes exceeds 0.04 inches (0.03 inches for pressure- and post-grouted tiebacks), the maximum test load shall be held for an additional 300 minutes.

Creep test measurement times and tieback acceptance criteria shall be as provided in Table 15-G-6 for tiebacks in clay.

Table 15-G-6 Creep measurement times and creep criteria for tiebacks in clay soil units

Hold Time (minutes)	Measurement Times (minutes)	Creep Criterion*
10	1, 2, 3, 4, 5, 6, and 10	0.75 mm/log cycle (0.03 inch per log cycle) of time
60	1, 2, 3, 4, 5, 6, 10, 20, 30, 40, 50, and 60	1.0 mm/log cycle (0.04 inch per log cycle) of time
360	1, 2, 3, 4, 5, 6, 10, 20, 30, 40, 50, 60, then every 30 minutes up to 360 minutes	1.0 mm/log cycle (0.04 inch per log cycle) of time
4320	1, 2, 3, 4, 5, 6, 10, 20, 30, 40, 50, 60, then every 30 minutes up to 4,320 minutes	+1.5 mm/log cycle (0.06 inch per log cycle) of time

*Adjust criterion based on test results from the sacrificial pullout tests, but no greater than shown in this table.

+Limit to 1.0 mm/log cycle (0.04 in./log cycle) of time if testing pressure- or post-grouted tiebacks.

Use slope of creep curve (i.e., such as from a log linear regression) to determine creep rate for comparison to the creep criterion.

Additional Implementation Requirements for Production Tieback Walls

Based on the results of this study, the following are recommendations that should be considered when developing tieback testing programs for production walls:

1. The special testing requirements provided in this appendix should be considered applicable to tiebacks installed in overconsolidated clays, both in an intact condition and in a disturbed condition (e.g., partially reconsolidated paleolandslide deposits such as the Vashon Unsorted), in the central Puget Sound region. This testing is especially important when, for the soil surrounding the tieback bond zones, the soil consistency index is less than 0.9 and the liquid limit is greater than 50, but should also be considered for any clayey silt, silty clay, or clay. See the report conclusions (Allen 2020) for guidance regarding the soil data requirements needed to make this assessment.
2. Two sacrificial pullout/creep test tiebacks should be installed in each clay unit; one sacrificial test is for pullout and the other is for pullout and creep testing (see Tables 15-G-1 and 15-G-2). The load zone should be in the target soil unit. The verification (pullout) tests must be performed prior to production tieback installation.
3. A minimum 15-foot-long bond length is required for the sacrificial verification test tiebacks. Additional tendon steel should be added to the test tiebacks to make sure the tieback can be loaded to at least twice the FDL and high enough to achieve pullout, if possible.
4. Except for the load-cycled performance tests, no load cycling is allowed for tiebacks in glacial clay units. No retesting is allowed for tiebacks in glacial clay units.
5. If the verification (pullout) test results indicate good creep performance at the 4,320-minute hold time, a creep criterion up to 0.06 inch per log cycle of time could be considered by the Engineer for straight shafted tiebacks. For pressure-grouted and post-grouted tiebacks, a creep criterion up to 0.04 inch per log cycle of time could be considered.

6. If a tieback fails in creep, lock off the load at 50% of the load at creep failure. Additional tiebacks may be required to achieve the wall design load resistance.
7. The sacrificial verification test load-hold periods shall start as soon as the test load is applied and the anchor movement, with respect to a fixed reference, shall be measured and recorded in accordance with Table 15-G-6.
8. The maximum test load in a cyclic performance test shall be held for 60 minutes. The load-hold period shall start as soon as the maximum test load is applied and the tieback movement, with respect to a fixed reference, shall be measured and recorded in accordance with Table 15-G-6. If the anchor movement between 6 and 60 minutes exceeds 0.04 inches (0.03 inches for pressure- and post-grouted tiebacks), the maximum test load shall be held for an additional 300 minutes. If the load-hold is extended the anchor movement shall be recorded in accordance with Table 15-G-6.
9. The maximum test load in a proof test shall be held for 60 minutes. The load-hold period shall start as soon as the maximum test load is applied and the anchor movement, with respect to a fixed reference, shall be measured and recorded in accordance with Table 15-G-6. If the anchor movement between 6 and 60 minutes exceeds 0.04 inches, the maximum test load shall be held for an additional 300 minutes. If the load-hold is extended, the tieback movement shall be recorded in accordance with the 360-minute creep measurements listed in Table 15-G-6.

AL = Alignment Load, FDL = Factored Design Load

References

Allen, Tony M., 2020, I-90 *Demonstration Project: Long-Term Performance of Tiebacks Installed in Glacially Overridden Clays*, Washington State Department of Transportation, Research Report WA-RD 823.1, 252 pp.

Appendix 15-H Preapproved Wall Appendix: Specific Requirements and Details for Hilfiker Welded Wire Faced Walls

In addition to the general design requirements provided in Appendix 15-A, the following specific design requirements shall be met:

No HITEC or IDEA evaluation report is currently available for this wall system. Design procedures for specific elements of the wall system have been provided to WSDOT in a letter dated September 7, 2021. The design procedures used by Hilfiker Retaining Walls shall be in full conformance with the AASHTO *LRFD Bridge Design Specifications* (2020).

Regarding the soil reinforcement material, the minimum wire size acceptable for permanent walls is W4.5 for the longitudinal wires. For the transverse wires, the minimum wire size shall be W3.5. For all permanent walls, the welded wire shall be galvanized in accordance with the AASHTO LRFD specifications. For temporary walls, galvanization is not required, but the life of the wire shall be designed to be adequate for the intended life.

Regarding the backing mats used in the welded wire facing, the minimum clear opening dimension of the backing mat shall not exceed the minimum particle size of the wall facing backfill. The maximum particle size for the wall facing backfill shall be 6 inches.

The maximum vertical spacing of soil reinforcement shall be 24 inches.

The culvert penetration and obstruction avoidance details are preapproved up to a diameter of 4 feet. Larger diameter culverts or obstructions are not considered preapproved. This wall is also preapproved for use with traffic barriers.

This wall system is preapproved for a welded wire/gravel fill face for vertical to near vertical facing batter and welded wire vegetated face for wall face batters as steep as 6V:1H. This preapproval presumes that the facing tolerances in the WSDOT *Standard Specifications* Section 6-13.3(1) for welded wire faced walls are met.

The following standard details shall be used for the Hilfiker Welded Wire Faced Wall system:

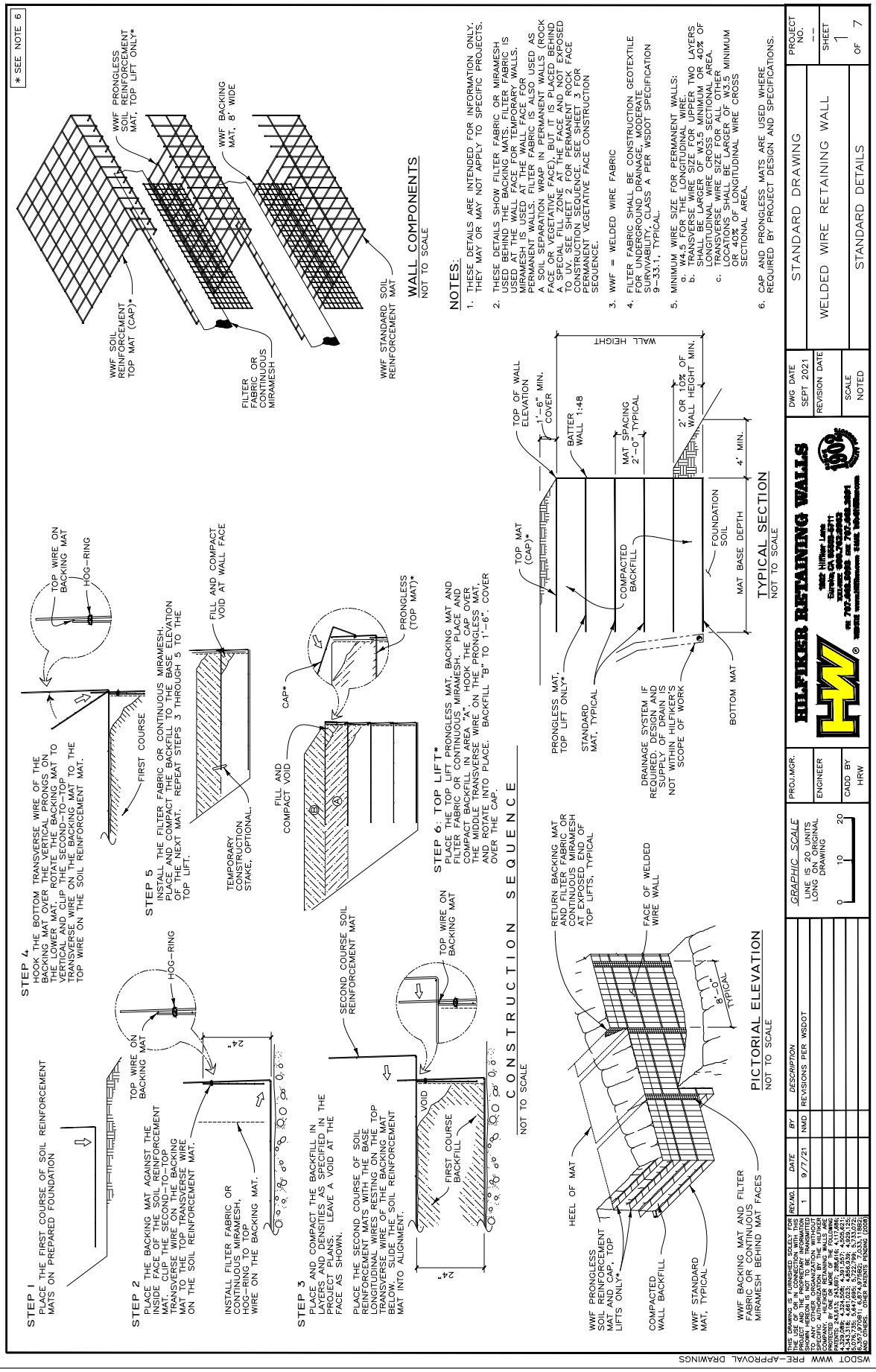
* SEE NOTE 6
WWF SOIL REINFORCEMENT TOP MAT (CAP)*
WWF PRONGLESS SOIL REINFORCEMENT MAT, TOP LIFT ONLY*
WWF BACKING MAT, 8' WIDE
FILTER FABRIC OR CONTINUOUS MIRAMESH
WWF STANDARD SOIL REINFORCEMENT MAT
WALL COMPONENTS
NOT TO SCALE
NOTES:
1. THESE DETAILS ARE INTENDED FOR INFORMATION ONLY. THEY MAY OR MAY NOT APPLY TO SPECIFIC PROJECTS.
2. THESE DETAILS SHOW FILTER FABRIC OR MIRAMESH USED BEHIND THE BACKING MATS. FILTER FABRIC IS MIRAMESH IS USED AT THE WALL FACE FOR PERMANENT WALLS. FILTER FABRIC IS ALSO USED AS A SOIL SEPARATION WRAP IN PERMANENT WALLS (ROCK FACE OR VEGETATIVE FACE), BUT IT IS PLACED BEHIND A SPECIAL FILL ZONE AT THE FACE AND NOT EXPOSED TO UV. SEE SHEET 6 FOR PERMANENT ROCK FACE CONSTRUCTION SEQUENCE, SEE SHEET 7 FOR PERMANENT VEGETATIVE FACE CONSTRUCTION SEQUENCE.
3. WWF = WELDED WIRE FABRIC
4. FILTER FABRIC SHALL BE CONSTRUCTION GEOTEXTILE FOR UNDERGROUND DRAINAGE MODERATE SURVIVABILITY, CLASS A PER WSDOT SPECIFICATION 9-33.1, TYPICAL.
5. MINIMUM WIRE SIZE FOR PERMANENT WALLS:
a. TRANSVERSE WIRE SIZE FOR THE TWO LAYERS SHALL BE LARGER OF W3.5 MINIMUM OR 40% OF LONGITUDINAL WIRE CROSS SECTIONAL AREA.
b. TRANSVERSE WIRE SIZE FOR ALL OTHER LOCATIONS SHALL BE LARGER OF W3.5 MINIMUM OR 40% OF LONGITUDINAL WIRE CROSS SECTIONAL AREA.
6. CAP AND PRONGLESS MATS ARE USED WHERE REQUIRED BY PROJECT DESIGN AND SPECIFICATIONS.
STEP 1
PLACE THE FIRST COURSE OF SOIL REINFORCEMENT MATS ON PREPARED FOUNDATION
STEP 2
PLACE THE BACKING MAT AGAINST THE INSIDE FACE OF THE SOIL REINFORCEMENT MAT. CLIP THE SECOND-TO-TOP TRANSVERSE WIRE ON THE BACKING MAT TO THE TOP TRANSVERSE WIRE ON THE SOIL REINFORCEMENT MAT.
TOP WIRE ON BACKING MAT
HOG-RING
24"
INSTALL FILTER FABRIC OR CONTINUOUS MIRAMESH, HOG-RING TO TOP WIRE ON THE BACKING MAT.
STEP 3
PLACE AND COMPACT THE BACKFILL IN LAYERS AND DENSITIES AS SPECIFIED IN THE PROJECT PLANS. LEAVE A VOID AT THE FACE AS SHOWN.
PLACE THE SECOND COURSE OF SOIL REINFORCEMENT MATS WITH THE BASE LONGITUDINAL WIRES RESTING ON THE TOP TRANSVERSE WIRE OF THE BACKING MAT BELOW. SLIDE THE SOIL REINFORCEMENT MAT INTO ALIGNMENT.
SECOND COURSE SOIL REINFORCEMENT MAT
TOP WIRE ON BACKING MAT
VOID
FIRST COURSE BACKFILL
24"
STEP 4
HOOK THE BOTTOM TRANSVERSE WIRE OF THE BACKING MAT OVER THE VERTICAL PRONGS ON THE LOWER MAT, ROTATE THE BACKING MAT TO VERTICAL AND CLIP THE SECOND-TO-TOP TRANSVERSE WIRE ON THE BACKING MAT TO THE TOP WIRE ON THE SOIL REINFORCEMENT MAT.
TOP WIRE ON BACKING MAT
HOG-RING
FIRST COURSE
STEP 5
INSTALL THE FILTER FABRIC OR CONTINUOUS MIRAMESH, PLACE AND COMPACT THE BACKFILL TO THE BASE ELEVATION OF THE NEXT MAT. REPEAT STEPS 3 THROUGH 5 TO THE TOP LIFT.
FILL AND COMPACT VOID AT WALL FACE
TEMPORARY CONSTRUCTION STAKE, OPTIONAL.
CONSTRUCTION SEQUENCE
NOT TO SCALE
CAP*
PRONGLESS (TOP MAT)*
FILL AND COMPACT VOID
STEP 6: TOP LIFT*
PLACE THE TOP LIFT PRONGLESS MAT, BACKING MAT AND FILTER FABRIC OR CONTINUOUS MIRAMESH. PLACE AND COMPACT BACKFILL IN AREA "A". HOOK THE CAP OVER THE MIDDLE TRANSVERSE WIRE ON THE PRONGLESS MAT, AND ROTATE INTO PLACE. BACKFILL "B" TO 1'-6" COVER OVER THE CAP.
WWF PRONGLESS SOIL REINFORCEMENT MAT AND CAP, TOP LIFTS ONLY*
COMPACTED WALL BACKFILL
WWF STANDARD MAT, TYPICAL
WWF BACKING MAT AND FILTER FABRIC OR CONTINUOUS MIRAMESH BEHIND MAT FACES
HEEL OF MAT
RETURN BACKING MAT AND FILTER FABRIC OR CONTINUOUS MIRAMESH AT EXPOSED END OF TOP LIFTS, TYPICAL
FACE OF WELDED WIRE WALL
6'-0" TYPICAL
PICTORIAL ELEVATION
NOT TO SCALE
TOP MAT (CAP)*
TOP OF WALL ELEVATION
1'-6" MIN. COVER
PRONGLESS MAT, TOP LIFT ONLY*
STANDARD MAT, TYPICAL
COMPACTED BACKFILL
DRAINAGE SYSTEM IF REQUIRED. DESIGN AND SUPPLY OF DRAIN IS NOT WITHIN HILFIKER'S SCOPE OF WORK
BOTTOM MAT
BATTER WALL 1:48
MAT SPACING 2'-0" TYPICAL
2' OR 10% OF WALL HEIGHT MIN.
WALL HEIGHT
FOUNDATION SOIL
MAT BASE DEPTH
4' MIN.
TYPICAL SECTION
NOT TO SCALE
HILFIKER RETAINING WALLS
1602 Hilfiker Lane
Eureka CA 95503-5911
tel. 707.443.5093 fax 707.444.3021
www.hilfiker.com
© 1995 Hilfiker Retaining Walls, Inc.
PROJ.MGR.
ENGINEER
CADD BY
HRW
GRAPHIC SCALE
LINE IS 20 UNITS LONG ON ORIGINAL DRAWING
0 10 20
DWG DATE
SEPT 2021
REVISION DATE
SCALE
NOTED
STANDARD DRAWING
WELDED WIRE RETAINING WALL
STANDARD DETAILS
PROJECT NO.
--
SHEET
1
OF 7
WSDOT WWW PRE-APPROVAL DRAWINGS
THIS DRAWING IS FURNISHED SOLELY FOR THE USE OF THE AUTHORIZED OWNER OF THE PROJECT AND THE PROPRIETARY INFORMATION HEREIN IS NOT TO BE DISCLOSED OR REVEALED TO ANY OTHER ORGANIZATION WITHOUT THE EXPRESS WRITTEN CONSENT OF HILFIKER COMPANY. HILFIKER RETAINING WALLS ARE PROTECTED BY ONE OR MORE OF THE FOLLOWING PATENTS: 4,193,719; 4,284,376; 4,284,377; 4,303,088; 4,391,552; 4,505,621; 4,515,501; 4,515,502; 4,522,532; 4,643,617; 5,076,735; 5,647,695; 5,722,798; 5,733,072; 5,827,011; 6,039,507; 6,457,907; 6,854,926 AND OTHERS PENDING (2005)
REV.NO. | DATE | BY | DESCRIPTION
1 | 9/7/21 | NMD | REVISIONS PER WSDOT

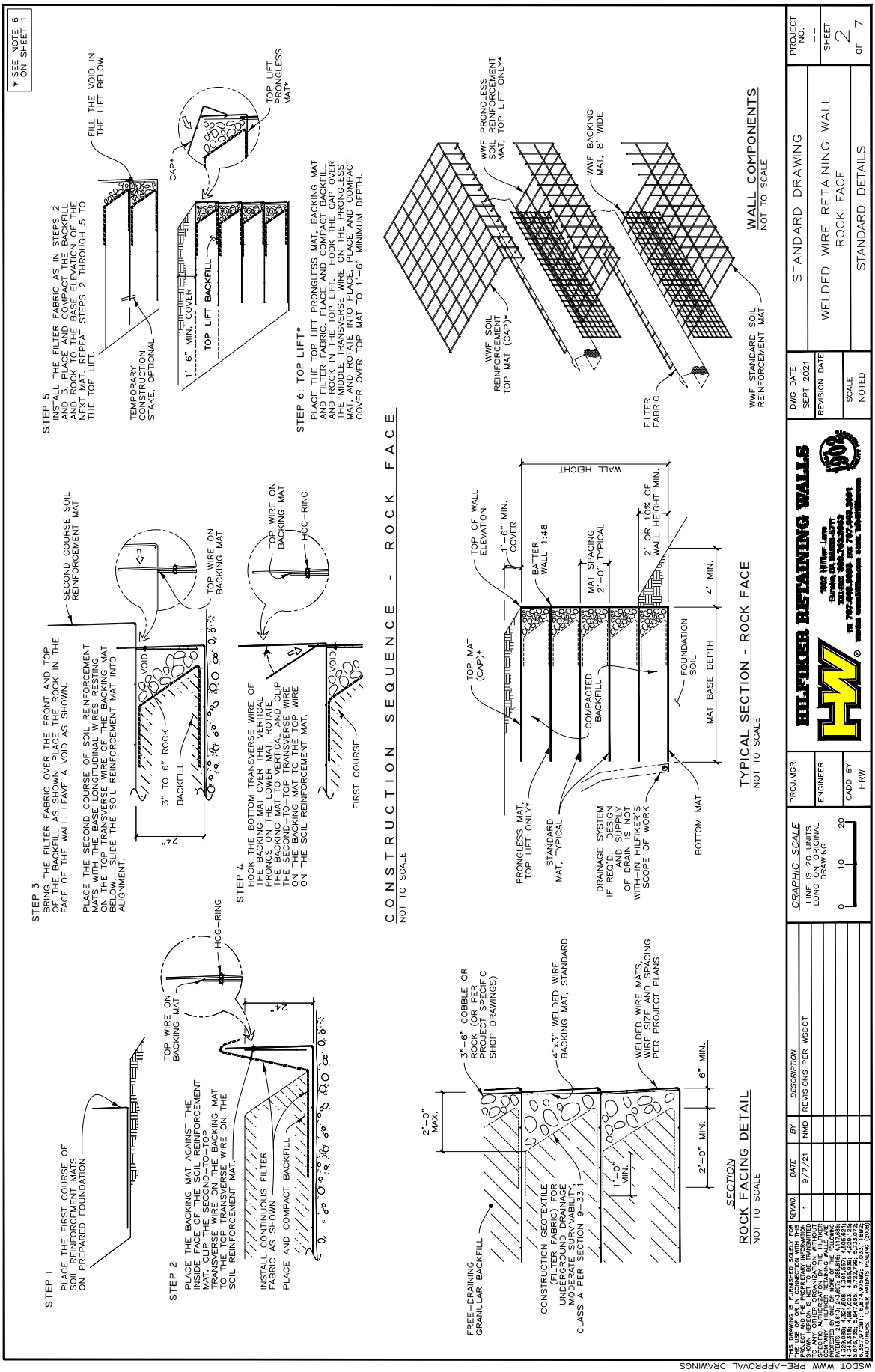
* SEE NOTE 6 ON SHEET 1
STEP 1
PLACE THE FIRST COURSE OF SOIL REINFORCEMENT MATS ON PREPARED FOUNDATION
STEP 2
PLACE THE BACKING MAT AGAINST THE INSIDE FACE OF THE SOIL REINFORCEMENT MAT. CLIP THE SECOND-TO-TOP TRANSVERSE WIRE ON THE BACKING MAT TO THE TOP TRANSVERSE WIRE ON THE SOIL REINFORCEMENT MAT.
TOP WIRE ON BACKING MAT
HOG-RING
24"
INSTALL CONTINUOUS FILTER FABRIC AS SHOWN
PLACE AND COMPACT BACKFILL
STEP 3
BRING THE FILTER FABRIC OVER THE FRONT AND TOP OF THE BACKFILL AS SHOWN. PLACE THE ROCK IN THE FACE OF THE WALL. LEAVE A VOID AS SHOWN.
PLACE THE SECOND COURSE OF SOIL REINFORCEMENT MATS WITH THE CLOSE LONGITUDINAL WIRES SPACED ON THE TOP TRANSVERSE WIRE OF THE BACKING MAT BELOW. SLIDE THE SOIL REINFORCEMENT MAT INTO ALIGNMENT.
SECOND COURSE SOIL REINFORCEMENT MAT
TOP WIRE ON BACKING MAT
24"
3" TO 6" ROCK
BACKFILL
VOID
STEP 4
HOOK THE BOTTOM TRANSVERSE WIRE OF THE BACKING MAT OVER THE VERTICAL PRONGS ON THE LOWER MAT. ROTATE THE BACKING MAT TO VERTICAL AND CLIP THE SECOND-TO-TOP TRANSVERSE WIRE ON THE BACKING MAT TO THE TOP WIRE ON THE SOIL REINFORCEMENT MAT.
TOP WIRE ON BACKING MAT
HOG-RING
VOID
FIRST COURSE
CONSTRUCTION SEQUENCE - ROCK FACE
NOT TO SCALE
STEP 5
INSTALL THE FILTER FABRIC AS IN STEPS 2 AND 3. PLACE AND COMPACT THE BACKFILL AND ROCK TO THE BASE ELEVATION OF THE NEXT MAT, REPEAT STEPS 2 THROUGH 5 TO THE TOP LIFT.
FILL THE VOID IN THE LIFT BELOW
TEMPORARY CONSTRUCTION STAKE, OPTIONAL
CAP*
TOP LIFT PRONGLESS MAT*
1'-6" MIN. COVER
TOP LIFT BACKFILL
STEP 6. TOP LIFT*
PLACE THE TOP LIFT PRONGLESS MAT, BACKING MAT AND FILTER FABRIC. PLACE AND COMPACT BACKFILL AND ROCK IN THE TOP LIFT. HOOK THE CAP OVER THE MIDDLE TRANSVERSE WIRE ON THE PRONGLESS MAT, AND ROTATE INTO PLACE. PLACE AND COMPACT COVER OVER TOP MAT TO 1'-6" MINIMUM DEPTH.
WWF SOIL REINFORCEMENT TOP MAT (CAP)*
WWF PRONGLESS SOIL REINFORCEMENT MAT, TOP LIFT ONLY*
WWF BACKING MAT, 8" WIDE
FILTER FABRIC
WWF STANDARD SOIL REINFORCEMENT MAT
WALL COMPONENTS
NOT TO SCALE
TOP OF WALL ELEVATION
1'-6" MIN. COVER
WALL HEIGHT
BATTER WALL 1:4B
MAT SPACING 2'-0" TYPICAL
2' OR 10% OF WALL HEIGHT MIN.
TOP MAT (CAP)*
PRONGLESS MAT, TOP LIFT ONLY*
STANDARD MAT, TYPICAL
COMPACTED BACKFILL
DRAINAGE SYSTEM DESIGN IF REQ'D. AND SUPPLY OF DRAIN IS NOT WITHIN HILFIKER'S SCOPE OF WORK
FOUNDATION SOIL
MAT BASE DEPTH
4' MIN.
BOTTOM MAT
TYPICAL SECTION - ROCK FACE
NOT TO SCALE
3"-6" COBBLE OR ROCK (OR PER PROJECT SPECIFIC SHOP DRAWINGS)
4"x3" WELDED WIRE BACKING MAT, STANDARD
WELDED WIRE MATS, WIRE SIZE AND SPACING PER PROJECT PLANS
2'-0" MAX.
6" MIN.
FREE-DRAINING GRANULAR BACKFILL
CONSTRUCTION GEOTEXTILE (FILTER FABRIC) FOR UNDERGROUND DRAINAGE MODERATE SURVIVABILITY, CLASS A PER SECTION 9-33.1
1'-0" MIN.
2'-0" MIN.
SECTION
ROCK FACING DETAIL
NOT TO SCALE
GRAPHIC SCALE
LINE IS 20 UNITS LONG IN ORIGINAL DRAWING
0 10 20
PROJ.MGR.
ENGINEER
CADD BY HRW
HILFIKER RETAINING WALLS
1602 Hilfiker Lane
Eureka, CA 95503-5911
tel: 707.443.5093 fax: 707.444.8971
www.hilfiker.com
DWG DATE SEPT 2021
REVISION DATE
SCALE NOTED
STANDARD DRAWING
WELDED WIRE RETAINING WALL ROCK FACE
STANDARD DETAILS
PROJECT NO. --
SHEET 2 OF 7
THIS DRAWING IS FURNISHED SOLELY FOR USE IN CONNECTION WITH THE PROJECT AND THE PROPRIETARY INFORMATION IS NOT TO BE DISCLOSED OR REPRODUCED TO ANY OTHER ORGANIZATION WITHOUT SPECIFIC AUTHORIZATION BY THE HILFIKER RETAINING WALL SYSTEM WHICH IS PROTECTED BY ONE OR MORE OF THE FOLLOWING U.S. PATENTS: 4,324,508; 4,391,557; 4,505,621; 4,515,501; 4,545,711; 4,645,383; 4,659,257; 5,076,735; 5,647,692; 5,733,072; 5,890,841; 6,439,811; 6,488,446; 6,609,863; AND OTHER PATENTS PENDING. (2005)
REV.NO. 1
DATE 9/7/21
BY NMD
DESCRIPTION REVISIONS PER WSDOT
WSDOT WWW PRE-APPROVAL DRAWINGS

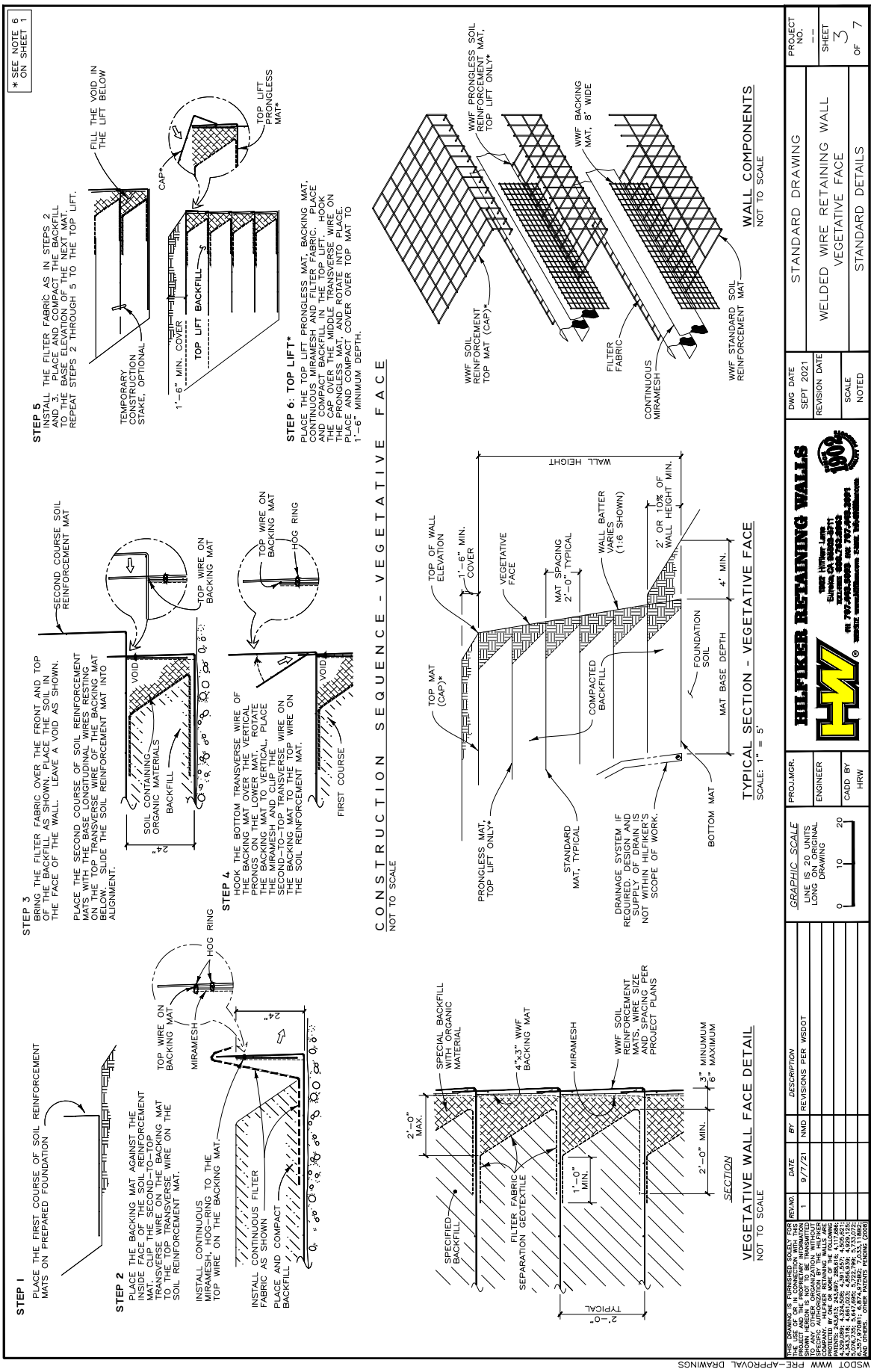
* SEE NOTE 6 ON SHEET 1
STEP 1
PLACE THE FIRST COURSE OF SOIL REINFORCEMENT MATS ON PREPARED FOUNDATION
STEP 2
PLACE THE BACKING MAT AGAINST THE INSIDE FACE OF THE SOIL REINFORCEMENT MAT. CLIP THE SECOND-TO-TOP TRANSVERSE WIRE OF THE BACKING MAT TO THE TOP TRANSVERSE WIRE ON THE SOIL REINFORCEMENT MAT.
INSTALL CONTINUOUS MIRAMESH, HOG-RING TO THE TOP WIRE ON THE BACKING MAT.
INSTALL CONTINUOUS FILTER FABRIC AS SHOWN
PLACE AND COMPACT BACKFILL
TOP WIRE ON BACKING MAT
MIRAMESH
HOG RING
2"
STEP 3
BRING THE FILTER FABRIC OVER THE FRONT AND TOP OF THE BACKFILL AS SHOWN. PLACE THE SOIL IN THE FACE OF THE WALL. LEAVE A VOID AS SHOWN.
PLACE THE SECOND COURSE OF SOIL REINFORCEMENT MATS WITH THE BASE LONGITUDINAL WIRES RESTING ON THE TOP TRANSVERSE WIRE OF THE BACKING MAT BELOW. SLIDE THE SOIL REINFORCEMENT MAT INTO ALIGNMENT.
SECOND COURSE SOIL REINFORCEMENT MAT
SOIL CONTAINING ORGANIC MATERIALS
BACKFILL
VOID
TOP WIRE ON BACKING MAT
STEP 4
HOOK THE BOTTOM TRANSVERSE WIRE OF THE BACKING MAT OVER THE VERTICAL PRONGS ON THE LOWER MAT. THE BACKING MAT IS VERTICAL, PLACE SECOND-TO-TOP TRANSVERSE WIRE ON THE BACKING MAT TO THE TOP WIRE ON THE SOIL REINFORCEMENT MAT.
TOP WIRE ON BACKING MAT
HOG RING
VOID
FIRST COURSE
STEP 5
INSTALL THE FILTER FABRIC AS IN STEPS 2 AND 3, PLACE AND COMPACT THE BACKFILL TO THE BASE ELEVATION OF THE NEXT MAT. REPEAT STEPS 2 THROUGH 5 TO THE TOP LIFT.
FILL THE VOID IN THE LIFT BELOW
TEMPORARY CONSTRUCTION STAKE, OPTIONAL
CAP*
TOP LIFT PRONGLESS MAT*
1'-6" MIN. COVER
TOP LIFT BACKFILL
STEP 6: TOP LIFT*
PLACE THE TOP LIFT PRONGLESS MAT, BACKING MAT, CONTINUOUS MIRAMESH AND FILTER FABRIC. PLACE AND COMPACT BACKFILL IN THE TOP LIFT. HOOK THE CAP OVER THE MIDDLE TRANSVERSE WIRE ON THE PRONGLESS MAT, AND ROTATE INTO PLACE. PLACE AND COMPACT COVER OVER TOP MAT TO 1'-6" MINIMUM DEPTH.
CONSTRUCTION SEQUENCE - VEGETATIVE FACE
NOT TO SCALE
WWF PRONGLESS SOIL REINFORCEMENT MAT, TOP LIFT ONLY*
WWF BACKING MAT, 8' WIDE
WWF SOIL REINFORCEMENT TOP MAT (CAP)*
FILTER FABRIC
CONTINUOUS MIRAMESH
WWF STANDARD SOIL REINFORCEMENT MAT
WALL COMPONENTS
NOT TO SCALE
TOP MAT (CAP)*
TOP OF WALL ELEVATION
1'-6" MIN. COVER
VEGETATIVE FACE
MAT SPACING 2'-0" TYPICAL
WALL BATTER VARIES (1:6 SHOWN)
2' OR 10% OF WALL HEIGHT MIN.
WALL HEIGHT
PRONGLESS MAT, TOP LIFT ONLY*
STANDARD MAT, TYPICAL
COMPACTED BACKFILL
FOUNDATION SOIL
MAT BASE DEPTH
4' MIN.
DRAINAGE SYSTEM IF REQUIRED, DESIGN AND SUPPLY OF DRAIN IS NOT WITHIN HILFIKER'S SCOPE OF WORK.
BOTTOM MAT
TYPICAL SECTION - VEGETATIVE FACE
SCALE: 1" = 5'
SPECIAL BACKFILL WITH ORGANIC MATERIAL
4"x3" WWF BACKING MAT
MIRAMESH
WWF SOIL REINFORCEMENT MATS, WIRE SIZE AND SPACING PER PROJECT PLANS
2'-0" MAX.
SPECIFIED BACKFILL
FILTER FABRIC SEPARATION GEOTEXTILE
1'-0" MIN.
2'-0" MIN.
3" MINIMUM 6" MAXIMUM
TYPICAL
2'-0"
SECTION
VEGETATIVE WALL FACE DETAIL
NOT TO SCALE
THIS DRAWING IS FURNISHED SOLELY FOR USE BY AUTHORIZED PERSONNEL OF HILFIKER RETAINING WALLS, LLC ("HILFIKER") AND THE PROPRIETARY INFORMATION IS NOT TO BE DISCLOSED TO ANY OTHER ORGANIZATION WITHOUT HILFIKER'S PRIOR WRITTEN AUTHORIZATION. THE HILFIKER DESIGN METHODS AND CONCEPTS ARE PROTECTED BY ONE OR MORE OF THE FOLLOWING PATENTS: 4,208,156; 4,324,508; 4,391,557; 4,605,621; 4,329,088; 4,324,508; 4,391,557; 4,605,621; 4,329,088; 4,324,508; 4,391,557; 4,605,621; 5,076,735; 5,697,682; 5,722,795; 5,733,072; AND 6,854,927; OTHER PATENTS PENDING (2005)
REV.NO. | DATE | BY | DESCRIPTION
1 | 9/7/21 | NMD | REVISIONS PER WSDOT
GRAPHIC SCALE
LINE IS 20 UNITS LONG ON ORIGINAL DRAWING
0 10 20
PROJ.MGR.
ENGINEER
CADD BY HRW
HILFIKER RETAINING WALLS
1602 Hilfiker Lane
Eureka, CA 95503-5911
DWG DATE SEPT 2021
REVISION DATE
SCALE NOTED
STANDARD DRAWING
WELDED WIRE RETAINING WALL VEGETATIVE FACE
STANDARD DETAILS
PROJECT NO. --
SHEET 3 OF 7
WSDOT WWW PRE-APPROVAL DRAWINGS

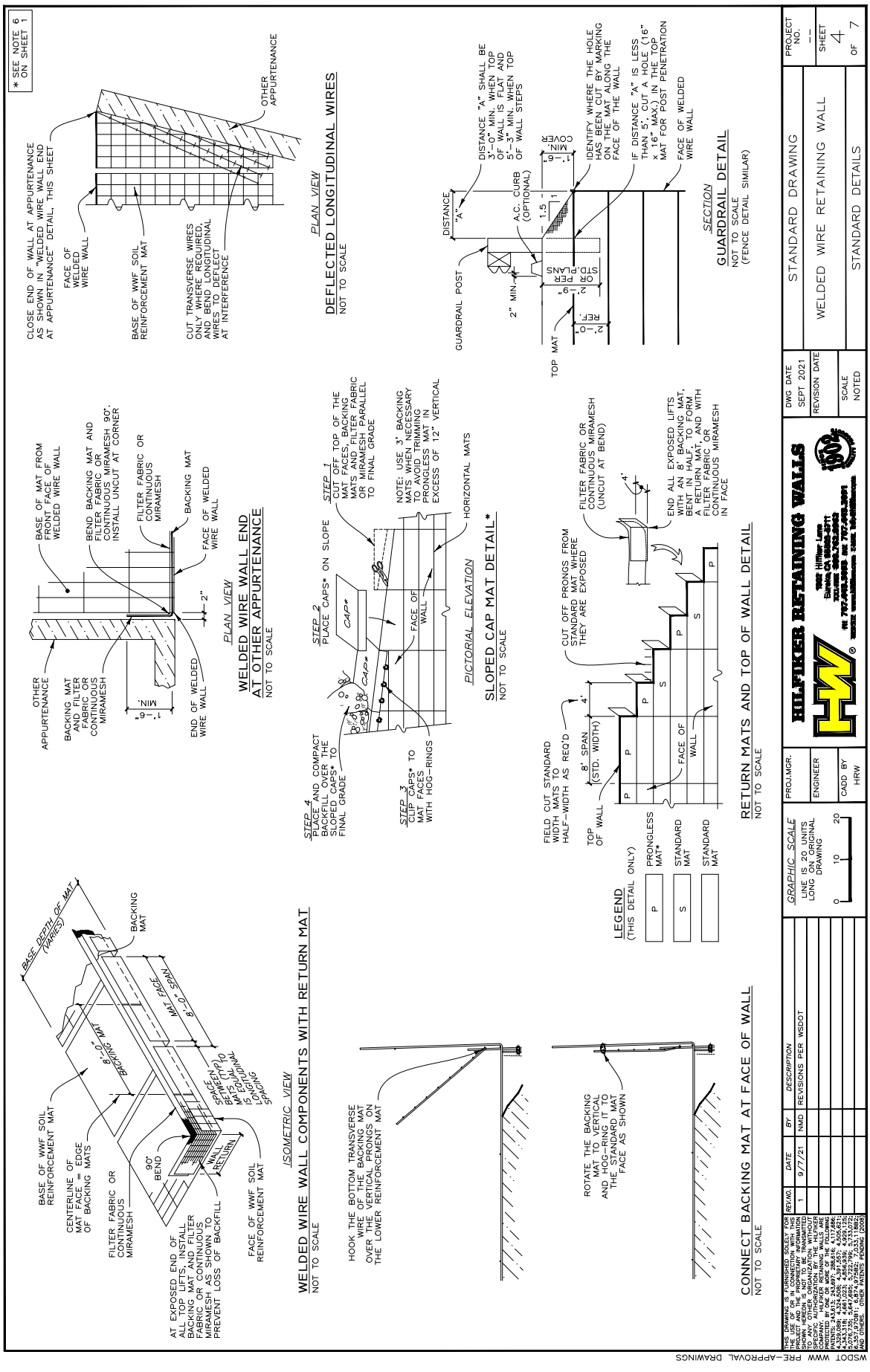
* SEE NOTE 6 ON SHEET 1
CLOSE END OF WALL AT APPURTENANCE AS SHOWN IN "WELDED WIRE WALL END AT APPURTENANCE" DETAIL, THIS SHEET
FACE OF WELDED WIRE WALL
BASE OF WWF SOIL REINFORCEMENT MAT
CUT TRANSVERSE WIRES ONLY WHERE REQUIRED AND BEND LONGITUDINAL WIRES TO DEFLECT AT INTERFERENCE
OTHER APPURTENANCE
PLAN VIEW
DEFLECTED LONGITUDINAL WIRES
NOT TO SCALE
OTHER APPURTENANCE
BACKING MAT AND FILTER FABRIC OR CONTINUOUS MIRAMESH
1'-6" MIN.
BASE OF MAT FROM FRONT FACE OF WELDED WIRE WALL
BEND BACKING MAT AND FILTER FABRIC OR CONTINUOUS MIRAMESH 90°. INSTALL UNCUT AT CORNER
FILTER FABRIC OR CONTINUOUS MIRAMESH
BACKING MAT
FACE OF WELDED WIRE WALL
2"
END OF WELDED WIRE WALL
PLAN VIEW
WELDED WIRE WALL END AT OTHER APPURTENANCE
NOT TO SCALE
STEP 1
CUT OFF TOP OF THE MAT FACE, BACKING MATS AND FILTER FABRIC OR MIRAMESH PARALLEL TO FINAL GRADE
STEP 2
PLACE CAPS* ON SLOPE
CAP*
CAP*
STEP 3
CLIP CAPS* TO MAT FACES WITH HOG-RINGS
STEP 4
PLACE AND COMPACT BACKFILL OVER THE CAPS* TO FINAL GRADE
FACE OF WALL
NOTE: USE 3' BACKING MATS WHEN NECESSARY TO AVOID TRIMMING PRONGLESS MAT IN EXCESS OF 12" VERTICAL
HORIZONTAL MATS
PICTORIAL ELEVATION
SLOPED CAP MAT DETAIL*
NOT TO SCALE
DISTANCE "A"
GUARDRAIL POST
A.C. CURB (OPTIONAL)
2" MIN.
TOP MAT
DISTANCE "A" SHALL BE 3'-0" MIN. WHEN TOP OF WALL IS FLAT AND 5'-3" MIN. WHEN TOP OF WALL STEPS
1'-0" MIN. COVER
1.5"
IDENTIFY WHERE THE HOLE HAS BEEN CUT BY MARKING ON THE MAT ALONG THE FACE OF THE WALL
IF DISTANCE "A" IS LESS THAN 5', CUT A HOLE (16" x 16" MAX.) IN THE TOP MAT FOR POST PENETRATION
FACE OF WELDED WIRE WALL
SECTION
GUARDRAIL DETAIL
NOT TO SCALE
(FENCE DETAIL SIMILAR)
FIELD CUT STANDARD WIDTH MATS TO HALF-WIDTH AS REQ'D
8' SPAN (STD. WIDTH)
4'
TOP OF WALL
FACE OF WALL
CUT OFF PRONGS FROM STANDARD MAT WHERE THEY ARE EXPOSED
FILTER FABRIC OR CONTINUOUS MIRAMESH (UNCUT AT BEND)
4'
END ALL EXPOSED LIFTS WITH AN 8' BACKING MAT, BENT IN HALF, TO FORM A RETURN MAT, AND WITH FILTER FABRIC OR CONTINUOUS MIRAMESH IN FACE
LEGEND
(THIS DETAIL ONLY)
P
PRONGLESS MAT*
S
STANDARD MAT
STANDARD MAT
RETURN MATS AND TOP OF WALL DETAIL
NOT TO SCALE
BASE DEPTH OF MAT (VARIES)
BACKING MAT
8'-0" BACKING MAT
MAT FACE
8'-0" SPAN
SPACE(S) BETWEEN MATS EQUAL MAT LONGITUDINAL SPACING
BASE OF WWF SOIL REINFORCEMENT MAT
CENTERLINE OF MAT FACE = EDGE OF BACKING MATS
FILTER FABRIC OR CONTINUOUS MIRAMESH
90° BEND
WALL RETURN
AT EXPOSED END OF ALL TOP LIFTS, INSTALL BACKING MAT AND FILTER FABRIC OR CONTINUOUS MIRAMESH AS SHOWN TO PREVENT LOSS OF BACKFILL
FACE OF WWF SOIL REINFORCEMENT MAT
ISOMETRIC VIEW
WELDED WIRE WALL COMPONENTS WITH RETURN MAT
NOT TO SCALE
HOOK THE BOTTOM TRANSVERSE WIRE OF THE BACKING MAT OVER THE VERTICAL PRONGS ON THE LOWER REINFORCEMENT MAT
ROTATE THE BACKING MAT TO VERTICAL AND CONNECT TO THE STANDARD MAT FACE AS SHOWN
CONNECT BACKING MAT AT FACE OF WALL
NOT TO SCALE
THIS DRAWING IS FURNISHED SOLELY FOR USE IN CONNECTION WITH THE PROJECT AND THE PROPRIETARY INFORMATION SHOWN THEREON IS NOT TO BE USED OTHERWISE WITHOUT SPECIFIC AUTHORIZATION BY THE HILFIKER COMPANY. THIS DRAWING IS PROTECTED BY ONE OR MORE OF THE FOLLOWING PATENTS: 4,324,526; 4,391,557; 4,505,621; 4,529,332; 4,564,321; 4,626,141; 4,767,245; 5,015,126; 5,249,892; 5,261,761; 5,273,375; 5,487,625; 5,722,798; 5,733,072; 5,839,757; 6,071,046; 6,287,061; 6,874,979; 7,226,251; AND OTHER PATENTS PENDING. ©2005
BY
NMD
DATE
9/7/21
REVNO
1
DESCRIPTION
REVISIONS PER WSDOT
GRAPHIC SCALE
LINE IS 20 UNITS LONG ON ORIGINAL DRAWING
0 10 20
PROJ.MGR.
ENGINEER
CADD BY HRW
HILFIKER RETAINING WALLS
1068 Hilfiker Lane
Eureka, CA 95503-9111
707.441.1700
fax 707.443.5091
DWG DATE SEPT 2021
REVISION DATE
SCALE NOTED
STANDARD DRAWING
WELDED WIRE RETAINING WALL
STANDARD DETAILS
PROJECT NO. --
SHEET 4 OF 7
WSDOT WWW PRE-APPROVAL DRAWINGS

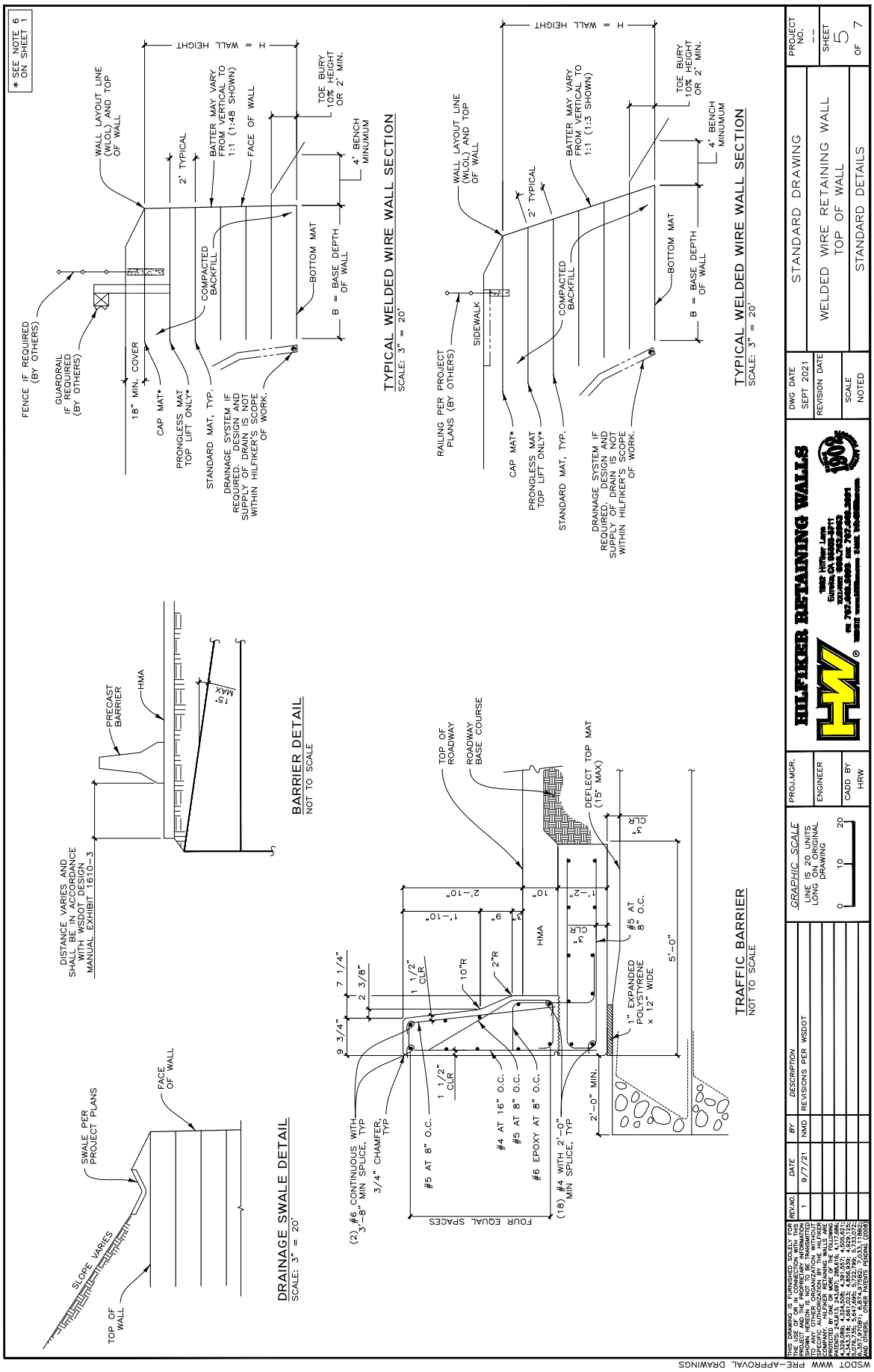
* SEE NOTE 6 ON SHEET 1
FENCE IF REQUIRED (BY OTHERS)
GUARDRAIL IF REQUIRED (BY OTHERS)
WALL LAYOUT LINE (WLOL) AND TOP OF WALL
18" MIN. COVER
CAP MAT*
PRONGLESS MAT TOP LIFT ONLY*
STANDARD MAT, TYP.
COMPACTED BACKFILL
DRAINAGE SYSTEM IF REQUIRED. DESIGN AND SUPPLY OF DRAIN IS NOT WITHIN HILFIKER'S SCOPE OF WORK.
2' TYPICAL
BATTER MAY VARY FROM VERTICAL TO 1:1 (1:48 SHOWN)
FACE OF WALL
BOTTOM MAT
B = BASE DEPTH OF WALL
H = WALL HEIGHT
TOE BURY 10% HEIGHT OR 2' MIN.
4' BENCH MINUMUM
TYPICAL WELDED WIRE WALL SECTION
SCALE: 3" = 20'
RAILING PER PROJECT PLANS (BY OTHERS)
SIDEWALK
TYPICAL WELDED WIRE WALL SECTION
SCALE: 3" = 20'
DISTANCE VARIES AND SHALL BE IN ACCORDANCE WITH WSDOT DESIGN MANUAL EXHIBIT 1610-3
PRECAST BARRIER
HMA
15° MAX
BARRIER DETAIL
NOT TO SCALE
SWALE PER PROJECT PLANS
FACE OF WALL
SLOPE VARIES
TOP OF WALL
DRAINAGE SWALE DETAIL
SCALE: 3" = 20'
TOP OF ROADWAY
ROADWAY BASE COURSE
DEFLECT TOP MAT (15° MAX)
(2) #6 CONTINUOUS WITH 3'-8" MIN SPLICE, TYP
3/4" CHAMFER, TYP
#5 AT 8" O.C.
#4 AT 16" O.C.
#5 AT 8" O.C.
#6 EPOXY AT 8" O.C.
(18) #4 WITH 2'-0" MIN SPLICE, TYP
FOUR EQUAL SPACES
HMA
#5 AT 8" O.C.
1" EXPANDED POLYSTYRENE x 12" WIDE
5'-0"
2'-0" MIN.
TRAFFIC BARRIER
NOT TO SCALE
WSDOT WWW PRE-APPROVAL DRAWINGS
THIS DRAWING IS FURNISHED SOLELY FOR THE USE OF LICENSED CONTRACTORS ON THIS PROJECT AND THE PROPRIETARY INFORMATION THEREIN IS NOT TO BE DISCLOSED TO ANY OTHER ORGANIZATION WITHOUT SPECIFIC AUTHORIZATION BY THE HILFIKER RETAINING WALLS SYSTEM AND METHOD SHOWN ARE PROTECTED BY ONE OR MORE OF THE FOLLOWING PATENTS: 4,324,506; 4,391,552; 4,505,621; 4,324,506; 4,391,552; 4,505,621; 4,533,278; 5,079,795; 5,611,645; 5,733,072; 5,911,541; 6,857,826; 7,153,070; AND OTHERS. OTHER PATENTS PENDING. (0808)
REV.NO. 1
DATE 9/7/21
BY NMD
DESCRIPTION REVISIONS PER WSDOT
GRAPHIC SCALE
LINE IS 20 UNITS LONG ON ORIGINAL DRAWING
0 10 20
PROJ.MGR.
ENGINEER
CADD BY HRW
HILFIKER RETAINING WALLS
1602 Hilfiker Lane
Eureka, CA 95503-9711
PH: 707.443.5093 FX: 707.444.3021
www.hilfiker.com Email: hilfiker@hilfiker.com
DWG DATE SEPT 2021
REVISION DATE
SCALE NOTED
STANDARD DRAWING
WELDED WIRE RETAINING WALL TOP OF WALL
STANDARD DETAILS
PROJECT NO. --
SHEET 5 OF 7

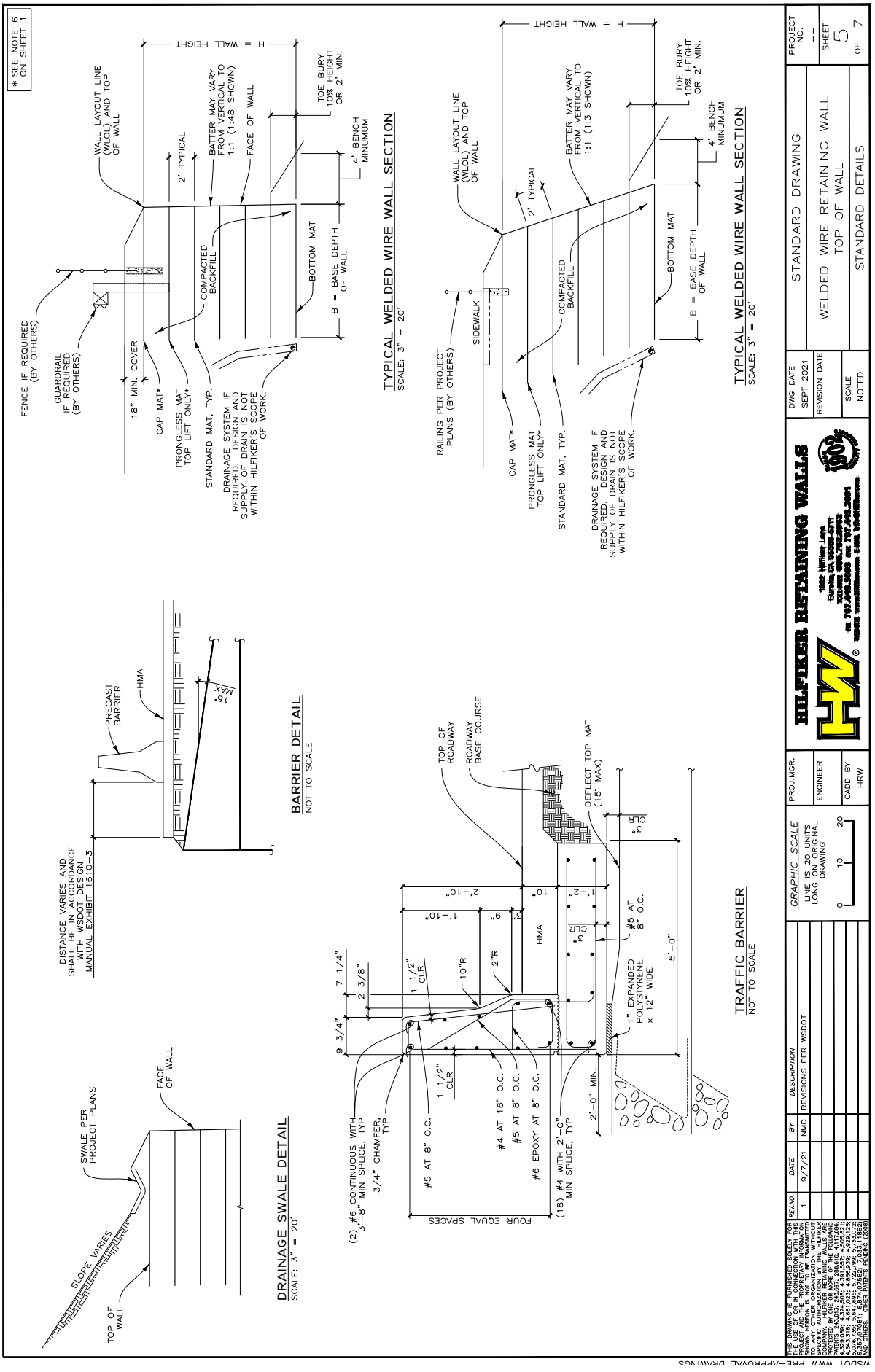
* SEE NOTE 6 ON SHEET 1
FENCE IF REQUIRED (BY OTHERS)
GUARDRAIL IF REQUIRED (BY OTHERS)
WALL LAYOUT LINE (WLOL) AND TOP OF WALL
18" MIN. COVER
CAP MAT*
2' TYPICAL
PRONGLESS MAT TOP LIFT ONLY*
COMPACTED BACKFILL
STANDARD MAT, TYP.
DRAINAGE SYSTEM IF REQUIRED. DESIGN AND SUPPLY OF DRAIN IS NOT WITHIN HILFIKER'S SCOPE OF WORK.
BATTER MAY VARY FROM VERTICAL TO 1:1 (1:48 SHOWN)
FACE OF WALL
H = WALL HEIGHT
TOE BURY 10% HEIGHT OR 2' MIN.
4' BENCH MINUMUM
BOTTOM MAT
B = BASE DEPTH OF WALL
TYPICAL WELDED WIRE WALL SECTION
SCALE: 3" = 20'
RAILING PER PROJECT PLANS (BY OTHERS)
SIDEWALK
BATTER MAY VARY FROM VERTICAL TO 1:1 (1:3 SHOWN)
TYPICAL WELDED WIRE WALL SECTION
SCALE: 3" = 20'
DISTANCE VARIES AND SHALL BE IN ACCORDANCE WITH WSDOT DESIGN MANUAL EXHIBIT 1610-3
PRECAST BARRIER
HMA
15° MAX
BARRIER DETAIL
NOT TO SCALE
TOP OF ROADWAY
ROADWAY BASE COURSE
DEFLECT TOP MAT (15° MAX)
(2) #6 CONTINUOUS WITH 3'-8" MIN SPLICE, TYP
3/4" CHAMFER, TYP
#5 AT 8" O.C.
1 1/2" CLR
#4 AT 16" O.C.
#5 AT 8" O.C.
#6 EPOXY AT 8" O.C.
(18) #4 WITH 2'-0" MIN SPLICE, TYP
FOUR EQUAL SPACES
HMA
#5 AT 8" O.C.
1" EXPANDED POLYSTYRENE x 12" WIDE
5'-0"
2'-0" MIN.
TRAFFIC BARRIER
NOT TO SCALE
SLOPE VARIES
SWALE PER PROJECT PLANS
FACE OF WALL
TOP OF WALL
DRAINAGE SWALE DETAIL
SCALE: 3" = 20'
THIS DRAWING IS FURNISHED SOLELY FOR THE USE OF HILFIKER RETAINING WALLS, INC. PROJECT AND THE PROPRIETARY INFORMATION HEREIN IS NOT TO BE DISCLOSED OR REPRODUCED TO ANY OTHER ORGANIZATION WITHOUT SPECIFIC AUTHORIZATION BY THE HILFIKER RETAINING WALLS, INC. THIS DRAWING IS PROTECTED BY ONE OR MORE OF THE FOLLOWING PATENTS: 4,193,719; 4,403,897; 4,408,931; 4,330,989; 4,324,506; 4,391,557; 4,505,621; 4,515,504; 4,403,897; 4,408,931; 4,676,696; 5,076,735; 5,647,695; 5,722,798; 5,733,072; 6,039,508; 6,371,697; 6,874,979B2; 7,033,116B2; AUSTRALIA 2003213915; CANADA 2,476,869; OTHER PATENTS PENDING (2020)
REV.NO. 1
DATE 9/7/21
BY NMD
DESCRIPTION REVISIONS PER WSDOT
GRAPHIC SCALE
LINE IS 20 UNITS LONG ON ORIGINAL DRAWING
0 10 20
PROJ.MGR.
ENGINEER
CADD BY HRW
HILFIKER RETAINING WALLS
1602 Hilfiker Lane
Eureka CA 95503-9311
707.443.5093 fax 707.443.5091
www.hilfiker.com
DWG DATE SEPT 2021
REVISION DATE
SCALE NOTED
STANDARD DRAWING
WELDED WIRE RETAINING WALL TOP OF WALL
STANDARD DETAILS
PROJECT NO. --
SHEET 5 OF 7
WSDOT WWW PRE-APPROVAL DRAWINGS

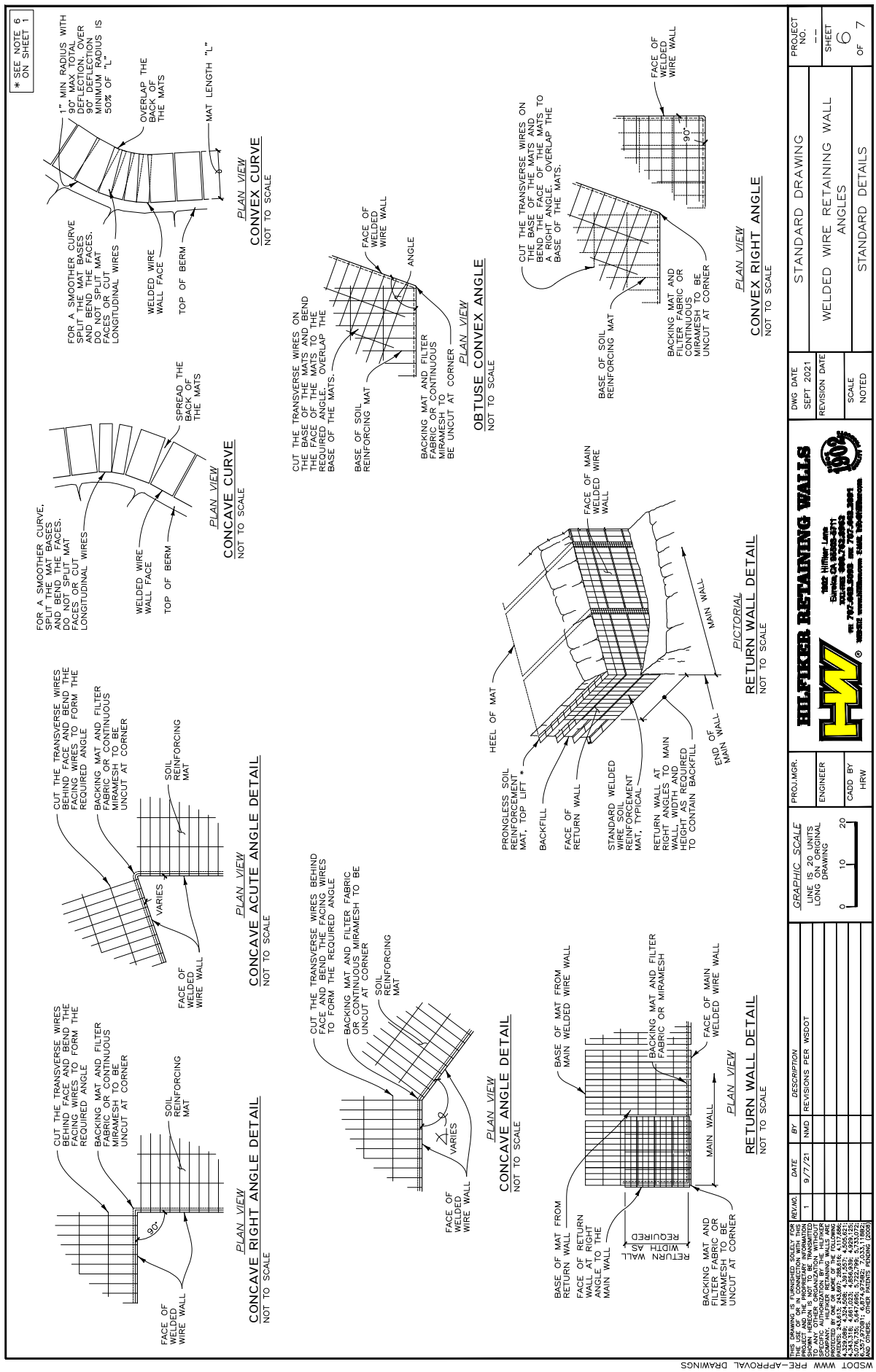
* SEE NOTE 6 ON SHEET 1
1" MIN RADIUS WITH 90° MAX TOTAL DEFLECTION OVER 90° DEFLECTION MINIMUM RADIUS IS 50% OF "L"
OVERLAP THE BACK OF THE MATS
MAT LENGTH "L"
FOR A SMOOTHER CURVE SPLIT THE MAT BASES AND BEND THE FACES. DO NOT SPLIT MAT FACES OR CUT LONGITUDINAL WIRES
WELDED WIRE WALL FACE
TOP OF BERM
PLAN VIEW
CONVEX CURVE
NOT TO SCALE
FOR A SMOOTHER CURVE, SPLIT THE MAT BASES AND BEND THE FACES. DO NOT SPLIT MAT FACES OR CUT LONGITUDINAL WIRES
WELDED WIRE WALL FACE
TOP OF BERM
SPREAD THE BACK OF THE MATS
PLAN VIEW
CONCAVE CURVE
NOT TO SCALE
CUT THE TRANSVERSE WIRES ON THE BASE OF THE MATS AND BEND THE FACE OF THE MATS TO THE REQUIRED ANGLE. OVERLAP THE BASE OF THE MATS.
BASE OF SOIL REINFORCING MAT
FACE OF WELDED WIRE WALL
ANGLE
BACKING MAT AND FILTER FABRIC OR CONTINUOUS MIRAMESH TO BE UNCUT AT CORNER
PLAN VIEW
OBTUSE CONVEX ANGLE
NOT TO SCALE
CUT THE TRANSVERSE WIRES ON THE BASE OF THE MATS AND BEND THE FACE OF THE MATS TO A RIGHT ANGLE. OVERLAP THE BASE OF THE MATS.
FACE OF WELDED WIRE WALL
90°
BASE OF SOIL REINFORCING MAT
BACKING MAT AND FILTER FABRIC OR CONTINUOUS MIRAMESH TO BE UNCUT AT CORNER
PLAN VIEW
CONVEX RIGHT ANGLE
NOT TO SCALE
CUT THE TRANSVERSE WIRES BEHIND FACE AND BEND THE FACING WIRES TO FORM THE REQUIRED ANGLE
BACKING MAT AND FILTER FABRIC OR CONTINUOUS MIRAMESH TO BE UNCUT AT CORNER
SOIL REINFORCING MAT
VARIES
FACE OF WELDED WIRE WALL
PLAN VIEW
CONCAVE ACUTE ANGLE DETAIL
NOT TO SCALE
CUT THE TRANSVERSE WIRES BEHIND FACE AND BEND THE FACING WIRES TO FORM THE REQUIRED ANGLE
BACKING MAT AND FILTER FABRIC OR CONTINUOUS MIRAMESH TO BE UNCUT AT CORNER
SOIL REINFORCING MAT
VARIES
FACE OF WELDED WIRE WALL
PLAN VIEW
CONCAVE ANGLE DETAIL
NOT TO SCALE
CUT THE TRANSVERSE WIRES BEHIND FACE AND BEND THE FACING WIRES TO FORM THE REQUIRED ANGLE
BACKING MAT AND FILTER FABRIC OR CONTINUOUS MIRAMESH TO BE UNCUT AT CORNER
SOIL REINFORCING MAT
90°
FACE OF WELDED WIRE WALL
PLAN VIEW
CONCAVE RIGHT ANGLE DETAIL
NOT TO SCALE
HEEL OF MAT
FACE OF MAIN WELDED WIRE WALL
PRONGLESS SOIL REINFORCEMENT MAT, TOP LIFT *
BACKFILL
FACE OF RETURN WALL
STANDARD WELDED WIRE SOIL REINFORCEMENT MAT, TYPICAL
RETURN WALL AT RIGHT ANGLES TO MAIN WALL WIDTH AND HEIGHT AS REQUIRED TO CONTAIN BACKFILL
MAIN WALL
END OF MAIN WALL
PICTORIAL
RETURN WALL DETAIL
NOT TO SCALE
BASE OF MAT FROM MAIN WELDED WIRE WALL
FACE OF RETURN WALL AT RIGHT ANGLE TO THE MAIN WALL
RETURN WALL WIDTH AS REQUIRED
BACKING MAT AND FILTER FABRIC OR MIRAMESH
FACE OF MAIN WELDED WIRE WALL
MAIN WALL
BACKING MAT AND FILTER FABRIC OR MIRAMESH TO BE UNCUT AT CORNER
PLAN VIEW
RETURN WALL DETAIL
NOT TO SCALE
THIS DRAWING IS FURNISHED SOLELY FOR THE USE OF IN CONNECTION WITH THIS PROJECT AND SHALL NOT BE TRANSMITTED OR LOANED OR DISCLOSED WITHOUT THE WRITTEN CONSENT OF THE HILFIKER COMPANY. THE INFORMATION SHOWN HEREON IS NOT TO BE TRANSMITTED TO ANY PARTY OUTSIDE THE OWNER'S ORGANIZATION WITHOUT SPECIFIC AUTHORIZATION BY THE HILFIKER COMPANY. THE INFORMATION SHOWN HEREON IS PROTECTED BY ONE OR MORE OF THE FOLLOWING PATENTS: 4,343,813; 4,343,816; 4,343,817; 4,343,818; 4,343,819; 4,343,820; 4,343,821; 4,343,822; 4,343,823; 4,343,824; 4,343,825; 4,343,826; 4,343,827; 4,343,828; 4,343,829; 4,343,830; 4,343,831; 4,343,832; 4,343,833; 4,343,834; 4,343,835; 4,343,836; 4,343,837; 4,343,838; 4,343,839; 4,343,840; 4,343,841; 4,343,842; 4,343,843; 4,343,844; 4,343,845; 4,343,846; 4,343,847; 4,343,848; 4,343,849; 4,343,850; 4,343,851; 4,343,852; 4,343,853; 4,343,854; 4,343,855;

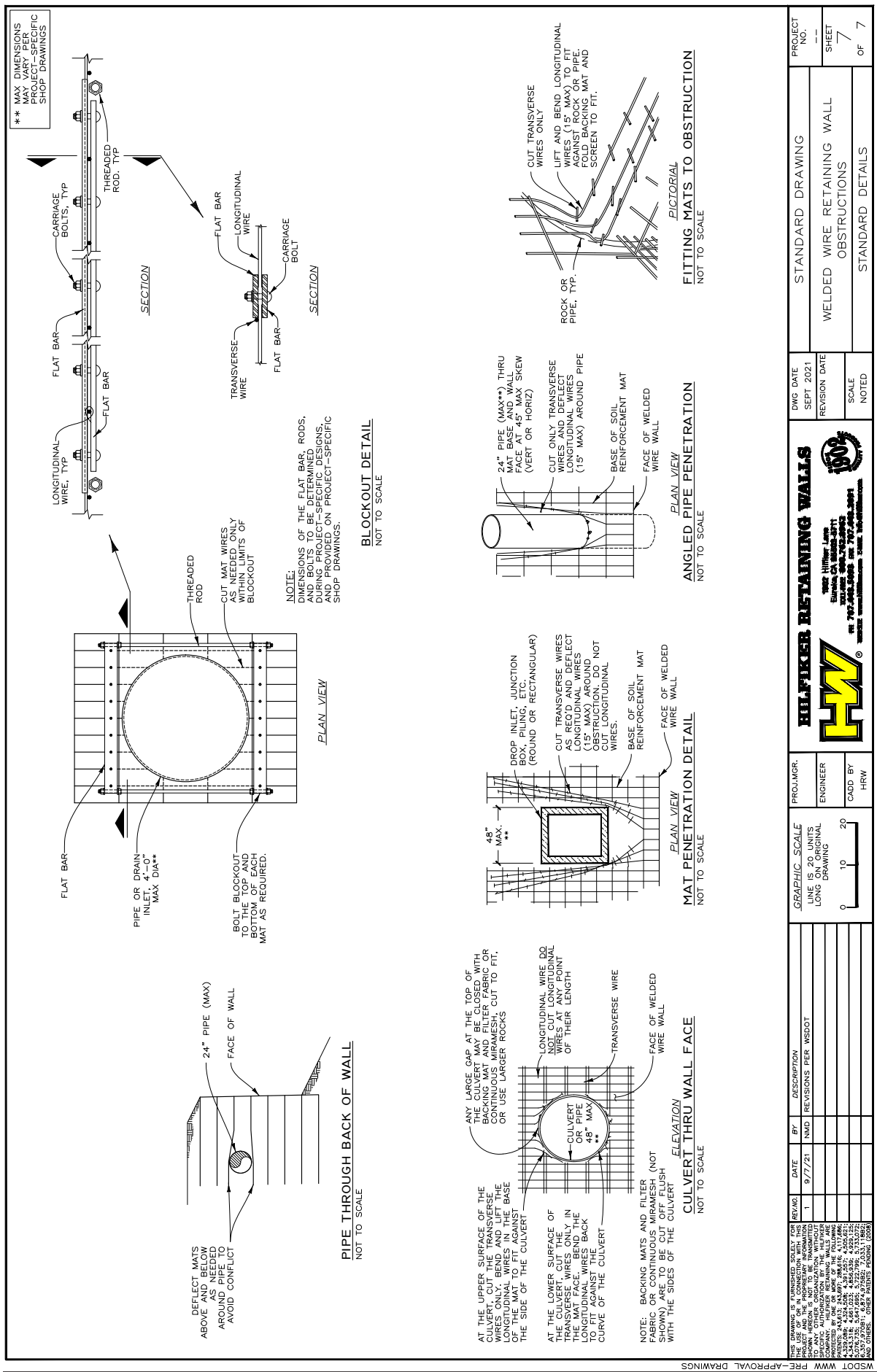
** MAX DIMENSIONS MAY VARY PER PROJECT-SPECIFIC SHOP DRAWINGS
LONGITUDINAL WIRE, TYP
FLAT BAR
CARRIAGE BOLTS, TYP
THREADED ROD, TYP
SECTION
FLAT BAR
LONGITUDINAL WIRE
TRANSVERSE WIRE
CARRIAGE BOLT
SECTION
FLAT BAR
THREADED ROD
CUT MAT WIRES AS NEEDED ONLY WITHIN LIMITS OF BLOCKOUT
NOTE:
DIMENSIONS OF THE FLAT BAR, RODS, AND BOLTS TO BE DETERMINED DURING PROJECT-SPECIFIC DESIGNS, AND PROVIDED ON PROJECT-SPECIFIC SHOP DRAWINGS.
BLOCKOUT DETAIL
NOT TO SCALE
PIPE OR DRAIN INLET, 4'-0" MAX DIA**
BOLT BLOCKOUT TO THE TOP AND BOTTOM OF EACH MAT AS REQUIRED.
PLAN VIEW
24" PIPE (MAX)
FACE OF WALL
DEFLECT MATS ABOVE AND BELOW AS NEEDED AROUND PIPE TO AVOID CONFLICT
PIPE THROUGH BACK OF WALL
NOT TO SCALE
ANY LARGE GAP AT THE TOP OF THE CULVERT MAY BE CLOSED WITH BACKING MAT AND FILTER FABRIC OR CONTINUOUS MIRAMESH, CUT TO FIT, OR USE LARGER ROCKS
AT THE UPPER SURFACE OF THE CULVERT, CUT THE TRANSVERSE WIRES ONLY; BEND AND LIFT THE LONGITUDINAL WIRES IN THE BASE OF THE MAT TO FIT AGAINST THE SIDE OF THE CULVERT
AT THE LOWER SURFACE OF THE CULVERT, CUT THE TRANSVERSE WIRES ONLY IN THE MAT FACE. BEND THE LONGITUDINAL WIRES BACK TO FIT AGAINST THE CURVE OF THE CULVERT
LONGITUDINAL WIRE DO NOT CUT LONGITUDINAL WIRES AT ANY POINT OF THEIR LENGTH
TRANSVERSE WIRE
CULVERT OR PIPE 48" MAX **
FACE OF WELDED WIRE WALL
NOTE: BACKING MATS AND FILTER FABRIC OR CONTINUOUS MIRAMESH (NOT SHOWN) ARE TO BE CUT OFF FLUSH WITH THE SIDES OF THE CULVERT
ELEVATION
CULVERT THRU WALL FACE
NOT TO SCALE
48" MAX. **
DROP INLET, JUNCTION BOX, PILING, ETC. (ROUND OR RECTANGULAR)
CUT TRANSVERSE WIRES AS REQ'D AND DEFLECT LONGITUDINAL WIRES (15" MAX) AROUND OBSTRUCTION. DO NOT CUT LONGITUDINAL WIRES.
BASE OF SOIL REINFORCEMENT MAT
FACE OF WELDED WIRE WALL
PLAN VIEW
MAT PENETRATION DETAIL
NOT TO SCALE
24" PIPE (MAX**) THRU MAT BASE AND WALL FACE AT 45° MAX SKEW (VERT OR HORIZ)
CUT ONLY TRANSVERSE WIRES AND DEFLECT LONGITUDINAL WIRES (15" MAX) AROUND PIPE
BASE OF SOIL REINFORCEMENT MAT
FACE OF WELDED WIRE WALL
PLAN VIEW
ANGLED PIPE PENETRATION
NOT TO SCALE
CUT TRANSVERSE WIRES ONLY
LIFT AND BEND LONGITUDINAL WIRES (15" MAX) TO FIT AGAINST ROCK OR PIPE. FOLD BACKING MAT AND SCREEN TO FIT.
ROCK OR PIPE, TYP.
PICTORIAL
FITTING MATS TO OBSTRUCTION
NOT TO SCALE
THIS DRAWING IS FURNISHED SOLELY FOR THE USE OF PERSONS IN CONNECTION WITH THE WORK OF THE HILFIKER COMPANY AS SHOWN HEREON IS NOT TO BE TRANSMITTED OR LOANED TO OTHERS WITHOUT WRITTEN AUTHORIZATION BY THE HILFIKER COMPANY. THE DESIGNS SHOWN HEREON ARE PROTECTED BY ONE OR MORE OF THE FOLLOWING PATENTS: 4,443,133; 4,544,301; 4,565,474; 4,737,056; 4,793,742; 4,824,291; 4,832,537; 4,850,751; 4,343,118; 4,661,023; 4,856,939; 4,923,125; 4,702,652; 4,744,702; 4,822,217; 4,533,272; 6,357,970B1; 6,874,975B2; 7,033,118B2; AND OTHERS. OTHER PATENTS PENDING (2006)
GRAPHIC SCALE
LINE IS 20 UNITS LONG ON ORIGINAL DRAWING
0 10 20
PROJ.MGR.
ENGINEER
CADD BY HRW
HILFIKER RETAINING WALLS
1902 Hilfiker Lane
Eureka, CA 95503-9711
707.443.5093 fax 707.443.5091
www.hilfiker.com
DWG DATE SEPT 2021
REVISION DATE
SCALE NOTED
STANDARD DRAWING
WELDED WIRE RETAINING WALL OBSTRUCTIONS
STANDARD DETAILS
PROJECT NO. --
SHEET 7 OF 7
WSDOT WWW PRE-APPROVAL DRAWINGS
REV.NO. 1
DATE 9/7/21
BY NMD
DESCRIPTION REVISIONS PER WSDOT

This page intentionally left blank.

Appendix 15-I Vacant

This page intentionally left blank.

Appendix 15-J Preapproved Wall Appendix: Specific Requirements and Details for Reinforced Earth (RECO) Concrete Panel Walls

In addition to the general design requirements provided in Appendix 15-A, the following specific requirements apply to the design of the Reinforced Earth™ concrete 5 feet × 5 feet panel faced retaining wall:

No HITEC evaluation report is currently available for this wall system. Design procedures for specific elements of the wall system have been provided to WSDOT in a binder dated March 29, 2004. The design procedures used by RECO are based on the AASHTO Standard Specifications for Highway Bridges (2002). Internal stability is based on the use of the Coherent Gravity method per the other widely used and accepted methods clause in the AASHTO Standard Specifications. The Coherent Gravity Method should yield similar results to the AASHTO Simplified Method for this wall system. Interim approval is given for the continued use of the AASHTO

Standard Specifications and the Coherent Gravity Method as the basis for design. Note the connector between the wall face panels and the soil reinforcement strips shall be designed to have adequate life considering corrosion loss as illustrated in the March 29, 2004 binder provided to WSDOT by RECO.

Reinforcement pullout shall be calculated based on the default values for steel grid reinforcement provided in the AASHTO Specifications. If, at some future time product and soil specific pullout data is provided to support use of non-default pullout interaction coefficients, it should be noted that LRFD pullout resistance design using these product and soil specific interaction coefficients has not been calibrated using product specific data statistics and reliability theory. Therefore, the specified resistance factors in the GDM and AASHTO LRFD Specifications should not be considered applicable to product specific pullout interaction coefficients.

Approved details for the Reinforced Earth™ concrete 5 feet × 5 feet panel faced retaining wall system are provided in the following plan sheets. Exceptions and additional requirements regarding these approved details are as follows:

- Several plan sheets were submitted that detail panels with dimensions other than 5 feet × 5 feet. The cruciform shaped panels are also considered preapproved for use in WSDOT projects. However, unless otherwise shown in the contract, it should always be assumed that the 5 feet × 5 feet panels are intended for WSDOT projects. Other panel sizes may be used by special design (e.g., full height panels), with the approval of the State Bridge Design Engineer and the State Geotechnical Engineer, provided a complete wall design with detailed plans are developed and included in the construction contract (i.e., walls with larger facing panels shall not be submitted as shop drawings in design-bid-build projects).

- Where filter cloth or geotextile fabric is shown, WSDOT reserves the right to require the use *Standard Specification* materials as specified in *Standard Specification* Section 9-33 that are similar to those specified in this plan sheet.
- Where steel strips are skewed to avoid a backfill obstruction, the maximum skew angle shall be 15 degrees.
- The culvert penetration and obstruction avoidance details are preapproved up to a diameter of 4 feet. Larger diameter culverts or obstructions are not considered preapproved. This wall is also preapproved for use with traffic barriers.

The Reinforced Earth Company
8614 Westwood Center Drive Suite 1100, Vienna, Virginia 22182 (703) 821-1175

STANDARD PRECAST PANEL SHOP DRAWINGS - SQUARE PANELS

PANEL GENERAL NOTES

NOTES:

1. REINFORCEMENT SHOWN SHALL COMPLY TO THE ASTM A615, GRADE 60 REBAR LAYOUT WILL BE DETAILED AND SHOWN ON PANEL SHOP DRAWINGS.
2. 1/2" x 1/2" CHAMFER SHALL BE PROVIDED ON ALL EXPOSED EDGES (FRONT FACE ONLY).
3. ALL PANEL TYPES AND OTHER RELATED ELEMENTS WILL BE DETAILED ON SHOP DRAWINGS.
4. PANEL DESIGN STRUCTURAL THICKNESS IS 5 1/2" MINIMUM, THIS THICKNESS MUST INCREASE TO ACCOMMODATE ANY ARCHITECTURAL SCULPTURED FINISH.
5. ACTUAL LOCATION OF REBARS WILL BE ADJUSTED TO ACCOMMODATE PANEL CASTING.
6. PANEL REINFORCEMENT SHALL BE PLACED WITH A MINIMUM 1 3/16" CLEARANCE FROM THE TIE STRIPS. IF MESH REINFORCEMENT IS USED, THE TIE STRIP LOCATION SHALL BE ADJUSTED TO PROVIDE THE MINIMUM REQUIRED CLEARANCE OF 1 3/16".
7. CONCRETE FOR PANELS SHALL HAVE A MINIMUM COMPRESSIVE STRENGTH AFTER 28 DAYS OF 4000 p.s.i.
8. TIE STRIPS SHALL BE STEEL ASTM A570 GRADE 50 (GALVANIZED PER ASTM A-123).
9. VERTICAL REINFORCING BARS SHALL BE PLACED 2" MIN. CLEAR FROM THE BACK FACE OF THE PANEL.
10. ALL REINFORCING BARS SHALL BE STOPPED 2" CLEAR FROM ANY EDGE OF PANEL UNLESS NOTED ON INDIVIDUAL FABRICATION DRAWING.
11. ALL INDIVIDUAL FABRICATION DRAWINGS ARE SHOWN BACK FACE.
12. IN THE CASE OF CUT PANELS AND PANELS WITH HOLES, ADDITIONAL REINFORCEMENT SHOWN ON THE SHOP DRAWINGS SHALL BE PROVIDED ALONG WITH THE MESH REINFORCEMENT.
13. ALL PANELS SHALL HAVE TWO 1-TON LIFTING INSERTS, EXCEPT FOR M AND N PANELS. THE M AND N PANELS SHALL HAVE TWO 2-TON ERECTION HEAD ANCHORS WITH 2-TON SHEAR BARS.

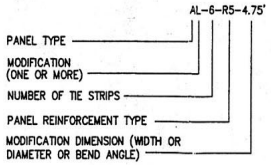

This drawing contains information proprietary to The Reinforced Earth Company, and is being furnished for the use of WASHINGTON DOT only in connection with this project, and the information contained herein is not to be transmitted to any other organization unless specifically authorized in writing by The Reinforced Earth Company. The Reinforced Earth Company is exclusive licensee in the United States under patents issued to Henry Vidal, and the furnishing of this drawing does not constitute an expressed or implied license under the Vidal patents.

The design contained on these drawings is based on information provided by the owner. On the basis of this information, The Reinforced Earth Company has designed, and is responsible for the internal stability of the structure only. External stability, including foundation (bearing capacity and settlement) and slope stability (sliding and rotation), is the responsibility of the owner.

The Reinforced Earth Company
8614 Westwood Center Drive Suite 1100, Vienna, Virginia 22182 (703) 821-1175

"REINFORCED EARTH" is the registered trademark of The Reinforced Earth Company.

DESIGNED BY:				PROJECT NAME	PRE-APPROVAL	DATE 03/23/04
PROJECT ENGR:				LOCATION	WASHINGTON STATE	CONTRACT NO. RE-XXXX
CHECKED BY:				OWNER	WASHINGTON DOT	DRAWING NO. S1 OF S5
ENG. MANAGER	REV.	DATE	DESCRIPTION	DRAWING COVERS	GENERAL NOTES	SCALE AS SHOWN

PANEL THICKNESS	REINFORCEMENT DESIGNATION	PANEL REINFORCEMENT A_S	MAXIMUM ALLOWABLE HORIZONTAL STRESS AT FACING (KSF)
5 1/2" (MIN.)	R5	6–#3 VERTICAL 5–#3 HORIZONTAL	1.20
	R7	6–#4 VERTICAL 5–#4 HORIZONTAL	3.00

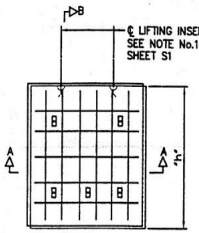

A-5-R5

PANEL TYPE	"h"
A & H	4'-10 1/4"
B & D	2'-4 3/4"
C	1'-9 1/2"
E	3'-0 1/4"
F & Q	3'-7 1/2"
G	4'-3"
K	5'-5 3/4"
L & P	6'-1"
M	6'-8 1/2"
N	7'-4"

NOTE:
CONCRETE COVER ON ALL REINFORCEMENT TO BE 2" MIN.

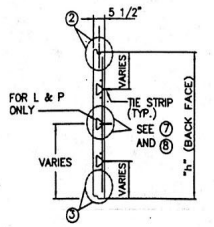

SECTION B–B

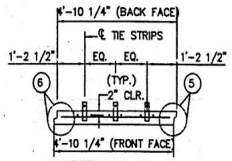

SECTION A–A

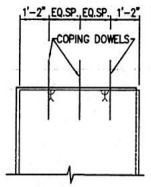

DETAIL "O"
SCALE: 1/2"=1'-0"

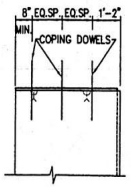

DETAIL "P"
SCALE: 1/2"=1'-0"

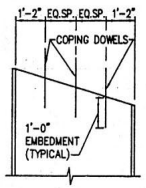

DETAIL "Q"
SCALE: 1/2"=1'-0"

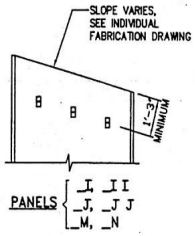

PANELS { _I, _I I
_J, _J J
M, _N

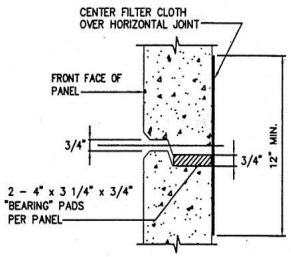

① HORIZONTAL JOINT
SCALE: 3"=1'-0"

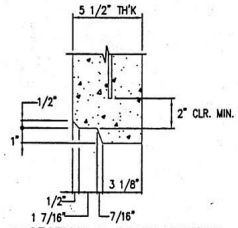

③ SECTION ② PANEL BOTTOM
SCALE: 3"=1'-0"

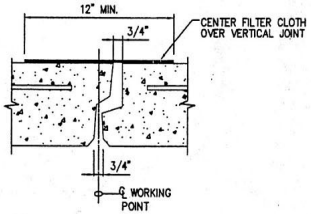

④ VERTICAL JOINT
SCALE: 3"=1'-0"

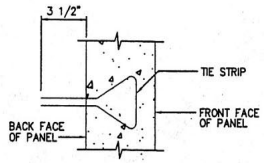

⑦ PARTIAL SECTION ② TIE STRIP
SCALE: 3"=1'-0"

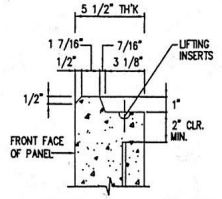

② SECTION ② PANEL TOP
SCALE: 3"=1'-0"

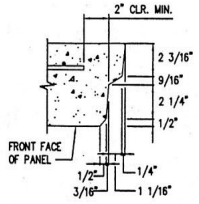

⑤ SECTION ② PANEL RIGHT SIDE
SCALE: 3"=1'-0"

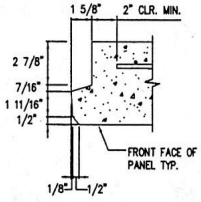

⑥ SECTION ② PANEL LEFT SIDE
SCALE: 3"=1'-0"

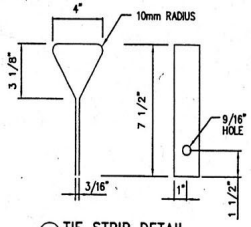

⑧ TIE STRIP DETAIL
SCALE: 3"=1'-0"

This drawing contains information proprietary to The Reinforced Earth Company, and is being furnished for the use of WASHINGTON DOT only in connection with this project, and the information contained herein is not to be transmitted to any other organization unless specifically authorized in writing by The Reinforced Earth Company. The Reinforced Earth Company is exclusive licensee in the United States under patents issued to Henry Vidal, and the furnishing of this drawing does not constitute an expressed or implied license under the Vidal patents.

The design contained on these drawings is based on information provided by the owner. On the basis of this information, The Reinforced Earth Company has designed, and is responsible for the internal stability of the structure only. External stability, including foundation (bearing capacity and settlement) and slope stability (sliding and rotation), is the responsibility of the owner.

The Reinforced Earth Company
8614 Westwood Center Drive Suite 1100, Vienna, Virginia 22182 (703) 821-1175

"REINFORCED EARTH" is the registered trademark of The Reinforced Earth Company.

DESIGNED BY:				PROJECT NAME	PRE-APPROVAL
PROJECT ENGR:				LOCATION	WASHINGTON STATE
CHECKED BY:				OWNER	WASHINGTON DOT
ENG. MANAGER	REV.	DATE	DESCRIPTION	DRAWING COVERS	DETAILS

DATE	CONTRACT NO.	DRAWING NO.	SCALE
03/23/04	RE–XXXX	S2 OF S5	AS SHOWN

4'-10 1/4" (BACK FACE)
1'-2 1/2" 2'-5 1/4" 1'-2 1/2"
TIE STRIPS (TYP)
2' CLR.
1 SECTION A-A
WITH 2 TIE STRIPS
1'-2 1/2" EQ. EQ. 1'-2 1/2"
2 SECTION A-A
WITH 3 TIE STRIPS
1'-2 1/2" 8 3/4" 11 3/4" 8 3/4" 1'-2 1/2"
3 SECTION A-A
WITH 4 TIE STRIPS
1'-2 1/2" EQ. EQ. EQ. EQ. 1'-2 1/2"
4 SECTION A-A
WITH 5 TIE STRIPS
1'-2 1/2" EQUIDISTANCED 1'-2 1/2"
5 SECTION A-A
WITH 6 TIE STRIPS
VARIES
NOM. WIDTH -1 7/8"
1'-2 1/2" EQ. EQ. 10 1/2" TYP.
6 SECTION A-A
FOR LEFT CUT PANELS
VARIES
NOM. WIDTH +1 1/8"
10 1/2" EQ. EQ. 1'-2 1/2" TYP.
7 SECTION A-A
FOR RIGHT CUT PANELS
This drawing contains information proprietary to The Reinforced Earth Company, and is being furnished for the use of WASHINGTON DOT only in connection with this project, and the information contained herein is not to be transmitted to any other organization unless specifically authorized in writing by The Reinforced Earth Company. The Reinforced Earth Company is exclusive licensee in the United States under patents issued to Henry Vidal, and the furnishing of this drawing does not constitute an expressed or implied license under the Vidal patents.
The design contained on these drawings is based on information provided by the owner. On the basis of this information, The Reinforced Earth Company has designed, and is responsible for the internal stability of the structure only. External stability, including foundation (bearing capacity and settlement) and slope stability (sliding and rotation), is the responsibility of the owner.
The Reinforced Earth Company
"REINFORCED EARTH" is the registered trademark of The Reinforced Earth Company.
DESIGNED BY:
PROJECT ENGR:
CHECKED BY:
ENG. MANAGER
REV.
DATE
DESCRIPTION
PROJECT NAME
LOCATION
OWNER
DRAWING COVERS
PRE-APPROVAL
WASHINGTON STATE
WASHINGTON DOT
HORIZONTAL SECTIONS
DATE 03/23/04
CONTRACT NO. RE-XXXX
DRAWING NO. S3 OF S5
SCALE AS SHOWN

SECTION B–B PANEL "A"
SECTION B–B PANEL "B"
SECTION B–B PANEL "C"
SECTION B–B PANEL "D"
SECTION B–B PANEL "E"
SECTION B–B PANEL "F"
SECTION B–B PANEL "G"
SECTION B–B PANEL "H"
SECTION B–B PANEL "K"
SECTION B–B PANEL "L"
SECTION B–B PANEL "P"
SECTION B–B PANEL "Q"
SECTION B–B PANEL "M"
SECTION B–B PANEL "N"
℄ LIFTING INSERTS
FRONT FACE OF PANEL
2" CLR.
5 1/2"
TYP.
The Reinforced Earth Company
"REINFORCED EARTH" is the registered trademark of The Reinforced Earth Company.
DESIGNED BY:
PROJECT ENGR:
CHECKED BY:
ENG. MANAGER
REV.
DATE
DESCRIPTION
PROJECT NAME
LOCATION
OWNER
DRAWING COVERS
PRE-APPROVAL
WASHINGTON STATE
WASHINGTON DOT
VERTICAL SECTIONS
DATE 03/23/04
CONTRACT NO. RE-XXXX
DRAWING NO. 54 OF 55
SCALE AS SHOWN
This drawing contains information proprietary to The Reinforced Earth Company, and is being furnished for the use of WASHINGTON DOT only in connection with this project, and the information contained herein is not to be transmitted to any other organization unless specifically authorized in writing by The Reinforced Earth Company. The Reinforced Earth Company is exclusive licensee in the United States under patents issued to Henry Vidal, and the furnishing of this drawing does not constitute an expressed or implied license under the Vidal patents.
The design contained on these drawings is based on information provided by the owner. On the basis of this information, The Reinforced Earth Company has designed, and is responsible for the internal stability of the structure only. External stability, including foundation (bearing capacity and settlement) and slope stability (sliding and rotation), is the responsibility of the owner.

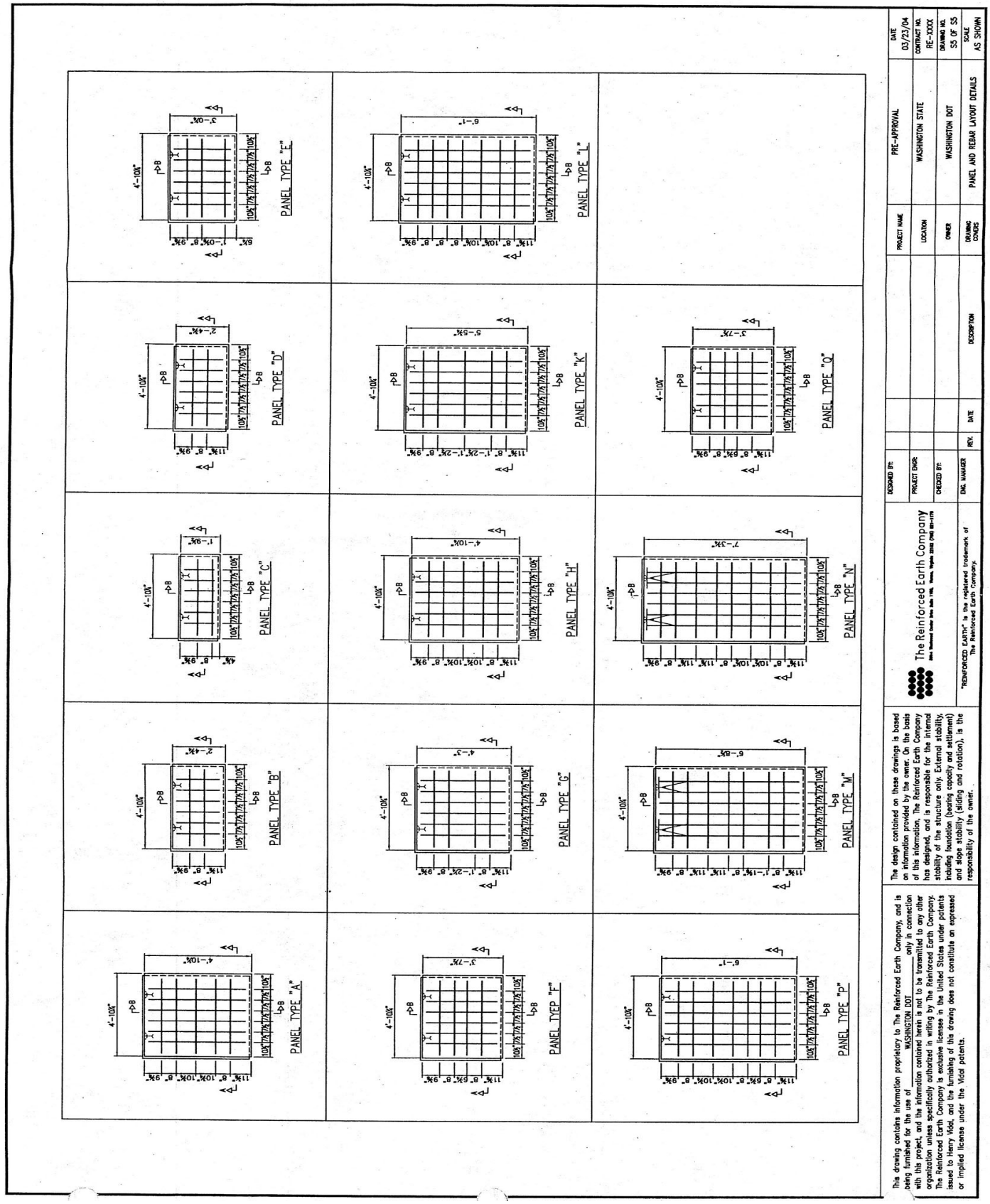
PANEL TYPE "A"
PANEL TYPE "B"
PANEL TYPE "C"
PANEL TYPE "D"
PANEL TYPE "E"
PANEL TYPE "F"
PANEL TYPE "G"
PANEL TYPE "H"
PANEL TYPE "K"
PANEL TYPE "L"
PANEL TYPE "M"
PANEL TYPE "N"
PANEL TYPE "O"
PANEL TYPE "P"
The Reinforced Earth Company
DESIGNED BY:
PROJECT DWG:
CHECKED BY:
ENG. MANAGER
REV.
DATE
DESCRIPTION
PROJECT NAME
LOCATION
OWNER
DRAWING CONTENTS
PRE-APPROVAL
WASHINGTON STATE
WASHINGTON DOT
PANEL AND REBAR LAYOUT DETAILS
DATE 03/23/04
CONTRACT NO. RE-XXXX
DRAWING NO. SS OF SS
SCALE AS SHOWN
"REINFORCED EARTH" is the registered trademark of The Reinforced Earth Company.
This drawing contains information proprietary to The Reinforced Earth Company, and is being furnished for the use of WASHINGTON DOT only in connection with this project, and the information contained herein is not to be transmitted to any other organization unless specifically authorized in writing by The Reinforced Earth Company. The Reinforced Earth Company is exclusive licensee in the United States under patents issued to Henry Vidal, and the furnishing of this drawing does not constitute an expressed or implied license under the Vidal patents.
The design contained on these drawings is based on information provided by the owner. On the basis of this information, The Reinforced Earth Company has designed, and is responsible for the internal stability of the structure only. External stability, including foundation (bearing capacity and settlement) and slope stability (sliding and rotation), is the responsibility of the owner.

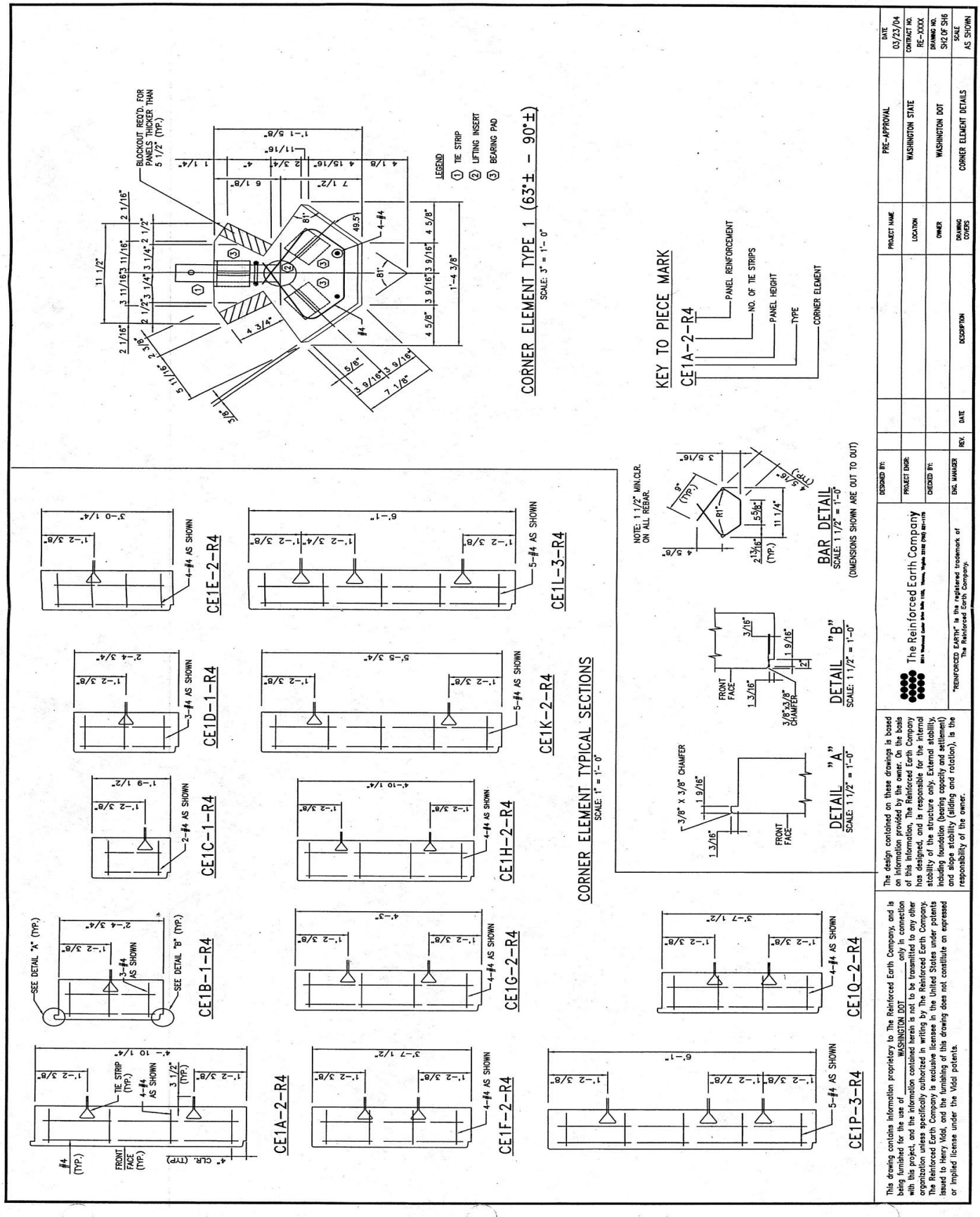
CORNER ELEMENT TYPE 1 (63°± - 90°±)
SCALE: 3" = 1'- 0"
KEY TO PIECE MARK
CE1A-2-R4
PANEL REINFORCEMENT
NO. OF TIE STRIPS
PANEL HEIGHT
TYPE
CORNER ELEMENT
CORNER ELEMENT TYPICAL SECTIONS
SCALE: 1" = 1'- 0"
CE1A-2-R4
CE1B-1-R4
CE1C-1-R4
CE1D-1-R4
CE1E-2-R4
CE1F-2-R4
CE1G-2-R4
CE1H-2-R4
CE1K-2-R4
CE1L-3-R4
CE1P-3-R4
CE1Q-2-R4
DETAIL "A"
SCALE: 1 1/2" = 1'-0"
DETAIL "B"
SCALE: 1 1/2" = 1'-0"
BAR DETAIL
SCALE: 1 1/2" = 1'-0"
(DIMENSIONS SHOWN ARE OUT TO OUT)
NOTE: 1 1/2" MIN.CLR. ON ALL REBAR.
The Reinforced Earth Company
"REINFORCED EARTH" is the registered trademark of The Reinforced Earth Company.
DESIGNED BY:
PROJECT ENGR:
CHECKED BY:
ENG. MANAGER
DATE
REV.
DESCRIPTION
PROJECT NAME
LOCATION
OWNER
DRAWING COVERS
PRE-APPROVAL
WASHINGTON STATE
WASHINGTON DOT
CORNER ELEMENT DETAILS
DATE 03/23/04
CONTRACT NO. RE-XXXX
DRAWING NO. SH2 OF SH6
SCALE AS SHOWN
This drawing contains information proprietary to The Reinforced Earth Company, and is being furnished for the use of WASHINGTON DOT only in connection with this project, and the information contained herein is not to be transmitted to any other organization unless specifically authorized in writing by The Reinforced Earth Company. The Reinforced Earth Company is exclusive licensee in the United States under patents issued to Henry Vidal, and the furnishing of this drawing does not constitute an expressed or implied license under the Vidal patents.
The design contained on these drawings is based on information provided by the owner. On the basis of this information, The Reinforced Earth Company has designed, and is responsible for the internal stability of the structure only. External stability, including foundation (bearing capacity and settlement) and slope stability (sliding and rotation), is the responsibility of the owner.

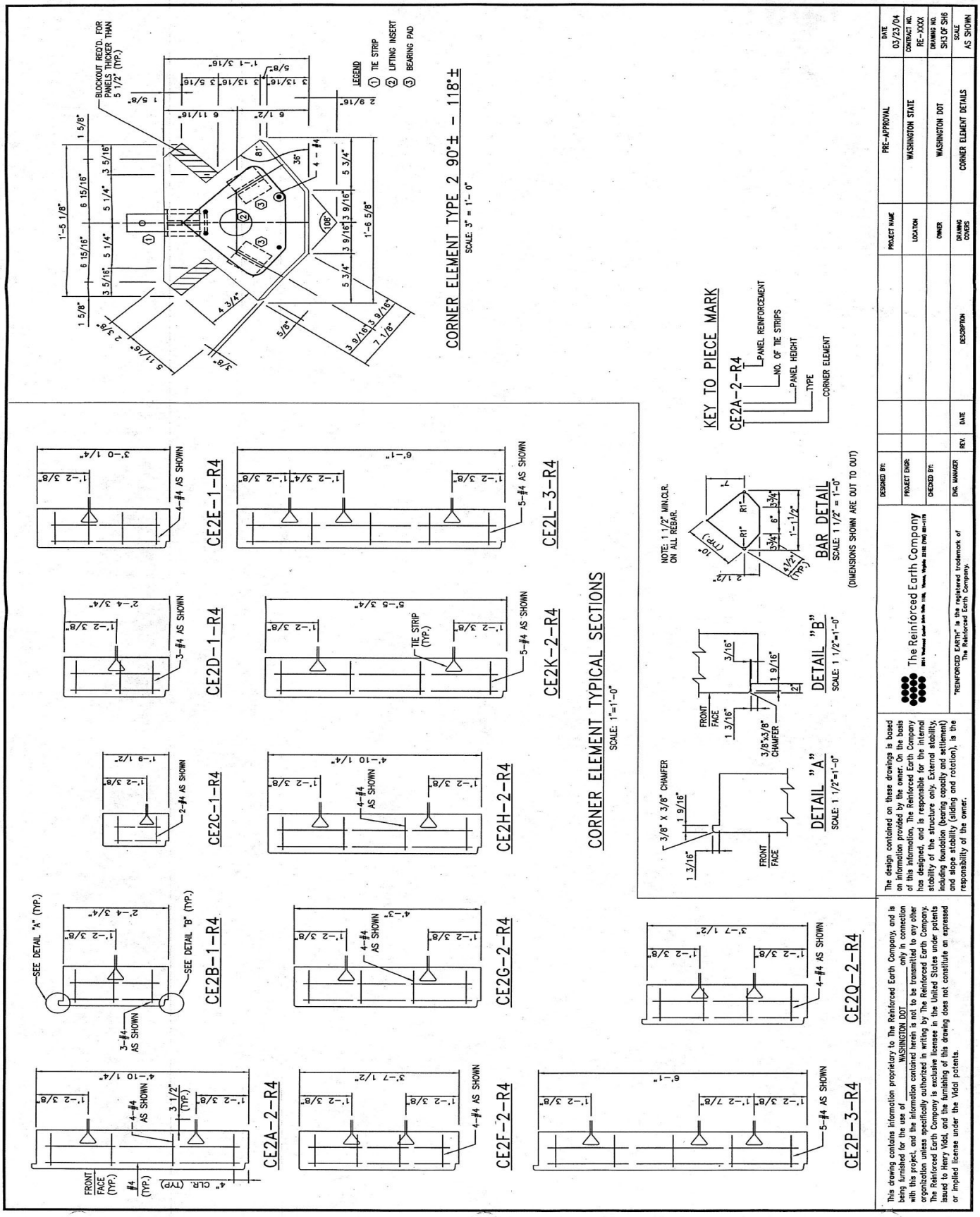
CORNER ELEMENT TYPE 2 90°± - 118°±
SCALE: 3" = 1'- 0"
BLOCKOUT REQ'D. FOR PANELS THICKER THAN 5 1/2" (TYP.)
LEGEND
① TIE STRIP
② LIFTING INSERT
③ BEARING PAD
CORNER ELEMENT TYPICAL SECTIONS
SCALE: 1"=1'-0"
CE2A-2-R4
CE2B-1-R4
CE2C-1-R4
CE2D-1-R4
CE2E-1-R4
CE2F-2-R4
CE2G-2-R4
CE2H-2-R4
CE2K-2-R4
CE2L-3-R4
CE2P-3-R4
CE2Q-2-R4
SEE DETAIL "A" (TYP.)
SEE DETAIL "B" (TYP.)
FRONT FACE (TYP.)
#4 (TYP.)
4" CLR. (TYP.)
TIE STRIP (TYP.)
DETAIL "A"
SCALE: 1 1/2"=1'-0"
DETAIL "B"
SCALE: 1 1/2"=1'-0"
NOTE: 1 1/2" MIN.CLR. ON ALL REBAR.
BAR DETAIL
SCALE: 1 1/2" = 1'-0"
(DIMENSIONS SHOWN ARE OUT TO OUT)
KEY TO PIECE MARK
CE2A-2-R4
PANEL REINFORCEMENT
NO. OF TIE STRIPS
PANEL HEIGHT
TYPE
CORNER ELEMENT
The Reinforced Earth Company
"REINFORCED EARTH" is the registered trademark of The Reinforced Earth Company.
DESIGNED BY:
PROJECT ENGR:
CHECKED BY:
ENG. MANAGER
REV.
DATE
DESCRIPTION
PROJECT NAME
LOCATION
OWNER
DRAWING COVERS
PRE-APPROVAL
WASHINGTON STATE
WASHINGTON DOT
CORNER ELEMENT DETAILS
DATE 03/23/04
CONTRACT NO. RE-XXXX
DRAWING NO. SH3 OF SH6
SCALE AS SHOWN
The design contained on these drawings is based on information provided by the owner. On the basis of this information, The Reinforced Earth Company has designed, and is responsible for the internal stability of the structure only. External stability, including foundation (bearing capacity and settlement) and slope stability (sliding and rotation), is the responsibility of the owner.
This drawing contains information proprietary to The Reinforced Earth Company, and is being furnished for the use of WASHINGTON DOT only in connection with this project, and the information contained herein is not to be transmitted to any other organization unless specifically authorized in writing by The Reinforced Earth Company. The Reinforced Earth Company is exclusive licensee in the United States under patents issued to Henry Vidal, and the furnishing of this drawing does not constitute an expressed or implied license under the Vidal patents.

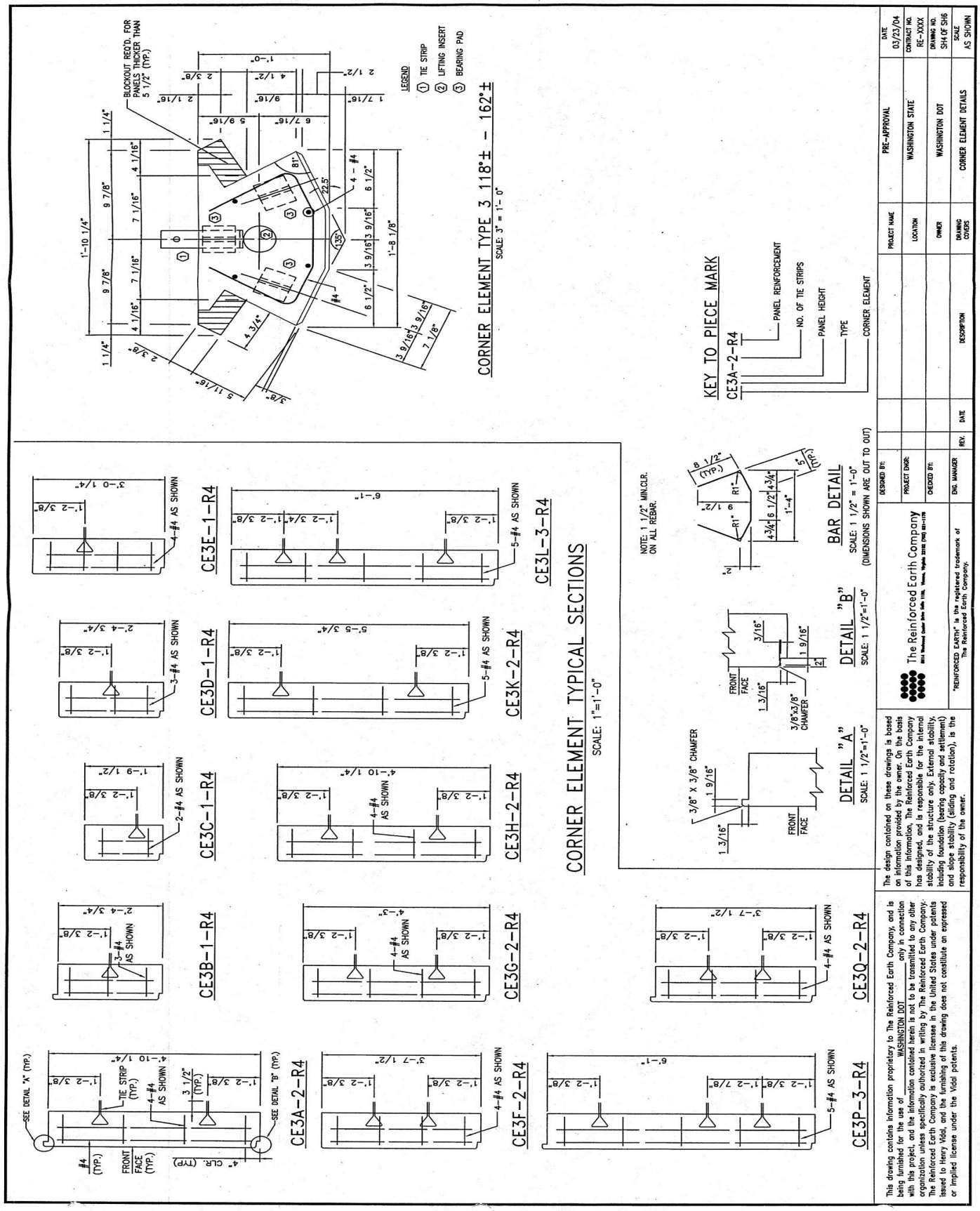
CORNER ELEMENT TYPE 3 118°± - 162°±
SCALE: 3" = 1'-0"
LEGEND
① TIE STRIP
② LIFTING INSERT
③ BEARING PAD
BLOCKOUT REQ'D. FOR PANELS THICKER THAN 5 1/2" (TYP.)
KEY TO PIECE MARK
CE3A-2-R4
PANEL REINFORCEMENT
NO. OF TIE STRIPS
PANEL HEIGHT
TYPE
CORNER ELEMENT
CORNER ELEMENT TYPICAL SECTIONS
SCALE: 1"=1'-0"
CE3A-2-R4
CE3B-1-R4
CE3C-1-R4
CE3D-1-R4
CE3E-1-R4
CE3F-2-R4
CE3G-2-R4
CE3H-2-R4
CE3K-2-R4
CE3L-3-R4
CE3P-3-R4
CE3Q-2-R4
NOTE: 1 1/2" MIN.CLR. ON ALL REBAR.
DETAIL "A"
SCALE: 1 1/2"=1'-0"
DETAIL "B"
SCALE: 1 1/2"=1'-0"
BAR DETAIL
SCALE: 1 1/2" = 1'-0"
(DIMENSIONS SHOWN ARE OUT TO OUT)
The Reinforced Earth Company
"REINFORCED EARTH" is the registered trademark of The Reinforced Earth Company.
DESIGNED BY:
PROJECT ENGR:
CHECKED BY:
ENG. MANAGER
REV.
DATE
DESCRIPTION
PROJECT NAME
LOCATION
OWNER
DRAWING COVERS
PRE-APPROVAL
WASHINGTON STATE
WASHINGTON DOT
CORNER ELEMENT DETAILS
DATE 03/23/04
CONTRACT NO. RE-XXXX
DRAWING NO. SH4 OF SH6
SCALE AS SHOWN
This drawing contains information proprietary to The Reinforced Earth Company, and is being furnished for the use of WASHINGTON DOT only in connection with this project, and the information contained herein is not to be transmitted to any other organization unless specifically authorized in writing by The Reinforced Earth Company. The Reinforced Earth Company is exclusive licensee in the United States under patents issued to Henry Vidal, and the furnishing of this drawing does not constitute an expressed or implied license under the Vidal patents.
The design contained on these drawings is based on information provided by the owner. On the basis of this information, The Reinforced Earth Company has designed, and is responsible for the internal stability of the structure only. External stability, including foundation (bearing capacity and settlement) and slope stability (sliding and rotation), is the responsibility of the owner.

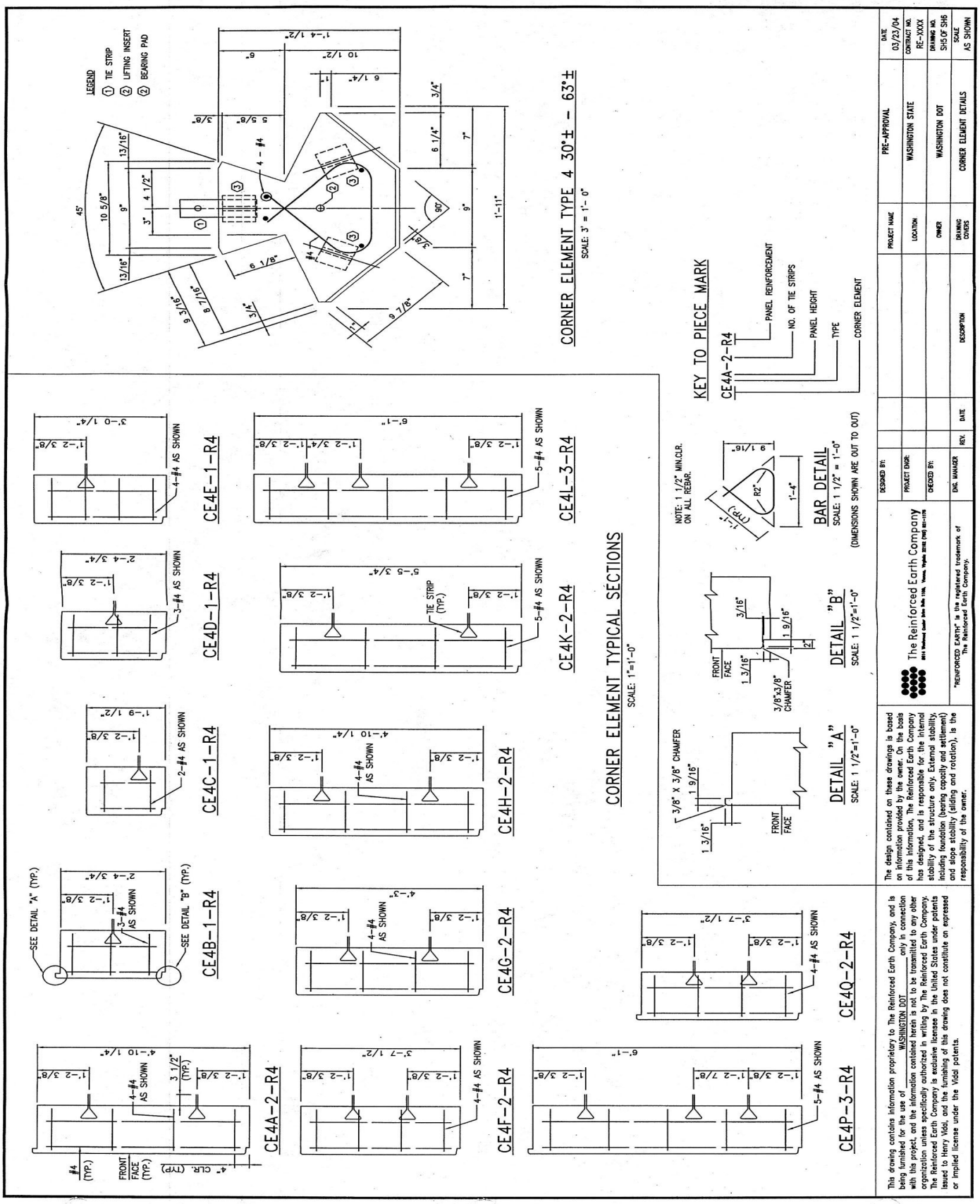
LEGEND
① TIE STRIP
② LIFTING INSERT
③ BEARING PAD
CORNER ELEMENT TYPE 4 30°± - 63°±
SCALE: 3" = 1'-0"
KEY TO PIECE MARK
CE4A-2-R4
PANEL REINFORCEMENT
NO. OF TIE STRIPS
PANEL HEIGHT
TYPE
CORNER ELEMENT
CORNER ELEMENT TYPICAL SECTIONS
SCALE: 1"=1'-0"
CE4E-1-R4
CE4L-3-R4
CE4D-1-R4
CE4K-2-R4
CE4C-1-R4
CE4H-2-R4
CE4B-1-R4
CE4G-2-R4
CE4F-2-R4
CE4Q-2-R4
CE4P-3-R4
CE4A-2-R4
DETAIL "A"
SCALE: 1 1/2"=1'-0"
DETAIL "B"
SCALE: 1 1/2"=1'-0"
BAR DETAIL
SCALE: 1 1/2" = 1'-0"
(DIMENSIONS SHOWN ARE OUT TO OUT)
NOTE: 1 1/2" MIN.CLR. ON ALL REBAR.
The Reinforced Earth Company
"REINFORCED EARTH" is the registered trademark of The Reinforced Earth Company.
DESIGNED BY:
PROJECT ENGR:
CHECKED BY:
ENG. MANAGER
REV.
DATE
DESCRIPTION
PROJECT NAME
LOCATION
OWNER
DRAWING COVERS
PRE-APPROVAL
WASHINGTON STATE
WASHINGTON DOT
CORNER ELEMENT DETAILS
DATE 03/23/04
CONTRACT NO. RE-XXXX
DRAWING NO. SH5 OF SH6
SCALE AS SHOWN
This drawing contains information proprietary to The Reinforced Earth Company, and is being furnished for the use of WASHINGTON DOT only in connection with this project, and the information contained herein is not to be transmitted to any other organization unless specifically authorized in writing by The Reinforced Earth Company. The Reinforced Earth Company is exclusive licensee in the United States under patents issued to Henry Vidal, and the furnishing of this drawing does not constitute an expressed or implied license under the Vidal patents.
The design contained on these drawings is based on information provided by the owner. On the basis of this information, The Reinforced Earth Company has designed, and is responsible for the internal stability of the structure only. External stability, including foundation (bearing capacity and settlement) and slope stability (sliding and rotation), is the responsibility of the owner.

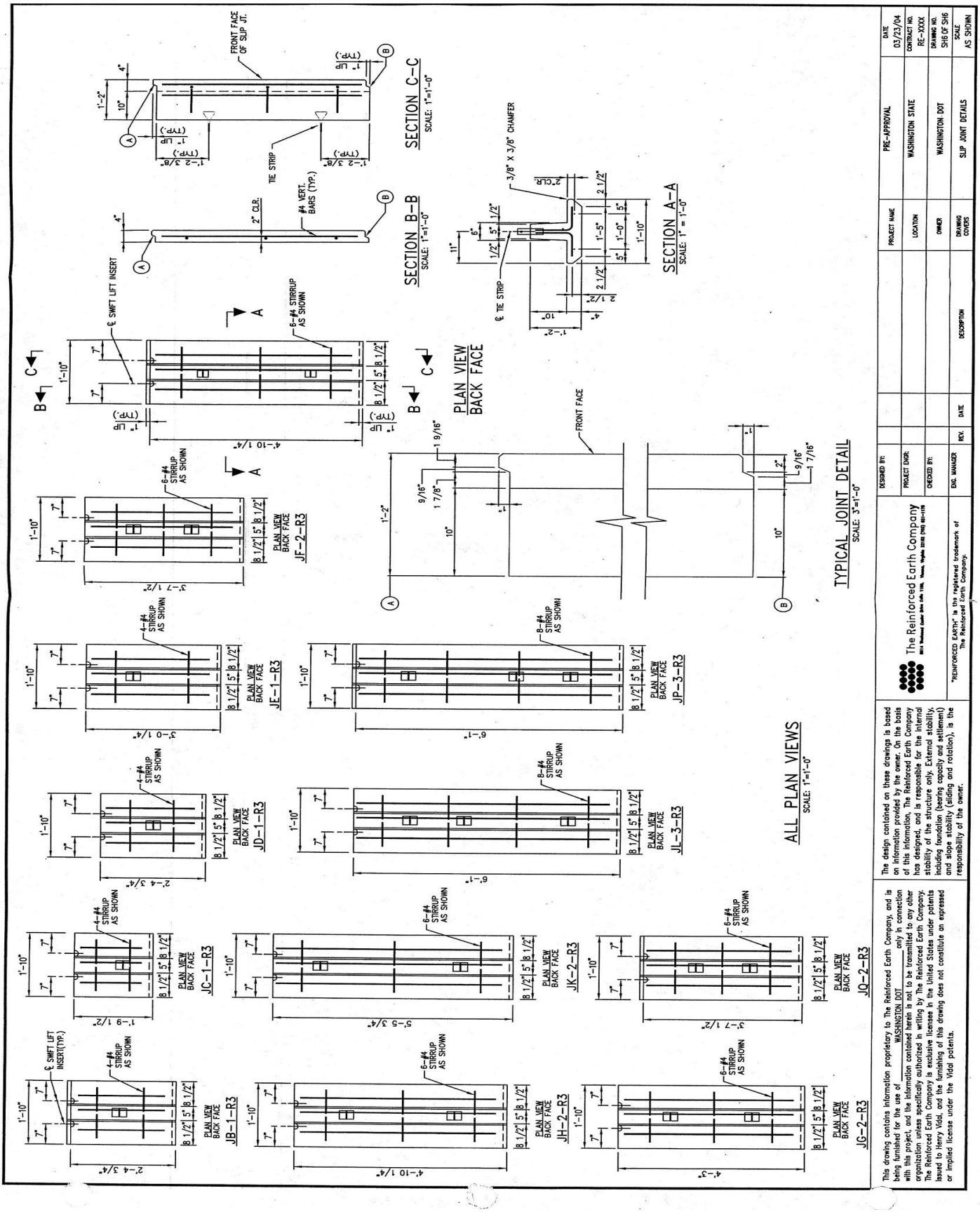
SECTION C–C
SCALE: 1"=1'-0"
SECTION B–B
SCALE: 1"=1'-0"
SECTION A–A
SCALE: 1" = 1'-0"
PLAN VIEW
BACK FACE
TYPICAL JOINT DETAIL
SCALE: 3"=1'-0"
ALL PLAN VIEWS
SCALE: 1"=1'-0"
JF–2–R3
JE–1–R3
JP–3–R3
JD–1–R3
JL–3–R3
JC–1–R3
JK–2–R3
JQ–2–R3
JB–1–R3
JH–2–R3
JG–2–R3
The Reinforced Earth Company
PRE–APPROVAL
WASHINGTON STATE
WASHINGTON DOT
SLIP JOINT DETAILS
03/23/04
RE–XXXX
SH6 OF SH6
AS SHOWN

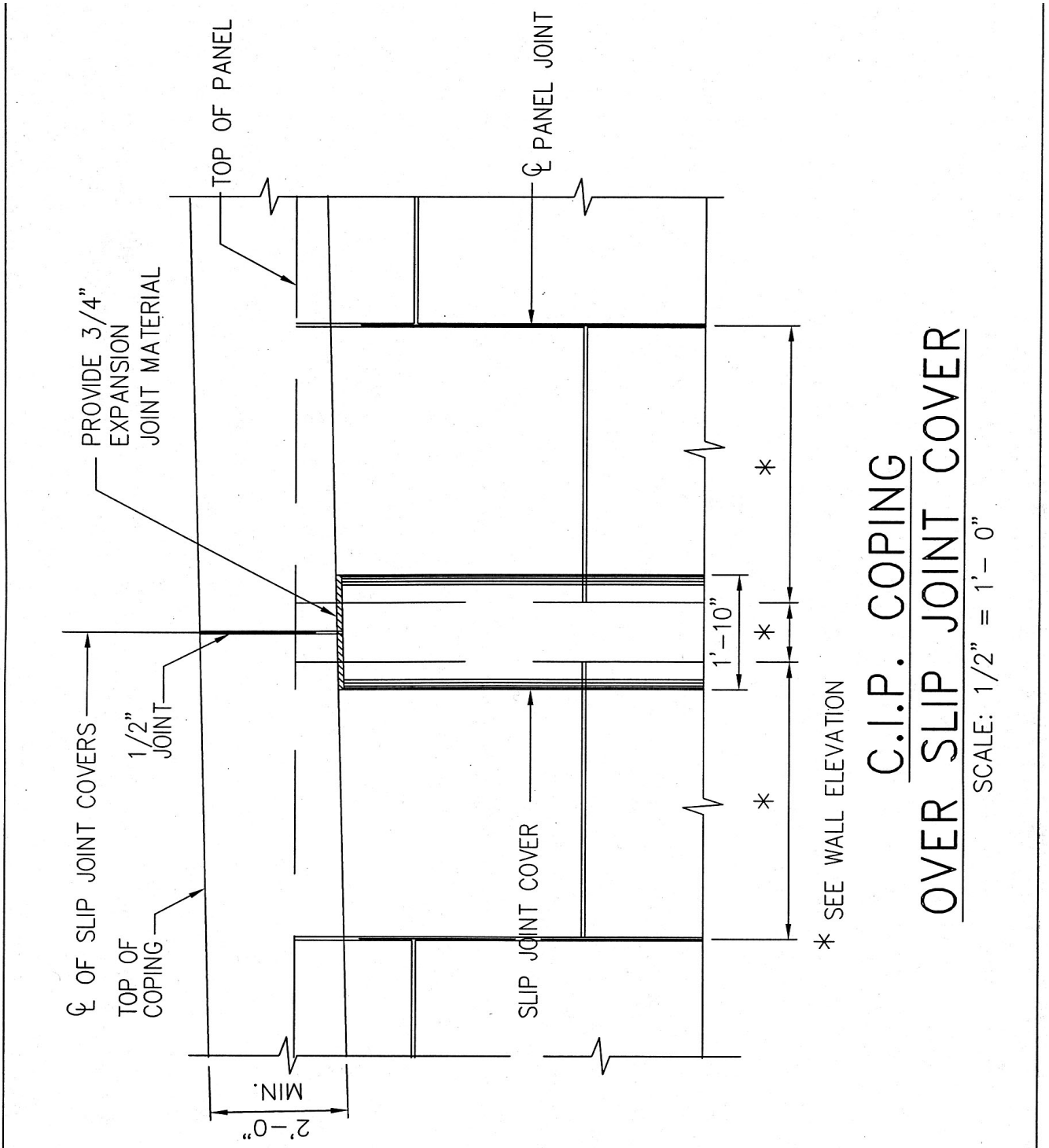
TOP OF PANEL
℄ PANEL JOINT
PROVIDE 3/4" EXPANSION JOINT MATERIAL
1/2" JOINT
℄ OF SLIP JOINT COVERS
TOP OF COPING
SLIP JOINT COVER
1'-10"
2'-0" MIN.
* SEE WALL ELEVATION
C.I.P. COPING
OVER SLIP JOINT COVER
SCALE: 1/2" = 1'- 0"
The Reinforced Earth Company
8614 Westwood Center Drive Suite 1100, Vienna, Virginia 22182 (703) 821-1175
DESCRIPTION
SLIP JOINT COVER PARTIAL ELEVATION W/ C.I.P. COPING SQUARE PANELS
DATE : 3/04
SHEET NO. 0020

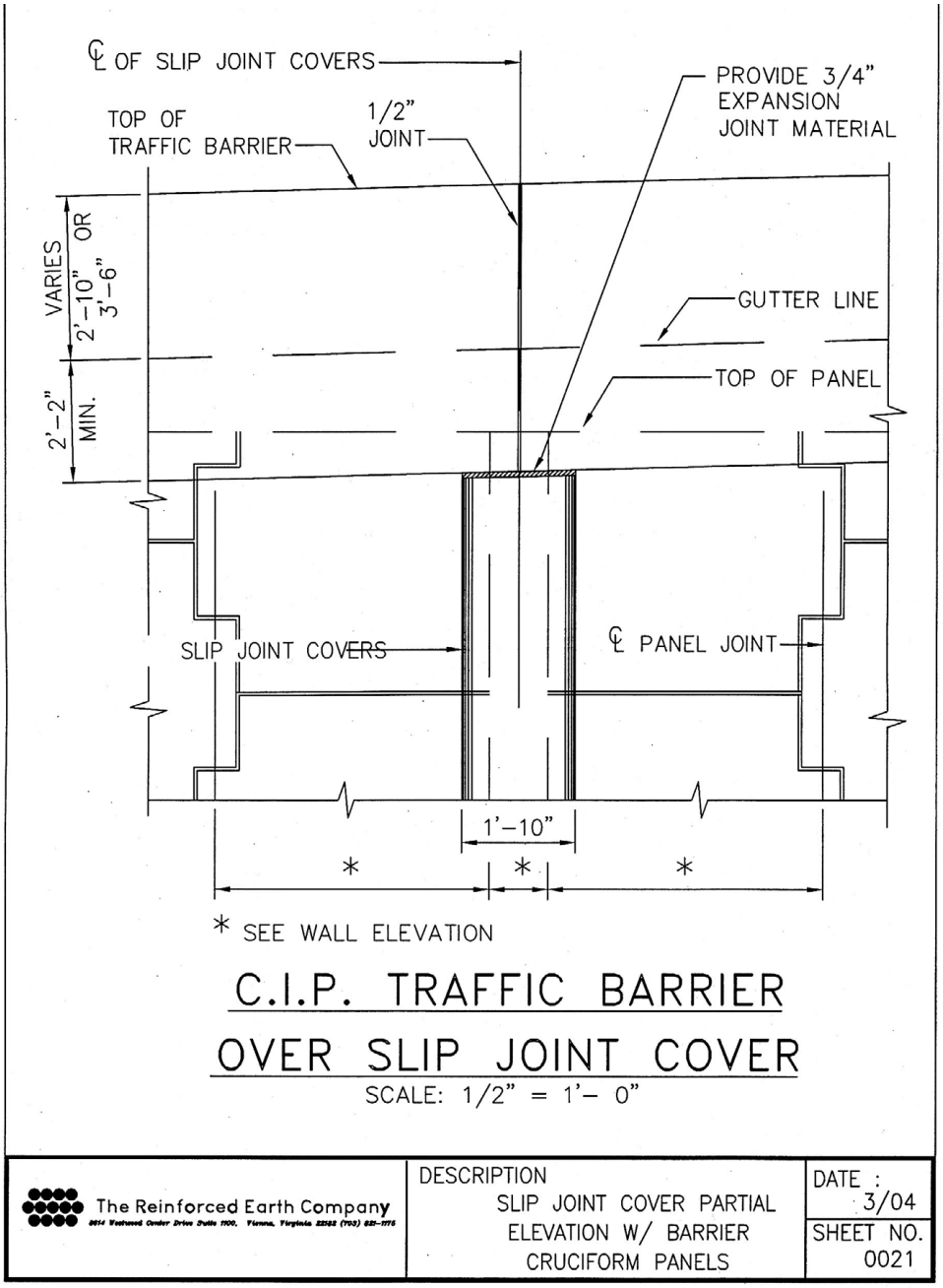
℄ OF SLIP JOINT COVERS
TOP OF TRAFFIC BARRIER
1/2" JOINT
PROVIDE 3/4" EXPANSION JOINT MATERIAL
VARIES 2'-10" OR 3'-6"
2'-2" MIN.
GUTTER LINE
TOP OF PANEL
SLIP JOINT COVERS
℄ PANEL JOINT
1'-10"
*
*
*
* SEE WALL ELEVATION
C.I.P. TRAFFIC BARRIER
OVER SLIP JOINT COVER
SCALE: 1/2" = 1'- 0"
The Reinforced Earth Company
DESCRIPTION
SLIP JOINT COVER PARTIAL ELEVATION W/ BARRIER CRUCIFORM PANELS
DATE : 3/04
SHEET NO. 0021

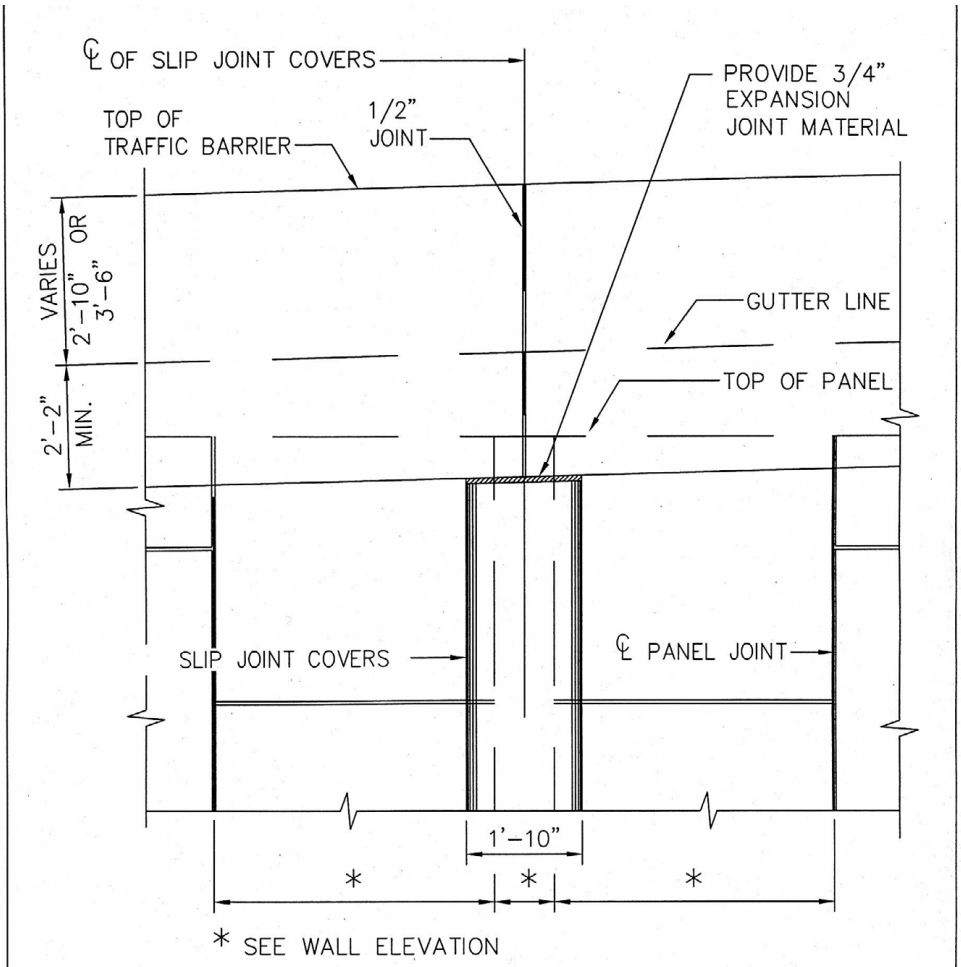
℄ OF SLIP JOINT COVERS
TOP OF TRAFFIC BARRIER
1/2" JOINT
PROVIDE 3/4" EXPANSION JOINT MATERIAL
VARIES 2'-10" OR 3'-6"
2'-2" MIN.
GUTTER LINE
TOP OF PANEL
SLIP JOINT COVERS
℄ PANEL JOINT
1'-10"
*
*
*
* SEE WALL ELEVATION
C.I.P. TRAFFIC BARRIER
OVER SLIP JOINT COVER
SCALE: 1/2" = 1'- 0"
The Reinforced Earth Company
DESCRIPTION
SLIP JOINT COVER PARTIAL ELEVATION W/ BARRIER SQUARE PANELS
DATE : 3/04
SHEET NO. 0022

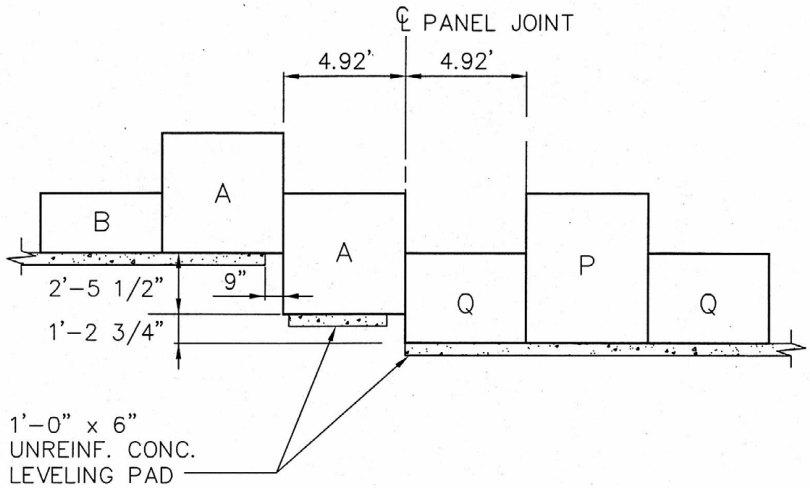

TYPICAL LEVELING PAD STEP DETAIL

NOT TO SCALE

The Reinforced Earth Company 8614 Westwood Center Drive Suite 1100, Vienna, Virginia 22182 (703) 821-1175	DESCRIPTION SQUARE PANELS – LEVELING PAD STEP DETAIL	DATE : 3/04 SHEET NO. 0024

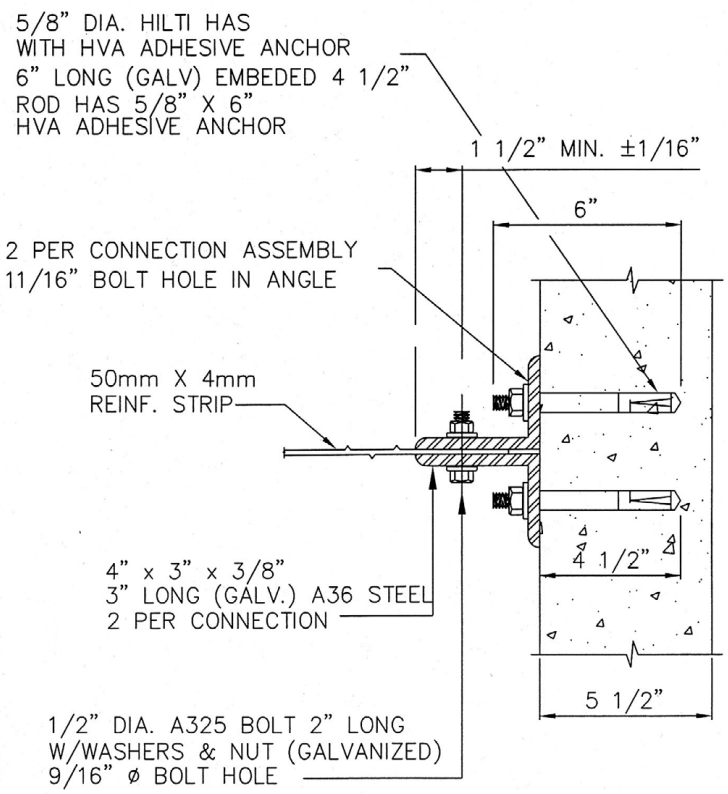

CLIP ANGLE DETAIL

SCALE: 3" = 1'-0"

The Reinforced Earth Company 8614 Westwood Center Drive Suite 1100, Vienna, Virginia 22182 (703) 821-1770	DESCRIPTION CLIP ANGLE DETAIL	DATE : 3/04
		SHEET NO. 0025

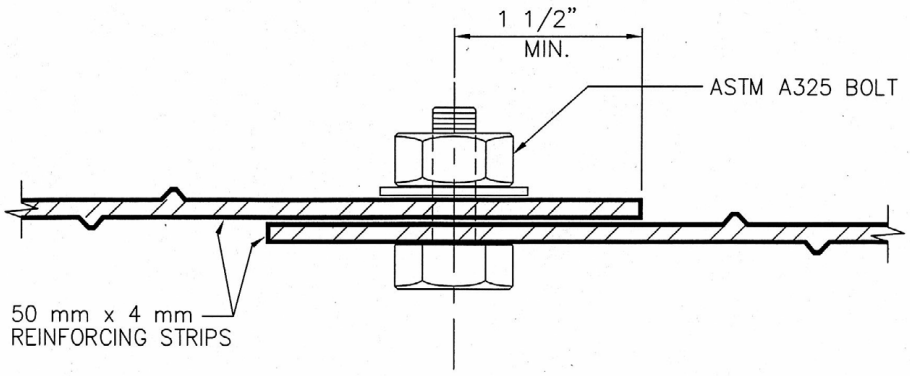

SPLICE CONNECTION DETAIL A

SCALE NTS

NOTES:

1. SPLICE PLATE CONNECTIONS REQUIRED ON ALL REINFORCING STRIPS BETWEEN LENGTH OF 32 FEET AND 40 FEET .

The Reinforced Earth Company 8614 Westwood Center Drive Suite 1100, Vienna, Virginia 22182 (703) 821-1175	DESCRIPTION SINGLE BOLT SPLICE CONNECTION DETAIL	DATE : 3/04 SHEET NO. 0026

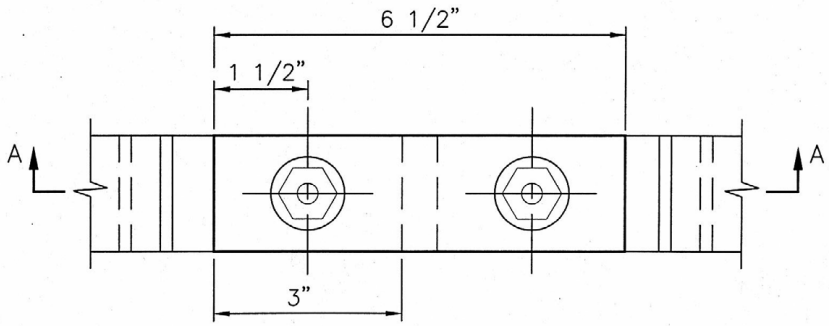

PLAN VIEW

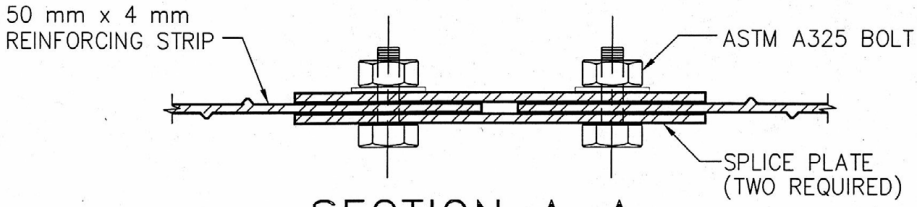

SECTION A–A

SPLICE CONNECTION DETAIL B

SCALE 1:2

NOTES:

1. SPLICE PLATE CONNECTIONS REQUIRED ON ALL REINFORCING STRIPS EXCEEDING LENGTH OF 40 FEET.

The Reinforced Earth Company 8614 Westwood Center Drive Suite 1100, Vienna, Virginia 22182 (703) 821-1175	DESCRIPTION DOUBLE BOLTED SPLICE CONNECTION DETAIL W/ PLATES	DATE : 3/04 SHEET NO. 0027

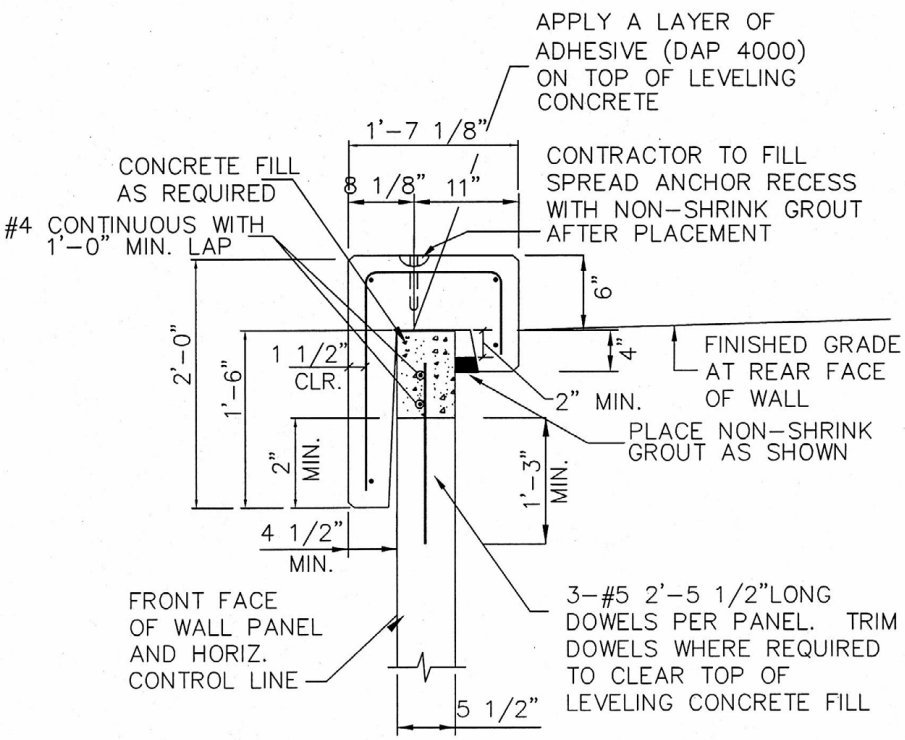

PRECAST COPING SECTION TYPE 1

SCALE: NTS

NOTE:
STANDARD COPING UNIT IS 10-0' LONG.

The Reinforced Earth Company 8614 Westwood Center Drive Suite 1100, Vienna, Virginia 22182 (703) 821-1175	DESCRIPTION PRECAST COPING DETAIL – TYPE 1	DATE : 3/04
		SHEET NO. 0028

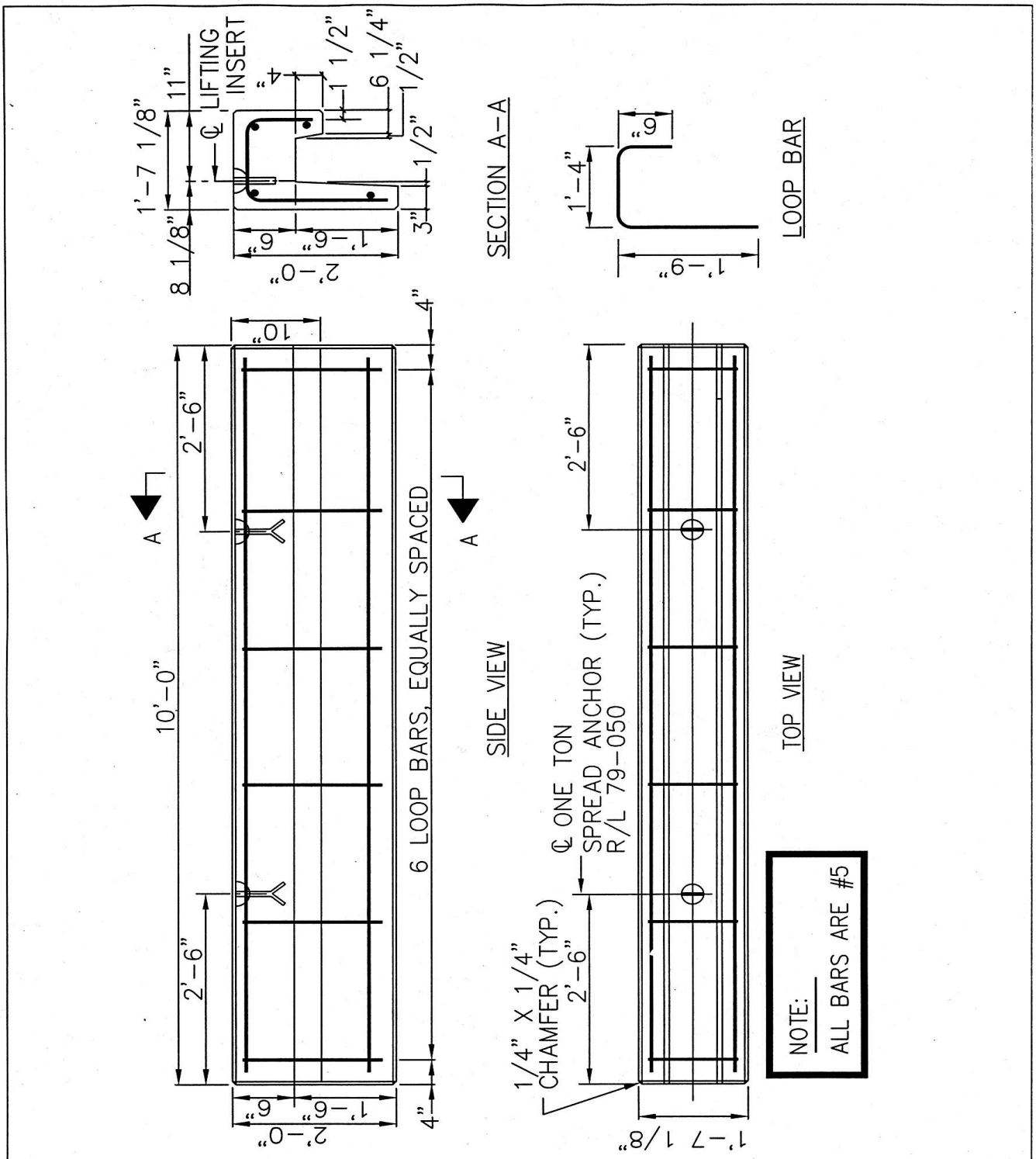

The Reinforced Earth Company 8614 Westwood Center Drive Suite 1100, Vienna, Virginia 22182 (703) 821-1776	DESCRIPTION PRECAST COPING FABRICATION DRAWING – TYPE 1	DATE : 3/04 SHEET NO. 0029

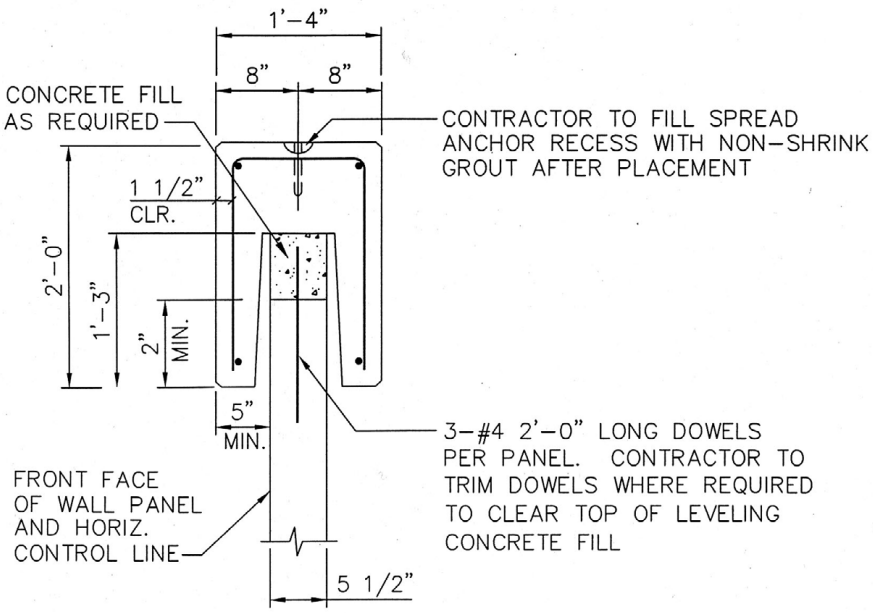

PRECAST COPING SECTION TYPE 2

SCALE: 1" = 1'– 0"

NOTE:

STANDARD COPING UNIT IS 10'–0" LONG WITH SQUARE ENDS.

The Reinforced Earth Company 8614 Westwood Center Drive Suite 1100, Vienna, Virginia 22182 (703) 821–1175	DESCRIPTION PRECAST COPING DETAIL – TYPE 2	DATE : 3/04
		SHEET NO. 0030

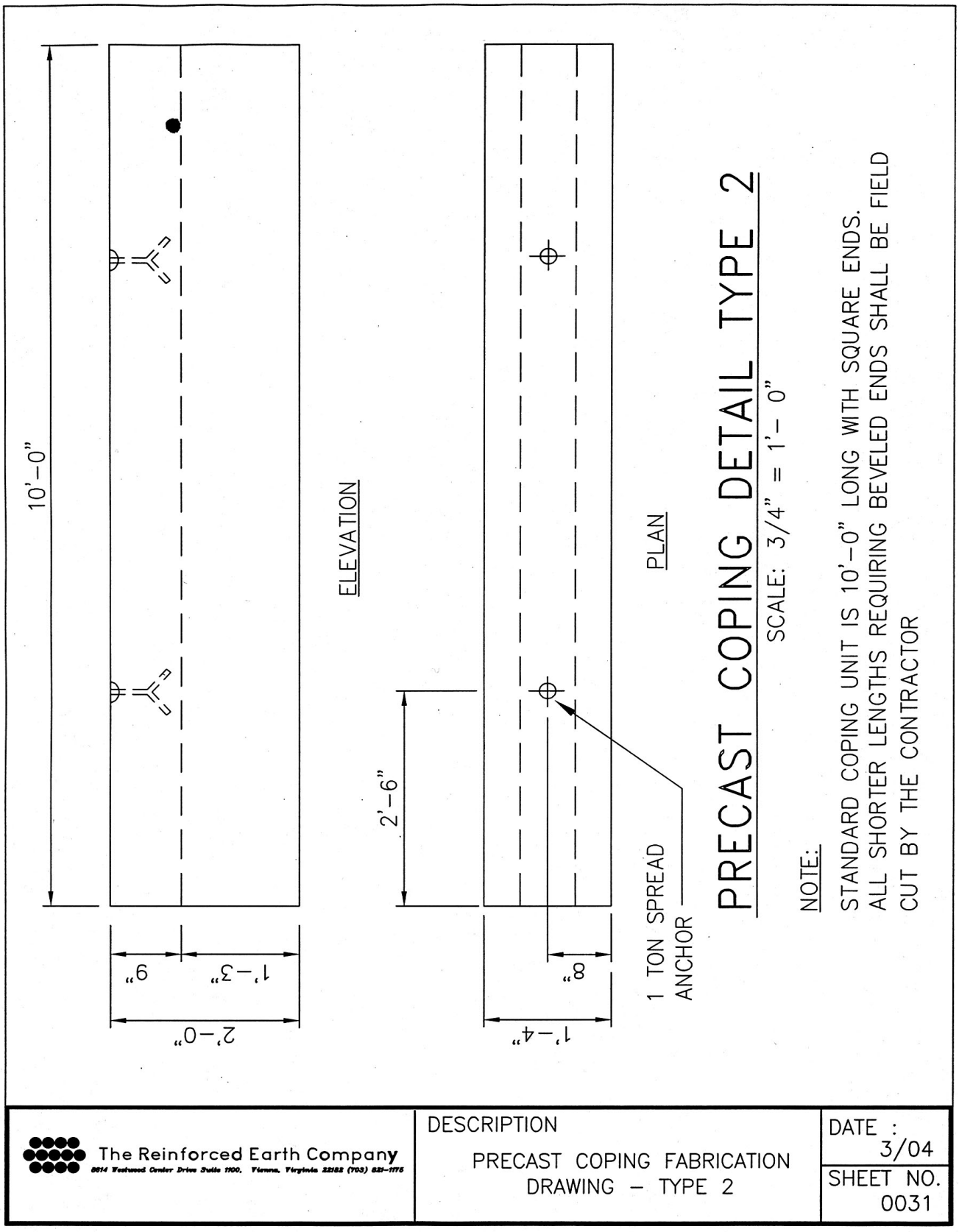

PRECAST COPING DETAIL TYPE 2

SCALE: 3/4" = 1'- 0"

NOTE:

STANDARD COPING UNIT IS 10'-0" LONG WITH SQUARE ENDS.
ALL SHORTER LENGTHS REQUIRING BEVELED ENDS SHALL BE FIELD CUT BY THE CONTRACTOR

The Reinforced Earth Company 8614 Westwood Center Drive Suite 1100, Vienna, Virginia 22182 (703) 821-1175	DESCRIPTION PRECAST COPING FABRICATION DRAWING – TYPE 2	DATE : 3/04 SHEET NO. 0031

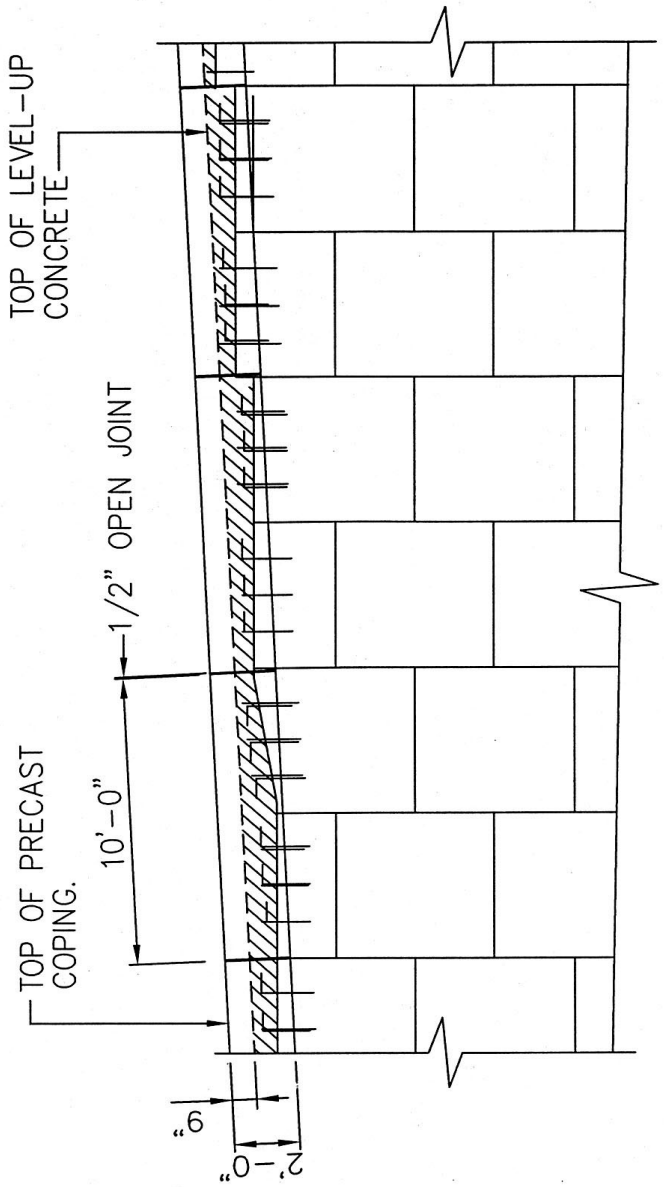

PRECAST COPING PARTIAL ELEVATION

SCALE: 3/16" = 1'-0"

The Reinforced Earth Company 8614 Westwood Center Drive Suite 1100, Vienna, Virginia 22182 (703) 821-1776	DESCRIPTION PRECAST COPING PARTIAL ELEVATION	DATE : 3/04
	SQUARE PANELS	SHEET NO. 0033

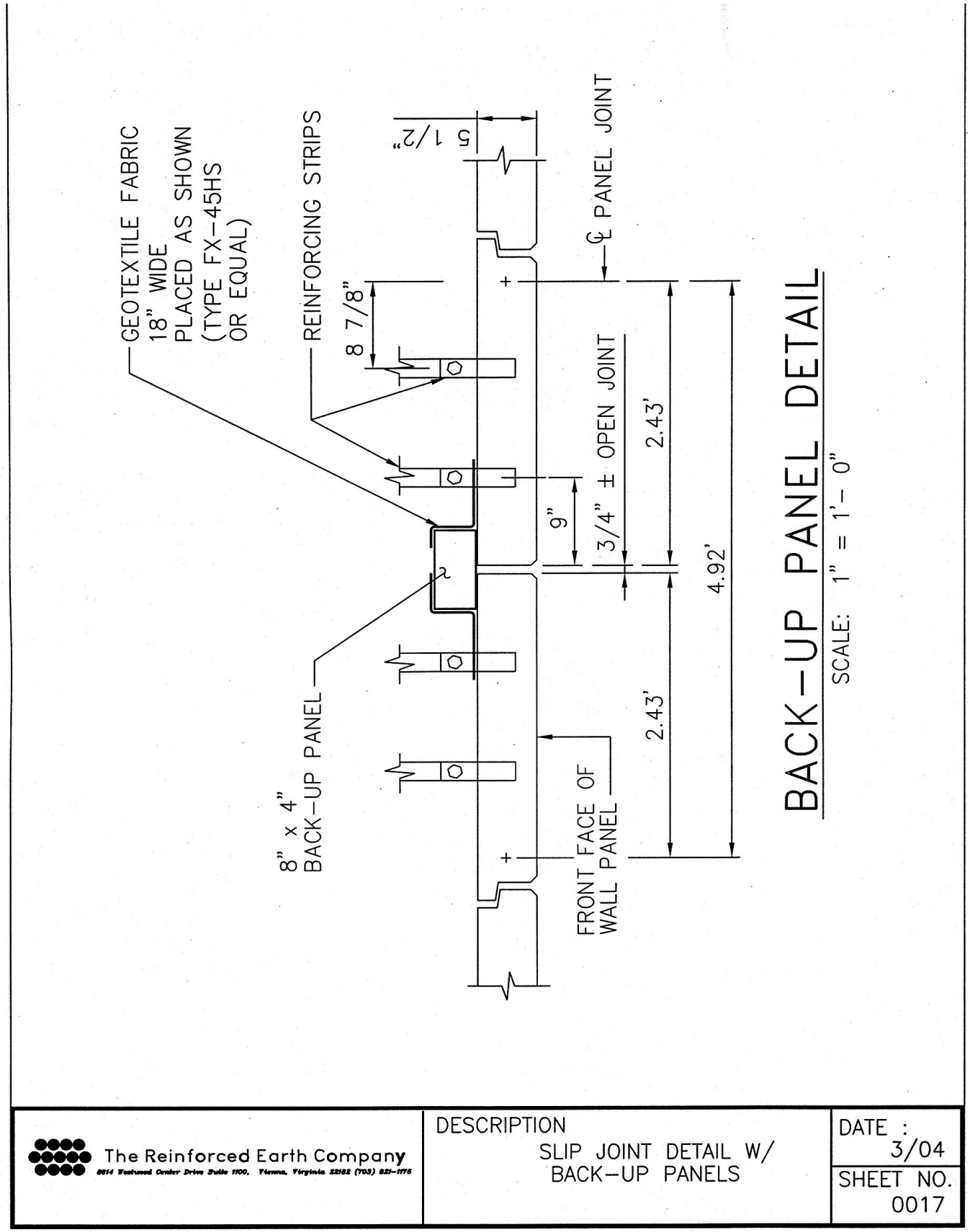
GEOTEXTILE FABRIC
18" WIDE
PLACED AS SHOWN
(TYPE FX-45HS
OR EQUAL)
REINFORCING STRIPS
5 1/2"
℄ PANEL JOINT
8 7/8"
9"
3/4" ± OPEN JOINT
2.43'
4.92'
2.43'
8" x 4"
BACK-UP PANEL
FRONT FACE OF
WALL PANEL
BACK-UP PANEL DETAIL
SCALE: 1" = 1'- 0"
The Reinforced Earth Company
8614 Westwood Center Drive Suite 1100, Vienna, Virginia 22182 (703) 821-1175
DESCRIPTION
SLIP JOINT DETAIL W/
BACK-UP PANELS
DATE : 3/04
SHEET NO. 0017

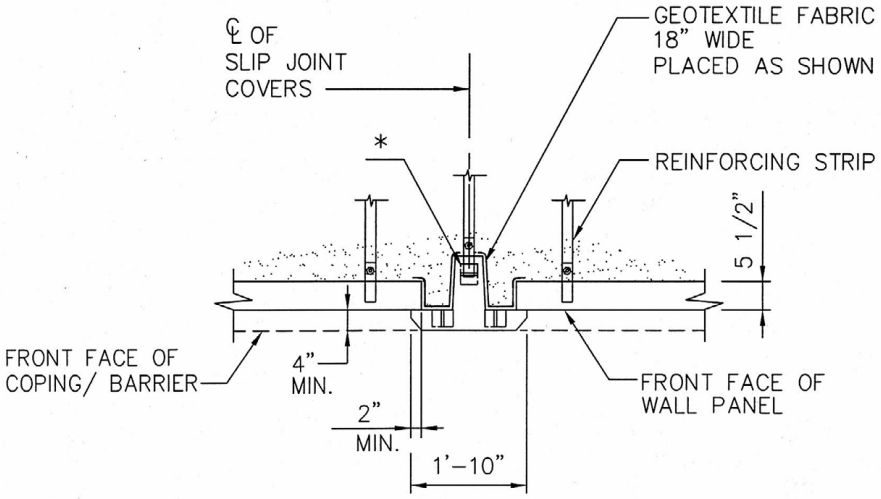

SLIP JOINT COVER DETAIL

SCALE: 1/2" = 1'- 0"

* THREE BEARING PADS PER UNIT, BASE STEM OF BEARING PAD SHALL BE FIELD CUT TO FIT FLAT ON TOP OF CORNER ELEMENT. FRONT PADS SHALL BE PLACED ON INSIDE EDGE OF LIP.

The Reinforced Earth Company 8614 Westwood Center Drive Suite 1100, Vienna, Virginia 22182 (703) 821-1175	DESCRIPTION SLIP JOINT COVER DETAIL	DATE : 3/04
		SHEET NO. 0018

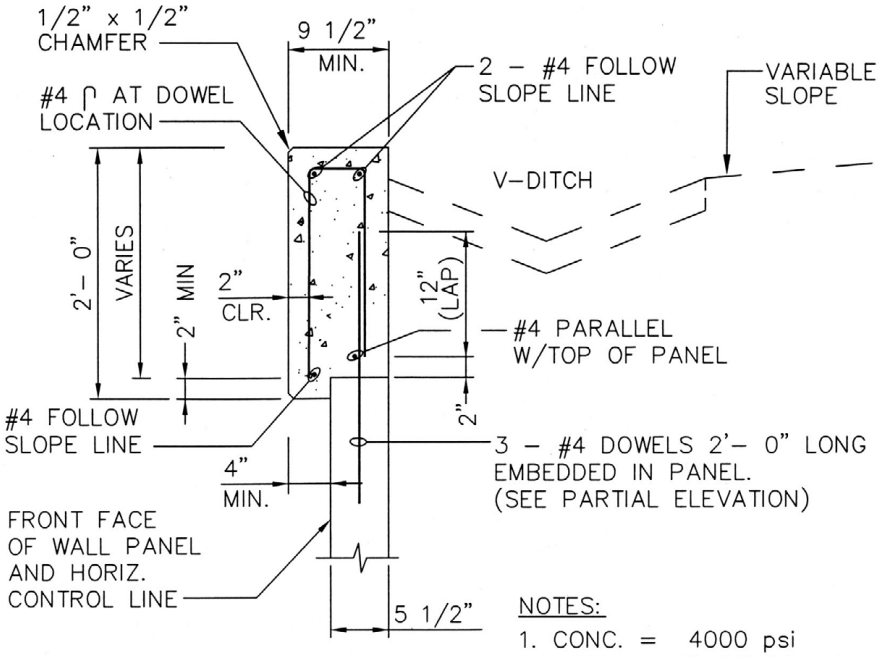

C.I.P. CONC. COPING W/DITCH

SCALE: 1" = 1'– 0"

The Reinforced Earth Company 8614 Westwood Center Drive Suite 1100, Vienna, Virginia 22182 (703) 821-1175	DESCRIPTION C.I.P. COPING W/ DITCH DETAIL	DATE : 3/04
		SHEET NO. 0010

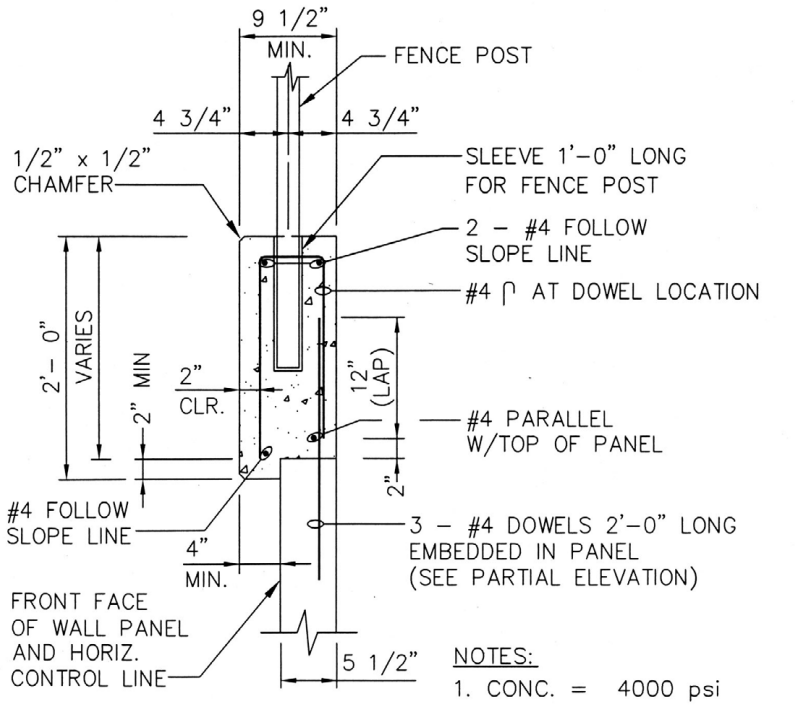

C.I.P. CONC. COPING W/FENCE

SCALE: 1" = 1'- 0"

The Reinforced Earth Company	DESCRIPTION C.I.P. COPING W/ FENCE DETAIL	DATE : 3/04
		SHEET NO. 0011

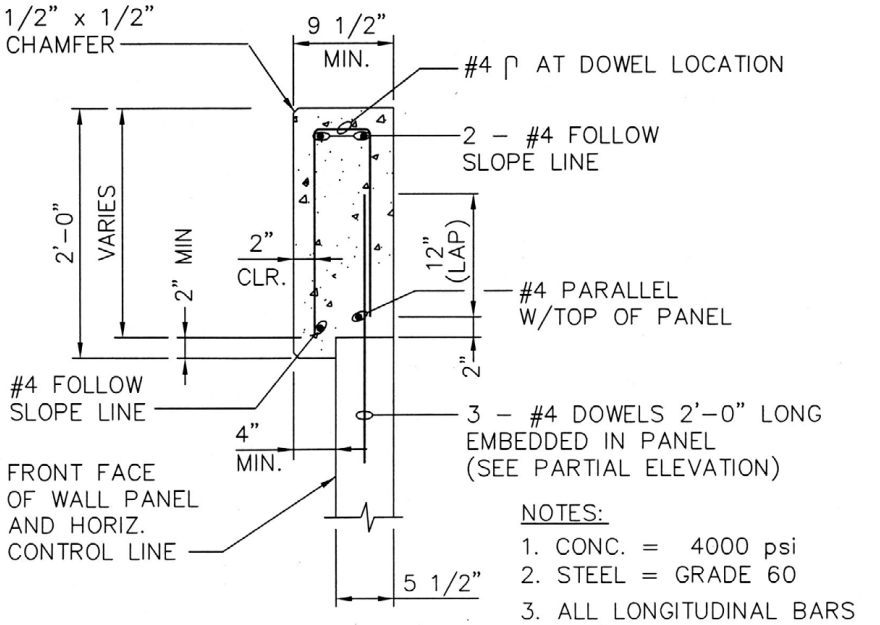

NOTES:

1. CONC. = 4000 psi
2. STEEL = GRADE 60
3. ALL LONGITUDINAL BARS ARE #4
4. EXPANSION JOINTS (1/2") EVERY 2 PANEL UNITS

C.I.P. CONC. COPING

SCALE: 1" = 1'– 0"

The Reinforced Earth Company 8614 Westwood Center Drive Suite 1100, Vienna, Virginia 22182 (703) 821-1175	DESCRIPTION C.I.P. COPING DETAIL	DATE : 3/04
		SHEET NO. 0009

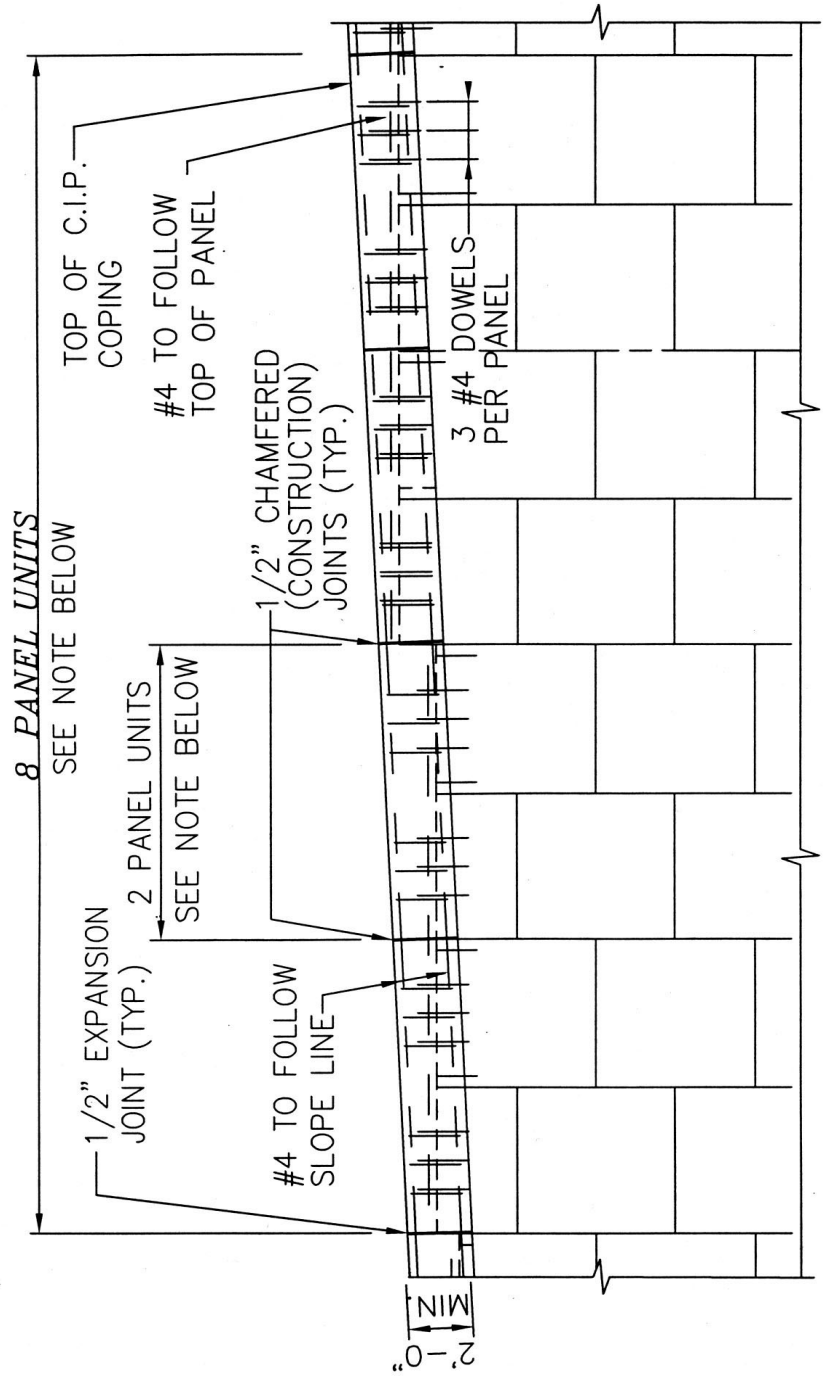

C.I.P. COPING – PARTIAL ELEVATION

SCALE: 3/16" = 1'- 0"

NOTE:

ONE-HALF INCH CHAMFERED (CONSTRUCTION) JOINTS SHOULD BE PLACED AT EVERY TWO-PANEL INTERVAL COINSIDING WITH EVERY OTHER ℄ OF PANEL JOINT. ONE-HALF INCH EXPANSION JOINTS SHOULD BE PLACED AT EVERY EIGHT-PANEL INTERVAL WHEREBY ALL LONGITUDINAL REINFORCEMENT SHALL BE FIELD CUT TWO INCHES (2") SHORT OF EACH SIDE OF THE EXPANSION JOINTS.

The Reinforced Earth Company 8614 Westwood Center Drive Suite 1100, Vienna, Virginia 22182 (703) 821-1175	DESCRIPTION C.I.P. COPING PARTIAL ELEVATION	DATE : 3/04
	SQUARE PANELS	SHEET NO. 0013

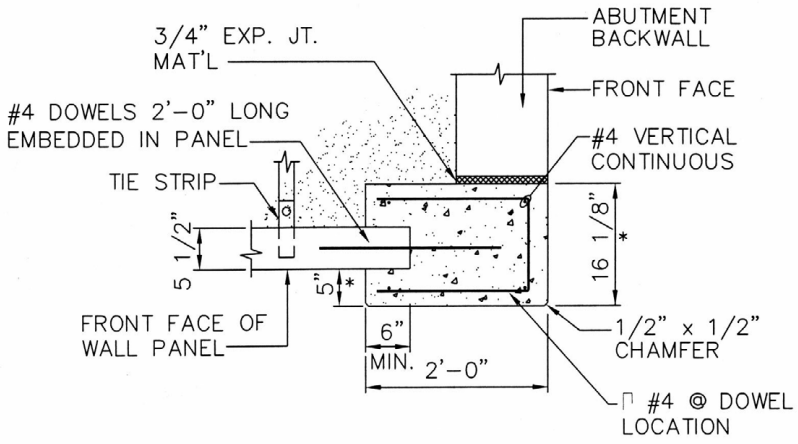

CONC VERTICAL COPING DETAIL

SCALE: 3/4"=1'-0"

The Reinforced Earth Company 8614 Westwood Center Drive Suite 1100, Vienna, Virginia 22182 (703) 821-1175	DESCRIPTION C.I.P. VERTICAL COPING – TO MATCH PRECAST COPING	DATE : 3/04 SHEET NO. 0014

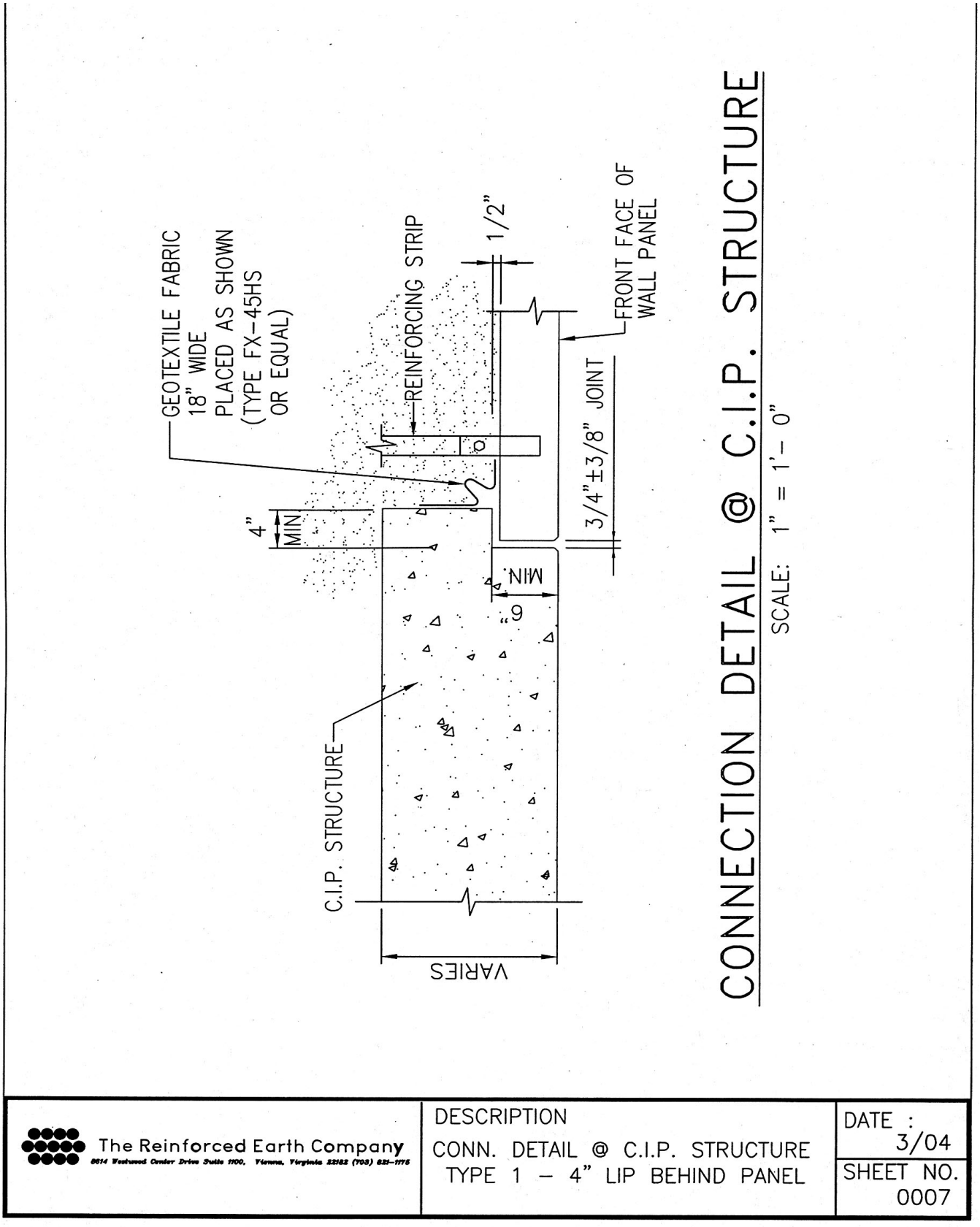

The Reinforced Earth Company 8614 Westwood Center Drive Suite 1100, Vienna, Virginia 22182 (703) 821-1175	DESCRIPTION CONN. DETAIL @ C.I.P. STRUCTURE TYPE 1 – 4" LIP BEHIND PANEL	DATE : 3/04 SHEET NO. 0007

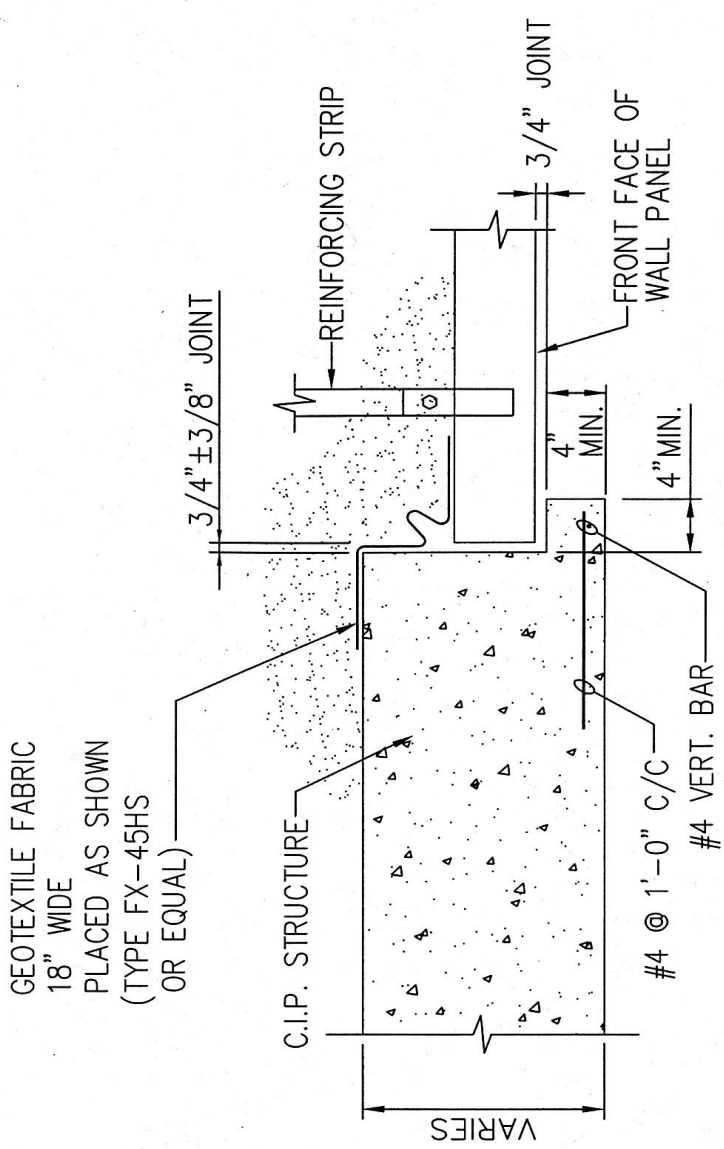

CONNECTION DETAIL @ C.I.P. STRUCTURE

SCALE: 1" = 1'- 0"

The Reinforced Earth Company 8614 Westwood Center Drive Suite 1100, Vienna, Virginia 22182 (703) 821-1175	DESCRIPTION CONN. DETAIL @ C.I.P. STRUCTURE TYPE 2 – 4" LIP IN FRONT OF PANEL	DATE : 3/04 SHEET NO. 0008

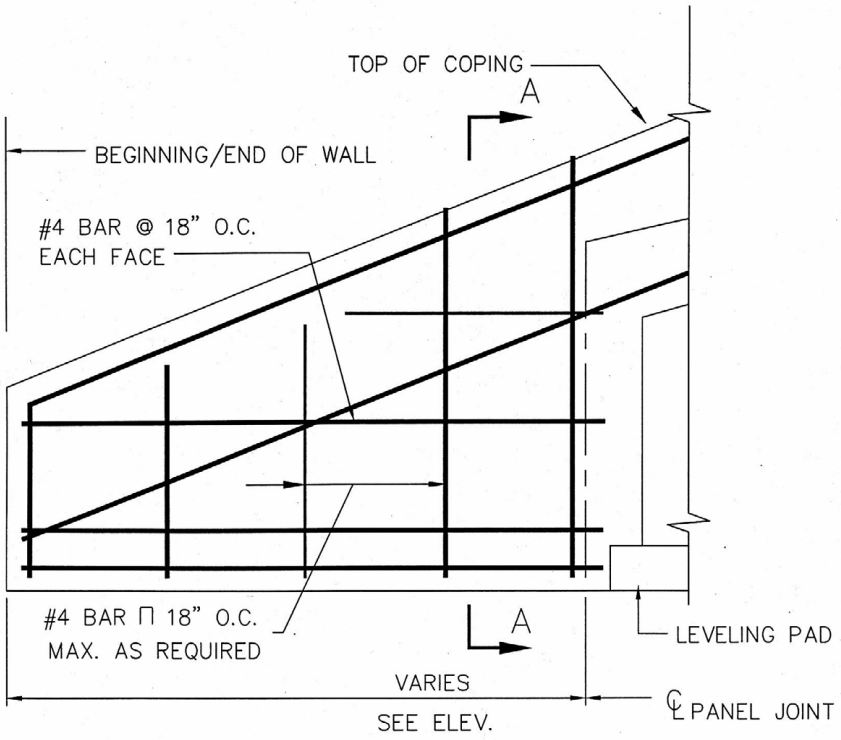

COPING ENCLOSURE DETAIL

SCALE: 3/4" = 1'– 0"

The Reinforced Earth Company 8614 Westwood Center Drive Suite 1100, Vienna, Virginia 22182 (703) 821-1175	DESCRIPTION COPING ENCLOSURE DETAIL	DATE : 3/04
	PARTIAL ELEVATION	SHEET NO. 0016A

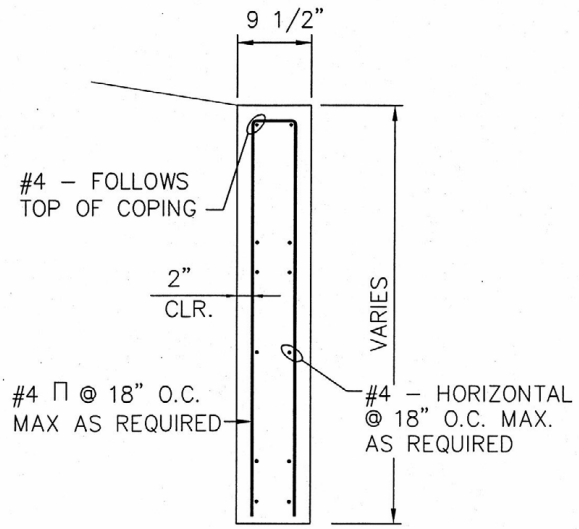

SECTION A–A

SCALE: 3/4" = 1'– 0"

The Reinforced Earth Company 8614 Westwood Center Drive Suite 1100, Vienna, Virginia 22182 (703) 821-1175	DESCRIPTION COPING ENCLOSURE DETAIL	DATE : 3/04
	SECTION A–A	SHEET NO. 0016B

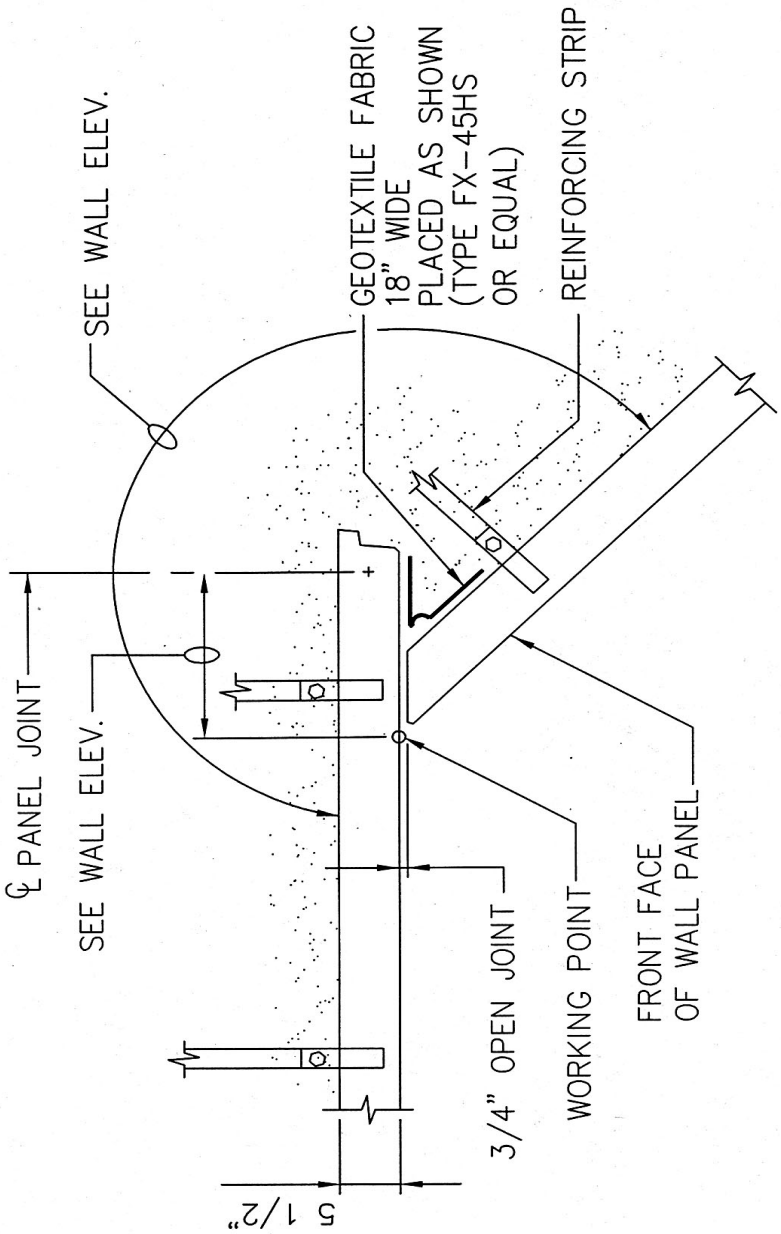

OBTUSE BUTT JOINT DETAIL

SCALE: 3/4" = 1'-0"

The Reinforced Earth Company 8614 Westwood Center Drive Suite 1100, Vienna, Virginia 22182 (703) 821-1175	DESCRIPTION OBTUSE BUTT JOINT DETAIL	DATE : 3/04
		SHEET NO. 0003

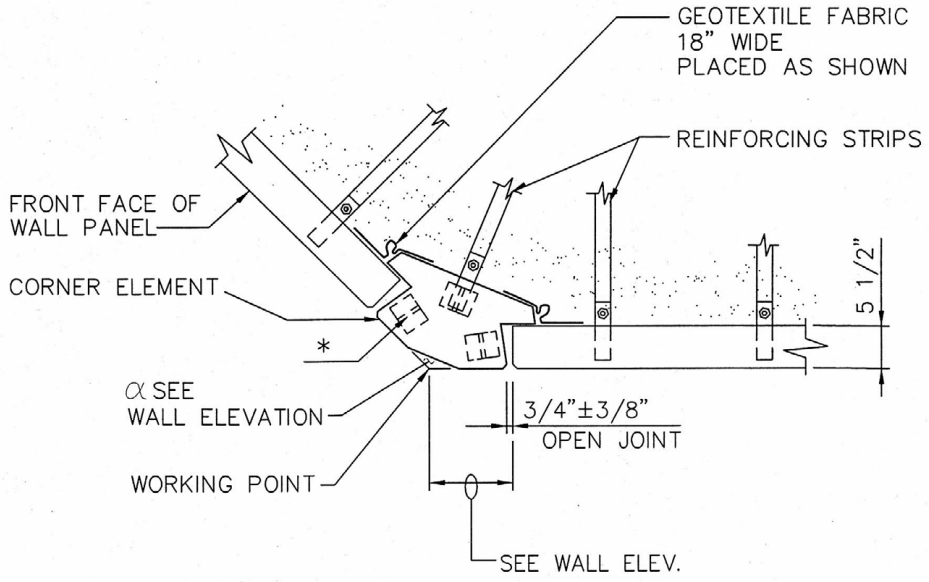

OBTUSE CORNER ELEMENT DETAIL

SCALE: 3/4" = 1'– 0"

* THREE BEARING PADS PER UNIT, BASE STEM OF BEARING PAD SHALL BE FIELD CUT TO FIT FLAT ON TOP OF CORNER ELEMENT. FRONT PADS SHALL BE PLACED ON INSIDE EDGE OF LIP.

The Reinforced Earth Company 8614 Westwood Center Drive Suite 1100, Vienna, Virginia 22182 (703) 821-1175	DESCRIPTION OBTUSE CORNER ELEMENT DETAIL	DATE : 3/04
		SHEET NO. 0006

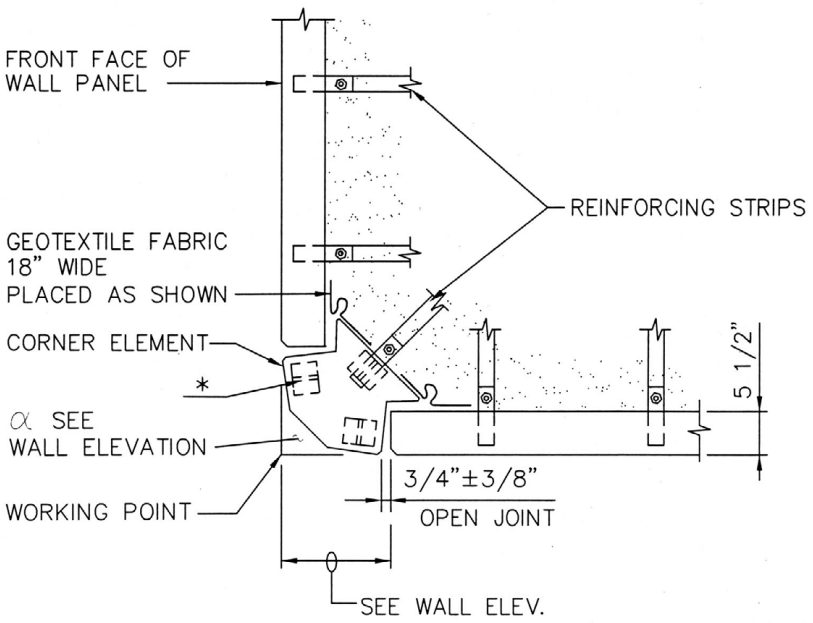

90° CORNER ELEMENT DETAIL

SCALE: 3/4" = 1'– 0"

* THREE BEARING PADS PER UNIT, BASE STEM OF BEARING PAD SHALL BE FIELD CUT TO FIT FLAT ON TOP OF CORNER ELEMENT. FRONT PADS SHALL BE PLACED ON INSIDE EDGE OF LIP.

The Reinforced Earth Company 8614 Westwood Center Drive Suite 1100, Vienna, Virginia 22182 (703) 821-1175	DESCRIPTION 90° CORNER ELEMENT DETAIL	DATE : 3/04
		SHEET NO. 0005

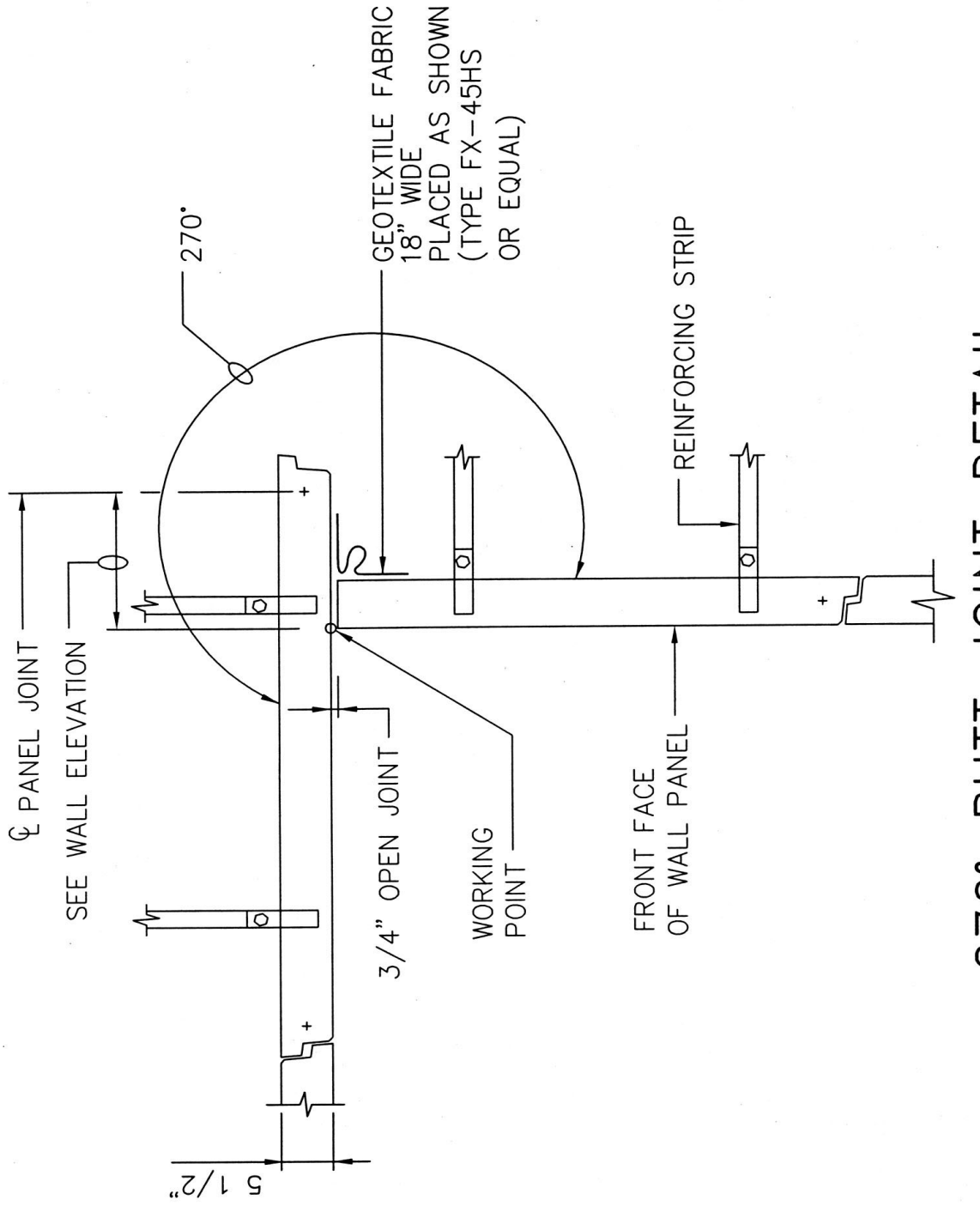

270° BUTT JOINT DETAIL

SCALE: 3/4" = 1'-0"

The Reinforced Earth Company 8614 Westwood Center Drive Suite 1100, Vienna, Virginia 22182 (703) 821-1175	DESCRIPTION 270° BUTT JOINT DETAIL	DATE : 3/04
		SHEET NO. 0002

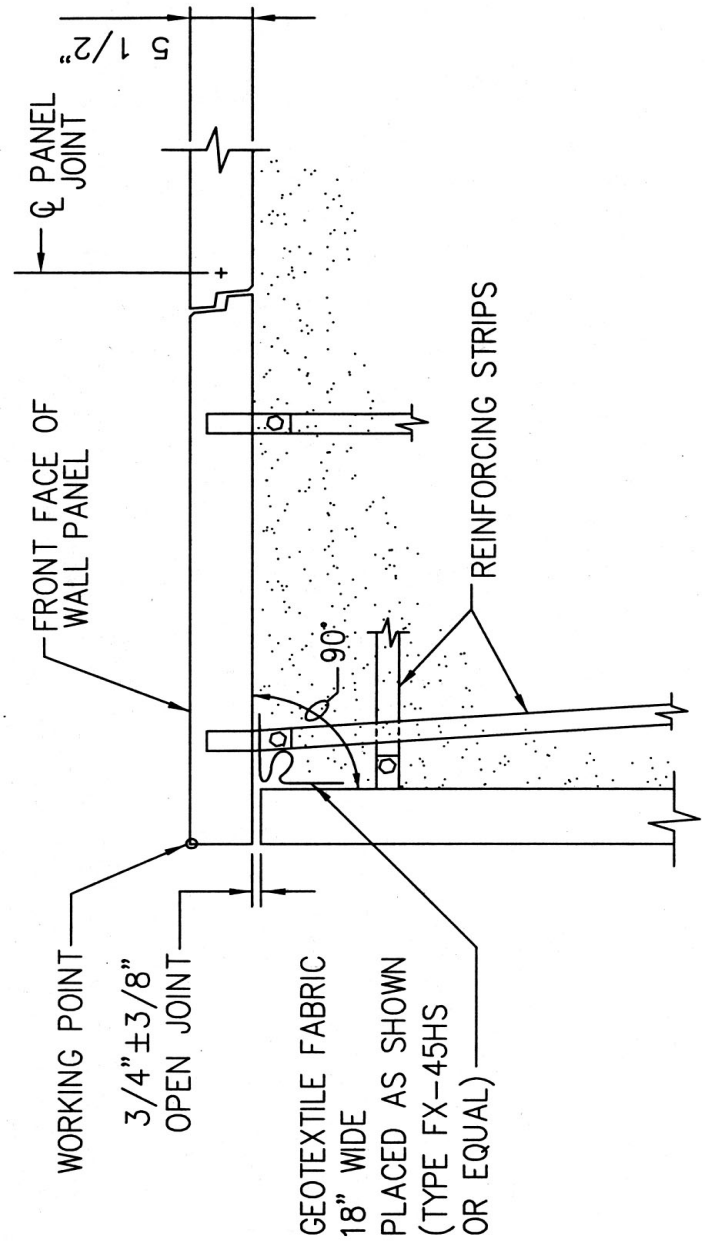

90° BUTT JOINT DETAIL

SCALE: 3/4" = 1'- 0"

The Reinforced Earth Company 8614 Tyrone Corner Drive Suite 1100, Vienna, Virginia 22182 (703) 821-1175	DESCRIPTION 90° BUTT JOINT DETAIL	DATE : 3/04
		SHEET NO. 0001

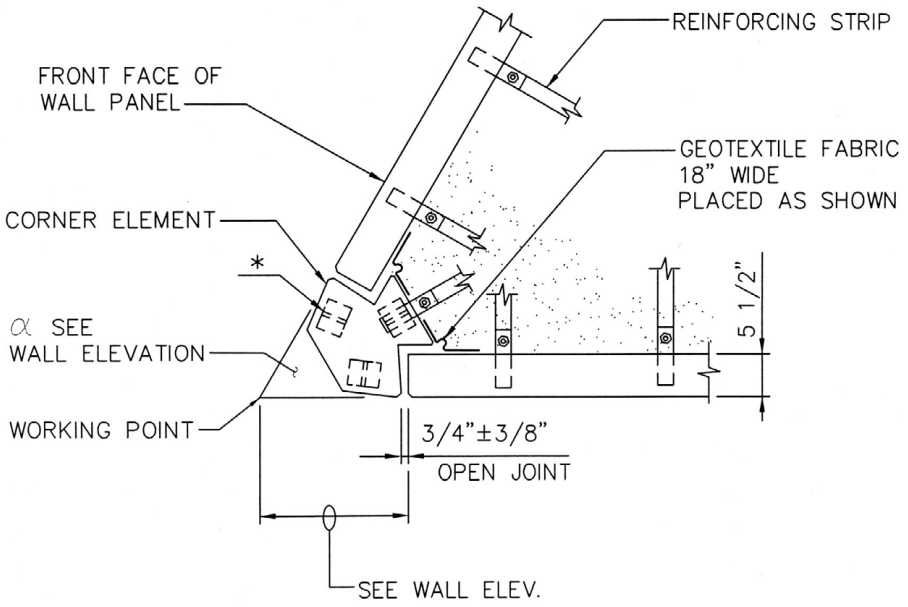

ACUTE CORNER ELEMENT DETAIL

SCALE: 3/4" = 1'– 0"

* THREE BEARING PADS PER UNIT, BASE STEM OF BEARING PAD SHALL BE FIELD CUT TO FIT FLAT ON TOP OF CORNER ELEMENT. FRONT PADS SHALL BE PLACED ON INSIDE EDGE OF LIP.

The Reinforced Earth Company 8614 Westwood Center Drive Suite 1100, Vienna, Virginia 22182 (703) 821-1175	DESCRIPTION ACUTE CORNER ELEMENT DETAIL	DATE : 3/04
		SHEET NO. 0004

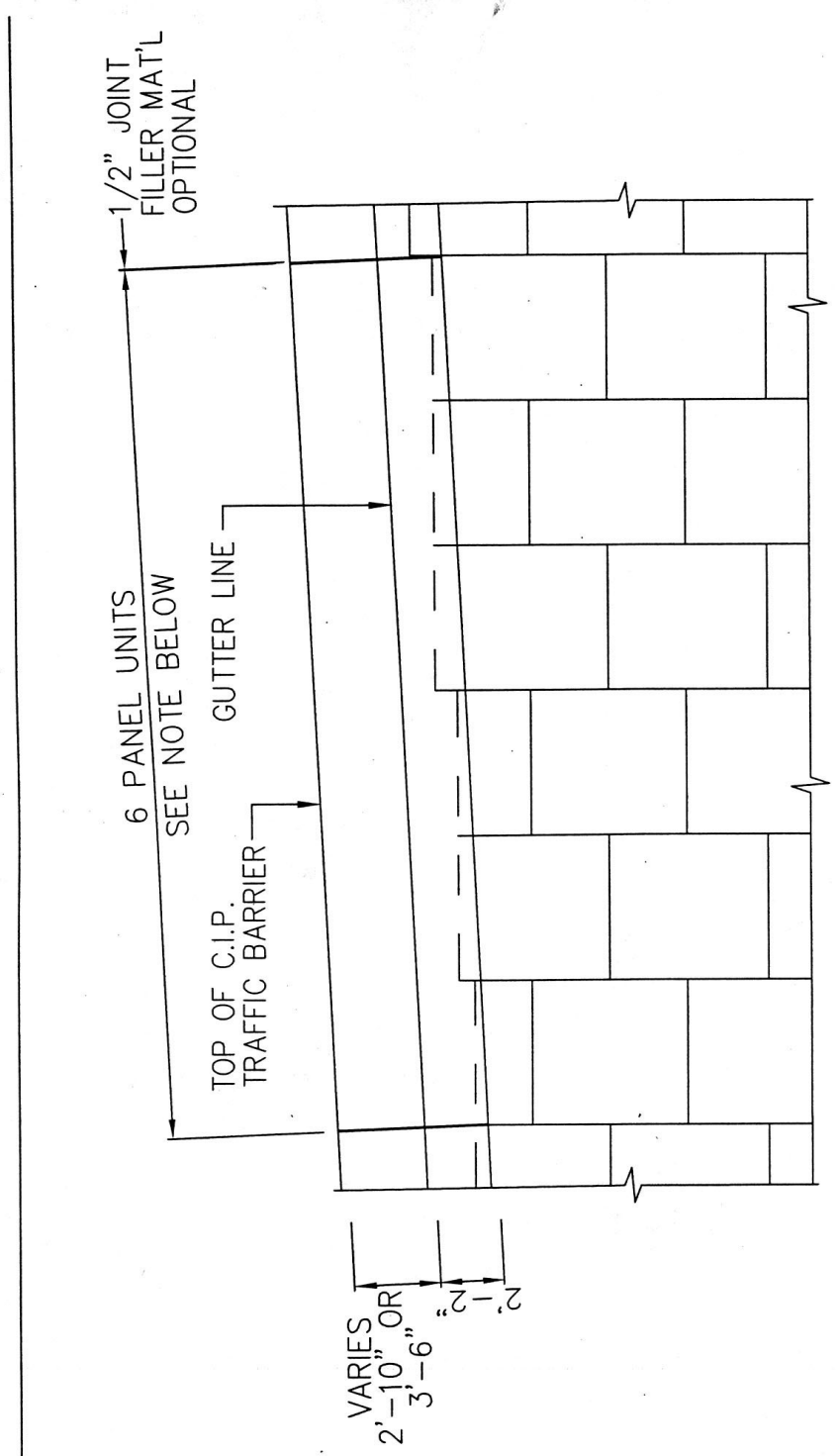

NOTE:
JOINTS IN PAVEMENT OR JUNCTION SLAB SHALL COINCIDE WITH JOINTS IN BARRIER.

C.I.P. TRAFFIC BARRIER

PARTIAL ELEVATION

SCALE: 3/16"=1'-0"

The Reinforced Earth Company 8614 Westwood Center Drive Suite 1100, Vienna, Virginia 22182 (703) 821-1175	DESCRIPTION C.I.P. BARRIER PARTIAL ELEVATION SQUARE PANELS	DATE : 3/04 SHEET NO. 0035

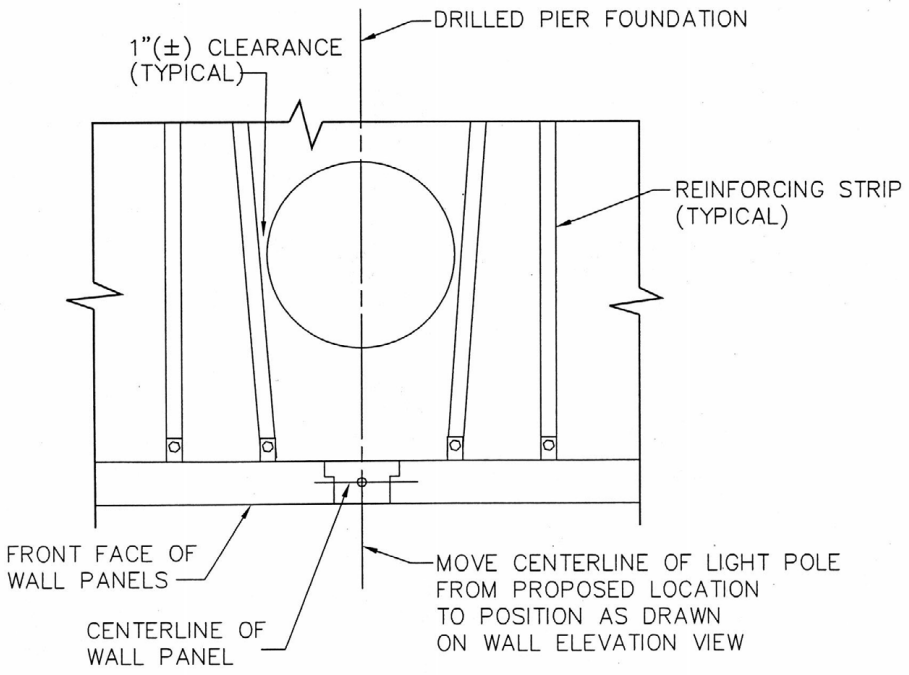

PARTIAL WALL PLAN AT LIGHT POLE

SCALE: 3/4" = 1'-0"

The Reinforced Earth Company 8614 Westwood Center Drive Suite 1000, Vienna, Virginia 22182 (703) 821-1175	DESCRIPTION PARTIAL PLAN AT LIGHT POLE	DATE : 3/04
		SHEET NO. 0036

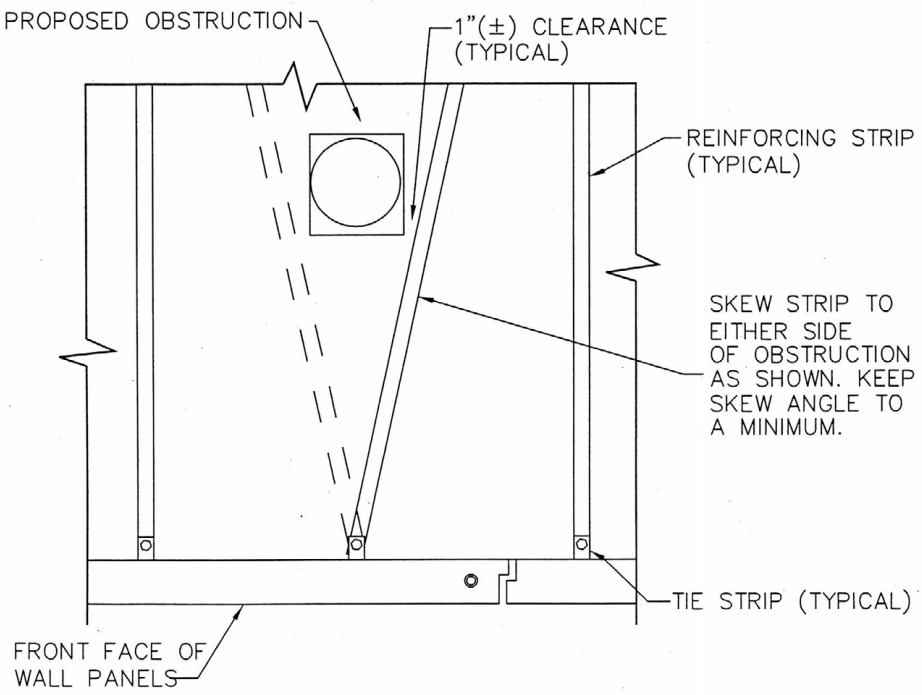

PARTIAL WALL PLAN AT OBSTRUCTION

SCALE: 3/4" = 1'-0"

The Reinforced Earth Company 8614 Westwood Center Drive Suite 1100, Vienna, Virginia 22182 (703) 821-1175	DESCRIPTION PARTIAL PLAN AT GENERAL OBSTRUCTION	DATE : 3/04
		SHEET NO. 0037

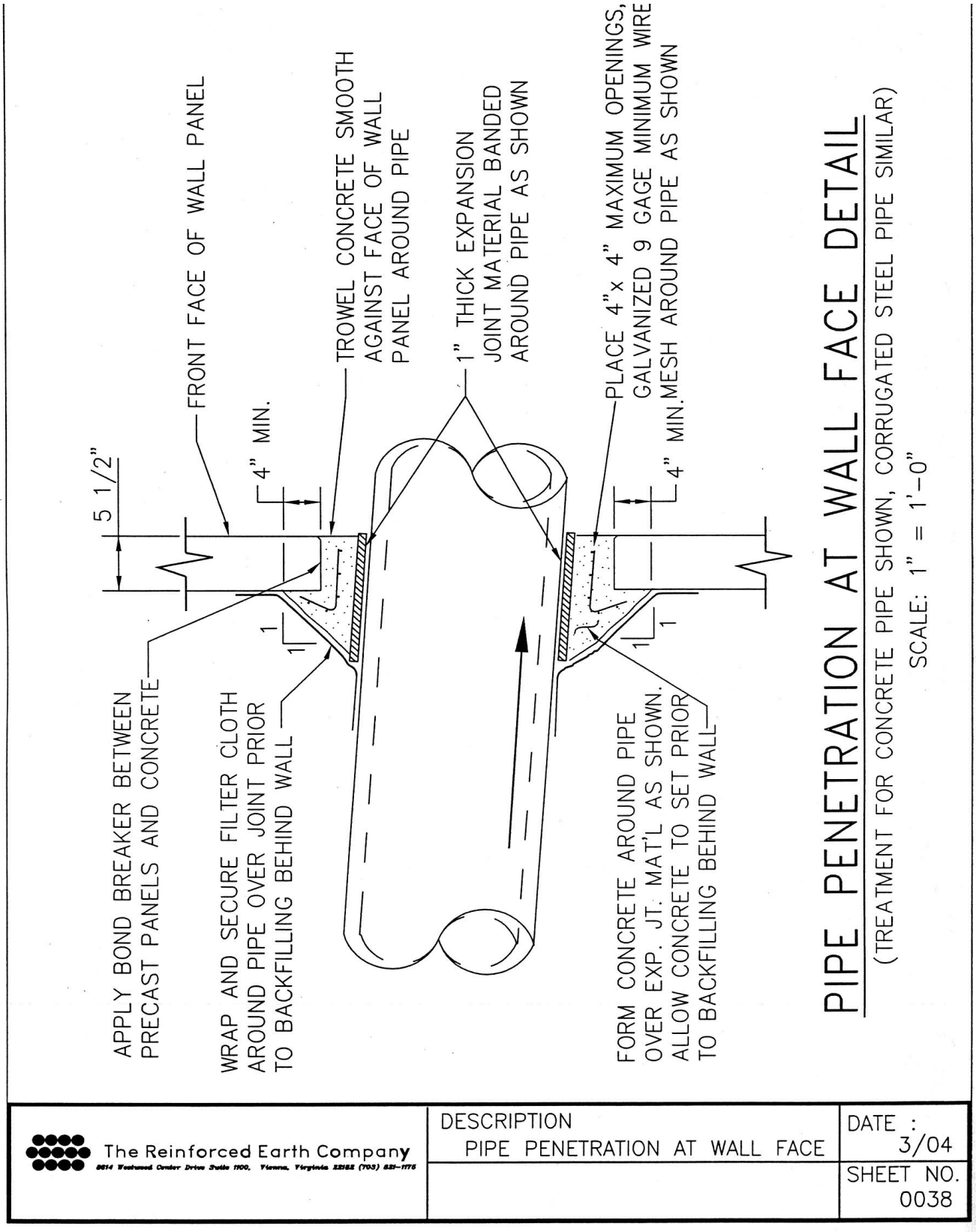
5 1/2"
FRONT FACE OF WALL PANEL
4" MIN.
TROWEL CONCRETE SMOOTH AGAINST FACE OF WALL PANEL AROUND PIPE
1" THICK EXPANSION JOINT MATERIAL BANDED AROUND PIPE AS SHOWN
PLACE 4"x 4" MAXIMUM OPENINGS, GALVANIZED 9 GAGE MINIMUM WIRE 4" MIN. MESH AROUND PIPE AS SHOWN
APPLY BOND BREAKER BETWEEN PRECAST PANELS AND CONCRETE
WRAP AND SECURE FILTER CLOTH AROUND PIPE OVER JOINT PRIOR TO BACKFILLING BEHIND WALL
FORM CONCRETE AROUND PIPE OVER EXP. JT. MAT'L AS SHOWN. ALLOW CONCRETE TO SET PRIOR TO BACKFILLING BEHIND WALL
1
1
1
1
PIPE PENETRATION AT WALL FACE DETAIL
(TREATMENT FOR CONCRETE PIPE SHOWN, CORRUGATED STEEL PIPE SIMILAR)
SCALE: 1" = 1'-0"
The Reinforced Earth Company
8614 Westwood Center Drive Suite 1100, Vienna, Virginia 22182 (703) 821-1175
DESCRIPTION
PIPE PENETRATION AT WALL FACE
DATE : 3/04
SHEET NO. 0038

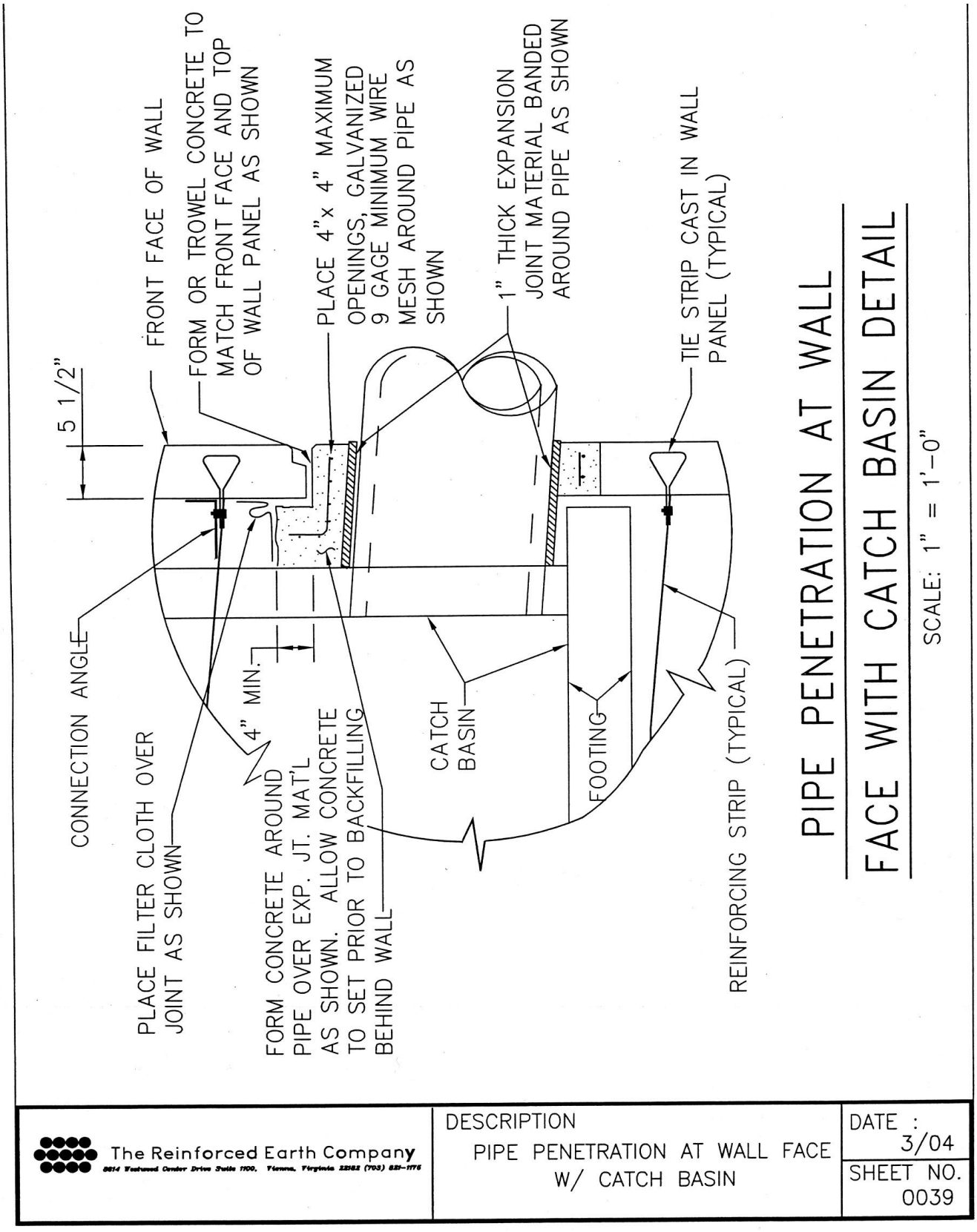
5 1/2"
FRONT FACE OF WALL
FORM OR TROWEL CONCRETE TO MATCH FRONT FACE AND TOP OF WALL PANEL AS SHOWN
PLACE 4"x 4" MAXIMUM OPENINGS, GALVANIZED 9 GAGE MINIMUM WIRE MESH AROUND PIPE AS SHOWN
1" THICK EXPANSION JOINT MATERIAL BANDED AROUND PIPE AS SHOWN
TIE STRIP CAST IN WALL PANEL (TYPICAL)
CONNECTION ANGLE
PLACE FILTER CLOTH OVER JOINT AS SHOWN
4" MIN.
FORM CONCRETE AROUND PIPE OVER EXP. JT. MAT'L AS SHOWN. ALLOW CONCRETE TO SET PRIOR TO BACKFILLING BEHIND WALL
CATCH BASIN
FOOTING
REINFORCING STRIP (TYPICAL)
PIPE PENETRATION AT WALL
FACE WITH CATCH BASIN DETAIL
SCALE: 1" = 1'-0"
The Reinforced Earth Company
8614 Westwood Center Drive Suite 1100, Vienna, Virginia 22182 (703) 821-1175
DESCRIPTION
PIPE PENETRATION AT WALL FACE W/ CATCH BASIN
DATE : 3/04
SHEET NO. 0039

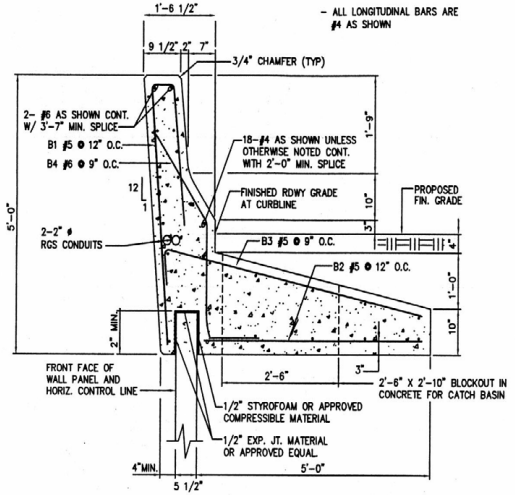

34" – C.I.P. CONC. TRAFFIC BARRIER DETAIL
SCALE: 1" = 1'- 0"

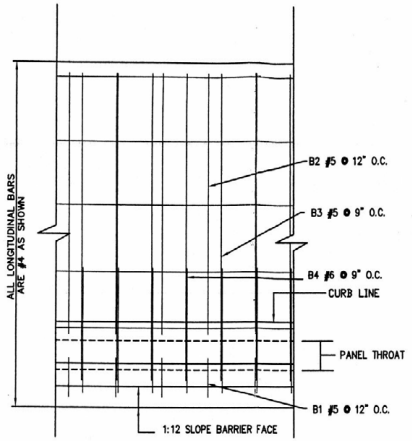

NOTE: LONGITUDINAL BARS IN BARRIER SECTION NOT SHOWN FOR CLARITY.

34" – C.I.P. CONC. TRAFFIC BARRIER PARTIAL PLAN
SCALE: 1" = 1'- 0"

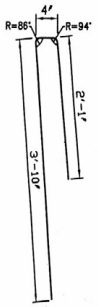

BAR B1

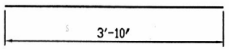

BAR B2

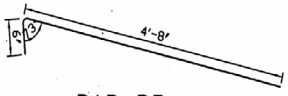

BAR B3

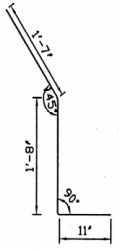

BAR B4

The Reinforced Earth Company
8614 Westwood Center Drive Suite 1100, Vienna, Virginia 22182 (703) 821-1175

DESCRIPTION	DATE :
34" – C.I.P. BARRIER DETAILS	3/04
	SHEET NO. 0040

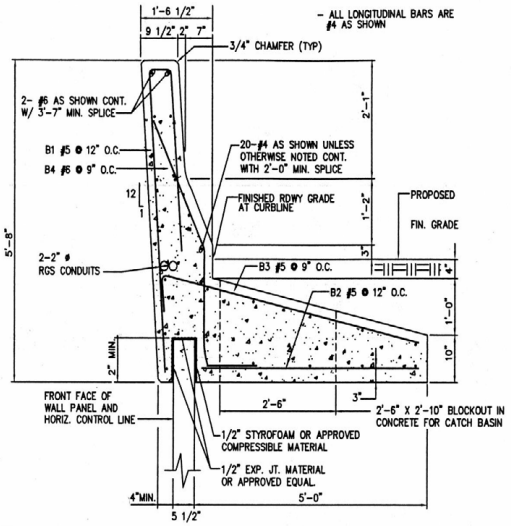

42" – C.I.P. CONC. TRAFFIC BARRIER DETAIL
SCALE: 1" = 1'- 0"

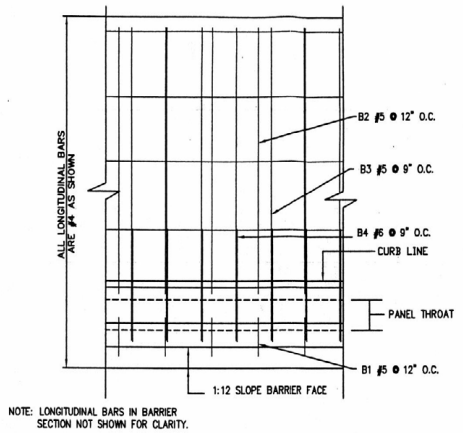

NOTE: LONGITUDINAL BARS IN BARRIER SECTION NOT SHOWN FOR CLARITY.

42" – C.I.P. CONC. TRAFFIC BARRIER PARTIAL PLAN
SCALE: 1" = 1'- 0"

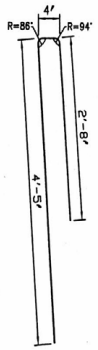

BAR B1

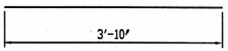

BAR B2

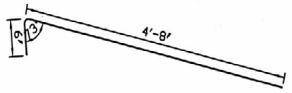

BAR B3

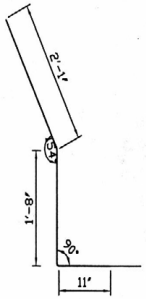

BAR B4

The Reinforced Earth Company
8614 Westwood Center Drive Suite 1100, Vienna, Virginia 22182 (703) 821-1175

DESCRIPTION	DATE :
42" – C.I.P. BARRIER DETAILS	3/04
	SHEET NO. 0041

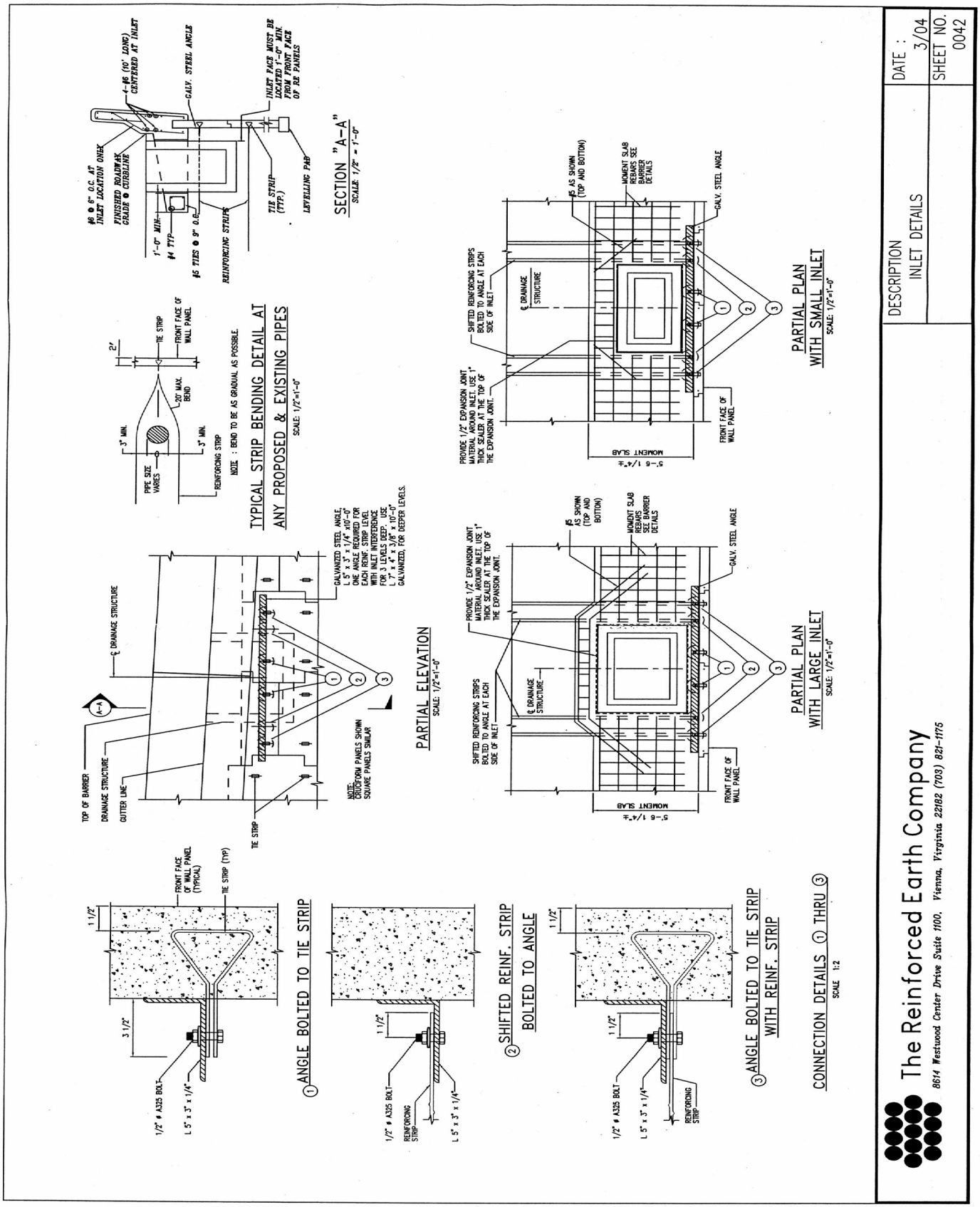
#6 @ 6" O.C. AT INLET LOCATION ONLY
FINISHED ROADWAY GRADE @ CURBLINE
1-#6 (10' LONG) CENTERED AT INLET
GALV. STEEL ANGLE
INLET FACE MUST BE LOCATED 1'-0" MIN. FROM FRONT FACE OF RE PANELS
1'-0" MIN.
#4 TYP.
#5 TIES @ 9" O.C.
REINFORCING STRIPS
TIE STRIP (TYP.)
LEVELLING PAD
SECTION "A-A"
SCALE: 1/2" = 1'-0"
TYPICAL STRIP BENDING DETAIL AT ANY PROPOSED & EXISTING PIPES
SCALE: 1/2"=1'-0"
2'
TIE STRIP
FRONT FACE OF WALL PANEL
20° MAX. BEND
3" MIN.
3" MIN.
PIPE SIZE VARIES
REINFORCING STRIP
NOTE : BEND TO BE AS GRADUAL AS POSSIBLE.
PARTIAL ELEVATION
SCALE: 1/2"=1'-0"
℄ DRAINAGE STRUCTURE
A
A
TOP OF BARRIER
DRAINAGE STRUCTURE
GUTTER LINE
TIE STRIP
GALVANIZED STEEL ANGLE, L 5" x 3" x 1/4" x10'-0" ONE ANGLE REQUIRED FOR EACH REINF. STRIP LEVEL WITH INLET INTERFERENCE FOR 3 LEVELS DEEP. USE L 7" x 4" x 3/8 x10'-0" GALVANIZED, FOR DEEPER LEVELS.
NOTE: CRUCIFORM PANELS SHOWN SQUARE PANELS SIMILAR
PROVIDE 1/2" EXPANSION JOINT MATERIAL AROUND INLET. USE 1" THICK SEALER AT THE TOP OF THE EXPANSION JOINT.
SHIFTED REINFORCING STRIPS BOLTED TO ANGLE AT EACH SIDE OF INLET
#5 AS SHOWN (TOP AND BOTTOM)
MOMENT SLAB REBARS SEE BARRIER DETAILS
GALV. STEEL ANGLE
℄ DRAINAGE STRUCTURE
FRONT FACE OF WALL PANEL
MOMENT SLAB
5'-6 1/4"±
PARTIAL PLAN WITH SMALL INLET
SCALE: 1/2"=1'-0"
PARTIAL PLAN WITH LARGE INLET
SCALE: 1/2"=1'-0"
CONNECTION DETAILS ① THRU ③
SCALE 1:2
FRONT FACE OF WALL PANEL (TYPICAL)
TIE STRIP (TYP)
1 1/2"
3 1/2"
1/2" ø A325 BOLT
L 5" x 3" x 1/4"
① ANGLE BOLTED TO TIE STRIP
REINFORCING STRIP
② SHIFTED REINF. STRIP BOLTED TO ANGLE
③ ANGLE BOLTED TO TIE STRIP WITH REINF. STRIP
The Reinforced Earth Company
8614 Westwood Center Drive Suite 1100, Vienna, Virginia 22182 (703) 821-1175
DESCRIPTION
INLET DETAILS
DATE : 3/04
SHEET NO. 0042

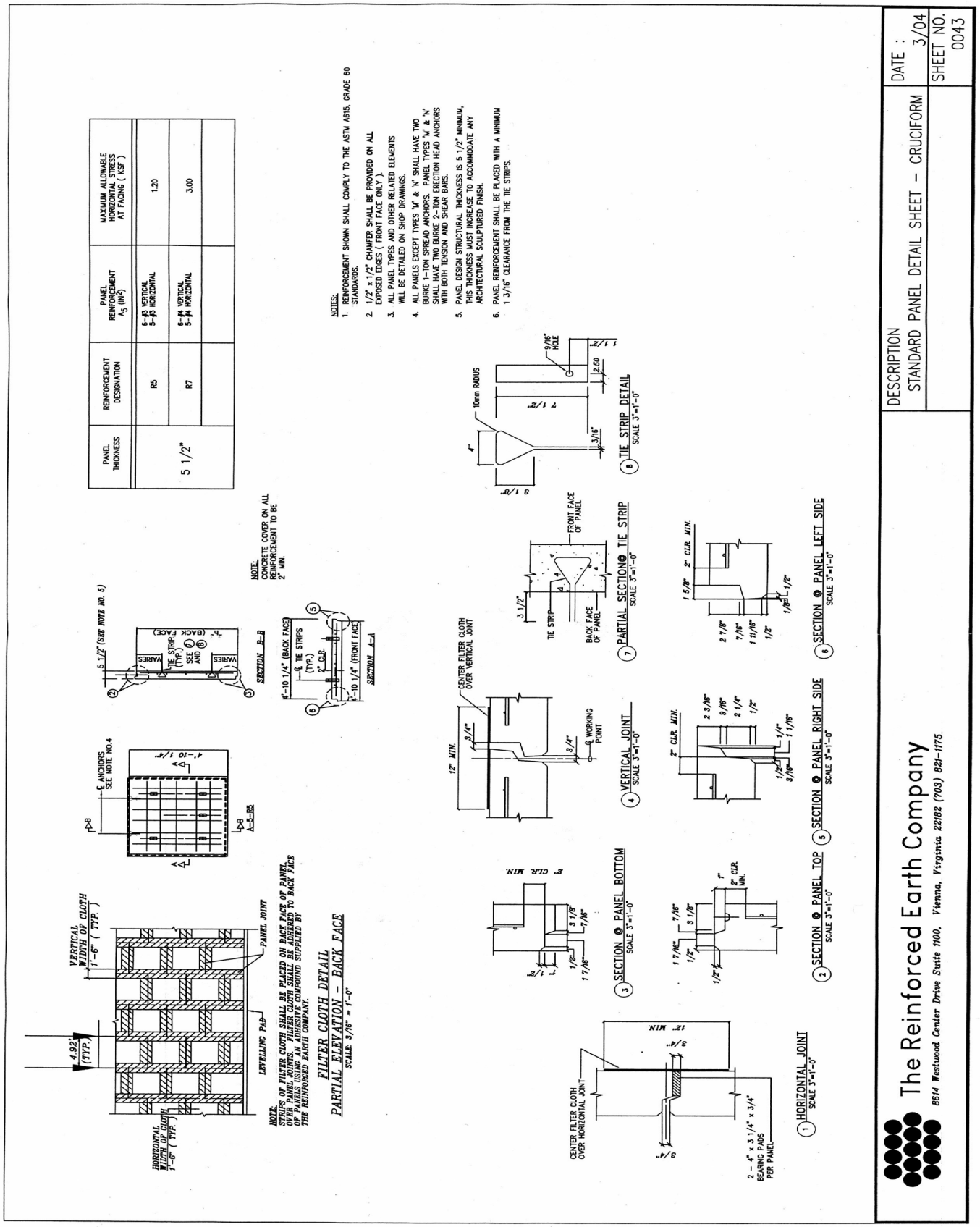
PANEL THICKNESS
REINFORCEMENT DESIGNATION
PANEL REINFORCEMENT A_s (IN²)
MAXIMUM ALLOWABLE HORIZONTAL STRESS AT FACING (KSF)
5 1/2"
R5
6-#3 VERTICAL 5-#3 HORIZONTAL
1.20
R7
6-#4 VERTICAL 5-#4 HORIZONTAL
3.00
NOTES:
1. REINFORCEMENT SHOWN SHALL COMPLY TO THE ASTM A615, GRADE 60 STANDARDS.
2. 1/2" x 1/2" CHAMFER SHALL BE PROVIDED ON ALL EXPOSED EDGES (FRONT FACE ONLY).
3. ALL PANEL TYPES AND OTHER RELATED ELEMENTS WILL BE DETAILED ON SHOP DRAWINGS.
4. ALL PANELS EXCEPT TYPES "M" & "N" SHALL HAVE TWO BURRE 1-TON SPREAD ANCHORS. PANEL TYPES "M" & "N" SHALL HAVE TWO BURRE 2-TON ERECTION HEAD ANCHORS WITH BOTH TENSION AND SHEAR BARS.
5. PANEL DESIGN STRUCTURAL THICKNESS IS 5 1/2" MINIMUM, THIS THICKNESS MUST INCREASE TO ACCOMMODATE ANY ARCHITECTURAL SCULPTURED FINISH.
6. PANEL REINFORCEMENT SHALL BE PLACED WITH A MINIMUM 1 3/16" CLEARANCE FROM THE TIE STRIPS.
NOTE: CONCRETE COVER ON ALL REINFORCEMENT TO BE 2" MIN.
SECTION B-B
SECTION A-A
FILTER CLOTH DETAIL
PARTIAL ELEVATION – BACK FACE
SCALE: 3/16" = 1'-0"
NOTE: STRIPS OF FILTER CLOTH SHALL BE PLACED ON BACK FACE OF PANEL, OVER PANEL JOINTS. FILTER CLOTH SHALL BE ADHERED TO BACK FACE OF PANELS USING AN ADHESIVE COMPOUND SUPPLIED BY THE REINFORCED EARTH COMPANY.
VERTICAL WIDTH OF CLOTH 1'-6" (TYP.)
HORIZONTAL FILTER CLOTH 1'-6" (TYP.)
PANEL JOINT
LEVELLING PAD
4.92' (TYP.)
℄ ANCHORS SEE NOTE NO.4
4'-10 1/4"
A-S5-R5
TIE STRIP (TYP.) SEE ① AND ②
VARIES
5 1/2" (SEE NOTE NO. 6)
4" (BACK FACE)
4'-10 1/4" (BACK FACE)
℄ TIE STRIPS (TYP.)
2" CLR.
4'-10 1/4" (FRONT FACE)
① HORIZONTAL JOINT SCALE 3"=1'-0"
② SECTION ❷ PANEL TOP SCALE 3"=1'-0"
③ SECTION ❸ PANEL BOTTOM SCALE 3"=1'-0"
④ VERTICAL JOINT SCALE 3"=1'-0"
⑤ SECTION ❺ PANEL RIGHT SIDE SCALE 3"=1'-0"
⑥ SECTION ❻ PANEL LEFT SIDE SCALE 3"=1'-0"
⑦ PARTIAL SECTION ❼ TIE STRIP SCALE 3"=1'-0"
⑧ TIE STRIP DETAIL SCALE 3"=1'-0"
CENTER FILTER CLOTH OVER HORIZONTAL JOINT
2 – 4" x 3 1/4" x 3/4" BEARING PADS PER PANEL
12" MIN.
3/4"
CENTER FILTER CLOTH OVER VERTICAL JOINT
℄ WORKING POINT
2" CLR. MIN.
10mm RADIUS
9/16" HOLE
TIE STRIP
BACK FACE OF PANEL
FRONT FACE OF PANEL
1 5/8" 2" CLR. MIN.
The Reinforced Earth Company
8614 Westwood Center Drive Suite 1100. Vienna, Virginia 22182 (703) 821-1775
DESCRIPTION
STANDARD PANEL DETAIL SHEET – CRUCIFORM
DATE : 3/04
SHEET NO. 0043

Appendix 15-K Preapproved Wall Appendix: Specific Requirements and Details for Tensar ARES Walls

In addition to the general design requirements provided in Appendix 15-A, the following specific requirements apply:

The detailed design methodology, design properties, and assumptions used by Tensar Earth Technologies for the ARES wall are summarized in the HITEC evaluation report for this wall system (HITEC, 1997, *Evaluation of the Tensar ARES Retaining Wall System*, ASCE, CERF Report No. 40301). The design methodology, which is based on the Standard Specifications for Highway Bridges (2002) is consistent with the general design requirements in Appendix 15-A, except as noted below. Interim approval is given for the continued use of the AASHTO Standard Specifications as the basis for design.

Reinforcement pullout shall be calculated based on the default values for geogrid reinforcement provided in the AASHTO Specifications. For LRFD based design, while it is recognized that product and soil type specific pullout interaction coefficients obtained in accordance with the AASHTO LRFD Specifications for the Tensar products used with this wall system are provided in the HITEC report for the ARES Wall system, pullout resistance design using these product and soil specific interaction coefficients has not been calibrated using the available product specific data statistics and reliability theory. Therefore, the specified resistance factors in the GDM and AASHTO LRFD Specifications should not be considered applicable to the product specific pullout interaction coefficients provided in the HITEC report.

The reinforcement long-term tensile strengths (T_{al}) provided in the WSDOT *Qualified Products List* (QPL) for the Tensar Geogrid product series, which are based on the 2003 version of the product series, shall be used for wall design, until such time that they are updated, and the updated strengths approved for WSDOT use in accordance with WSDOT Standard Practice T 925. Until such time that the long-term reinforcement strengths are updated, it shall be verified that any material sent to the project site for this wall system is the 2003 version of the product. Furthermore, the short-term ultimate tensile strengths (ASTM D6637) listed in the QPL shall be used as the basis for quality assurance testing and acceptance of the product as shipped to the project site per the *Standard Specifications* for Construction.

The HITEC report provided details and design criteria for a panel slot connector to attach the geogrid reinforcement to the facing panel. Due to problems with cracking of the facing panel at the location of the slot, that connection system has been discontinued and replaced with a full thickness panel in which geogrid tabs have been embedded into the panel. For this new connection system, the geogrid reinforcement is connected to the geogrid tab through the use of a Bodkin joint. Construction and fabrication inspectors should verify that the panels to be used for WSDOT projects do not contain the discontinued slot connector.

The Bodkin connection test results provided by letter to WSDOT dated September 28, 2004, were performed on the 2003 version of the Tensar geogrid product line. In that letter, it was stated that UMESA6 (UX1700HS) will typically be used for the connector tabs, regardless of the product selected for the reinforcement. If a lighter weight product is used for the connector tabs, the connection strength will need to be reduced accordingly. Table 15-(Tensar ARES)-1 provides a summary of the connection strengths that are approved for use with the ARES wall system.

Table 15-K-1 Approved Connection Strength Design Values for Tensar Ares Walls

Tensar Soil Reinforcement Geogrid Product	Tensar Panel Connector Tab Geogrid Product	T_{ult} (MARV) for Geogrid Reinforcement per ASTM D6637 in WSDOT QPL (lbs/ft)	CR_u	RF	T_{ac} (lbs/ft)
UMESA3/UX1400HS	UMESA6/UX1700HS	4,820	1.0	3.6	1,340
UMESA4/UX1500HS	UMESA6/UX1700HS	7,880	1.0	3.5	2,250
UMESA5/UX1600HS	UMESA6/UX1700HS	9,870	1.0	3.4	2,900
UMESA6/UX1700HS	UMESA6/UX1700HS	12,200	0.91	3.3	3,360
UMESA3/UX1400HS	UMESA3/UX1400HS	4,820	0.85	3.6	1,140
UMESA4/UX1500HS	UMESA4/UX1500HS	7,880	0.79	3.5	1,780
UMESA5/UX1600HS	UMESA5/UX1600HS	9,870	0.87	3.4	2,530
UMESA6/UX1700HS	UMESA6/UX1700HS	12,200	0.91	3.3	3,360

T_{ac}, the long-term connection strength, shall be calculated as follows for the Tensar ARES wall:

$$T_{ac} = \frac{T_{MARV} \bullet CR_u}{RF} \qquad \text{(15-(Tensar ARES)-1)}$$

Where:

$RF = RF_{ID} \times RF_{CR} \times RF_D$

and,

T_{MARV} = The minimum average roll value for the ultimate geosynthetic strength T_{ult}

CR_u = The ultimate connection strength $T_{ultconn}$ divided by the lot specific ultimate tensile strength, T_{lot} (i.e., the lot of material specific to the connection testing)

RF_{ID} = Reduction factor for installation damage

RF_{CR} = Creep reduction factor for the geosynthetic

RF_D = The durability reduction factor for the geosynthetic

Approved details for the Tensar ARES wall system are provided in the following plan sheets. Exceptions and additional requirements regarding these approved details are as follows:

- For all plan sheets, the full height panel details are not preapproved. Full height panels may be used by special design, with the approval of the State Bridge Design Engineer and the State Geotechnical Engineer, provided a complete wall design with detailed plans are developed and included in the construction contract (i.e., full height panel walls shall not be submitted as shop drawings in design-bid-build projects).
- In plan sheet 3 of 19, there should be a minimum cover of 4 inches of soil between the geogrid and the traffic barrier reaction slab.
- In plan sheet 8 of 19, the strength of the geogrid and connection available shall be reduced by 10% to account for the skew of the geogrid reinforcement. The skew angle relative to the perpendicular from the wall face shall be no more than 10°.
- In plan sheets 10 and 14 of 19, regarding the filter fabric shown, WSDOT reserves the right to require the use *Standard Specification* materials as specified in *Standard Specification* Section 9-33 that are similar to those specified in this plan sheet.
- In plan sheet 15 of 19, the guard rail detail, the guard rail post shall either be installed through precut holes in the geogrid layers that must penetrated, or the geogrid layers shall be cut in a manner that prevents ripping or tearing of the geogrid.
- The culvert penetration and obstruction avoidance details are preapproved up to a diameter of 2 feet for culvert penetration through the face and up to 4 feet for obstruction avoidance. Larger diameter culverts or obstructions are not considered preapproved. This wall is also preapproved for use with traffic barriers.

Tensar®

CONSTRUCTION DRAWINGS
Prepared For

STATE OF WASHINGTON
DEPARTMENT OF TRANSPORTATION

STANDARD ARES PRECAST PANEL RETAINING WALL DETAILS

INDEX

SHEET	DESCRIPTION
1.	Title Sheet
2.	ARES Retaining Wall Construction Requirements
3.	ARES Articulated Panel Cross-Section
4.	ARES Full Height Panel Cross-Section
5.	ARES Articulated Panels
6.	ARES Full Height Panels
7.	Corner/Slip Joint Elements
8.	Geogrid Panel Connection

INDEX

SHEET	DESCRIPTION
9.	Geogrid Panel Connection
10.	ARES Articulated Panel Leveling Pad
11.	ARES Full Height Panel Leveling Pad
12.	Panel Coping
13.	Panel Coping
14.	Obstructions
15.	Typical Details
16.	32 Inch Type "F" Traffic Barrier Standard
17.	32 Inch Type "F" Traffic Barrier Standard
18.	42 Inch Type "F" Traffic Barrier Standard
19.	42 Inch Type "F" Traffic Barrier Standard

SHEET01.DWG

THIS DESIGN IS BASED UPON SPECIFIC PROPERTIES OF TENSAR PRODUCTS (GEOGRIDS, DRAINAGE COMPOSITES AND EROSION MEDIA), WHICH ARE PROPRIETARY TO THE TENSAR CORPORATION 1210 CITIZENS PARKWAY, MORROW GA. 30260. ANY SUBSTITUTION OF THE SPECIFIED PRODUCTS WILL INVALIDATE THIS DESIGN. THIS DRAWING IS BEING FURNISHED FOR USE ON THIS SPECIFIC PROJECT ONLY. ANY PARTY ACCEPTING THIS DOCUMENT DOES SO IN CONFIDENCE AND AGREES THAT IT SHALL NOT BE DUPLICATED WHOLE OR IN PART, NOR DISCLOSED TO OTHERS, WITHOUT THE CONSENT OF TENSAR EARTH TECHNOLOGIES, INC.

COPYRIGHT 2004, TENSAR EARTH TECHNOLOGIES, INC.

Tensar®
Tensar Earth Technologies, Inc.
5883 Glenridge Drive, Suite 200
Atlanta, Georgia 30328
(404) 250-1290

REVISIONS \ ISSUE		
0	8/6/04	ISSUED FOR REVIEW

Project Number
Date Drawn 8/6/04
Scale As Shown
Designed by GIK
Drawn by KJK
Checked by

STANDARD ARES PRECAST PANEL RETAINING WALL DETAILS

TITLE SHEET

Sheet Number 1 of 19

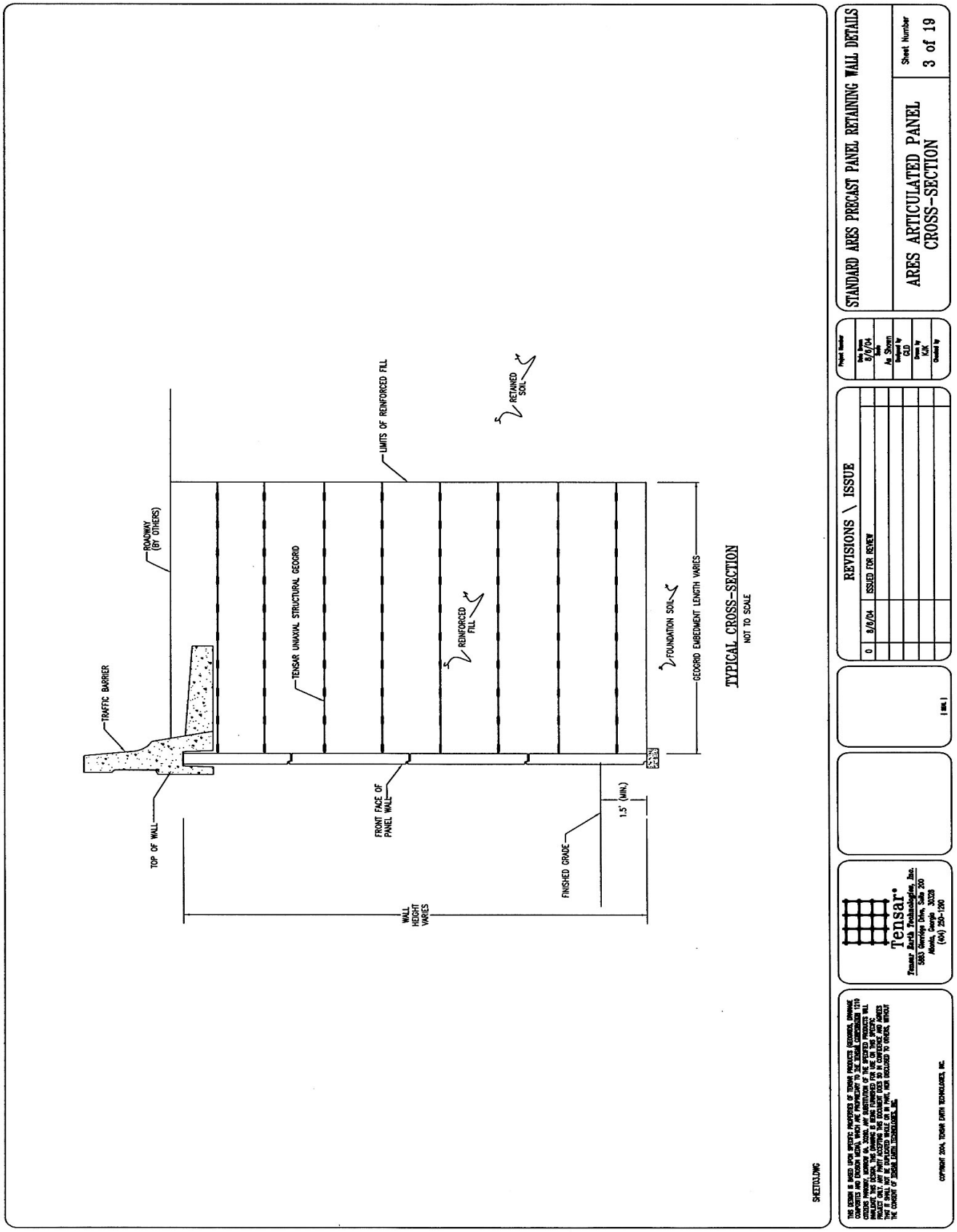
LIMITS OF REINFORCED FILL
RETAINED SOIL
ROADWAY (BY OTHERS)
TRAFFIC BARRIER
TENSAR UNIAXIAL STRUCTURAL GEOGRID
REINFORCED FILL
FOUNDATION SOIL
GEOGRID EMBEDMENT LENGTH VARIES
TOP OF WALL
FRONT FACE OF PANEL WALL
1.5' (MIN.)
FINISHED GRADE
WALL HEIGHT VARIES
TYPICAL CROSS-SECTION
NOT TO SCALE
REVISIONS \ ISSUE
0 8/8/04 ISSUED FOR REVIEW
STANDARD ARES PRECAST PANEL RETAINING WALL DETAILS
ARES ARTICULATED PANEL CROSS-SECTION
Sheet Number 3 of 19
Tensar
Tensar Earth Technologies, Inc.
5883 Glenridge Drive, Suite 200
Atlanta, Georgia 30328
(404) 250-1290
COPYRIGHT 2004, TENSAR EARTH TECHNOLOGIES, INC.

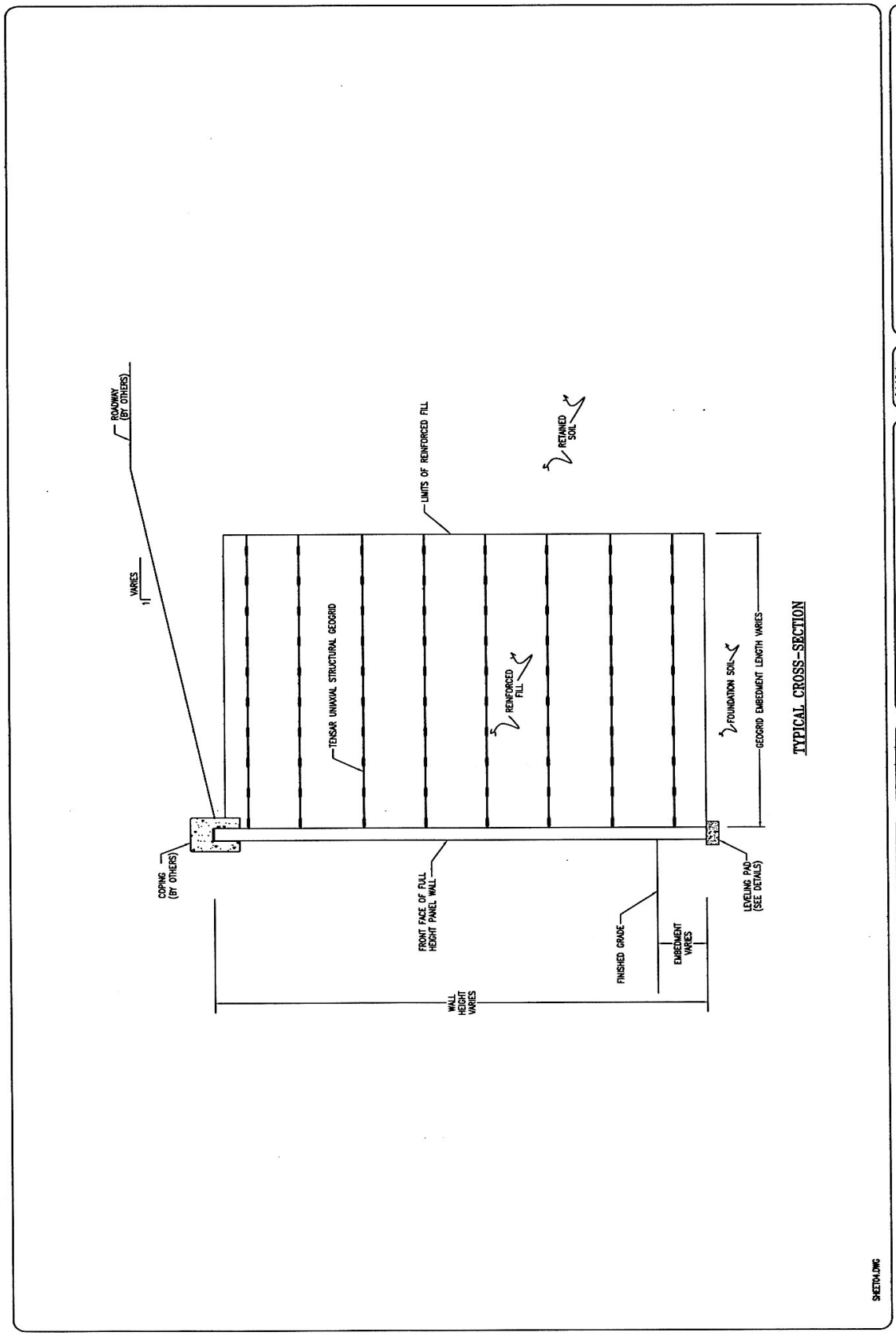
ROADWAY (BY OTHERS)
VARIES
1
LIMITS OF REINFORCED FILL
RETAINED SOIL
TENSAR UNIAXIAL STRUCTURAL GEOGRID
REINFORCED FILL
FOUNDATION SOIL
GEOGRID EMBEDMENT LENGTH VARIES
COPING (BY OTHERS)
FRONT FACE OF FULL HEIGHT PANEL WALL
LEVELING PAD (SEE DETAILS)
FINISHED GRADE
EMBEDMENT VARIES
WALL HEIGHT VARIES
TYPICAL CROSS-SECTION
SHEET04.DWG
REVISIONS \ ISSUE
0 8/6/04 ISSUED FOR REVIEW
Project Number
Date Drawn 8/6/04
Scale As Shown
Designed by CAD
Drawn by MJK
Checked by
STANDARD ARES PRECAST PANEL RETAINING WALL DETAILS
ARES FULL HEIGHT PANEL CROSS-SECTION
Sheet Number 4 of 19
Tensar
Tensar Earth Technologies, Inc.
5883 Glenridge Drive, Suite 200
Atlanta, Georgia 30328
(404) 250-1290
COPYRIGHT 2004, TENSAR EARTH TECHNOLOGIES, INC.

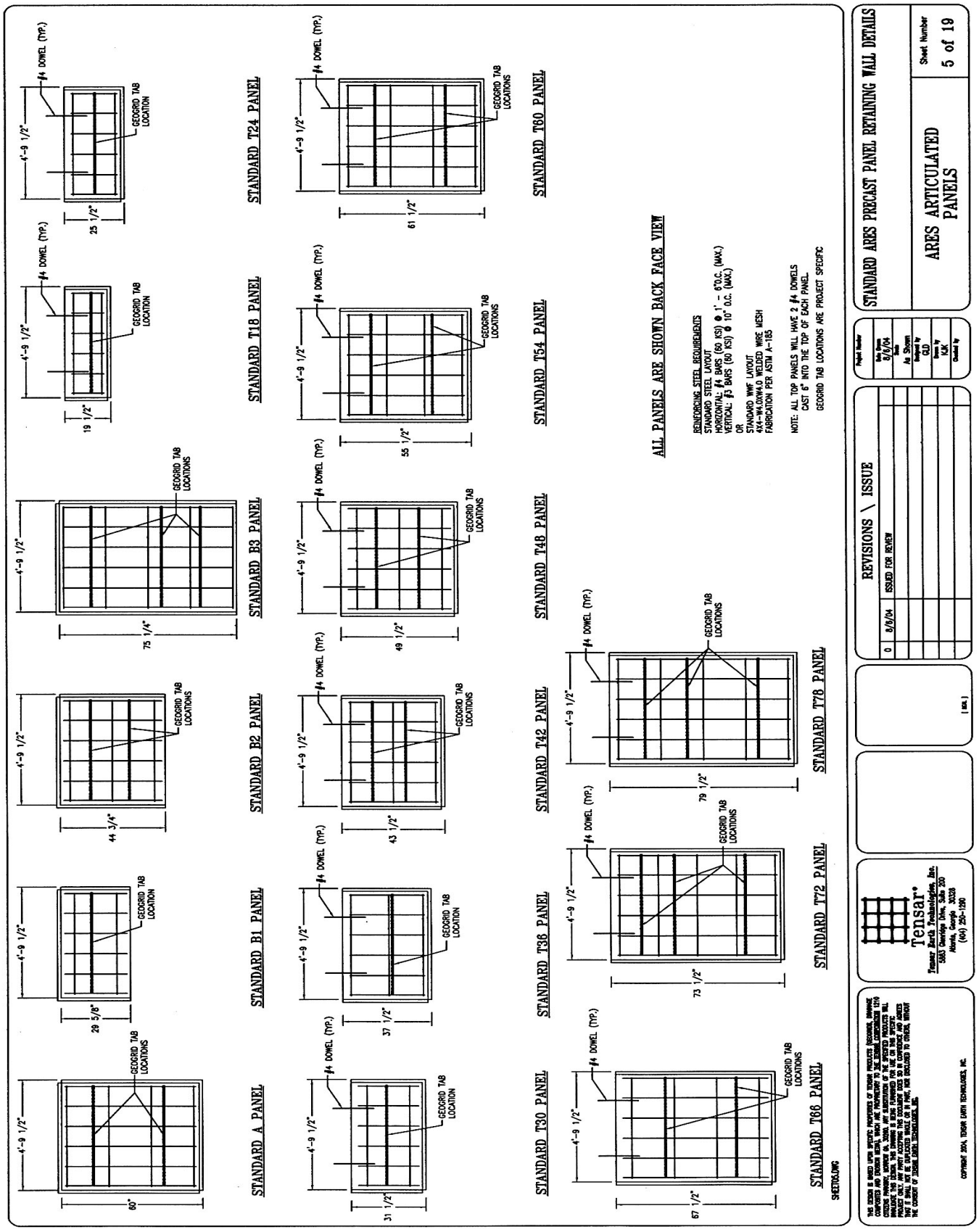
STANDARD A PANEL
STANDARD B1 PANEL
STANDARD B2 PANEL
STANDARD B3 PANEL
STANDARD T18 PANEL
STANDARD T24 PANEL
STANDARD T30 PANEL
STANDARD T36 PANEL
STANDARD T42 PANEL
STANDARD T48 PANEL
STANDARD T54 PANEL
STANDARD T60 PANEL
STANDARD T66 PANEL
STANDARD T72 PANEL
STANDARD T78 PANEL
ALL PANELS ARE SHOWN BACK FACE VIEW
#4 DOWEL (TYP.)
GEOGRID TAB LOCATION
GEOGRID TAB LOCATIONS
REINFORCING STEEL REQUIREMENTS
STANDARD STEEL LAYOUT
HORIZONTAL: #4 BARS (60 KSI) @ 1'- 6"O.C. (MAX.)
VERTICAL: #3 BARS (60 KSI) @ 10" O.C. (MAX.)
OR
STANDARD WWF LAYOUT
4X4-W4.0XW4.0 WELDED WIRE MESH
FABRICATION PER ASTM A-185
NOTE: ALL TOP PANELS WILL HAVE 2 #4 DOWELS CAST 6" INTO THE TOP OF EACH PANEL.
GEOGRID TAB LOCATIONS ARE PROJECT SPECIFIC
REVISIONS \ ISSUE
0 5/9/04 ISSUED FOR REVIEW
Tensar*
Tensar Earth Technologies, Inc.
5883 Glenridge Drive, Suite 200
Atlanta, Georgia 30328
(404) 250-1090
STANDARD ARES PRECAST PANEL RETAINING WALL DETAILS
ARES ARTICULATED PANELS
Sheet Number
5 of 19

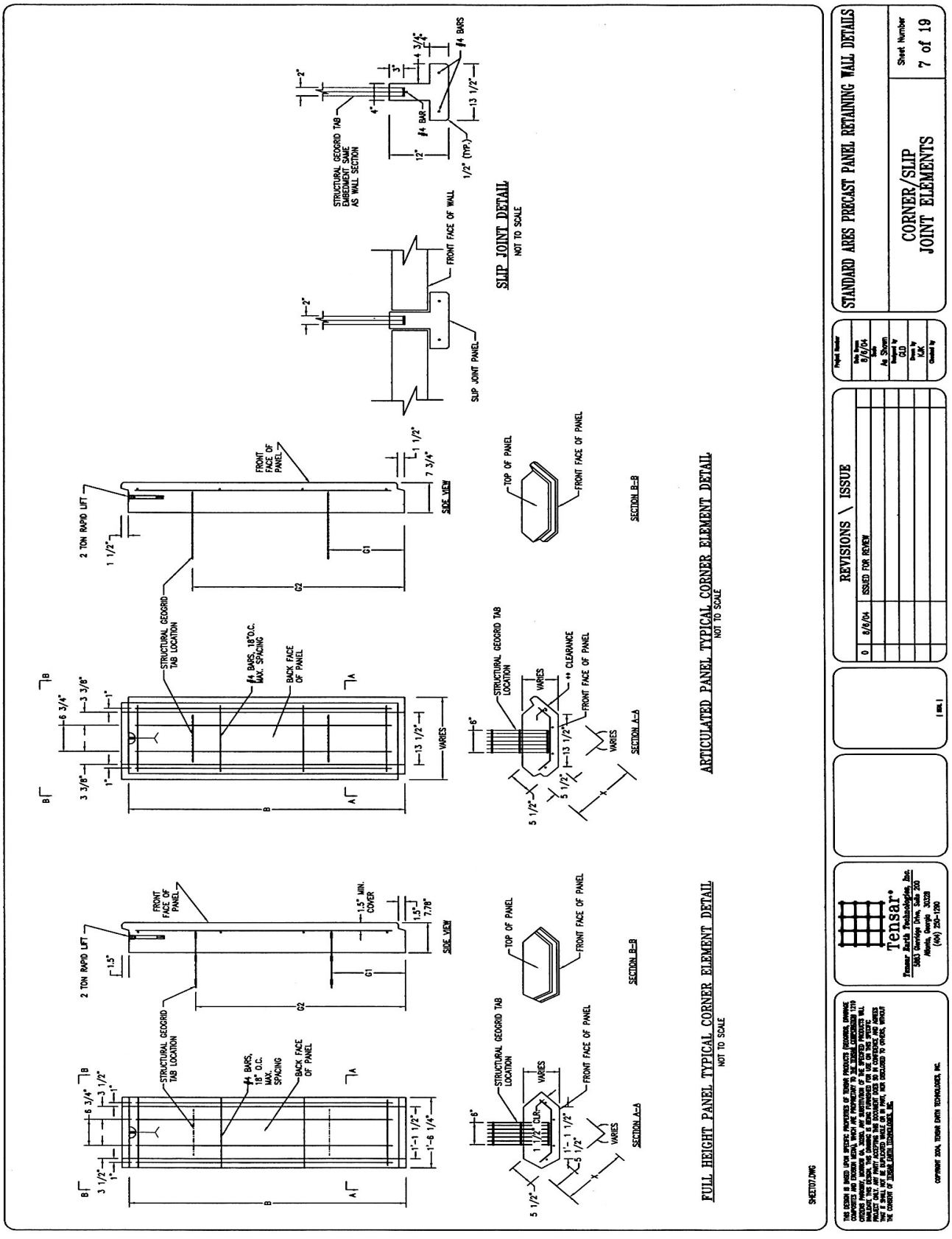
STANDARD ARES PRECAST PANEL RETAINING WALL DETAILS
CORNER/SLIP JOINT ELEMENTS
Sheet Number
7 of 19
REVISIONS \ ISSUE
0 8/6/04 ISSUED FOR REVIEW
Tensar
FULL HEIGHT PANEL TYPICAL CORNER ELEMENT DETAIL
NOT TO SCALE
ARTICULATED PANEL TYPICAL CORNER ELEMENT DETAIL
NOT TO SCALE
SLIP JOINT DETAIL
NOT TO SCALE
SIDE VIEW
SECTION A-A
SECTION B-B
2 TON RAPID LIFT
STRUCTURAL GEOGRID TAB LOCATION
#4 BARS, 18" O.C. MAX. SPACING
BACK FACE OF PANEL
FRONT FACE OF PANEL
TOP OF PANEL
FRONT FACE OF WALL
SLIP JOINT PANEL
STRUCTURAL GEOGRID TAB EMBEDMENT SAME AS WALL SECTION
#4 BARS
#4 BAR
1/2" (TYP.)
VARIES
** CLEARANCE
1.5" MIN. COVER
SHEET07.DWG

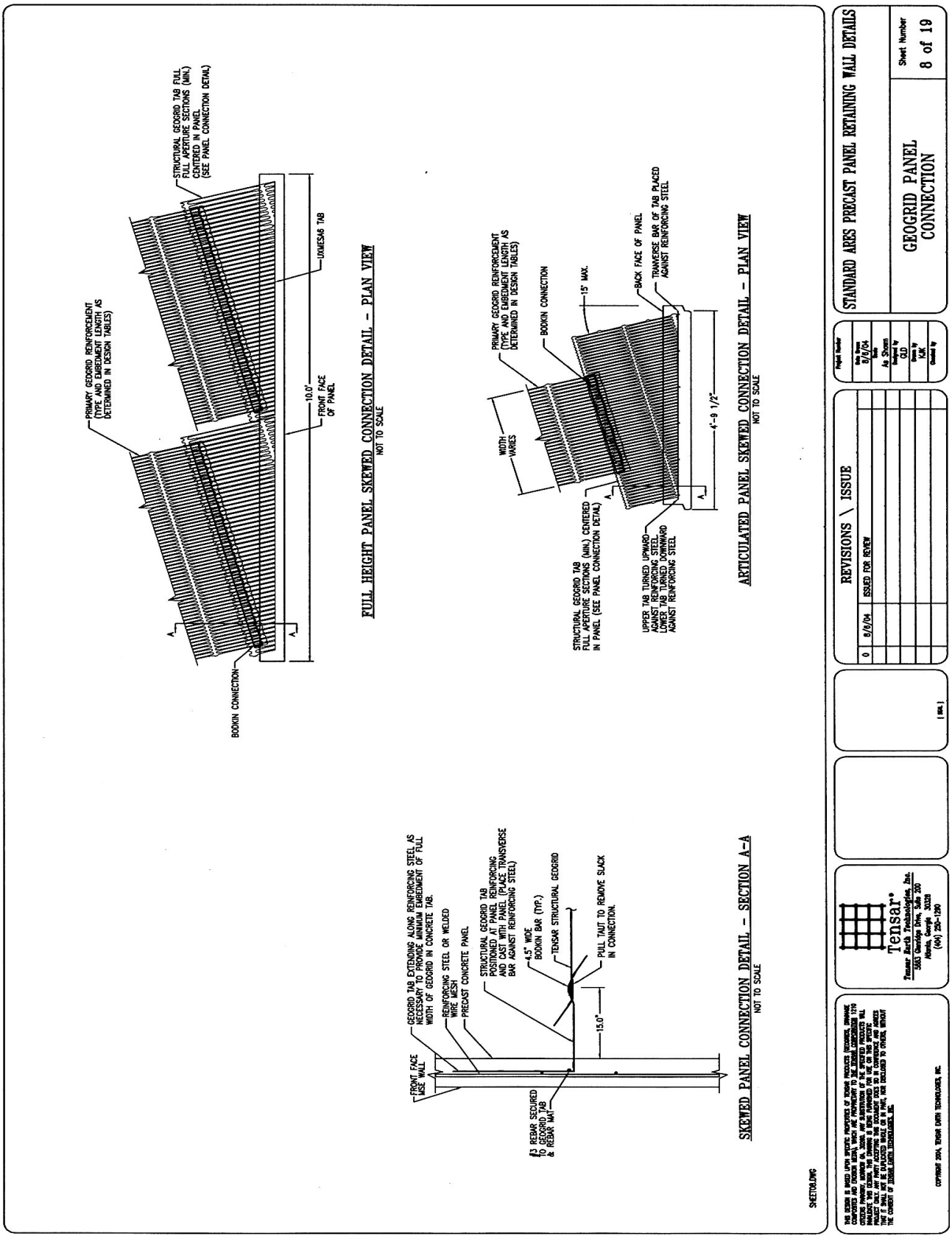
PRIMARY GEOGRID REINFORCEMENT (TYPE AND EMBEDMENT LENGTH AS DETERMINED IN DESIGN TABLES)
STRUCTURAL GEOGRID TAB FULL FULL APERTURE SECTIONS (MIN.) CENTERED IN PANEL (SEE PANEL CONNECTION DETAIL)
UNIMESH6 TAB
10.0'
FRONT FACE OF PANEL
BOOKIN CONNECTION
FULL HEIGHT PANEL SKEWED CONNECTION DETAIL - PLAN VIEW
NOT TO SCALE
PRIMARY GEOGRID REINFORCEMENT (TYPE AND EMBEDMENT LENGTH AS DETERMINED IN DESIGN TABLES)
BOOKIN CONNECTION
15" MAX.
BACK FACE OF PANEL
TRANSVERSE BAR OF TAB PLACED AGAINST REINFORCING STEEL
WIDTH VARIES
4'-9 1/2"
STRUCTURAL GEOGRID TAB FULL APERTURE SECTIONS (MIN.) CENTERED IN PANEL (SEE PANEL CONNECTION DETAIL)
UPPER TAB TURNED UPWARD AGAINST REINFORCING STEEL LOWER TAB TURNED DOWNWARD AGAINST REINFORCING STEEL
ARTICULATED PANEL SKEWED CONNECTION DETAIL - PLAN VIEW
NOT TO SCALE
GEOGRID TAB EXTENDING ALONG REINFORCING STEEL AS NECESSARY TO PROVIDE MINIMUM EMBEDMENT OF FULL WIDTH OF GEOGRID IN CONCRETE TAB.
REINFORCING STEEL OR WELDED WIRE MESH
PRECAST CONCRETE PANEL
STRUCTURAL GEOGRID TAB POSITIONED AT PANEL REINFORCING AND CAST WITH PANEL (PLACE TRANSVERSE BAR AGAINST REINFORCING STEEL)
4.5" WIDE BOOKIN BAR (TYP.)
TENSAR STRUCTURAL GEOGRID
PULL TAUT TO REMOVE SLACK IN CONNECTION.
15.0"
FRONT FACE PCSE WALL
#3 REBAR SECURED TO GEOGRID TAB & REBAR MAT
SKEWED PANEL CONNECTION DETAIL - SECTION A-A
NOT TO SCALE
SHEETFOLDING
REVISIONS \ ISSUE
0 8/8/04 ISSUED FOR REVIEW
Project Number
Date Drawn 8/4/04
Drawn
Jo Shorn
Reviewed by QLD
Done by KJK
Checked by
STANDARD ARES PRECAST PANEL RETAINING WALL DETAILS
GEOGRID PANEL CONNECTION
Sheet Number 8 of 19
Tensar
Tensar Earth Technologies, Inc.
5883 Glenridge Drive, Suite 350
Atlanta, Georgia 30328
(404) 250-1290
THIS DESIGN IS BASED UPON SPECIFIC PROPERTIES OF TENSAR PRODUCTS DESCRIBED HEREIN. SUBSTITUTION OF NON-TENSAR PRODUCTS WILL VOID TENSAR'S RESPONSIBILITY FOR THE DESIGN. TENSAR PRODUCTS WILL BE SUPPLIED IN ACCORDANCE WITH TENSAR'S STANDARD SPECIFICATIONS UNLESS OTHERWISE AGREED IN WRITING. THIS DESIGN, THE DRAWINGS IN WHICH IT IS SHOWN AND THE SPECIFIC PRODUCTS TO WHICH IT REFERS ARE THE PROPERTY OF TENSAR EARTH TECHNOLOGIES, INC. AND ARE NOT TO BE USED, REPRODUCED OR ASSIGNED TO ANY PERSON OR ENTITY WITHOUT THE CONSENT OF TENSAR EARTH TECHNOLOGIES, INC.
COPYRIGHT 2004, TENSAR EARTH TECHNOLOGIES, INC.

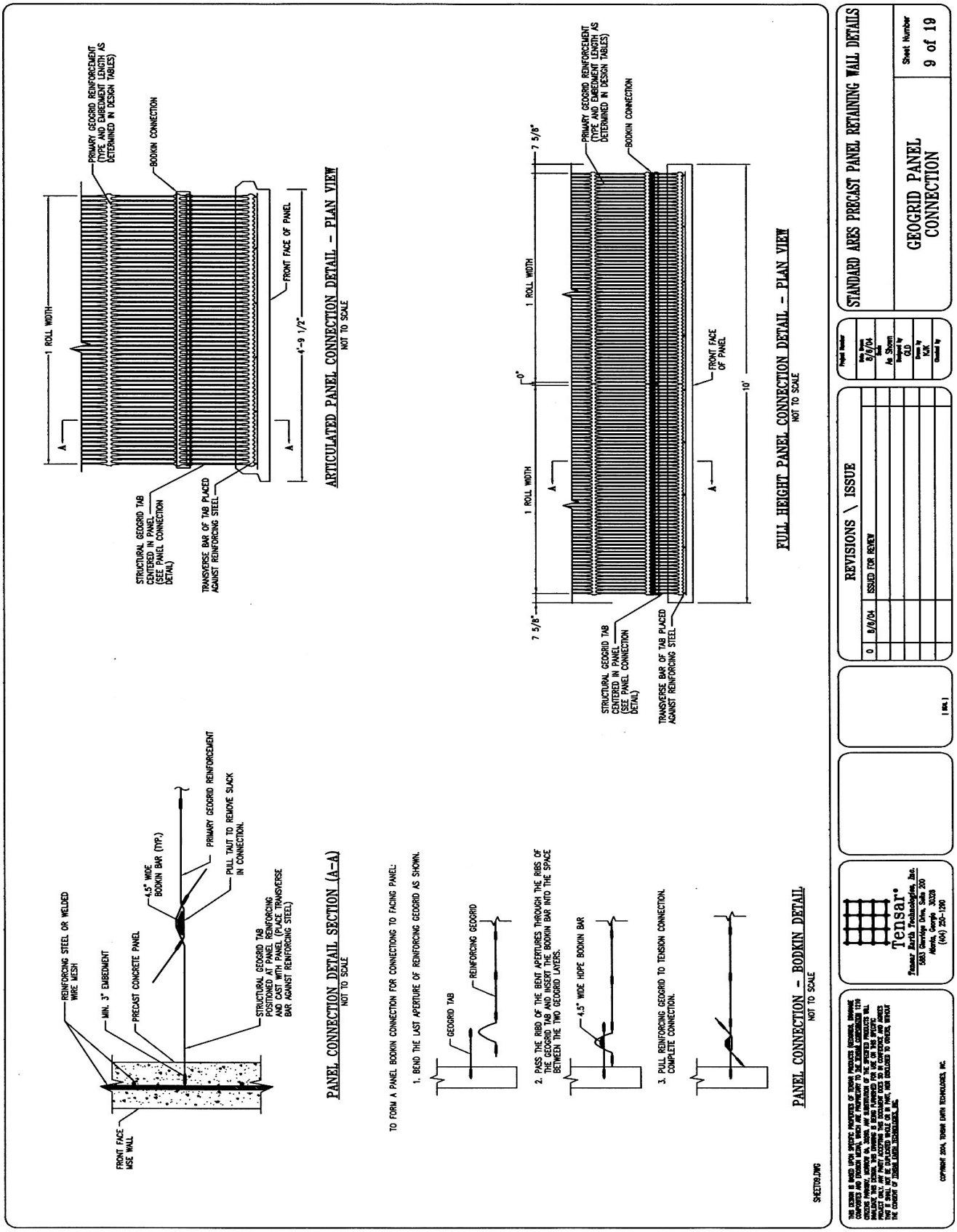
PRIMARY GEOGRID REINFORCEMENT (TYPE AND EMBEDMENT LENGTH AS DETERMINED IN DESIGN TABLES)
BODKIN CONNECTION
1 ROLL WIDTH
FRONT FACE OF PANEL
4'-9 1/2"
STRUCTURAL GEOGRID TAB CENTERED IN PANEL (SEE PANEL CONNECTION DETAIL)
TRANSVERSE BAR OF TAB PLACED AGAINST REINFORCING STEEL
ARTICULATED PANEL CONNECTION DETAIL - PLAN VIEW
NOT TO SCALE
7 5/8"
0"
10'
FULL HEIGHT PANEL CONNECTION DETAIL - PLAN VIEW
NOT TO SCALE
REINFORCING STEEL OR WELDED WIRE MESH
MIN. 3" EMBEDMENT
PRECAST CONCRETE PANEL
4.5" WIDE BODKIN BAR (TYP.)
PRIMARY GEOGRID REINFORCEMENT
PULL TAUT TO REMOVE SLACK IN CONNECTION.
STRUCTURAL GEOGRID TAB POSITIONED AT PANEL REINFORCING AND CAST WITH PANEL (PLACE TRANSVERSE BAR AGAINST REINFORCING STEEL)
FRONT FACE MSE WALL
PANEL CONNECTION DETAIL SECTION (A-A)
NOT TO SCALE
TO FORM A PANEL BODKIN CONNECTION FOR CONNECTIONG TO FACING PANEL:
1. BEND THE LAST APERTURE OF REINFORCING GEOGRID AS SHOWN.
GEOGRID TAB
REINFORCING GEOGRID
2. PASS THE RIBD OF THE BENT APERTURES THROUGH THE RIBS OF THE GEOGRID TAB AND INSERT THE BODKIN BAR INTO THE SPACE BETWEEN THE TWO GEOGRID LAYERS.
4.5" WIDE HDPE BODKIN BAR
3. PULL REINFORCING GEOGRID TO TENSION CONNECTION. COMPLETE CONNECTION.
PANEL CONNECTION - BODKIN DETAIL
NOT TO SCALE
SHEET09.DWG
REVISIONS \ ISSUE
0 8/6/04 ISSUED FOR REVIEW
Tensar
Tensar Earth Technologies, Inc.
5883 Glenridge Drive, Suite 200
Atlanta, Georgia 30328
(404) 250-1290
STANDARD ARES PRECAST PANEL RETAINING WALL DETAILS
GEOGRID PANEL CONNECTION
Sheet Number
9 of 19

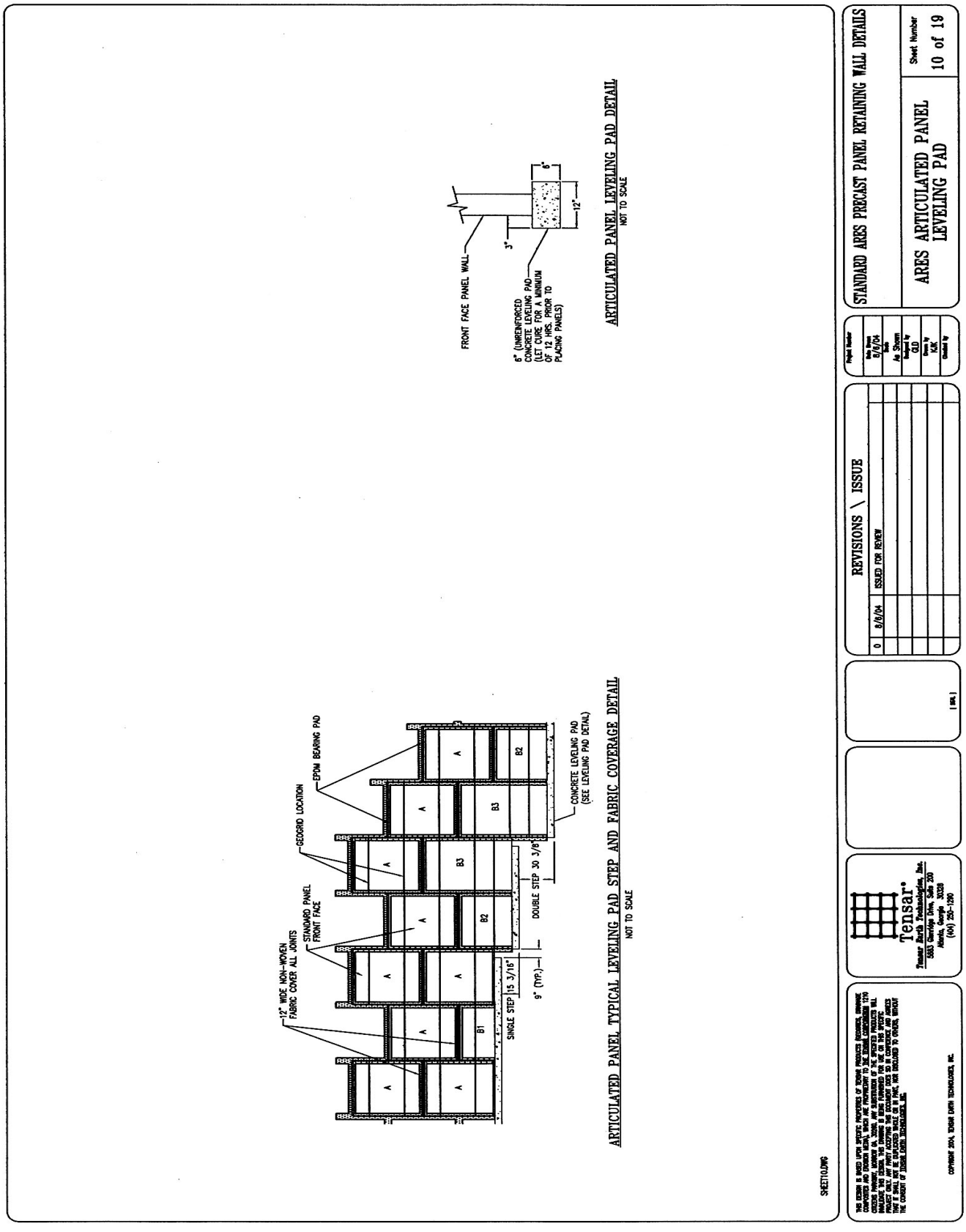
ARTICULATED PANEL LEVELING PAD DETAIL
NOT TO SCALE
FRONT FACE PANEL WALL
6" (UNREINFORCED CONCRETE LEVELING PAD (LET CURE FOR A MINIMUM OF 12 HRS. PRIOR TO PLACING PANELS)
3"
12"
6"
ARTICULATED PANEL TYPICAL LEVELING PAD STEP AND FABRIC COVERAGE DETAIL
NOT TO SCALE
12" WIDE NON-WOVEN FABRIC COVER ALL JOINTS
STANDARD PANEL FRONT FACE
GEOGRID LOCATION
EPDM BEARING PAD
CONCRETE LEVELING PAD (SEE LEVELING PAD DETAIL)
SINGLE STEP 15 3/16"
9" (TYP.)
DOUBLE STEP 30 3/8"
A
B1
B2
B3
SHEET10.DWG
REVISIONS \ ISSUE
0 8/6/04 ISSUED FOR REVIEW
Tensar
Tensar Earth Technologies, Inc.
5883 Glenridge Drive, Suite 200
Atlanta, Georgia 30328
(404) 250-1290
STANDARD ARES PRECAST PANEL RETAINING WALL DETAILS
ARES ARTICULATED PANEL LEVELING PAD
Sheet Number
10 of 19

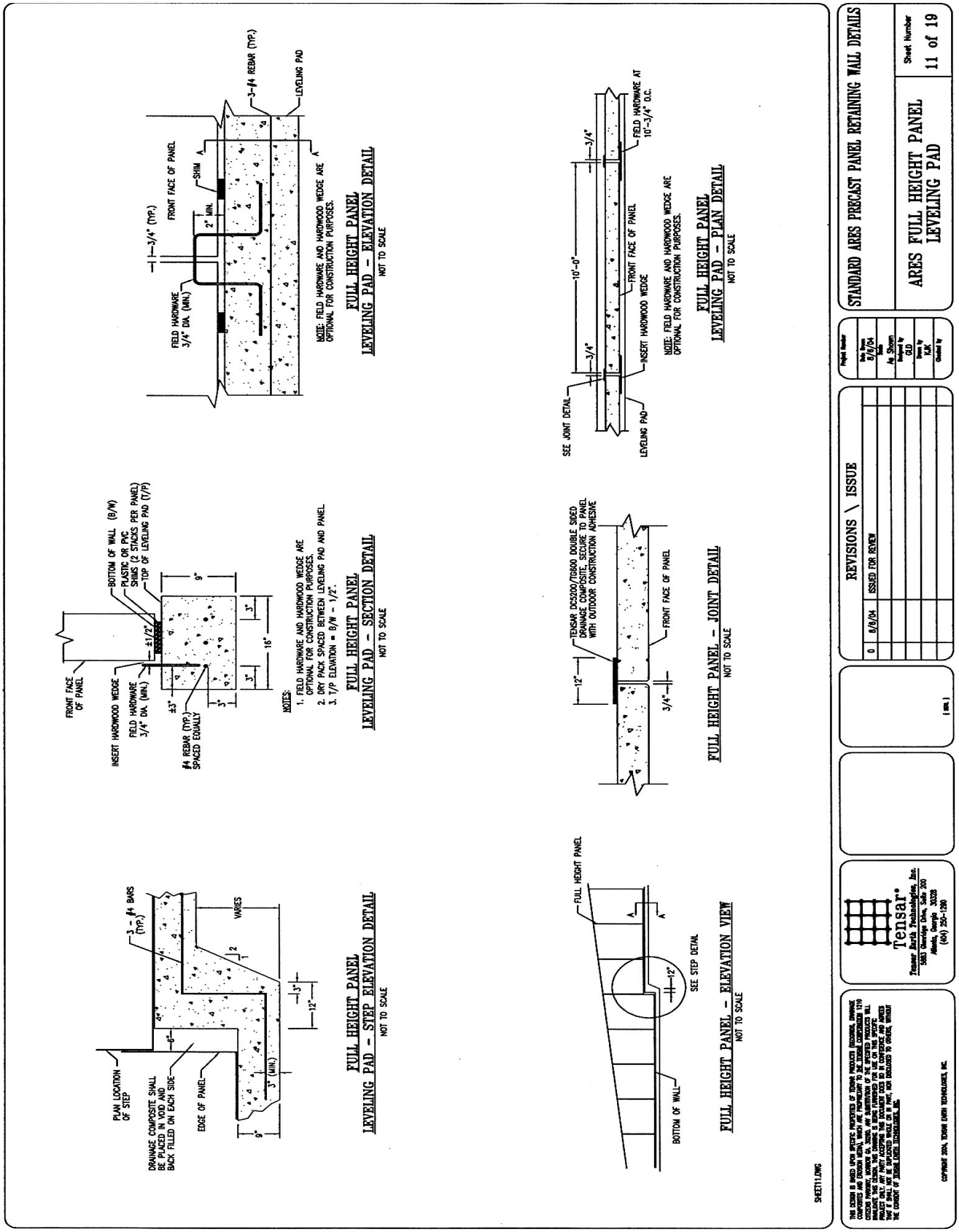
FULL HEIGHT PANEL
LEVELING PAD - STEP ELEVATION DETAIL
NOT TO SCALE
FULL HEIGHT PANEL
LEVELING PAD - SECTION DETAIL
NOT TO SCALE
FULL HEIGHT PANEL
LEVELING PAD - ELEVATION DETAIL
NOT TO SCALE
FULL HEIGHT PANEL
LEVELING PAD - PLAN DETAIL
NOT TO SCALE
FULL HEIGHT PANEL - JOINT DETAIL
NOT TO SCALE
FULL HEIGHT PANEL - ELEVATION VIEW
NOT TO SCALE
STANDARD ARES PRECAST PANEL RETAINING WALL DETAILS
ARES FULL HEIGHT PANEL
LEVELING PAD
Sheet Number
11 of 19
REVISIONS \ ISSUE
0 8/8/04 ISSUED FOR REVIEW
Tensar
Tensar Earth Technologies, Inc.
5883 Glenridge Drive, Suite 200
Atlanta, Georgia 30328
(404) 250-1290
COPYRIGHT 2004, TENSAR EARTH TECHNOLOGIES, INC.

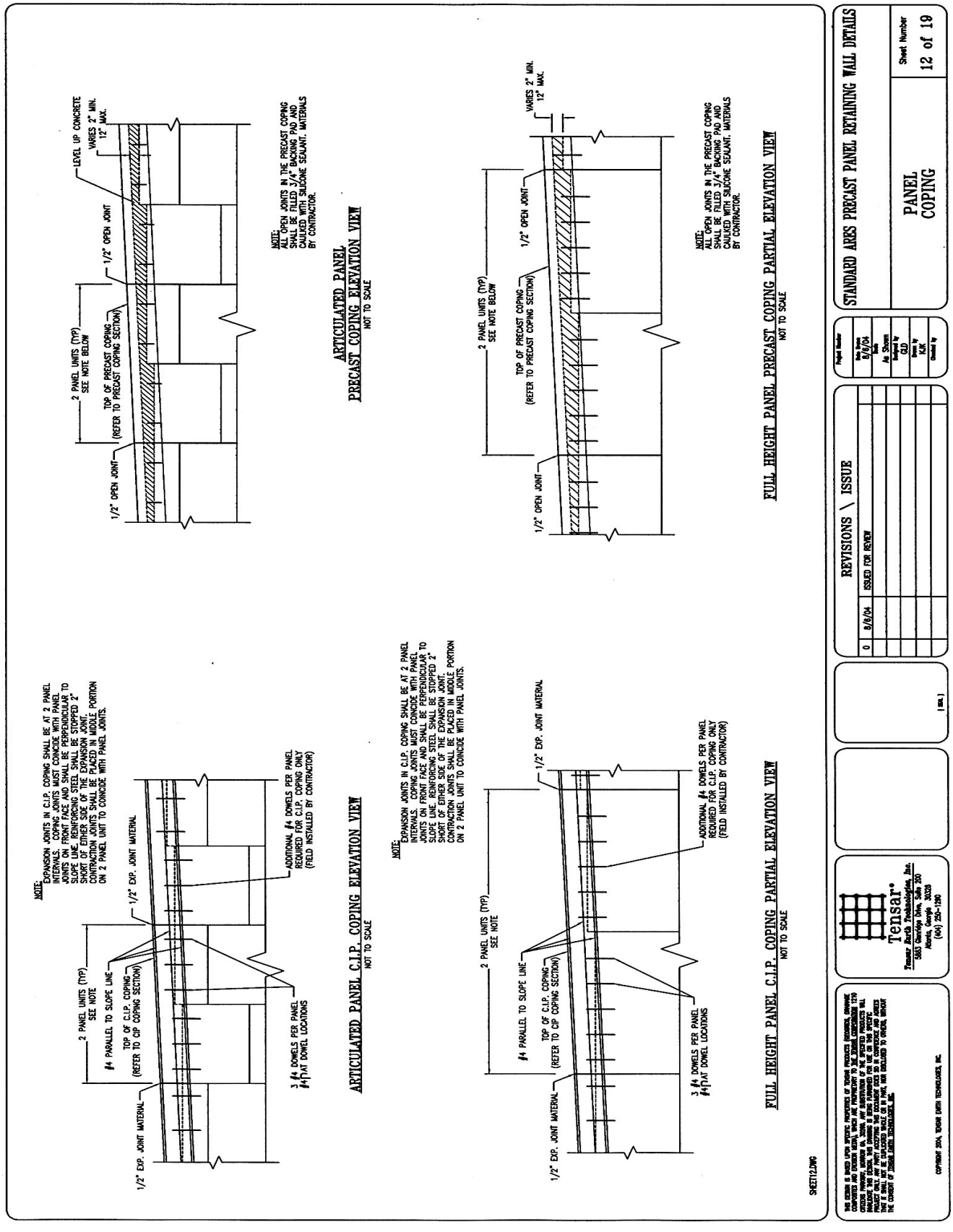
NOTE:
EXPANSION JOINTS IN C.I.P. COPING SHALL BE AT 2 PANEL INTERVALS. COPING JOINTS MUST COINCIDE WITH PANEL JOINTS ON FRONT FACE AND SHALL BE PERPENDICULAR TO SLOPE LINE. REINFORCING STEEL SHALL BE STOPPED 2" SHORT OF EITHER SIDE OF THE EXPANSION JOINT. CONTRACTION JOINTS SHALL BE PLACED IN MIDDLE PORTION ON 2 PANEL UNIT TO COINCIDE WITH PANEL JOINTS.
2 PANEL UNITS (TYP) SEE NOTE
#4 PARALLEL TO SLOPE LINE
TOP OF C.I.P. COPING (REFER TO CIP COPING SECTION)
1/2" EXP. JOINT MATERIAL
ADDITIONAL #4 DOWELS PER PANEL REQUIRED FOR C.I.P. COPING ONLY (FIELD INSTALLED BY CONTRACTOR)
3 #4 DOWELS PER PANEL @1/3 AT DOWEL LOCATIONS
ARTICULATED PANEL C.I.P. COPING ELEVATION VIEW
NOT TO SCALE
NOTE:
EXPANSION JOINTS IN C.I.P. COPING SHALL BE AT 2 PANEL INTERVALS. COPING JOINTS MUST COINCIDE WITH PANEL JOINTS ON FRONT FACE AND SHALL BE PERPENDICULAR TO SLOPE LINE. REINFORCING STEEL SHALL BE STOPPED 2" SHORT OF EITHER SIDE OF THE EXPANSION JOINT. CONTRACTION JOINTS SHALL BE PLACED IN MIDDLE PORTION ON 2 PANEL UNIT TO COINCIDE WITH PANEL JOINTS.
2 PANEL UNITS (TYP) SEE NOTE
#4 PARALLEL TO SLOPE LINE
TOP OF C.I.P. COPING (REFER TO CIP COPING SECTION)
1/2" EXP. JOINT MATERIAL
ADDITIONAL #4 DOWELS PER PANEL REQUIRED FOR C.I.P. COPING ONLY (FIELD INSTALLED BY CONTRACTOR)
3 #4 DOWELS PER PANEL @1/3 AT DOWEL LOCATIONS
FULL HEIGHT PANEL C.I.P. COPING PARTIAL ELEVATION VIEW
NOT TO SCALE
2 PANEL UNITS (TYP) SEE NOTE
TOP OF PRECAST COPING (REFER TO PRECAST COPING SECTION)
1/2" OPEN JOINT
LEVEL UP CONCRETE
VARIES 2" MIN. 12" MAX.
NOTE:
ALL OPEN JOINTS IN THE PRECAST COPING SHALL BE FILLED 3/4" BACKING PAD AND CAULKED WITH SILICONE SEALANT. MATERIALS BY CONTRACTOR.
ARTICULATED PANEL
PRECAST COPING ELEVATION VIEW
NOT TO SCALE
2 PANEL UNITS (TYP) SEE NOTE BELOW
TOP OF PRECAST COPING (REFER TO PRECAST COPING SECTION)
1/2" OPEN JOINT
VARIES 2" MIN. 12" MAX.
NOTE:
ALL OPEN JOINTS IN THE PRECAST COPING SHALL BE FILLED 3/4" BACKING PAD AND CAULKED WITH SILICONE SEALANT. MATERIALS BY CONTRACTOR.
FULL HEIGHT PANEL PRECAST COPING PARTIAL ELEVATION VIEW
NOT TO SCALE
SHEET12.DWG
THIS DESIGN IS BASED UPON SPECIFIC PROPERTIES OF TENSAR PRODUCTS DESCRIBED, SHOWING COMPONENTS AND DESIGNS HEREIN, WHICH ARE PROPRIETARY TO THE TENSAR CORPORATION ITS AFFILIATES AND LICENSORS. TENSAR EARTH TECHNOLOGIES, INC. MAKES NO WARRANTIES OR REPRESENTATIONS OF ANY KIND AS TO THE SUITABILITY OF ITS PRODUCTS FOR ANY PARTICULAR PROJECT. THE USER IS RESPONSIBLE FOR THE DESIGN OF THE ENTIRE PROJECT AND ALL ITS COMPONENTS. ANY PARTY ACCEPTING THIS DOCUMENT AGREES THAT IT SHALL NOT BE EMPLOYED WHOLE OR IN PART, NOR DISCLOSED TO OTHERS, WITHOUT THE CONSENT OF TENSAR EARTH TECHNOLOGIES, INC.
COPYRIGHT 2004, TENSAR EARTH TECHNOLOGIES, INC.
Tensar
Tensar Earth Technologies, Inc.
5883 Glenridge Drive, Suite 200
Atlanta, Georgia 30328
(404) 250-1290
REVISIONS \ ISSUE
0 8/6/04 ISSUED FOR REVIEW
Project Number
Date Drawn 8/6/04
Scale As Shown
Designed by CJD
Drawn by AJK
Checked by
STANDARD ARES PRECAST PANEL RETAINING WALL DETAILS
PANEL COPING
Sheet Number 12 of 19

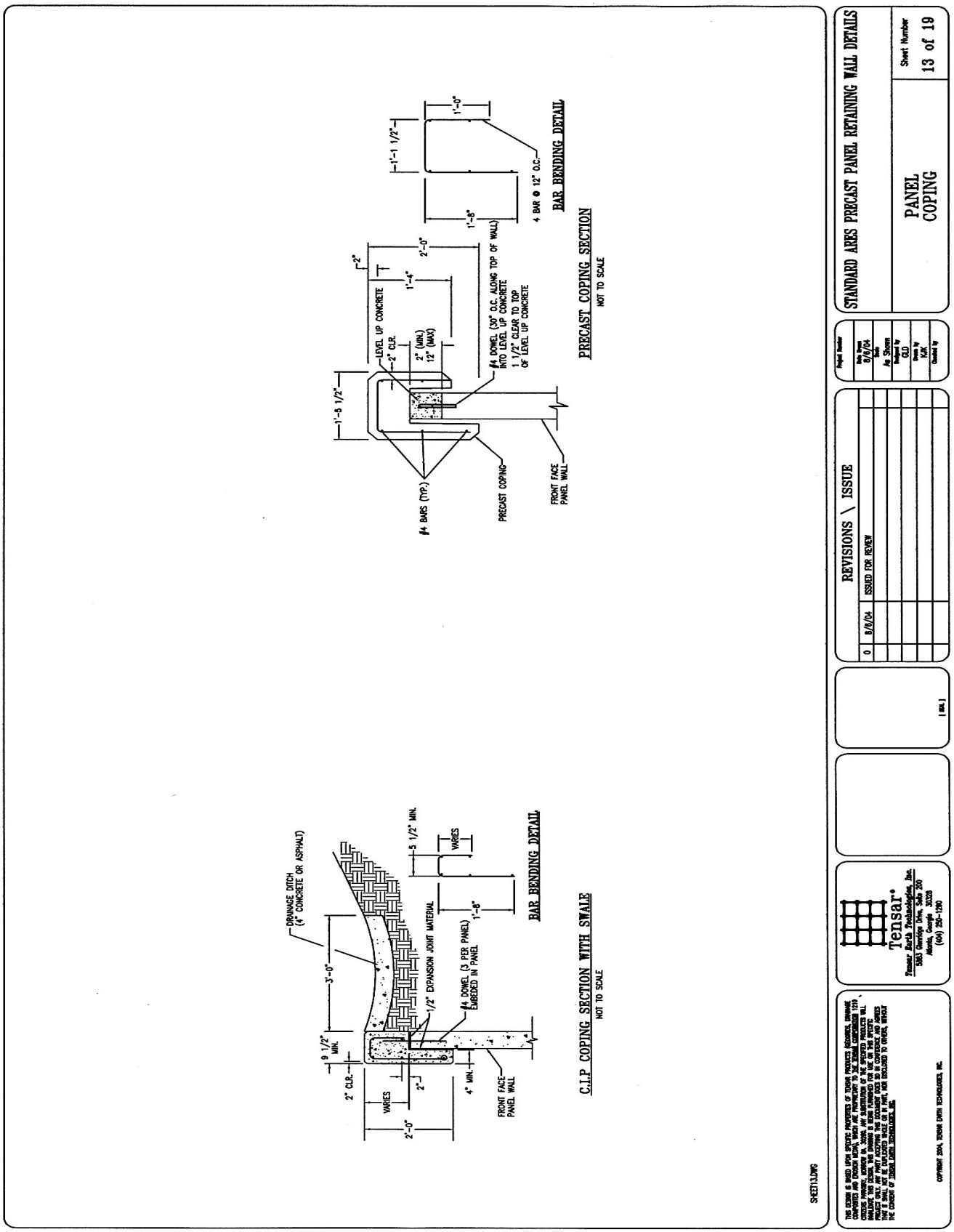
STANDARD ARES PRECAST PANEL RETAINING WALL DETAILS
PANEL COPING
Sheet Number 13 of 19
REVISIONS \ ISSUE
0 3/5/04 ISSUED FOR REVIEW
Tensar
Tensar Earth Technologies, Inc.
5883 Glenridge Drive, Suite 200
Atlanta, Georgia 30328
(404) 250-1390
PRECAST COPING SECTION
NOT TO SCALE
#4 BARS (TYP.)
PRECAST COPING
FRONT FACE PANEL WALL
LEVEL UP CONCRETE
2" CLR.
2" (MIN.) 12" (MAX)
#4 DOWEL (30" O.C. ALONG TOP OF WALL) INTO LEVEL UP CONCRETE 1 1/2" CLEAR TO TOP OF LEVEL UP CONCRETE
1'-5 1/2"
2"
1'-4"
2'-0"
BAR BENDING DETAIL
4 BAR @ 12" O.C.
1'-1 1/2"
1'-0"
1'-8"
C.I.P COPING SECTION WITH SWALE
NOT TO SCALE
DRAINAGE DITCH (4" CONCRETE OR ASPHALT)
3'-0"
9 1/2" MIN.
2" CLR.
VARIES
2'-0"
2"
1/2" EXPANSION JOINT MATERIAL
#4 DOWEL (3 PER PANEL) EMBEDDED IN PANEL
4" MIN.
FRONT FACE PANEL WALL
5 1/2" MIN.
VARIES
1'-8"
BAR BENDING DETAIL
SHEET3.DWG

3" MINIMUM GROUT
FILTER FABRIC, 12" (MIN.) BEHIND PRECAST FACING AND 18" (MIN.) AGAINST PIPE
PIPE WALL (24" MAX. PIPE DIAMETER)
18.0"
12.0"
SELECT FILL TYPE AND LIMITS (BY OTHERS)
REINFORCED FILL (TYP.)
ARES PRECAST PANEL
PENETRATION OF PRECAST FACING PREFORMED AT TIME OF CASTING
PIPE PENETRATION DETAIL
NOT TO SCALE
2x PIPE DIAMETER (MIN.)
℄
3" MIN. BETWEEN PIPE AND GEOGRID
15' (MAX.)
SETBACK VARIES
TYPICAL OBSTRUCTION AVOIDANCE DETAIL
NOT TO SCALE
MAX. DEFLECTION, 15°
5
1
PAVEMENT/OBSTRUCTION SECTION DEPTH VARIES, REFER TO CONTRACT DRAWINGS.
4" (MIN.)
FRONT FACE MSE WALL
HORIZONTAL PAVEMENT STRUCTURE
SUPERELEVATED SECTION
PAVING SECTION/OBSTRUCTION
4" (MIN.)
SLOPE GEOGRID TO MATCH ROADWAY SUPER-ELEVATION
FRONT FACE MSE WALL
SUPER-ELEVATED PAVEMENT/OBSTRUCTION STRUCTURE
NOTE:
CONTRACTOR IS RESPONSIBLE TO COORDINATE THE PLACEMENT OF THE GEOGRID TO AVOID CONFLICT WITH THE CONTRACT PAVEMENT/OBSTRUCTION SECTION. GEOGRID MUST BE SEPARATED FROM THE PAVEMENT/OBSTRUCTION SECTION BY A MINIMUM OF 4".
GEOGRID PLACEMENT AT PAVEMENT/OBSTRUCTION SECTION
NOT TO SCALE
SHEET14.DWG
THIS DESIGN IS BASED UPON SPECIFIC PROPERTIES OF TENSAR PRODUCTS DESCRIBED HEREIN. DRAWINGS, COMPUTERS AND DESIGNS HEREIN, WHICH ARE PROPRIETARY TO THE TENSAR CORPORATION (TTC) OR TENSAR POLYMER, MAURITIUS CO., LIMITED, ARE SUBMITTED FOR THE EXCLUSIVE PURPOSES WITH WHICH THEY ARE SUPPLIED BY TTC OR ITS AUTHORIZED AGENTS. THEY ARE NOT TO BE USED FOR ANY OTHER PROJECT ONLY. ANY PARTY ACCEPTING THIS DOCUMENT AGREES THAT IT SHALL NOT BE DUPLICATED WHOLLY OR IN PART, NOR DISCLOSED TO OTHERS, WITHOUT THE CONSENT OF TENSAR EARTH TECHNOLOGIES, INC.
COPYRIGHT 2004, TENSAR EARTH TECHNOLOGIES, INC.
Tensar
Tensar Earth Technologies, Inc.
5883 Glenridge Drive, Suite 200
Atlanta, Georgia 30328
(404) 250-1290
REVISIONS \ ISSUE
0 8/9/04 ISSUED FOR REVIEW
Project Number
Date Drawn 8/9/04
Scale As Shown
Designed by GLD
Drawn by KJK
Checked by
STANDARD ARES PRECAST PANEL RETAINING WALL DETAILS
OBSTRUCTIONS
Sheet Number 14 of 19

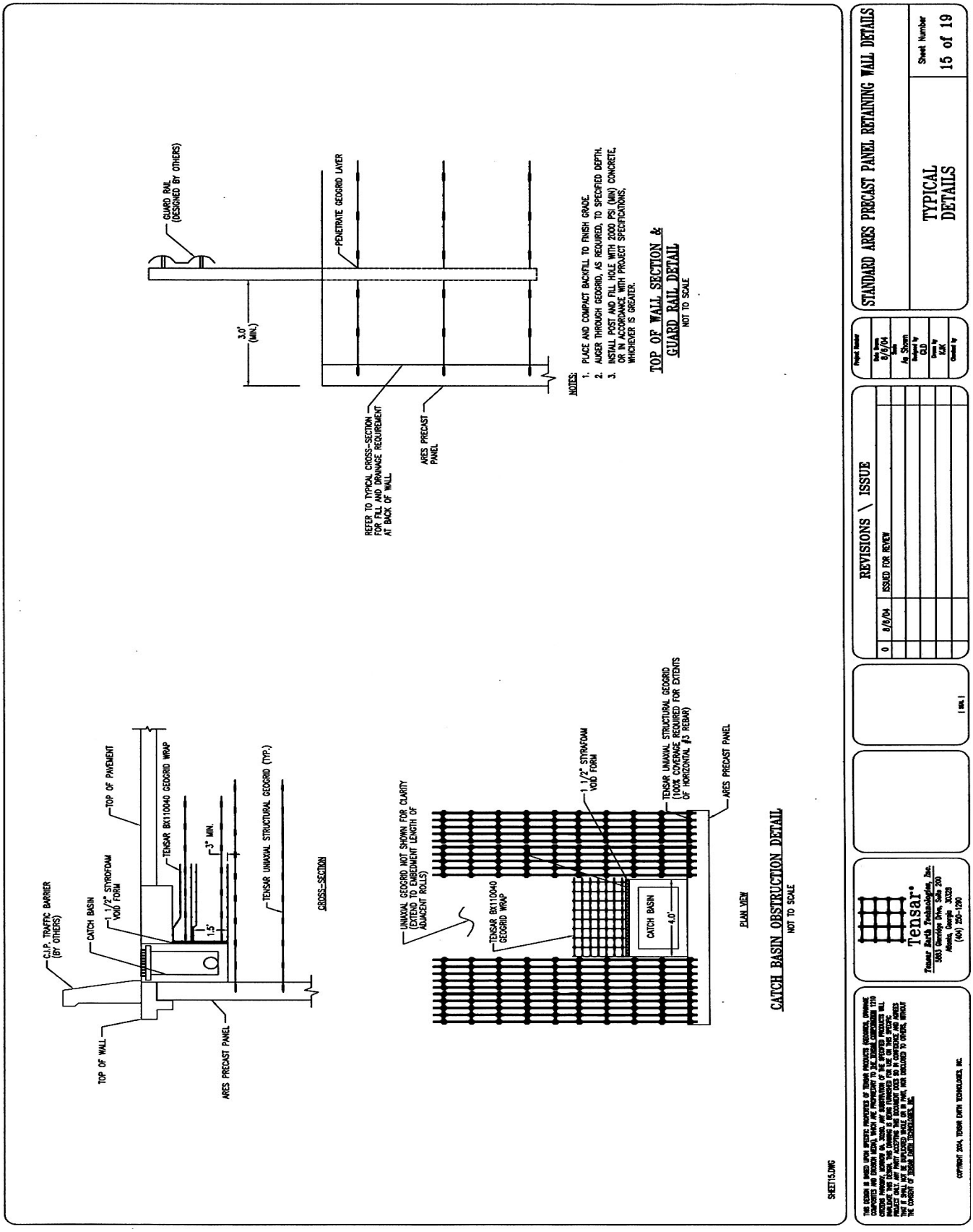
GUARD RAIL (DESIGNED BY OTHERS)
PENETRATE GEOGRID LAYER
3.0' (MIN.)
REFER TO TYPICAL CROSS-SECTION FOR FILL AND DRAINAGE REQUIREMENT AT BACK OF WALL.
ARES PRECAST PANEL
NOTES:
1. PLACE AND COMPACT BACKFILL TO FINISH GRADE.
2. AUGER THROUGH GEOGRID, AS REQUIRED, TO SPECIFIED DEPTH.
3. INSTALL POST AND FILL HOLE WITH 2000 PSI (MIN) CONCRETE, OR IN ACCORDANCE WITH PROJECT SPECIFICATIONS, WHICHEVER IS GREATER.
TOP OF WALL SECTION & GUARD RAIL DETAIL
NOT TO SCALE
C.I.P. TRAFFIC BARRIER (BY OTHERS)
CATCH BASIN
1 1/2" STYROFOAM VOID FORM
TOP OF PAVEMENT
TENSAR BX110040 GEOGRID WRAP
3" MIN.
1.5'
TENSAR UNIAXIAL STRUCTURAL GEOGRID (TYP.)
CROSS-SECTION
TOP OF WALL
ARES PRECAST PANEL
UNIAXIAL GEOGRID NOT SHOWN FOR CLARITY (EXTEND TO EMBEDMENT LENGTH OF ADJACENT ROLLS)
TENSAR BX110040 GEOGRID WRAP
1 1/2" STYROFOAM VOID FORM
TENSAR UNIAXIAL STRUCTURAL GEOGRID (100% COVERAGE REQUIRED FOR EXTENTS OF HORIZONTAL #3 REBAR)
ARES PRECAST PANEL
CATCH BASIN
4.0'
PLAN VIEW
CATCH BASIN OBSTRUCTION DETAIL
NOT TO SCALE
SHEET15.DWG
REVISIONS \ ISSUE
0 8/6/04 ISSUED FOR REVIEW
Tensar
Tensar Earth Technologies, Inc.
5883 Glenridge Drive, Suite 200
Atlanta, Georgia 30328
(404) 250-1290
STANDARD ARES PRECAST PANEL RETAINING WALL DETAILS
TYPICAL DETAILS
Sheet Number
15 of 19

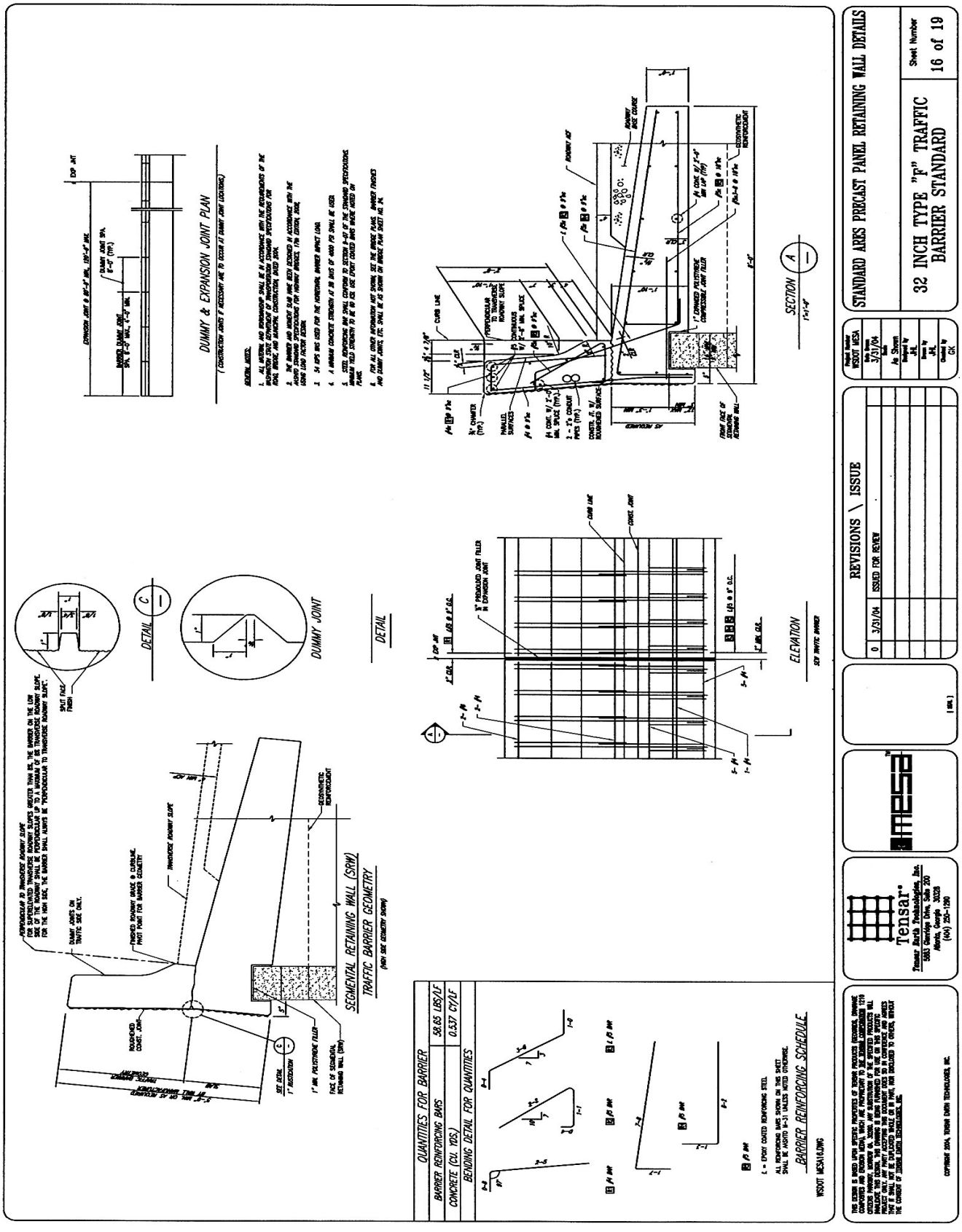
STANDARD ARES PRECAST PANEL RETAINING WALL DETAILS
32 INCH TYPE "F" TRAFFIC BARRIER STANDARD
Sheet Number 16 of 19
REVISIONS \ ISSUE
0 3/31/04 ISSUED FOR REVIEW
Tensar
DUMMY & EXPANSION JOINT PLAN
(CONSTRUCTION JOINTS IF NECESSARY ARE TO OCCUR AT DUMMY JOINT LOCATIONS)
DUMMY JOINT
DETAIL
SEGMENTAL RETAINING WALL (SRW)
TRAFFIC BARRIER GEOMETRY
(HIGH SIDE GEOMETRY SHOWN)
SECTION
ELEVATION
QUANTITIES FOR BARRIER
BARRIER REINFORCING BARS 58.65 LBS/LF
CONCRETE (C.Y. 10%) 0.537 CY/LF
BENDING DETAIL FOR QUANTITIES
BARRIER REINFORCING SCHEDULE
WSDOT MESA/LONG
COPYRIGHT 2004, TENSAR EARTH TECHNOLOGIES, INC.

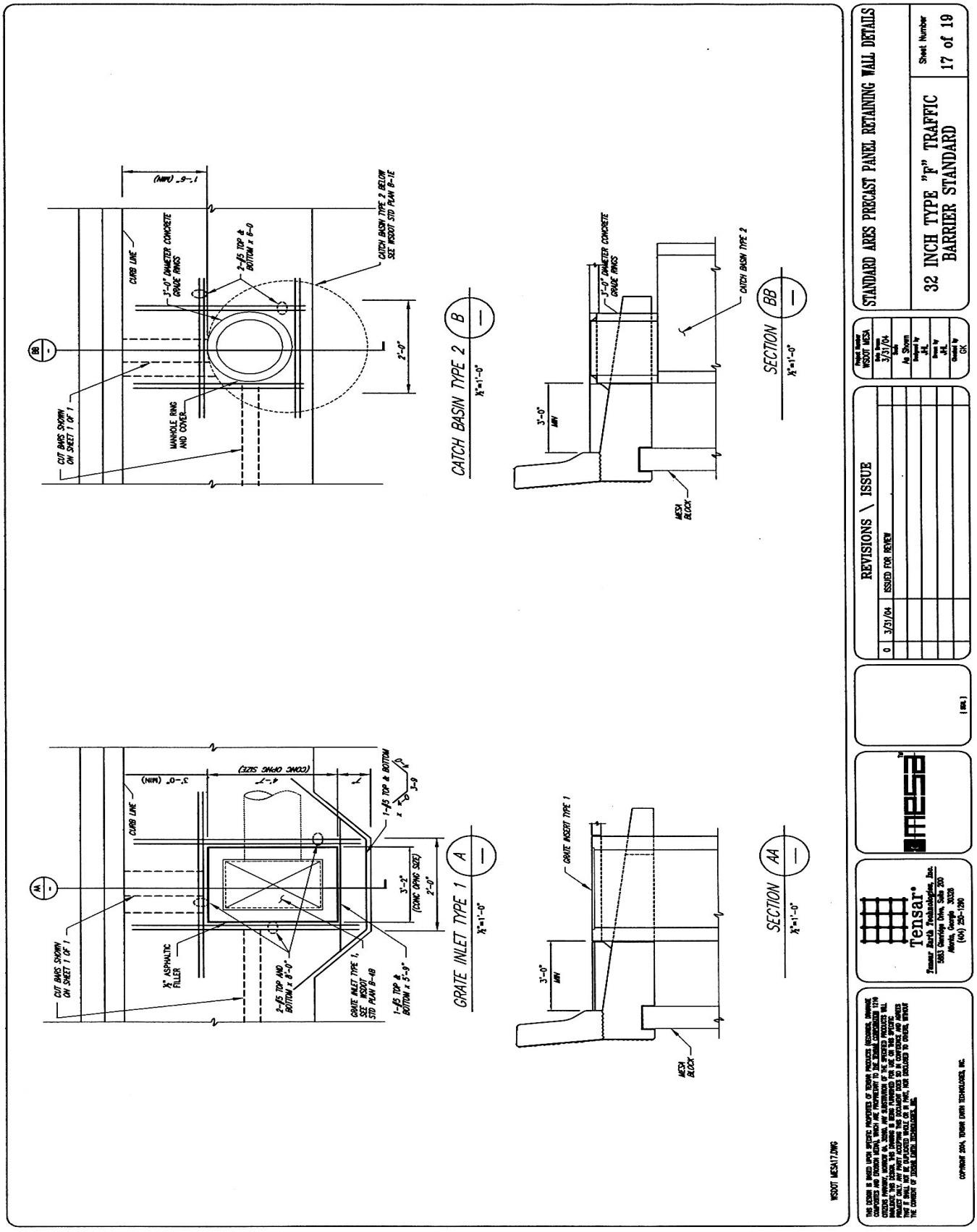
CATCH BASIN TYPE 2
SECTION
GRATE INLET TYPE 1
SECTION
CURB LINE
CUT BARS SHOWN ON SHEET 1 OF 1
MANHOLE RING AND COVER
CATCH BASIN TYPE 2, BELOW SEE WSDOT STD PLAN B-12
2'-0" DIAMETER CONCRETE GRADE RINGS
2-#5 TOP & BOTTOM x 6'-0
2'-0"
3'-0" MIN
MESH BLOCK
GRATE INSERT TYPE 1
CATCH BASIN TYPE 2
1-#5 TOP & BOTTOM x 5'-0"
GRATE INLET TYPE 1, SEE WSDOT STD PLAN B-48
2-#5 TOP AND BOTTOM x 6'-0"
1/2" ASPHALTIC FILLER
3'-0" (CONC OPNG SIZE)
4'-7" (CONC OPNG SIZE)
3'-0" (MIN)
REVISIONS \ ISSUE
0 3/31/04 ISSUED FOR REVIEW
STANDARD ARES PRECAST PANEL RETAINING WALL DETAILS
32 INCH TYPE "F" TRAFFIC BARRIER STANDARD
Sheet Number 17 of 19
Tensar
Tensar Earth Technologies, Inc.
5883 Glenridge Drive, Suite 200
Atlanta, Georgia 30328
(404) 250-1990
WSDOT MES417.DWG

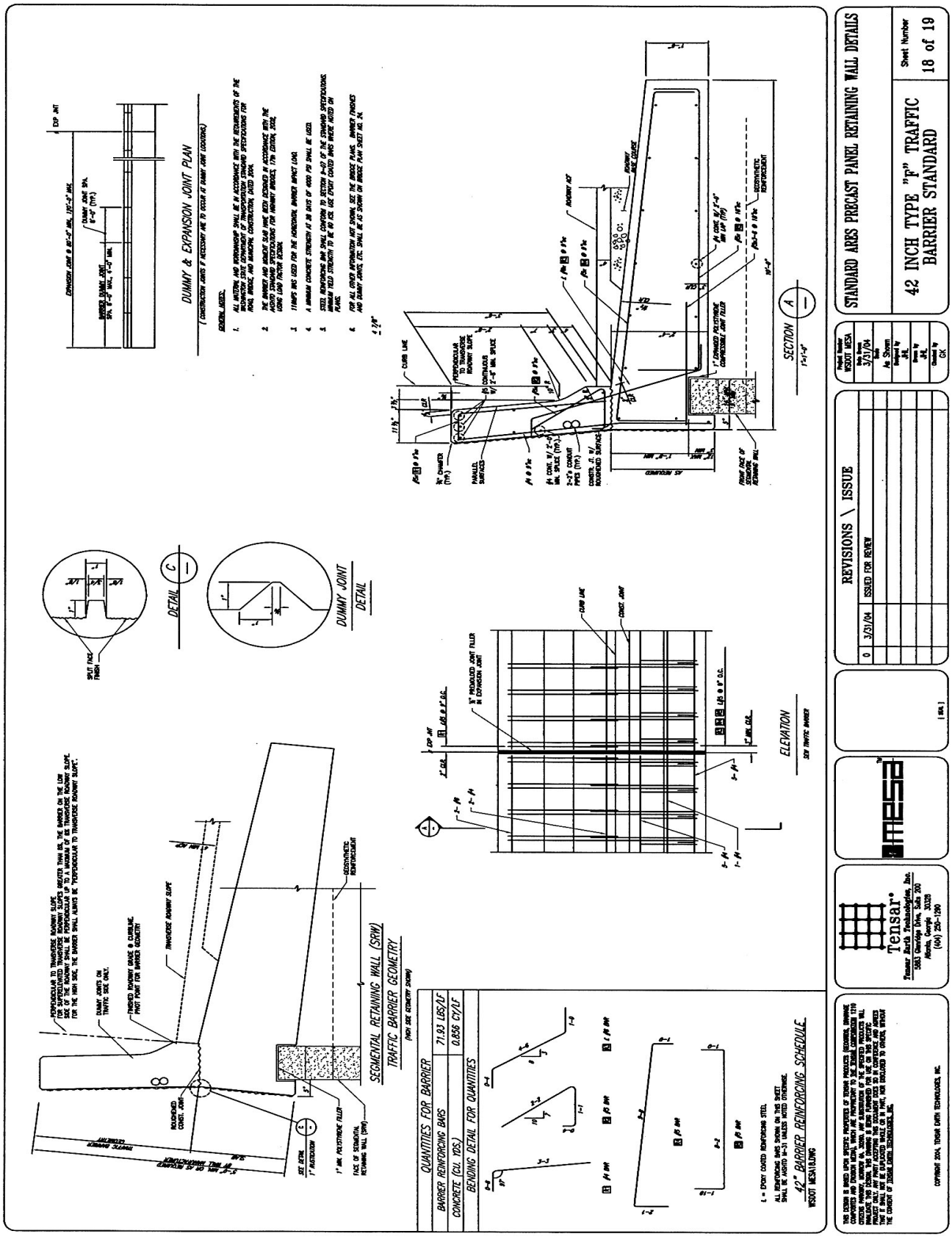
DUMMY & EXPANSION JOINT PLAN
DETAIL C
DUMMY JOINT DETAIL
SEGMENTAL RETAINING WALL (SRW) TRAFFIC BARRIER GEOMETRY
ELEVATION
SECTION A
42" BARRIER REINFORCING SCHEDULE
QUANTITIES FOR BARRIER
BARRIER REINFORCING BARS 21.93 LBS/LF
CONCRETE (CU. YDS.) 0.656 CY/LF
BENDING DETAIL FOR QUANTITIES
REVISIONS \ ISSUE
0 3/31/04 ISSUED FOR REVIEW
STANDARD ARES PRECAST PANEL RETAINING WALL DETAILS
42 INCH TYPE "F" TRAFFIC BARRIER STANDARD
Sheet Number 18 of 19
Tensar
mesa

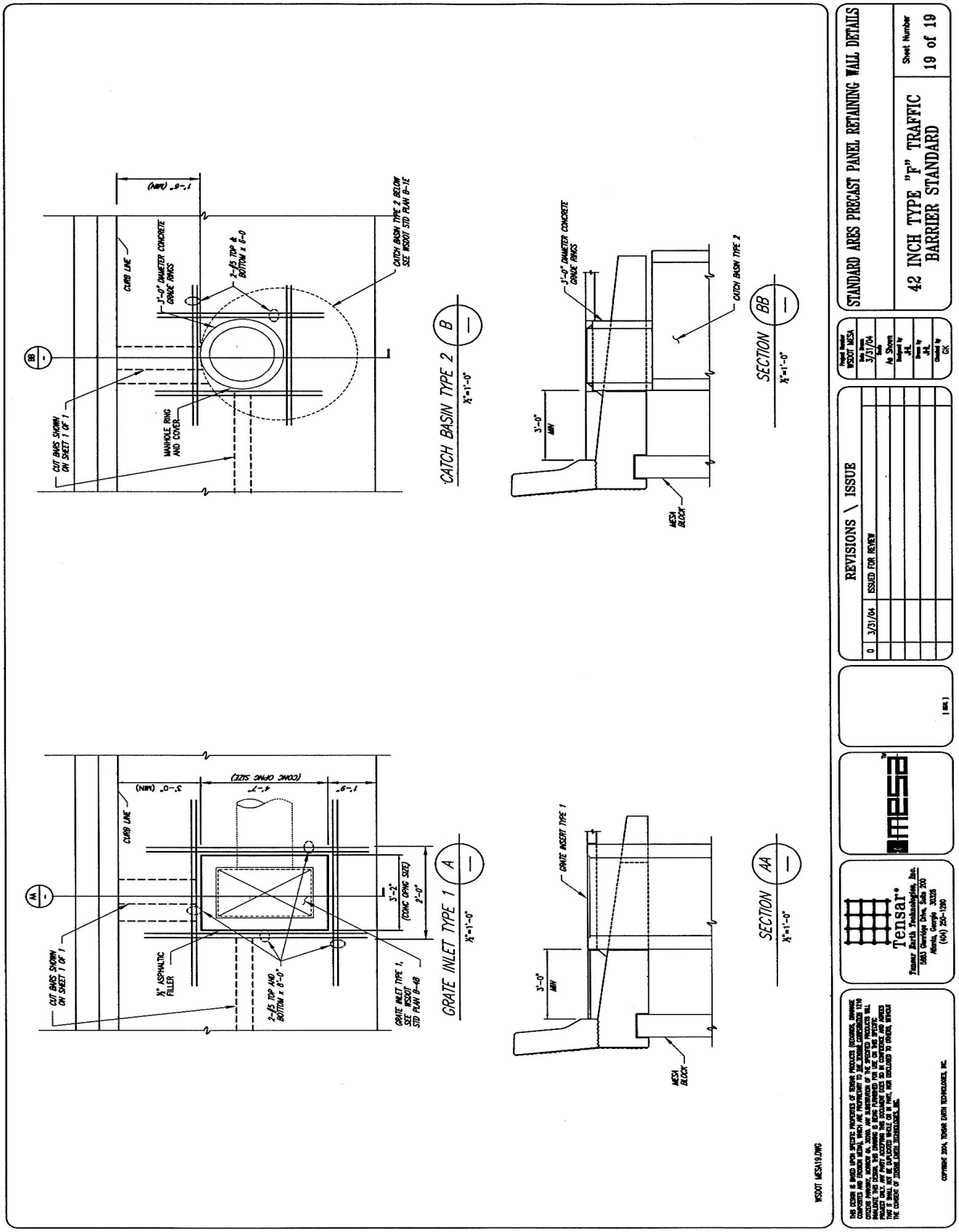
CATCH BASIN TYPE 2 B
SECTION BB
GRATE INLET TYPE 1 A
SECTION AA
STANDARD ARES PRECAST PANEL RETAINING WALL DETAILS
42 INCH TYPE "F" TRAFFIC BARRIER STANDARD
Sheet Number 19 of 19
REVISIONS \ ISSUE
0 3/31/04 ISSUED FOR REVIEW
Tensar Earth Technologies, Inc.
WSDOT MESA19.DWG

Appendix 15-L Preapproved Wall Appendix: Specific Requirements and Details for Tensar MESA Walls

In addition to the general design requirements provided in Appendix 15-A, the following specific requirements apply:

The detailed design methodology, design properties, and assumptions used by Tensar Earth Technologies for the MESA wall are summarized in the HITEC evaluation report for this wall system (HITEC, 2000, *Evaluation of the Tensar MESA Wall System*, ASCE, CERF Report No. 40358). The design methodology, which is based on the Standard Specifications for Highway Bridges (2002) is consistent with the general design requirements in Appendix 15-A, except as noted below. Interim approval is given for the continued use of the AASHTO Standard Specifications as the basis for design.

Considering the currently approved block dimensions, the maximum vertical spacing of reinforcement allowed to meet the requirements in the AASHTO Specifications is 2 feet. Regarding horizontal spacing of reinforcement strips (i.e., rolls), reinforcement coverage ratios of greater than 0.7 are acceptable for this wall system. This is based on having a maximum of one facing block between reinforcement rolls, as allowed by the AASHTO Specifications.

Reinforcement pullout shall be calculated based on the default values for geogrid reinforcement provided in the AASHTO Specifications. For LRFD based design, while it is recognized that product and soil type specific pullout interaction coefficients obtained in accordance with the AASHTO LRFD Specifications for the Tensar products used with this wall system are provided in the HITEC report for the MESA Wall system, pullout resistance design using these product and soil specific interaction coefficients has not been calibrated using the available product specific data statistics and reliability theory. Therefore, the specified resistance factors in the GDM and AASHTO LRFD Specifications should not be considered applicable to the product specific pullout interaction coefficients provided in the HITEC report.

The reinforcement long-term tensile strengths (T_{al}) provided in the *Qualified Products List* (QPL) for the Tensar Geogrid product series, which are based on the 2003 version of the product series, shall be used for wall design, until such time that they are updated, and the updated strengths approved for WSDOT use in accordance with WSDOT Standard Practice T 925. Until such time that the long-term reinforcement strengths are updated, it shall be verified that any material sent to the project site for this wall system is the 2003 version of the product. Furthermore, the short-term ultimate tensile strengths (ASTM D6637) listed in the QPL shall be used as the basis for quality assurance testing and acceptance of the product as shipped to the project site per the *Standard Specifications for Construction*.

The HITEC report provided connection data for the DOT^3 system and the HP System. Both systems provide partial connection coverage, with the DOT^3 system only providing 14 teeth per 21 openings, and the HP System providing 17 teeth per 21 openings. The DOT^3 system shall not be used.

The connection test results provided in the HITEC report for this wall system utilized an earlier version (i.e., before 2003) of the Tensar product series that had lower ultimate short-term geogrid tensile strengths than are currently approved in the QPL. Since connection test data have not been provided for the combination of the stronger Tensar geogrid product series (i.e., the 2003 series), the connection strengths in the HITEC report for the older product series shall be used, which is likely conservative. Based on the connection data provided in the HITEC report for this wall system, the short-term, ultimate connection strength reduction factor, CR_u, for the Tensar geogrid, MESA block combination using the HP Connector system is as provided in Table 15-(Tensar MESA)-1 for each product approved for use with the MESA system. Table 15-(Tensar MESA)-1 also provides the approved value of T_{ac}, as defined in the AASHTO LRFD Specifications, assuming a durability reduction factor of 1.1.

Table 15-L-1 Approved Connection Strength Design Values for Tensar MESA Walls

Tensar Geogrid Product	T_{ult} (MARV) for Geogrid per ASTM D6637 in HITEC Report (lbs/ft)	T_{ult} (MARV) for Geogrid per ASTM D6637 for 2003 Product (lbs/ft)	CR_u from HITEC Report	*CR_u if 2003 Tult (MARV) Values Used	RF_{CR}	CR_{cr} if 2003 T_{ult} (MARV) Values Used	T_{ac} (lbs/ft)
UMESA3	4400	4820	0.79	0.72	2.6	0.28	1200
UMESA4	6850	7880	0.73	0.63	2.6	0.24	1720
UMESA5	9030	9870	0.80	0.73	2.6	0.28	2510
UMESA6	10,700	12200	0.75	0.66	2.6	0.25	2770

*i.e., to get same Tultconn value as in HITEC report.

T_{ac}, the long-term connection strength, shall be calculated as follows:

$$T_{ac} = \frac{T_{MARV} \bullet CR_u}{RF_{CR} \bullet RF_D} \quad \text{(15-L-1)}$$

where,

T_{MARV} the minimum average roll value for the ultimate geosynthetic strength T_{ult},
CR_u = the ultimate connection strength $T_{ultconn}$ divided by the lot specific ultimate tensile strength, T_{lot} (i.e., the lot of material specific to the connection testing),
RF_{CR} = creep reduction factor for the geosynthetic, and
RF_D = the durability reduction factor for the geosynthetic.

Since the HITEC report was developed, Tensar Earth Technologies has developed a new connector that provides, for the most part, a full coverage connector, providing 19 teeth per 21 openings. Short-term connection tests on the strongest geogrid product in the series shows that connection strengths higher than those obtained with the HP System will be obtained with the new connector, which is called the DOT system (note that the 3 has been dropped – this is not the same as the DOT[3] system). This new DOT System may be used, provided that the values for T_{ac} shown in Table 15-(Tensar MESA)-1 are used for design, which should be conservative, until a more complete set of test results are available. Photographs illustrating the new DOT connector system are provided in Figures 15-(Tensar MESA)-1 through 15-(Tensar MESA)-3.

The longitudinal (i.e., in the direction of loading) and transverse (i.e., parallel to the wall or slope face) ribs that make up the geogrid shall be perpendicular to one another. The maximum deviation of the cross-rib from being perpendicular to the longitudinal rib (skew) shall be manufactured to be no more than 1 inch in 5 feet of geogrid width. The maximum deviation of the cross-rib at any point from a line perpendicular to the longitudinal ribs located at the cross-rib (bow) shall be 0.5 inches.

The gap between the connector tabs and the bearing surface of the geogrid reinforcement cross-rib shall not exceed 0.5 inches. A maximum of 10% of connector tabs may have a gap between 0.3 inches and 0.5 inches. Gaps in the remaining connector tabs shall not exceed 0.3 inches.

Concrete for dry cast concrete blocks used in the Tensar MESA wall system shall meet the following requirements:

1. Have a minimum 28 day compressive strength of 4,000 psi.
2. Conform to ASTM C1372.
3. The lot of blocks produced for use in this project shall conform to the following freeze-thaw test requirements when tested in accordance with ASTM C 1262:
   - Minimum acceptable performance shall be defined as weight loss at the conclusion of 150 freeze-thaw cycles not exceeding one percent of the block's initial weight for a minimum of four of the five block specimens tested.
4. The concrete blocks shall have a maximum water absorption of one percent above the water absorption content of the lot of blocks produced and successfully tested for the freeze-thaw test specified in the preceding paragraph.

It is noted in ASTM C1372 that a dimensional tolerance for the height of the block of ⅛ inch is allowed, but that Elias, et al. (2001), which is referenced in Chapter 15 and by the AASHTO Standard Specifications for Highway Bridges (2002) recommends a tighter dimensional tolerance of 1/16 inch. Based on WSDOT experience, for walls greater than 25 feet in height, some cracking of facing blocks due to differential vertical stresses tends to occur in the bottom portion of the wall. Therefore, blocks placed at depths below the wall top of 25 feet or more should be cast to a vertical dimensional tolerance of 1/16 inch to reduce the risk of significant cracking of facing blocks.

Figure 15-L-1 MESA DOT System Connector and Block



Figure 15-L-2 MESA DOT System Connector and Block as Assembled



Figure 15-L-3 MESA DOT System Connector and Block as Assembled, With Block Placed on Top



Block connectors for block courses with geogrid reinforcement shall be glass fiber reinforced high-density polypropylene conforming to the following minimum material specifications:

Property	Specification	Value
Polypropylene	ASTM D 4101 Group 1 Class 1 Grade 2	73 ± 2 percent
Fiberglass Content	ASTM D 2584	25 ± 3 percent
Carbon Black	ASTM D 4218	2 percent minimum
Specific Gravity	ASTM D 792	1.08 ± 0.04
Tensile Strength at yield	ASTM D 638	8,700 ± 1,450 psi
Melt Flow Rate	ASTM D 1238	0.37 ± 0.16 ounces/10 min.

Block connectors for block courses without geogrid reinforcement shall be glass fiber reinforced high-density polyethylene (HDPE) conforming to the following minimum material specifications:

Property	Specification	Value
HDPE	ASTM D 1248 Group 3 Class 1 Grade 5	68 ± 3 percent
Fiberglass Content	ASTM D 2584	30 ± 3 percent
Carbon Black	ASTM D 4218	2 percent minimum
Specific Gravity	ASTM D 792	1.16 ± 0.06
Tensile Strength at yield	ASTM D 638	8,700 ± 725 psi
Melt Flow Rate	ASTM D 1238	0.11 ± 0.07 ounces/10 min.

Approved details for the Tensar MESA wall system with the DOT System connector are provided in the following plan sheets. Exceptions and additional requirements regarding these approved details are as follows:

- In plan sheet 5 of 13, the guard rail detail, the guard rail post shall either be installed through precut holes in the geogrid layers that must penetrated, or the geogrid layers shall be cut in a manner that prevents ripping or tearing of the geogrid.
- In plan sheets 4, 6, and 8 of 13, regarding the geotextiles and drainage composites shown, WSDOT reserves the right to require the use Standard Specifications materials as specified in Standard Specification Section 9-33 that are similar to those specified in this plan sheet.
- In plan sheet 7 of 13, regarding the geogrid at wall corner detail, cords in the wall facing alignment to form an angle point or a radius shall be no shorter than the width of the roll to insure good contact between the connectors and the geogrid cross-bar throughout the width of the geogrid. Alternatively, the geogrid roll could be cut longitudinally in half to allow a tighter radius, if necessary.
- In plan sheet 7 of 13, regarding the typical geogrid percent coverage, the maximum distance X between geogrid strips shall be one block width. Therefore, the minimum percent coverage shall be 73 percent.
- The culvert penetration and obstruction avoidance details are preapproved up to a diameter of 2 feet for culvert penetration through the face and up to 4 feet for obstruction avoidance. Larger diameter culverts or obstructions are not considered preapproved. This wall is also preapproved for use with traffic barriers.

Tensar®

CONSTRUCTION DRAWINGS
Prepared For

STATE OF WASHINGTON
DEPARTMENT OF TRANSPORTATION

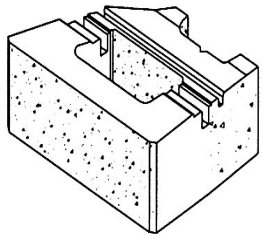

mesa™

STANDARD MESA DETAILS & CONSTRUCTION NOTES

INDEX

SHEET	DESCRIPTION
1.	Title Sheet
2.	Construction Notes
3.	Typical Details
4.	Typical Details
5.	Typical Details
6.	Typical Details
7.	Typical Details
8.	Fabric Separator Detail
9.	Typical Details
10.	32 Inch Type "F" Barrier Standard
11.	32 Inch Type "F" Barrier Standard
12.	42 Inch Type "F" Barrier Standard
13.	42 Inch Type "F" Barrier Standard

WSDOT MESA01.DWG

THIS DESIGN IS BASED UPON SPECIFIC PROPERTIES OF TENSAR PRODUCTS (GEOGRIDS, DRAINAGE COMPOSITES AND EROSION MESA), WHICH ARE PROPRIETARY TO THE TENSAR CORPORATION 1210 CITIZENS PARKWAY, MORROW GA. 30260. ANY SUBSTITUTION OF THE SPECIFIED PRODUCTS WILL INVALIDATE THIS DESIGN. THIS DRAWING IS BEING FURNISHED FOR USE ON THIS SPECIFIC PROJECT ONLY. ANY PARTY ACCEPTING THIS DOCUMENT DOES SO IN CONFIDENCE AND AGREES THAT IT SHALL NOT BE DUPLICATED WHOLE OR IN PART, NOR DISCLOSED TO OTHERS, WITHOUT THE CONSENT OF TENSAR EARTH TECHNOLOGIES, INC.

COPYRIGHT 2004, TENSAR EARTH TECHNOLOGIES, INC.

Tensar®
Tensar Earth Technologies, Inc.
5883 Glenridge Drive, Suite 200
Atlanta, Georgia 30328
(404) 250-1290

mesa™

[REVISIONS \ ISSUE]

0	3/31/04	ISSUED FOR REVIEW

Project Number: WSDOT MESA
Date Drawn: 3/31/04
Scale: As Shown
Designed by: JHL
Drawn by: JHL
Checked by: GK

STANDARD MESA DETAILS & CONSTRUCTION NOTES

TITLE SHEET

Sheet Number: 1 of 13

MESA STANDARD UNIT
NOT TO SCALE
11"
18"
8"
DOT CONNECTOR
NOT TO SCALE
16.18"
BREAKAGE SLOT
ELEVATION VIEW
1.33"
2.11"
CROSS-SECTION
90°
0.089"
0.234"
NOTE:
DOT CONNECTOR CAN BE BROKEN AT BREAKAGE SLOTS TO FACILITATE INSTALLATION.
CONCRETE LEVELING PAD DETAIL
NOT TO SCALE
6" UNREINFORCED CONCRETE (3000 PSI MIN. COMPRESSIVE STRENGTH)
MESA STANDARD UNIT
USE NON-SHRINK CONCRETE MORTAR AS NECESSARY TO MAINTAIN PROPER HORIZONTAL AND VERTICAL ALIGNMENT
6"±
24"
LEVELING PAD STEP DETAIL
NOT TO SCALE
MESA STANDARD UNIT
18"
9"
45°
6"
LEVELING PAD
GEOGRID ORIENTATION
NOT TO SCALE
PLACE A DOT CONNECTOR THROUGH GEOGRID APERTURES OF ALL MESA UNITS WHERE A GEOGRID LAYER IS ATTACHED
LONG AXIS OF STRUCTURAL GEOGRID APERTURE (PERPENDICULAR TO WALL FACE)
SHIM BETWEEN BLOCK COURSES, AS NECESSARY, TO MAINTAIN PROPER VERTICAL AND HORIZONTAL ALIGNMENT. GEOGRID RIBS AND ASPHALT ROOFING SHINGLES ARE ACCEPTABLE SHIMMING MATERIALS. THE SHIM SHALL COVER THE LENGTH OF THE BLOCK.
MESA STANDARD UNIT (TYP.)
MESA STANDARD UNIT AND GEOGRID CONNECTION DETAIL
NOT TO SCALE
PLACE TWO MESA STANDARD CONNECTORS AT EVERY MESA STANDARD UNIT WHERE A GEOGRID LAYER IS ATTACHED. ORIENTED FOR NEAR VERTICAL ALIGNMENT
MESA STANDARD UNIT
TRIM FINGERS IN FRONT OF TRANSVERSE BAR
DOT CONNECTOR - DRIVE CONNECTOR FINGERS THROUGH THE GEOGRID APERTURES BEHIND THE FIRST TRANSVERSE BAR
TENSAR STRUCTURAL GEOGRID
PLACE TRANSVERSE BAR AGAINST DOT CONNECTOR
SHIM BETWEEN BLOCK COURSES AS NECESSARY TO MAINTAIN PROPER VERTICAL AND HORIZONTAL ALIGNMENT. SEE GEOGRID ORIENTATION DETAIL FOR SHIMMING DETAILS.
WSDOT MESAOLDWG
THIS DESIGN IS BASED UPON SPECIFIC PROPERTIES OF TENSAR PRODUCTS (GEOGRIDS, DRAINAGE COMPOSITES AND DRODON MESA), WHICH ARE PROPRIETARY TO THE TENSAR CORPORATION ©2010 NEXUS PARK, GEORGIA. THE MESA, AS SHOWN, IS PATENTED OR THE SUBJECT OF PATENT APPLICATIONS. THIS DESIGN IS FURNISHED FOR USE ONLY IN CONJUNCTION WITH TENSAR PRODUCTS IN A MESA PROJECT ONLY. ANY PARTY ACCEPTING THIS DOCUMENT AGREES TO BE BOUND BY THE TERMS AND CONDITIONS SET FORTH IN THE AGREEMENT BETWEEN TENSAR AND THE PARTY TO WHOM THIS DOCUMENT IS SUPPLIED. THIS DOCUMENT IS TO BE USED IN CONFIDENCE AND AGREES THAT IT SHALL NOT BE REPRODUCED WHOLE OR IN PART, NOR DISCLOSED TO OTHERS, WITHOUT THE CONSENT OF TENSAR EARTH TECHNOLOGIES, INC.
COPYRIGHT 2004, TENSAR EARTH TECHNOLOGIES, INC.
Tensar.
Tensar Earth Technologies, Inc.
5883 Glenridge Drive, Suite 200
Atlanta, Georgia 30328
(404) 250-1290
MESA
REVISIONS \ ISSUE
0 3/31/04 ISSUED FOR REVIEW
Project Number WSDOT MESA
Date Drawn 3/31/04
Scale As Shown
Designed by JHL
Drawn by JHL
Checked by CJK
STANDARD MESA DETAILS & CONSTRUCTION NOTES
TYPICAL DETAILS
Sheet Number 3 of 13

MESA STANDARD UNIT
#3 REBAR 8" O.C.
90° CORNER UNIT
LEVEL B
LEVEL A
PLAN VIEW
MESA STANDARD UNIT
REBAR
MESA CORNER UNIT
ELEVATION VIEW
NOTES:
1. ALTERNATE CORNER UNIT DIRECTION FOR PROPER RUNNING BOND.
2. GROUT CAVITY OF CORNER BLOCK. REFER TO GROUT DETAIL
SPLIT CONCRETE FACE
MESA CORNER UNIT
MESA CORNER UNIT AND REBAR
NOT TO SCALE
HORIZONTAL #3 REBAR IN ALL COURSES OF GROUTED MESA UNITS
VERTICAL #3 REBAR (8" MIN.)
GROUT EACH COURSE OF MESA BLOCK (REFER TO ELEVATION VIEW FOR LIMITS OF GROUTING)
INSTALL AASHTO M288 CLASS 1 GEOTEXTILE BETWEEN BLOCKS AT LOWER LEVEL OF GROUT SECTION
4.0" (MIN.)
GROUT DETAIL
NOT TO SCALE
DRAINAGE COMPOSITE (30% COVERAGE) (250-MIL CORE NET WITH AN AASHTO M288 CLASS 2 GEOTEXTILE BONDED TO EACH SIDE)
4 OZ. NEEDLEPUNCHED NONWOVEN GEOTEXTILE FABRIC WRAP
4" PERFORATED DRAIN PIPE
3/4" MINUS FREE DRAINING STONE
4" SOLID OUTLET PIPE SLOPED AT 2% (75' O.C.)
FOLD AND SECURE GEOTEXTILE TO COVER COMPOSITE END
2% MIN.
2.0'
2/3H
NOTE:
SEE CONSTRUCTION NOTES FOR TYPE OF PIPE.
SUBDRAIN DETAIL
NOT TO SCALE
WSDOT MESA4.DWG
REVISIONS \ ISSUE
0 3/31/04 ISSUED FOR REVIEW
Project Number WSDOT MESA
Date Drawn 3/31/04
Scale As Shown
Designed By JHL
Drawn By JHL
Checked By GK
STANDARD MESA DETAILS & CONSTRUCTION NOTES
TYPICAL DETAILS
Sheet Number 4 of 13
Tensar
Tensar Earth Technologies, Inc.
5883 Glenridge Drive, Suite 200
Atlanta, Georgia 30328
(404) 250-1290
THIS DESIGN IS BASED UPON SPECIFIC PROPERTIES OF TENSAR PRODUCTS RECITED. DRAWING CONTENTS AND CROSSOVER MESH, WHICH ARE PROPRIETARY TO THE TENSAR CORPORATION ITEM ENTERED IN THIS DOCUMENT ON MAY 30, 2003. IT IS FURNISHED FOR USE ON THIS SPECIFIC PROJECT ONLY. ANY PARTY ACCEPTING THIS DOCUMENT AGREES SO IN CONFIDENCE AND AGREES THAT IT SHALL NOT BE REPRODUCED WHOLLY OR IN PART, NOR DISCLOSED TO OTHERS, WITHOUT THE CONSENT OF TENSAR EARTH TECHNOLOGIES, INC.
COPYRIGHT 2004, TENSAR EARTH TECHNOLOGIES, INC.

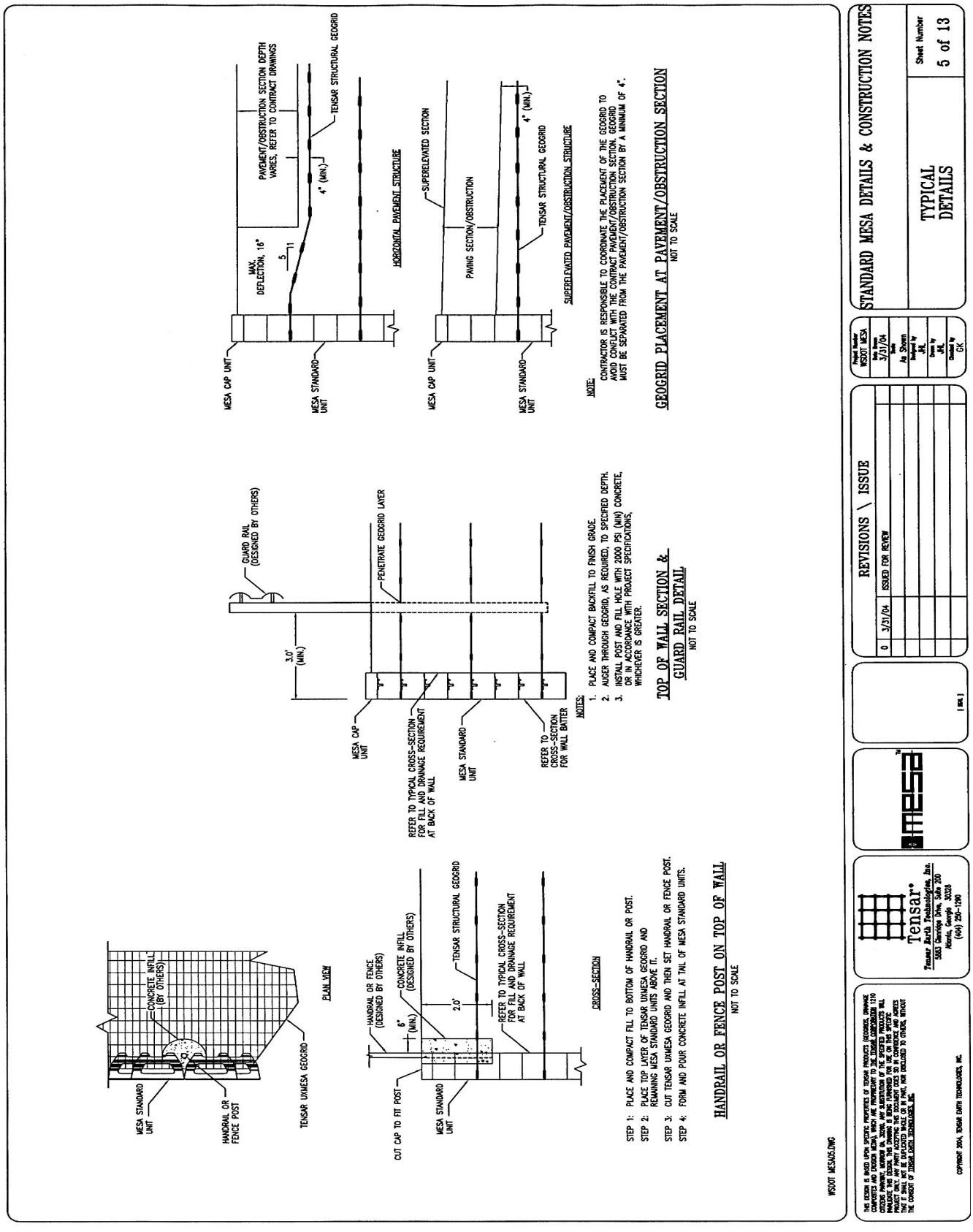
STANDARD MESA DETAILS & CONSTRUCTION NOTES
TYPICAL DETAILS
Sheet Number
5 of 13
REVISIONS \ ISSUE
0 3/31/04 ISSUED FOR REVIEW
Project Number WSDOT MESA
Date Drawn 3/31/04
Scale As Shown
Designed by JHL
Drawn by JHL
Checked by GK
Tensar
Tensar Earth Technologies, Inc.
5883 Glenridge Drive, Suite 200
Atlanta, Georgia 30328
(404) 250-1290
MESA CAP UNIT
MESA STANDARD UNIT
MAX. DEFLECTION, 16"
5
1
PAVEMENT/OBSTRUCTION SECTION DEPTH VARIES, REFER TO CONTRACT DRAWINGS
TENSAR STRUCTURAL GEOGRID
4" (MIN.)
HORIZONTAL PAVEMENT STRUCTURE
SUPERELEVATED SECTION
PAVING SECTION/OBSTRUCTION
SUPERELEVATED PAVEMENT/OBSTRUCTION STRUCTURE
NOTE:
CONTRACTOR IS RESPONSIBLE TO COORDINATE THE PLACEMENT OF THE GEOGRID TO AVOID CONFLICT WITH THE CONTRACT PAVEMENT/OBSTRUCTION SECTION. GEOGRID MUST BE SEPARATED FROM THE PAVEMENT/OBSTRUCTION SECTION BY A MINIMUM OF 4".
GEOGRID PLACEMENT AT PAVEMENT/OBSTRUCTION SECTION
NOT TO SCALE
GUARD RAIL (DESIGNED BY OTHERS)
PENETRATE GEOGRID LAYER
3.0' (MIN.)
MESA CAP UNIT
REFER TO TYPICAL CROSS-SECTION FOR FILL AND DRAINAGE REQUIREMENT AT BACK OF WALL
MESA STANDARD UNIT
REFER TO CROSS-SECTION FOR WALL BATTER
NOTES:
1. PLACE AND COMPACT BACKFILL TO FINISH GRADE.
2. AUGER THROUGH GEOGRID, AS REQUIRED, TO SPECIFIED DEPTH.
3. INSTALL POST AND FILL HOLE WITH 2000 PSI (MIN) CONCRETE, OR IN ACCORDANCE WITH PROJECT SPECIFICATIONS, WHICHEVER IS GREATER.
TOP OF WALL SECTION & GUARD RAIL DETAIL
NOT TO SCALE
CONCRETE INFILL (BY OTHERS)
MESA STANDARD UNIT
HANDRAIL OR FENCE POST
TENSAR UXMESA GEOGRID
PLAN VIEW
HANDRAIL OR FENCE (DESIGNED BY OTHERS)
CONCRETE INFILL (DESIGNED BY OTHERS)
6" (MIN.)
2.0'
TENSAR STRUCTURAL GEOGRID
REFER TO TYPICAL CROSS-SECTION FOR FILL AND DRAINAGE REQUIREMENT AT BACK OF WALL
CUT CAP TO FIT POST
MESA STANDARD UNIT
CROSS-SECTION
STEP 1: PLACE AND COMPACT FILL TO BOTTOM OF HANDRAIL OR POST.
STEP 2: PLACE TOP LAYER OF TENSAR UXMESA GEOGRID AND REMAINING MESA STANDARD UNITS ABOVE IT.
STEP 3: CUT TENSAR UXMESA GEOGRID AND THEN SET HANDRAIL OR FENCE POST.
STEP 4: FORM AND POUR CONCRETE INFILL AT TAIL OF MESA STANDARD UNITS.
HANDRAIL OR FENCE POST ON TOP OF WALL
NOT TO SCALE
WSDOT MESA05.DWG

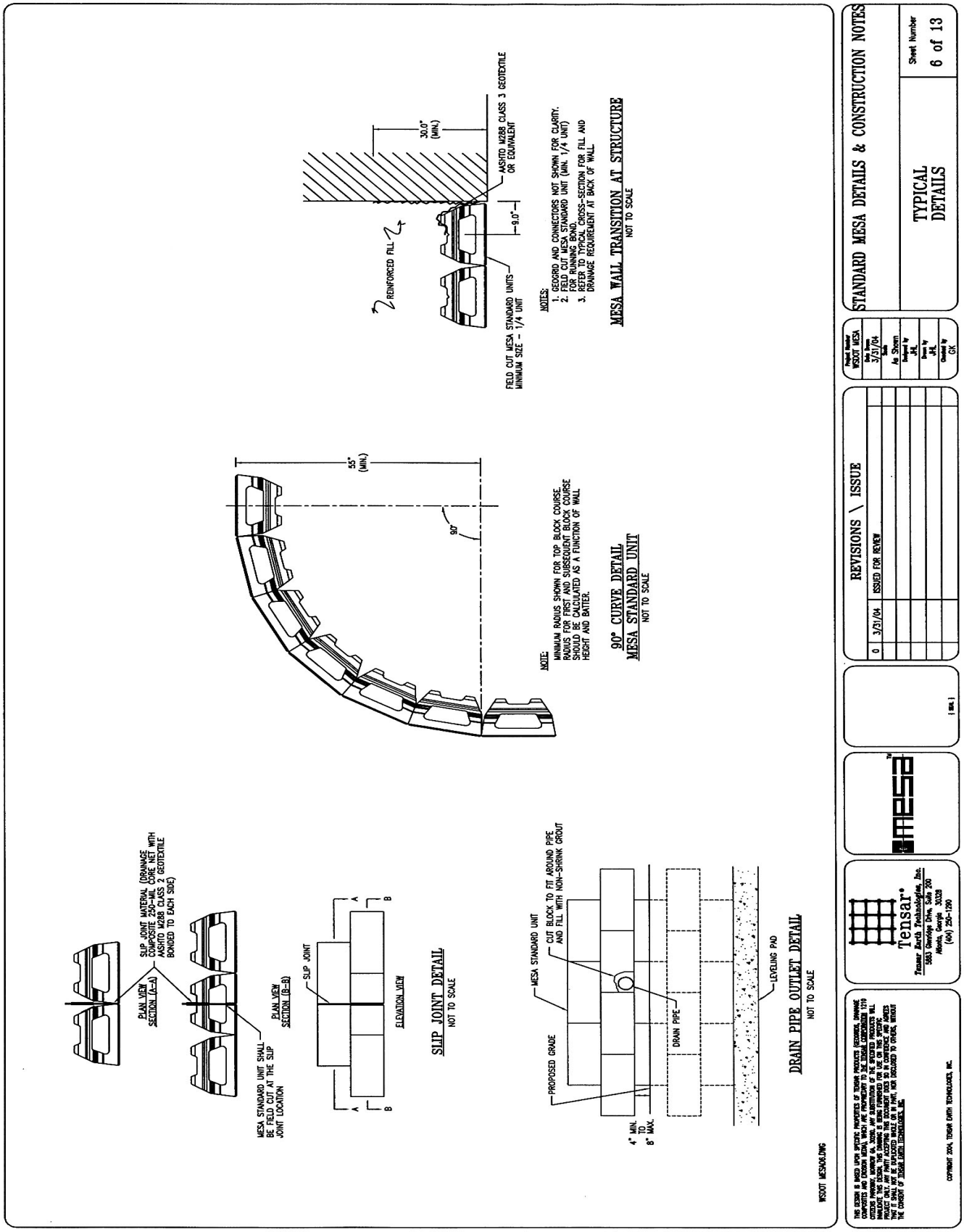
STANDARD MESA DETAILS & CONSTRUCTION NOTES
TYPICAL DETAILS
Sheet Number
6 of 13
REVISIONS \ ISSUE
0 3/31/04 ISSUED FOR REVIEW
Project Number WSDOT MESA
Date Drawn 3/31/04
Scale As Shown
Designed by JHL
Drawn by JHL
Checked by GK
Tensar
Tensar Earth Technologies, Inc.
5883 Glenridge Drive, Suite 200
Atlanta, Georgia 30328
(404) 250-1290
MESA
PLAN VIEW SECTION (A-A)
SLIP JOINT MATERIAL (DRAINAGE COMPOSITE 250-MIL CORE NET WITH AASHTO M288 CLASS 2 GEOTEXTILE BONDED TO EACH SIDE)
MESA STANDARD UNIT SHALL BE FIELD CUT AT THE SLIP JOINT LOCATION
PLAN VIEW SECTION (B-B)
SLIP JOINT
ELEVATION VIEW
SLIP JOINT DETAIL
NOT TO SCALE
MESA STANDARD UNIT
CUT BLOCK TO FIT AROUND PIPE AND FILL WITH NON-SHRINK GROUT
PROPOSED GRADE
DRAIN PIPE
LEVELING PAD
4" MIN. TO 8" MAX.
DRAIN PIPE OUTLET DETAIL
NOT TO SCALE
55" (MIN.)
90°
NOTE:
MINIMUM RADIUS SHOWN FOR TOP BLOCK COURSE. RADIUS FOR FIRST AND SUBSEQUENT BLOCK COURSE SHOULD BE CALCULATED AS A FUNCTION OF WALL HEIGHT AND BATTER.
90° CURVE DETAIL
MESA STANDARD UNIT
NOT TO SCALE
RENFORCED FILL
30.0" (MIN.)
AASHTO M288 CLASS 3 GEOTEXTILE OR EQUIVALENT
9.0"
FIELD CUT MESA STANDARD UNITS MINIMUM SIZE - 1/4 UNIT
NOTES:
1. GEOGRID AND CONNECTORS NOT SHOWN FOR CLARITY.
2. FIELD CUT MESA STANDARD UNIT (MIN. 1/4 UNIT) FOR RUNNING BOND.
3. REFER TO TYPICAL CROSS-SECTION FOR FILL AND DRAINAGE REQUIREMENT AT BACK OF WALL.
MESA WALL TRANSITION AT STRUCTURE
NOT TO SCALE
WSDOT MESA06.DWG

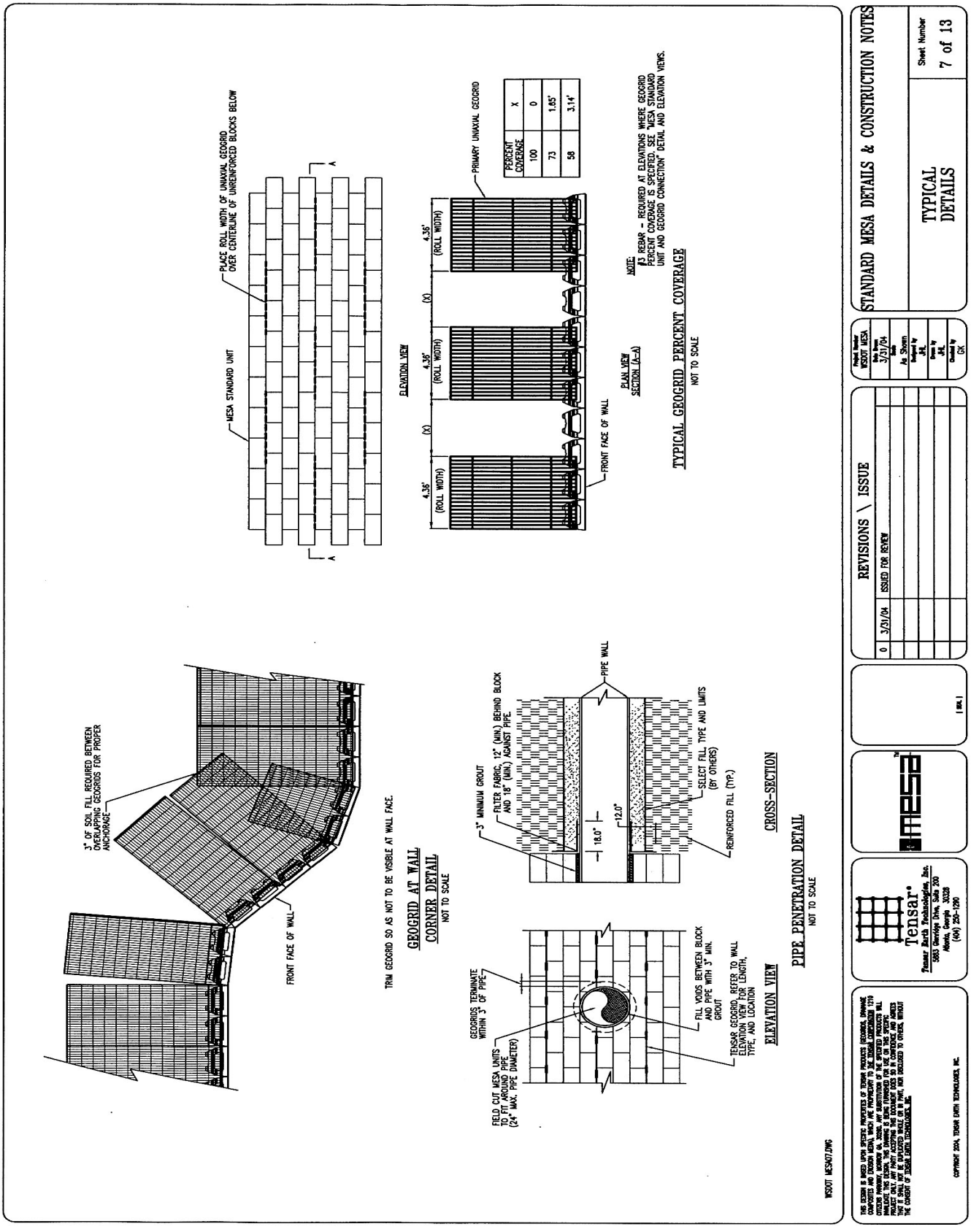
STANDARD MESA DETAILS & CONSTRUCTION NOTES
TYPICAL DETAILS
Sheet Number
7 of 13
REVISIONS \ ISSUE
0 3/31/04 ISSUED FOR REVIEW
Project Number WSDOT MESA
Date Drawn 3/31/04
Scale As Shown
Designed by JHL
Drawn by JHL
Checked by GK
Tensar
Tensar Earth Technologies, Inc.
5883 Glenridge Drive, Suite 200
Atlanta, Georgia 30328
(404) 250-1290
MESA
3" OF SOIL FILL REQUIRED BETWEEN OVERLAPPING GEOGRIDS FOR PROPER ANCHORAGE
FRONT FACE OF WALL
TRIM GEOGRID SO AS NOT TO BE VISIBLE AT WALL FACE.
GEOGRID AT WALL
CORNER DETAIL
NOT TO SCALE
3" MINIMUM GROUT
FILTER FABRIC, 12" (MIN.) BEHIND BLOCK AND 18" (MIN.) AGAINST PIPE.
PIPE WALL
18.0"
12.0"
SELECT FILL, TYPE AND LIMITS (BY OTHERS)
REINFORCED FILL (TYP.)
CROSS-SECTION
GEOGRIDS TERMINATE WITHIN 3" OF PIPE
FIELD CUT MESA UNITS TO FIT AROUND PIPE (24" MAX. PIPE DIAMETER)
FILL VOIDS BETWEEN BLOCK AND PIPE WITH 3" MIN. GROUT
TENSAR GEOGRID, REFER TO WALL ELEVATION VIEW FOR LENGTH, TYPE, AND LOCATION
ELEVATION VIEW
PIPE PENETRATION DETAIL
NOT TO SCALE
WSDOT MESA07.DWG
PLACE ROLL WIDTH OF UNIAXIAL GEOGRID OVER CENTERLINE OF UNREINFORCED BLOCKS BELOW
MESA STANDARD UNIT
A
ELEVATION VIEW
4.36' (ROLL WIDTH)
(X)
PRIMARY UNIAXIAL GEOGRID
FRONT FACE OF WALL
PLAN VIEW
SECTION (A-A)
NOTE:
#3 REBAR - REQUIRED AT ELEVATIONS WHERE GEOGRID PERCENT COVERAGE IS SPECIFIED. SEE "MESA STANDARD UNIT AND GEOGRID CONNECTION" DETAIL AND ELEVATION VIEWS.
TYPICAL GEOGRID PERCENT COVERAGE
NOT TO SCALE
PERCENT COVERAGE | X
100 | 0
73 | 1.65'
58 | 3.14'
COPYRIGHT 2004, TENSAR EARTH TECHNOLOGIES, INC.

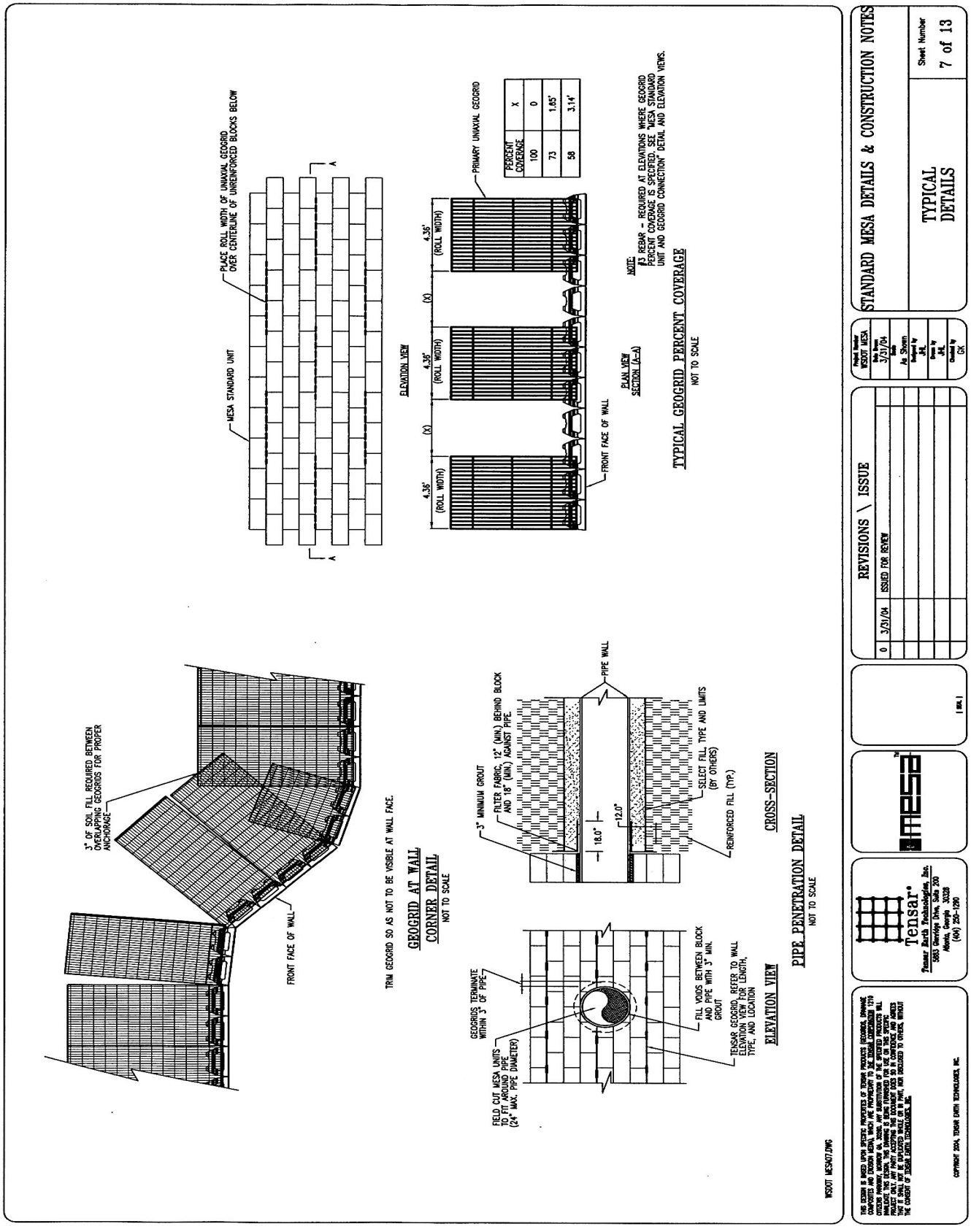
PLACE ROLL WIDTH OF UNIAXIAL GEOGRID OVER CENTERLINE OF UNREINFORCED BLOCKS BELOW
MESA STANDARD UNIT
A
A
ELEVATION VIEW
4.35' (ROLL WIDTH)
(X)
4.35' (ROLL WIDTH)
(X)
4.35' (ROLL WIDTH)
PRIMARY UNIAXIAL GEOGRID
FRONT FACE OF WALL
PLAN VIEW
SECTION (A-A)
PERCENT COVERAGE
X
100
0
73
1.65'
58
3.14'
NOTE:
#3 REBAR - REQUIRED AT ELEVATIONS WHERE GEOGRID PERCENT COVERAGE IS SPECIFIED. SEE "MESA STANDARD UNIT AND GEOGRID CONNECTION" DETAIL AND ELEVATION VIEWS.
TYPICAL GEOGRID PERCENT COVERAGE
NOT TO SCALE
3" OF SOIL FILL REQUIRED BETWEEN OVERLAPPING GEOGRIDS FOR PROPER ANCHORAGE
FRONT FACE OF WALL
TRIM GEOGRID SO AS NOT TO BE VISIBLE AT WALL FACE.
GEOGRID AT WALL
CORNER DETAIL
NOT TO SCALE
3" MINIMUM GROUT
FILTER FABRIC, 12" (MIN.) BEHIND BLOCK AND 18" (MIN.) AGAINST PIPE.
PIPE WALL
18.0"
12.0"
SELECT FILL TYPE AND LIMITS (BY OTHERS)
REINFORCED FILL (TYP.)
CROSS-SECTION
GEOGRIDS TERMINATE WITHIN 3" OF PIPE
FIELD CUT MESA UNITS TO FIT AROUND PIPE (24" MAX. PIPE DIAMETER)
FILL VOIDS BETWEEN BLOCK AND PIPE WITH 3" MIN. GROUT
TENSAR GEOGRID, REFER TO WALL ELEVATION VIEW FOR LENGTH, TYPE, AND LOCATION
ELEVATION VIEW
PIPE PENETRATION DETAIL
NOT TO SCALE
WSDOT MESA07.DWG
REVISIONS \ ISSUE
0 3/31/04 ISSUED FOR REVIEW
Project Number WSDOT MESA
Date Issue 3/31/04
Scale As Shown
Designed by JHL
Drawn by JHL
Checked by GK
STANDARD MESA DETAILS & CONSTRUCTION NOTES
TYPICAL DETAILS
Sheet Number 7 of 13
Tensar
Tensar Earth Technologies, Inc.
5883 Glenridge Drive, Suite 200
Atlanta, Georgia 30328
(404) 250-1290
THIS DESIGN IS BASED UPON SPECIFIC PROPERTIES OF TENSAR PRODUCTS (GEOGRIDS, DRAINAGE COMPOSITES AND ACCESSORIES) AS SUPPLIED BY TENSAR EARTH TECHNOLOGIES, INC. ANY SUBSTITUTION OF TENSAR PRODUCTS WITH PRODUCTS FROM OTHER SUPPLIERS MAY INVALIDATE THIS DESIGN. THIS DRAWING IS BEING FURNISHED FOR USE ON THIS SPECIFIC PROJECT ONLY. ANY PARTY ACCEPTING THIS DRAWING AGREES TO IN CONFIDENCE AND AGREES THAT IT SHALL NOT BE USED, REPRODUCED OR DISCLOSED TO OTHERS, WITHOUT THE CONSENT OF TENSAR EARTH TECHNOLOGIES, INC.
COPYRIGHT 2004, TENSAR EARTH TECHNOLOGIES, INC.

FABRIC DRAINAGE SPECIFICATION

Geotextile may be used in lieu of aggregate for the drainage medium behind the Mesa facing units if the select fill used in the reinforced zone, as a minimum, complies with the AASHTO Guidelines for Mechanically Stabilized Earth Retaining Walls. Section 5.8, Mechanically Stabilized Earth (MSE) Wall Design of the 2002 AASHTO guidelines defines the soil's physical properties.

An eight (8) oz per square yard nonwoven needle punched geotextile, AASHTO M288 CLASS 1, shall be used as the filter medium.

Unless otherwise approved by Tensar, the geotextile shall be delivered to the project site in rolls that have been factory cut to the specified widths for the installation.

INSTALLATION PROCEDURE

1. Install each course of the Mesa facing units between the top of the last geogrid placed and the bottom of the next layer of geogrid above as shown on the approved construction drawings. The facing units shall be aligned and leveled in accordance with the wall installation guide.
2. Prior to placing the select backfill, the geotextile shall be placed behind the units such that a minimum of six (6) inches of material is turned into the fill at the top and the bottom. The geotextile shall then be adjusted to present a relatively smooth surface.
3. The select backfill shall then be placed and compacted in accordance with the approved construction drawings and project specifications.
4. After the select backfill has been compacted and properly graded for the installation of the next layer of geogrid reinforcement, the geotextile on the top units can remain in position on the facing unit (see Stage 4 detail) or be pulled back onto the backfill (contractor's option).
5. Install the geogrid reinforcement and repeat the process commencing with Item 1.
6. After the last level of primary geogrid reinforcement has been placed, install the remaining courses of Mesa facing units except for the last standard course and the cap units, in accordance with the details on the approved construction drawings.
7. Place a line of an approved construction adhesive along the top of the Mesa Standard units approximately one (1) inch behind the face as shown in Detail S1.
8. Place the eight (8) oz. geotextile such that the leading edge of the material is approximately 1/2 inch behind the face and press into the adhesive. The bottom of the geotextile shall extend a minimum of six (6) inches into the select fill. Allow adhesive to obtain an initial set for approximately 20 minutes (Detail S1).
9. Install the Mesa connectors in the slots as shown in the wall installation guide. Connectors will push the fabric into the slot as shown in the Typical Section, this sheet.
10. Install the last course of Mesa Standard units and align and level as required in the installation guide.
11. Place a line of adhesive in the depressed area between the connector slot and the face of the unit per Detail S2.
12. Install the eight (8) oz. geotextile such that the leading edge of the material just contacts the step at the edge of the depressed area as shown in the Typical Section, this sheet. The bottom of the geotextile shall extend a minimum of six (6) inches beyond the geotextile in the Mesa Standard unit.
13. Place a line of adhesive along the top of the Standard units just behind the face per Detail S3.
14. Install the cap units as shown in Detail S4.

Geotextile widths required for the detail:

AASHTO M288 Class 1: 36 inch

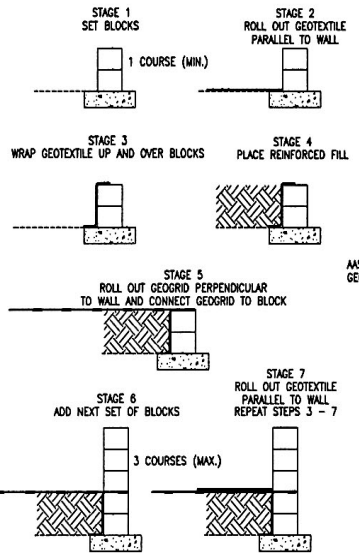

STAGES OF GEOTEXTILE LAYOUT
MESA WALL
GEOTEXTILE SEPARATOR
NOT TO SCALE

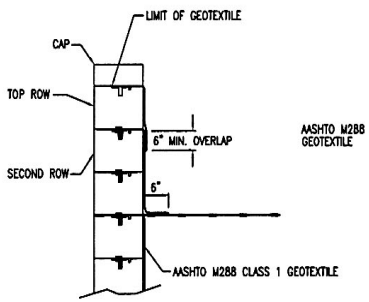

TYPICAL SECTION
NOT TO SCALE

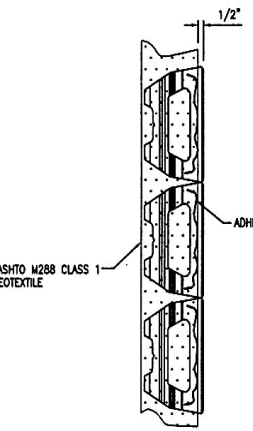

GEOTEXTILE ON
SECOND ROW MESA UNIT
DETAIL S1

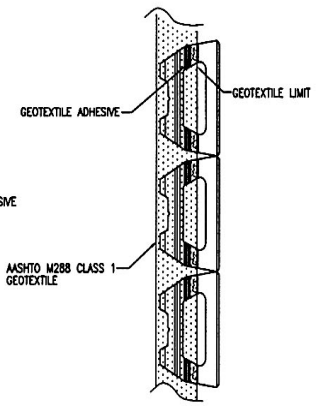

GEOTEXTILE ON
TOP MESA UNIT
DETAIL S2

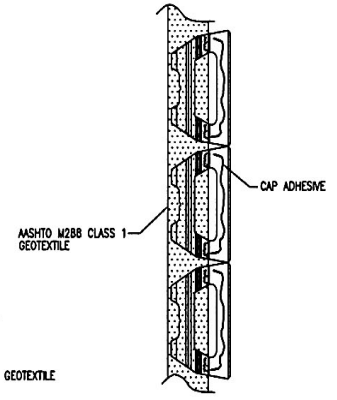

CAP ADHESIVE
DETAIL S3

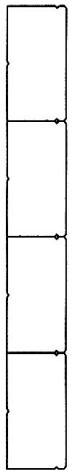

MESA CAP
DETAIL S4

WSDOT MESA08.DWG

THIS DESIGN IS BASED UPON SPECIFIC PROPERTIES OF TENSAR PRODUCTS (GEOGRIDS, DRAINAGE COMPOSITES AND EROSION MESH), WHICH ARE PROPRIETARY TO THE TENSAR CORPORATION 1210 CITIZENS PARKWAY, MORROW GA. 30260. ANY SUBSTITUTION OF THE SPECIFIED PRODUCTS WILL INVALIDATE THIS DESIGN. THIS DRAWING IS BEING FURNISHED FOR USE ON THIS SPECIFIC PROJECT ONLY. ANY PARTY ACCEPTING THIS DOCUMENT DOES SO IN CONFIDENCE AND AGREES THAT IT SHALL NOT BE DUPLICATED WHOLE OR IN PART, NOR DISCLOSED TO OTHERS, WITHOUT THE CONSENT OF TENSAR EARTH TECHNOLOGIES, INC.

COPYRIGHT 2004, TENSAR EARTH TECHNOLOGIES, INC.

Tensar®
Tensar Earth Technologies, Inc.
5883 Glenridge Drive, Suite 200
Atlanta, Georgia 30328
(404) 250-1290

MESA™

[BSK]

REVISIONS \ ISSUE		
0	3/31/04	ISSUED FOR REVIEW

Project Number	WSDOT MESA
Date Drawn	3/31/04
Scale	As Shown
Designed by	JHL
Drawn by	JHL
Checked by	GK

STANDARD MESA DETAILS & CONSTRUCTION NOTES

FABRIC SEPARATOR
DETAIL

Sheet Number
8 of 13

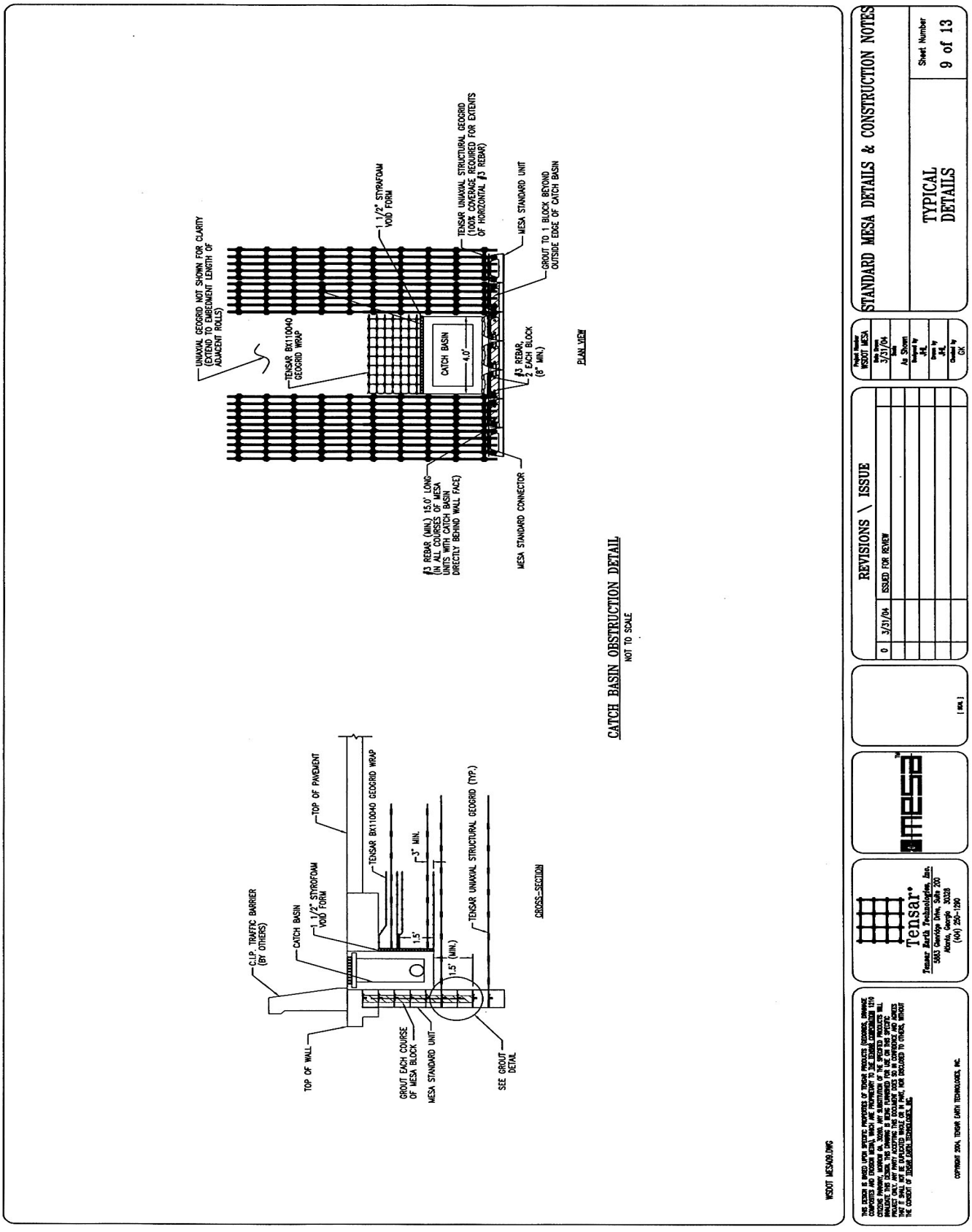
UNIAXIAL GEOGRID NOT SHOWN FOR CLARITY (EXTEND TO EMBEDMENT LENGTH OF ADJACENT ROLLS)
TENSAR BX110040 GEOGRID WRAP
1 1/2" STYROFOAM VOID FORM
TENSAR UNIAXIAL STRUCTURAL GEOGRID (100% COVERAGE REQUIRED FOR EXTENTS OF HORIZONTAL #3 REBAR)
MESA STANDARD UNIT
GROUT TO 1 BLOCK BEYOND OUTSIDE EDGE OF CATCH BASIN
CATCH BASIN
4.0'
#3 REBAR, 2 EACH BLOCK (8" MIN.)
#3 REBAR (MIN.) 15.0' LONG (IN ALL COURSES OF MESA UNITS WITH CATCH BASIN DIRECTLY BEHIND WALL FACE)
MESA STANDARD CONNECTOR
PLAN VIEW
CATCH BASIN OBSTRUCTION DETAIL
NOT TO SCALE
C.I.P. TRAFFIC BARRIER (BY OTHERS)
CATCH BASIN
1 1/2" STYROFOAM VOID FORM
TOP OF PAVEMENT
TENSAR BX110040 GEOGRID WRAP
3" MIN.
1.5'
1.5' (MIN.)
TENSAR UNIAXIAL STRUCTURAL GEOGRID (TYP.)
TOP OF WALL
GROUT EACH COURSE OF MESA BLOCK
MESA STANDARD UNIT
SEE GROUT DETAIL
CROSS-SECTION
WSDOT MESA09.DWG
STANDARD MESA DETAILS & CONSTRUCTION NOTES
TYPICAL DETAILS
Sheet Number
9 of 13
REVISIONS \ ISSUE
0 3/31/04 ISSUED FOR REVIEW
Tensar
Tensar Earth Technologies, Inc.
5883 Glenridge Drive, Suite 200
Atlanta, Georgia 30328
(404) 250-1290
COPYRIGHT 2004, TENSAR EARTH TECHNOLOGIES, INC.

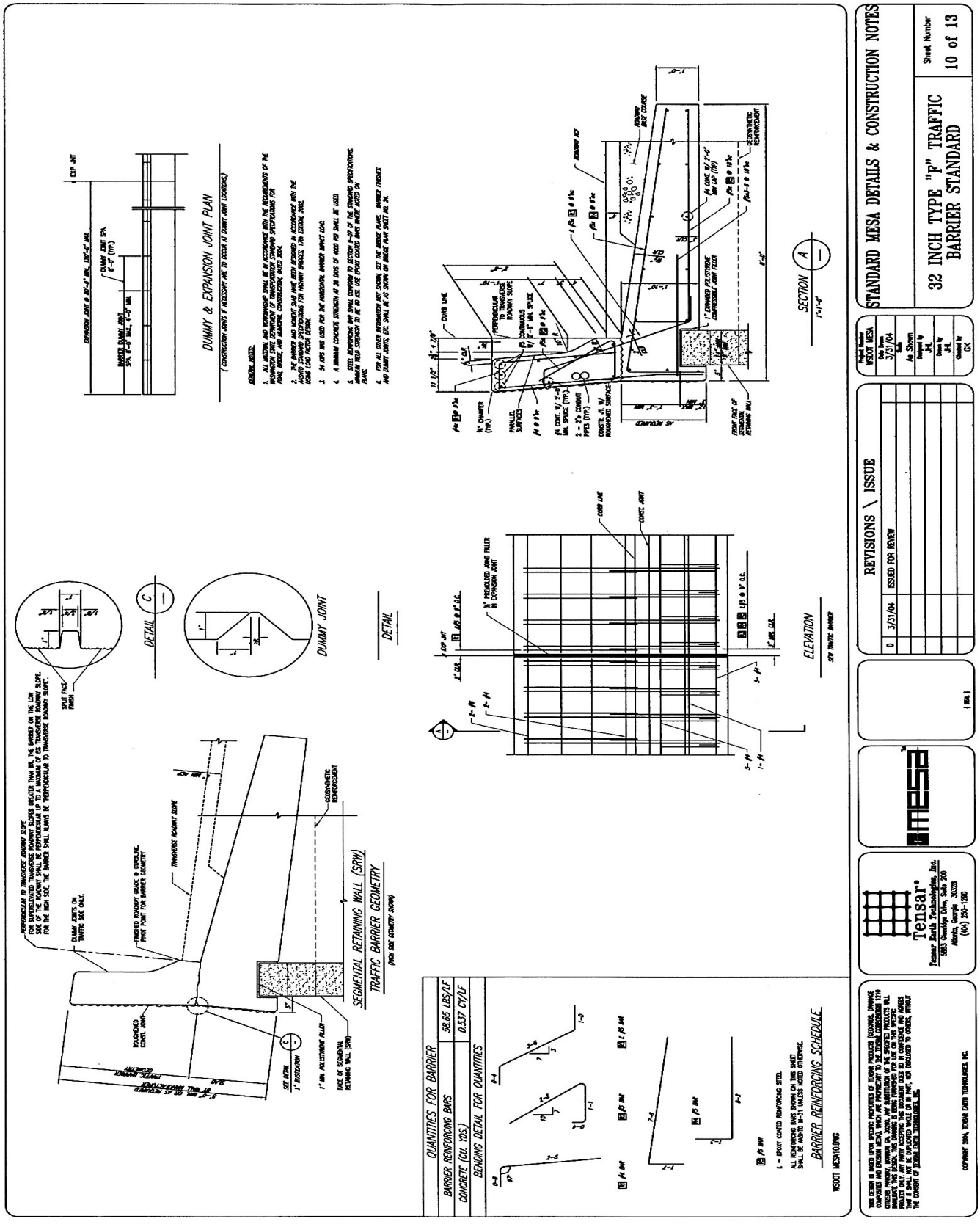
STANDARD MESA DETAILS & CONSTRUCTION NOTES
32 INCH TYPE "F" TRAFFIC BARRIER STANDARD
Sheet Number 10 of 13
REVISIONS \ ISSUE
0 3/31/04 ISSUED FOR REVIEW
WSDOT MESA
Date 3/31/04
Scale As Shown
Designed by JHL
Drawn by JHL
Checked by CK
Tensar
Tensar Earth Technologies, Inc.
5883 Glenridge Drive, Suite 200
Atlanta, Georgia 30328
(404) 250-1290
MESA
DUMMY & EXPANSION JOINT PLAN
(CONSTRUCTION JOINTS IF NECESSARY ARE TO OCCUR AT DUMMY JOINT LOCATIONS)
GENERAL NOTES:
1. ALL MATERIAL AND WORKMANSHIP SHALL BE IN ACCORDANCE WITH THE REQUIREMENTS OF THE WASHINGTON STATE DEPARTMENT OF TRANSPORTATION STANDARD SPECIFICATIONS FOR ROAD, BRIDGE, AND MUNICIPAL CONSTRUCTION, DATED 2004.
2. THE BARRIER AND MOMENT SLAB MAKE REBAR DESIGNED IN ACCORDANCE WITH THE AASHTO STANDARD SPECIFICATIONS FOR HIGHWAY BRIDGES, 17th EDITION, 2002, LOAD FACTOR DESIGN.
3. 3/4 APS MIX USED FOR THE HORIZONTAL BARRIER IMPACT LOAD.
4. A MINIMUM CONCRETE STRENGTH AT 28 DAYS OF 4000 PSI SHALL BE USED.
5. STEEL REINFORCING BAR SHALL CONFORM TO SECTION 9-07 OF THE STANDARD SPECIFICATIONS. MINIMUM YIELD STRENGTH FOR BAR SIZE #5 OR LESS SHALL BE 60,000 PSI.
6. FOR ALL OTHER INFORMATION NOT SHOWN, SEE THE BRIDGE PLANS, BARRIER FASCIA AND DUMMY JOINTS, ETC. SHALL BE AS SHOWN ON BRIDGE PLAN SHEET NO. 24.
DETAIL C
DUMMY JOINT
DETAIL
SEGMENTAL RETAINING WALL (SRW)
TRAFFIC BARRIER GEOMETRY
(FACE SIDE GEOMETRY SHOWN)
SECTION A
ELEVATION
QUANTITIES FOR BARRIER
BARRIER REINFORCING BARS 58.65 LBS/LF
CONCRETE (CU. YDS.) 0.537 CY/LF
BENDING DETAIL FOR QUANTITIES
BARRIER REINFORCING SCHEDULE
WSDOT MESA10.DWG
E = EPOXY COATED REINFORCING STEEL
ALL REINFORCING BARS SHOWN ON THIS SHEET SHALL BE AASHTO M-31 UNLESS NOTED OTHERWISE.
THIS DESIGN IS BASED UPON SPECIFIC PROPERTIES OF TENSAR PRODUCTS DESCRIBED, COMPARE COMPONENTS AND EROSION MEDIA, WHICH ARE PROPRIETARY TO THE TENSAR CORPORATION 1210 CRESCENT PARKWAY, NORCROSS GA, 30093. ANY SUBSTITUTION OF THE SPECIFIED PRODUCTS WILL INVALIDATE THIS DESIGN. THE LICENSING OF THIS DESIGN TO USE ON THIS PROJECT IS NON-EXCLUSIVE AND NON-TRANSFERABLE. THE LICENSING IS FOR THE PROJECT AS DESCRIBED HEREIN ONLY. THIS DESIGN MAY NOT BE EMPLOYED WHOLE OR IN PART, NOR DISCLOSED TO OTHERS WITHOUT THE CONSENT OF TENSAR EARTH TECHNOLOGIES, INC.
COPYRIGHT 2004, TENSAR EARTH TECHNOLOGIES, INC.

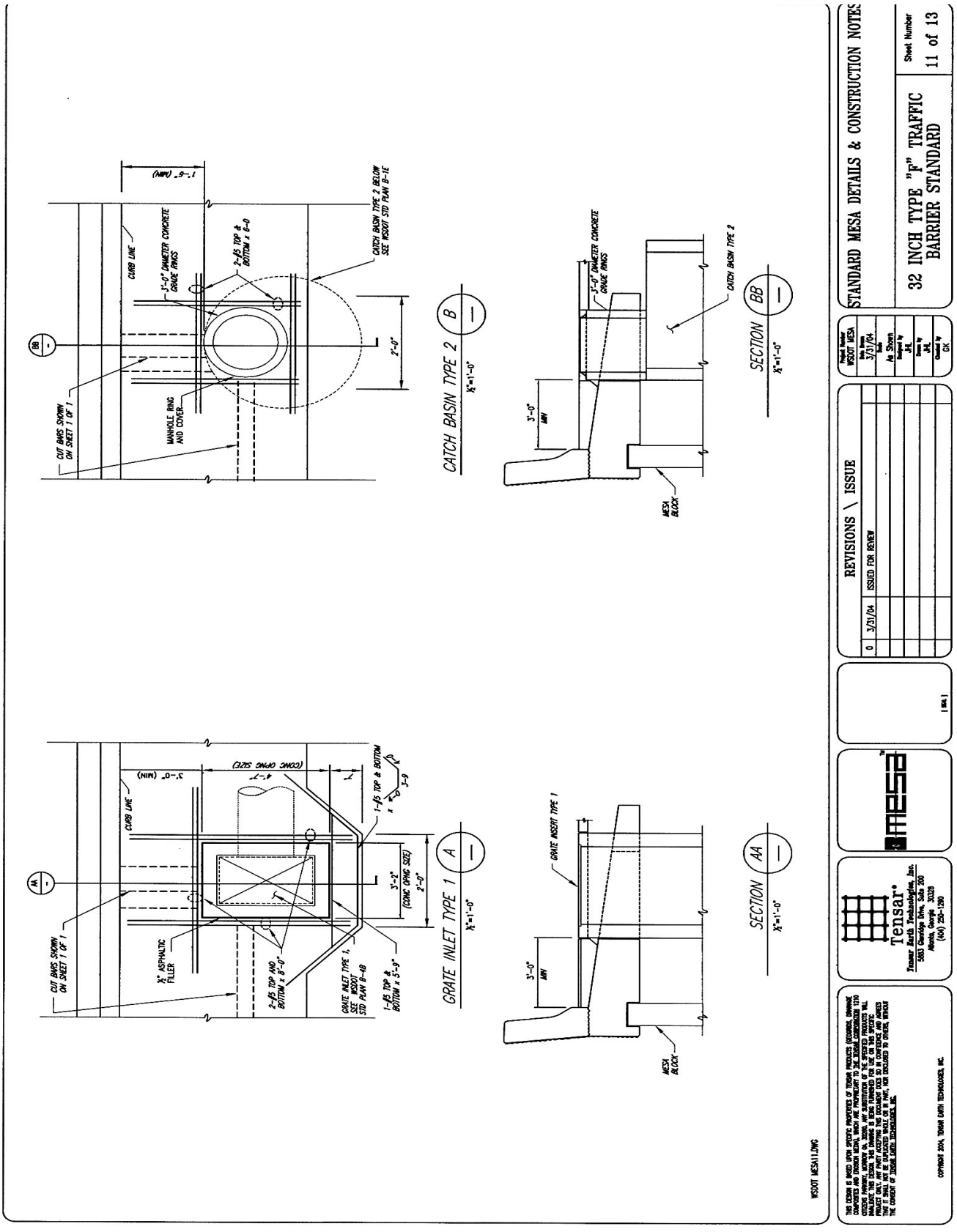
STANDARD MESA DETAILS & CONSTRUCTION NOTES
32 INCH TYPE "F" TRAFFIC BARRIER STANDARD
Sheet Number
11 of 13
REVISIONS \ ISSUE
0 3/31/04 ISSUED FOR REVIEW
Project Number WSDOT MESA
Date Drawn 3/31/04
Scale As Shown
Designed by JHL
Drawn by JHL
Checked by GK
Tensar
Tensar Earth Technologies, Inc.
5883 Glenridge Drive, Suite 200
Atlanta, Georgia 30328
(404) 250-1290
CATCH BASIN TYPE 2 B
SECTION BB
GRATE INLET TYPE 1 A
SECTION AA
CURB LINE
CUT BARS SHOWN ON SHEET 1 OF 1
MANHOLE RING AND COVER
3'-0" DIAMETER CONCRETE GRADE RINGS
CATCH BASIN TYPE 2 BELOW SEE WSDOT STD PLAN B-1E
MESA BLOCK
GRATE INSERT TYPE 1
GRATE INLET TYPE 1, SEE WSDOT STD PLAN B-4B
1-#5 TOP & BOTTOM x 5'-9"
2-#5 TOP AND BOTTOM x 8'-0"
½" ASPHALTIC FILLER
WSDOT MESA11.DWG

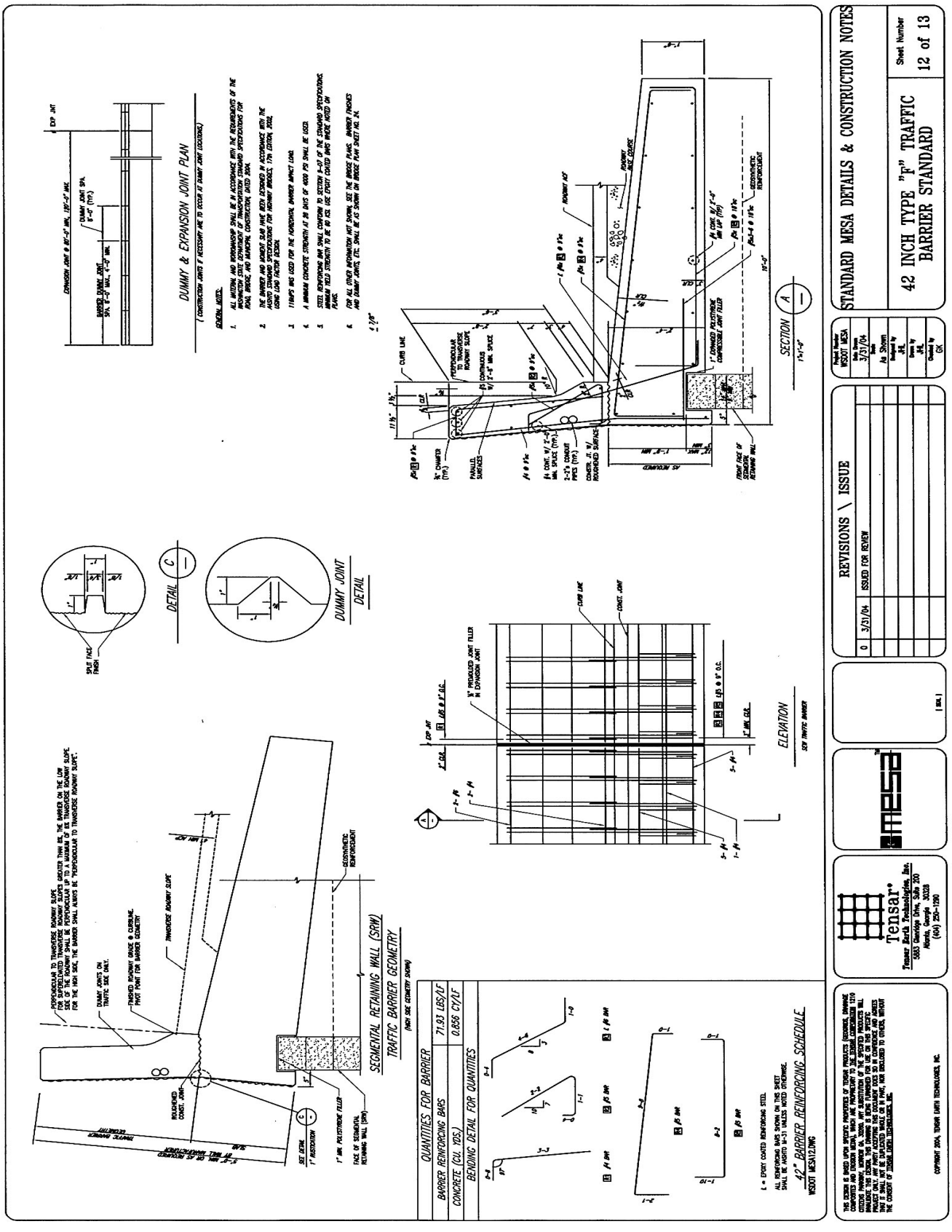
DUMMY & EXPANSION JOINT PLAN
(CONSTRUCTION JOINTS IF NECESSARY ARE TO OCCUR AT DUMMY JOINT LOCATIONS)
GENERAL NOTES:
1. ALL MATERIAL AND WORKMANSHIP SHALL BE IN ACCORDANCE WITH THE REQUIREMENTS OF THE WASHINGTON STATE DEPARTMENT OF TRANSPORTATION STANDARD SPECIFICATIONS FOR ROAD, BRIDGE, AND MUNICIPAL CONSTRUCTION, DATED 2004.
2. THE BARRIER AND MOMENT SLAB HAVE BEEN DESIGNED IN ACCORDANCE WITH THE AASHTO STANDARD SPECIFICATIONS FOR HIGHWAY BRIDGES, 17th EDITION, 2002, USING LOAD FACTOR DESIGN.
3. 119MPH WAS USED FOR THE HORIZONTAL BARRIER IMPACT LOAD.
4. A MINIMUM CONCRETE STRENGTH AT 28 DAYS OF 4000 PSI SHALL BE USED.
5. STEEL REINFORCING BAR SHALL CONFORM TO SECTION 9-07 OF THE STANDARD SPECIFICATIONS WITH A YIELD STRENGTH TO BE 60 KSI. USE EPOXY COATED BARS WHERE NOTED ON PLANS.
6. FOR ALL OTHER INFORMATION NOT SHOWN, SEE THE BRIDGE PLANS. BARRIER THICKNESS AND DUMMY JOINTS, ETC. SHALL BE AS SHOWN ON BRIDGE PLANS SHEET NO. X.
DUMMY JOINT SPA. 6'-0" (TYP.)
BARRIER DUMMY JOINT SPA. 6'-0" MAX., 4'-0" MIN.
EXP. JNT
CONSTR. JOINT @ 60'-0" MIN., 120'-0" MAX.
SPLIT FACE FINISH
DETAIL C
DUMMY JOINT DETAIL
SEGMENTAL RETAINING WALL (SRW)
TRAFFIC BARRIER GEOMETRY
(HIGH SIDE GEOMETRY SHOWN)
PERPENDICULAR TO TRANSVERSE ROADWAY SLOPE.
FOR SUPERELEVATED TRANSVERSE ROADWAY SLOPES GREATER THAN 6%, THE BARRIER ON THE LOW SIDE OF THE ROADWAY SHALL BE PERPENDICULAR UP TO A MAXIMUM OF 6% TRANSVERSE ROADWAY SLOPE. FOR THE HIGH SIDE, THE BARRIER SHALL ALWAYS BE "PERPENDICULAR TO TRANSVERSE ROADWAY SLOPE".
DUMMY JOINTS ON TRAFFIC SIDE ONLY.
FINISHED ROADWAY GRADE @ CURB LINE. PIVOT POINT FOR BARRIER GEOMETRY
TRANSVERSE ROADWAY SLOPE
GEOSYNTHETIC REINFORCEMENT
ROUGHENED CONST. JOINT
1" MIN. POLYSTYRENE FILLER
FACE OF SEGMENTAL RETAINING WALL (SRW)
SEE DETAIL 1" RESTRICTION
QUANTITIES FOR BARRIER
BARRIER REINFORCING BARS 71.93 LBS/LF
CONCRETE (CU. YDS.) 0.856 CY/LF
BENDING DETAIL FOR QUANTITIES
E = EPOXY COATED REINFORCING STEEL
ALL REINFORCING BARS SHOWN ON THIS SHEET SHALL BE AASHTO M31, GRADE 60 UNLESS OTHERWISE NOTED.
42" BARRIER REINFORCING SCHEDULE
WSDOT MESA12.DWG
ELEVATION
SEE TRAFFIC BARRIER
CURB LINE
CONST. JOINT
1" PROFILED JOINT FILLER IN EXPANSION JOINT
EXP. JNT
SECTION A
ROADWAY SURFACE
ROADWAY AGG
ROADWAY BASE COURSE
1" CONNED POLYSTYRENE COMPRESSIBLE JOINT FILLER
GEOSYNTHETIC REINFORCEMENT
CURB LINE
PERPENDICULAR TO TRANSVERSE ROADWAY SLOPE
CONTINUOUS W/ 2'-0" MIN. SPLICE
PARALLEL SURFACES
¾" CHAMFER (TYP.)
CONSTR. JT. W/ ROUGHENED SURFACE
2-2" CONDUIT PIPES (TYP.)
¼ CONT. W/ 2'-0" MIN. SPLICE (TYP.)
FRONT FACE OF SEGMENTAL RETAINING WALL
REVISIONS \ ISSUE
0 3/31/04 ISSUED FOR REVIEW
Project Number WSDOT MESA
Date Drawn 3/31/04
Scale As Shown
Designed by JHL
Drawn by JHL
Checked by CK
STANDARD MESA DETAILS & CONSTRUCTION NOTES
42 INCH TYPE "F" TRAFFIC BARRIER STANDARD
Sheet Number 12 of 13
Tensar
Tensar Earth Technologies, Inc.
5883 Glenridge Drive, Suite 200
Atlanta, Georgia 30328
(404) 250-1290
THE DESIGN IS BASED UPON SPECIFIC PROPERTIES OF TENSAR PRODUCTS (GEOGRIDS, DRAINAGE COMPOSITES AND EROSION MATS), WHICH ARE PROPRIETARY TO THE TENSAR CORPORATION 1210 CITYGATE PARKWAY, NORCROSS GA. 30093. ANY SUBSTITUTION OF THE SPECIFIED PRODUCTS WILL INVALIDATE THE DESIGN. THE CONTRACTOR IS RESPONSIBLE FOR THE CONSTRUCTION OF THE PROJECT IN ACCORDANCE WITH THE CONTRACT DOCUMENTS. THE ENGINEER OF RECORD IS RESPONSIBLE FOR THE DESIGN OF THE PROJECT. ANY PARTY ACCEPTING THIS DRAWING AGREES THAT IT SHALL NOT BE DUPLICATED WHOLE OR IN PART, NOR DISCLOSED TO OTHERS, WITHOUT THE CONSENT OF TENSAR EARTH TECHNOLOGIES, INC.
COPYRIGHT 2004, TENSAR EARTH TECHNOLOGIES, INC.

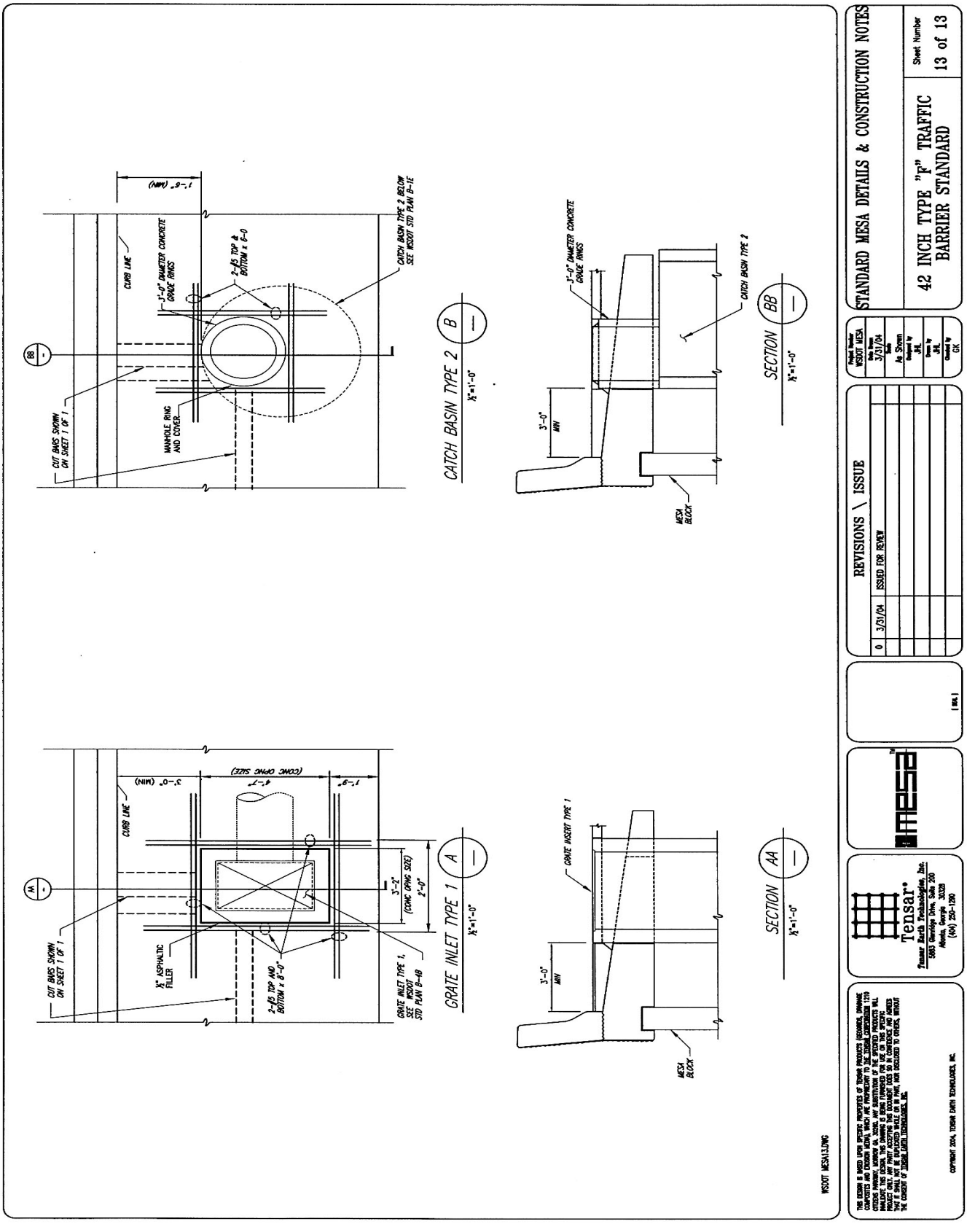
STANDARD MESA DETAILS & CONSTRUCTION NOTES
42 INCH TYPE "F" TRAFFIC BARRIER STANDARD
Sheet Number
13 of 13
REVISIONS \ ISSUE
0 3/31/04 ISSUED FOR REVIEW
CATCH BASIN TYPE 2
SECTION BB
GRATE INLET TYPE 1
SECTION AA
CURB LINE
CUT BARS SHOWN ON SHEET 1 OF 1
MANHOLE RING AND COVER
3'-0" DIAMETER CONCRETE GRADE RINGS
CATCH BASIN TYPE 2 BELOW SEE WSDOT STD PLAN B-1E
GRATE INSERT TYPE 1
MESA BLOCK
Tensar
WSDOT MESA13.DWG

Appendix 15-M Preapproved Wall Appendix: Specific Requirements and Details for Tensar Welded Wire Form Walls

In addition to the general design requirements provided in Appendix 15-A, the following specific design requirements shall be met:

No HITEC evaluation report is currently available for this wall system. Design procedures for specific elements of the wall system have been provided to WSDOT in a submittal dated May 20, 2005, and final Wall Details submitted May 26, 2005. The design procedures used by Tensar Earth Technologies (TET) are in full conformance with the AASHTO LRFD Bridge Design Specifications (2004).

This wall system consists of Tensar geogrid reinforcement that is connected to a welded wire facing panel. Regarding the welded wire facing panel, the minimum wire size acceptable for permanent walls is W4.5, and the welded wire shall be galvanized in accordance with the AASHTO LRFD specifications. The actual wire size submitted is W4.0. The exception regarding the wire size is allowed. Due to the smaller wire size, there is some risk that the welded wire form will not provide the full 75 year life required for the wall. Therefore, to insure internal stability of the wall, the geogrid reinforcement shall be wrapped fully behind the face to add the redundancy needed to insure the wall face system is stable for the required design life. The galvanization requirement for the welded wire form still applies, however, as failure of the welded wire form at some point during the wall design life could allow some local sagging of the wall face to occur. The minimum clear opening dimension of the facing panel, or backing mat if present, shall not exceed the minimum particle size of the wall facing backfill. The maximum particle size for the wall facing backfill shall be 4 inches. The maximum vertical spacing of soil reinforcement shall be 18 inches for vertical and battered wall facings.

The geogrid tensile strengths used for design for this wall system shall be aslisted in the WSDOT Qualified Products List (QPL).

The Bodkin connection shown in the typical cross-section (page 15-(Tensar WW)-1) may be used subject to the following conditions:

- No more than one Bodkin connection may be used within any given layer, andon no more than 50% of the layers in a given section ofwall.
- If the Bodkin connection is located outside of the active zone for the wall as defined in the AASHTO LRFD Bridge Design Specifications plus 3 feet and is located at least 4 feet from the face, no reduction in design tensile strength due to the presence of the Bodkin connection is required.
- If the Bodkin connection is located closer to the wall face than as described immediately above, the design tensile strength of the reinforcement shall be reduced to account for the Bodkin connection. Table 15-(Tensar WW)-1 provides a summary of the reduction factors to be applied to account for the presence of the Bodkin connection.

Table 15-M-1 Approved Bodkin Connection Strength Reduction Factors for Tensar Welded Wire Form Walls

Tensar Primary SoilReinforcement Geogrid Product	Tensar Product to Which Soil Reinforcement is Connected	Connection Strength Reduction Factor, CR_u
UMESA3/UX1400HS	UMESA6/UX1700HS	1.0
UMESA4/UX1500HS	UMESA6/UX1700HS	1.0
UMESA5/UX1600HS	UMESA6/UX1700HS	1.0
UMESA6/UX1700HS	UMESA6/UX1700HS	0.91
UMESA3/UX1400HS	UMESA3/UX1400HS	0.85
UMESA4/UX1500HS	UMESA4/UX1500HS	0.79
UMESA5/UX1600HS	UMESA5/UX1600HS	0.87
UMESA6/UX1700HS	UMESA6/UX1700HS	0.91

Approved details for the Tensar Welded Wire Form Wall system are provided in the following plan sheets. Exceptions and additional requirements regarding these approved details are as follows:

- Though not shown in the approved plan sheets, if guard rail is to be placed at the top of the wall, the guard rail post shall either be installed through precut holes in the geogrid layers that must penetrated, or the geogrid layers shall be cut in a manner that prevents ripping or tearing of the geogrid.
- In plan sheets on pages 3, 4, 5, and 13, regarding the geotextiles shown,WSDOT reserves the right to require the use *Standard Specification* materials as specified in *Standard Specification* Section 9-33 that are similar to those specified in this plansheet.
- Regarding the plantable face alternate plan details on page 6, this alternativeshall only be considered approved if specifically called out in the contract specifications.
- Regarding the welded wire form and support strut details on page 7,galvanization is required per the contract specifications for all permanent walls.
- Regarding the geogrid penetration plan sheet detail on page 15, alternative 1 from Article 11.10.10.4 of AASHTO LRFD Bridge Design Specifications shall be followed to account for the portion of the geogrid layer cut through by the penetration. For penetration diameters larger than 30 inches or closer than 3 feet
- from the wall face, Alternative 2 in AASHTO LRFD Article 11.10.10.4 shall apply to accommodate the load transfer and to provide a stable wall face.
- The culvert penetration and obstruction avoidance details are preapproved up to a diameter of 4 feet for culvert penetration through the face and up to 2.5 feet for obstruction avoidance. Larger diameter culverts or obstructions are not considered preapproved. This wall is also preapproved for use with traffic barriers.
- This wall system is preapproved for both a welded wire/gravel fill face for vertical to near vertical facing batter, and welded wire vegetated face, provided aminimum horizontal step of 6 inches between each facing lift is used, effectively battering the wall face at 3V:1H or flatter. The horizontal step is necessary to reduce vertical stress on the relatively compressible topsoil placed immediately behind the facing so that settlement of the facing does notoccur.

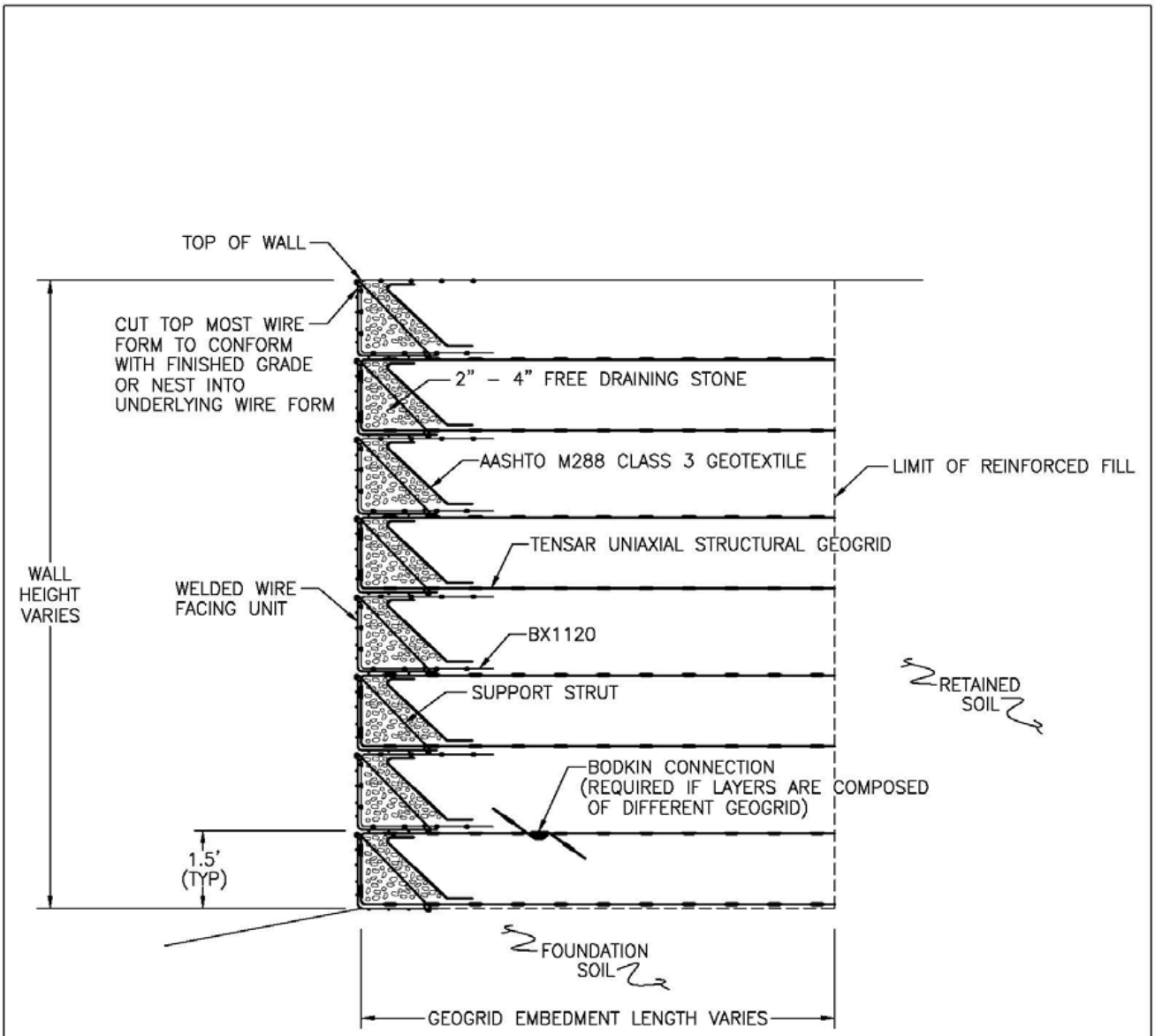

Tensar Earth Technologies Inc.

TYPICAL CROSS–SECTION

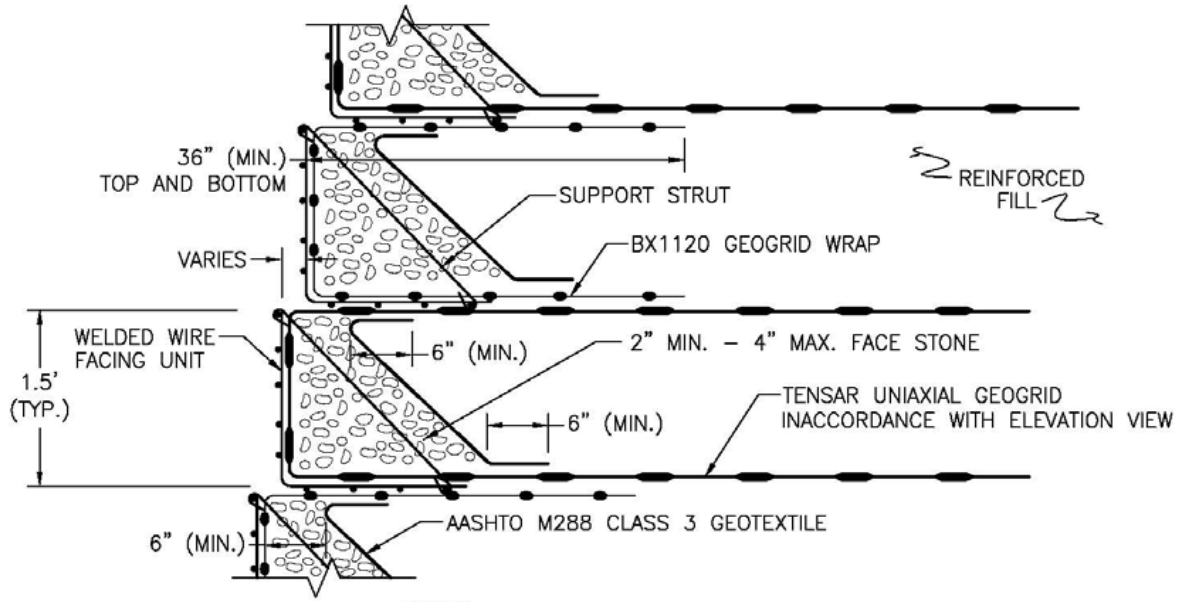

NOTES:

1. SEE WELDED WIRE FACING UNIT DETAIL FOR MATERIAL AND DIMENSIONS.
2. ALL FACING UNITS SHALL BE GALVANIZED AS PER ASTM A123 AFTER FABRICATION.
3. OPTIONAL THIN LAYER OF FINER STONE MAY BE PLACED AT THE TOP OF EACH UNIT TO PROVIDE A LEVEL SURFACE FOR THE UNIT ABOVE.

ALTERNATE WELDED WIRE FACING DETAIL

NOT TO SCALE

DESCRIPTION	ALTERNATE WELDED WIRE FACING DETAIL
FILE NAME:	WFD1e20305.DWG

Tensar Earth Technologies Inc.

Tensar•

TYPICAL DETAIL

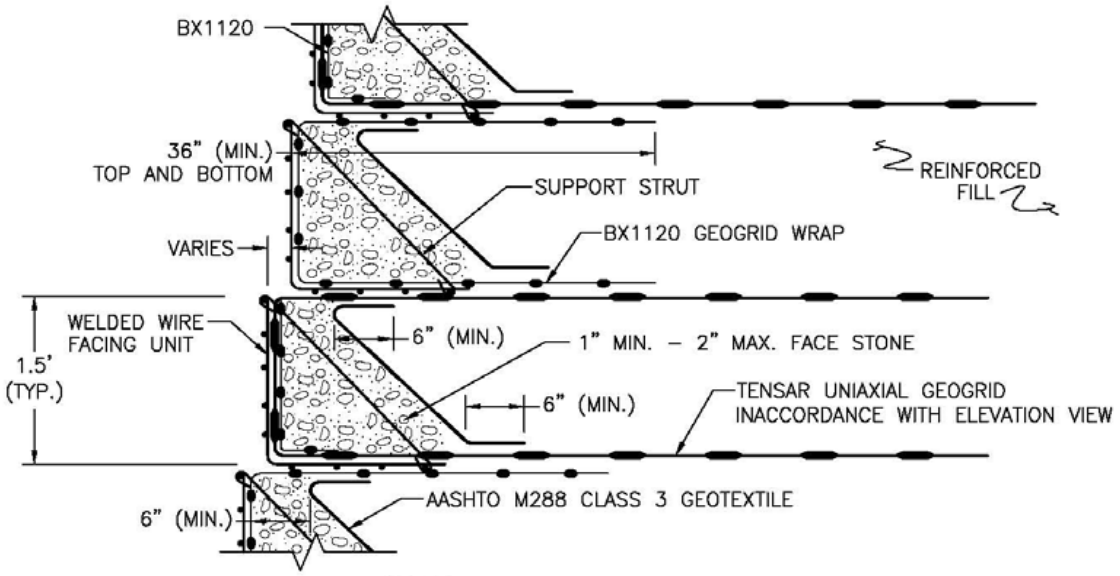

NOTES:

1. SEE WELDED WIRE FACING UNIT DETAIL FOR MATERIAL AND DIMENSIONS.
2. ALL FACING UNITS SHALL BE GALVANIZED AS PER ASTM A123 AFTER FABRICATION.

ALTERNATE WELDED WIRE FACING DETAIL (1" – 2" FACE FILL)

NOT TO SCALE

DESCRIPTION	ALTERNATE SIERRASCAPE FACING DETAIL (1"–2" FACE FILL)
FILE NAME:	WWFSS2e020305.DWG

Tensar Earth Technologies Inc.

Tensar

TYPICAL DETAIL

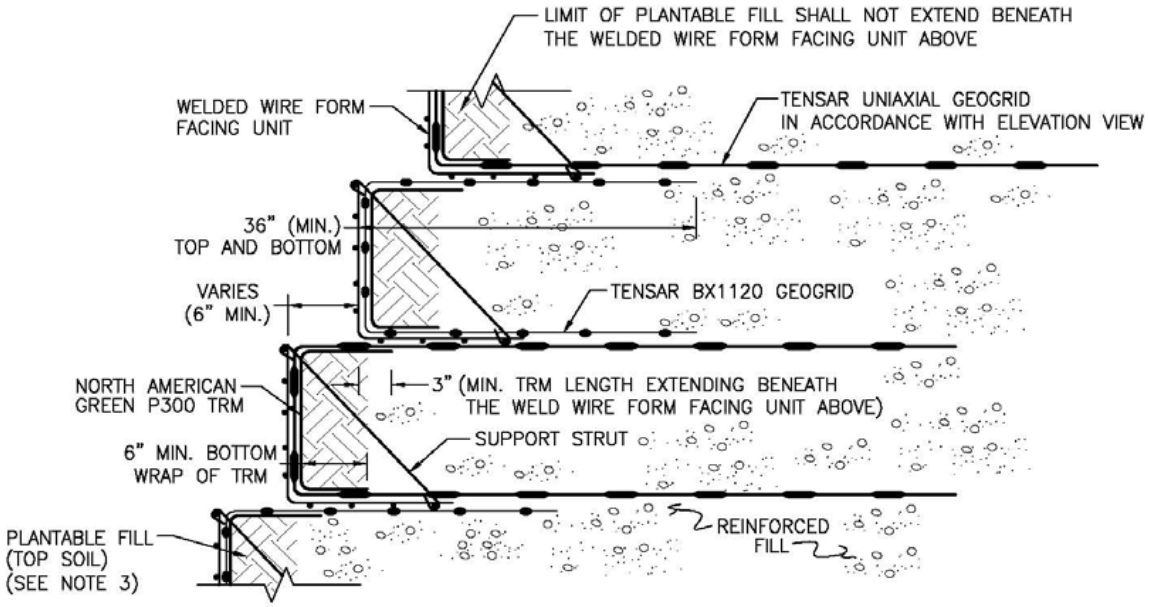

NOTES:

1. SEE WELDED WIRE FORM FACING UNIT DETAIL FOR FACING MATERIAL AND DIMENSIONS.
2. FACING UNITS SHALL BE CONSTRUCTED FROM BLACK STEEL.
3. PLANTABLE FILL OR TOP SOIL MAY BE PLACED AT THE FACE TO SUPPORT VEGETATION GROWTH.

ALTERNATE WELDED WIRE FORM FACING DETAIL (PLANTABLE FACE FILL)

NOT TO SCALE

DESCRIPTION	SIERRASCAPE FACING DETAIL
FILE NAME:	WWFSS3e20305.DWG

Tensar Earth Technologies Inc.

Tensar

TYPICAL DETAIL

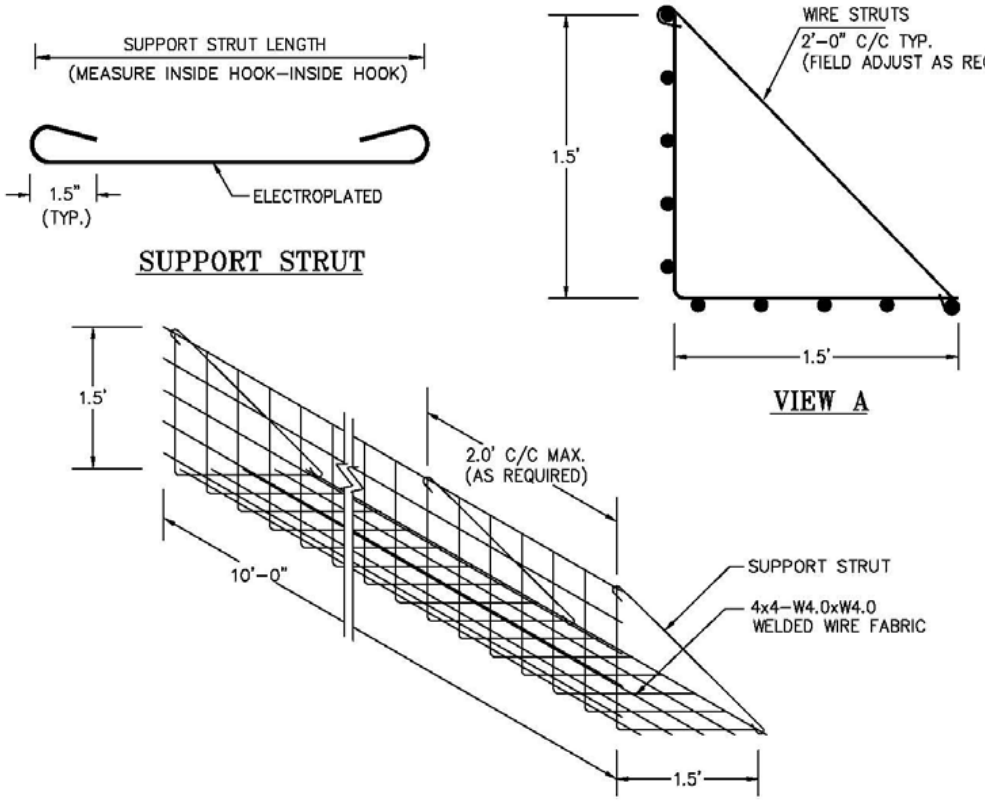

NOTES:

1. FACING TO CONSIST OF PREFABRICATED WWF 4x4–W4.0xW4.0 FORMS.
2. ALL FORMS SHALL BE GALVANIZED PER ASTM A123 AFTER BENDING WHEN REQUIRED.
3. OVERALL LENGTH OF WIRE FORMS IS 10'–0". EFFECTIVE CONSTRUCTED WIDTH IS 9'–8" WITH 4" OVER LAPPING AT ENDS.
4. STRUT LENGTH AND CROSS–SECTIONAL FORM DIMENSIONS TO BE PROVIDED IN FABRICATORS SHOP DRAWINGS.

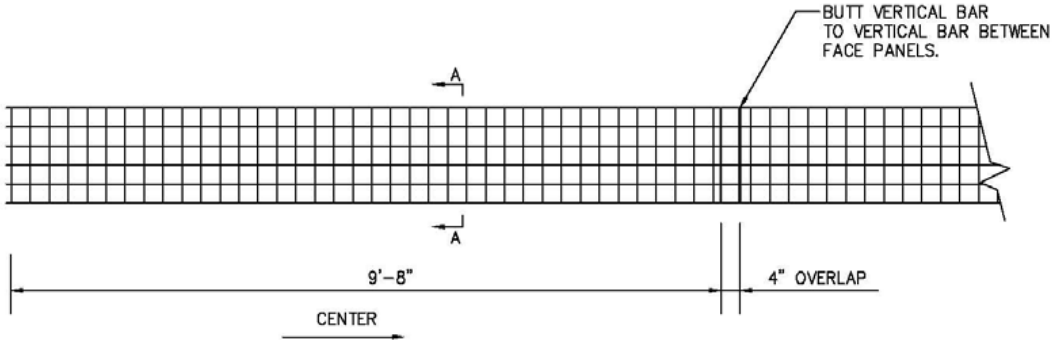

WELDED WIRE FORM DETAIL
NOT TO SCALE

DESCRIPTION	WELDED WIRE FORM DETAIL
FILE NAME:	WWF.DWG

Tensar Earth Technologies Inc.
Tensar•

TYPICAL DETAIL

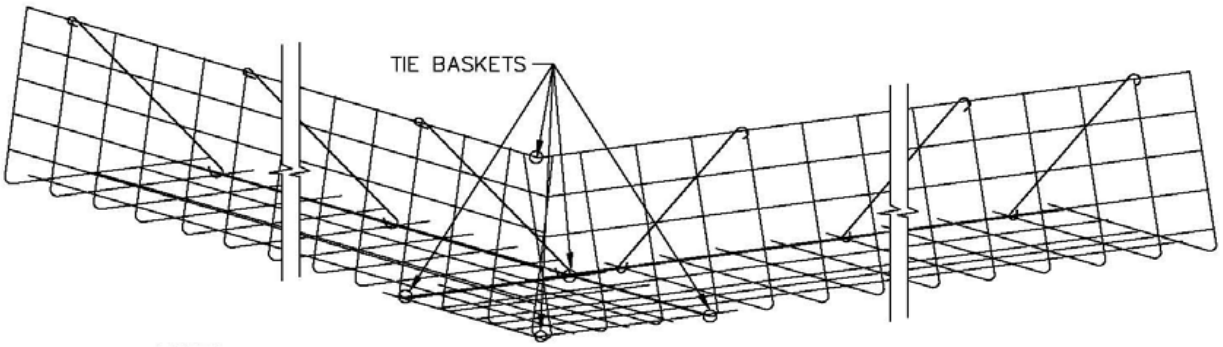

NOTES:

BEND OR CUT BASKETS TO FIT FIELD CONDITIONS
ENSURE THAT GEOTEXTILE AND BIAXIAL GEOGRID OVERLAP 1' MINIMUM

90° OUTSIDE CORNER DETAIL

NOT TO SCALE

DESCRIPTION	OUTSIDE CORNER DETAIL
FILE NAME:	WWFCD.DWG

Tensar Earth Technologies Inc.
Tensar

TYPICAL DETAIL

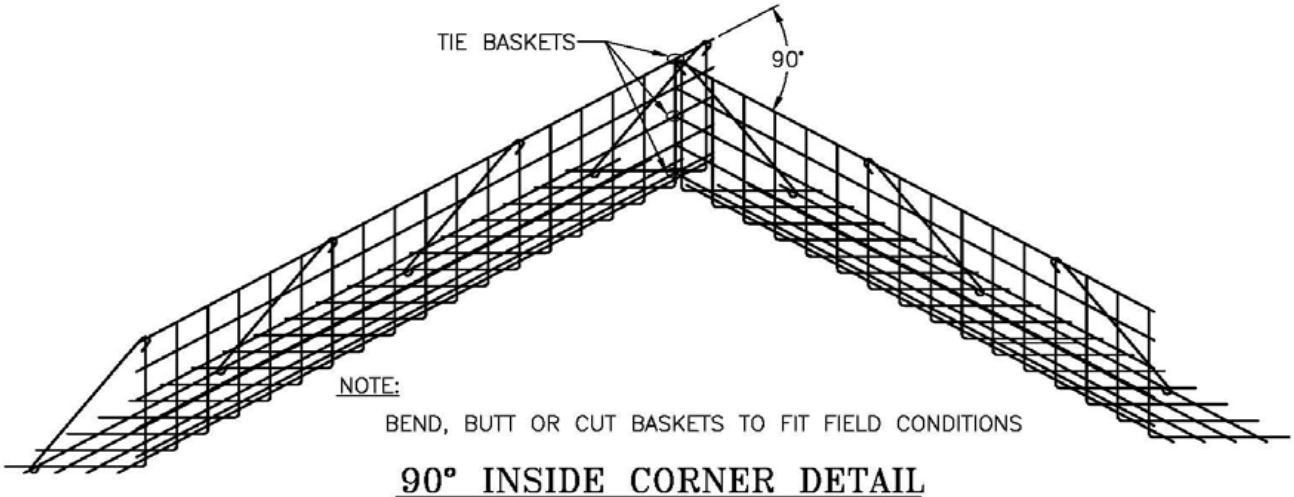

NOTE:

BEND, BUTT OR CUT BASKETS TO FIT FIELD CONDITIONS

90° INSIDE CORNER DETAIL

NOT TO SCALE

DESCRIPTION	INSIDE CORNER DETAIL
FILE NAME:	WWFCD2.DWG

Tensar Earth Technologies Inc.

Tensar•

TYPICAL DETAIL

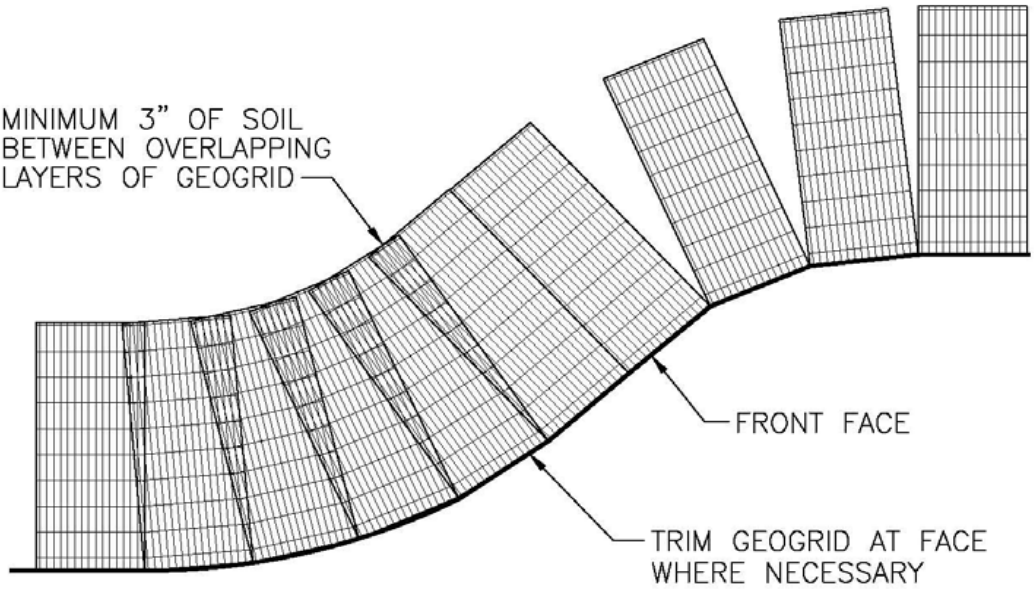

GEOGRID PLACEMENT ON CURVES

NOT TO SCALE

DESCRIPTION	GEOGRID PLACEMENT ON CURVES
FILE NAME:	GPOC2.DWG

Tensar Earth Technologies Inc.

Tensar

TYPICAL DETAIL

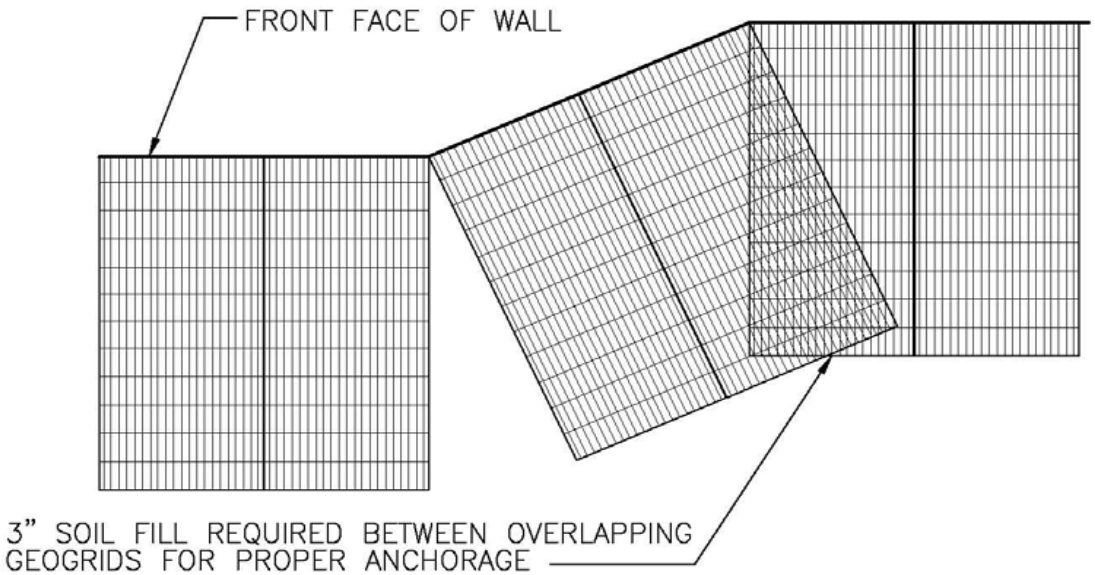

WALL CORNER DETAIL

NOT TO SCALE

DESCRIPTION	WALL CORNER DETAIL
FILE NAME:	GPOW4.DWG

Tensar Earth Technologies Inc.
Tensar

TYPICAL DETAIL

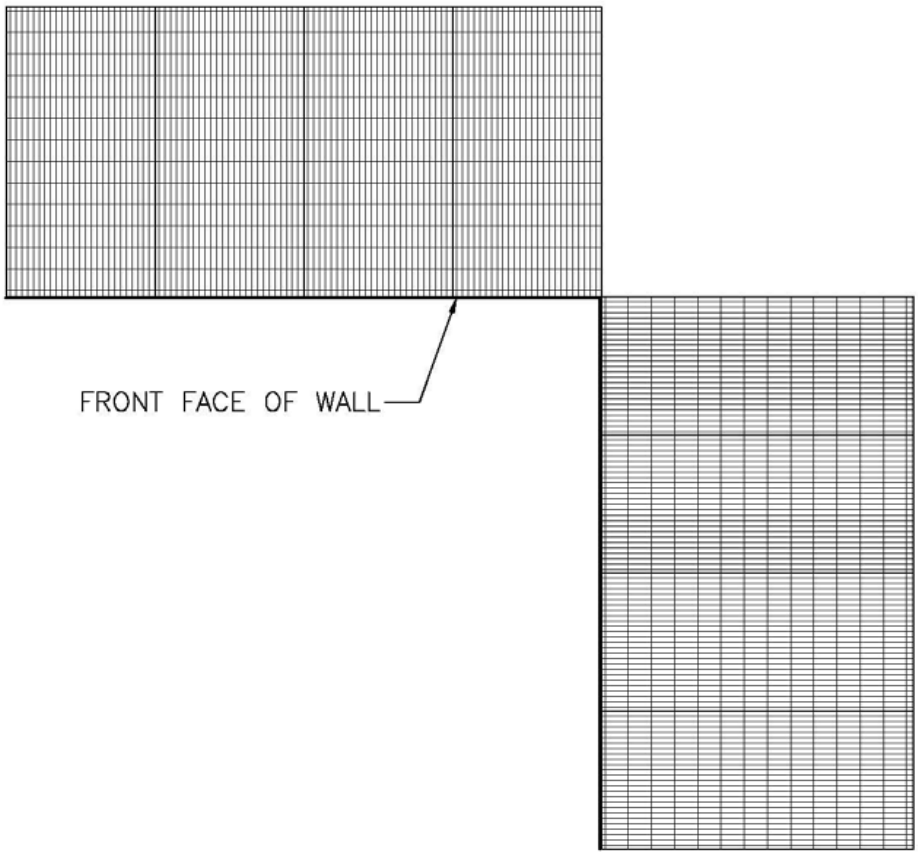

GEOGRID 90° CORNER DETAIL

NOT TO SCALE

DESCRIPTION	GEOGRID 90° CORNER DETAIL
FILE NAME:	GPOW5.DWG

Tensar Earth Technologies Inc.

Tensar

TYPICAL DETAIL

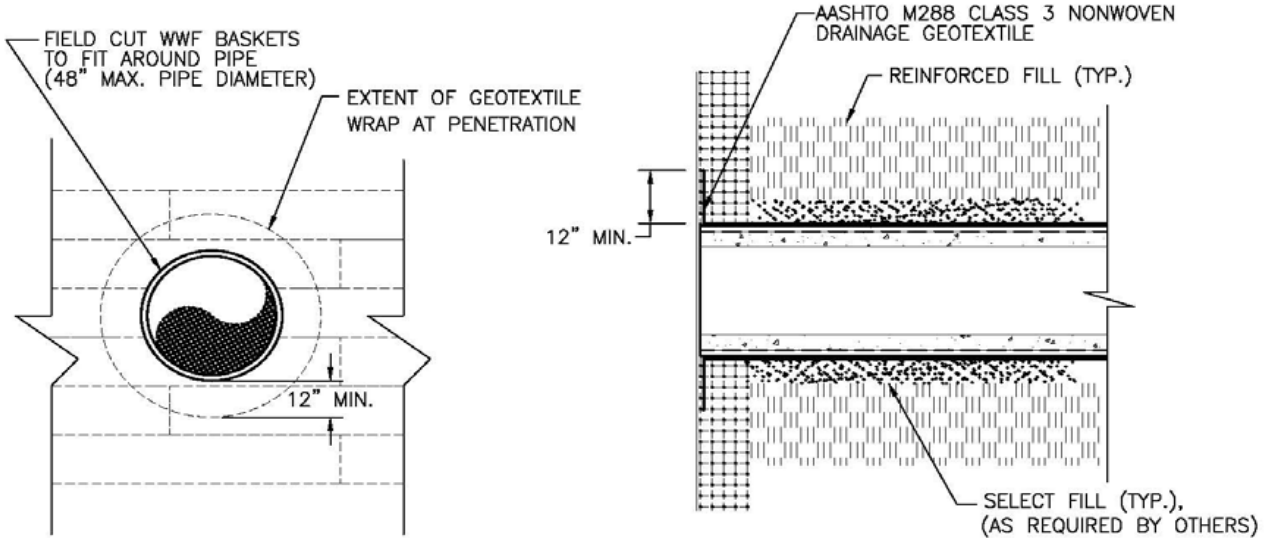

ELEVATION VIEW

PLAN VIEW

NOTES:

1. CUT WIRE FACING AS CLOSE AS POSSIBLE TO PIPE PENETRATION.
2. CUT OR TERMINATE GEOGRIDS 3 INCHES OR LESS FROM PIPE.
3. WRAP ENTIRE PIPE WITH AASHTO M288 CLASS 3 NON-WOVEN DRAINAGE GEOTEXTILE. ENSURE THAT WRAP EXTENDS AT LEAST 12 INCHES BEHIND WIRE FACING AT PENETRATION TO ENSURE NO LOSS OF FILL.
4. FOR GEOGRID LAYOUT REFER TO ELEVATION VIEW FOR LENGTH, TYPE AND LOCATION

PIPE PENETRATION DETAIL AT WELDED WIRE FACE SYSTEM

NOT TO SCALE

DESCRIPTION	PIPE PENETRATION DETAIL AT WELDED WIRE FACE SYSTEM
FILE NAME:	GPP10.DWG

Tensar Earth Technologies Inc.

Tensar

TYPICAL DETAIL

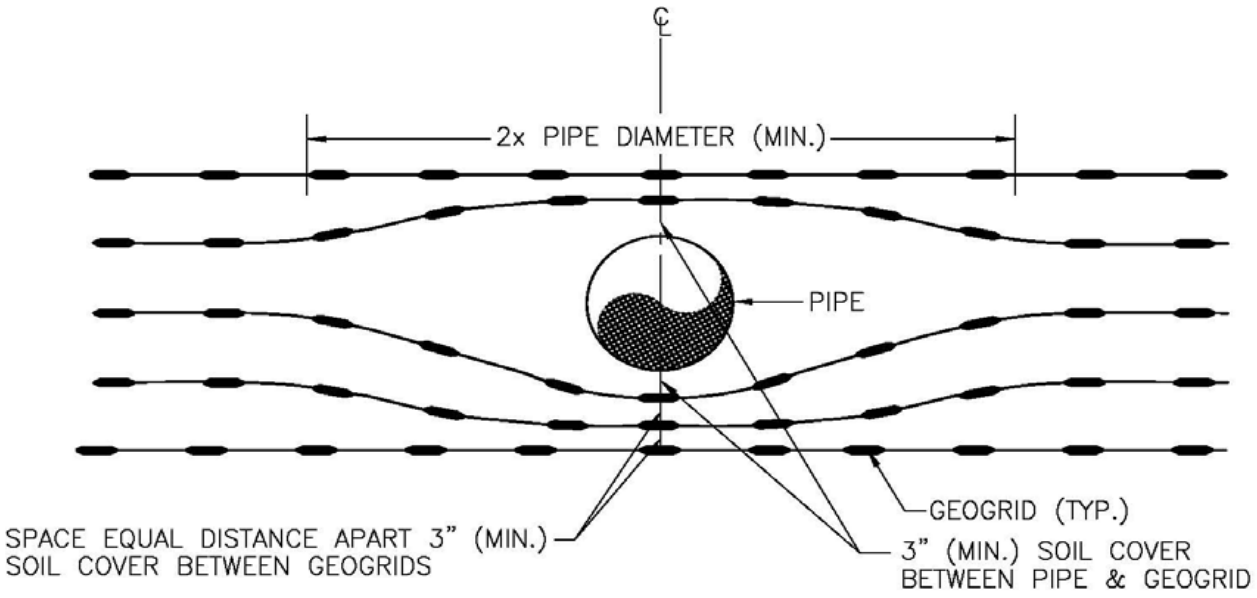

GEOGRID PLACEMENT AT PIPE

NOT TO SCALE

DESCRIPTION	GEOGRID PLACEMENT AT PIPE
FILE NAME:	GPP1.DWG

Tensar Earth Technologies Inc.

Tensar•

TYPICAL DETAIL

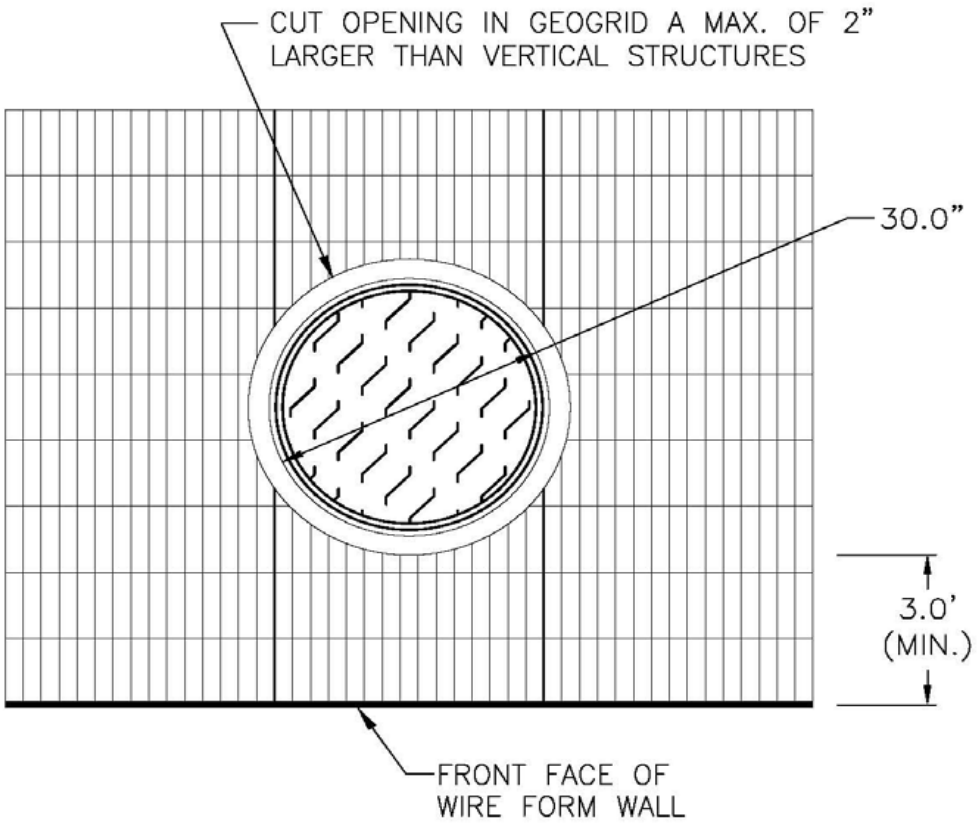

NOTE:
FOR OTHER CONDITIONS APPLY THE PROVISIONS OF ARTICLE 11.10.10.4 OF AASHTO LRFD SPECIFICATIONS.

GEOGRID PENETRATION

NOT TO SCALE

DESCRIPTION	GEOGRID PENETRATION
FILE NAME:	GP2.DWG

Tensar Earth Technologies Inc.
Tensar

TYPICAL DETAIL

TO FORM A BODKIN CONNECTION:

1. BEND THE LAST APERTURE OF ONE PIECE OF GEOGRID IN HALF.

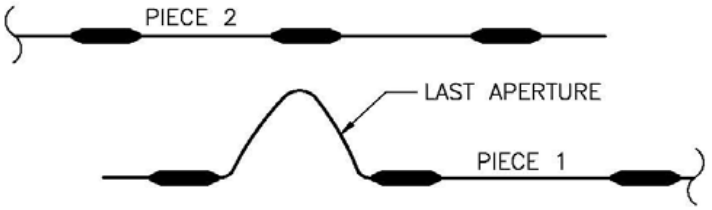

2. PASS THE BENT APERTURES THROUGH THE APERTURES OF THE SECOND PIECE OF GEOGRID AND INSERT THE BODKIN BAR INTO THE CAVITY BETWEEN THE GEOGRIDS.

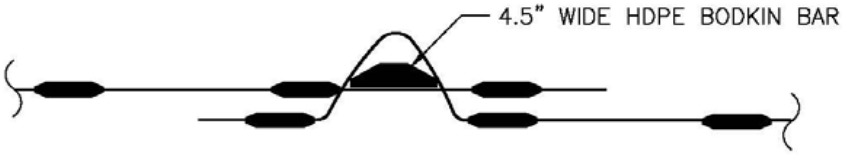

3. PULL BOTH PIECES OF GEOGRID IN OPPOSITE DIRECTIONS TO COMPLETE CONNECTION.

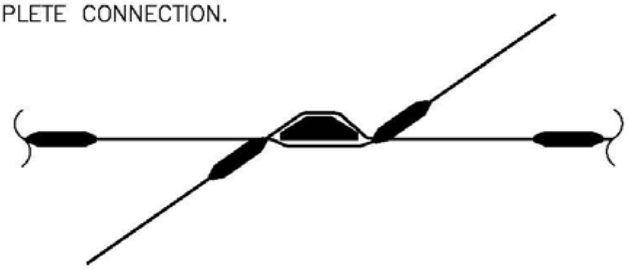

NOTE:

THE SPLICED GEOGRID PIECE ON EITHER SIDE OF THE BODKIN CONNECTION BE AT LEAST 6 FEET LONG UNLESS THE GEOGRID TERMINATES IN A FIXED CONNECTION.

BODKIN CONNECTION

NOT TO SCALE

DESCRIPTION	BODKIN CONNECTION
FILE NAME:	BC.DWG

Tensar Earth Technologies Inc.

Tensar

TYPICAL DETAIL

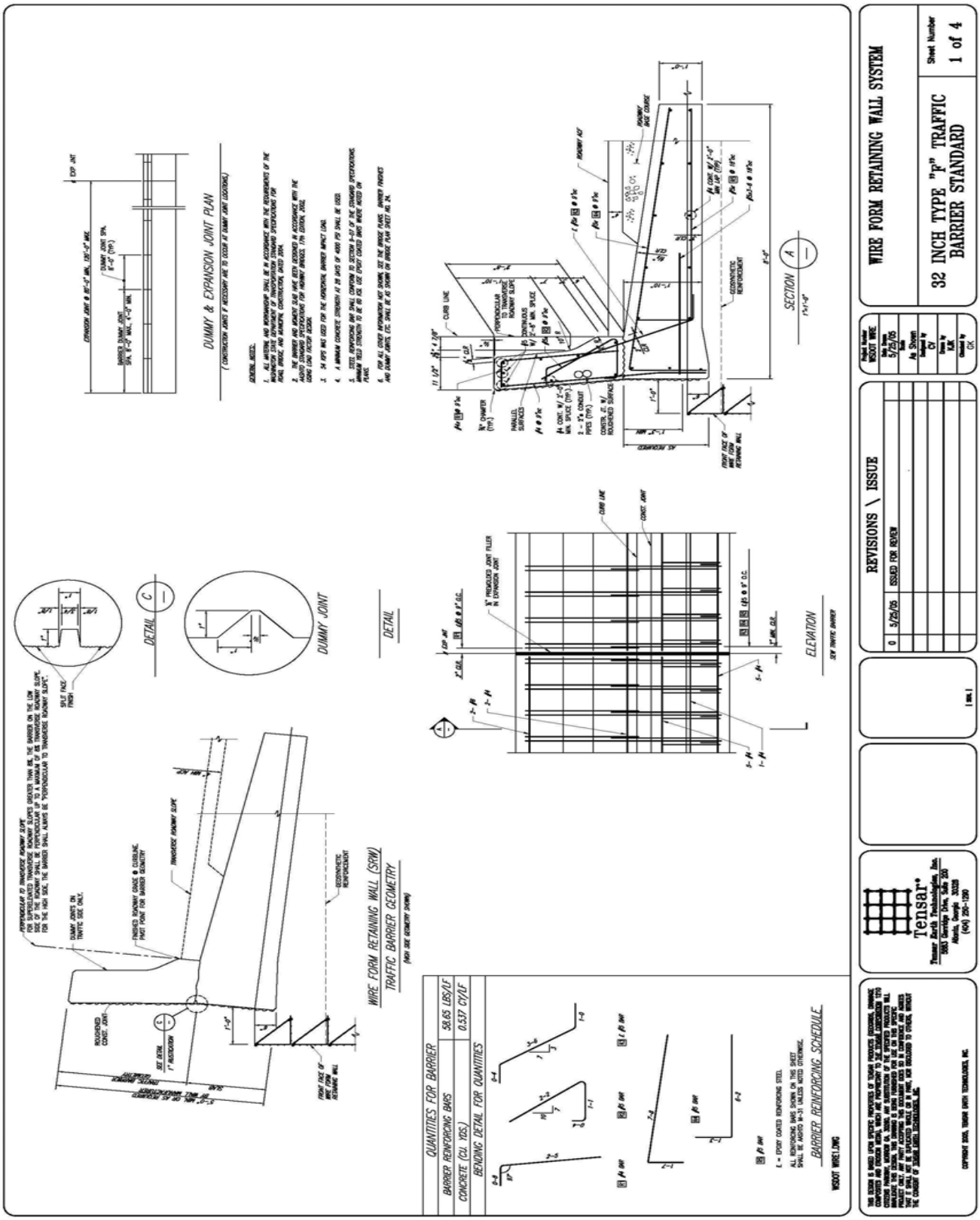
WIRE FORM RETAINING WALL SYSTEM
32 INCH TYPE "F" TRAFFIC BARRIER STANDARD
Sheet Number
1 of 4
REVISIONS \ ISSUE
0 5/25/05 ISSUED FOR REVIEW
Tensar
DUMMY & EXPANSION JOINT PLAN
DUMMY JOINT
DETAIL
ELEVATION
SECTION
WIRE FORM RETAINING WALL (SRW)
TRAFFIC BARRIER GEOMETRY
QUANTITIES FOR BARRIER
BARRIER REINFORCING BARS 58.65 LBS/LF
CONCRETE (CU. YDS.) 0.537 CY/LF
BENDING DETAIL FOR QUANTITIES
BARRIER REINFORCING SCHEDULE
WSDOT WIRE1.DWG

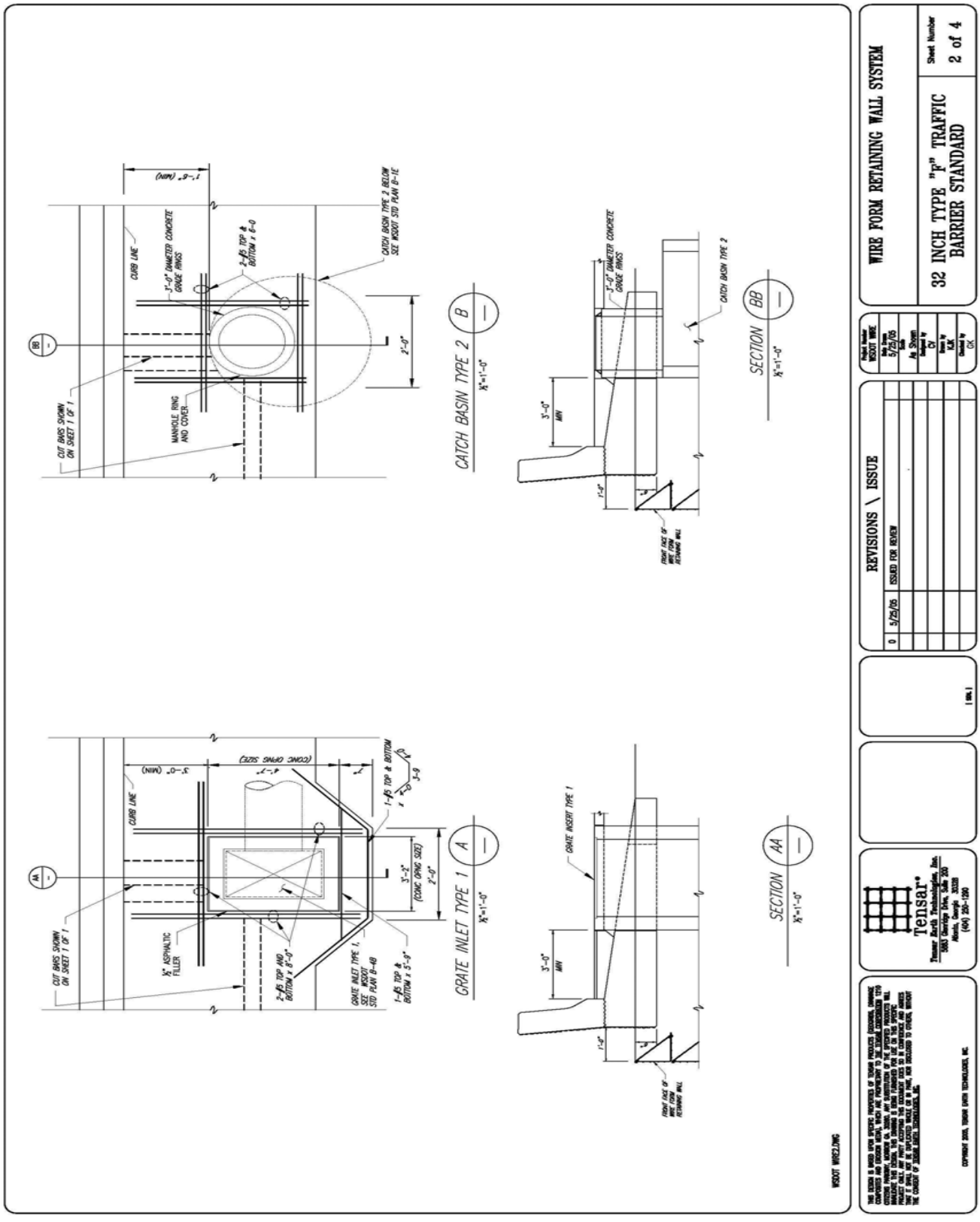
WIRE FORM RETAINING WALL SYSTEM
32 INCH TYPE "F" TRAFFIC BARRIER STANDARD
Sheet Number 2 of 4
REVISIONS \ ISSUE
0 5/25/05 ISSUED FOR REVIEW
Tensar
Tensar Earth Technologies, Inc.
5883 Glenridge Drive, Suite 200
Atlanta, Georgia 30328
(404) 250-1900
CATCH BASIN TYPE 2 B
SECTION BB
GRATE INLET TYPE 1 A
SECTION AA
CURB LINE
CUT BARS SHOWN ON SHEET 1 OF 1
MANHOLE RING AND COVER
CATCH BASIN TYPE 2 BELOW SIZE WSDOT STD PLAN 8-1E
GRATE INSERT TYPE 1
FRONT FACE OF WIRE FORM RETAINING WALL
WSDOT WFRZ_DWG

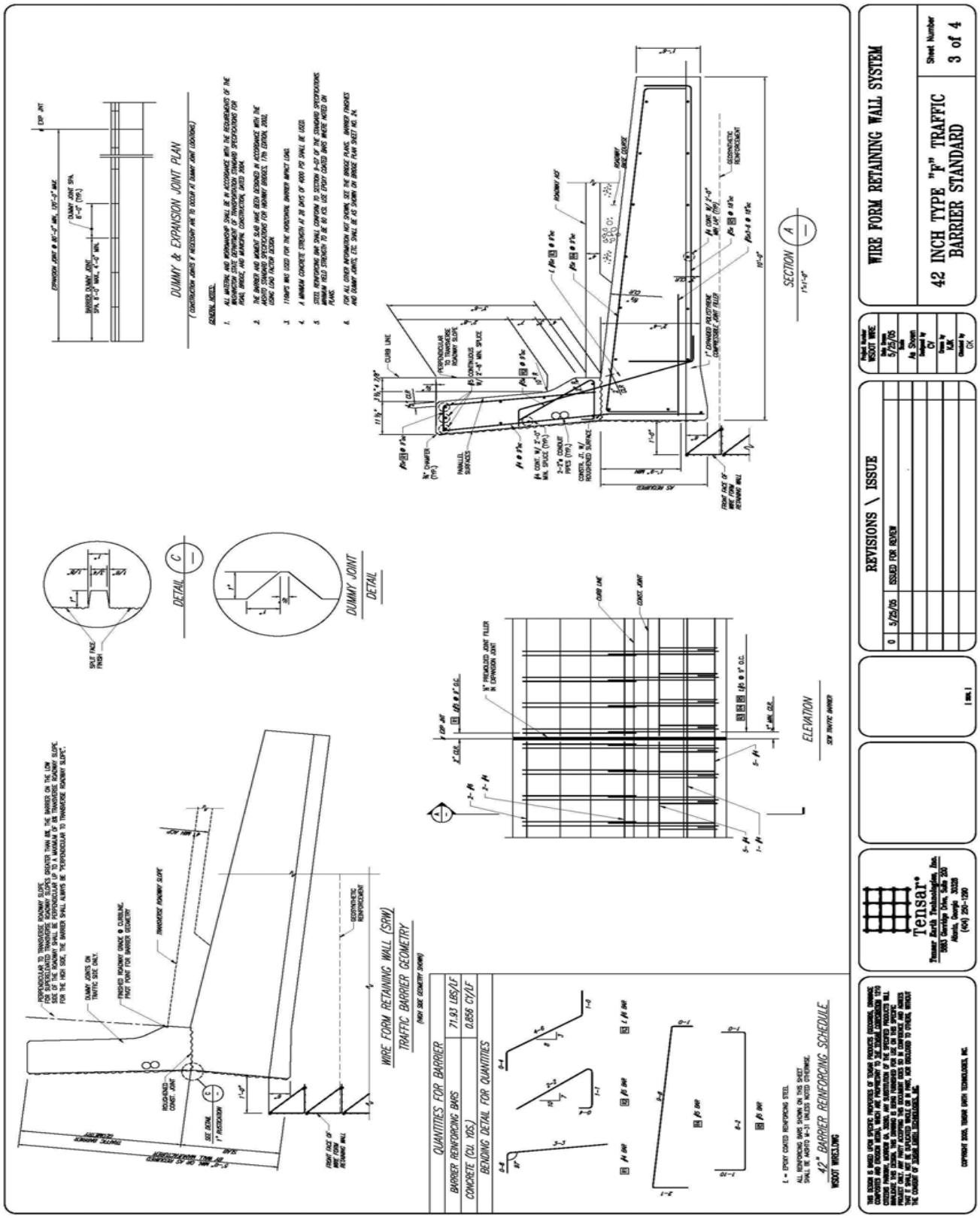
WIRE FORM RETAINING WALL SYSTEM
42 INCH TYPE "F" TRAFFIC BARRIER STANDARD
Sheet Number 3 of 4
REVISIONS \ ISSUE
0 5/25/05 ISSUED FOR REVIEW
DUMMY & EXPANSION JOINT PLAN
DUMMY JOINT DETAIL
SECTION A
ELEVATION
WIRE FORM RETAINING WALL (SRW)
TRAFFIC BARRIER GEOMETRY
QUANTITIES FOR BARRIER
BARRIER REINFORCING BARS 71.93 LBS/LF
CONCRETE (CU. YDS.) 0.856 CY/LF
BENDING DETAIL FOR QUANTITIES
42" BARRIER REINFORCING SCHEDULE
WSDOT WIRELINING
Tensar
Tensar Earth Technologies, Inc.
5883 Glenridge Drive, Suite 200
Atlanta, Georgia 30328
(404) 250-1290

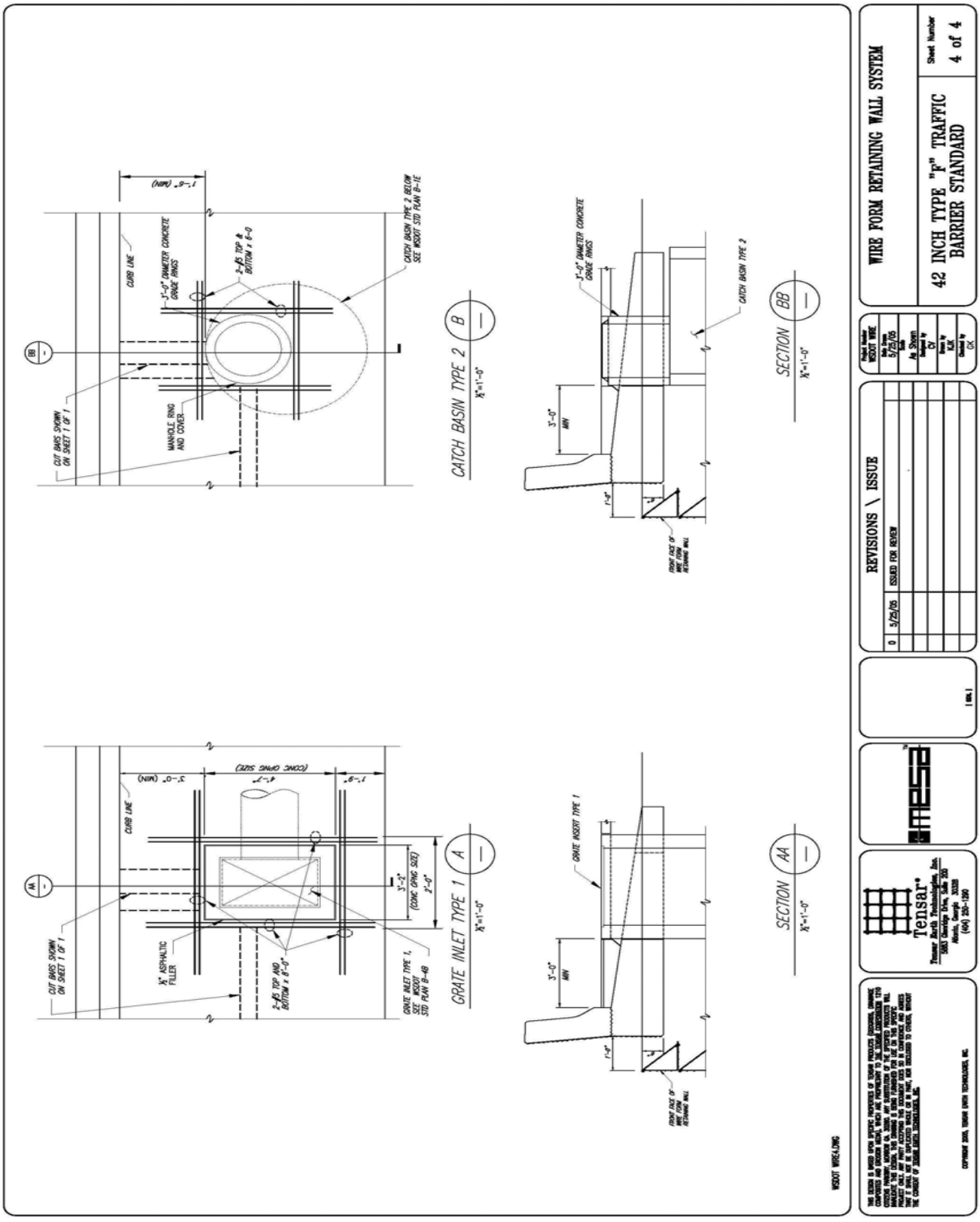
WIRE FORM RETAINING WALL SYSTEM
42 INCH TYPE "F" TRAFFIC BARRIER STANDARD
Sheet Number 4 of 4
REVISIONS \ ISSUE
ISSUED FOR REVIEW
CATCH BASIN TYPE 2
SECTION
GRATE INLET TYPE 1
CURB LINE
MANHOLE RING AND COVER
GRATE INSERT TYPE 1
CATCH BASIN TYPE 2
FRONT FACE OF WIRE FORM RETAINING WALL
Tensar
WSDOT WIRE

Appendix 15-N Preapproved Wall Appendix: Specific Requirements and Details for SSL Concrete Panel Walls

In addition to the general design requirements provided in Appendix 15-A, the following specific requirements apply to the design of the SSL MSE Plus™ Retaining Wall:

The welded wire steel soil reinforcement shall be comprised of W11, W20, or W24 smooth wire as shown and noted in the preapproved SSL MSEPlus wall system drawings. Deformed bars shall not be used for soil reinforcement. As SSL has committed to always supply soil reinforcement steel with a minimum yield strength of 75 ksi, the soil reinforcement steel shall be designed for a yield strength, Fy, of 75 ksi, which is greater than the minimum yield strength specified in ASTM A82. Because the yield strength is greater than the minimum yield strength allowed by ASTM A82, as a minimum, the yield strength of the steel shipped to the project site will be verified that it meets the minimum Fy of 75 ksi through the tensile test results for the as delivered material, and WSDOT reserves the right to conduct its own tensile tests to verify the steel yield strength.

The design of the connection between the facing panels and the soil reinforcement shall meet the AASHTO LRFD Bridge Design Specification requirements. To determine the connection strength, the following values of the short-term (i.e., uncorroded) connection strength ratio CRu shall be used:

Welded Wire Soil Reinforcement Wire Size Short-Term Connection Strength Ratio, CR_u

Welded Wire Soil Reinforcement Wire Size	Short-Term Connection Strength Ration, CR_u
W11	0.98
W20	0.87
W24	0.96

Minimum bend radii for the welded wire soil reinforcement shall be as shown in the preapproved plans (sheet 4 of 15 titled “Standard Details 3 of 3”).

Reinforcement pullout shall be calculated based on the default values for steel grid reinforcement provided in the AASHTO Specifications. If, at some future time product and soil specific pullout data is provided to support use of non-default pullout interaction coefficients, it should be noted that LRFD pullout resistance design using these product and soil specific interaction coefficients has not been calibrated using product specific data statistics and reliability theory. Therefore, the specified resistance factors in the GDM and AASHTO LRFD Specifications should not be considered applicable to product specific pullout interaction coefficients.

Approved details for the SSL MSE PlusTM wall system are provided in the following plan sheets. Exceptions and additional requirements regarding these approved details are as follows:

- In plan sheet 4 of 10, regarding the filter fabric shown, the use *Standard Specification* materials as specified in *Standard Specification* M 41-10 Section 9-33 that are similar to those specified in this plan sheet shall be used.
- In plan sheets 4 of 15, 2 of 10, and 5 of 10, there should be a minimum cover of 4 inches of soil between the steel grid and the traffic barrier reaction slab.

Quality control of the materials used in the SSL MSEPlus wall system shall meet the requirements in the *SSL Quality Control Manual*, Revision 4, dated 5/31/2012.

SPECIALIZING IN CONSTRUCTION PRODUCTS

SSL

MAIN OFFICE
4740 Scotts Valley Drive, Suite "E"
Scotts Valley, California 95066
Telephone 831/430-9300
FAX 831/430-9340

INDEX OF DRAWINGS

SHEET	DESCRIPTION
SD-01	TITLE & INDEX
SD-02	STANDARD DETAILS: 1 OF 3
SD-03	STANDARD DETAILS: 2 OF 3
SD-04	STANDARD DETAILS: 3 OF 3
SD-05	CORNER PANEL DETAILS
SD-06	DRAINAGE DETAILS: 1 OF 2
SD-07	DRAINAGE DETAILS: 2 OF 2
SD-08	PENETRATION DETAILS
SD-09	HANDLING AND UNLOADING DETAILS
SD-10	ERECTION SEQUENCE
SD-11	PANEL REBAR DETAILS: 1 OF 5
SD-12	PANEL REBAR DETAILS: 2 OF 5
SD-13	PANEL REBAR DETAILS: 3 OF 5
SD-14	PANEL REBAR DETAILS: 4 OF 5
SD-15	PANEL REBAR DETAILS: 5 OF 5

CERTIFIED ONLY WITH RESPECT TO INTERNAL STABILITY OF REINFORCED EARTH STRUCTURES



DANIEL MITCHELL
05/13/13

SPECIALIZING IN CONSTRUCTION PRODUCTS
SSL
MAIN OFFICE
4740 Scotts Valley Dr. Suite E Ph: 831-430-9300
Scotts Valley, California 95066 Fax: 831-430-9340

THIS DRAWING CONTAINS INFORMATION PROPRIETARY TO SSL AND IS FURNISHED FOR THE PROJECT SHOWN ONLY. THIS INFORMATION SHALL NOT BE TRANSMITTED TO ANY OTHER PERSON OR AGENCY WITHOUT WRITTEN CONSENT OF SSL.

THE DESIGN CONTAINED ON THESE DRAWINGS IS BASED ON INFORMATION PROVIDED BY THE OWNER. ON THE BASIS OF THIS INFORMATION, SSL HAS DESIGNED THE STRUCTURE(S) SHOWN AND IS RESPONSIBLE FOR INTERNAL STABILITY ONLY. THE OWNER REMAINS RESPONSIBLE FOR EXTERNAL STABILITY INCLUDING FOUNDATION (BEARING CAPACITY AND SETTLEMENT) AND SLOPE STABILITY (SLIDING AND ROTATION).

DRAWN BY: AJM	08/13/12
CHECK BY: GTF	08/13/12
DESIGN BY: OSM	08/13/12
CHECK BY: AJM	08/13/12
PROJ. ENGR: DSM	

NO.	DATE	REVISION DESCRIPTION	BY

TITLE & INDEX

5X5 PANEL WITH TONGUE AND GROOVE
STANDARD DETAILS AND NOTES
STATE OF WASHINGTON
DEPARTMENT OF TRANSPORTATION

Scale: NTS
Job:
Sheet: SD-01
Sheet 01 of 15

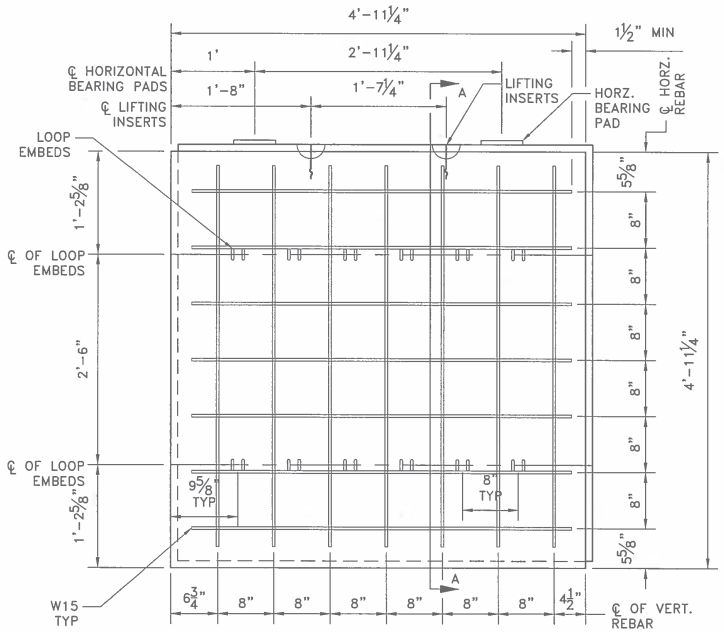

STANDARD "A" PANEL

SHOWN FROM BACK FACE

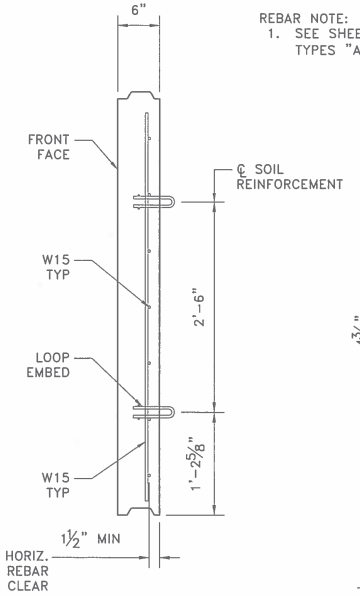

SECTION A–A

REBAR NOTE:
1. SEE SHEET SD-04 FOR USAGE OF PANEL TYPES "A", "X" AND "Y".

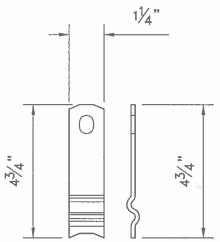

NOTE: LIFTING INSERT SHOWN IS TYPICAL. OTHER LIFTING INSERTS WITH CAPACITY EQUAL OR GREATER THAN WHAT IS SPECIFIED IN THE CASTING DRAWINGS MAY BE SUBSTITUTED.

LIFTING INSERT DETAIL

PANEL REINFORCEMENT TABLE

Panel Type	Minimum Vert. Area	Minimum Horz. Area
A	0.88 in²	0.99 in²
A2	0.99 in²	0.55 in²
X	1.40 in²	1.40 in²
X2	1.40 in²	0.77 in²
Y	1.76 in²	1.10 in²
Y2	1.76 in²	0.55 in²

9" MAX SPACING BETWEEN BARS
PANEL REINFORCEMENT MAY BE DEFORMED BARS, SMOOTH WIRE OR DEFORMED WIRE

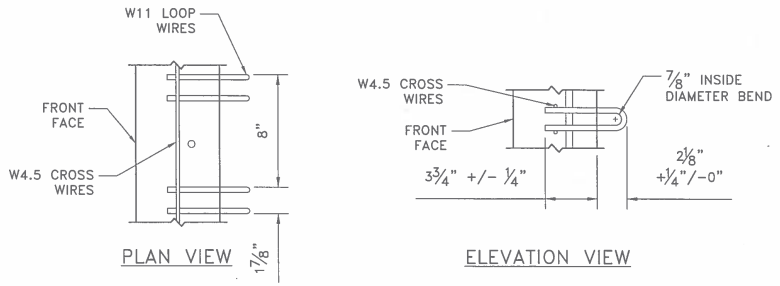

LOOP EMBED DETAILS

PANEL TOLERANCES:

OVERALL DIMENSIONS:

- STANDARD PANEL
  ± 3/16" VERTICAL
  ± 3/16" HORIZONTAL
- TOP AND SPECIAL PANELS
  ± 3/16" VERTICAL
  ± 3/16" HORIZONTAL

CONNECTION DEVICE LOCATIONS:

- EMBEDS
  ± 1" VERTICAL
  ± 1" HORIZONTAL

PANEL SQUARENESS:

- 90° PANEL CORNERS
  ± 3/16" USING 2' SQUARE
  (MEASURE 3 PANEL CORNERS)

PANEL DIAGONAL:

- PANELS WITH 90° CORNERS
  ½" MAX. DIFFERENCE BETWEEN DIAGONALS

SURFACE FINISH:

- FINISH AT FRONT FACE
  ± ⅛" IN 5'

CERTIFIED ONLY WITH RESPECT TO INTERNAL STABILITY OF REINFORCED EARTH STRUCTURES



DANIEL MITCHELL
05/13/13

SPECIALIZING IN CONSTRUCTION PRODUCTS
SSL
MAIN OFFICE
4740 Scotts Valley Dr. Suite E
Scotts Valley, California 95066
Ph: 831-430-9300
Fax: 831-430-9340

THIS DRAWING CONTAINS INFORMATION PROPRIETARY TO SSL AND IS FURNISHED FOR THE PROJECT SHOWN ONLY. THIS INFORMATION SHALL NOT BE TRANSMITTED TO ANY OTHER PERSON OR AGENCY WITHOUT WRITTEN CONSENT OF SSL.

THE DESIGN CONTAINED ON THESE DRAWINGS IS BASED ON INFORMATION PROVIDED BY THE OWNER. ON THE BASIS OF THIS INFORMATION, SSL HAS DESIGNED THE STRUCTURE(S) SHOWN AND IS RESPONSIBLE FOR INTERNAL STABILITY ONLY. THE OWNER REMAINS RESPONSIBLE FOR EXTERNAL STABILITY INCLUDING FOUNDATION (BEARING CAPACITY AND SETTLEMENT) AND SLOPE STABILITY (SLIDING AND ROTATION).

DRAWN BY: AJM	08/13/12
CHECK BY: GTF	08/13/12
DESIGN BY: OSM	08/13/12
CHECK BY: AJM	08/13/12
PROJ. ENGR: OSM	

NO.	DATE	REVISION DESCRIPTION	BY

STANDARD DETAILS: 1 OF 3

5X5 PANEL WITH TONGUE AND GROOVE
STANDARD DETAILS AND NOTES
STATE OF WASHINGTON
DEPARTMENT OF TRANSPORTATION

Scale: NTS
Job:
Sheet: SD-02
Sheet 02 of 15

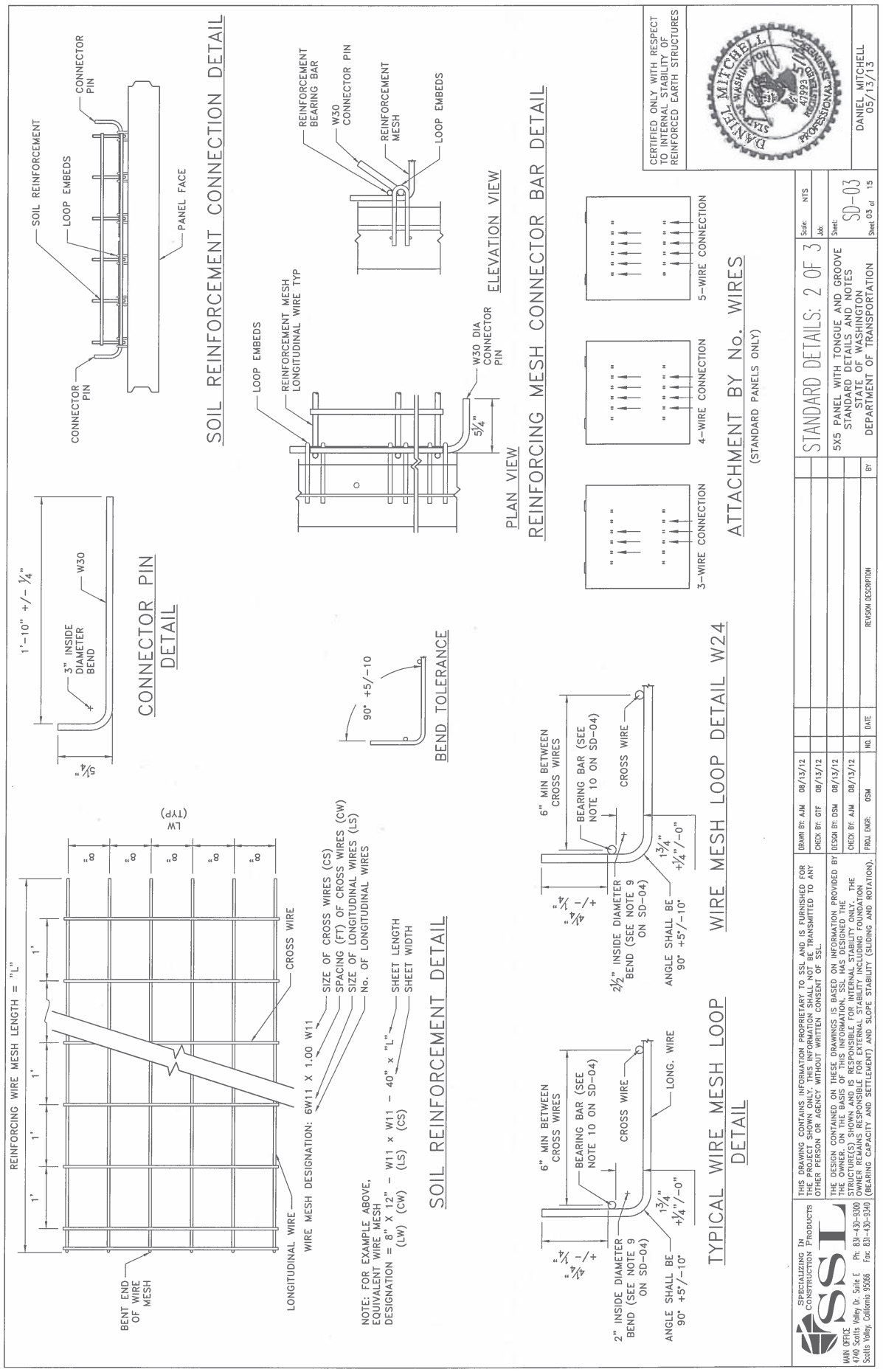
SOIL REINFORCEMENT CONNECTION DETAIL
SOIL REINFORCEMENT
LOOP EMBEDS
CONNECTOR PIN
PANEL FACE
CONNECTOR PIN
REINFORCEMENT BEARING BAR
W30 CONNECTOR PIN
REINFORCEMENT MESH
LOOP EMBEDS
LOOP EMBEDS
REINFORCEMENT MESH LONGITUDINAL WIRE TYP
W30 DIA CONNECTOR PIN
5¼"
ELEVATION VIEW
PLAN VIEW
REINFORCING MESH CONNECTOR BAR DETAIL
3-WIRE CONNECTION
4-WIRE CONNECTION
5-WIRE CONNECTION
ATTACHMENT BY No. WIRES
(STANDARD PANELS ONLY)
1'-10" +/- ¼"
3" INSIDE DIAMETER BEND
W30
5¼"
CONNECTOR PIN DETAIL
90° +5/-10
BEND TOLERANCE
REINFORCING WIRE MESH LENGTH = "L"
1'
1'
1'
1'
8"
8"
8"
8"
8"
LW (TYP)
CROSS WIRE
SIZE OF CROSS WIRES (CS)
SPACING (FT) OF CROSS WIRES (CW)
SIZE OF LONGITUDINAL WIRES (LS)
No. OF LONGITUDINAL WIRES
SHEET LENGTH
SHEET WIDTH
BENT END OF WIRE MESH
LONGITUDINAL WIRE
WIRE MESH DESIGNATION: 6W11 X 1.00 W11
NOTE: FOR EXAMPLE ABOVE, EQUIVALENT WIRE MESH DESIGNATION = 8" X 12" - W11 x W11 - 40" x "L" (LW) (CW) (LS) (CS)
SOIL REINFORCEMENT DETAIL
6" MIN BETWEEN CROSS WIRES
BEARING BAR (SEE NOTE 10 ON SD-04)
CROSS WIRE
LONG. WIRE
2" INSIDE DIAMETER BEND (SEE NOTE 9 ON SD-04)
ANGLE SHALL BE 90° +5°/-10°
13¾" +¼"/-0"
¼" +/- ¼"
TYPICAL WIRE MESH LOOP DETAIL
WIRE MESH LOOP DETAIL W24
6" MIN BETWEEN CROSS WIRES
BEARING BAR (SEE NOTE 10 ON SD-04)
CROSS WIRE
2½" INSIDE DIAMETER BEND (SEE NOTE 9 ON SD-04)
ANGLE SHALL BE 90° +5°/-10°
13¾" +¼"/-0"
¼" +/- ¼"
CERTIFIED ONLY WITH RESPECT TO INTERNAL STABILITY OF REINFORCED EARTH STRUCTURES
DANIEL MITCHELL 47993 STATE OF WASHINGTON REGISTERED PROFESSIONAL ENGINEER
DANIEL MITCHELL 05/13/13
STANDARD DETAILS: 2 OF 3
Scale: NTS
Job:
Sheet: SD-03
Sheet 03 of 15
5X5 PANEL WITH TONGUE AND GROOVE
STANDARD DETAILS AND NOTES
STATE OF WASHINGTON
DEPARTMENT OF TRANSPORTATION
DRAWN BY: AJM 08/13/12
CHECK BY: GTF 08/13/12
DESIGN BY: DSM 08/13/12
CHECK BY: AJM 08/13/12
PROJ. ENGR: DSM
NO. DATE REVISION DESCRIPTION BY
SPECIALIZING IN CONSTRUCTION PRODUCTS
SSL
MAIN OFFICE 4740 Scotts Valley Dr. Suite E Scotts Valley, California 95066 Ph: 831-430-9300 Fax: 831-430-9340
THIS DRAWING CONTAINS INFORMATION PROPRIETARY TO SSL AND IS FURNISHED FOR THE PROJECT SHOWN ONLY. THIS INFORMATION SHALL NOT BE TRANSMITTED TO ANY OTHER PERSON OR AGENCY WITHOUT WRITTEN CONSENT OF SSL.
THE DESIGN CONTAINED ON THESE DRAWINGS IS BASED ON INFORMATION PROVIDED BY THE OWNER OR HIS AGENTS. IT IS THE RESPONSIBILITY OF THE OWNER OR HIS AGENTS TO VERIFY THAT THIS INFORMATION IS CORRECT AND COMPLETE. SSL HAS DESIGNED THE STRUCTURE(S) SHOWN AND IS RESPONSIBLE FOR INTERNAL STABILITY ONLY. THE OWNER REMAINS RESPONSIBLE FOR EXTERNAL STABILITY INCLUDING FOUNDATION (BEARING CAPACITY AND SETTLEMENT) AND SLOPE STABILITY (SLIDING AND ROTATION).

MATERIAL PROPERTIES NOTES:

1. PANEL REINFORCEMENT BARS SHALL BE DEFORMED BILLET STEEL BARS FOR CONCRETE REINFORCEMENT CONFORMING TO THE SPECIFICATION OF ASTM DESIGNATION A615, GRADE 60, INCLUDING SUPPLEMENTARY REQUIREMENT S1 OR LOW ALLOY STEEL DEFORMED BARS CONFORMING TO THE SPECIFICATIONS OF ASTM DESIGNATION A706. STRUCTURAL WELDED WIRE REINFORCEMENT THAT CONFORMS TO ASTM A185/A497 OR SMOOTH SPECIFICATIONS MAY BE SUBSTITUTED FOR ASTM DESIGNATION A615.
2. W11, W20 & W24 STEEL WIRE FOR SOIL REINFORCEMENT SHALL CONFORM TO THE ASTM DESIGNATION A82. W4.5 & W11 FOR THE LOOP EMBEDS SHALL CONFORM TO THE ASTM DESIGNATION A82. W30 FOR THE CONNECTION PINS SHALL CONFORM TO THE ASTM DESIGNATION A82. THE WELDED WIRE SOIL REINFORCEMENT AND LOOP EMBED SHALL BE WELDED IN ACCORDANCE WITH ASTM DESIGNATION A185. ALL SOIL REINFORCEMENT MESH SHALL BE COMPOSED OF SMOOTH WIRE, DEFORMED WIRE SHALL NOT BE USED FOR SOIL REINFORCEMENT, LOOP EMBEDS AND CONNECTION PIN.
3. THE LOOP EMBEDS, SOIL REINFORCEMENT AND CONNECTION PINS SHALL BE GALVANIZED IN ACCORDANCE WITH ASTM DESIGNATION A123 AFTER BENDING.
4. CONCRETE PANELS TO HAVE A 28-DAY COMPRESSIVE STRENGTH OF 4000 PSI.
5. ALL PANEL REINFORCEMENT MUST HAVE A MINIMUM OF 1 1/2" COVERAGE WITH CONCRETE ON ALL SIDES.
6. FOR PANELS WITH W11 SOIL REINFORCEMENT USE "A" PANEL REINFORCEMENT. PANELS WITH W20 SOIL REINFORCEMENT USE "X" PANEL REINFORCEMENT. PANELS WITH W24 SOIL REINFORCEMENT USE "Y" PANEL REINFORCEMENT.
7. THE MOLDED PLASTIC PANEL PADS SHALL BE COMPOSED OF A HIGH DENSITY POLYETHYLENE MATERIAL, SHALL HAVE A MINIMUM TENSILE STRENGTH OF 4 KSI AND A MINIMUM TENSILE ELONGATION OF 600 PERCENT.
8. FILTER FABRIC IS A NON-WOVEN GEOTEXTILE COMPOSED OF POLYPROPYLENE FIBERS, WHICH ARE FORMED INTO A STABLE NETWORK SUCH THAT THE FIBERS RETAIN THEIR RELATIVE POSITION. FILTER FABRIC IS INERT TO BIOLOGICAL DEGRADATION AND RESISTS NATURALLY ENCOUNTERED CHEMICALS, ALKALIS AND ACIDS.
9. THE MINIMUM INSIDE BEND DIAMETER FOR W11 AND W20 WIRE USED FOR SOIL REINFORCEMENT SHALL BE NO LESS THAN TWICE THE NOMINAL DIAMETER OF THE WIRE SIZE AND IN NO INSTANCE BE LESS THAN 1 INCH. THE INSIDE BEND DIAMETER FOR W24 WIRE USED FOR SOIL REINFORCEMENT SHALL BE 2 1/2 INCHES.
10. THE BEARING BAR AND THE CROSS WIRES SHALL BE THE SAME SIZE.

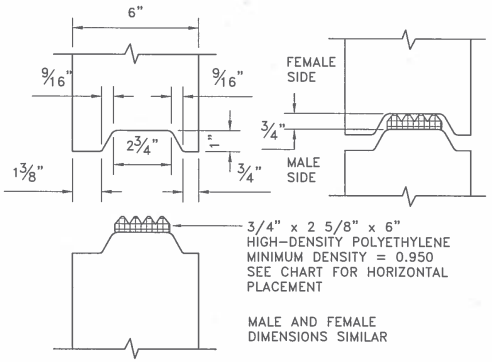

HORIZONTAL PANEL JOINT DETAIL

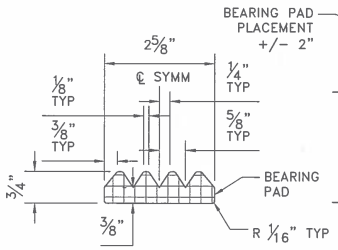

BEARING PAD DETAIL

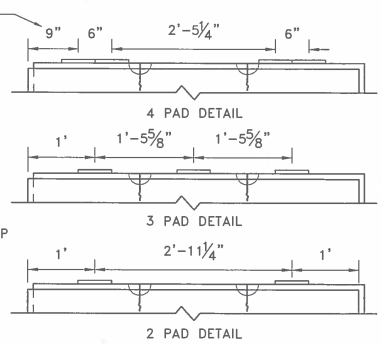

BEARING PAD PLACEMENT

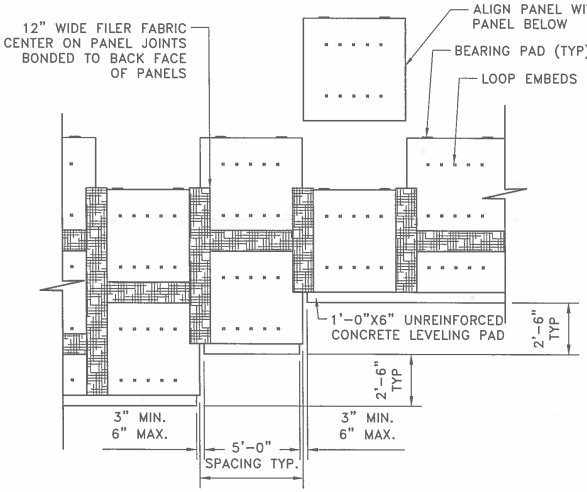

FILTER FABRIC DETAIL AND PANEL PLACEMENT

(BACK VIEW)

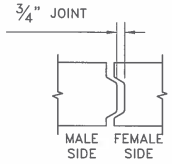

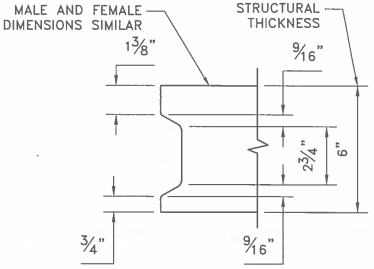

VERTICAL PANEL JOINT DETAIL

CERTIFIED ONLY WITH RESPECT TO INTERNAL STABILITY OF REINFORCED EARTH STRUCTURES

DANIEL MITCHELL STATE OF WASHINGTON 47993 REGISTERED PROFESSIONAL ENGINEER

DANIEL MITCHELL
05/13/13

SPECIALIZING IN CONSTRUCTION PRODUCTS
SSL
MAIN OFFICE
4740 Scotts Valley Dr. Suite E Ph: 831-430-9300
Scotts Valley, California 95066 Fax: 831-430-9340

THIS DRAWING CONTAINS INFORMATION PROPRIETARY TO SSL AND IS FURNISHED FOR THE PROJECT SHOWN ONLY. THIS INFORMATION SHALL NOT BE TRANSMITTED TO ANY OTHER PERSON OR AGENCY WITHOUT WRITTEN CONSENT OF SSL.

THE DESIGN CONTAINED ON THESE DRAWINGS IS BASED ON INFORMATION PROVIDED BY THE OWNER. ON THE BASIS OF THIS INFORMATION, SSL HAS DESIGNED THE STRUCTURE(S) SHOWN AND IS RESPONSIBLE FOR INTERNAL STABILITY ONLY. THE OWNER REMAINS RESPONSIBLE FOR EXTERNAL STABILITY INCLUDING FOUNDATION (BEARING CAPACITY AND SETTLEMENT) AND SLOPE STABILITY (SLIDING AND ROTATION).

DRAWN BY: AJM	08/13/12				
CHECK BY: GTF	08/13/12				
DESIGN BY: OSM	08/13/12				
CHECK BY: AJM	08/13/12				
PROJ. ENGR: OSM		NO.	DATE	REVISION DESCRIPTION	BY

STANDARD DETAILS: 3 OF 3

5X5 PANEL WITH TONGUE AND GROOVE
STANDARD DETAILS AND NOTES
STATE OF WASHINGTON
DEPARTMENT OF TRANSPORTATION

Scale: NTS
Job:
Sheet: SD-04
Sheet 04 of 15

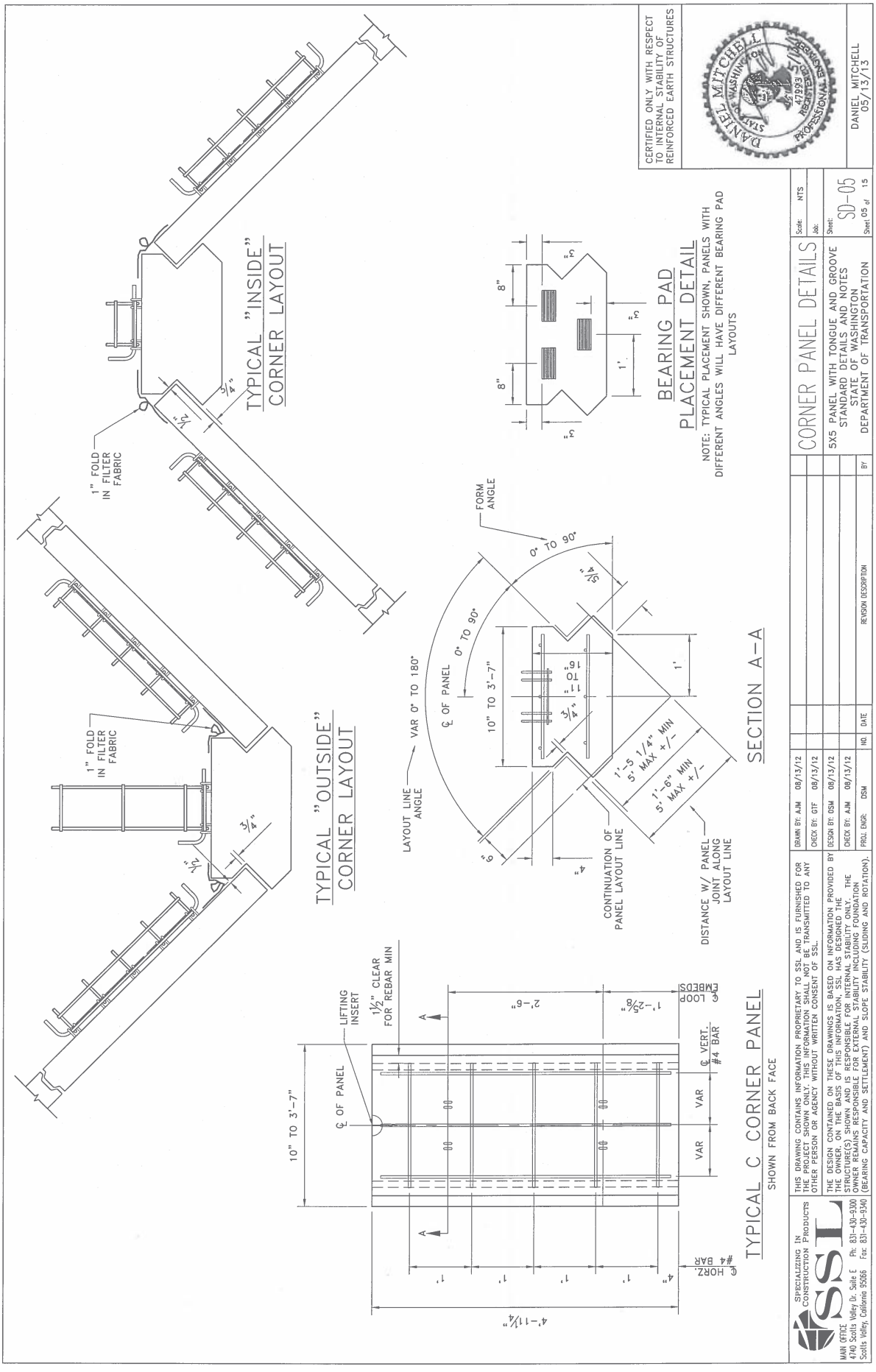
TYPICAL "INSIDE" CORNER LAYOUT
1" FOLD IN FILTER FABRIC
TYPICAL "OUTSIDE" CORNER LAYOUT
BEARING PAD PLACEMENT DETAIL
NOTE: TYPICAL PLACEMENT SHOWN, PANELS WITH DIFFERENT ANGLES WILL HAVE DIFFERENT BEARING PAD LAYOUTS
FORM ANGLE
0° TO 90°
VAR 0° TO 180°
LAYOUT LINE ANGLE
℄ OF PANEL
10" TO 3'-7"
CONTINUATION OF PANEL LAYOUT LINE
DISTANCE W/ PANEL JOINT ALONG LAYOUT LINE
SECTION A-A
TYPICAL C CORNER PANEL
SHOWN FROM BACK FACE
LIFTING INSERT
1½" CLEAR FOR REBAR MIN
℄ VERT. #4 BAR
℄ HORZ. #4 BAR
EMBEDS
LOOP
VAR
4'-11¼"
CERTIFIED ONLY WITH RESPECT TO INTERNAL STABILITY OF REINFORCED EARTH STRUCTURES
DANIEL MITCHELL
STATE OF WASHINGTON
47993
REGISTERED PROFESSIONAL ENGINEER
DANIEL MITCHELL
05/13/13
CORNER PANEL DETAILS
5X5 PANEL WITH TONGUE AND GROOVE
STANDARD DETAILS AND NOTES
STATE OF WASHINGTON
DEPARTMENT OF TRANSPORTATION
Scale: NTS
Job:
Sheet: SD-05
Sheet 05 of 15
DRAWN BY: AJM 08/13/12
CHECK BY: GTF 08/13/12
DESIGN BY: DSM 08/13/12
CHECK BY: AJM 08/13/12
PROJ. ENGR: DSM
NO. DATE REVISION DESCRIPTION BY
THIS DRAWING CONTAINS INFORMATION PROPRIETARY TO SSL AND IS FURNISHED FOR THE PROJECT SHOWN ONLY. THIS INFORMATION SHALL NOT BE TRANSMITTED TO ANY OTHER PERSON OR AGENCY WITHOUT WRITTEN CONSENT OF SSL.
THE DESIGN CONTAINED ON THESE DRAWINGS IS BASED ON INFORMATION PROVIDED BY THE OWNER, ON THE BASIS OF THIS INFORMATION, SSL HAS DESIGNED THE STRUCTURE(S) SHOWN AND IS RESPONSIBLE FOR INTERNAL STABILITY ONLY. THE OWNER REMAINS RESPONSIBLE FOR EXTERNAL STABILITY INCLUDING FOUNDATION (BEARING CAPACITY AND SETTLEMENT) AND SLOPE STABILITY (SLIDING AND ROTATION).
SPECIALIZING IN CONSTRUCTION PRODUCTS
SSL
MAIN OFFICE
4740 Scotts Valley Dr. Suite E
Scotts Valley, California 95066
Ph: 831-430-9300
Fax: 831-430-9340

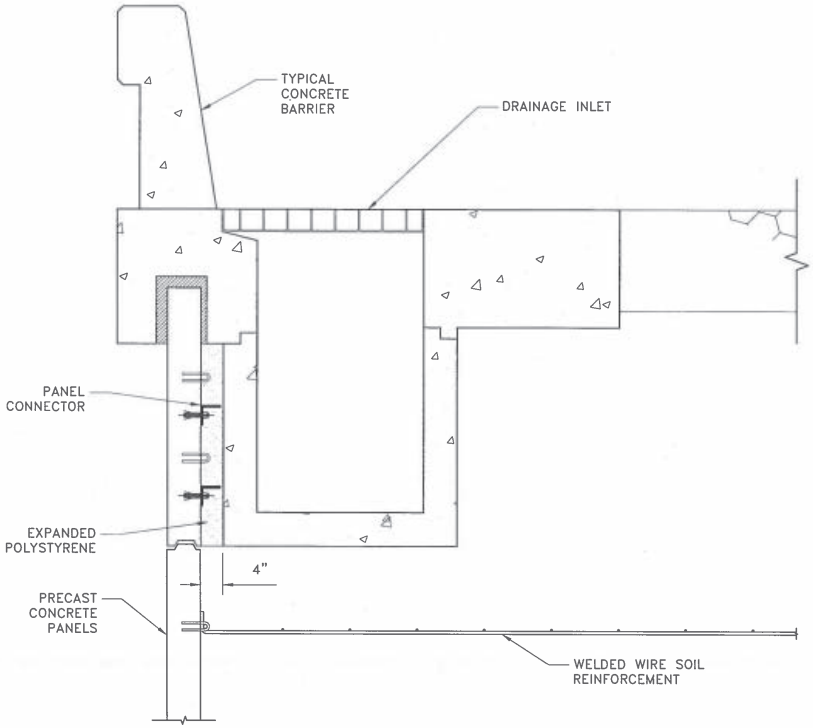

DRAINAGE INLET DETAILS
TYPICAL CROSS SECTION A–A

TYPE G1 INLET SHOWN, OTHER INLETS SIMILAR

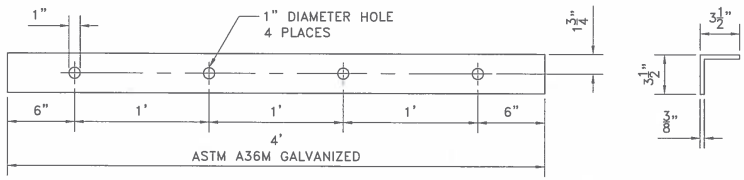

PANEL CONNECTOR DETAIL

SCALE: 1"=10"

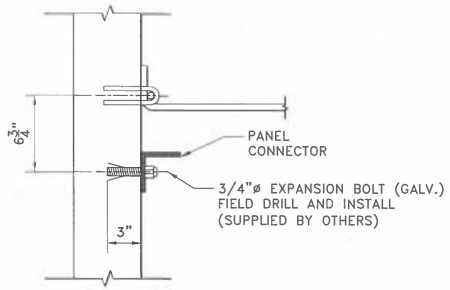

PANEL CONNECTOR CONNECTION DETAIL

SCALE: 1"=10"

NOTES:
1. OBSTRUCTION SHALL BE CONSTRUCTED BEFORE WALL INSTALLATION OR, VOID FORMER SHALL BE INSTALLED DURING BACKFILL PLACEMENT. VOID FORMER NOT SUPPLIED BY SSL.

CERTIFIED ONLY WITH RESPECT TO INTERNAL STABILITY OF REINFORCED EARTH STRUCTURES

DANIEL MITCHELL
STATE OF WASHINGTON
47993
REGISTERED
PROFESSIONAL ENGINEER

DANIEL MITCHELL
05/13/13

SPECIALIZING IN CONSTRUCTION PRODUCTS
SSL
MAIN OFFICE
4740 Scotts Valley Dr. Suite E Ph: 831-430-9300
Scotts Valley, California 95066 Fax: 831-430-9340

THIS DRAWING CONTAINS INFORMATION PROPRIETARY TO SSL AND IS FURNISHED FOR THE PROJECT SHOWN ONLY. THIS INFORMATION SHALL NOT BE TRANSMITTED TO ANY OTHER PERSON OR AGENCY WITHOUT WRITTEN CONSENT OF SSL.

THE DESIGN CONTAINED ON THESE DRAWINGS IS BASED ON INFORMATION PROVIDED BY THE OWNER. ON THE BASIS OF THIS INFORMATION, SSL HAS DESIGNED THE STRUCTURE(S) SHOWN AND IS RESPONSIBLE FOR INTERNAL STABILITY ONLY. THE OWNER REMAINS RESPONSIBLE FOR EXTERNAL STABILITY INCLUDING FOUNDATION (BEARING CAPACITY AND SETTLEMENT) AND SLOPE STABILITY (SLIDING AND ROTATION).

DRAWN BY: AJM	08/13/12				
CHECK BY: GTF	08/13/12				
DESIGN BY: DSM	08/13/12				
CHECK BY: AJM	08/13/12				
PROJ. ENGR: DSM		NO.	DATE	REVISION DESCRIPTION	BY

DRAINAGE DETAILS: 1 OF 2

5X5 PANEL WITH TONGUE AND GROOVE
STANDARD DETAILS AND NOTES
STATE OF WASHINGTON
DEPARTMENT OF TRANSPORTATION

Scale: VARIES
Job:
Sheet: SD-06
Sheet 06 of 15

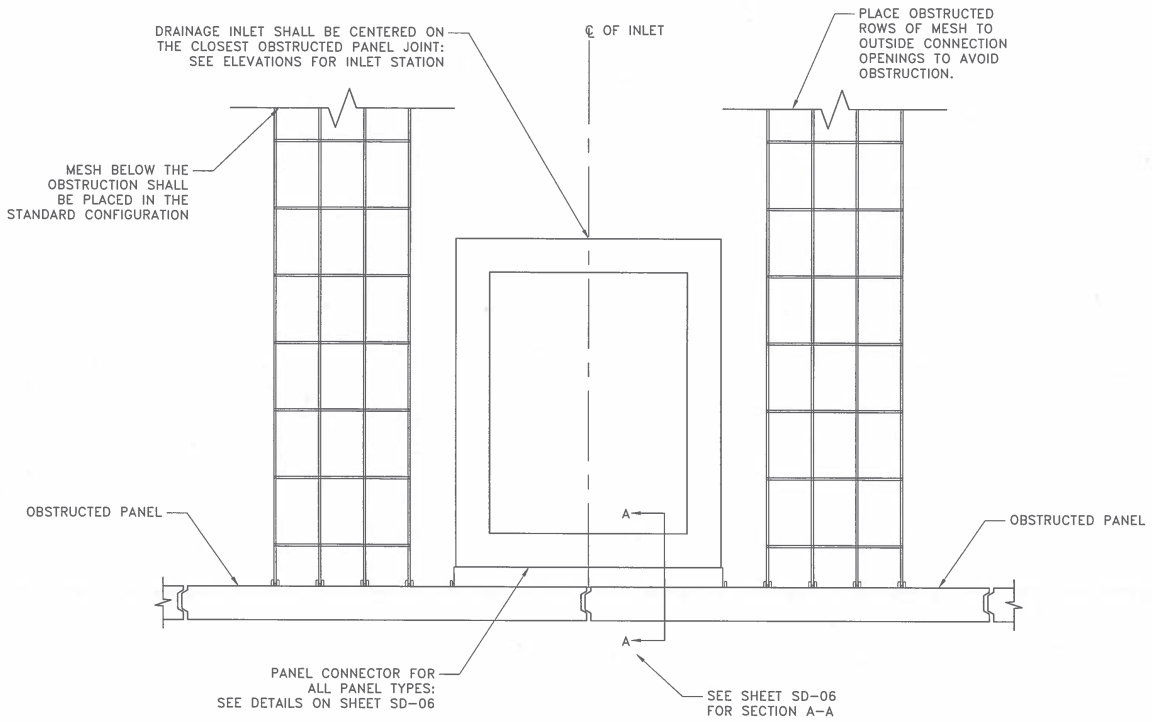

TYPICAL DRAINAGE DETAILS

(CENTER LINE OF INLET TO BE RELOCATED TO PANEL JOINT)
SCALE: 1"=20"

CERTIFIED ONLY WITH RESPECT TO INTERNAL STABILITY OF REINFORCED EARTH STRUCTURES

DANIEL MITCHELL
STATE OF WASHINGTON
47993
REGISTERED
PROFESSIONAL ENGINEER
5/13/13

DANIEL MITCHELL
05/13/13

SPECIALIZING IN CONSTRUCTION PRODUCTS
SSL
MAIN OFFICE
4740 Scotts Valley Dr. Suite E Ph: 831-430-9300
Scotts Valley, California 95066 Fax: 831-430-9340

THIS DRAWING CONTAINS INFORMATION PROPRIETARY TO SSL AND IS FURNISHED FOR THE PROJECT SHOWN ONLY. THIS INFORMATION SHALL NOT BE TRANSMITTED TO ANY OTHER PERSON OR AGENCY WITHOUT WRITTEN CONSENT OF SSL.

THE DESIGN CONTAINED ON THESE DRAWINGS IS BASED ON INFORMATION PROVIDED BY THE OWNER. ON THE BASIS OF THIS INFORMATION, SSL HAS DESIGNED THE STRUCTURE(S) SHOWN AND IS RESPONSIBLE FOR INTERNAL STABILITY ONLY. THE OWNER REMAINS RESPONSIBLE FOR EXTERNAL STABILITY INCLUDING FOUNDATION (BEARING CAPACITY AND SETTLEMENT) AND SLOPE STABILITY (SLIDING AND ROTATION).

DRAWN BY: AJM	08/13/12				
CHECK BY: GTF	08/13/12				
DESIGN BY: OSM	08/13/12				
CHECK BY: AJM	08/13/12				
PROJ. ENGR: DSM		NO.	DATE	REVISION DESCRIPTION	BY

DRAINAGE DETAILS: 2 OF 2

5X5 PANEL WITH TONGUE AND GROOVE
STANDARD DETAILS AND NOTES
STATE OF WASHINGTON
DEPARTMENT OF TRANSPORTATION

Scale: 1"=20"
Job:
Sheet: SD-07
Sheet 07 of 15

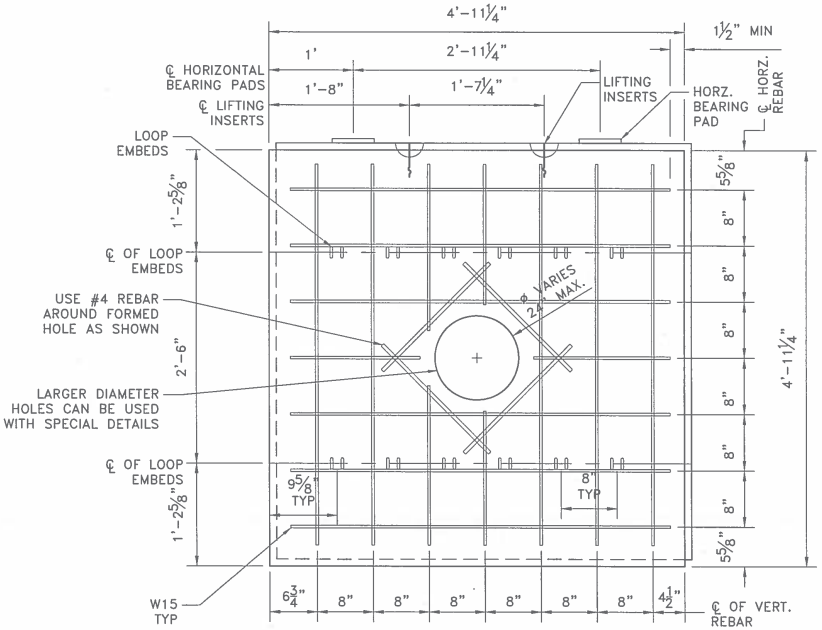

STANDARD "A" PANEL WITH A FORMED HOLE FOR PENETRATIONS THROUGH THE WALL FACE

SHOWN FROM BACK FACE

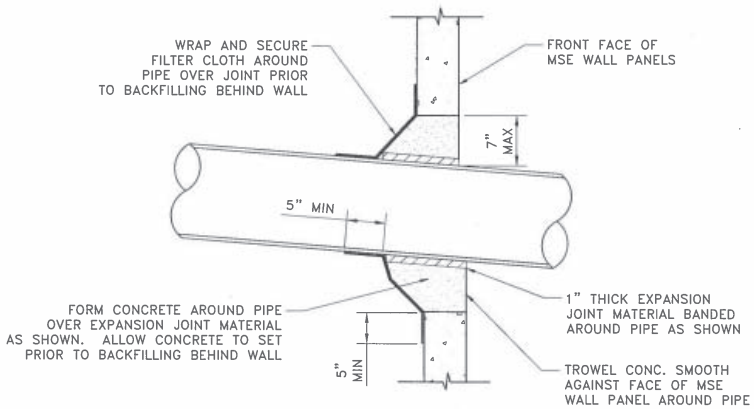

NOTES:
1. MORTAR MAY BE SUBSTITUTED FOR CONCRETE. SEE PROJECT SPECIFICATIONS FOR STRENGTH.
4. 1" EXPANSION JOINT MATERIAL MAY BE OMITTED IF THE PIPE DIAMETER IS LESS THAN 6".

TYPICAL PENETRATION DETAIL

CERTIFIED ONLY WITH RESPECT TO INTERNAL STABILITY OF REINFORCED EARTH STRUCTURES

DANIEL MITCHELL 05/13/13

SPECIALIZING IN CONSTRUCTION PRODUCTS
SSL
MAIN OFFICE
4740 Scotts Valley Dr. Suite E Ph: 831-430-9300
Scotts Valley, California 95066 Fax: 831-430-9340

THIS DRAWING CONTAINS INFORMATION PROPRIETARY TO SSL AND IS FURNISHED FOR THE PROJECT SHOWN ONLY. THIS INFORMATION SHALL NOT BE TRANSMITTED TO ANY OTHER PERSON OR AGENCY WITHOUT WRITTEN CONSENT OF SSL.

THE DESIGN CONTAINED ON THESE DRAWINGS IS BASED ON INFORMATION PROVIDED BY THE OWNER. ON THE BASIS OF THIS INFORMATION, SSL HAS DESIGNED THE STRUCTURE(S) SHOWN AND IS RESPONSIBLE FOR INTERNAL STABILITY ONLY. THE OWNER REMAINS RESPONSIBLE FOR EXTERNAL STABILITY INCLUDING FOUNDATION (BEARING CAPACITY AND SETTLEMENT) AND SLOPE STABILITY (SLIDING AND ROTATION).

DRAWN BY: AJM	08/13/12		
CHECK BY: GTF	08/13/12		
DESIGN BY: OSM	08/13/12		
CHECK BY: AJM	08/13/12		
PROJ. ENGR: OSM			

NO.	DATE	REVISION DESCRIPTION	BY

PENETRATION DETAILS

5X5 PANEL WITH TONGUE AND GROOVE
STANDARD DETAILS AND NOTES
STATE OF WASHINGTON
DEPARTMENT OF TRANSPORTATION

Scale: NTS
Job:
Sheet: SD-08
Sheet 08 of 15

PROPER STORAGE AND HANDLING OF PANELS

1. THE PANELS SHOULD BE STACKED ONE ON ONE, SEPARATED BY NON-STAINING DUNNAGE, WITH A WIDTH GREATER THAN OR EQUAL TO 2.5 INCHES (OR THE HEIGHT OF THE EMBED, WHICHEVER IS GREATER). THE AMOUNT OF PANELS PER STACK VARIES.
2. DUNNAGE SHOULD BE ALIGNED IN THE VERTICAL DIRECTION. CARE SHOULD BE TAKEN NOT TO DAMAGE THE EDGES OR FACE OF THE PANELS DURING UNLOADING, STORAGE OR SETTING. THE PANELS MAY BE UNLOADED SUPPORTED BY THE PROVIDED PALLETS (SHOWN IN FIGURE 1).
3. DURING PANEL ERECTION, PANELS SHALL BE LIFTED AND SET BY THE USE OF THE TWO LIFTING ANCHORS LOCATED IN THE TOP OF EACH PANEL (SHOWN IN FIGURE 1).
4. WHEN LIFTING PANELS FROM THE STACK, MAKE SURE THAT AN ADDITIONAL PIECE OF DUNNAGE IS BELOW THE BOTTOM EDGE OF THE PANEL TO PREVENT DAMAGE WHEN ROTATING PANELS FROM HORIZONTAL TO VERTICAL (SHOWN IN FIGURES 2).
5. LIFTING LINE MUST BE VERTICAL TO AVOID DAMAGE TO PANEL.

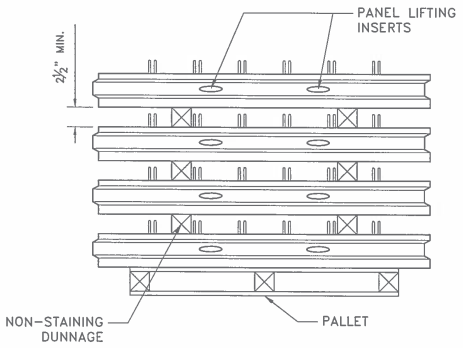

FIGURE 1

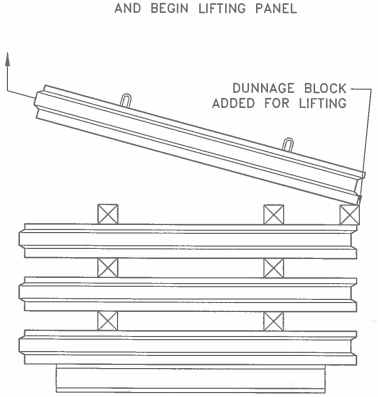

FIGURE 2

PROPER STORAGE AND HANDLING OF WELDED WIRE SOIL REINFORCING

1. SOIL REINFORCEMENT ARRIVES TO THE SITE ON A FLATBED TRUCK WITH DUNNAGE SEPARATING THE DIFFERENT BUNDLES OF SOIL REINFORCING (SEE FIGURE 3).
2. OFF-LOAD THE SOIL REINFORCING CAREFULLY, USING AT LEAST TWO BALANCED PICK POINTS SPACED NO MORE THAN 7 FEET APART (SEE FIGURE 3).
3. PLACE SOIL REINFORCING ON THE DUNNAGE BEFORE SETTING ON THE GROUND, MAKING SURE THAT THE SOIL REINFORCING DOES NOT CONTACT THE GROUND. DO NOT PLACE THE SOIL REINFORCING DIRECTLY ON THE GROUND.
4. ENSURE THAT THE DUNNAGE UNDER THE STACKED BUNDLES OF SOIL REINFORCEMENT ARE ALIGNED VERTICALLY AND ARE NOT SPACED MORE 7 FEET APART HORIZONTALLY (SEE FIGURE 3). NOTE THAT THE PLACEMENT OF THE DUNNAGE IN FIGURE 3 ARE SHOWN FOR CLARIFICATION PURPOSES ONLY. DUNNAGE MAY NEED TO BE ADDED OR REMOVED BASED ON THE LENGTH OF THE SOIL REINFORCEMENT BEING PLACED INTO STORAGE.

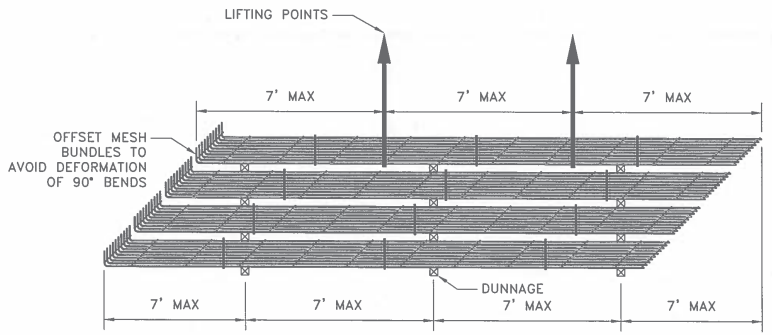

FIGURE 3

CERTIFIED ONLY WITH RESPECT TO INTERNAL STABILITY OF REINFORCED EARTH STRUCTURES

DANIEL MITCHELL
STATE OF WASHINGTON
47993
REGISTERED PROFESSIONAL ENGINEER

DANIEL MITCHELL
05/13/13

SPECIALIZING IN CONSTRUCTION PRODUCTS
SSL
MAIN OFFICE
4740 Scotts Valley Dr. Suite E Ph: 831-430-9300
Scotts Valley, California 95066 Fax: 831-430-9340

THIS DRAWING CONTAINS INFORMATION PROPRIETARY TO SSL AND IS FURNISHED FOR THE PROJECT SHOWN ONLY. THIS INFORMATION SHALL NOT BE TRANSMITTED TO ANY OTHER PERSON OR AGENCY WITHOUT WRITTEN CONSENT OF SSL.

THE DESIGN CONTAINED ON THESE DRAWINGS IS BASED ON INFORMATION PROVIDED BY THE OWNER. ON THE BASIS OF THIS INFORMATION, SSL HAS DESIGNED THE STRUCTURE(S) SHOWN AND IS RESPONSIBLE FOR INTERNAL STABILITY ONLY. THE OWNER REMAINS RESPONSIBLE FOR EXTERNAL STABILITY INCLUDING FOUNDATION (BEARING CAPACITY AND SETTLEMENT) AND SLOPE STABILITY (SLIDING AND ROTATION).

DRAWN BY: AJM	08/13/12				
CHECK BY: GTF	08/13/12				
DESIGN BY: DSM	08/13/12				
CHECK BY: AJM	08/13/12				
PROJ. ENGR: OSM		NO.	DATE	REVISION DESCRIPTION	BY

HANDLING AND UNLOADING DETAILS

5X5 PANEL WITH TONGUE AND GROOVE
STANDARD DETAILS AND NOTES
STATE OF WASHINGTON
DEPARTMENT OF TRANSPORTATION

Scale: NTS
Job:
Sheet: SD-09
Sheet 09 of 15

6.0 ERECTION SEQUENCE

SITE PREPARATION
THE AREA WHERE THE MSE PLUS™ WALL IS TO BE PLACED SHOULD BE GRADED LEVEL, TO A WIDTH EQUAL TO THE LENGTH OF THE REINFORCING MESH PLUS 6", OR TO CONTRACT SPECIFICATIONS. ANY UNSUITABLE MATERIAL SHOULD BE REMOVED AND REPLACED WITH SELECT BACKFILL AND COMPACTED ACCORDING TO THE CONTRACT SPECIFICATIONS.

CONSTRUCTION OF THE CONCRETE LEVELING PAD
CONSTRUCT THE LEVELING PADS ALONG THE LINES AND GRADES SHOWN ON SSL'S WORKING DRAWINGS. CURE THE CONCRETE AT LEAST 12 HOURS PRIOR TO THE SETTING OF THE FACING PANELS.

ERECTION OF THE BASE LINE OF PANELS
IT MUST BE EMPHASIZED THAT CARE SHOULD BE EXERCISED IN THE ALIGNMENT AND LEVELING OF THE FIRST COURSE OF PANELS.

THIS WILL INSURE THE MOST AESTHETICALLY PLEASING RESULT AND ALSO INCREASE PRODUCTION OF THE ERECTION OF SUBSEQUENT COURSES.

A) THE FIRST STEP IN THE ERECTION OF THE BASE LINE IS TO ESTABLISH THE STARTING POINT. IF A WORKING POINT IS SHOWN ON THE DRAWINGS, OR IF THE WALL MATCHES AN EXISTING STRUCTURE, THIS WOULD BE THE STARTING POINT. IF NEITHER OF THESE ARE THE CASE, THEN BEGIN THE ERECTION ON THE FOOTING WITH THE LOWEST ELEVATION.

B) THE SECOND STEP IS TO ESTABLISH A FACE OF WALL LINE. THIS LINE SHOULD BE SNAPPED ON THE CONCRETE LEVELING PAD WITH A CHALK LINE. THE METHOD FOR ESTABLISHING REFERENCE POINTS FOR THIS WILL BE LEFT TO THE DISCRETION OF THE CONTRACTOR.

C) THIRD, PLACE THE BEGINNING FIRST PANEL WITH THE OUTSIDE FACE ON THE WALL LINE SHOWN IN THE APPROVED WORKING DRAWINGS. THE PANEL IS THEN LEVELED WITH A 5 FT LEVEL AND BATTERED TO THE FILL SIDE APPROXIMATELY 5/8" IN 5 FEET. THIS BATTER OF 5/8" IS TO COMPENSATE FOR BACKFILL COMPACTION EFFORT AND WILL VARY WITH THE NATURE OF THE BACKFILL MATERIAL. THE ACTUAL AMOUNT OF BATTER WILL BE DETERMINED ONLY BY TRIAL AND ERROR.

D) THE SECOND PANEL IS THEN PLACED ADJACENT TO THE BEGINNING HALF PANEL. THE THIRD PANEL IS THEN SET. CHECK THE VERTICAL JOINT SPACING BETWEEN THE TONGUE AND GROOVE OF THE PANELS AND ADJUST TO BETWEEN 5/8" AND 3/4". THE VERTICAL JOINT SHALL BE MEASURED INSIDE THE TONGUE AND GROOVE WITHIN STRUCTURAL THICKNESS OF THE PANELS. LEVEL AND CHECK THE HEIGHT BETWEEN THE PANELS.

E) ADJUST THE PANELS WITH WEDGES OR SPACERS TO ACHIEVE ±3/8" BATTER FROM POINT OF FULL PANEL TO TOP FACE OF PARTIAL PANEL.

F) CHECK BATTER AND LEVEL OF THESE PANELS BEFORE PROCEEDING. CONTINUE PANEL ERECTION.

G) BRACE ALL OF THE FULL PANELS WITH APPROVED BRACING ON THE OUTSIDE FACE. THE BATTER SHOULD BE CHECKED BEFORE SECURING. CLAMP THE SMALLER PANELS TO THE LARGER PANELS. THE BASE COURSE MUST BE CLAMPED AND BRACED TO MAINTAIN ALIGNMENT AND BATTER. NO BRACING WILL BE REQUIRED ON SUBSEQUENT COURSES. SEE DETAILS IN FIGURE 1.

H) GLUE THE FILTER CLOTH TO THE BACK FACE OF THE PANELS OVER THE JOINTS. USING NO MORE THAN A 1/4" ADHESIVE BEAD TO HOLD THE FILTER FABRIC TO THE PANEL WHILE BACKFILL IS BEING PLACED. (FIG. 2)

I) PLACE APPROVED BACKFILL TO THE LEVEL OF THE FIRST ROW OF LOOP CONNECTORS. (FIG. 3) DO NOT PLACE THE FIRST LIFT OF BACKFILL DIRECTLY AGAINST THE PANELS. COMPACT THE ZONE WITHIN 914MM OF THE BACK OF THE WALL FACING PANEL WITHOUT CAUSING DAMAGE TO OR DISTORTION TO THE WALL FACING PANELS BY USING LIGHT MECHANICAL TAMPERS APPROVED BY THE ENGINEER.

J) ATTACH MESH TO PANELS WITH THE PIN CONNECTORS PROVIDED. ALIGN THE LOOP ON THE MESH INTO THE EMBEDS IN THE PANEL. INSERT THE PIN CONNECTOR ROD THROUGH THE PIN WINDOW AND INTO LOOPS THE 3 EMBEDS. REPEAT THIS STEP FOR THE OTHER 3 EMBEDS.

K) THE NEXT LIFTS OF BACKFILL ARE THEN PLACED (THE THICKNESS DETERMINED BY SPECIFICATIONS). FILL AND COMPACT UP TO THE TOP OF THE SMALLER PANEL AS SHOWN IN FIGURE 4. OVERLAPPING MESH REQUIRES 3" OF FILL BETWEEN LAYERS. COMPACTION TESTS SHOULD NOT BE TAKEN WITHIN 3 FEET OF THE PANELS.

ERECTION OF SUBSEQUENT COURSES
A) GLUE THE 3/4" PREFORMED BEARING PADS ON TOP OF THE SMALLER PANELS AND THEN PLACE THE SECOND ROW OF PANELS. (FIG. 5)

B) IF CARE WAS TAKEN ON THE BOTTOM COURSE OF PANELS, LITTLE IF ANY LEVELING SHOULD BE REQUIRED. THE BATTER MAY BE SET BY USING WEDGES BETWEEN THE CLAMP AND PANEL OR IN THE HORIZONTAL PANEL JOINT.

C) PLACE FILTER CLOTH ON BACK FACE OF PANELS. (FIG. 5)

D) PLACE THE BACKFILL UP TO THE NEXT LEVEL OF MESH, INSTALL THE MESH AS ABOVE, AND REPEAT THIS SEQUENCE FOR THE REMAINING WALL HEIGHT. FILL MAY BE SLOPED DOWNWARD TOWARD THE PANELS WITHIN 610MM OF THE BACK FACE IF NECESSARY TO PREVENT EXCESSIVE OUTWARD MOVEMENT WHEN COMPACTING THE BACKFILL.

E) INSTALL END AND TOP PANELS AS REQUIRED.

F) CONTINUE THE ABOVE PROCEDURES UNTIL ALL FACING PANELS ARE INSTALLED.

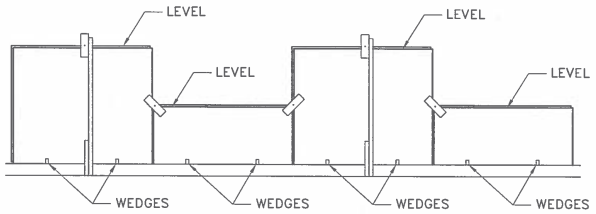

FIGURE 1 FRONT VIEW

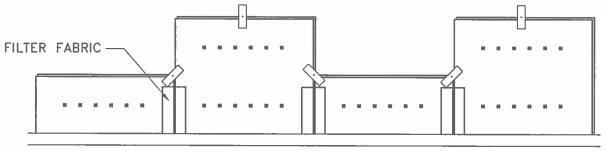

FIGURE 2 BACK VIEW

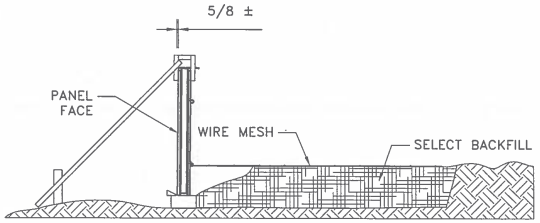

FIGURE 3

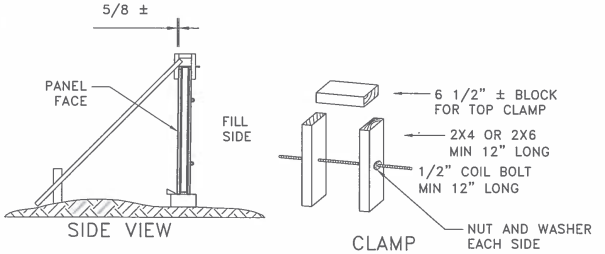

SIDE VIEW CLAMP DETAIL

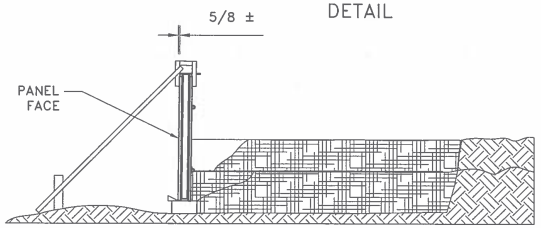

FIGURE 4

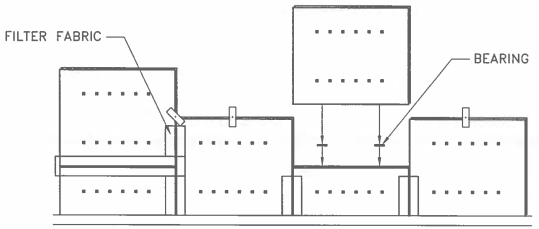

FIGURE 5 BACK VIEW

SSL, LLC. IS SUPPLYING PRECAST CONCRETE PANELS AND ACCESSORIES TO BE USED IN CONJUNCTION WITH OTHER MATERIALS IN THE CONSTRUCTION OF MSE PLUS RETAINING WALLS DETAILED TO CONFORM TO THE REQUIREMENTS OF THE OWNER'S CONTRACT DOCUMENTS. THE MSE PLUS WALL ERECTION MANUAL FURNISHED TO THE OWNER AND THE WALL CONTRACTOR PROVIDES ONLY A GENERAL EXPLANATION OF THE SYSTEM. THE CONTRACTOR IS SOLELY RESPONSIBLE TO DEVISE AND CARRY OUT A PLAN FOR ERECTION AND ASSEMBLY OF COMPONENTS, WHICH IS PROJECT SPECIFIC. SAID PLAN SHALL PROVIDE FOR UNLOADING, HANDLING, PLACING, AND BRACING COMPONENT MATERIALS WITHOUT RELYING ON THE CONCEPTUAL DRAWINGS AND GUIDELINES PROVIDED BY SSL. ACKNOWLEDGMENT OF THE RECEIPT AND REVIEW OF THE SSL WALL ERECTION MANUAL DOES NOT RELIEVE THE WALL CONTRACTOR OF RESPONSIBILITY TO COMPLY WITH THE PROJECT SPECIFICATIONS AND DRAWINGS OR STRICT COMPLIANCE WITH ALL FALL PROTECTION, LAWS, SAFETY STANDARDS, AND PROCEDURES DURING THE PERFORMANCE OF JOB SITE WORK. PRECAUTIONS SHALL BE TAKEN TO PROTECT INSPECTORS, SUPERVISION AND TRADESMAN FROM INJURY FROM SHIFTING OR FALLING PANELS DURING ERECTION.

CERTIFIED ONLY WITH RESPECT TO INTERNAL STABILITY OF REINFORCED EARTH STRUCTURES

DANIEL MITCHELL
STATE OF WASHINGTON
47893
REGISTERED PROFESSIONAL ENGINEER

DANIEL MITCHELL
05/13/13

SPECIALIZING IN CONSTRUCTION PRODUCTS
SSL
MAIN OFFICE
4740 Scotts Valley Dr. Suite E Ph: 831-430-9300
Scotts Valley, California 95066 Fax: 831-430-9340

THIS DRAWING CONTAINS INFORMATION PROPRIETARY TO SSL AND IS FURNISHED FOR THE PROJECT SHOWN ONLY. THIS INFORMATION SHALL NOT BE TRANSMITTED TO ANY OTHER PERSON OR AGENCY WITHOUT WRITTEN CONSENT OF SSL.

THE DESIGN CONTAINED ON THESE DRAWINGS IS BASED ON INFORMATION PROVIDED BY THE OWNER. ON THE BASIS OF THIS INFORMATION, SSL HAS DESIGNED THE STRUCTURE(S) SHOWN AND IS RESPONSIBLE FOR INTERNAL STABILITY ONLY. THE OWNER REMAINS RESPONSIBLE FOR EXTERNAL STABILITY INCLUDING FOUNDATION (BEARING CAPACITY AND SETTLEMENT) AND SLOPE STABILITY (SLIDING AND ROTATION).

DRAWN BY: AJM	08/13/12
CHECK BY: GTF	08/13/12
DESIGN BY: OSM	08/13/12
CHECK BY: AJM	08/13/12
PROJ. ENGR: DSM	

NO.	DATE	REVISION DESCRIPTION	BY

ERECTION SEQUENCE

5X5 PANEL WITH TONGUE AND GROOVE
STANDARD DETAILS AND NOTES
STATE OF WASHINGTON
DEPARTMENT OF TRANSPORTATION

Scale: NTS
Job:
Sheet: SD-10
Sheet 10 of 15

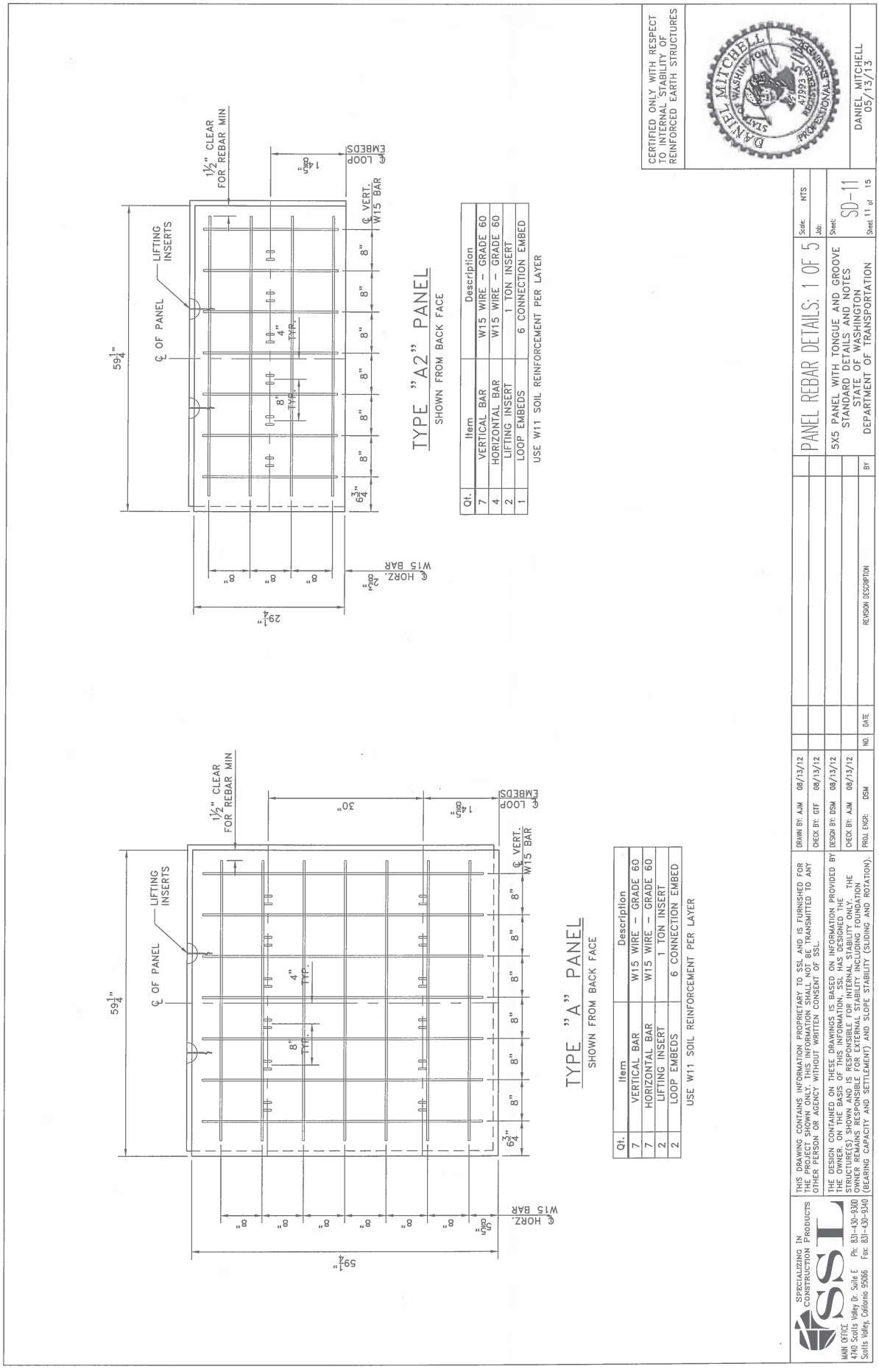
TYPE "A2" PANEL
SHOWN FROM BACK FACE
Qt. | Item | Description
7 | VERTICAL BAR | W15 WIRE – GRADE 60
4 | HORIZONTAL BAR | W15 WIRE – GRADE 60
2 | LIFTING INSERT | 1 TON INSERT
1 | LOOP EMBEDS | 6 CONNECTION EMBED
USE W11 SOIL REINFORCEMENT PER LAYER
TYPE "A" PANEL
SHOWN FROM BACK FACE
Qt. | Item | Description
7 | VERTICAL BAR | W15 WIRE – GRADE 60
7 | HORIZONTAL BAR | W15 WIRE – GRADE 60
2 | LIFTING INSERT | 1 TON INSERT
2 | LOOP EMBEDS | 6 CONNECTION EMBED
USE W11 SOIL REINFORCEMENT PER LAYER
PANEL REBAR DETAILS: 1 OF 5
5X5 PANEL WITH TONGUE AND GROOVE
STANDARD DETAILS AND NOTES
STATE OF WASHINGTON
DEPARTMENT OF TRANSPORTATION
SD-11
CERTIFIED ONLY WITH RESPECT TO INTERNAL STABILITY OF REINFORCED EARTH STRUCTURES
DANIEL MITCHELL
05/13/13
SPECIALIZING IN CONSTRUCTION PRODUCTS
SSL
MAIN OFFICE
4740 Scotts Valley Dr. Suite E
Scotts Valley, California 95066
Ph: 831-430-9300
Fax: 831-430-9340
THIS DRAWING CONTAINS INFORMATION PROPRIETARY TO SSL AND IS FURNISHED FOR THE PROJECT SHOWN ONLY. THIS INFORMATION SHALL NOT BE TRANSMITTED TO ANY OTHER PERSON OR AGENCY WITHOUT WRITTEN CONSENT OF SSL.
THE DESIGN CONTAINED ON THESE DRAWINGS IS BASED ON INFORMATION PROVIDED BY THE OWNER, ON THE BASIS OF THIS INFORMATION, SSL HAS DESIGNED THE STRUCTURE(S) SHOWN AND IS RESPONSIBLE FOR INTERNAL STABILITY ONLY. OTHER PARTIES ARE RESPONSIBLE FOR EXTERNAL STABILITY INCLUDING FOUNDATION (BEARING CAPACITY AND SETTLEMENT) AND SLOPE STABILITY (SLIDING AND ROTATION).
DRAWN BY: AJM 08/13/12
CHECK BY: GTF 08/13/12
DESIGN BY: DSM 08/13/12
CHECK BY: AJM 08/13/12
PROJ. ENGR: DSM
NO. | DATE | REVISION DESCRIPTION | BY
Scale: NTS
Job:
Sheet:
Sheet 11 of 15

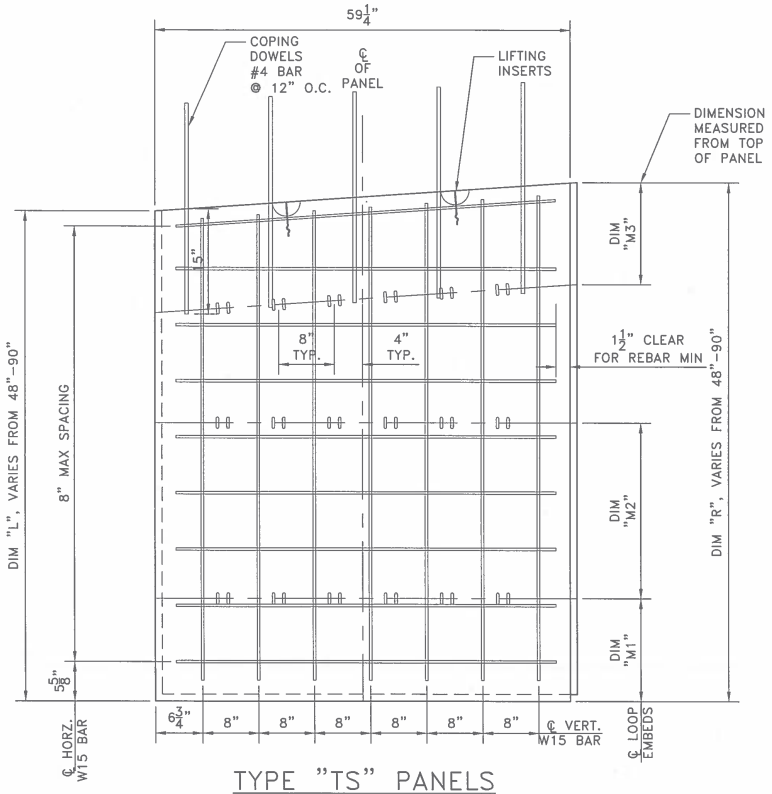

TYPE "TS" PANELS WITH 2-3 EMBEDS

SHOWN FROM BACK FACE

Qt.	Item	Description
7	VERTICAL BAR	W15 WIRE - GRADE 60
VAR	HORIZONTAL BAR	W15 WIRE - GRADE 60
2	LIFTING INSERT	1 TON INSERT
VAR	LOOP EMBEDS	6 CONNECTION EMBED

USE W11 SOIL REINFORCEMENT PER LAYER

NOTE:

FOR REBAR PANEL REINFORCEMENT:
TOP PANELS ABOVE 88" NEED 12 HORIZONTAL W15 BARS
TOP PANELS 81" TO 88" NEED 11 HORIZONTAL W15 BARS
TOP PANELS 73" TO 80" NEED 10 HORIZONTAL W15 BARS
TOP PANELS 65" TO 72" NEED 9 HORIZONTAL W15 BARS
TOP PANELS 57" TO 64" NEED 8 HORIZONTAL W15 BARS
TOP PANELS 49" TO 56" NEED 7 HORIZONTAL W15 BARS
TOP PANELS 41" TO 48" NEED 6 HORIZONTAL W15 BARS
TOP PANELS 33" TO 40" NEED 5 HORIZONTAL W15 BARS
TOP PANELS 24" TO 32" NEED 4 HORIZONTAL W15 BARS

DOWELS SHALL #4 BARS BE PLACED 12" MAX O.C. WITH 15" MIN IN THE PANEL AND 15" MIN OUT OF THE PANEL AS NEEDED. IF DOWELS ARE NEEDED THERE WILL BE A "YES" IN THE DOWEL COLUMN, IF DOWELS ARE NOT NEEDED THERE WILL BE A "NO" IN THE COLUMN

CERTIFIED ONLY WITH RESPECT TO INTERNAL STABILITY OF REINFORCED EARTH STRUCTURES

DANIEL MITCHELL
STATE OF WASHINGTON
47993
REGISTERED PROFESSIONAL ENGINEER

DANIEL MITCHELL
05/13/13

SPECIALIZING IN CONSTRUCTION PRODUCTS
SSL
MAIN OFFICE
4740 Scotts Valley Dr. Suite E Ph: 831-430-9300
Scotts Valley, California 95066 Fax: 831-430-9340

THIS DRAWING CONTAINS INFORMATION PROPRIETARY TO SSL AND IS FURNISHED FOR THE PROJECT SHOWN ONLY. THIS INFORMATION SHALL NOT BE TRANSMITTED TO ANY OTHER PERSON OR AGENCY WITHOUT WRITTEN CONSENT OF SSL.

THE DESIGN CONTAINED ON THESE DRAWINGS IS BASED ON INFORMATION PROVIDED BY THE OWNER. ON THE BASIS OF THIS INFORMATION, SSL HAS DESIGNED THE STRUCTURE(S) SHOWN AND IS RESPONSIBLE FOR INTERNAL STABILITY ONLY. THE OWNER REMAINS RESPONSIBLE FOR EXTERNAL STABILITY INCLUDING FOUNDATION (BEARING CAPACITY AND SETTLEMENT) AND SLOPE STABILITY (SLIDING AND ROTATION).

DRAWN BY: AJM	08/13/12				
CHECK BY: GTF	08/13/12				
DESIGN BY: DSM	08/13/12				
CHECK BY: AJM	08/13/12				
PROJ. ENGR: DSM		NO.	DATE	REVISION DESCRIPTION	BY

PANEL REBAR DETAILS: 2 OF 5

5X5 PANEL WITH TONGUE AND GROOVE
STANDARD DETAILS AND NOTES
STATE OF WASHINGTON
DEPARTMENT OF TRANSPORTATION

Scale: NTS
Job:
Sheet: SD-12
Sheet 12 of 15

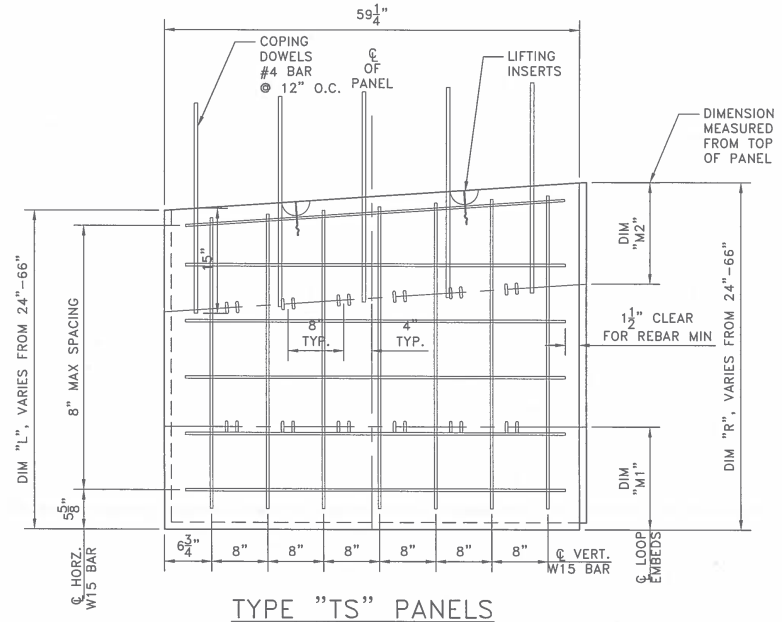

TYPE "TS" PANELS WITH 2-3 EMBEDS

SHOWN FROM BACK FACE

Qt.	Item	Description
7	VERTICAL BAR	W15 WIRE - GRADE 60
VAR	HORIZONTAL BAR	W15 WIRE - GRADE 60
2	LIFTING INSERT	1 TON INSERT
VAR	LOOP EMBEDS	6 CONNECTION EMBED

USE W11 SOIL REINFORCEMENT PER LAYER

NOTE:

FOR REBAR PANEL REINFORCEMENT:
TOP PANELS ABOVE 88" NEED 12 HORIZONTAL W15 BARS
TOP PANELS 81" TO 88" NEED 11 HORIZONTAL W15 BARS
TOP PANELS 73" TO 80" NEED 10 HORIZONTAL W15 BARS
TOP PANELS 65" TO 72" NEED 9 HORIZONTAL W15 BARS
TOP PANELS 57" TO 64" NEED 8 HORIZONTAL W15 BARS
TOP PANELS 49" TO 56" NEED 7 HORIZONTAL W15 BARS
TOP PANELS 41" TO 48" NEED 6 HORIZONTAL W15 BARS
TOP PANELS 33" TO 40" NEED 5 HORIZONTAL W15 BARS
TOP PANELS 24" TO 32" NEED 4 HORIZONTAL W15 BARS

DOWELS SHALL #4 BARS BE PLACED 12" MAX O.C. WITH 15" MIN IN THE PANEL AND 15" MIN OUT OF THE PANEL AS NEEDED. IF DOWELS ARE NEEDED THERE WILL BE A "YES" IN THE DOWEL COLUMN, IF DOWELS ARE NOT NEEDED THERE WILL BE A "NO" IN THE COLUMN

CERTIFIED ONLY WITH RESPECT TO INTERNAL STABILITY OF REINFORCED EARTH STRUCTURES

DANIEL MITCHELL
STATE OF WASHINGTON
47993
REGISTERED
PROFESSIONAL ENGINEER

DANIEL MITCHELL
05/13/13

SPECIALIZING IN CONSTRUCTION PRODUCTS
SSL
MAIN OFFICE
4740 Scotts Valley Dr. Suite E Ph: 831-430-9300
Scotts Valley, California 95066 Fax: 831-430-9340

THIS DRAWING CONTAINS INFORMATION PROPRIETARY TO SSL AND IS FURNISHED FOR THE PROJECT SHOWN ONLY. THIS INFORMATION SHALL NOT BE TRANSMITTED TO ANY OTHER PERSON OR AGENCY WITHOUT WRITTEN CONSENT OF SSL.

THE DESIGN CONTAINED ON THESE DRAWINGS IS BASED ON INFORMATION PROVIDED BY THE OWNER. ON THE BASIS OF THIS INFORMATION, SSL HAS DESIGNED THE STRUCTURE(S) SHOWN AND IS RESPONSIBLE FOR INTERNAL STABILITY ONLY. THE OWNER REMAINS RESPONSIBLE FOR EXTERNAL STABILITY INCLUDING FOUNDATION (BEARING CAPACITY AND SETTLEMENT) AND SLOPE STABILITY (SLIDING AND ROTATION).

DRAWN BY: AJM	08/13/12				
CHECK BY: GTF	08/13/12				
DESIGN BY: DSM	08/13/12				
CHECK BY: AJM	08/13/12				
PROJ. ENGR: DSM		NO.	DATE	REVISION DESCRIPTION	BY

PANEL REBAR DETAILS: 3 OF 5

5X5 PANEL WITH TONGUE AND GROOVE
STANDARD DETAILS AND NOTES
STATE OF WASHINGTON
DEPARTMENT OF TRANSPORTATION

Scale: NTS
Job:
Sheet: SD-13
Sheet 13 of 15

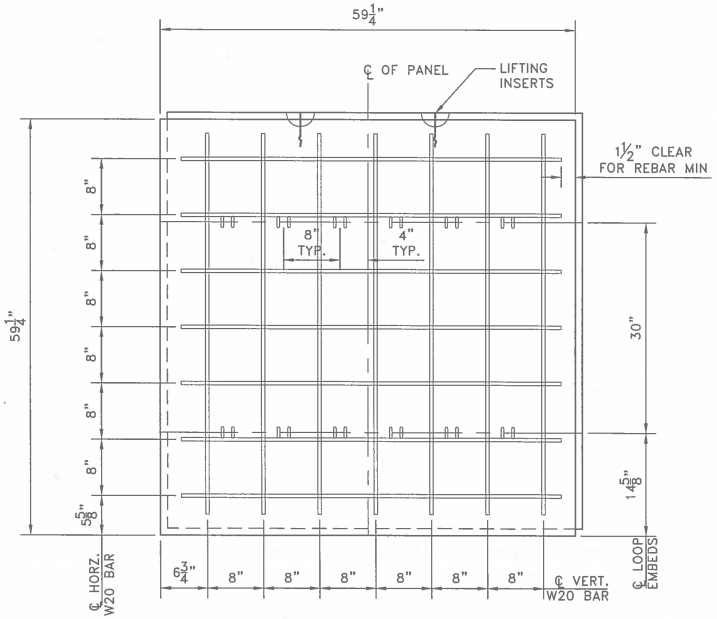

TYPE "X" PANEL

SHOWN FROM BACK FACE

Qt.	Item	Description
7	VERTICAL BAR	W20 WIRE – GRADE 60
7	HORIZONTAL BAR	W20 WIRE – GRADE 60
2	LIFTING INSERT	1 TON INSERT
2	LOOP EMBEDS	6 CONNECTION EMBED

USE W20 SOIL REINFORCEMENT PER LAYER

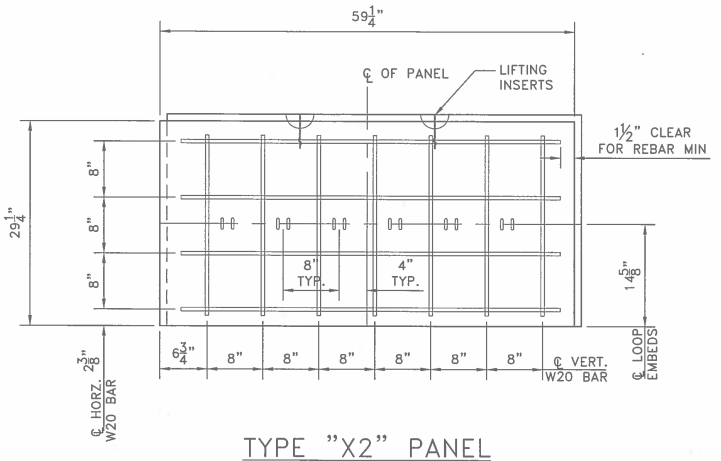

TYPE "X2" PANEL

SHOWN FROM BACK FACE

Qt.	Item	Description
7	VERTICAL BAR	W20 WIRE – GRADE 60
4	HORIZONTAL BAR	W20 WIRE – GRADE 60
2	LIFTING INSERT	1 TON INSERT
1	LOOP EMBEDS	6 CONNECTION EMBED

USE W20 SOIL REINFORCEMENT PER LAYER

CERTIFIED ONLY WITH RESPECT TO INTERNAL STABILITY OF REINFORCED EARTH STRUCTURES

DANIEL MITCHELL
STATE OF WASHINGTON
47993
REGISTERED
PROFESSIONAL ENGINEER

DANIEL MITCHELL
05/13/13

SPECIALIZING IN CONSTRUCTION PRODUCTS
SSL
MAIN OFFICE
4740 Scotts Valley Dr. Suite E Ph: 831-430-9300
Scotts Valley, California 95066 Fax: 831-430-9340

THIS DRAWING CONTAINS INFORMATION PROPRIETARY TO SSL AND IS FURNISHED FOR THE PROJECT SHOWN ONLY. THIS INFORMATION SHALL NOT BE TRANSMITTED TO ANY OTHER PERSON OR AGENCY WITHOUT WRITTEN CONSENT OF SSL.

THE DESIGN CONTAINED ON THESE DRAWINGS IS BASED ON INFORMATION PROVIDED BY THE OWNER. ON THE BASIS OF THIS INFORMATION, SSL HAS DESIGNED THE STRUCTURE(S) SHOWN AND IS RESPONSIBLE FOR INTERNAL STABILITY ONLY. THE OWNER REMAINS RESPONSIBLE FOR EXTERNAL STABILITY INCLUDING FOUNDATION (BEARING CAPACITY AND SETTLEMENT) AND SLOPE STABILITY (SLIDING AND ROTATION).

DRAWN BY: AJM	08/13/12				
CHECK BY: GTF	08/13/12				
DESIGN BY: DSM	08/13/12				
CHECK BY: AJM	08/13/12				
PROJ. ENGR: DSM		NO.	DATE	REVISION DESCRIPTION	BY

PANEL REBAR DETAILS: 4 OF 5

5X5 PANEL WITH TONGUE AND GROOVE
STANDARD DETAILS AND NOTES
STATE OF WASHINGTON
DEPARTMENT OF TRANSPORTATION

Scale: NTS
Job:
Sheet: SD-14
Sheet 14 of 15

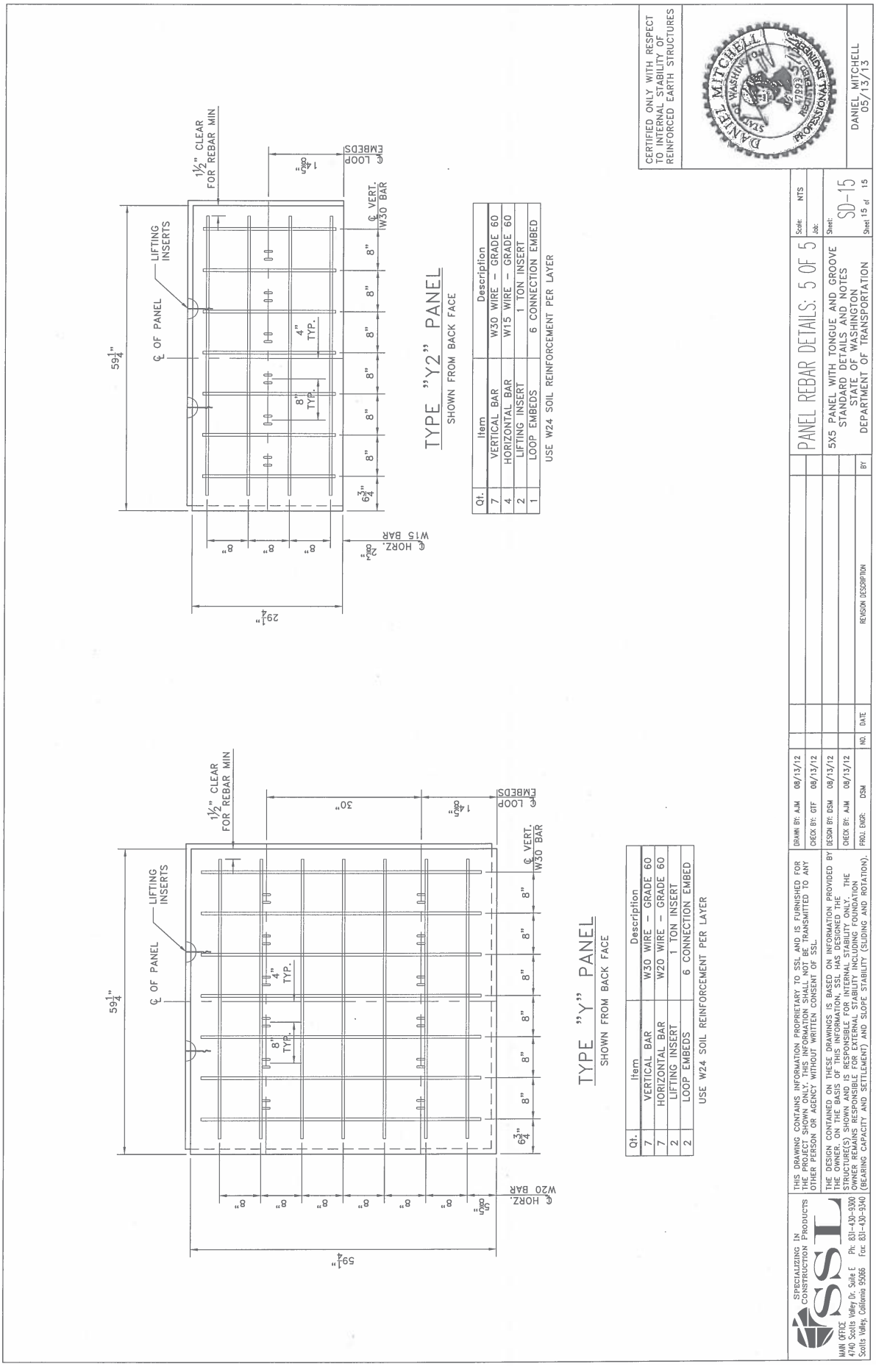
TYPE "Y2" PANEL
SHOWN FROM BACK FACE
Qt. | Item | Description
7 | VERTICAL BAR | W30 WIRE – GRADE 60
4 | HORIZONTAL BAR | W15 WIRE – GRADE 60
2 | LIFTING INSERT | 1 TON INSERT
1 | LOOP EMBEDS | 6 CONNECTION EMBED
USE W24 SOIL REINFORCEMENT PER LAYER
TYPE "Y" PANEL
SHOWN FROM BACK FACE
Qt. | Item | Description
7 | VERTICAL BAR | W30 WIRE – GRADE 60
7 | HORIZONTAL BAR | W20 WIRE – GRADE 60
2 | LIFTING INSERT | 1 TON INSERT
2 | LOOP EMBEDS | 6 CONNECTION EMBED
USE W24 SOIL REINFORCEMENT PER LAYER
LIFTING INSERTS
℄ OF PANEL
1½" CLEAR FOR REBAR MIN
℄ VERT. W30 BAR
℄ LOOP EMBEDS
℄ HORZ. W15 BAR
℄ HORZ. W20 BAR
4" TYP.
8" TYP.
PANEL REBAR DETAILS: 5 OF 5
5X5 PANEL WITH TONGUE AND GROOVE
STANDARD DETAILS AND NOTES
STATE OF WASHINGTON
DEPARTMENT OF TRANSPORTATION
SD-15
CERTIFIED ONLY WITH RESPECT TO INTERNAL STABILITY OF REINFORCED EARTH STRUCTURES
DANIEL MITCHELL
05/13/13
SPECIALIZING IN CONSTRUCTION PRODUCTS
SSL
MAIN OFFICE:
4740 Scotts Valley Dr. Suite E Ph: 831-430-9300
Scotts Valley, California 95066 Fax: 831-430-9340
THIS DRAWING CONTAINS INFORMATION PROPRIETARY TO SSL AND IS FURNISHED FOR THE PROJECT SHOWN ONLY. THIS INFORMATION SHALL NOT BE TRANSMITTED TO ANY OTHER PERSON OR AGENCY WITHOUT WRITTEN CONSENT OF SSL.
THE DESIGN CONTAINED ON THESE DRAWINGS IS BASED ON INFORMATION PROVIDED BY THE OWNER. ON THE BASIS OF THIS INFORMATION, SSL HAS DESIGNED THE CONCRETE STRUCTURES SHOWN AND IS RESPONSIBLE FOR INTERNAL STABILITY ONLY. THE OWNER REMAINS RESPONSIBLE FOR EXTERNAL STABILITY INCLUDING FOUNDATION (BEARING CAPACITY AND SETTLEMENT) AND SLOPE STABILITY (SLIDING AND ROTATION).
DRAWN BY: AJM 08/13/12
CHECK BY: GTF 08/13/12
DESIGN BY: DSM 08/13/12
CHECK BY: AJM 08/13/12
PROJ. ENGR: DSM
NO. DATE REVISION DESCRIPTION BY
Scale: NTS
Job:
Sheet:
Sheet 15 of 15

SPECIALIZING IN CONSTRUCTION PRODUCTS

SSL

MAIN OFFICE
4740 Scotts Valley Drive, Suite "E"
Scotts Valley, California 95066
Telephone 831/430-9300
FAX 831/430-9340

INDEX OF DRAWINGS

SHEET	DESCRIPTION
DT-01	TITLE & INDEX
DT-02	MAXIMUM BATTER DETAILS
DT-03	CORNER DETAILS
DT-04	CURVED LAYOUT LINE DETAILS
DT-05	TRAFFIC BARRIER SYSTEMS
DT-06	OBSTRUCTION DETAILS
DT-07	CULVERT PENETRATION DETAILS
DT-08	LEVELING PAD DETAILS
DT-09	COPING SAMPLE DETAILS
DT-10	SLIP JOINT DETAILS

CERTIFIED ONLY WITH RESPECT TO INTERNAL STABILITY OF REINFORCED EARTH STRUCTURES

DANIEL MITCHELL STATE OF WASHINGTON 47993 REGISTERED PROFESSIONAL ENGINEER

DANIEL S. MITCHELL
5/13/13

SPECIALIZING IN CONSTRUCTION PRODUCTS SSL
MAIN OFFICE
4740 Scotts Valley Dr. Suite E Ph: 831-430-9300
Scotts Valley, California 95066 Fax: 831-430-9340

THIS DRAWING CONTAINS INFORMATION PROPRIETARY TO SSL AND IS FURNISHED FOR THE PROJECT SHOWN ONLY. THIS INFORMATION SHALL NOT BE TRANSMITTED TO ANY OTHER PERSON OR AGENCY WITHOUT WRITTEN CONSENT OF SSL.

THE DESIGN CONTAINED ON THESE DRAWINGS IS BASED ON INFORMATION PROVIDED BY THE OWNER. ON THE BASIS OF THIS INFORMATION, SSL HAS DESIGNED THE STRUCTURE(S) SHOWN AND IS RESPONSIBLE FOR INTERNAL STABILITY ONLY. THE OWNER REMAINS RESPONSIBLE FOR EXTERNAL STABILITY INCLUDING FOUNDATION (BEARING CAPACITY AND SETTLEMENT) AND SLOPE STABILITY (SLIDING AND ROTATION).

DRAWN BY: AJM 8/17/12					
CHECK BY:					
DESIGN BY:					
CHECK BY:					
PROJ. ENGR:	NO.	DATE	REVISION DESCRIPTION	BY	

TITLE & INDEX

STATE OF WASHINGTON
DEPARTMENT OF TRANSPORTATION
SSL LLC. MSE PLUS
PANEL WALL SYSTEM

Scale: NTS
Job: ___
Sheet: DT-01
Sheet 01 of 10

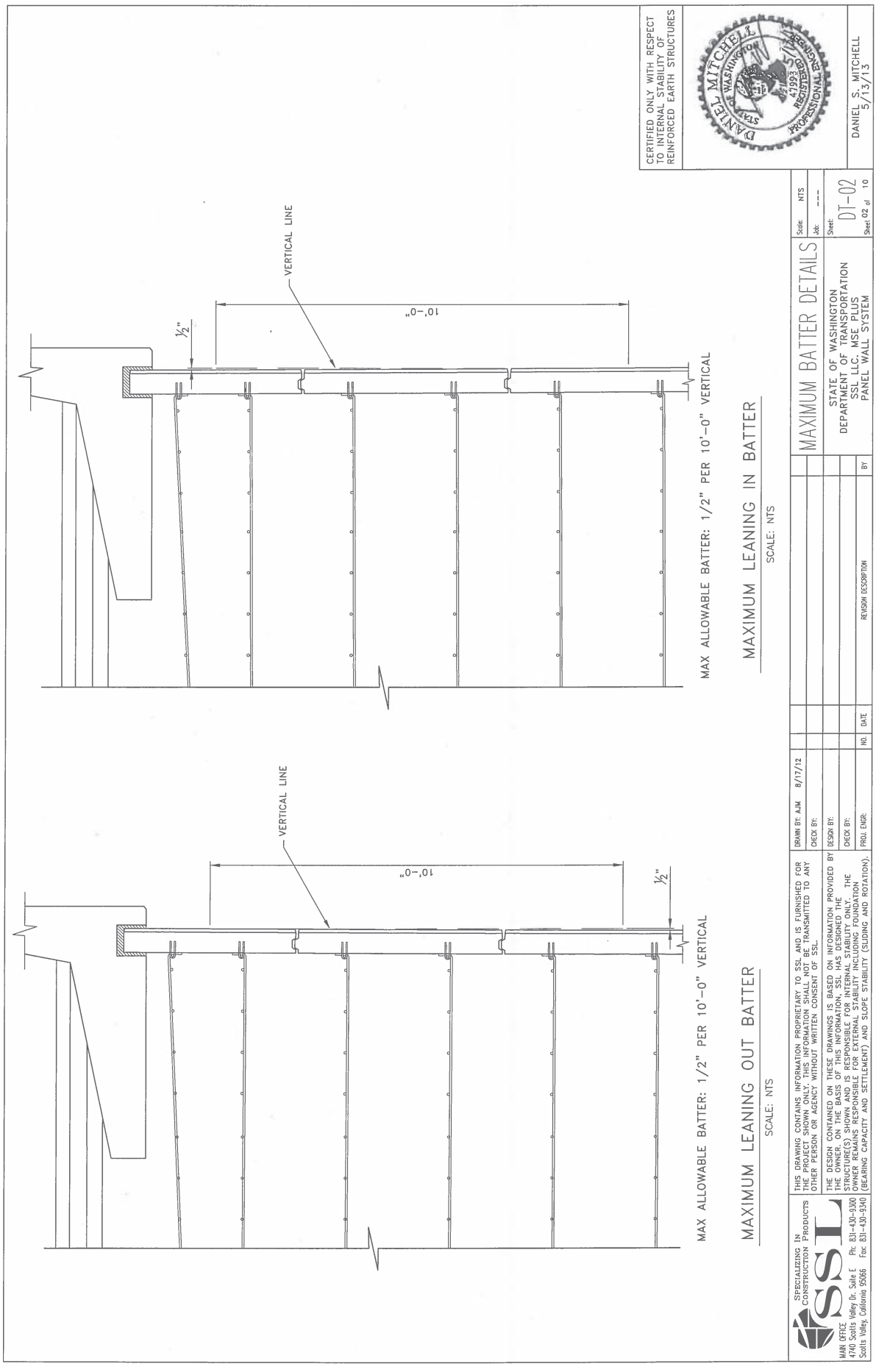
CERTIFIED ONLY WITH RESPECT TO INTERNAL STABILITY OF REINFORCED EARTH STRUCTURES
DANIEL MITCHELL
STATE OF WASHINGTON
47993
REGISTERED PROFESSIONAL ENGINEER
DANIEL S. MITCHELL
5/13/13
VERTICAL LINE
10'-0"
1/2"
MAX ALLOWABLE BATTER: 1/2" PER 10'-0" VERTICAL
MAXIMUM LEANING IN BATTER
SCALE: NTS
VERTICAL LINE
10'-0"
1/2"
MAX ALLOWABLE BATTER: 1/2" PER 10'-0" VERTICAL
MAXIMUM LEANING OUT BATTER
SCALE: NTS
SPECIALIZING IN CONSTRUCTION PRODUCTS
SSL
MAIN OFFICE
4740 Scotts Valley Dr. Suite E
Scotts Valley, California 95066
Ph: 831-430-9300
Fax: 831-430-9340
THIS DRAWING CONTAINS INFORMATION PROPRIETARY TO SSL AND IS FURNISHED FOR THE PROJECT SHOWN ONLY. THIS INFORMATION SHALL NOT BE TRANSMITTED TO ANY OTHER PERSON OR AGENCY WITHOUT WRITTEN CONSENT OF SSL.
THE DESIGN CONTAINED ON THESE DRAWINGS IS BASED ON INFORMATION PROVIDED BY THE OWNER. ON THE BASIS OF THIS INFORMATION, SSL HAS DESIGNED THE STRUCTURE(S) SHOWN AND IS RESPONSIBLE FOR INTERNAL STABILITY ONLY. THE OWNER REMAINS RESPONSIBLE FOR EXTERNAL STABILITY INCLUDING FOUNDATION (BEARING CAPACITY AND SETTLEMENT) AND SLOPE STABILITY (SLIDING AND ROTATION).
DRAWN BY: AJM 8/17/12
CHECK BY:
DESIGN BY:
CHECK BY:
PROJ. ENGR:
NO. DATE REVISION DESCRIPTION BY
MAXIMUM BATTER DETAILS
STATE OF WASHINGTON
DEPARTMENT OF TRANSPORTATION
SSL LLC, MSE PLUS
PANEL WALL SYSTEM
Scale: NTS
Job: ---
Sheet: DT-02
Sheet 02 of 10

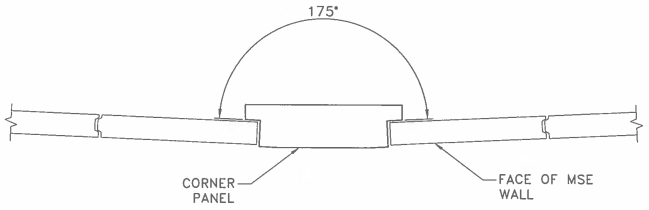

OBTUSE OUTSIDE CORNER
SCALE: NTS

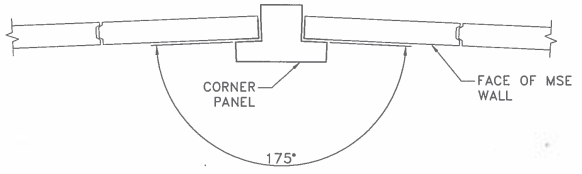

OBTUSE INSIDE CORNER
SCALE: NTS

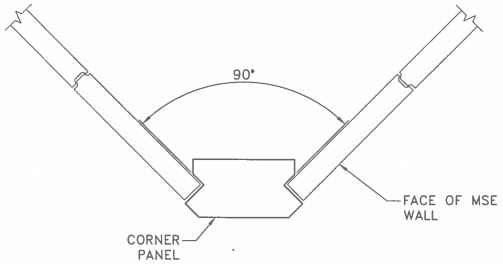

ORTHOGONAL OUTSIDE CORNER
SCALE: NTS

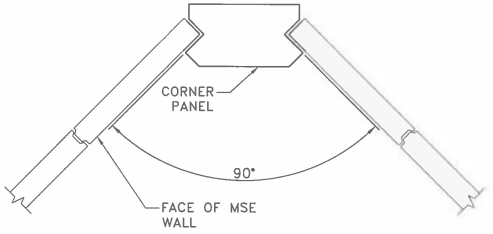

ORTHOGONAL INSIDE CORNER
SCALE: NTS

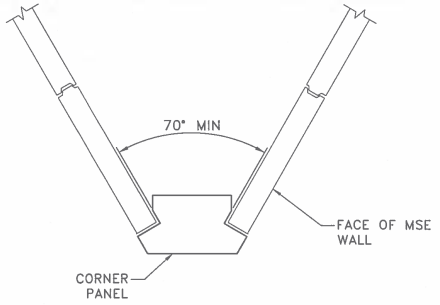

ACUTE OUTSIDE CORNER
SCALE: NTS

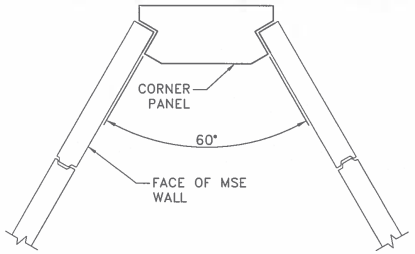

ACUTE INSIDE CORNER
SCALE: NTS

CERTIFIED ONLY WITH RESPECT TO INTERNAL STABILITY OF REINFORCED EARTH STRUCTURES



DANIEL S. MITCHELL
5/13/13

SPECIALIZING IN CONSTRUCTION PRODUCTS
SSL
MAIN OFFICE
4740 Scotts Valley Dr. Suite E Ph: 831-430-9300
Scotts Valley, California 95066 Fax: 831-430-9340

THIS DRAWING CONTAINS INFORMATION PROPRIETARY TO SSL AND IS FURNISHED FOR THE PROJECT SHOWN ONLY. THIS INFORMATION SHALL NOT BE TRANSMITTED TO ANY OTHER PERSON OR AGENCY WITHOUT WRITTEN CONSENT OF SSL.

THE DESIGN CONTAINED ON THESE DRAWINGS IS BASED ON INFORMATION PROVIDED BY THE OWNER. ON THE BASIS OF THIS INFORMATION, SSL HAS DESIGNED THE STRUCTURE(S) SHOWN AND IS RESPONSIBLE FOR INTERNAL STABILITY ONLY. THE OWNER REMAINS RESPONSIBLE FOR EXTERNAL STABILITY INCLUDING FOUNDATION (BEARING CAPACITY AND SETTLEMENT) AND SLOPE STABILITY (SLIDING AND ROTATION).

DRAWN BY: AJM 8/17/12					
CHECK BY:					
DESIGN BY:					
CHECK BY:					
PROJ. ENGR:	NO.	DATE	REVISION DESCRIPTION	BY	

CORNER DETAILS

STATE OF WASHINGTON
DEPARTMENT OF TRANSPORTATION
SSL LLC. MSE PLUS
PANEL WALL SYSTEM

Scale: NTS
Job: ---
Sheet: DT-03
Sheet 03 of 10

GENERAL NOTES:
1. MESH TYPE AND EMBED LOOPS SHOWN ARE APPROXIMATE. REFER TO WALL ELEVATIONS FOR MESH LENGTH AND TYPE. REFER TO PANEL DETAILS FOR EMBED LOOP NUMBER AND SPACING.
2. SEE OBSTRUCTION DETAIL FOR ADDITIONAL INFORMATION.
3. VERIFY LOCATIONS OF OBSTRUCTIONS.
4. SOME REINFORCEMENT MAY NOT BE SHOWN FOR CLARITY.
5. REFER TO WALL ELEVATIONS FOR ACTUAL FINISH TYPE USED.

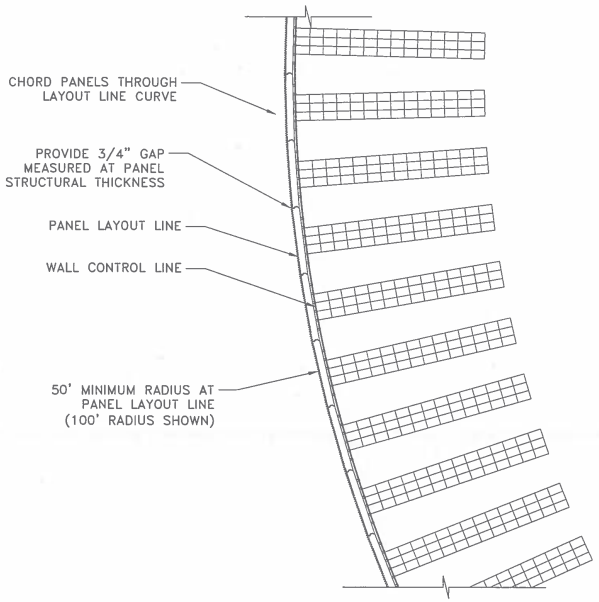

INSIDE RADIUS LAYOUT DETAIL

SCALE: NTS

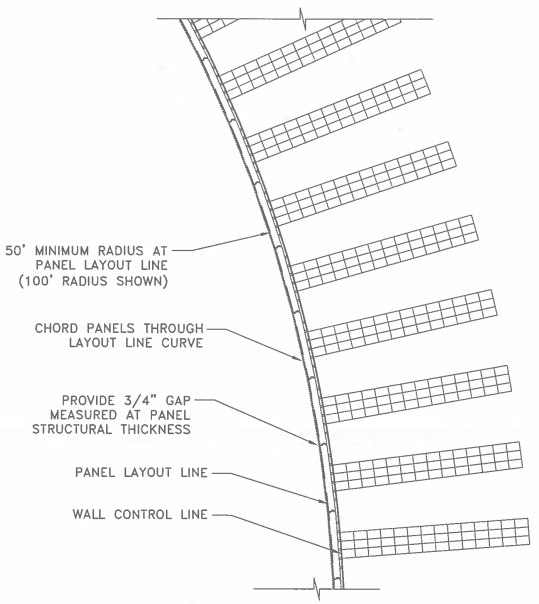

OUTSIDE RADIUS LAYOUT DETAIL

SCALE: NTS

CERTIFIED ONLY WITH RESPECT TO INTERNAL STABILITY OF REINFORCED EARTH STRUCTURES

DANIEL MITCHELL STATE OF WASHINGTON 47593 REGISTERED PROFESSIONAL ENGINEER 5/13/13

DANIEL S. MITCHELL
5/13/13

SPECIALIZING IN CONSTRUCTION PRODUCTS
SSL
MAIN OFFICE
4740 Scotts Valley Dr. Suite E Ph: 831-430-9300
Scotts Valley, California 95066 Fax: 831-430-9340

THIS DRAWING CONTAINS INFORMATION PROPRIETARY TO SSL AND IS FURNISHED FOR THE PROJECT SHOWN ONLY. THIS INFORMATION SHALL NOT BE TRANSMITTED TO ANY OTHER PERSON OR AGENCY WITHOUT WRITTEN CONSENT OF SSL.

THE DESIGN CONTAINED ON THESE DRAWINGS IS BASED ON INFORMATION PROVIDED BY THE OWNER. ON THE BASIS OF THIS INFORMATION, SSL HAS DESIGNED THE STRUCTURE(S) SHOWN AND IS RESPONSIBLE FOR INTERNAL STABILITY ONLY. THE OWNER REMAINS RESPONSIBLE FOR EXTERNAL STABILITY INCLUDING FOUNDATION (BEARING CAPACITY AND SETTLEMENT) AND SLOPE STABILITY (SLIDING AND ROTATION).

DRAWN BY: AJM 8/17/12					
CHECK BY:					
DESIGN BY:					
CHECK BY:					
PROJ. ENGR:	NO.	DATE	REVISION DESCRIPTION	BY	

CURVED LAYOUT LINE DETAILS

STATE OF WASHINGTON
DEPARTMENT OF TRANSPORTATION
SSL LLC. MSE PLUS
PANEL WALL SYSTEM

Scale: NTS
Job: ---
Sheet: DT-04
Sheet 04 of 10

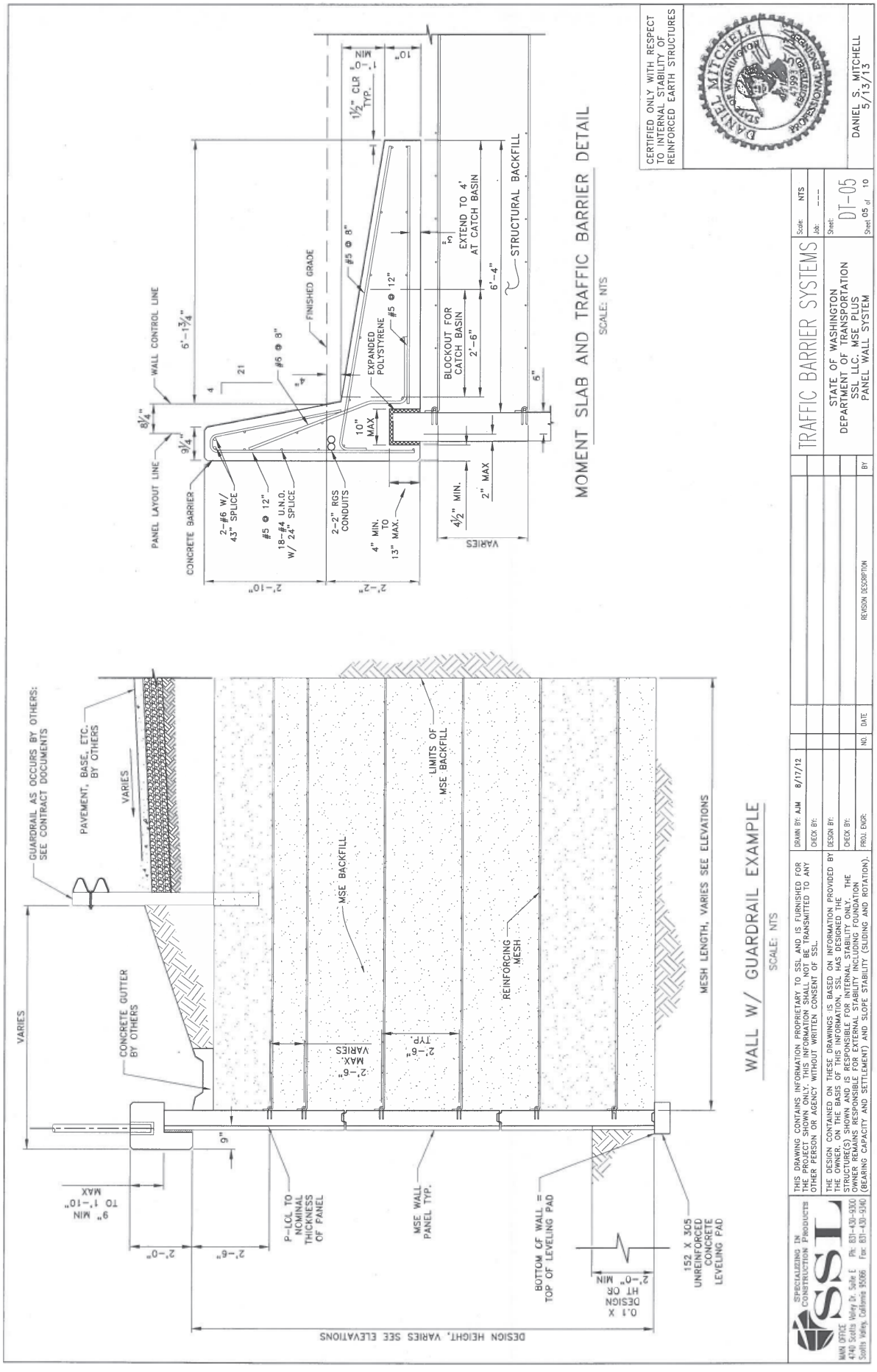
MOMENT SLAB AND TRAFFIC BARRIER DETAIL
SCALE: NTS
WALL W/ GUARDRAIL EXAMPLE
SCALE: NTS
TRAFFIC BARRIER SYSTEMS
STATE OF WASHINGTON
DEPARTMENT OF TRANSPORTATION
SSL LLC, MSE PLUS
PANEL WALL SYSTEM
DT-05
CERTIFIED ONLY WITH RESPECT TO INTERNAL STABILITY OF REINFORCED EARTH STRUCTURES
DANIEL S. MITCHELL
5/13/13
THIS DRAWING CONTAINS INFORMATION PROPRIETARY TO SSL AND IS FURNISHED FOR THE PROJECT SHOWN ONLY. THIS INFORMATION SHALL NOT BE TRANSMITTED TO ANY OTHER PERSON OR AGENCY WITHOUT WRITTEN CONSENT OF SSL.
THE DESIGN CONTAINED ON THESE DRAWINGS IS BASED ON INFORMATION PROVIDED BY THE OWNER, ON THE BASIS OF THIS INFORMATION, SSL HAS DESIGNED THE STRUCTURES SHOWN AND IS RESPONSIBLE FOR INTERNAL STABILITY ONLY. THE OWNER REMAINS RESPONSIBLE FOR EXTERNAL STABILITY, INCLUDING FOUNDATION (BEARING CAPACITY AND SETTLEMENT) AND SLOPE STABILITY (SLIDING AND ROTATION).
SPECIALIZING IN CONSTRUCTION PRODUCTS
SSL
MAIN OFFICE
4740 Scotts Valley Dr. Suite E
Scotts Valley, California 95066
Ph: 831-430-9300
Fax: 831-430-9340
DRAWN BY: AJM 8/17/12
CHECK BY:
DESIGN BY:
CHECK BY:
PROJ. ENGR:
NO. DATE REVISION DESCRIPTION BY
Scale: NTS
Job: ---
Sheet: 05 of 10

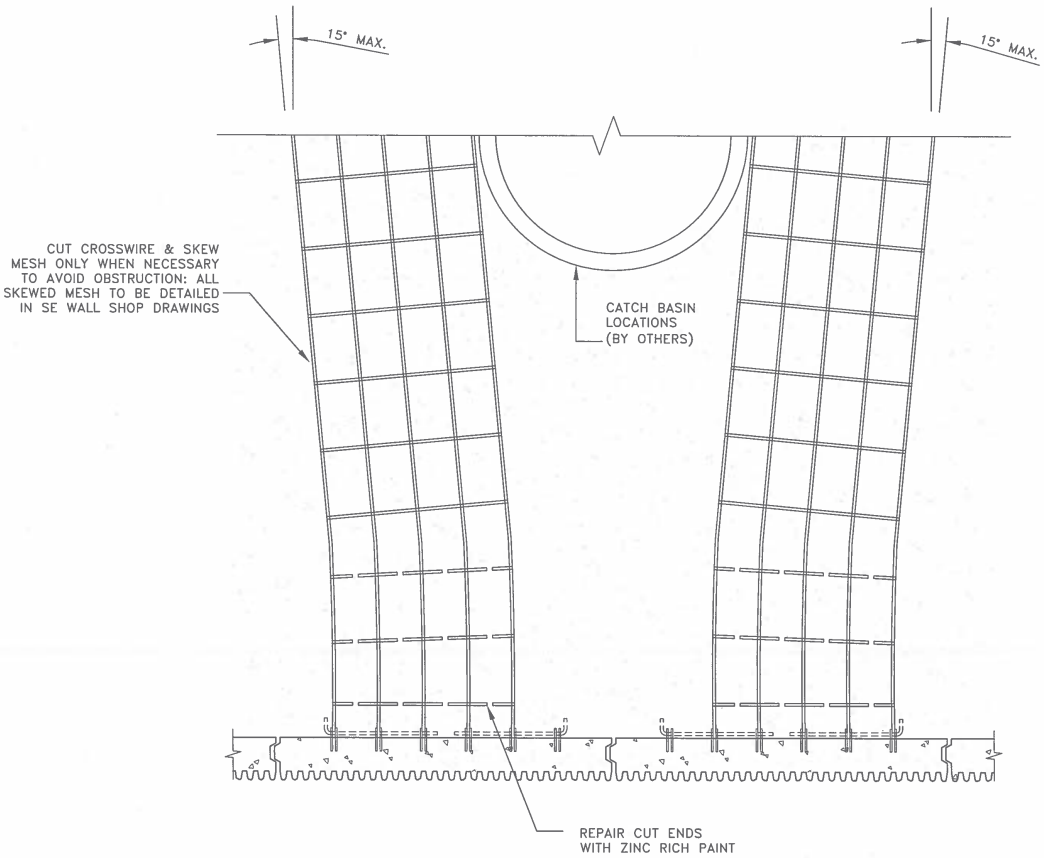

SOIL REINFORCEMENT CUT AND SKEW DETAIL

SCALE: NTS

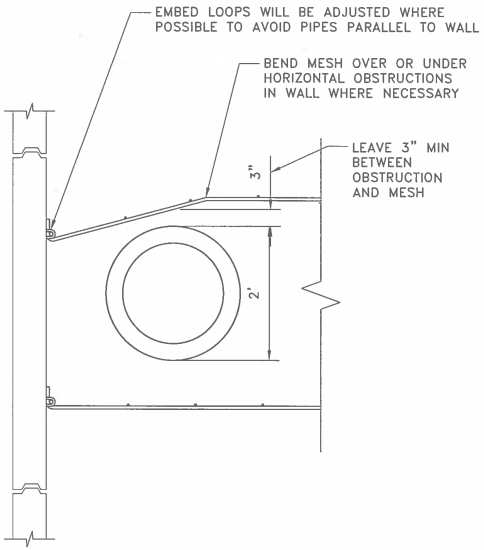

TYPICAL HORIZONTAL OBSTRUCTION DETAIL

SCALE: NTS

CERTIFIED ONLY WITH RESPECT TO INTERNAL STABILITY OF REINFORCED EARTH STRUCTURES



DANIEL S. MITCHELL
5/13/13

SPECIALIZING IN CONSTRUCTION PRODUCTS
SSL
MAIN OFFICE
4740 Scotts Valley Dr. Suite E Ph: 831-430-9300
Scotts Valley, California 95066 Fax: 831-430-9340

THIS DRAWING CONTAINS INFORMATION PROPRIETARY TO SSL AND IS FURNISHED FOR THE PROJECT SHOWN ONLY. THIS INFORMATION SHALL NOT BE TRANSMITTED TO ANY OTHER PERSON OR AGENCY WITHOUT WRITTEN CONSENT OF SSL.

THE DESIGN CONTAINED ON THESE DRAWINGS IS BASED ON INFORMATION PROVIDED BY THE OWNER. ON THE BASIS OF THIS INFORMATION, SSL HAS DESIGNED THE STRUCTURE(S) SHOWN AND IS RESPONSIBLE FOR INTERNAL STABILITY ONLY. THE OWNER REMAINS RESPONSIBLE FOR EXTERNAL STABILITY INCLUDING FOUNDATION (BEARING CAPACITY AND SETTLEMENT) AND SLOPE STABILITY (SLIDING AND ROTATION).

DRAWN BY: AJM 8/17/12					
CHECK BY:					
DESIGN BY:					
CHECK BY:					
PROJ. ENGR:	NO.	DATE	REVISION DESCRIPTION	BY	

OBSTRUCTION DETAILS

STATE OF WASHINGTON
DEPARTMENT OF TRANSPORTATION
SSL LLC. MSE PLUS
PANEL WALL SYSTEM

Scale: NTS
Job: ---
Sheet: DT-06
Sheet 06 of 10

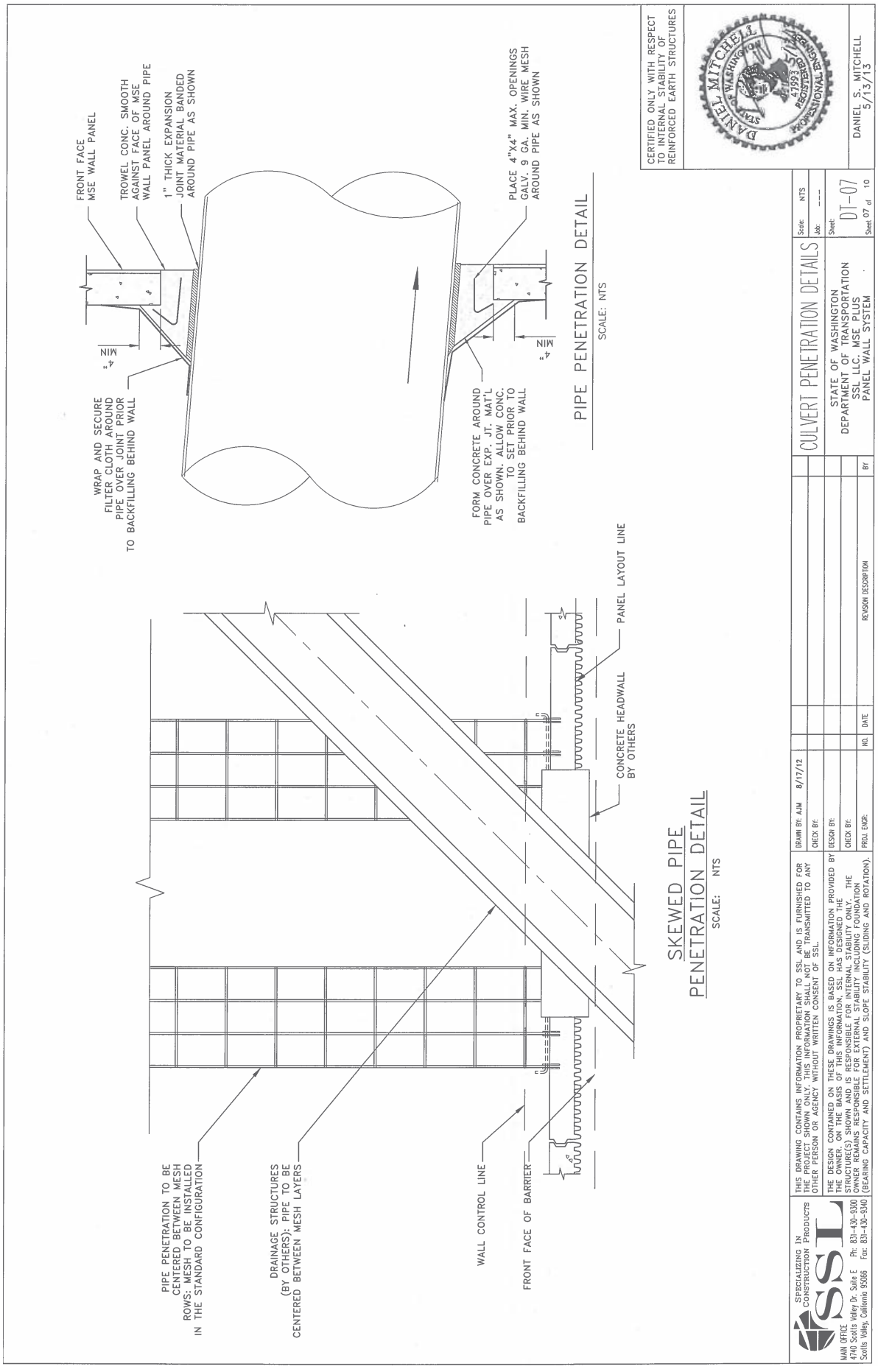
FRONT FACE
MSE WALL PANEL
TROWEL CONC. SMOOTH
AGAINST FACE OF MSE
WALL PANEL AROUND PIPE
1" THICK EXPANSION
JOINT MATERIAL BANDED
AROUND PIPE AS SHOWN
PLACE 4"X4" MAX. OPENINGS
GALV. 9 GA. MIN. WIRE MESH
AROUND PIPE AS SHOWN
WRAP AND SECURE
FILTER CLOTH AROUND
PIPE OVER JOINT PRIOR
TO BACKFILLING BEHIND WALL
FORM CONCRETE AROUND
PIPE OVER EXP. JT. MAT'L
AS SHOWN. ALLOW CONC.
TO SET PRIOR TO
BACKFILLING BEHIND WALL
4" MIN
4" MIN
PIPE PENETRATION DETAIL
SCALE: NTS
PANEL LAYOUT LINE
CONCRETE HEADWALL
BY OTHERS
PIPE PENETRATION TO BE
CENTERED BETWEEN MESH
ROWS: MESH TO BE INSTALLED
IN THE STANDARD CONFIGURATION
DRAINAGE STRUCTURES
(BY OTHERS); PIPE TO BE
CENTERED BETWEEN MESH LAYERS
WALL CONTROL LINE
FRONT FACE OF BARRIER
SKEWED PIPE
PENETRATION DETAIL
SCALE: NTS
CERTIFIED ONLY WITH RESPECT
TO INTERNAL STABILITY OF
REINFORCED EARTH STRUCTURES
DANIEL MITCHELL
WASHINGTON
47993
REGISTERED
PROFESSIONAL ENGINEER
DANIEL S. MITCHELL
5/13/13
CULVERT PENETRATION DETAILS
STATE OF WASHINGTON
DEPARTMENT OF TRANSPORTATION
SSL LLC. MSE PLUS
PANEL WALL SYSTEM
Scale: NTS
Job: ----
Sheet: DT-07
Sheet 07 of 10
SPECIALIZING IN CONSTRUCTION PRODUCTS
SSL
MAIN OFFICE
4740 Scotts Valley Dr. Suite E
Scotts Valley, California 95066
Ph: 831-430-9300
Fax: 831-430-9340
THIS DRAWING CONTAINS INFORMATION PROPRIETARY TO SSL AND IS FURNISHED FOR THE PROJECT SHOWN ONLY. THIS INFORMATION SHALL NOT BE TRANSMITTED TO ANY OTHER PERSON OR AGENCY WITHOUT WRITTEN CONSENT OF SSL.
THE DESIGN CONTAINED ON THESE DRAWINGS IS BASED ON INFORMATION PROVIDED BY THE OWNER. ON THE BASIS OF THIS INFORMATION, SSL HAS DESIGNED THE STRUCTURE(S) SHOWN AND IS RESPONSIBLE FOR INTERNAL STABILITY ONLY. THE OWNER REMAINS RESPONSIBLE FOR EXTERNAL STABILITY INCLUDING FOUNDATION BEARING CAPACITY AND SETTLEMENT) AND SLOPE STABILITY (SLIDING AND ROTATION).
DRAWN BY: AJM 8/17/12
CHECK BY:
DESIGN BY:
CHECK BY:
PROJ. ENGR:
NO. DATE REVISION DESCRIPTION BY

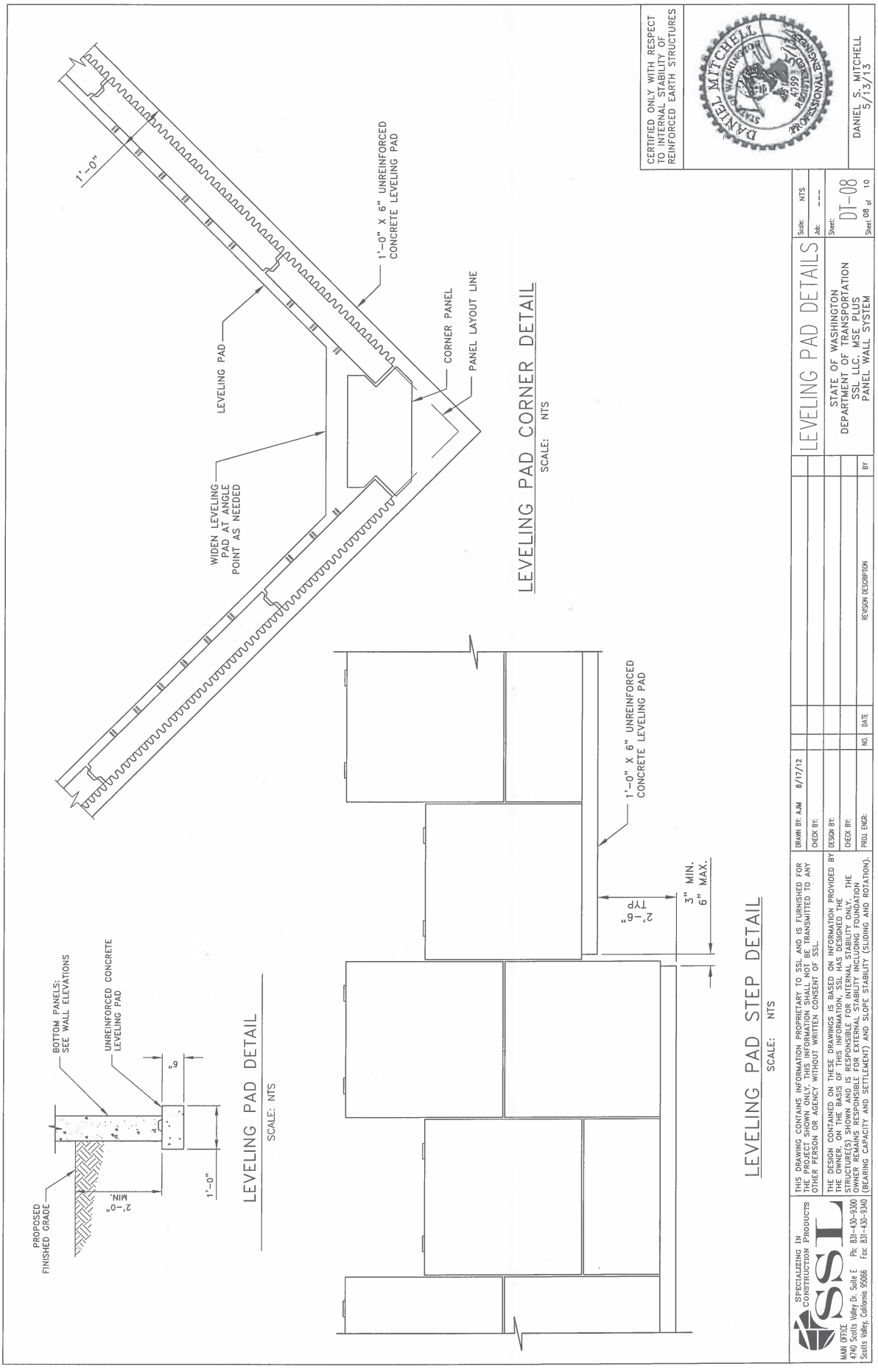
1'-0"
1'-0" X 6" UNREINFORCED CONCRETE LEVELING PAD
LEVELING PAD
CORNER PANEL
PANEL LAYOUT LINE
WIDEN LEVELING PAD AT ANGLE POINT AS NEEDED
LEVELING PAD CORNER DETAIL
SCALE: NTS
1'-0" X 6" UNREINFORCED CONCRETE LEVELING PAD
2'-6" TYP
3" MIN. 6" MAX.
LEVELING PAD STEP DETAIL
SCALE: NTS
BOTTOM PANELS; SEE WALL ELEVATIONS
UNREINFORCED CONCRETE LEVELING PAD
6"
PROPOSED FINISHED GRADE
2'-0" MIN.
1'-0"
LEVELING PAD DETAIL
SCALE: NTS
CERTIFIED ONLY WITH RESPECT TO INTERNAL STABILITY OF REINFORCED EARTH STRUCTURES
DANIEL S. MITCHELL
5/13/13
LEVELING PAD DETAILS
STATE OF WASHINGTON
DEPARTMENT OF TRANSPORTATION
SSL LLC: MSE PLUS
PANEL WALL SYSTEM
Scale: NTS
Job: ---
Sheet: DT-08
Sheet 08 of 10
SPECIALIZING IN CONSTRUCTION PRODUCTS
SSL
MAIN OFFICE
4740 Scotts Valley Dr. Suite E
Scotts Valley, California 95066
Ph: 831-430-9300
Fax: 831-430-9340
THIS DRAWING CONTAINS INFORMATION PROPRIETARY TO SSL AND IS FURNISHED FOR THE PROJECT SHOWN ONLY. THIS INFORMATION SHALL NOT BE TRANSMITTED TO ANY OTHER PERSON OR AGENCY WITHOUT WRITTEN CONSENT OF SSL.
THE DESIGN CONTAINED ON THESE DRAWINGS IS BASED ON INFORMATION PROVIDED BY THE OWNER. ON THE BASIS OF THIS INFORMATION, SSL HAS DESIGNED THE STRUCTURE(S) SHOWN AND IS RESPONSIBLE FOR INTERNAL STABILITY ONLY. THE OWNER REMAINS RESPONSIBLE FOR EXTERNAL STABILITY INCLUDING FOUNDATION (BEARING CAPACITY AND SETTLEMENT) AND SLOPE STABILITY (SLIDING AND ROTATION).
DRAWN BY: AJM 8/17/12
CHECK BY:
DESIGN BY:
CHECK BY:
PROJ. ENGR:
NO. DATE REVISION DESCRIPTION BY

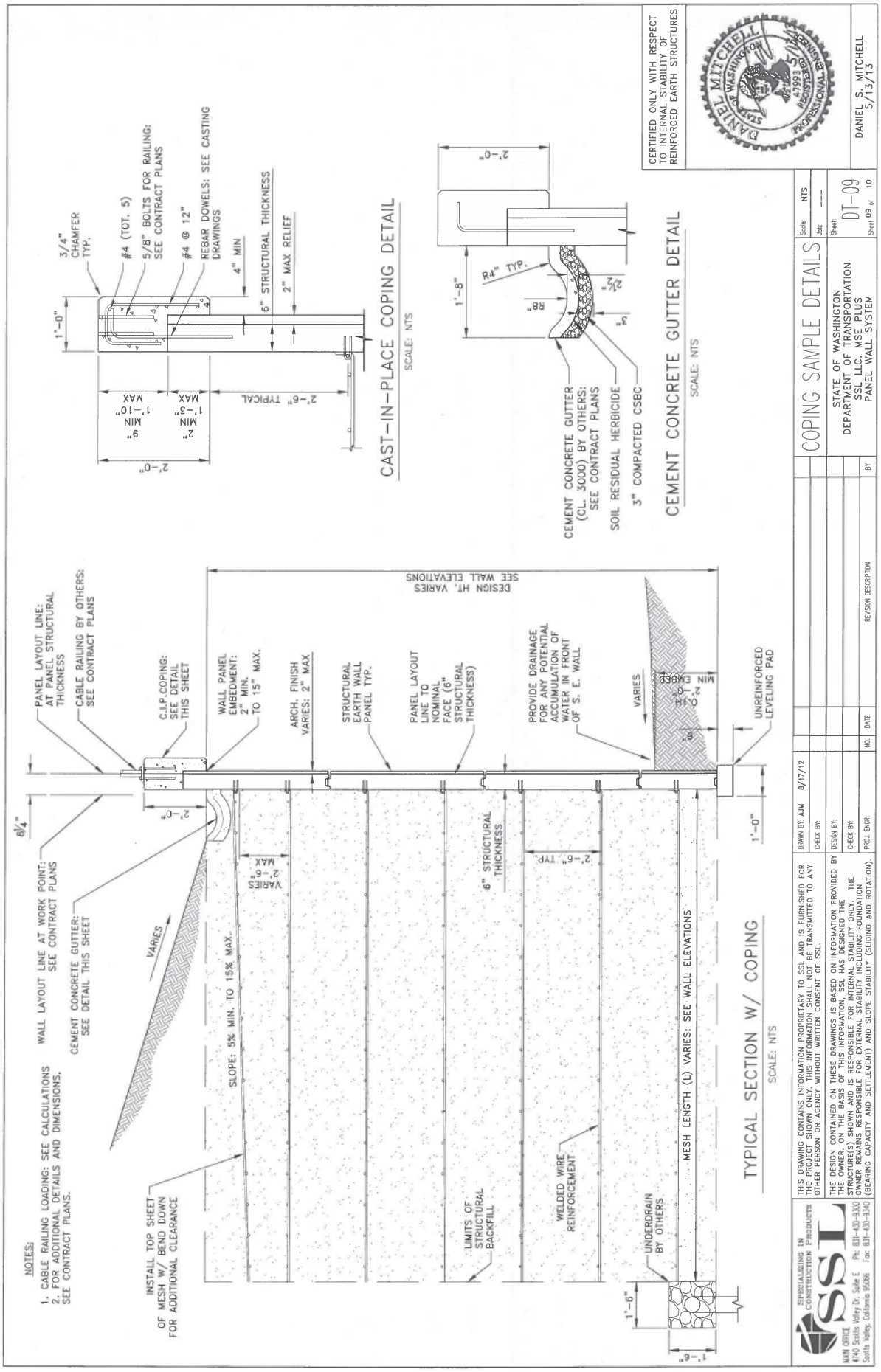
NOTES:
1. CABLE RAILING LOADING: SEE CALCULATIONS
2. FOR ADDITIONAL DETAILS AND DIMENSIONS, SEE CONTRACT PLANS.
TYPICAL SECTION W/ COPING
SCALE: NTS
CAST-IN-PLACE COPING DETAIL
SCALE: NTS
CEMENT CONCRETE GUTTER DETAIL
SCALE: NTS
COPING SAMPLE DETAILS
STATE OF WASHINGTON
DEPARTMENT OF TRANSPORTATION
SSL LLC. MSE PLUS
PANEL WALL SYSTEM
DT-09
DANIEL S. MITCHELL
5/13/13
CERTIFIED ONLY WITH RESPECT TO INTERNAL STABILITY OF REINFORCED EARTH STRUCTURES

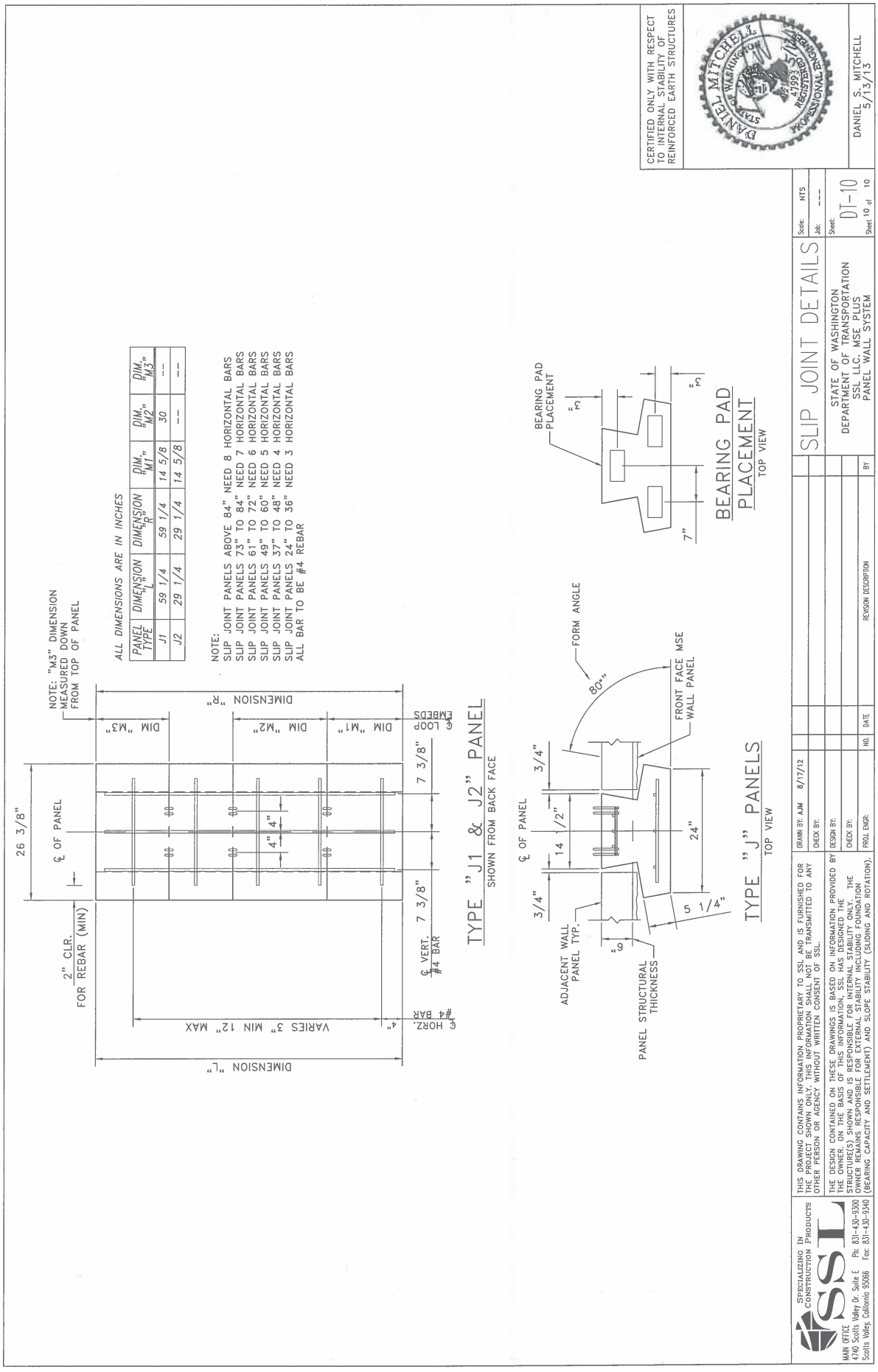
ALL DIMENSIONS ARE IN INCHES
PANEL TYPE | DIMENSION "L" | DIMENSION "R" | DIM. "M1" | DIM. "M2" | DIM. "M3"
J1 | 59 1/4 | 59 1/4 | 14 5/8 | 30 | --
J2 | 29 1/4 | 29 1/4 | 14 5/8 | -- | --
NOTE: "M3" DIMENSION MEASURED DOWN FROM TOP OF PANEL
NOTE:
SLIP JOINT PANELS ABOVE 84" NEED 8 HORIZONTAL BARS
SLIP JOINT PANELS 73" TO 84" NEED 7 HORIZONTAL BARS
SLIP JOINT PANELS 61" TO 72" NEED 6 HORIZONTAL BARS
SLIP JOINT PANELS 49" TO 60" NEED 5 HORIZONTAL BARS
SLIP JOINT PANELS 37" TO 48" NEED 4 HORIZONTAL BARS
SLIP JOINT PANELS 24" TO 36" NEED 3 HORIZONTAL BARS
ALL BAR TO BE #4 REBAR
TYPE "J1 & J2" PANEL
SHOWN FROM BACK FACE
TYPE "J" PANELS
TOP VIEW
BEARING PAD PLACEMENT
TOP VIEW
SLIP JOINT DETAILS
STATE OF WASHINGTON
DEPARTMENT OF TRANSPORTATION
SSL LLC. MSE PLUS
PANEL WALL SYSTEM
DT-10
DANIEL S. MITCHELL
5/13/13
CERTIFIED ONLY WITH RESPECT TO INTERNAL STABILITY OF REINFORCED EARTH STRUCTURES
SSL
SPECIALIZING IN CONSTRUCTION PRODUCTS
MAIN OFFICE
4740 Scotts Valley Dr. Suite E
Scotts Valley, California 95066
Ph: 831-439-9300
Fax: 831-439-9340
THIS DRAWING CONTAINS INFORMATION PROPRIETARY TO SSL AND IS FURNISHED FOR THE PROJECT SHOWN ONLY. THIS INFORMATION SHALL NOT BE TRANSMITTED TO ANY OTHER PERSON OR AGENCY WITHOUT WRITTEN CONSENT OF SSL.
THE DESIGN CONTAINED ON THESE DRAWINGS IS BASED ON INFORMATION PROVIDED BY THE OWNER. ON THE BASIS OF THIS INFORMATION, SSL HAS DESIGNED THE STRUCTURE(S) SHOWN AND IS RESPONSIBLE FOR INTERNAL STABILITY ONLY. THE OWNER REMAINS RESPONSIBLE FOR EXTERNAL STABILITY INCLUDING FOUNDATION (BEARING CAPACITY AND SETTLEMENT) AND SLOPE STABILITY (SLIDING AND ROTATION).
DRAWN BY: AJM 8/17/12
CHECK BY:
DESIGN BY:
CHECK BY:
PROJ. ENGR:
NO. DATE REVISION DESCRIPTION BY
Scale: NTS
Job: ---
Sheet: DT-10
Sheet 10 of 10

Appendix 15-O Preapproved Wall Appendix: Specific Requirements and Details for Landmark Reinforced Soil Wall

In addition to the general design requirements provided in Appendix 15-A, the following specific requirements apply:

Facing Blocks –Blocks acceptable for use are the Landmark tapered and straight blocks. These blocks can form facing batters of vertical (0 degrees) to 4 degrees. Considering the currently approved block dimensions, the maximum vertical spacing of reinforcement allowed to meet the requirements in the AASHTO Specifications is 2.5 feet.

Soil Reinforcement – Only geosynthetic reinforcement listed in the QPL and which has been evaluated for connection strength with the Landmark wall system shall be used. Therefore, the following specific QPL geosynthetic reinforcement products are approved for use with this wall system:

Miragrid 5XT
Miragrid 8XT
Miragrid 10XT

Reinforcement pullout shall be calculated based on the default values for geogrid reinforcement provided in the AASHTO Specifications.

Reinforcement/Facing Block Connection Requirements – The connection between Landmark facing units and the geosynthetic reinforcement is essentially a mechanical connection, with the possible exception of the connection when Miragrid 10XT is used. For mechanical connections, the connection resistance is generally not dependent on the normal force between blocks. The connection testing conducted for this wall system demonstrates that the connection is behaving as a mechanical connection for the Miragrid 5XT and 8XT. For the 10XT, the connection strength increases as normal stress increases. Therefore, it is likely that the connection with Miragrid 10XT is at least partially depending on frictional resistance. The design facing/reinforcement connection strength shall be as specified in the following table.

Table 15-O-1 Approved Connection Strength Design Values for Landmark Walls

Block	Geogrid Product	$T_{ultconn}$ (lbs/ft)	T_{lot} (lbs/ft)	CR_u	Creep Reduction Factor applicable to the Connection (use for RF_{CR} in Eq. 1)
Straight Block	Miragrid 5XT	2800+	3844	0.73	1.45*
	Miragrid 8XT	4000	6564	0.61	1.45*
	Miragrid 10XT	3948+N*Tan 16°	9456	$T_{ultconn}/9456$	1.2
Tapered Block	Miragrid 5XT	2837 – N*Tan7°	3844	$T_{ultconn}/3844$	1.45*
	Miragrid 8XT	4250 – N*Tan5°	6564	$T_{ultconn}/6564$	1.45*
	Miragrid 10XT	3770+N*Tan 30° to N = 2850 lbs/ft, and 5400 lbs/ft at N > 2850 lbs/ft	9456	$T_{ultconn}/9456$	1.2

N = normal load at reinforcement layer at facing, in lbs/ft of width parallel to face.

+This is a lower bound value – see connection test results in report by Bathurst, Clarabut Geotechnical Testing, Inc., Project report No. BCGT9930, 9/1/2000.

*Same as the value of RFCR reported in the QPL, Appendix D for these geogrid products.

T_{ac}, the long-term connection strength, shall be calculated as follows:

$$T_{ac} \times \frac{T_{MARV} \times CR_U}{RF_{CR} \times RF_D}$$

where,

T_{MARV} = the minimum average roll value for the ultimate geosynthetic strength T_{ult},
CR_u = the ultimate connection strength $T_{ultconn}$ divided by the lot specific ultimate tensile strength, T_{lot} (i.e., the lot of material specific to the connection testing),
RF_{CR} = creep reduction factor for the geosynthetic, and
RF_D = the durability reduction factor for the geosynthetic.

RF_{CR} and RF_D shall be as provided in the QPL, Appendix D, except as noted in the previous table. Regarding the Miragrid 10XT, the sustained load test results indicate that the connection resistance reduction due to creep is not as large as for the other two Miragrid products, likely due to the fact that at least some of the connection resistance is frictional in nature rather than fully mechanical. Therefore, the lower creep reduction factor for the Miragrid 10XT is acceptable.

It is noted in ASTM C1372 that a dimensional tolerance for the height of the block of ⅛ inch is allowed, but that Section 15.5.3.8 recommends a tighter dimensional tolerance of 1⁄16 inch. Based on WSDOT experience, for walls greater than 25 feet in height, some cracking of facing blocks due to differential vertical stresses tends to occur in the bottom portion of the wall. Therefore, blocks placed at depths below the wall top of 25 feet or more should be cast to a vertical dimensional tolerance of 1⁄16 inch to reduce the risk of significant cracking of facing blocks.

Approved details for the Landmark wall system are provided in the following plan sheets. Exceptions and additional requirements regarding these approved details are as follows:

- In plan sheet 5 of 6, the guard rail detail, the guard rail post shall either be installed through precut holes in the geogrid layers that must penetrated, or the geogrid layers shall be cut in a manner that prevents ripping or tearing of the geogrid.
- In plan sheet 3 of 6, regarding the geogrid at wall corner detail, cords in the wall facing alignment to form an angle point or a radius shall be no shorter than the width of the roll to insure good contact between the connectors and the geogrid cross-bar throughout the width of the geogrid. Alternatively, the geogrid roll could be cut longitudinally in half to allow a tighter radius, if necessary.

® & ™ ANCHOR WALL SYSTEMS, INC

PROPOSED SEGMENTAL RETAINING WALL PLANS FOR:

PROJECT NAME (1)
PROJECT NAME (2)
CITY, WASHINGTON

PART 1 GENERAL

1.01 SUMMARY

A. Section Includes
Work includes furnishing and installing Anchor Landmark modular retaining wall units to the lines and grades designated on the construction drawings and as specified herein.

1.02 REFERENCES

A. American Society of Testing and Materials
1. ASTM C 140 Standard Test Methods of Sampling and Testing Concrete Masonry Units
2. ASTM D 448 Standard Classification for Sizes of Aggregate for Road and Bridge Construction
3. ASTM C 698 Standard Test Methods for Moisture-Density Relations of Soils and Soil-Aggregate Mixtures Using 5.5-lb Rammer and 12-in. Drop, (Standard Proctor)
4. ASTM C 1262 Standard Test Method for Evaluating the Freeze-Thaw Durability of Manufactured Concrete Masonry Units and Related Concrete Units
5. ASTM C 1372 Standard Specification for Segmental Retaining Wall Units
6. ASTM D 1556 Standard Test Method for Density of Soil In Place by the Sand Cone Method
7. ASTM D 1557 Standard Test Methods for Moisture-Density Relations of Soils and Soil-Aggregate Mixtures Using 10-lb Rammer and 18-in. Drop, (Modified Proctor)
8. ASTM D 2488 Standard Practice for Description and Identification of Soils, Visual-Manual Procedure (USCS Unified Soil Classification System)
9. ASTM D 2922 Standard Test Method for Density of Soil and Soil-Aggregate In Place by Nuclear Methods (Shallow Depth)
10. ASTM D 4354 Practice for Sampling of Geosynthetics for Testing
11. ASTM D 4595 Test Method for Tensile Properties of Geosynthetics by the Wide Width Strip Method
12. ASTM D 4759 Practice for Determining Specification Conformance of Geosynthetics
13. ASTM D 4873 Standard Guide for Identification, Storage and Handling of Geotextiles
14. ASTM D 5262 Creep Limited Strength of Geosynthetics

B. American Association of State Highway Officials
1. AASHTO M 288 Standard Specification for Geotextile Specification for Highway Applications
2. AASHTO M 278 Standard Specification for Class PS46 Polyvinyl Chloride (PVC) Pipe
3. AASHTO M 304 Standard Specification for Poly (Vinyl Chloride) (PVC) Profile Wall Drain Pipe and Fittings Based on Controlled Inside Diameter
4. AASHTO LRFD Bridge Design Specifications, 4th Ed., 2007

C. Geosynthetic Research Institute
1. GRI GG4; Allowable Design Strength of Geosynthetics

D. WSDOT Standard Plans and Special Provisions

1.03 SUBMITTALS

A. Submit the following in accordance with Section _____:
1. Manufacturer's literature: Materials description
2. Shop drawings: Retaining wall system design, including wall heights, geosynthetic reinforcement layout, drainage provisions and other pertinent details. The shop drawings shall be signed by a registered professional engineer licensed in the state of wall installation.
3. Certificate of Compliance letter in accordance with Section _____ (Earth Retaining Structures, Proprietary Earth Retaining Systems) and Section _____ of the Standard Specifications
4. Design calculations demonstrating satisfaction safety factors for
   1) Overall stability
   2) Internal stability
   3) Bearing capacity
   4) Sliding

1.04 DELIVERY, STORAGE AND HANDLING

A. The contractor shall check the materials upon delivery to assure that proper material has been received.
B. Deliver and handle materials in such a manner as to prevent damage. Store above ground on wood pallets or blocking. Remove damaged or otherwise unsuitable material, when so determined, from the site.
C. The contractor shall prevent excessive mud, wet cement, epoxy and like material, from coming in contact with the modular units and reinforcement.
D. Geosynthetic materials shall remain in protective wrapping until placed in the wall. Follow manufacturer's recommendations regarding protection from direct sunlight.
E. Lock bar material shall remain in boxes until placed in the modular units. Lock bar exposed to direct sunlight for a period exceeding 2 months should not be used in the constructed wall.

1.05 DEFINITIONS

A. Geosynthetic Reinforcement is a material specifically fabricated for use as soil reinforcement.
B. Landmark modular retaining wall units are machine made from portland cement, water, mineral aggregates and potentially fly ash and various admixtures.
C. Permeable Material is a free draining material used as a drainage media.
D. Reinforced Backfill Soil is the soil used as fill within the geosynthetic reinforced soil mass.
E. Foundation Soil is the soil mass supporting the leveling pad and reinforced soil zone of the modular retaining wall system.
F. Wall Subdrain is a perforated PVC pipe, generally of 4 inch (100 mm) diameter, used to drain water from soil.
G. Filter Fabric is a non-woven geosynthetic material used for filtration and to allow for the long term passage of water into a subsurface drain system while retaining the in situ soil.
H. The Landmark Lock Bar is a specifically manufactured polymer based material, supplied by Anchor, and used to mechanically connect the reinforcement products to the Landmark units.

1.06 DISCREPANCIES

Should discrepancies exist between the plans and specifications, plans shall take precedence over the specifications.

CERTIFICATE OF AUTHORIZATION: 2535

DESIGN ENGINEER:	WASHINGTON REGISTRATION:
DEAN SANDRI	47447

© 2011 ANCHOR WALL ENGINEERING, LLC

ANCHOR™
BUILD SOMETHING BEAUTIFUL
5959 BAKER ROAD, SUITE 390
MINNETONKA, MN 55345-5973
PHONE: (952) 933-8854
FAX: (952) 979-8454
WWW.ANCHORWALL.COM

Scale: NOT TO SCALE

0 1
VERIFY THAT THE BAR ABOVE IS 1". IF NOT, ADJUST THE SCALE ACCORDINGLY.

PROPOSED SEGMENTAL RETAINING WALLS
0 & 4 DEGREE BATTERED ANCHOR LANDMARK WALL SYSTEM
WSDOT SUBMITTAL DETAILS

Proj. No:		Reviewed by:	AWE
Date:	04/20/11	Drawn By:	AWE

REVISION DATES (SEE SHEET W1 FOR REVISION HISTORY):

GENERAL NOTES

Sheet W1 of 10

PART 2 PRODUCTS

2.01 MATERIALS

A. Modular Block Facing Unit: "Landmark" as manufactured under license from Anchor Wall Systems. No substitutions allowed. Landmark units shall meet requirements of ASTM C1372 except as modified by FHWA NHI-00-043, section 8.10.
   1. Unit height dimensions shall not vary more than +/-1/16 inch (1.6mm) from that specified.
   2. Unit length dimensions shall not vary more than +/-1/8 inch (3.2mm) from that specified.
   3. Minimum required compressive strength shall be 4,000 psi (28Mpa).
   4. Maximum water absorption shall be 5%.
   5. Color: _____. Submit a block sample for approval by the resident engineer.
   6. Texture: Offset Split Face.
   7. The concrete units shall include an integral concrete shear flange connection/location device.
B. Geosynthetic reinforcement: Mirafi Miragrid 5XT, 8XT & 10XT. No substitutions allowed.
C. Connectors: The Landmark lock bar as supplied by Anchor Wall Systems shall be manufactured from CPVC and PVC to the dimensions shown on the plans.
D. Permeable material: Shall conform to the provisions in Section ____ (Earth Retaining Structures) of the Special Provisions for Permeable Materials
E. Reinforced Backfill Soil: Shall conform to the provisions in Section ____ (Earth Retaining Structures) of the Special Provisions for Structure Backfill
F. Wall subdrain: Shall conform to the provisions in Section ____ "Underdrains" of the Standard Specifications and the Special Provisions for this project.
G. Filter fabric: Shall conform to the provisions in Section ____ "Filter Fabric" of the Standard Specifications and the Special Provisions for this project.
H. Leveling Pad: A leveling pad of unreinforced concrete shall be placed to facilitate first course placement. Concrete leveling pads shall have a minimum thickness of 6 inches (150mm) and a minimum width of 24 inches (600mm) and shall have a minimum 28 day compressive strength of 3,000 psi (20.7 Mpa).

PART 3 EXECUTION

3.01 EXAMINATION

A. The contractor shall examine the areas and conditions under which the retaining wall is to be erected and notify the owners representative in writing of conditions detrimental to the proper and timely completion of the work. Contractor shall not proceed with the work until unsatisfactory conditions have been corrected. The contractor shall promptly notify the wall design engineer and owners representative of site condition which may affect wall performance or may require a reevaluation of the wall design.
B. Foundation soil and any cut banks shall be examined by the project geotechnical engineer or technician to ensure that the actual retained and foundation soil strengths, meets or exceeds the strength required, as shown on the construction drawings. Examine cut banks for perched or other water seepage.

3.02 EXCAVATION

A. The contractor shall excavate to the lines and grades shown on the construction drawings. Over-excavation not approved by the owner or owner's representative shall not be paid for and replacement with approved compacted fill and/or wall system components will be required at the Contractor's expense. Do not disturb base beyond the lines shown on the plans.

3.03 FOUNDATION PREPARATION

A. Foundation soil shall be excavated as required for the base reinforcement dimension shown on the construction drawings, or as directed by the engineer.
B. The project geotechnical engineer shall examine the foundation and retained soils to ensure that the soil strength and type meets or exceeds that required, as shown on the construction drawings. Foundation soil not meeting the strength required for bearing capacity or settlement, shall be remediated per the direction of the engineer.

3.04 BASE COURSE PREPARATION

A. Leveling pad materials shall be placed as shown on the construction drawings on the pre-approved foundation soils.
B. Leveling pad materials shall be installed upon undisturbed soils, or foundation soils prepared in accordance with Section 3.03.
C. Concrete leveling pads shall be allowed to cure for 12 hours prior to placement of the first course of modular units.
D. Leveling pad materials shall be prepared to provide intimate contact with the modular wall units.
E. Leveling pad materials shall be to the depths and widths shown on the plans.

3.05 WALL ERECTION

A. Foundation units shall be placed on the prepared leveling pad. Units shall be checked for horizontal alignment with a string line placed at the back of the units and vertical alignment front to back and side to side with a level. The top of all units in the base course shall be at the same elevation.
B. Ensure that concrete wall units are in full contact with base. A 1 inch (25 mm) gap between foundations units is allowed, provided a suitable filter fabric is placed behind the foundation units.
C. The foundation course of modular units shall be backfilled and compacted, front and back, then checked for level and alignment prior to placing the next course of wall units.
D. Wall subdrain shall be installed at the lowest elevation possible to maintain gravity flow of water to outside of the reinforced zone. The wall subdrain shall be day-lighted to an appropriate location away from the wall system at each low point and at 50-foot (15 m) intervals along the wall.
E. Remove all excess fill from top of units and from the lock bar channel in the top of the units and install next course.
F. Subsequent courses of modular units shall be placed side by side for full length of wall alignment. A maximum gap of 1/8 inch (3.2 mm) is allowed between units. Alignment should be checked by using a string line at the back of the units. Adjust units as necessary to maintain horizontal alignment.
G. If required, a minimum of 12 inches (300 mm) of angular permeable material shall be placed behind the modular units.
H. A filter fabric may be required between the permeable material and reinforced soil fill depending on the compatibility of the permeable material and reinforced soil zone materials.
I. Ensure permeable material and backfill are compacted before installation of each succeeding course.
J. Install each succeeding course. Backfill as each course is completed and prior to placement of the next course. Pull the units forward until the locating surface of the unit contacts the locating surface of the units in the preceding course.
K. Check unit vertical alignment with a level on each course, adjust units as necessary with reinforcement shims to maintain proper alignment and setback control.
L. Permeable material or reinforced soil fill must be placed level with the top of the modular units at courses where reinforcement is required.
M. Remove all excess fill from top of units and from the lock bar channel in the top of the units prior to reinforcement placement.
N. Install geosynthetic reinforcement at locations and elevations shown on the design drawings.
   1. The geosynthetic reinforcement has a primary strength direction. The primary strength direction must be placed perpendicular to the wall face.
   2. Reinforcement panels shall be continuous. Seams or connections are not permitted. Adjacent panels shall be abutted with less than 4 inch gap between adjacent panels. 100 percent reinforcement coverage is required.
   3. Panels of geosynthetic reinforcement shall be tensioned such that all folds and wrinkles are removed before reinforced soil is placed. Panels shall be staked or anchored as necessary to maintain taut condition.
   4. Tracked vehicles may not operate on geosynthetic reinforcement with less than 6 inches of compacted soil between the reinforcement and the tracks. Turning of tracked vehicles should be kept to a minimum to prevent damage and disturbance to the reinforcement.
   5. Rubber-tired vehicles may operate directly on geosynthetic reinforcement at speeds less than 10 mph if permitted by the reinforcement manufacturer. Sudden braking and turning shall be avoided.
O. The Landmark lock bar shall be placed at each geosynthetic elevation. Lock bar is not required on courses where geosynthetic reinforcement is not placed. Gaps between adjacent sections of lock bar shall be no greater than 3 inches (75 mm). The lock bar shall be placed flat side up, with the angled side to the back of the unit, as shown on the construction drawings. The reinforcement must be maintained within 1" (25 mm) of the face of the smaller Landmark units below.

CERTIFICATE OF AUTHORIZATION: 2535

DESIGN ENGINEER:	WASHINGTON REGISTRATION:
DEAN SANDRI	47447

ANCHOR™ BUILD SOMETHING BEAUTIFUL
5959 BAKER ROAD, SUITE 390
MINNETONKA, MN 55345-5973
PHONE: (952) 933-8854
FAX: (952) 979-8454
WWW.ANCHORWALL.COM

Scale: NOT TO SCALE

0 1
VERIFY THAT THE BAR ABOVE IS 1". IF NOT, ADJUST THE SCALE ACCORDINGLY.

PROPOSED SEGMENTAL RETAINING WALLS
0 & 4 DEGREE BATTERED ANCHOR LANDMARK WALL SYSTEM
WSDOT SUBMITTAL DETAILS

Proj. No:		Reviewed by:	AWE	REVISION DATES (SEE SHEET W1 FOR REVISION HISTORY):	GENERAL NOTES	Sheet	W2	of	10
Date:	04/20/11	Drawn By:	AWE						

® & ™ ANCHOR WALL SYSTEMS, INC
© 2011 ANCHOR WALL ENGINEERING, LLC

® & ™ ANCHOR WALL SYSTEMS, INC

3.06 BACKFILL PLACEMENT

A. Special care shall be taken during compaction below the first reinforcement layer to maintain unit level and alignment.
B. At each level of soil reinforcement the backfill material shall be roughly level to an elevation approximately 1" (30mm) above the level of the facing unit before placing the soil reinforcement.
C. Clean any debris off the top of the units and from within the channel in the top of the units and ensure the backfill is graded reasonably flat prior to reinforcement placement.
D. The reinforcement has a primary strength direction, which must be laid perpendicular to the wall face.
E. Prior to placement of backfill and after placement of the lock bar, pull the reinforcement taut and anchor in place with stakes, staples or fill piles at the back of the reinforcement.
F. Place the reinforced backfill onto the reinforcement and spread in a direction parallel to the wall face. Reinforced backfill shall be placed, spread and compacted in a manner that will minimize slack or wrinkles from forming in the reinforcement.
G. Place a minimum of 6" (150mm) of backfill prior to operating equipment above the reinforcement. Avoid sudden braking or turning on fill placed over the reinforcement.
H. Fill in the reinforced soil zone shall be placed and compacted in lifts not to exceed 6 to 8 inches (150 to 200 mm) in loose thickness where hand operated compaction equipment is used, and not exceeding 12 inches (300 mm) in loose thickness where heavy, self-propelled compaction equipment is used.
I. Only lightweight, hand-operated, compaction equipment shall be allowed within 3 feet (0.9 m) of the back of the Landmark units.
J. All fill placed in the reinforced zone must be compacted in accordance with the project specifications and the project engineer.
K. Compaction tests shall be taken in the reinforced soil zone. A minimum frequency of one test within the reinforced soil zone per every 5 feet (1.5 m) of wall height for every 100 ft (30 m) of wall is recommended.
L. Prior to periods of construction inactivity, the reinforced backfill should be graded to drain away from the wall face. Trenches or berms may be needed to control surface drainage in the vicinity of the retained cut slope, reinforced backfill or wall toe area.

3.07 CAP UNIT INSTALLATION (Where required)

A. Brush clean the top of the upper course of units. Place cap units, cutting as necessary on curved wall portions, prior to adhering the cap units.
B. Mortar is the preferred material to adhere the cap units to the upper course of modular units.
C. Apply mortar or an exterior concrete construction adhesive to the top surface of the upper course of units, and place the cap unit into desired position. If mortar is used, place mortar into the channel in the top course of units as well as on the upper surfaces.
D. Use a string line to maintain proper cap alignment.
E. Backfill and compact to finish grade, after mortar or adhesive has set.

3.08 ADJUSTING AND CLEANING

A. Damaged units should be replaced with new units during construction.
B. Contractor shall remove debris caused by construction and leave adjacent areas clean.

3.09 QUALITY CONTROL

A. The wall installation contractor is responsible for the proper installation of all materials. A qualified independent third party shall be enlisted to verify the correct installation of all materials according to these specifications and the construction drawings.
B. Work found to be deficient according to these specifications or the construction drawings must be corrected.
C. The retaining wall will not be considered complete until accepted by the engineer or duly appointed owner's representative.

PART 4 DESIGN PARAMETERS

4.01 SOIL PARAMETERS FROM GENERAL NOTES ON WSDOT PLAN SHEET RW-____

A. Reinforced/Backfill Soil: Angle of Internal Friction = 34-degrees, Unit Weight = 120 pcf
B. Retained Soil: Angle of Internal Friction = 30-degrees, Unit Weight = 120 pcf
C. Designed in accordance with
   1. AASHTO LRFD Bridge Design Specifications, 4th Ed., 2007

General Note: _____ will be supplying the retaining wall blocks and lock bar for use with other accessory materials to be used in the construction of walls detailed herein. The Landmark Wall System being provided for this project will have an offset split texture for the facing. Construction and quality control procedures provided by Anchor Wall Systems and its licensees are intended to provide a general explanation of the system. It is the contractor's obligation to unload and store the products delivered to the site, devise and execute a project specific erection sequence, and implement a fall protection system where required. Construction and installation processes and procedures provided by Anchor Wall Systems and its licensees are general in nature and do not account for project specific criteria. Compliance with the guidelines in such documents does not relieve the contractor of its responsibility to adhere to the project plans, specifications and contract documents or compliance with all fall protection, safety laws, standards, and procedures at the jobsite.

END OF SECTION

CERTIFICATE OF AUTHORIZATION: 2535

DESIGN ENGINEER:	WASHINGTON REGISTRATION:
DEAN SANDRI	47447

© 2011 ANCHOR WALL ENGINEERING, LLC

ANCHOR™
BUILD SOMETHING BEAUTIFUL
5959 BAKER ROAD, SUITE 390
MINNETONKA, MN 55345-5973
PHONE: (952) 933-8854
FAX: (952) 979-8454
WWW.ANCHORWALL.COM

Scale: NOT TO SCALE	0 — 1 VERIFY THAT THE BAR ABOVE IS 1". IF NOT, ADJUST THE SCALE ACCORDINGLY.	PROPOSED SEGMENTAL RETAINING WALLS 0 & 4 DEGREE BATTERED ANCHOR LANDMARK WALL SYSTEM WSDOT SUBMITTAL DETAILS	
Proj. No:	Reviewed by: AWE	REVISION DATES (SEE SHEET W1 FOR REVISION HISTORY):	Sheet W3 of 10
Date: 04/20/11	Drawn By: AWE		GENERAL NOTES

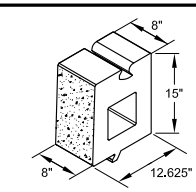

STRAIGHT UNIT - LARGE

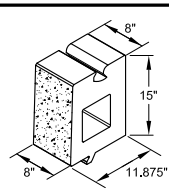

STRAIGHT UNIT - SMALL

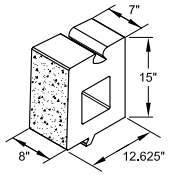

TAPERED UNIT - LARGE

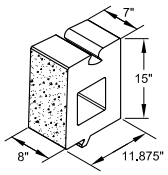

TAPERED UNIT - SMALL

X / WX ISOMETRIC VIEWS - FULL SIZE UNITS (NOT TO SCALE)

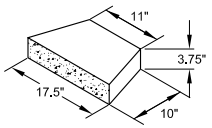

CAP UNIT

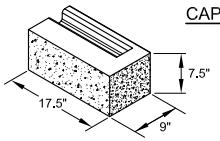

LEFT CORNER UNIT

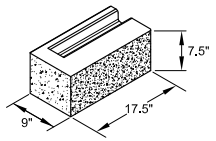

RIGHT CORNER UNIT

X / WX ISOMETRIC VIEWS - MISCELLANEOUS UNITS (NOT TO SCALE)

CERTIFICATE OF AUTHORIZATION: 2535

DESIGN ENGINEER:	WASHINGTON REGISTRATION:
DEAN SANDRI	47447

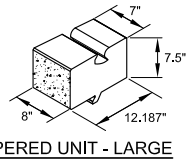

TAPERED UNIT - LARGE

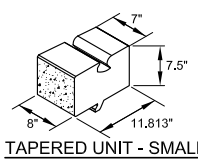

TAPERED UNIT - SMALL

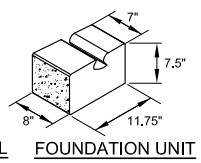

FOUNDATION UNIT

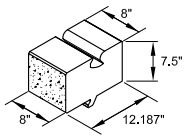

STRAIGHT UNIT - LARGE

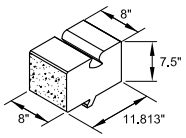

STRAIGHT UNIT - SMALL

X / WX ISOMETRIC VIEWS - HALF SIZE UNITS (NOT TO SCALE)

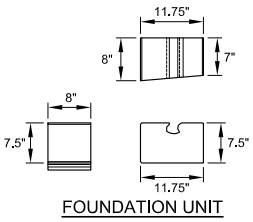

FOUNDATION UNIT

NOTE: LANDMARK UNITS CAN BE MANUFACTURED IN EITHER VERTICAL OR 4 DEGREE BATTER CONFIGURATION. BATTER IS ACHIEVED BY MINOR POSITIONAL CHANGE IN CHANNEL/PRESSER FOOT LOCATION. ENSURE THAT PRODUCT BEING INSTALLED IS EITHER 4 DEGREE OR VERTICAL PRODUCT.

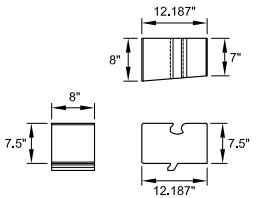

TAPERED UNIT - LARGE

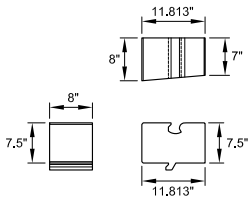

TAPERED UNIT - SMALL

X / WX 3-WAY BLOCK VIEWS - HALF SIZE UNITS (NOT TO SCALE)

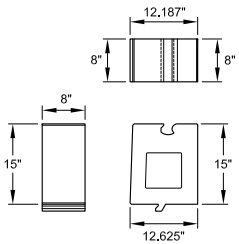

STRAIGHT UNIT - LARGE

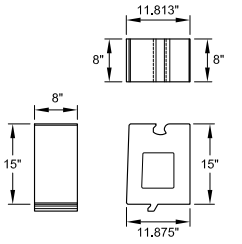

STRAIGHT UNIT - SMALL

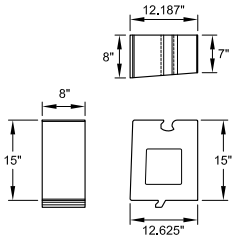

TAPERED UNIT - LARGE

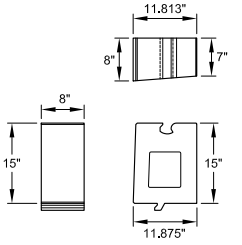

TAPERED UNIT - SMALL

X / WX 3-WAY BLOCK VIEWS - FULL SIZE UNITS (NOT TO SCALE)

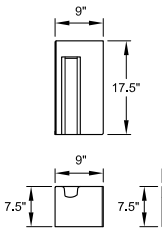

RIGHT CORNER

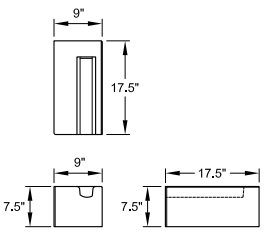

LEFT CORNER

X / WX 3-WAY BLOCK VIEWS - CORNER UNITS (NOT TO SCALE)

ANCHOR™
BUILD SOMETHING BEAUTIFUL
5959 BAKER ROAD, SUITE 390
MINNETONKA, MN 55345-5973
PHONE: (952) 933-8854
FAX: (952) 979-8454
WWW.ANCHORWALL.COM

Scale:			
3/16" = 1'-0"	0 — 1 VERIFY THAT THE BAR ABOVE IS 1". IF NOT, ADJUST THE SCALE ACCORDINGLY.		
Proj. No:		Reviewed by:	AWE
Date:	04/20/11	Drawn By:	AWE

PROPOSED SEGMENTAL RETAINING WALLS
0 & 4 DEGREE BATTERED ANCHOR LANDMARK WALL SYSTEM
WSDOT SUBMITTAL DETAILS

REVISION DATES (SEE SHEET W1 FOR REVISION HISTORY):

TYPICAL DETAILS

Sheet W4 of 10

® & ™ ANCHOR WALL SYSTEMS, INC
© 2011 ANCHOR WALL ENGINEERING, LLC

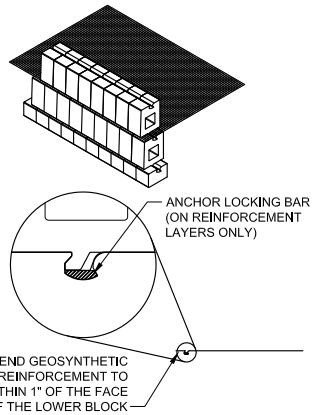

X / WX REINFORCEMENT CONNECTION (NOT TO SCALE)

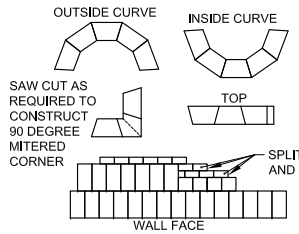

1. ALWAYS START CAPPING WALL FROM THE LOWEST ELEVATION.
2. LAYOUT CAPS PRIOR TO USING ADHESIVE.
3. CUT CAPS TO FIT. VARIOUS COMBINATIONS OF LONG AND SHORT CAP FACES WILL BE NECESSARY FOR RADII GREATER THAN THE MINIMUM.
4. ALTERNATE SHORT AND LONG CAP FACES EVERY OTHER CAP TO ACHIEVE A STRAIGHT ROW OF CAPS.
5. USE EXTERIOR-GRADE CONSTRUCTION ADHESIVE TO SECURE CAPS.
6. REFER TO DETAIL X ON SHEET WX FOR ADDITIONAL INFORMATION.

X / WX CAP BLOCK DESIGN DETAILS (NOT TO SCALE)

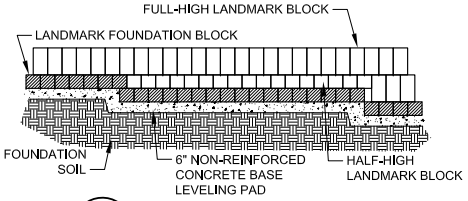

X / WX TYPICAL STEP-UP DETAIL (NOT TO SCALE)

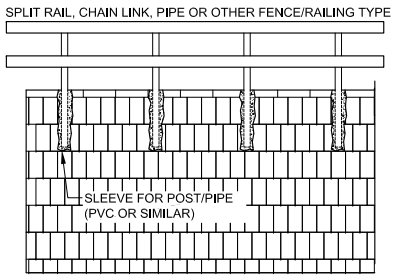

X / WX WALL FACE WITH RAILING/FENCE (NOT TO SCALE)

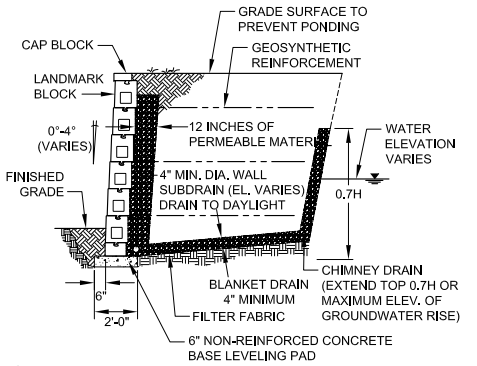

X / WX POTENTIAL GROUNDWATER BEHIND WALL (NOT TO SCALE)

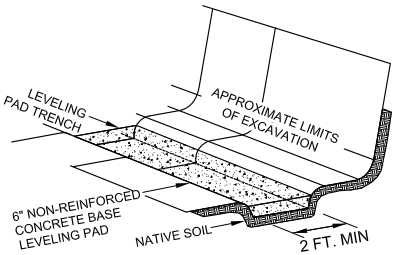

X / WX TYPICAL BASE PREPARATION (NOT TO SCALE)

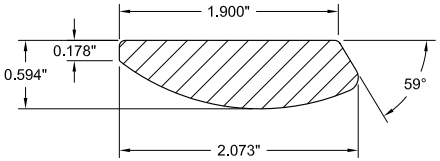

X / WX LANDMARK LOCK BAR (NOT TO SCALE)

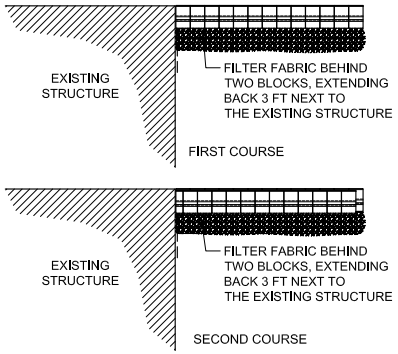

X / WX WALL ABUTTING EXISTING STRUCTURE (NOT TO SCALE)

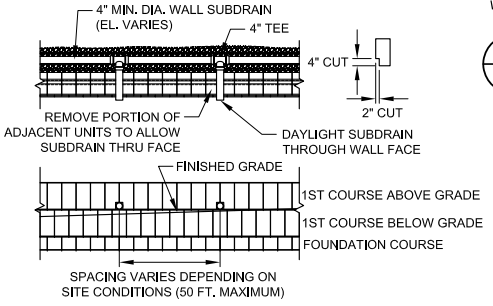

X / WX DAYLIGHT DRAINTILE THROUGH WALL (NOT TO SCALE)

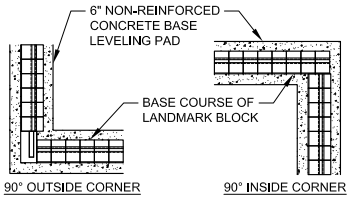

X / WX 90° CORNERS - LEVELING PAD (NOT TO SCALE)

CERTIFICATE OF AUTHORIZATION: 2535

DESIGN ENGINEER:	WASHINGTON REGISTRATION:
DEAN SANDRI	47447

ANCHOR™
BUILD SOMETHING BEAUTIFUL
5959 BAKER ROAD, SUITE 390
MINNETONKA, MN 55345-5973
PHONE: (952) 933-8854
FAX: (952) 979-8454
WWW.ANCHORWALL.COM

Scale: 3/16" = 1'-0"

0 1
VERIFY THAT THE BAR ABOVE IS 1". IF NOT, ADJUST THE SCALE ACCORDINGLY.

PROPOSED SEGMENTAL RETAINING WALLS
0 & 4 DEGREE BATTERED ANCHOR LANDMARK WALL SYSTEM
WSDOT SUBMITTAL DETAILS

Proj. No:		Reviewed by:	AWE	REVISION DATES (SEE SHEET W1 FOR REVISION HISTORY):	TYPICAL DETAILS	Sheet W5	of 10
Date:	04/20/11	Drawn By:	AWE				

® & ™ ANCHOR WALL SYSTEMS, INC
© 2011 ANCHOR WALL ENGINEERING, LLC

NOTE:
IN THE "CROSS-OVER AREA" OF REINFORCEMENT, ONE OF THE LAYERS OF REINFORCEMENT SHOULD BE LOWERED OR RAISED ON COURSE TO ALLOW PLACEMENT OF THE REINFORCEMENT WITH THE PRINCIPLE REINFORCEMENT STRENGTH DIRECTION PROPERLY ORIENTATED. THE REINFORCEMENT SHOULD NOT EXTEND INTO THE SEGMENTAL RETAINING WALL UNITS ON THE RETURN LEG OF THE 90-DEGREE CORNER.

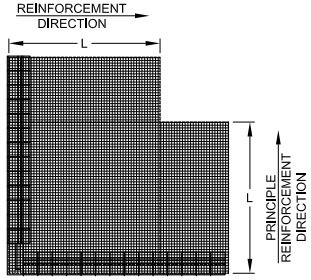

X / WX 90-DEGREE OUTSIDE CORNER W/ GRID (NOT TO SCALE)

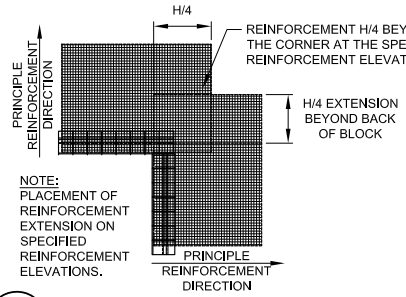

X / WX 90-DEGREE INSIDE CORNER W/ GRID (NOT TO SCALE)

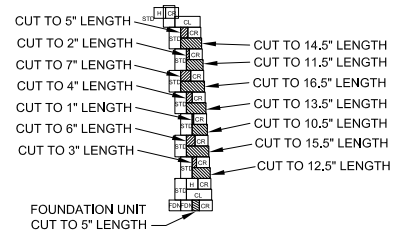

DETAIL KEY:
STD= FULL SIZE STANDARD UNIT
CL= FULL SIZE LEFT CORNER UNIT
FDN= FULL SIZE FOUNDATION UNIT
CR= END VIEW OF RIGHT CORNER UNIT
H= FULL SIZE HALF HIGH UNIT
CUT HALF HIGH UNIT
CUT LEFT CORNER UNIT

LEFT CORNER

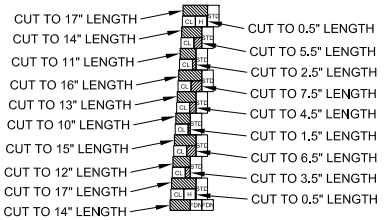

NOTE: PATTERN REPEATS EVERY 10-FOOT VERTICAL INTERVAL

DETAIL KEY:
STD= FULL SIZE STANDARD UNIT
H= FULL SIZE HALF HIGH UNIT
FDN= FULL SIZE FOUNDATION UNIT
CL= END VIEW OF LEFT CORNER UNIT
CUT HALF HIGH UNIT
CUT RIGHT CORNER UNIT

RIGHT CORNER

X / WX 90° OUTSIDE CORNERS WITH CORNER UNIT (NOT TO SCALE)

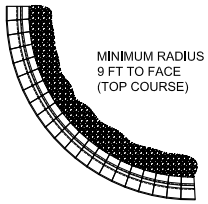

X / WX OUTSIDE CURVE (NOT TO SCALE)

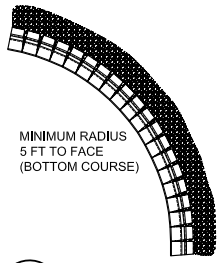

X / WX INSIDE CURVE (NOT TO SCALE)

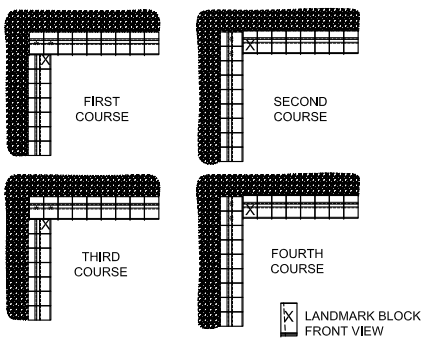

NOTES: REMOVE LOWER LOCK FLANGES FROM UNITS MARKED WITH (*) AND USE ADHESIVE TO ATTACH TO BLOCKS BELOW.

CUT UNITS MARKED WITH (X) TO MAINTAIN RUNNING BOND, AS SHOWN TO THE RIGHT.

X / WX 90-DEGREE INSIDE CORNERS (NOT TO SCALE)

PLACE ADDITIONAL REINFORCEMENT ON THE NEXT COURSE OF SEGMENTAL UNITS IMMEDIATELY ABOVE THE SPECIFIED PLACEMENT ELEVATION IN A MANNER THAT ELIMINATES GAPS LEFT BY THE PREVIOUS LAYER OF GEOSYNTHETIC AT THE SPECIFIED REINFORCEMENT ELEVATION.

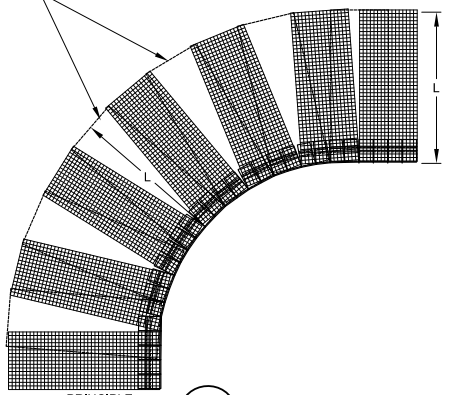

X / WX INSIDE CURVE W/ GRID (NOT TO SCALE)

STEP 1 - PLACE REINFORCEMENT SO LITTLE OR NO OVERLAP OCCURS IN THE RADIUS AREA. IF OVERLAP OCCURS, PLACE 2 TO 3 INCHES OF SOIL FILL BETWEEN THE REINFORCEMENT LAYERS.

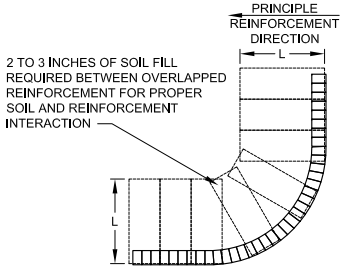

STEP 2 - LAY THE NEXT COURSE OF BLOCK. MAKE A MARK ON THE BACK OF THE BLOCKS IN THE AREAS THAT ARE NOT REINFORCED. BACKFILL AND COMPACT THAT COURSE.

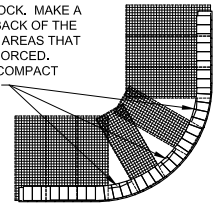

STEP 3 - PLACE REINFORCEMENT IN THE AREAS WHERE THE MARKS SHOW GAPS IN THE LOWER REINFORCEMENT PATTERN. CONTINUE NORMAL WALL CONSTRUCTION, REPEATING THESE STEPS AS NEEDED.

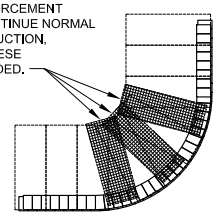

NOTE: OUTLINE OF BLOCK ONLY SHOWN FOR CLARITY

X / WX OUTSIDE CURVE W/ GRID (NOT TO SCALE)

CERTIFICATE OF AUTHORIZATION: 2535

DESIGN ENGINEER:	WASHINGTON REGISTRATION:
DEAN SANDRI	47447

ANCHOR™ BUILD SOMETHING BEAUTIFUL
5959 BAKER ROAD, SUITE 390
MINNETONKA, MN 55345-5973
PHONE: (952) 933-8854
FAX: (952) 979-8454
WWW.ANCHORWALL.COM

Scale: 3/16" = 1'-0"

VERIFY THAT THE BAR ABOVE IS 1". IF NOT, ADJUST THE SCALE ACCORDINGLY.

PROPOSED SEGMENTAL RETAINING WALLS
0 & 4 DEGREE BATTERED ANCHOR LANDMARK WALL SYSTEM
WSDOT SUBMITTAL DETAILS

Proj. No:		Reviewed by:	AWE
Date:	04/20/11	Drawn By:	AWE

REVISION DATES (SEE SHEET W1 FOR REVISION HISTORY):

TYPICAL DETAILS

Sheet W6 of 10

® & ™ ANCHOR WALL SYSTEMS, INC
© 2011 ANCHOR WALL ENGINEERING, LLC

® & ™ ANCHOR WALL SYSTEMS, INC

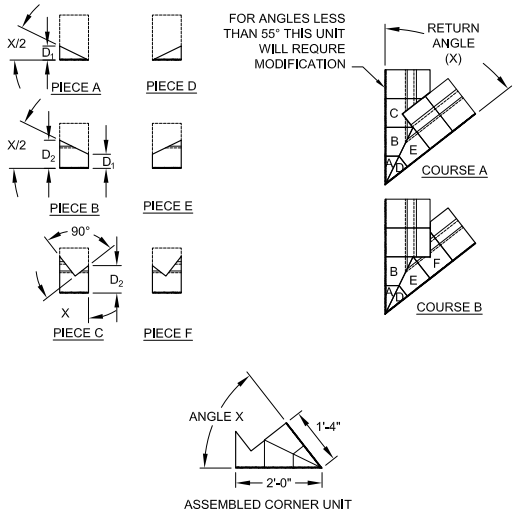

NOTES:
1. CREATE PIECE A BY MEASURING 1/2 THE RETURN ANGLE (X) FROM THE CORNER OF THE BLOCK. THE FLAT DISTANCE FROM THE CORNER IS DISTANCE D_1.
2. CREATE PIECE B BY MEASURING DISTANCE D_1 FROM THE CORNER AND CUTTING 1/2 ANGLE X. THE FLAT SIDE FROM THE CORNER IS DISTANCE D_2
3. CREATE PIECE C BY MEASURING DISTANCE D_2 FROM THE CORNER AND CUTTING ANGLE X TOWARD THE FACE OF THE BLOCK. MARK AND CUT AN ANGLE 90° TO THAT CUT.
4. PIECE D IS THE MIRROR OF PIECE A
5. PIECE E IS THE MIRROR OF PIECE B
6. PIECE F IS THE MIRROR OR PIECE C
7. AFFIX PIECES A, B, C, D, & E WITH CONSTRUCTION GRADE ADHESIVE
8. ALTERNATE COURSES A & B UNTIL FULL HEIGHT OF CORNER HAS BEEN REACHED.

X / WX ACUTE OUTSIDE CORNER (NOT TO SCALE)

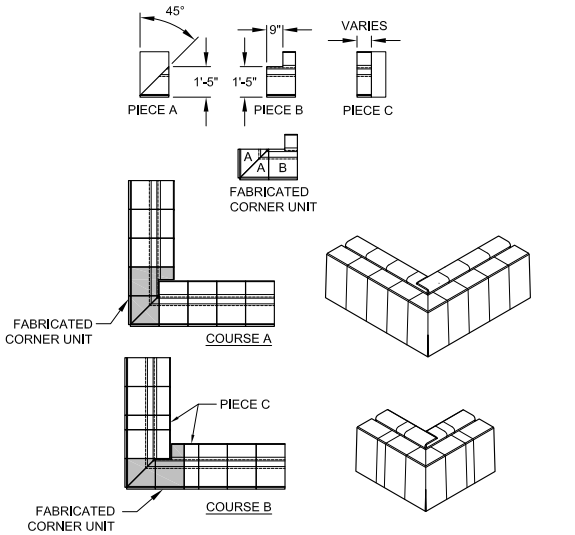

NOTES:
1. AFFIX PIECE A (X2) AND PIECE B WITH CONSTRUCTION GRADE ADHESIVE
2. CUT PIECE C TO FIT AS NEEDED TO MAINTAIN RUNNING BOND
3. ALTERNATE COURSES A AND B UNTIL FULL HEIGHT OF CORNER HAS BEEN REACHED.

X / WX 90° OUTSIDE CORNER W/OUT CORNER UNIT (NOT TO SCALE)

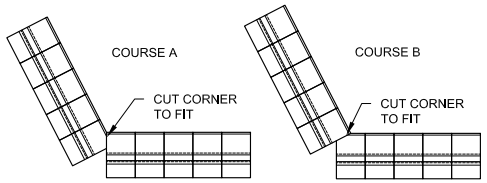

NOTE:
1. ALTERNATE COURSES A AND B UNTIL FULL HEIGHT OF CORNER HAS BEEN REACHED.

X / WX OBTUSE INSIDE CORNER (NOT TO SCALE)

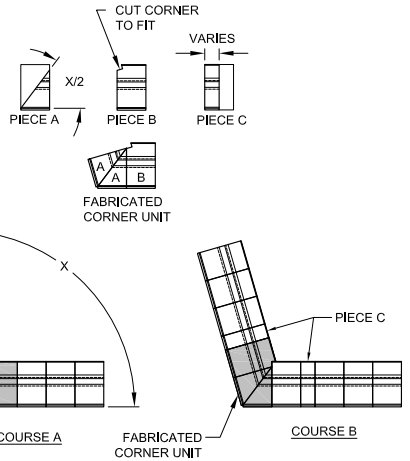

NOTES:
1. AFFIX PIECE A (X2) AND PIECE B WITH CONSTRUCTION GRADE ADHESIVE
2. CUT PIECE C TO FIT AS NEEDED TO MAINTAIN RUNNING BOND
3. ALTERNATE COURSES A AND B UNTIL FULL HEIGHT OF CORNER HAS BEEN REACHED.

X / WX OBTUSE OUTSIDE CORNER (NOT TO SCALE)

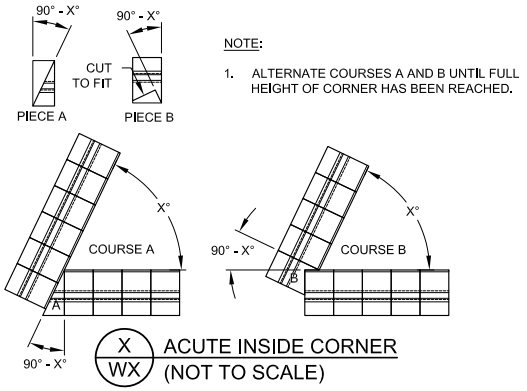

NOTE:
1. ALTERNATE COURSES A AND B UNTIL FULL HEIGHT OF CORNER HAS BEEN REACHED.

X / WX ACUTE INSIDE CORNER (NOT TO SCALE)

CERTIFICATE OF AUTHORIZATION: 2535

DESIGN ENGINEER:	WASHINGTON REGISTRATION:
DEAN SANDRI	47447

ANCHOR™
BUILD SOMETHING BEAUTIFUL
5959 BAKER ROAD, SUITE 390
MINNETONKA, MN 55345-5973
PHONE: (952) 933-8854
FAX: (952) 979-8454
WWW.ANCHORWALL.COM

Scale: 3/16" = 1'-0"

0 1
VERIFY THAT THE BAR ABOVE IS 1". IF NOT, ADJUST THE SCALE ACCORDINGLY.

PROPOSED SEGMENTAL RETAINING WALLS
0 & 4 DEGREE BATTERED ANCHOR LANDMARK WALL SYSTEM
WSDOT SUBMITTAL DETAILS

Proj. No:		Reviewed by:	AWE
Date:	04/20/11	Drawn By:	AWE

REVISION DATES (SEE SHEET W1 FOR REVISION HISTORY):

TYPICAL DETAILS

Sheet W7 of 10

© 2011 ANCHOR WALL ENGINEERING, LLC

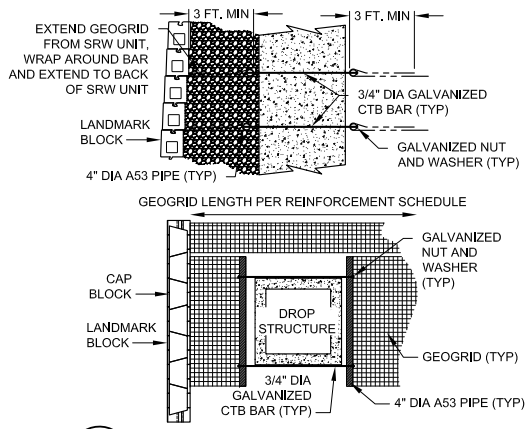

X / WX DROP STRUCTURE IN REINFORCED ZONE (NOT TO SCALE)

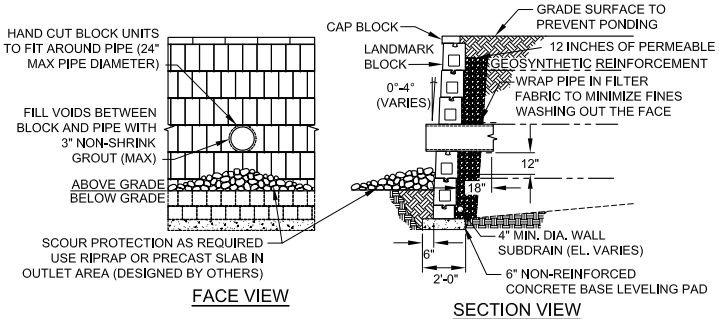

X / WX SMALL DIAMETER PIPE PENETRATION (NOT TO SCALE)

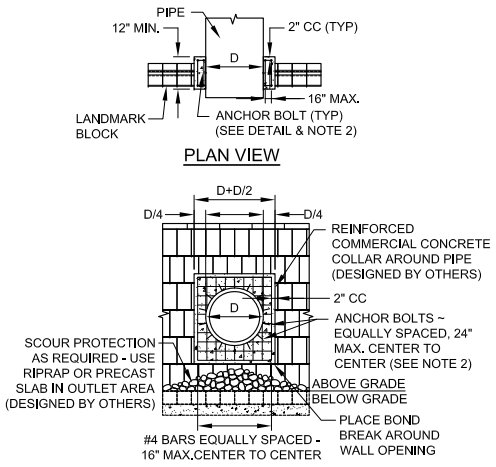

NOTES:
1. REINFORCING STEEL SHALL HAVE 1 1/2" MIN. CLEAR COVER TO ALL CONCRETE SURFACES.
2. REINFORCED CONCRETE COLLAR FOR CONCRETE PIPE MAY OMIT ANCHOR BOLT ATTACHMENT (SEE WASHINGTON DOT DETAIL B75.20-01-E FOR MORE INFO)
3. MINIMUM THICKNESS FOR REINFORCED CONCRETE COLLAR SHALL BE EQUAL TO OR GREATER THAN THE BLOCK DEPTH PLUS THE BATTER OVER THE HEIGHT OF THE REINFORCED CONCRETE COLLAR.

X / WX LARGE DIAMETER PIPE PENETRATION (NOT TO SCALE)

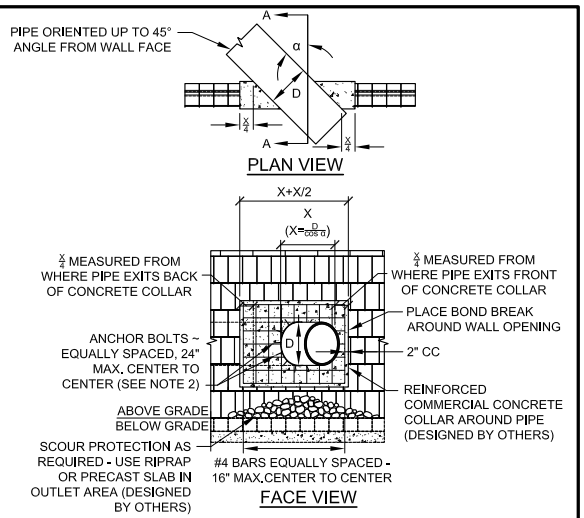

NOTES:
1. REINFORCING STEEL SHALL HAVE 1 1/2" MIN. CLEAR COVER TO ALL CONCRETE SURFACES.
2. REINFORCED CONCRETE COLLAR FOR CONCRETE PIPE MAY OMIT ANCHOR BOLT ATTACHMENT (SEE WASHINGTON DOT DETAIL B75.20-01-E FOR MORE INFO)
3. MINIMUM THICKNESS FOR REINFORCED CONCRETE COLLAR SHALL BE EQUAL TO OR GREATER THAN THE BLOCK DEPTH PLUS THE BATTER OVER THE HEIGHT OF THE REINFORCED CONCRETE COLLAR.

X / WX PIPE THRU WALL @ ANGLE (NOT TO SCALE)

CERTIFICATE OF AUTHORIZATION: 2535

DESIGN ENGINEER:	WASHINGTON REGISTRATION:
DEAN SANDRI	47447

ANCHOR™ BUILD SOMETHING BEAUTIFUL
5959 BAKER ROAD, SUITE 390
MINNETONKA, MN 55345-5973
PHONE: (952) 933-8854
FAX: (952) 979-8454
WWW.ANCHORWALL.COM

Scale: 3/16" = 1'-0"

VERIFY THAT THE BAR ABOVE IS 1". IF NOT, ADJUST THE SCALE ACCORDINGLY.

PROPOSED SEGMENTAL RETAINING WALLS
0 & 4 DEGREE BATTERED ANCHOR LANDMARK WALL SYSTEM
WSDOT SUBMITTAL DETAILS

Proj. No:		Reviewed by:	AWE
Date:	04/20/11	Drawn By:	AWE

REVISION DATES (SEE SHEET W1 FOR REVISION HISTORY):

TYPICAL DETAILS

Sheet W8 of 10

® & ™ ANCHOR WALL SYSTEMS, INC
© 2011 ANCHOR WALL ENGINEERING, LLC

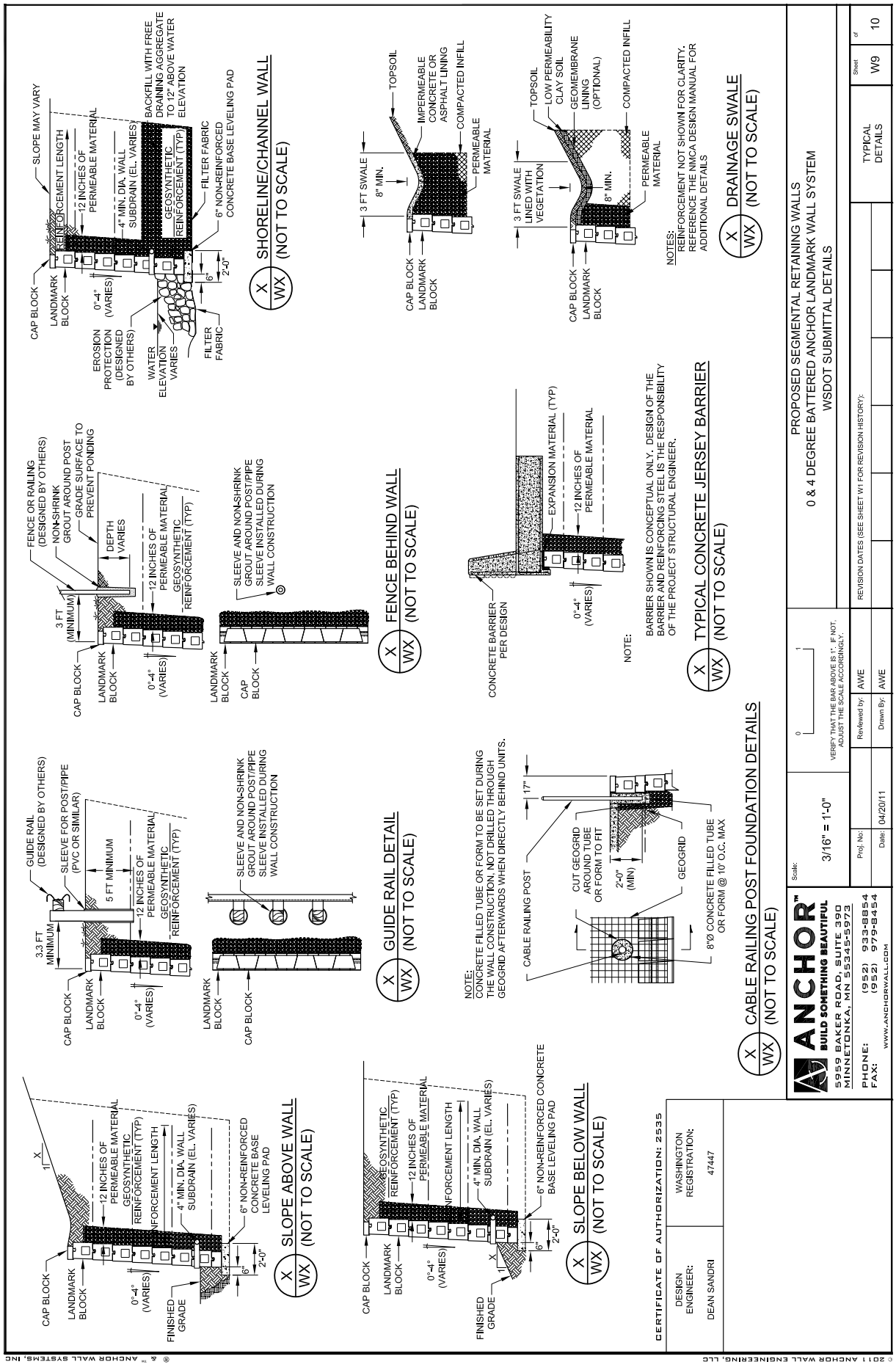
SLOPE MAY VARY
CAP BLOCK
LANDMARK BLOCK
REINFORCEMENT LENGTH
12 INCHES OF PERMEABLE MATERIAL
4" MIN. DIA. WALL SUBDRAIN (EL. VARIES)
BACKFILL WITH FREE DRAINING AGGREGATE TO 12" ABOVE WATER ELEVATION
GEOSYNTHETIC REINFORCEMENT (TYP)
FILTER FABRIC
6" NON-REINFORCED CONCRETE BASE LEVELING PAD
0'-4" (VARIES)
EROSION PROTECTION (DESIGNED BY OTHERS)
WATER ELEVATION VARIES
FILTER FABRIC
6"
2'-0"
X/WX SHORELINE/CHANNEL WALL (NOT TO SCALE)
3 FT SWALE
8" MIN.
TOPSOIL
IMPERMEABLE CONCRETE OR ASPHALT LINING
COMPACTED INFILL
PERMEABLE MATERIAL
CAP BLOCK
LANDMARK BLOCK
3 FT SWALE LINED WITH VEGETATION
TOPSOIL
LOW PERMEABILITY CLAY SOIL
GEOMEMBRANE LINING (OPTIONAL)
COMPACTED INFILL
PERMEABLE MATERIAL
8" MIN.
NOTES:
REINFORCEMENT NOT SHOWN FOR CLARITY. REFERENCE THE NMCA DESIGN MANUAL FOR ADDITIONAL DETAILS
X/WX DRAINAGE SWALE (NOT TO SCALE)
FENCE OR RAILING (DESIGNED BY OTHERS)
NON-SHRINK GROUT AROUND POST
GRADE SURFACE TO PREVENT PONDING
3 FT (MINIMUM)
DEPTH VARIES
12 INCHES OF PERMEABLE MATERIAL
GEOSYNTHETIC REINFORCEMENT (TYP)
0'-4" (VARIES)
SLEEVE AND NON-SHRINK GROUT AROUND POST/PIPE
SLEEVE INSTALLED DURING WALL CONSTRUCTION
X/WX FENCE BEHIND WALL (NOT TO SCALE)
CONCRETE BARRIER PER DESIGN
EXPANSION MATERIAL (TYP)
12 INCHES OF PERMEABLE MATERIAL
0'-4" (VARIES)
NOTE:
BARRIER SHOWN IS CONCEPTUAL ONLY. DESIGN OF THE BARRIER AND REINFORCING STEEL IS THE RESPONSIBILITY OF THE PROJECT STRUCTURAL ENGINEER.
X/WX TYPICAL CONCRETE JERSEY BARRIER (NOT TO SCALE)
GUIDE RAIL (DESIGNED BY OTHERS)
SLEEVE FOR POST/PIPE (PVC OR SIMILAR)
3.3 FT MINIMUM
5 FT MINIMUM
X/WX GUIDE RAIL DETAIL (NOT TO SCALE)
NOTE:
CONCRETE FILLED TUBE OR FORM TO BE SET DURING THE WALL CONSTRUCTION, NOT DRILLED THROUGH GEOGRID AFTERWARDS WHEN DIRECTLY BEHIND UNITS.
CABLE RAILING POST
17"
CUT GEOGRID AROUND TUBE OR FORM TO FIT
2'-0" (MIN)
GEOGRID
8"Ø CONCRETE FILLED TUBE OR FORM @ 10' O.C. MAX
X/WX CABLE RAILING POST FOUNDATION DETAILS (NOT TO SCALE)
FINISHED GRADE
1'
X
6" NON-REINFORCED CONCRETE BASE LEVELING PAD
X/WX SLOPE ABOVE WALL (NOT TO SCALE)
X/WX SLOPE BELOW WALL (NOT TO SCALE)
CERTIFICATE OF AUTHORIZATION: 2535
DESIGN ENGINEER: DEAN SANDRI
WASHINGTON REGISTRATION: 47447
ANCHOR™ BUILD SOMETHING BEAUTIFUL
5959 BAKER ROAD, SUITE 390
MINNETONKA, MN 55345-5973
PHONE: (952) 933-8854
FAX: (952) 979-8454
WWW.ANCHORWALL.COM
Scale: 3/16" = 1'-0"
VERIFY THAT THE BAR ABOVE IS 1". IF NOT, ADJUST THE SCALE ACCORDINGLY.
Proj. No:
Date: 04/20/11
Reviewed by: AWE
Drawn By: AWE
PROPOSED SEGMENTAL RETAINING WALLS
0 & 4 DEGREE BATTERED ANCHOR LANDMARK WALL SYSTEM
WSDOT SUBMITTAL DETAILS
REVISION DATES (SEE SHEET W1 FOR REVISION HISTORY):
TYPICAL DETAILS
Sheet W9 of 10
ANCHOR WALL SYSTEMS, INC ®
© 2011 ANCHOR WALL ENGINEERING, LLC

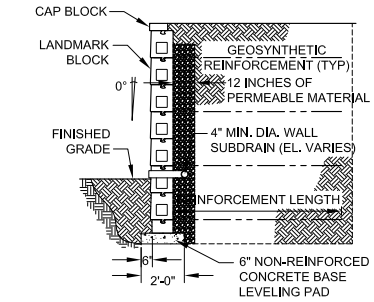

X / WX 0-DEGREE GENERIC CROSS-SECTION (NOT TO SCALE)

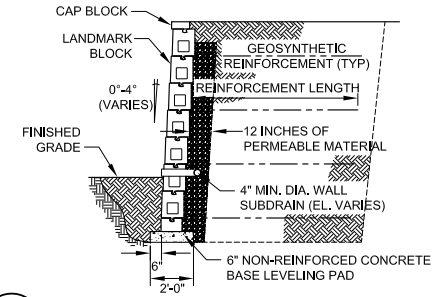

X / WX VARIABLE-DEGREE GENERIC CROSS-SECTION (NOT TO SCALE)

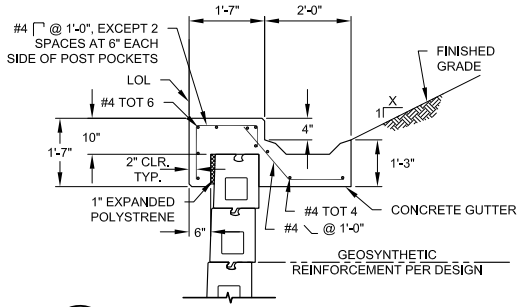

X / WX CONCRETE COPING & GUTTER DETAIL (NOT TO SCALE)

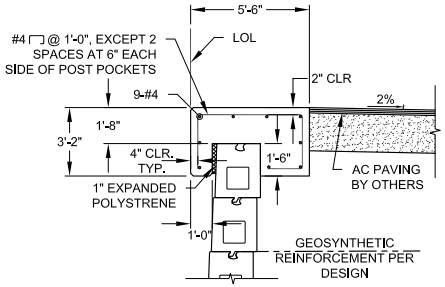

X / WX CONCRETE COPING DETAIL (NOT TO SCALE)

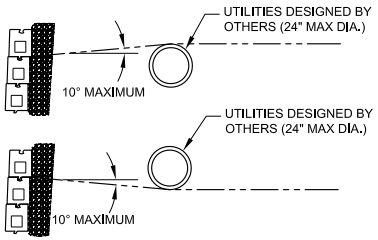

X / WX UTILITIES IN REINFORCED ZONE (NOT TO SCALE)

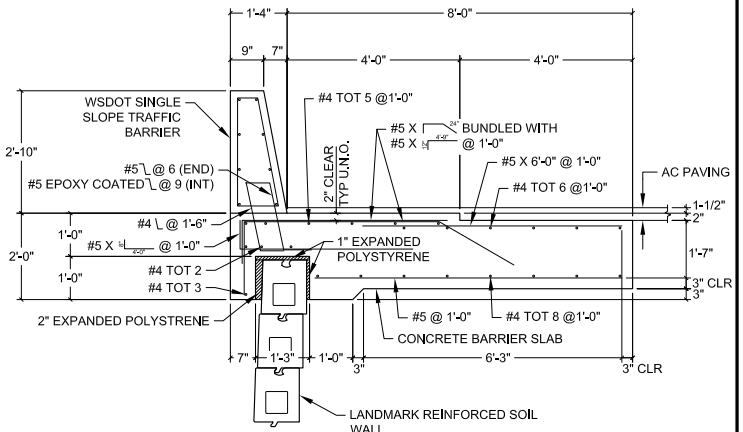

GENERAL NOTES:

1. REINFORCED CONCRETE: $f'c$ = 4,000 PSI (@ 28 DAYS)
   f y = 60,000 PSI
2. PROVIDE EXPANSION JOINTS IN THE WSDOT SINGLE SLOPE TRAFFIC BARRIER @ 18'-0" MINIMUM CENTERS.
3. PROVIDE CONSTRUCTION JOINTS IN THE CONCRETE BARRIER SLAB @ 120'-0" MAXIMUM CENTERS.
4. END REGIONS = TERMINAL 7'-6" OF EACH END OF THE WSDOT SINGLE SLOPE TRAFFIC BARRIER THAT IS SUPPORTED BY THE CONCRETE BARRIER SLAB.
5. DESIGN OF LANDMARK REINFORCED SOIL WALL FOR VEHICULAR IMPACT LOADS BY OTHERS.
6. DESIGN OF GUARDRAIL CONNECTION(S) TO WSDOT SINGLE SLOPE TRAFFIC BARRIER BY OTHERS.
7. REINFORCEMENT NOT SPECIFIED FOR WSDOT SINGLE SLOPE TRAFFIC BARRIER. SHALL BE PER WSDOT STANDARD DETAILS (BY OTHERS).
8. IN THE EVENT THAT A LAYER OF HMA/ACP IS NOT TO BE PROVIDED OVER THE MOMENT SLAB, THE MOMENT SLAB DETAILS SHALL BE MODIFIED TO CONFORM TO WSDOT BDM SECTION 5.7.4-A-1 TYPE 1 PROTECTION SYSTEM.
9. DESIGN CRITERIA: WSDOT BRIDGE DESIGN MANUAL
   AASHTO LRFD BRIDGE DESIGN SPECIFICATIONS

X / WX MOMENT SLAB BARRIER DETAIL (NOT TO SCALE)

CERTIFICATE OF AUTHORIZATION: 2535

DESIGN ENGINEER:	WASHINGTON REGISTRATION:
DEAN SANDRI	47447

ANCHOR™ BUILD SOMETHING BEAUTIFUL
5959 BAKER ROAD, SUITE 390
MINNETONKA, MN 55345-5973
PHONE: (952) 933-8854
FAX: (952) 979-8454
WWW.ANCHORWALL.COM

Scale: 3/16" = 1'-0"

VERIFY THAT THE BAR ABOVE IS 1". IF NOT, ADJUST THE SCALE ACCORDINGLY.

PROPOSED SEGMENTAL RETAINING WALLS
0 & 4 DEGREE BATTERED ANCHOR LANDMARK WALL SYSTEM
WSDOT SUBMITTAL DETAILS

Proj. No:		Reviewed by:	AWE
Date:	04/20/11	Drawn By:	AWE

REVISION DATES (SEE SHEET W1 FOR REVISION HISTORY):

TYPICAL DETAILS

Sheet W10 of 10

® & ™ ANCHOR WALL SYSTEMS, INC
© 2011 ANCHOR WALL ENGINEERING, LLC

Appendix 15-P Preapproved Wall Appendix: Specific Requirements and Details for Allan Block Walls

In addition to the general design requirements provided in Appendix 15-A, the following specific requirements apply:

Facing Blocks –Blocks acceptable for use with this wall system include, AB Classic, and AB Vertical. These blocks are for a facing batter of 1°, 3°, and 6° degrees. Considering the currently approved block dimensions, the maximum vertical spacing of reinforcement allowed to meet the requirements in the AASHTO Specifications is 2 ft.

Soil Reinforcement – Only geosynthetic reinforcement listed in the WSDOT QPL and which has been evaluated for connection strength with the Allan Block wall system shall be used. For walls with a face batter of 1 degrees or more (i.e., facing blocks, AB Classic, and AB Vertical), this includes the following specific products that are approved for use with this wall system:

Miragrid 3XT	Stratagrid SG200
Miragrid 5XT	Stratagrid SG350

Reinforcement pullout shall be calculated based on the default values for geogrid reinforcement provided in the AASHTO Specifications.

Reinforcement/Facing Block Connection Requirements – Connection testing was done for the range of blocks and geosynthetic reinforcements preapproved for this wall system. The connection between Allan Block facing units and the geosynthetic reinforcement is essentially a frictional connection. That being the case, the connection resistance is strongly dependent on the normal force between blocks and in the gravel in-fill inside the blocks and less dependent on the roll or lot specific tensile strength, T_{lot}, as well as the long-term effect of creep on the connection strength. However, neither T_{lot} for each test (only T_{MARV} values for the tested geogrids were provided), nor connection creep tests, were provided. Since no connection creep tests were provided, as required in the AASHTO LRFD Bridge Design manual, RF_{CR} must be used to obtain T_{ac}. Therefore, the long-term connection strength (i.e., T_{ac}) equation provided in the AASHTO LRFD Bridge Design Manual will need to be simplified to the equation shown below:

$$T_{ac} = \frac{T_{ultconn}}{RF_{CR} x RF_D} \quad \text{(15-P-1)}$$

where,

$T_{ultconn}$ is the ultimate connection strength from the product specific connection strength tests, the results of which are provided in Table 15-S-1,

RF_{CR} = creep reduction factor for the geosynthetic, and

RF_D = the durability reduction factor for the geosynthetic.

RF_{CR} and RF_D shall be as provided in the WSDOT QPL, Appendix D.

Table 15-P-1 Approved connection strength design values for Allan Block walls

Applicable Facing Blocks	Geogrid Product	Normal Load, N (lbs/ft)	$T_{ultconn}$ (lbs/ft)	
			Facing Batter = 1° or 3°	Facing Batter = 6°
AB Classic and AB Vertical	Miragrid 3XT	N ≤ 2474 N > 2474	1239 + N*Tan 26° 2,450	1193 + N*Tan 29° 2,560
	Miragrid 5XT	N ≤ 3713 N > 3713	1320 + N*Tan 27° 3,210	1287 + N*Tan 29° 3,350
	Stratagrid SG200	N ≤ 2474 N > 2474	890 + N*Tan 34° 2,560	1383 + N*Tan 18° 2,190
	Stratagrid SG350	N ≤ 3713 N > 3713	1079 + N*Tan 19° 2,360	1257 + N*Tan 12° 2,050

N = normal load at reinforcement layer at facing, in lbs/ft of width parallel to face.

The connection strengths provided in the table assume that crushed rock is used to fill the interior of the blocks. Allan Block also provides the option to grout the interior of the blocks, creating a full mechanical connection. This connection approach is not preapproved, as connection strength data for this situation was not provided, and furthermore, the elevated pH that could be caused by the grout could accelerate chemical degradation. This has not been evaluated.

Approved details for the Allan Block wall system are provided in the following plan sheets. Exceptions and additional requirements regarding these approved details are as follows:

- The culvert penetration and obstruction avoidance details are preapproved up to a diameter of 4 feet.
- In plan sheet 7 of 12, the guard rail detail, the guard rail post shall either be installed through precut holes in the geogrid layers that must be penetrated, or the geogrid layers shall be cut in a manner that prevents ripping or tearing of the geogrid.
- In plan sheet 5 of 12, regarding the geogrid at wall corner detail, cords in the wall facing alignment to form an angle point or a radius shall be no shorter than the width of the roll to insure good contact between the connectors and the geogrid cross-bar throughout the width of the geogrid. Alternatively, the geogrid roll could be cut longitudinally in half to allow a tighter radius, if necessary.
- It is noted in ASTM C1372 that a dimensional tolerance for the height of the block of ⅛ inch is allowed, but that WSDOT GDM Section 15-5.3.8 recommends a tighter dimensional tolerance of 1⁄16 inch. Based on WSDOT experience, for walls greater than 25 ft in height, some cracking of facing blocks due to differential vertical stresses tends to occur in the bottom portion of the wall. Therefore, blocks placed at depths below the wall top of 25 ft or more should be cast to a vertical dimensional tolerance of 1⁄16 inch to reduce the risk of significant cracking of facing blocks.

CONSTRUCTION DRAWINGS PREPARED FOR WASHINGTON STATE DEPARTMENT OF TRANSPORTATION

ALLAN BLOCK DETAIL AND CONSTRUCTION NOTES

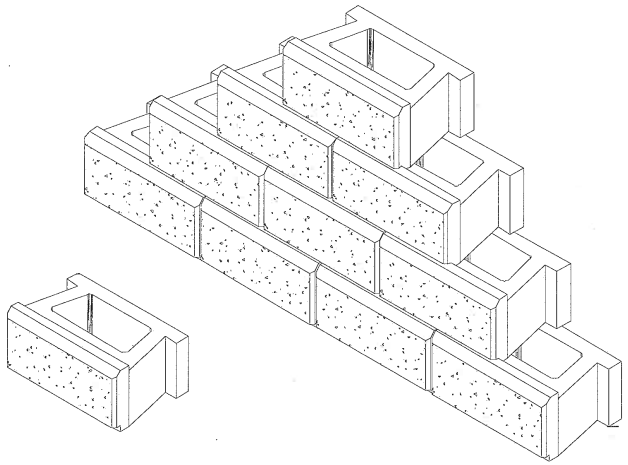

SHEET INDEX

SHEET NO.	SHEET TITLE
1	TITLE SHEET
2	WALL CONSTRUCTION DETAILS (1 OF 2)
3	WALL CONSTRUCTION DETAILS (2 OF 2)
4	CORNER AND CAP DETAILS
5	CURVE WALL AND GEOGRID OBSTRUCTION DETAILS
6	LARGE GEOGRID OBSTRUCTION DETAILS
7	RAILING AND BARRIER DETAILS
8	TRAFFIC BARRIER AND COPING DETAILS
9	WALL PENETRATION DETAILS (1 OF 2)
10	WALL PENETRATION DETAILS (2 OF 2)
11	CULVERT PENETRATION DETAILS
12	TRANSITION AND SLIP JOINT DETAILS

This drawing is furnished for preliminary design purposes only, and should not be used for final design drawings or construction drawings without the certification of a professional engineer registered in the state in which the wall will be constructed. The accuracy and use of details contained in this document are the sole responsibility of the user. The user must verify each detail for accuracy as they pertain to their particular project.

No.	Date	Revision	By
1	4/9/14	Pre-Approval Revisions	CDJ

ALLAN BLOCK
7424 West 78th Street
Bloomington, MN 55439
952-835-5309
allanblock.com

Designed By:	CDJ
Checked By:	
Scale:	Not To Scale
Title:	Title Sheet
Project:	Construction Details and Notes WSDOT
Date:	05/09/2011
Project No:	1057.07
Page No:	1 OF 12

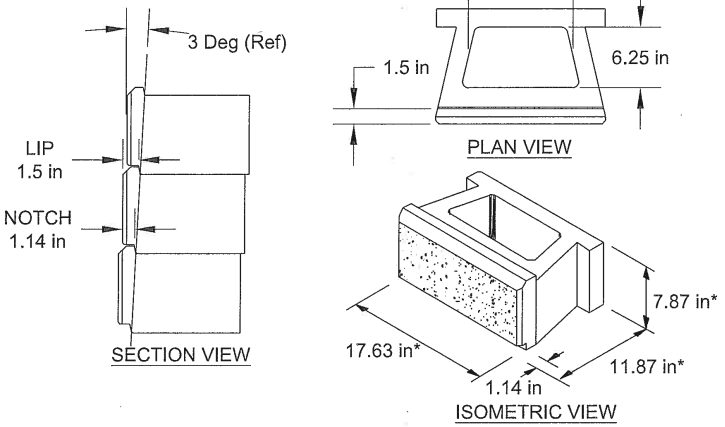

2.1: ALLAN BLOCK AB VERTICAL (3°) - BLOCK PROFILE

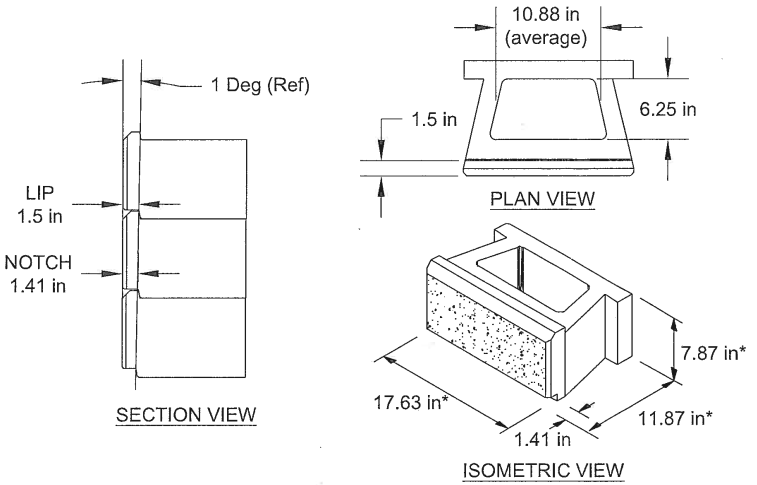

2.2: ALLAN BLOCK AB VERTICAL (1°) - BLOCK PROFILE

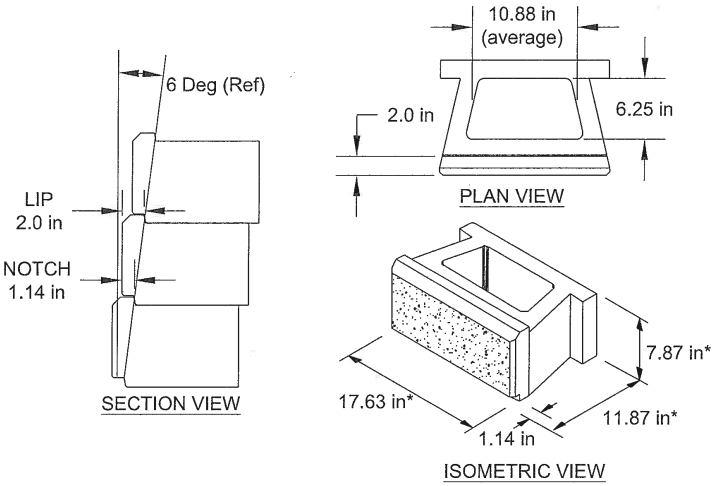

2.3: ALLAN BLOCK AB CLASSIC - BLOCK PROFILE

* NOTE: Actual dimensions and setbacks will vary slightly by manufacturer. Check with your local Allan Block manufacturer for exact specifications.

This drawing is furnished for preliminary design purposes only, and should not be used for final design drawings or construction drawings without the certification of a professional engineer registered in the state in which the wall will be constructed. The accuracy and use of details contained in this document are the sole responsibility of the user. The user must verify each detail for accuracy as they pertain to their particular project.

No.	Date	Revision	By
1	4/9/14	Pre-Approval Revisions	CDJ

ALLAN BLOCK
7424 West 78th Street
Bloomington, MN 55439
952-835-5309
allanblock.com

Designed By:	CDJ
Checked By:	
Scale:	Not To Scale
Title:	Wall Construction Details (1 of 2)
Project:	Construction Details and Notes WSDOT
Date:	05/09/2011
Project No:	1057.07
Page No:	2 OF 13

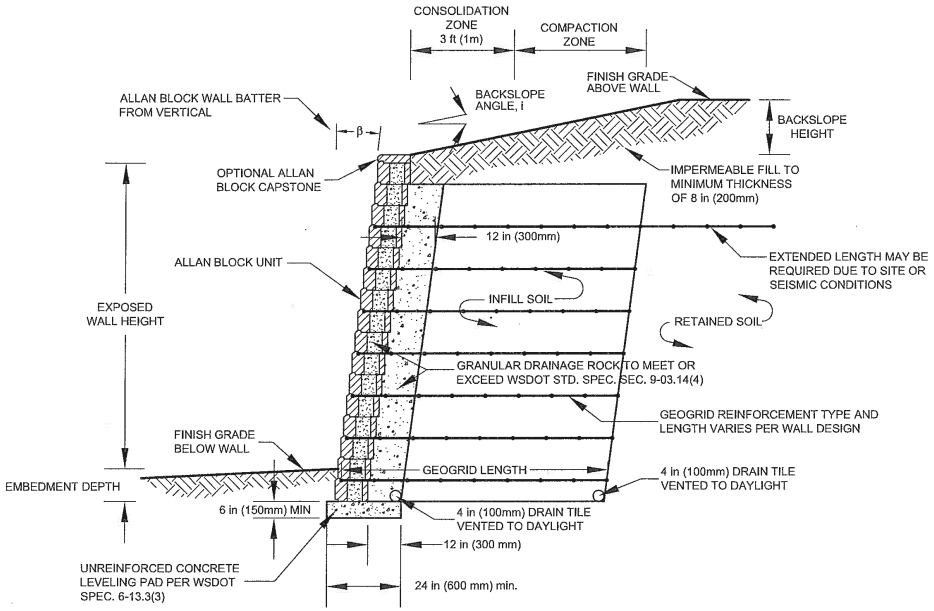

3.1: ALLAN BLOCK TYPICAL SECTION - REINFORCED WALL

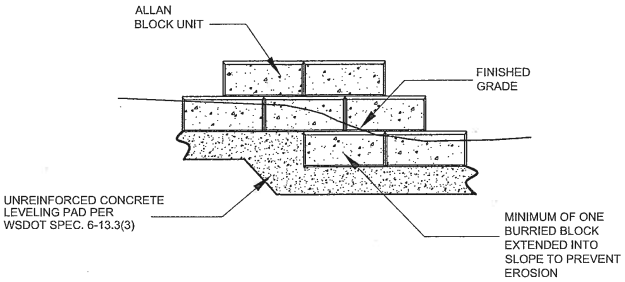

3.2: STEP UP AT BASE COURSE

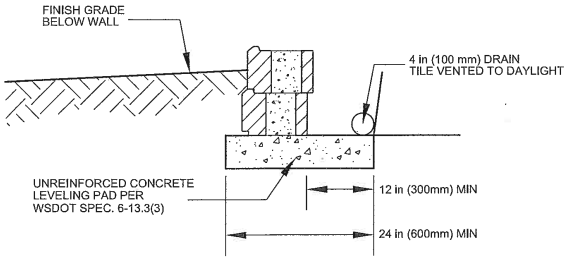

3.3: CONCRETE LEVELING PAD

This drawing is furnished for preliminary design purposes only, and should not be used for final design drawings or construction drawings without the certification of a professional engineer registered in the state in which the wall will be constructed. The accuracy and use of details contained in this document are the sole responsibility of the user. The user must verify each detail for accuracy as they pertain to their particular project.

No.	Date	Revision	By
1	4/9/14	Pre-Approval Revisions	CDJ

ALLAN BLOCK
7424 West 78th Street
Bloomington, MN 55439
952-835-5309
allanblock.com

Designed By: CDJ	Title: Wall Construction Details (2 of 2)	Date: 05/09/2011
Checked By:	Project: Construction Details and Notes WSDOT	Project No: I057.07
Scale: Not To Scale		Page No: 3 OF 12

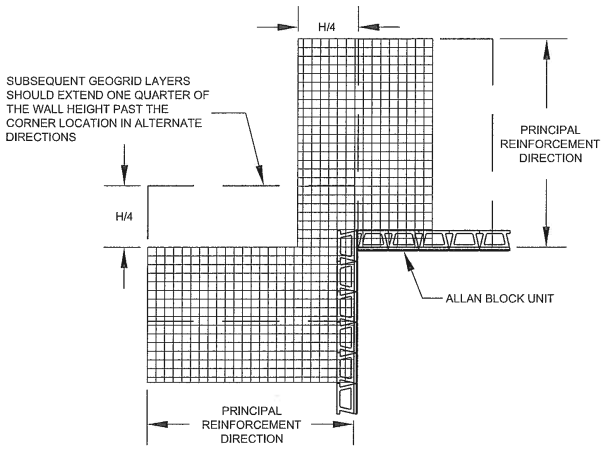

4.1: INSIDE CORNER GEOGRID OVERLAP

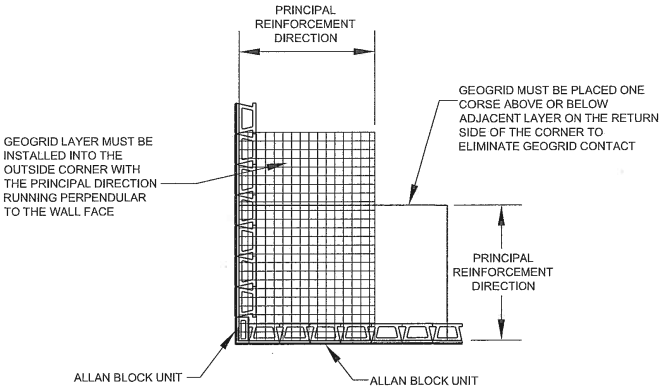

4.2: OUTSIDE CORNER GEOGRID OVERLAP

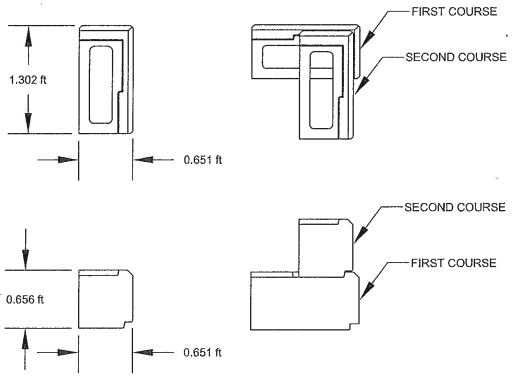

CONSTRUCTION NOTES:
1. ALTERNATE AB CORNER UNITS FOR PROPER RUNNING BOND.
2. FILL CORES WITH CLEAR STONE SIMILAR TO THE CORES OF THE WALL UNITS.

4.3: OUTSIDE CORNER DETAIL

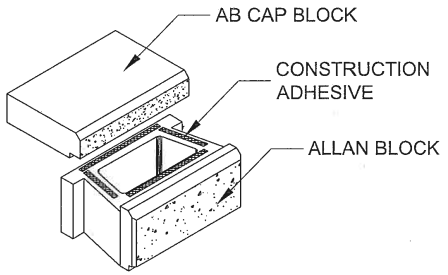

4.4: ALLAN BLOCK CAP INSTALLATION

This drawing is furnished for preliminary design purposes only, and should not be used for final design drawings or construction drawings without the certification of a professional engineer registered in the state in which the wall will be constructed. The accuracy and use of details contained in this document are the sole responsibility of the user. The user must verify each detail for accuracy as they pertain to their particular project.

No.	Date	Revision	By
1	4/9/14	Pre-Approval Revisions	CDJ

ALLAN BLOCK
7424 West 78th Street
Bloomington, MN 55439
952-835-5309
allanblock.com

Designed By:	CDJ
Checked By:	
Scale:	Not To Scale
Title:	Corner and Cap Details
Project:	Construction Details and Notes WSDOT
Date:	05/09/2011
Project No:	I057.07
Page No:	4 OF 12

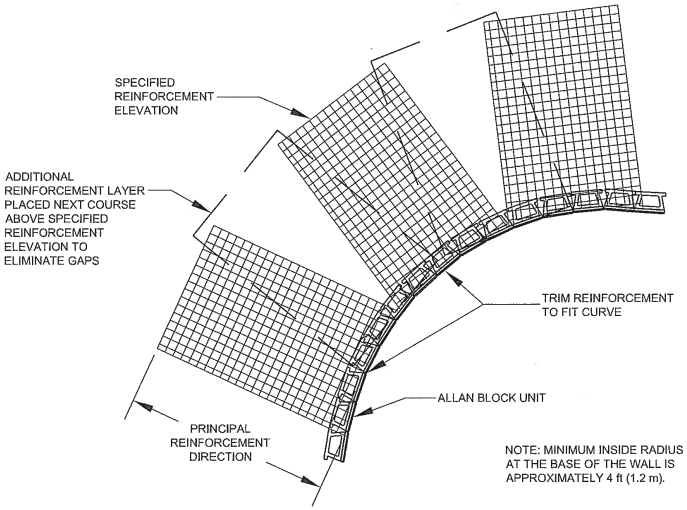

5.1: INSIDE CURVE GEOGRID OVERLAP

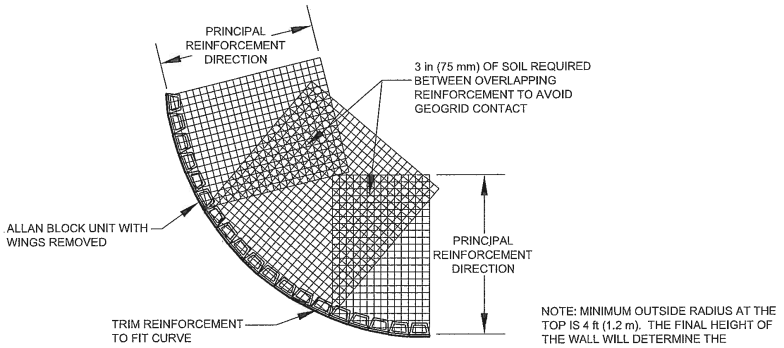

5.2: OUTSIDE CURVE GEOGRID OVERLAP

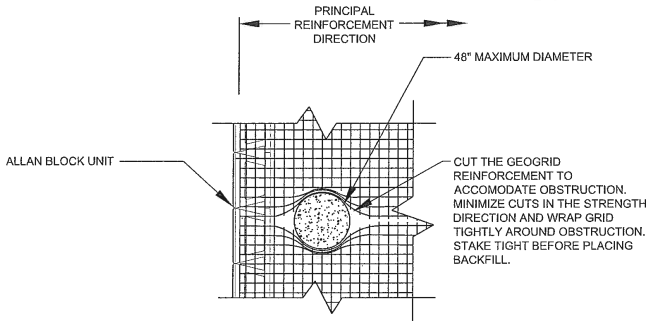

5.3: ALLAN BLOCK TYPICAL DETAIL - GRID OBSTRUCTION

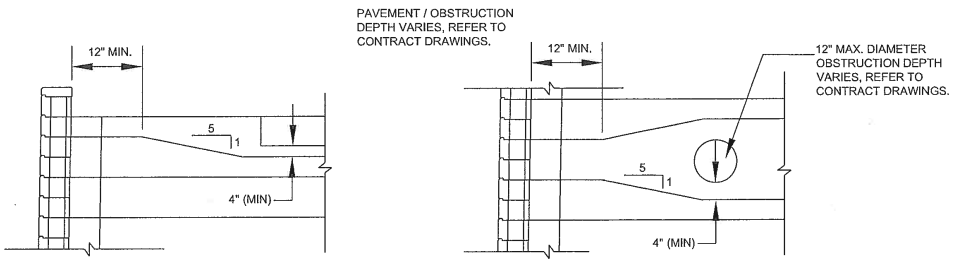

5.4: GEOGRID PLACEMENT AT PAVEMENT / OBSTRUCTION SECTION

This drawing is furnished for preliminary design purposes only, and should not be used for final design drawings or construction drawings without the certification of a professional engineer registered in the state in which the wall will be constructed. The accuracy and use of details contained in this document are the sole responsibility of the user. The user must verify each detail for accuracy as they pertain to their particular project.

No.	Date	Revision	By
1	4/19/14	Pre-Approval Revisions	CDJ

ALLAN BLOCK
7424 West 78th Street
Bloomington, MN 55439
952-835-5309
allanblock.com

Designed By:	CDJ
Checked By:	
Scale:	Not To Scale
Title:	Curve Wall and Geogrid Obstruction Details
Project:	Construction Details and Notes WSDOT
Date:	05/09/2011
Project No:	I057.07
Page No:	5 OF 12

* ENGINEERS NOTE:

ENGINEER MUST VERIFY THE STABILITY OF OBSTRUCTION FOR INTENDED USE AND MUST ADDRESS ANY ADDITIONAL WALL FACING STABILITY REQUIREMENTS.

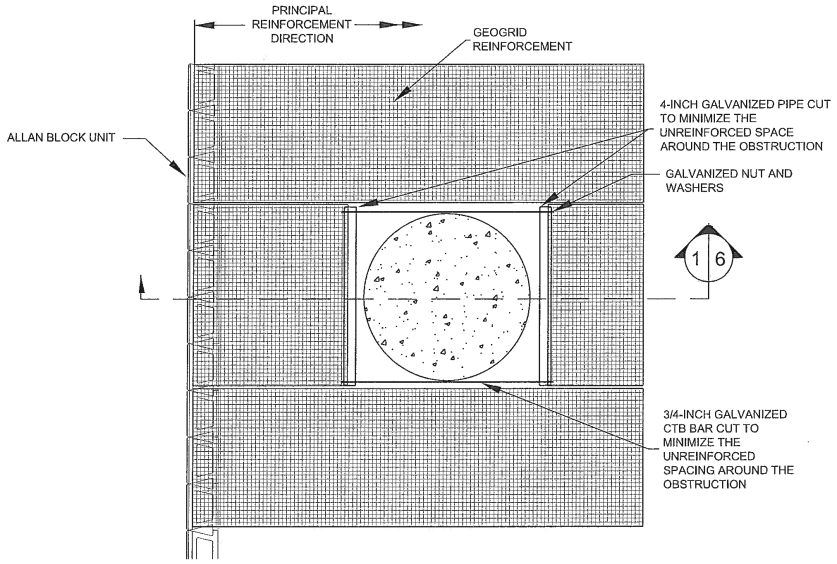

ALLAN BLOCK LARGE GRID OBSTRUCTION DETAIL
SCALE: NOT TO SCALE

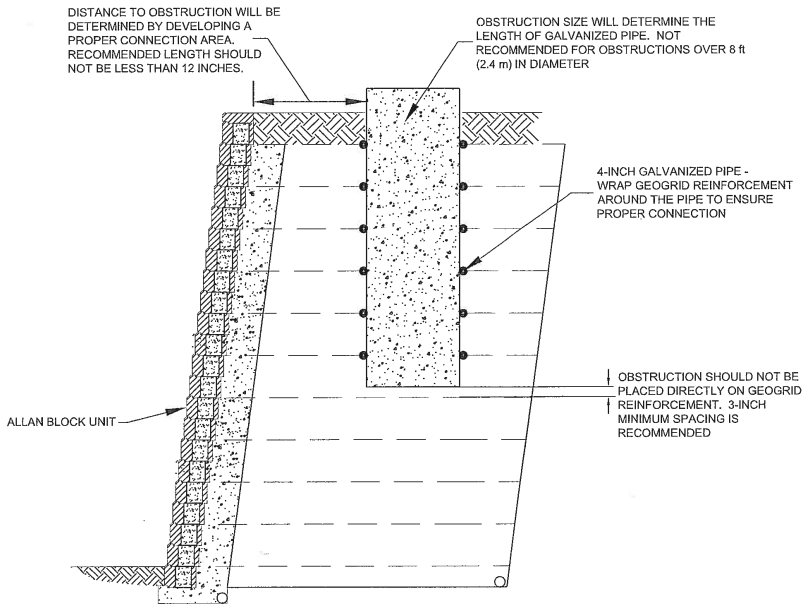

1/6 ALLAN BLOCK DETAIL
SCALE: NOT TO SCALE

6.1: ALLAN BLOCK TYPICAL SECTION - VERTICAL OBSTRUCTION THROUGH WALL

This drawing is furnished for preliminary design purposes only, and should not be used for final design drawings or construction drawings without the certification of a professional engineer registered in the state in which the wall will be constructed. The accuracy and use of details contained in this document are the sole responsibility of the user. The user must verify each detail for accuracy as they pertain to their particular project.

No.	Date	Revision	By
1	4/9/14	Pre-Approval Revisions	CDJ

ALLAN BLOCK
7424 West 78th Street
Bloomington, MN 55439
952-835-5309
allanblock.com

Designed By: CDJ	Title: Large Geogrid Obstruction Details		Date: 05/09/2011
Checked By:	Project: Construction Details and Notes WSDOT		Project No: I057.07
Scale: Not To Scale			Page No: 6 of 12

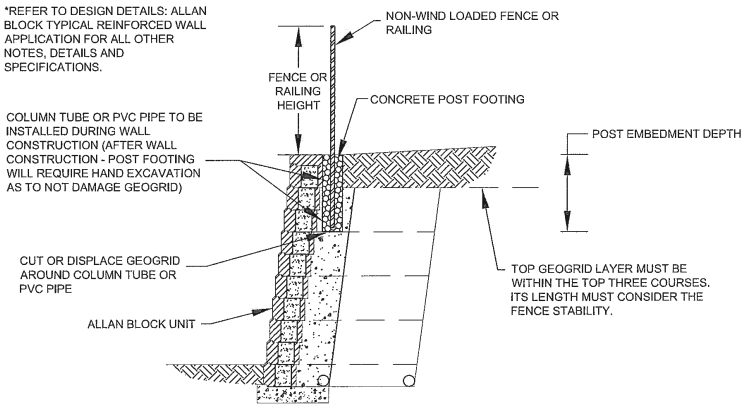

7.1: ALLAN BLOCK TYPICAL SECTION - GUIDE RAIL

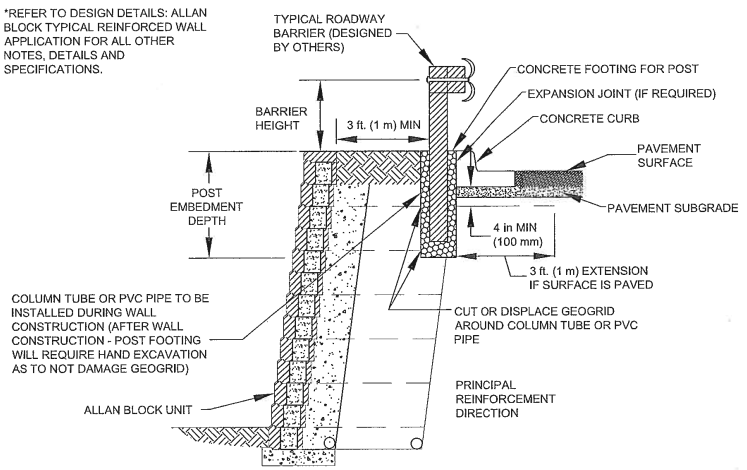

7.2: ALLAN BLOCK TYPICAL SECTION - PARKING GUARD RAIL

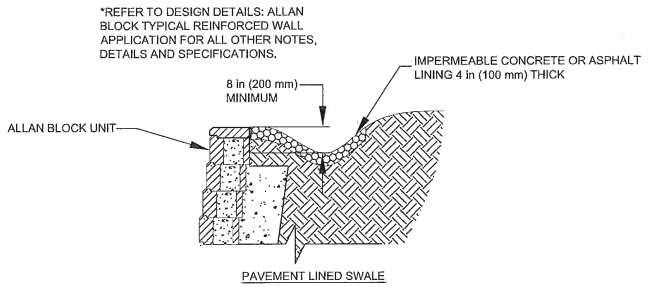

7.3: CEMENT CONCRETE GUTTER DETAIL

This drawing is furnished for preliminary design purposes only, and should not be used for final design drawings or construction drawings without the certification of a professional engineer registered in the state in which the wall will be constructed. The accuracy and use of details contained in this document are the sole responsibility of the user. The user must verify each detail for accuracy as they pertain to their particular project.

No.	Date	Revision	By
1	4/9/14	Pre-Approval Revisions	CDJ

ALLAN BLOCK
7424 West 78th Street
Bloomington, MN 55439
952-835-5309
allanblock.com

Designed By:	CDJ
Checked By:	
Scale:	Not To Scale
Title:	Railing and Barrier Details
Project:	Construction Details and Notes WSDOT
Date:	05/09/2011
Project No:	I057.07
Page No:	7 OF 12

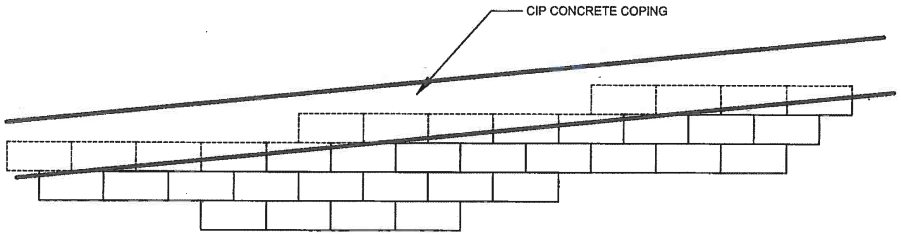

ELEVATION VIEW

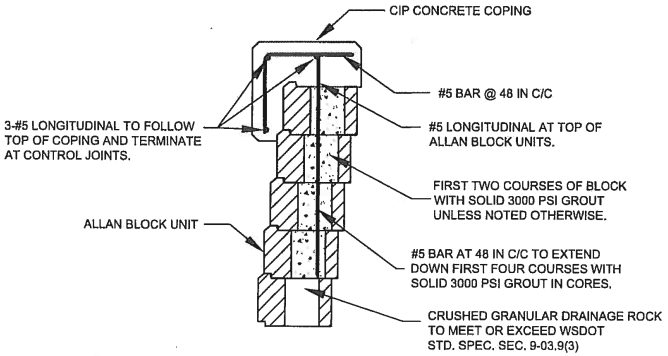

8.1: ALLAN BLOCK TYPICAL SECTION - CIP CONCRETE COPING

WSDOT Conditional Pre-approval:
The details showing grout in the interior cells of the blocks are not pre-approved when the grout is in direct contact with the geogrid reinforcement.

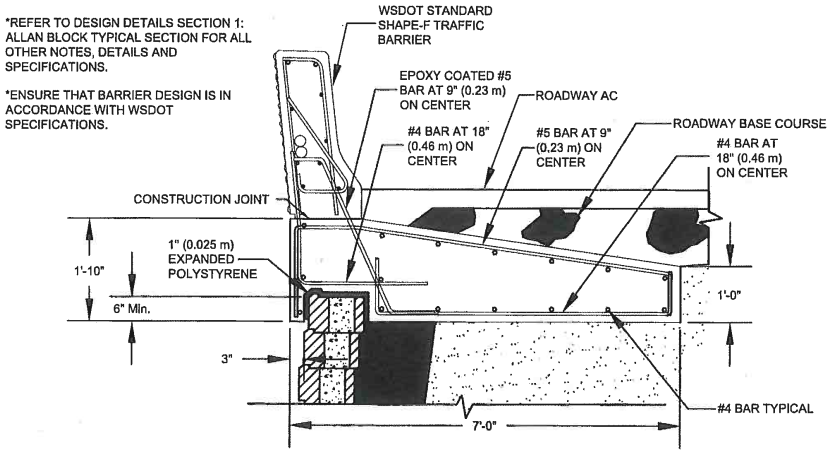

CONCRETE CONSTRUCTION NOTES:
1. POSITIVE BOND BREAKER AND EXPANSION JOINT MATERIAL MUST BE PROVIDED BETWEEN CAST IN PLACE SLAB AND ALLAN BLOCK UNITS
2. CONCRETE MINIMUM COMPRESSIVE STRENGTH f'c = 4000 psi (28 MPa) REBAR MINIMUM TENSILE STRENGTH fy = 65 ksi (45 MPa)
3. CAULK EXPANSION JOINT 4" (0.10 m) ABOVE FINISHED GRADE
4. EXPANSION JOUNTS ARE AT 30' (9 m) ON CENTER MAXIMUM AND 20' (9 m) ON CENTER MINIMUM
5. CONTROL JOINTS ARE AT 10' (3 m) ON CENTER

8.2: ALLAN BLOCK TYPICAL SECTION - TRAFFIC BARRIER

ving is furnished for preliminary design purposes only, and ot be used for final design drawings or construction without the certification of a professional engineer d in the state in which the wall will be constructed. The and use of details contained in this document are the sole bility of the user. The user must verify each detail for as they pertain to their particular project.

No.	Date	Revision	By
1	4/9/14	Pre-Approval Revisions	CDJ
2	9/15/14	References to WSDOT Std. Spec. for Crushed Rock	CDJ

ALLAN BLOCK
7424 West 78th Street
Bloomington, MN 55439
952-835-5309
allanblock.com

Designed By: CDJ	Title: Traffic Barrier and Coping Details
Checked By:	Project: Construction Details and Notes WSDOT
Scale: Not To Scale	Date: 05/09/2011
	Project No: I057.07
	Page No: 6 OF 12

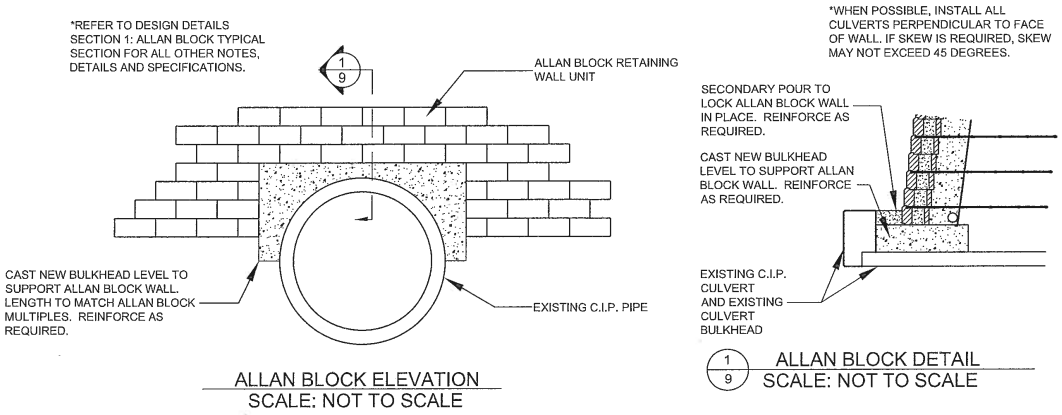

9.1: ALLAN BLOCK TYPICAL SECTION - CULVERT THROUGH WALL

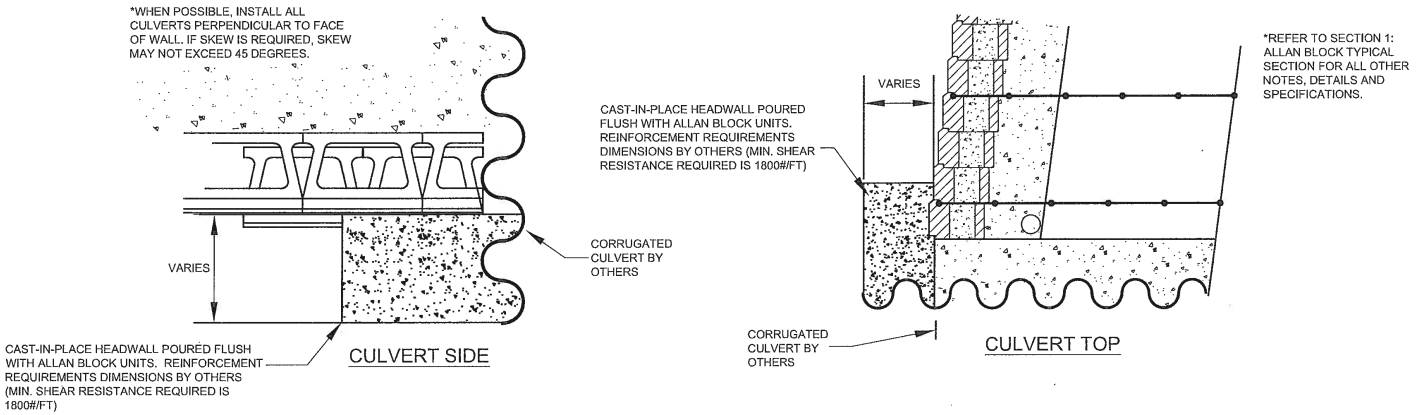

9.2: CULVERT THROUGH WALL DETAIL

This drawing is furnished for preliminary design purposes only, and should not be used for final design drawings or construction drawings without the certification of a professional engineer registered in the state in which the wall will be constructed. The accuracy and use of details contained in this document are the sole responsibility of the user. The user must verify each detail for accuracy as they pertain to their particular project.

No.	Date	Revision	By
1	4/9/14	Pre-Approval Revisions	CDJ

ALLAN BLOCK
7424 West 78th Street
Bloomington, MN 55439
952-835-5309
allanblock.com

Designed By: CDJ	Title: Wall Penetration Details (1 OF 2)
Checked By:	Project: Construction Details and Notes WSDOT
Scale: Not To Scale	Date: 05/09/2011
	Project No: I057.07
	Page No: 9 OF 12

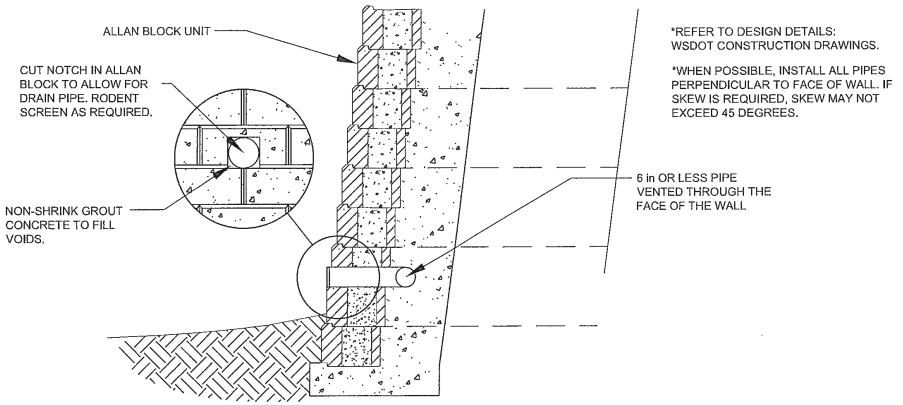

10.1: ALLAN BLOCK TYPICAL SECTION - SMALL PIPE PENETRATION (LESS THAN 6 in DIAMETER)

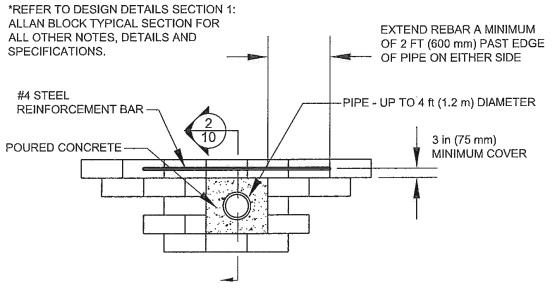

ALLAN BLOCK ELEVATION
SCALE: NOT TO SCALE

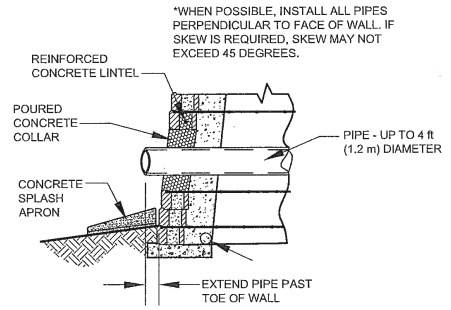

2/10 ALLAN BLOCK DETAIL
SCALE: NOT TO SCALE

10.2: ALLAN BLOCK TYPICAL SECTION (UP TO 4ft DIAMETER)

This drawing is furnished for preliminary design purposes only, and should not be used for final design drawings or construction drawings without the certification of a professional engineer registered in the state in which the wall will be constructed. The accuracy and use of details contained in this document are the sole responsibility of the user. The user must verify each detail for accuracy as they pertain to their particular project.

No.	Date	Revision	By
1	4/9/14	Pre-Approval Revisions	CDJ

ALLAN BLOCK
7424 West 78th Street
Bloomington, MN 55439
952-835-5309
allanblock.com

Designed By:	CDJ
Checked By:	
Scale:	Not To Scale
Title:	Wall Penetration Details (2 OF 2)
Project:	Construction Details and Notes WSDOT
Date:	05/09/2011
Project No:	I057.07
Page No:	10 OF 12

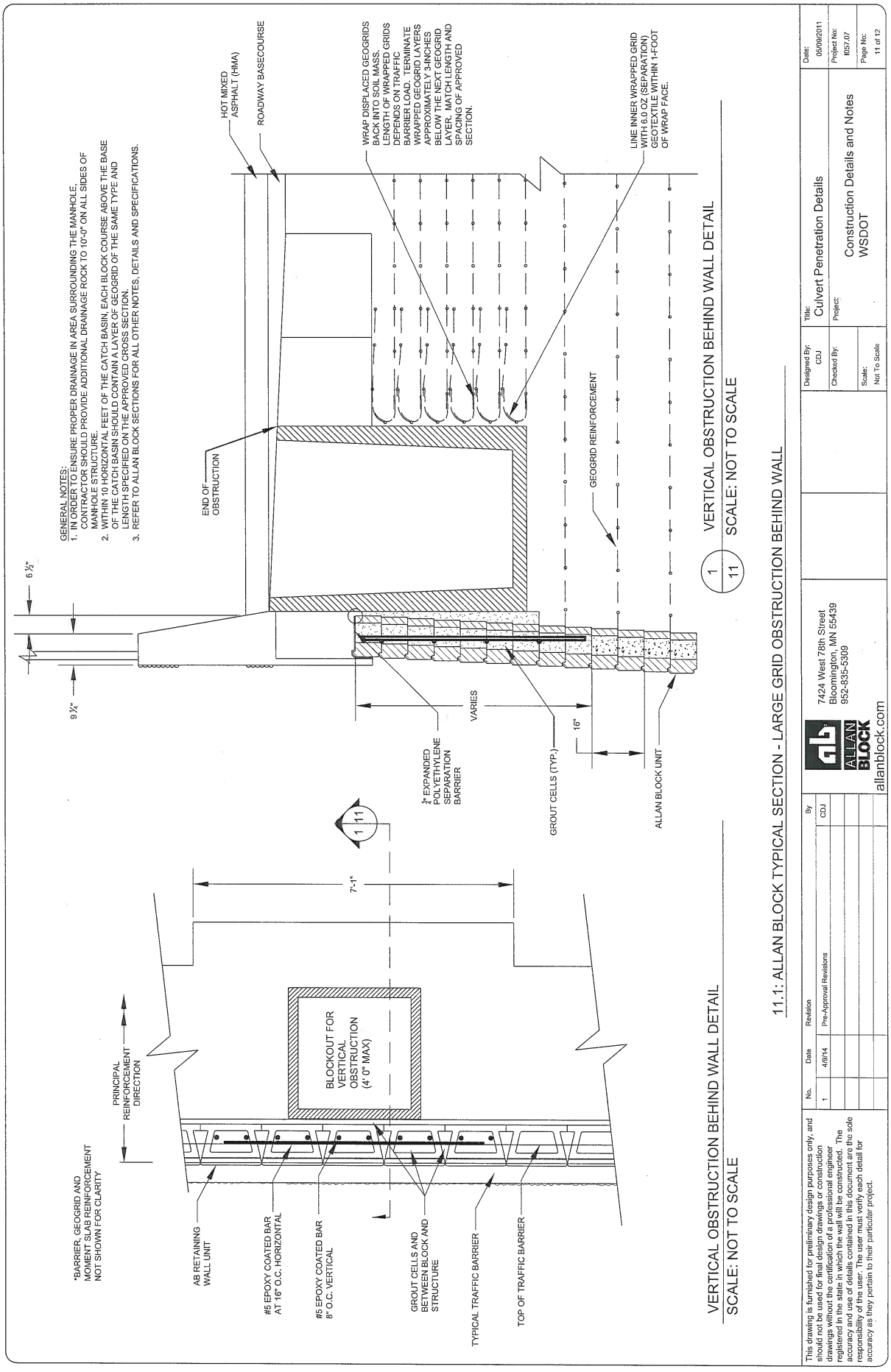
GENERAL NOTES:
1. IN ORDER TO ENSURE PROPER DRAINAGE IN AREA SURROUNDING THE MANHOLE, CONTRACTOR SHOULD PROVIDE ADDITIONAL DRAINAGE ROCK TO 10'-0" ON ALL SIDES OF MANHOLE STRUCTURE.
2. WITHIN 10 HORIZONTAL FEET OF THE CATCH BASIN, EACH BLOCK COURSE ABOVE THE BASE OF THE CATCH BASIN SHOULD CONTAIN A LAYER OF GEOGRID OF THE SAME TYPE AND LENGTH SPECIFIED ON THE APPROVED CROSS SECTION.
3. REFER TO ALLAN BLOCK SECTIONS FOR ALL OTHER NOTES, DETAILS AND SPECIFICATIONS.
HOT MIXED ASPHALT (HMA)
ROADWAY BASECOURSE
WRAP DISPLACED GEOGRIDS BACK INTO SOIL MASS. LENGTH OF WRAPPED GRIDS DEPENDS ON TRAFFIC BARRIER LOAD. TERMINATE WRAPPED GEOGRID LAYERS APPROXIMATELY 3-INCHES BELOW THE NEXT GEOGRID LAYER. MATCH LENGTH AND SPACING OF APPROVED SECTION.
LINE INNER WRAPPED GRID WITH 6.0 OZ (SEPARATION) GEOTEXTILE WITHIN 1-FOOT OF WRAP FACE.
END OF OBSTRUCTION
6½"
9¼"
GEOGRID REINFORCEMENT
VARIES
16"
½" EXPANDED POLYETHYLENE SEPARATION BARRIER
GROUT CELLS (TYP.)
ALLAN BLOCK UNIT
1 11
VERTICAL OBSTRUCTION BEHIND WALL DETAIL
SCALE: NOT TO SCALE
11.1: ALLAN BLOCK TYPICAL SECTION - LARGE GRID OBSTRUCTION BEHIND WALL
7'-1"
BLOCKOUT FOR VERTICAL OBSTRUCTION (4' 0" MAX)
PRINCIPAL REINFORCEMENT DIRECTION
*BARRIER, GEOGRID AND MOMENT SLAB REINFORCEMENT NOT SHOWN FOR CLARITY
AB RETAINING WALL UNIT
#5 EPOXY COATED BAR AT 16" O.C. HORIZONTAL
#5 EPOXY COATED BAR 8" O.C. VERTICAL
GROUT CELLS AND BETWEEN BLOCK AND STRUCTURE
TYPICAL TRAFFIC BARRIER
TOP OF TRAFFIC BARRIER
VERTICAL OBSTRUCTION BEHIND WALL DETAIL
SCALE: NOT TO SCALE
This drawing is furnished for preliminary design purposes only, and should not be used for final design drawings or construction drawings without the certification of a professional engineer registered in the state in which the wall will be constructed. The accuracy and use of details contained in this document are the sole responsibility of the user. The user must verify each detail for accuracy as they pertain to their particular project.
No. Date Revision By
1 4/9/14 Pre-Approval Revisions CDJ
7424 West 78th Street
Bloomington, MN 55439
952-835-5309
ALLAN BLOCK
allanblock.com
Designed By: CDJ
Checked By:
Scale: Not To Scale
Title: Culvert Penetration Details
Project: Construction Details and Notes WSDOT
Date: 05/09/2011
Project No: 1057.07
Page No: 11 of 12

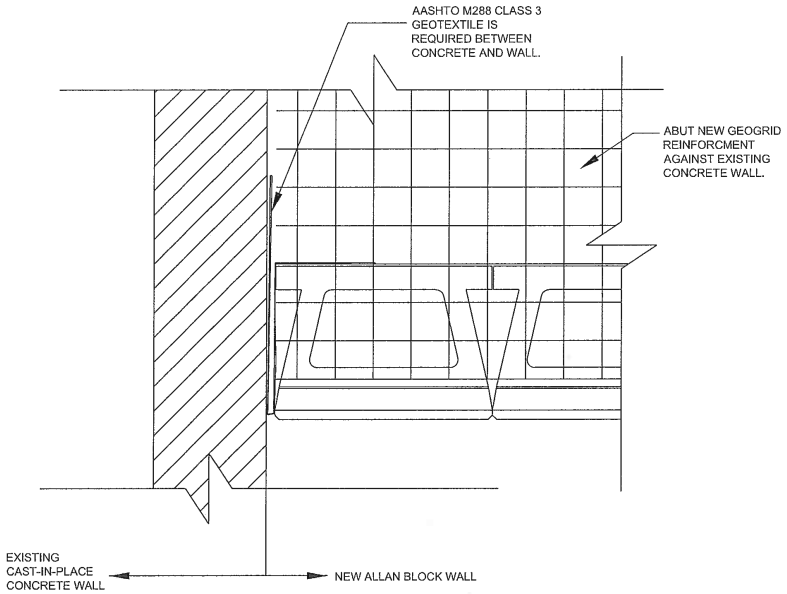

12.1: GEOTEXTILE TRANSITION DETAIL AT STRUCTURE

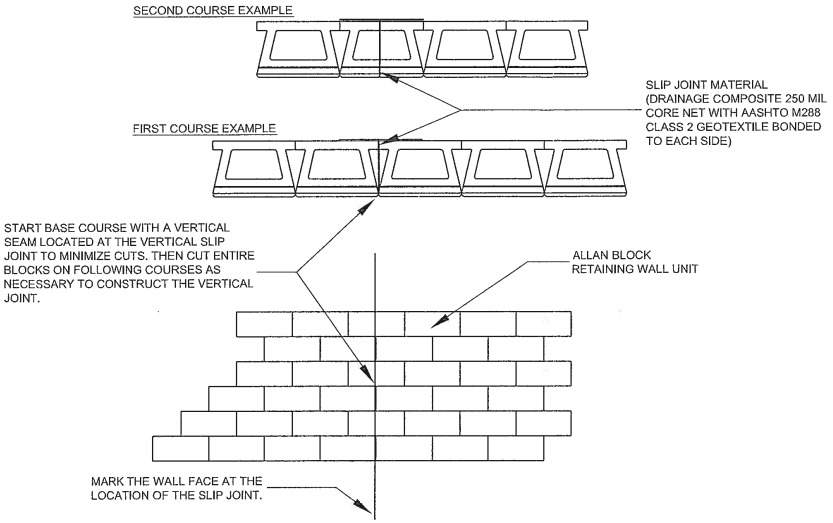

12.2: VERTICAL SLIP JOINT DETAIL

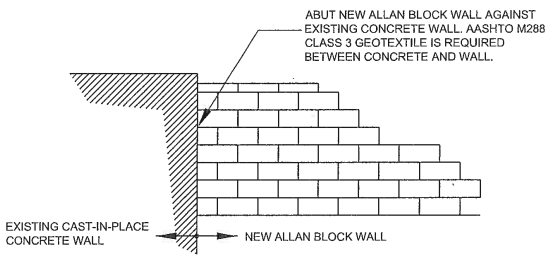

12.3: GEOTEXTILE TRANSITION SECTION AT STRUCTURE

This drawing is furnished for preliminary design purposes only, and should not be used for final design drawings or construction drawings without the certification of a professional engineer registered in the state in which the wall will be constructed. The accuracy and use of details contained in this document are the sole responsibility of the user. The user must verify each detail for accuracy as they pertain to their particular project.

No.	Date	Revision	By
1	4/9/14	Pre-Approval Revisions	CDJ

ALLAN BLOCK
7424 West 78th Street
Bloomington, MN 55439
952-835-5309
allanblock.com

Designed By:	CDJ
Checked By:	
Scale:	Not To Scale
Title:	Transition and Slip Joint Details
Project:	Construction Details and Notes WSDOT
Date:	05/09/2011
Project No:	1057.07
Page No:	12 of 12

Appendix 15-Q Preapproved Wall Appendix: Specific Requirements and Details for Redi-Rock Positive Connection Walls

In addition to the general design requirements provided in Appendix 15-A, the following specific requirements apply:

Facing Blocks –Blocks acceptable for use with this wall system are the 28-inch Positive Connection blocks. The 41-inch blocks shown in the drawings are not considered part of the approved system.

Soil Reinforcement – Only geosynthetic reinforcement listed in the WSDOT QPL and which has been evaluated for connection strength with the Redi-Rock Positive Connection wall system shall be used. The following products are approved for use with this wall system:

Miragrid 5XT
Miragrid 8XT
Miragrid 10XT
Miragrid 20XT
Miragrid 24XT

All Miragrid products for the Redi-Rock Positive Connection system will be 12-inch wide rolls consisting of 11 longitudinal ribs. TenCate Geosynthetics will provide certification of the wide width tensile strength of the 12-inch wide rolls.

Reinforcement pullout shall be calculated based on the default values for geogrid reinforcement provided in the AASHTO Specifications.

Reinforcement/Facing Block Connection Requirements – The connection between the facing units and the geosynthetic reinforcement is essentially independent of the normal force between the blocks (i.e., not a frictional connection), as the reinforcement strips wrap around the internal wall of the block as a continuous layer. The design facing/reinforcement connection strength shall be as specified in the following table:

Table 15-Q-1 Approved connection strength design values for Redi-Rock walls

Geogrid Product	$T_{ultconn}$ (lbs/ft)	T_{lot} (lbs/ft)
Miragrid 5XT	4,460	5,334
Miragrid 8XT	7,928	8,055
Miragrid 10XT	8,681	10,635
Miragrid 20XT	13,447	16,397
Miragrid 24XT	20,199	29,130

T_{ac}, the long-term connection strength, shall be calculated as follows:

$$T_{ac} = \frac{T_{MARV} \bullet CR_u}{RF_{CR} \bullet RF_D} \quad \text{(15-Q-1)}$$

where,

T_{MARV} = the minimum average roll value for the ultimate geosynthetic strength T_{ult},

CR_u = $T_{ultconn}/T_{lot}$, in which $T_{ultconn}$ is the ultimate connection strength and T_{lot} is the lot specific ultimate tensile strength, (i.e., the lot or roll of material specific to the connection testing),

RF_{CR} = creep reduction factor for the geosynthetic, and

RF_D = the durability reduction factor for the geosynthetic.

RF_{CR} and RF_D shall be as provided in the WSDOT QPL, Appendix D.

Approved details for the Redi-Rock Positive Connection wall system are provided in the following plan sheets. Exceptions and additional requirements regarding these approved details are as follows:

- Retaining wall heights up to a maximum of 33 feet.
- Retaining walls having a wall face batter of one degree to five degrees.
- The culvert penetration and obstruction avoidance details are preapproved up to a diameter of 4 feet.
- The pipe penetration details for pipes oriented up to a 45 degree skew angle as measured from perpendicular to the wall face are preapproved for pipe diameters of 18 inches or less.
- The cast-in-place concrete to be constructed around pipes that are protruding through the wall face is considered non-preapproved. Detailed stamped drawings and stamped engineering calculations are to be submitted for approval on a project specific basis.
- Reinforcement pullout design shall be calculated based on the default values for geogrid reinforcement provided in the latest edition of the AASHTO LRFD Bridge Design Specifications.

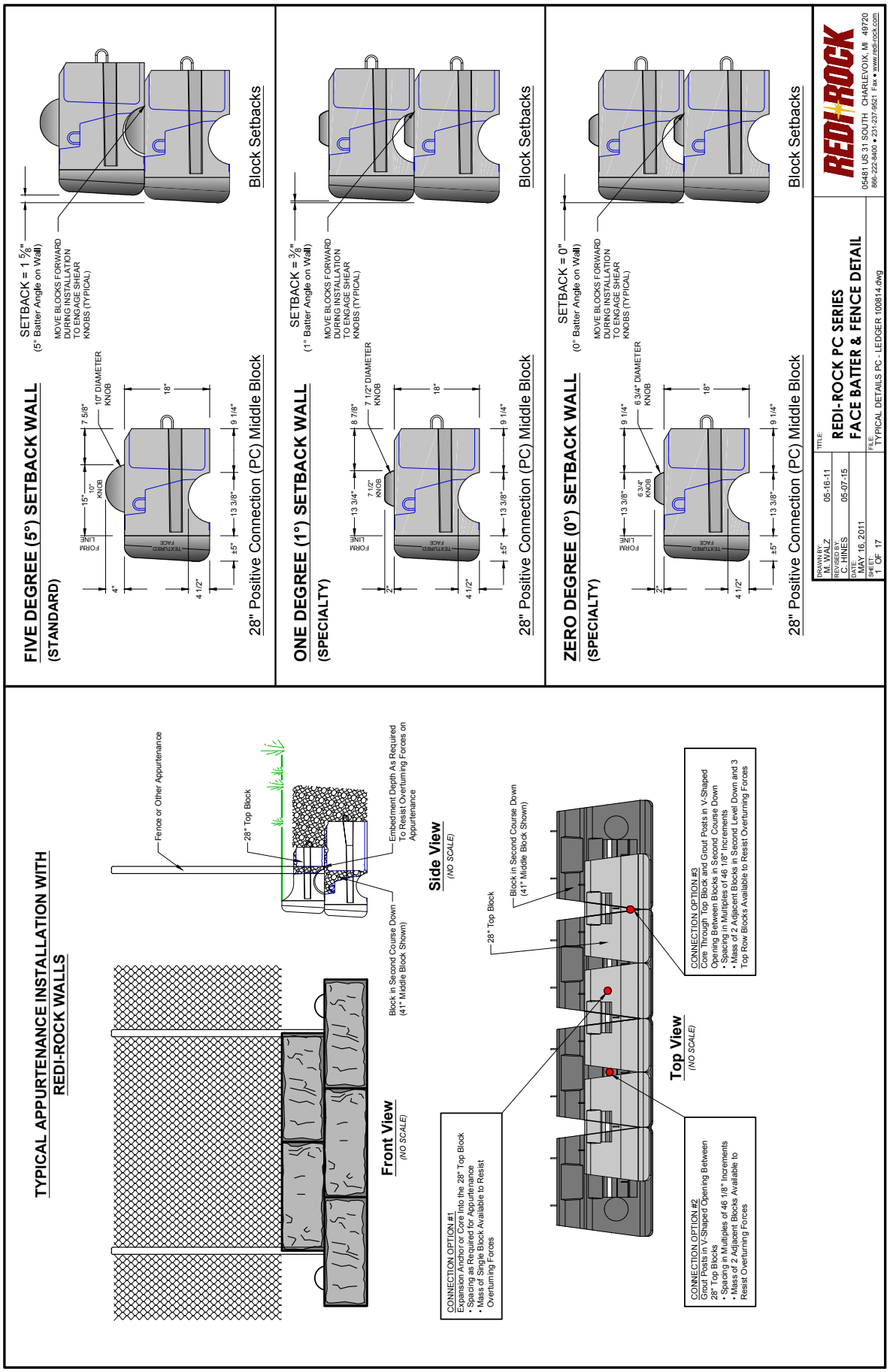
FIVE DEGREE (5°) SETBACK WALL
(STANDARD)
SETBACK = 1 5/8"
(5° Batter Angle on Wall)
MOVE BLOCKS FORWARD DURING INSTALLATION TO ENGAGE SHEAR KNOBS (TYPICAL)
10" DIAMETER KNOB
28" Positive Connection (PC) Middle Block
Block Setbacks
ONE DEGREE (1°) SETBACK WALL
(SPECIALTY)
SETBACK = 3/8"
(1° Batter Angle on Wall)
7 1/2" DIAMETER KNOB
28" Positive Connection (PC) Middle Block
Block Setbacks
ZERO DEGREE (0°) SETBACK WALL
(SPECIALTY)
SETBACK = 0"
(0° Batter Angle on Wall)
6 3/4" DIAMETER KNOB
28" Positive Connection (PC) Middle Block
Block Setbacks
TYPICAL APPURTENANCE INSTALLATION WITH REDI-ROCK WALLS
Fence or Other Appurtenance
28" Top Block
Embedment Depth As Required To Resist Overturning Forces on Appurtenance
Block in Second Course Down (41" Middle Block Shown)
Front View
(NO SCALE)
Side View
(NO SCALE)
Top View
(NO SCALE)
CONNECTION OPTION #1
Expansion Anchor or Core Into the 28" Top Block
• Spacing as Required for Appurtenance
• Mass of Single Block Available to Resist Overturning Forces
CONNECTION OPTION #2
Grout Posts in V-Shaped Opening Between 28" Top Blocks
• Spacing in Multiples of 46 1/8" Increments
• Mass of 2 Adjacent Blocks Available to Resist Overturning Forces
CONNECTION OPTION #3
Core Through Top Block and Grout Posts in V-Shaped Opening Between Blocks in Second Course Down
• Spacing in Multiples of 46 1/8" Increments
• Mass of 2 Adjacent Blocks in Second Level Down and 3 Top Row Blocks Available to Resist Overturning Forces
DRAWN BY: M. WALZ 05-16-11
REVISED BY: C. HINES 05-07-15
DATE: MAY 16, 2011
SHEET: 1 OF 17
TITLE: REDI-ROCK PC SERIES FACE BATTER & FENCE DETAIL
FILE: TYPICAL DETAILS PC - LEDGER 100814.dwg
REDI-ROCK
05481 US 31 SOUTH CHARLEVOIX, MI 49720
866-222-9400 • 231-237-9521 Fax • www.redi-rock.com

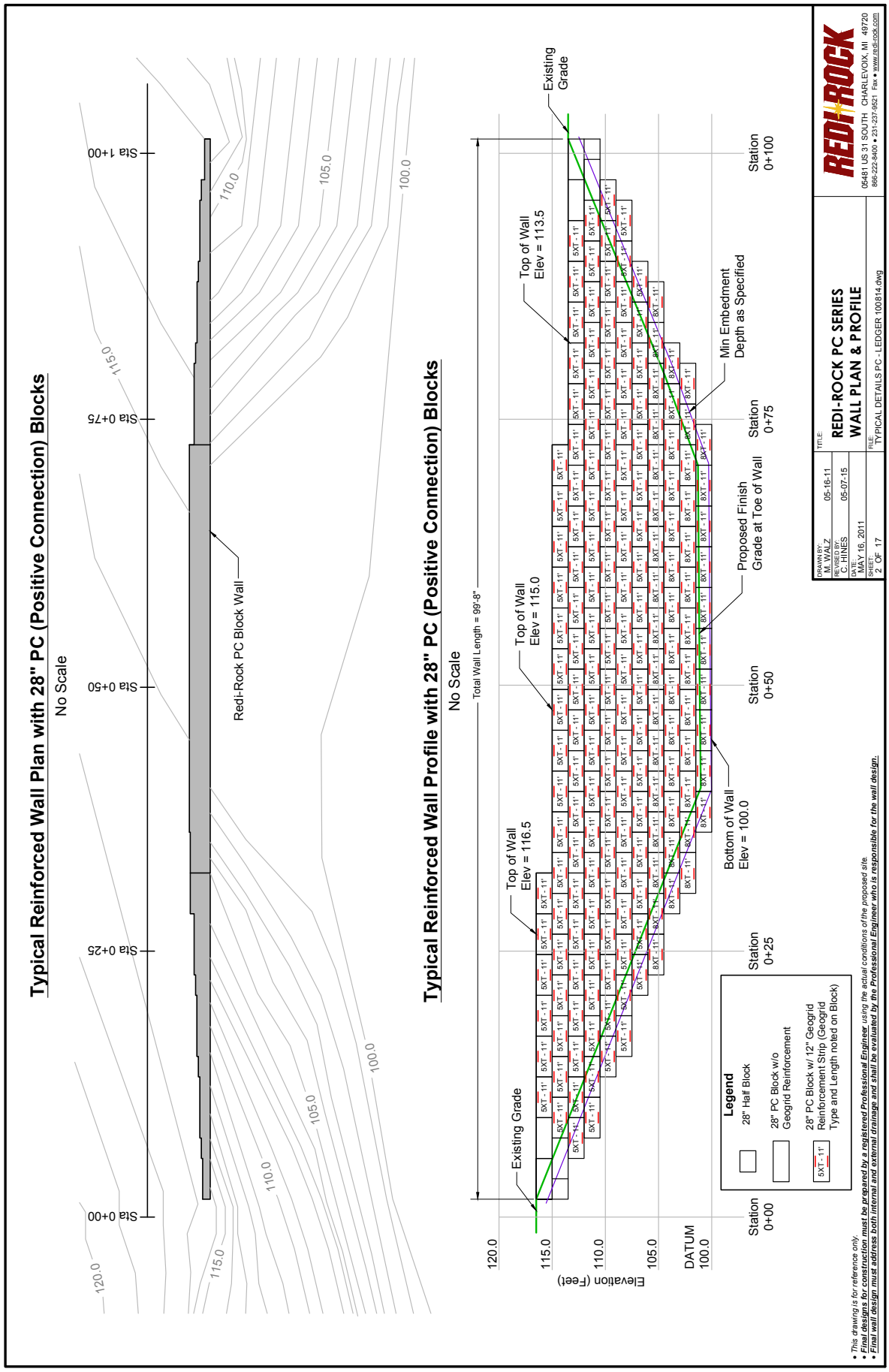
Typical Reinforced Wall Plan with 28" PC (Positive Connection) Blocks
No Scale
Sta 0+00
Sta 0+25
Sta 0+50
Sta 0+75
Sta 1+00
Redi-Rock PC Block Wall
120.0
115.0
110.0
105.0
100.0
Typical Reinforced Wall Profile with 28" PC (Positive Connection) Blocks
No Scale
Total Wall Length = 99'-8"
Existing Grade
Top of Wall Elev = 116.5
Top of Wall Elev = 115.0
Top of Wall Elev = 113.5
Bottom of Wall Elev = 100.0
Proposed Finish Grade at Toe of Wall
Min Embedment Depth as Specified
Station 0+00
Station 0+25
Station 0+50
Station 0+75
Station 0+100
Elevation (Feet)
DATUM 100.0
Legend
28" Half Block
28" PC Block w/o Geogrid Reinforcement
28" PC Block w/ 12" Geogrid Reinforcement Strip (Geogrid Type and Length noted on Block)
5XT - 11'
8XT - 11'
• This drawing is for reference only.
• Final designs for construction must be prepared by a registered Professional Engineer using the actual conditions of the proposed site.
• Final wall design must address both internal and external drainage and shall be evaluated by the Professional Engineer who is responsible for the wall design.
DRAWN BY: M. MAAS 05-16-11
REVISED BY: C. HINES 05-07-15
DATE: MAY 16, 2011
SHEET: 2 OF 17
FILE: TYPICAL DETAILS PC - LEDGER 100814.dwg
TITLE: REDI-ROCK PC SERIES WALL PLAN & PROFILE
REDI-ROCK
05481 US 31 SOUTH CHARLEVOIX, MI 49720
866-222-9400 • 231-237-9621 Fax • www.redi-rock.com

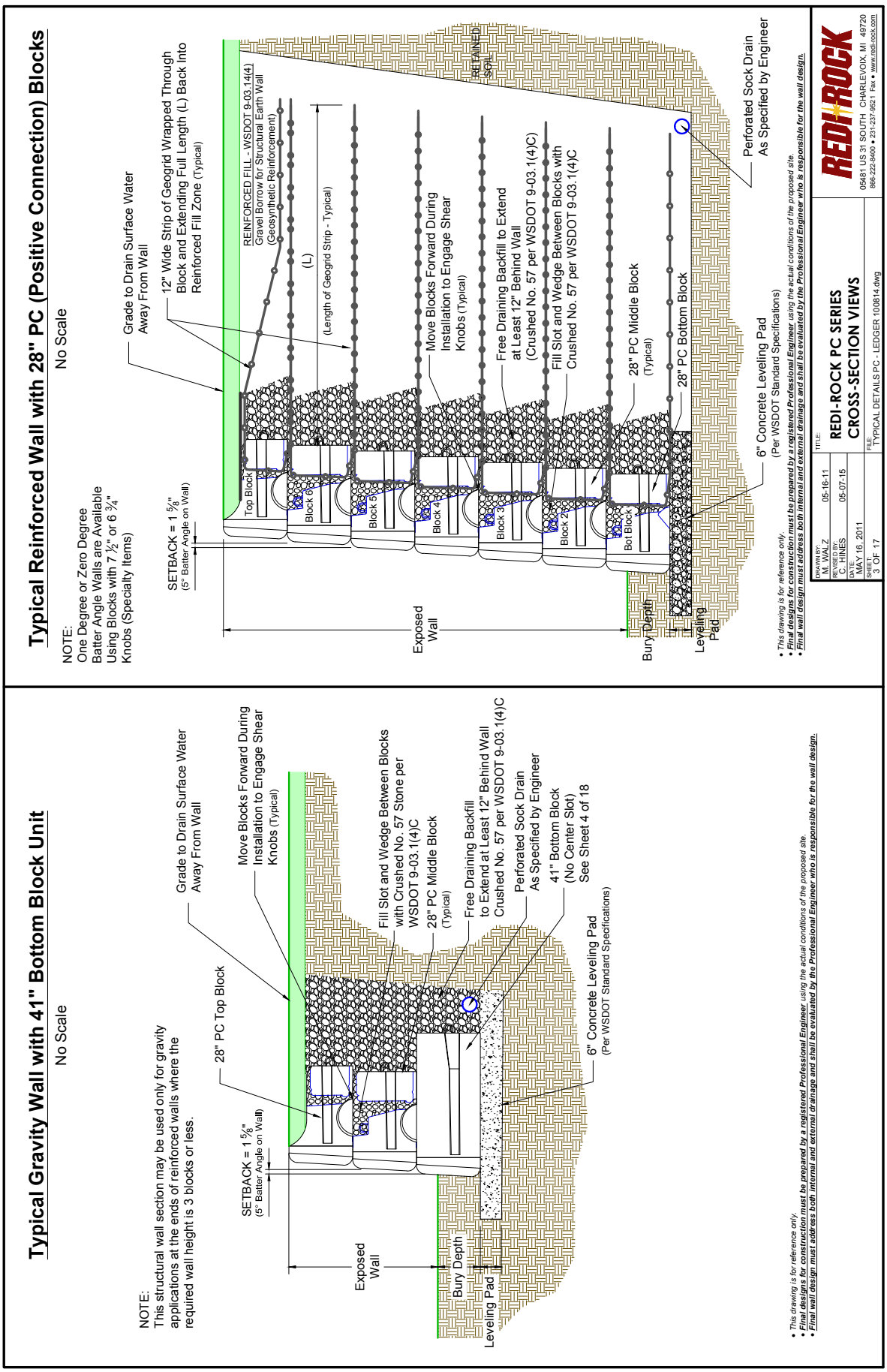
Typical Reinforced Wall with 28" PC (Positive Connection) Blocks
No Scale
NOTE:
One Degree or Zero Degree
Batter Angle Walls are Available
Using Blocks with 7 ½" or 6 ¾"
Knobs (Specialty Items)
Grade to Drain Surface Water
Away From Wall
12" Wide Strip of Geogrid Wrapped Through
Block and Extending Full Length (L) Back Into
Reinforced Fill Zone (Typical)
REINFORCED FILL - WSDOT 9-03.14(4)
Gravel Borrow for Structural Earth Wall
(Geosynthetic Reinforcement)
(L)
(Length of Geogrid Strip - Typical)
RETAINED SOIL
SETBACK = 1 5/6"
(5° Batter Angle on Wall)
Top Block
Block 6
Block 5
Block 4
Block 3
Block 2
Bot Block
Move Blocks Forward During
Installation to Engage Shear
Knobs (Typical)
Free Draining Backfill to Extend
at Least 12" Behind Wall
(Crushed No. 57 per WSDOT 9-03.1(4)C)
Fill Slot and Wedge Between Blocks with
Crushed No. 57 per WSDOT 9-03.1(4)C
28" PC Middle Block
(Typical)
28" PC Bottom Block
Perforated Sock Drain
As Specified by Engineer
6" Concrete Leveling Pad
(Per WSDOT Standard Specifications)
Exposed
Wall
Bury Depth
Leveling
Pad
• This drawing is for reference only.
• Final designs for construction must be prepared by a registered Professional Engineer using the actual conditions of the proposed site.
• Final wall design must address both internal and external drainage and shall be evaluated by the Professional Engineer who is responsible for the wall design.
DRAWN BY: M. WALZ 05-16-11
REVISED BY: C. HINES 05-07-15
DATE: MAY 16, 2011
SHEET: 3 OF 17
TITLE: REDI-ROCK PC SERIES CROSS-SECTION VIEWS
FILE: TYPICAL DETAILS PC - LEDGER 100814.dwg
REDI-ROCK
05481 US 31 SOUTH CHARLEVOIX, MI 49720
866-222-8400 • 231-237-9521 Fax • www.redi-rock.com
Typical Gravity Wall with 41" Bottom Block Unit
No Scale
NOTE:
This structural wall section may be used only for gravity
applications at the ends of reinforced walls where the
required wall height is 3 blocks or less.
Grade to Drain Surface Water
Away From Wall
28" PC Top Block
Move Blocks Forward During
Installation to Engage Shear
Knobs (Typical)
SETBACK = 1 5/6"
(5° Batter Angle on Wall)
Fill Slot and Wedge Between Blocks
with Crushed No. 57 Stone per
WSDOT 9-03.1(4)C
28" PC Middle Block
(Typical)
Free Draining Backfill
to Extend at Least 12" Behind Wall
Crushed No. 57 per WSDOT 9-03.1(4)C
Perforated Sock Drain
As Specified by Engineer
41" Bottom Block
(No Center Slot)
See Sheet 4 of 18
6" Concrete Leveling Pad
(Per WSDOT Standard Specifications)
Exposed
Wall
Bury Depth
Leveling Pad
• This drawing is for reference only.
• Final designs for construction must be prepared by a registered Professional Engineer using the actual conditions of the proposed site.
• Final wall design must address both internal and external drainage and shall be evaluated by the Professional Engineer who is responsible for the wall design.

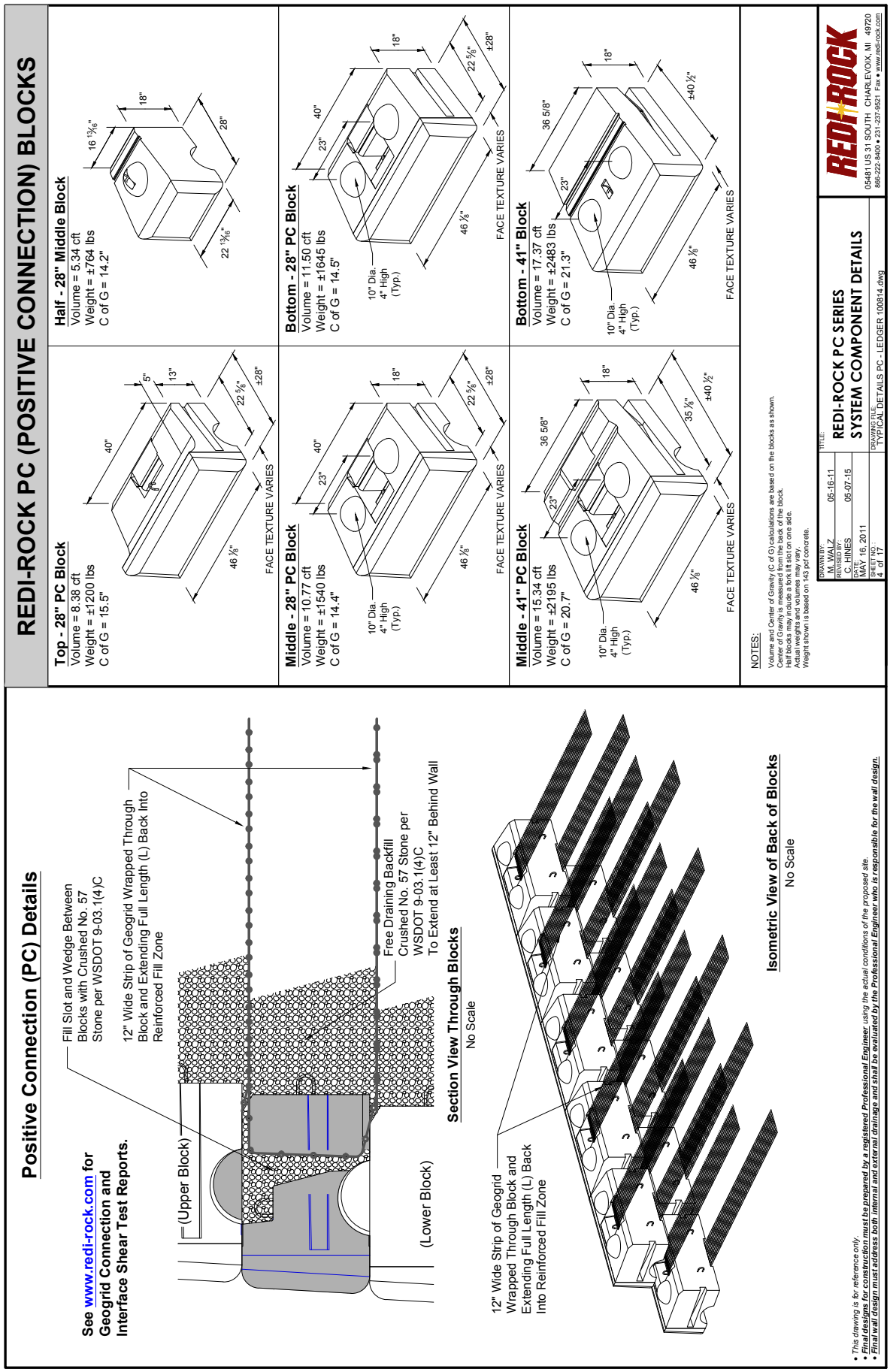
REDI-ROCK PC (POSITIVE CONNECTION) BLOCKS
Top - 28" PC Block
Volume = 8.38 cft
Weight = ±1200 lbs
C of G = 15.5"
Half - 28" Middle Block
Volume = 5.34 cft
Weight = ±764 lbs
C of G = 14.2"
Middle - 28" PC Block
Volume = 10.77 cft
Weight = ±1540 lbs
C of G = 14.4"
Bottom - 28" PC Block
Volume = 11.50 cft
Weight = ±1645 lbs
C of G = 14.5"
Middle - 41" PC Block
Volume = 15.34 cft
Weight = ±2195 lbs
C of G = 20.7"
Bottom - 41" Block
Volume = 17.37 cft
Weight = ±2483 lbs
C of G = 21.3"
FACE TEXTURE VARIES
10" Dia. 4" High (Typ.)
NOTES:
Volume and Center of Gravity (C of G) calculations are based on the blocks as shown.
Center of Gravity is measured from the back of the block.
Half blocks may include a fork lift slot on one side.
Actual weights and volumes may vary.
Weight shown is based on 142 pcf concrete.
DRAWN BY: M. WALZ 05-16-11
REVISED BY: C. HINES 05-07-15
DATE: MAY 16, 2011
SHEET NO.: 4 of 17
TITLE: REDI-ROCK PC SERIES SYSTEM COMPONENT DETAILS
DRAWING FILE: TYPICAL DETAILS PC - LEDGER 100814.dwg
REDI-ROCK
05481 US 31 SOUTH CHARLEVOIX, MI 49720
866-222-8400 • 231-237-9521 Fax • www.redi-rock.com
Positive Connection (PC) Details
See www.redi-rock.com for Geogrid Connection and Interface Shear Test Reports.
Fill Slot and Wedge Between Blocks with Crushed No. 57 Stone per WSDOT 9-03.1(4)C
12" Wide Strip of Geogrid Wrapped Through Block and Extending Full Length (L) Back Into Reinforced Fill Zone
(Upper Block)
(Lower Block)
Free Draining Backfill Crushed No. 57 Stone per WSDOT 9-03.1(4)C To Extend at Least 12" Behind Wall
Section View Through Blocks
No Scale
12" Wide Strip of Geogrid Wrapped Through Block and Extending Full Length (L) Back Into Reinforced Fill Zone
Isometric View of Back of Blocks
No Scale
• This drawing is for reference only.
• Final designs for construction must be prepared by a registered Professional Engineer using the actual conditions of the proposed site.
• Final wall design must address both internal and external drainage and shall be evaluated by the Professional Engineer who is responsible for the wall design.

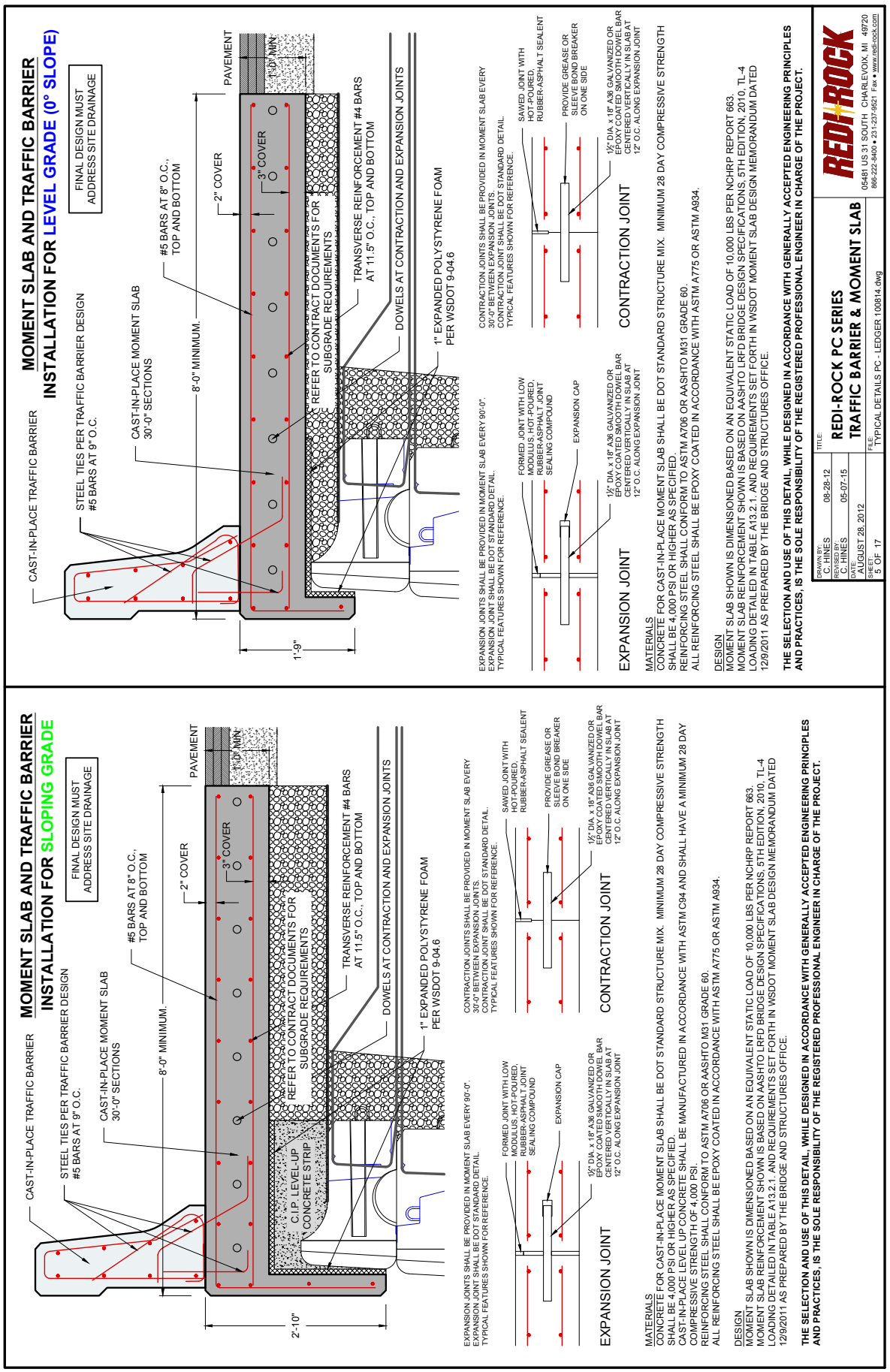
MOMENT SLAB AND TRAFFIC BARRIER
INSTALLATION FOR SLOPING GRADE
CAST-IN-PLACE TRAFFIC BARRIER
STEEL TIES PER TRAFFIC BARRIER DESIGN
#5 BARS AT 9" O.C.
CAST-IN-PLACE MOMENT SLAB
30'-0" SECTIONS
FINAL DESIGN MUST
ADDRESS SITE DRAINAGE
#5 BARS AT 8" O.C.,
TOP AND BOTTOM
8'-0" MINIMUM.
2" COVER
3" COVER
PAVEMENT
1'-0" MIN
2'-10"
C.I.P. LEVEL-UP
CONCRETE STRIP
REFER TO CONTRACT DOCUMENTS FOR
SUBGRADE REQUIREMENTS
TRANSVERSE REINFORCEMENT #4 BARS
AT 11.5" O.C., TOP AND BOTTOM
DOWELS AT CONTRACTION AND EXPANSION JOINTS
1" EXPANDED POLYSTYRENE FOAM
PER WSDOT 9-04.6
EXPANSION JOINTS SHALL BE PROVIDED IN MOMENT SLAB EVERY 90'-0".
EXPANSION JOINT SHALL BE DOT STANDARD DETAIL.
TYPICAL FEATURES SHOWN FOR REFERENCE.
CONTRACTION JOINTS SHALL BE PROVIDED IN MOMENT SLAB EVERY
30'-0" BETWEEN EXPANSION JOINTS.
CONTRACTION JOINT SHALL BE DOT STANDARD DETAIL.
TYPICAL FEATURES SHOWN FOR REFERENCE.
FORMED JOINT WITH LOW
MODULUS, HOT-POURED,
RUBBER-ASPHALT JOINT
SEALING COMPOUND
EXPANSION CAP
SAWED JOINT WITH
HOT-POURED,
RUBBER-ASPHALT SEALENT
PROVIDE GREASE OR
SLEEVE BOND BREAKER
ON ONE SIDE
1½" DIA. x 18" A36 GALVANIZED OR
EPOXY COATED SMOOTH DOWEL BAR
CENTERED VERTICALLY IN SLAB AT
12" O.C. ALONG EXPANSION JOINT
EXPANSION JOINT
CONTRACTION JOINT
MATERIALS
CONCRETE FOR CAST-IN-PLACE MOMENT SLAB SHALL BE DOT STANDARD STRUCTURE MIX. MINIMUM 28 DAY COMPRESSIVE STRENGTH
SHALL BE 4,000 PSI OR HIGHER AS SPECIFIED.
CAST-IN-PLACE LEVEL UP CONCRETE SHALL BE MANUFACTURED IN ACCORDANCE WITH ASTM C94 AND SHALL HAVE A MINIMUM 28 DAY
COMPRESSIVE STRENGTH OF 4,000 PSI.
REINFORCING STEEL SHALL CONFORM TO ASTM A706 OR AASHTO M31 GRADE 60.
ALL REINFORCING STEEL SHALL BE EPOXY COATED IN ACCORDANCE WITH ASTM A775 OR ASTM A934.
DESIGN
MOMENT SLAB SHOWN IS DIMENSIONED BASED ON AN EQUIVALENT STATIC LOAD OF 10,000 LBS PER NCHRP REPORT 663.
MOMENT SLAB REINFORCEMENT SHOWN IS BASED ON AASHTO LRFD BRIDGE DESIGN SPECIFICATIONS, 5TH EDITION, 2010, TL-4
LOADING DETAILED IN TABLE A13.2.1, AND REQUIREMENTS SET FORTH IN WSDOT MOMENT SLAB DESIGN MEMORANDUM DATED
12/9/2011 AS PREPARED BY THE BRIDGE AND STRUCTURES OFFICE.
THE SELECTION AND USE OF THIS DETAIL, WHILE DESIGNED IN ACCORDANCE WITH GENERALLY ACCEPTED ENGINEERING PRINCIPLES
AND PRACTICES, IS THE SOLE RESPONSIBILITY OF THE REGISTERED PROFESSIONAL ENGINEER IN CHARGE OF THE PROJECT.
MOMENT SLAB AND TRAFFIC BARRIER
INSTALLATION FOR LEVEL GRADE (0° SLOPE)
CAST-IN-PLACE TRAFFIC BARRIER
STEEL TIES PER TRAFFIC BARRIER DESIGN
#5 BARS AT 9" O.C.
CAST-IN-PLACE MOMENT SLAB
30'-0" SECTIONS
FINAL DESIGN MUST
ADDRESS SITE DRAINAGE
#5 BARS AT 8" O.C.,
TOP AND BOTTOM
8'-0" MINIMUM.
2" COVER
3" COVER
PAVEMENT
1'-0" MIN
1'-9"
REFER TO CONTRACT DOCUMENTS FOR
SUBGRADE REQUIREMENTS
TRANSVERSE REINFORCEMENT #4 BARS
AT 11.5" O.C., TOP AND BOTTOM
DOWELS AT CONTRACTION AND EXPANSION JOINTS
1" EXPANDED POLYSTYRENE FOAM
PER WSDOT 9-04.6
EXPANSION JOINTS SHALL BE PROVIDED IN MOMENT SLAB EVERY 90'-0".
EXPANSION JOINT SHALL BE DOT STANDARD DETAIL.
TYPICAL FEATURES SHOWN FOR REFERENCE.
CONTRACTION JOINTS SHALL BE PROVIDED IN MOMENT SLAB EVERY
30'-0" BETWEEN EXPANSION JOINTS.
CONTRACTION JOINT SHALL BE DOT STANDARD DETAIL.
TYPICAL FEATURES SHOWN FOR REFERENCE.
FORMED JOINT WITH LOW
MODULUS, HOT-POURED,
RUBBER-ASPHALT JOINT
SEALING COMPOUND
EXPANSION CAP
SAWED JOINT WITH
HOT-POURED,
RUBBER-ASPHALT SEALENT
PROVIDE GREASE OR
SLEEVE BOND BREAKER
ON ONE SIDE
1½" DIA. x 18" A36 GALVANIZED OR
EPOXY COATED SMOOTH DOWEL BAR
CENTERED VERTICALLY IN SLAB AT
12" O.C. ALONG EXPANSION JOINT
EXPANSION JOINT
CONTRACTION JOINT
MATERIALS
CONCRETE FOR CAST-IN-PLACE MOMENT SLAB SHALL BE DOT STANDARD STRUCTURE MIX. MINIMUM 28 DAY COMPRESSIVE STRENGTH
SHALL BE 4,000 PSI OR HIGHER AS SPECIFIED.
REINFORCING STEEL SHALL CONFORM TO ASTM A706 OR AASHTO M31 GRADE 60.
ALL REINFORCING STEEL SHALL BE EPOXY COATED IN ACCORDANCE WITH ASTM A775 OR ASTM A934.
DESIGN
MOMENT SLAB SHOWN IS DIMENSIONED BASED ON AN EQUIVALENT STATIC LOAD OF 10,000 LBS PER NCHRP REPORT 663.
MOMENT SLAB REINFORCEMENT SHOWN IS BASED ON AASHTO LRFD BRIDGE DESIGN SPECIFICATIONS, 5TH EDITION, 2010, TL-4
LOADING DETAILED IN TABLE A13.2.1. AND REQUIREMENTS SET FORTH IN WSDOT MOMENT SLAB DESIGN MEMORANDUM DATED
12/9/2011 AS PREPARED BY THE BRIDGE AND STRUCTURES OFFICE.
THE SELECTION AND USE OF THIS DETAIL, WHILE DESIGNED IN ACCORDANCE WITH GENERALLY ACCEPTED ENGINEERING PRINCIPLES
AND PRACTICES, IS THE SOLE RESPONSIBILITY OF THE REGISTERED PROFESSIONAL ENGINEER IN CHARGE OF THE PROJECT.
DRAWN BY: C. HINES 08-28-12
REVISED BY: C. HINES 05-07-15
DATE: AUGUST 28, 2012
SHEET: 5 OF 17
TITLE:
REDI-ROCK PC SERIES
TRAFFIC BARRIER & MOMENT SLAB
FILE:
TYPICAL DETAILS PC - LEDGER 100814.dwg
REDI-ROCK
05481 US 31 SOUTH CHARLEVOIX, MI 49720
866-222-9466 • 231-237-9521 Fax • www.redi-rock.com

90° OUTSIDE CORNER DETAIL WITH SPECIALTY CORNER BLOCK

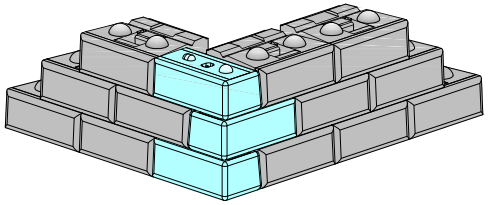

ISOMETRIC VIEW OF CORNER
(NO SCALE)

SPECIALTY CORNER BLOCK
(NO SCALE)

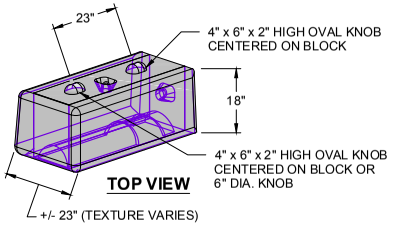

TOP VIEW

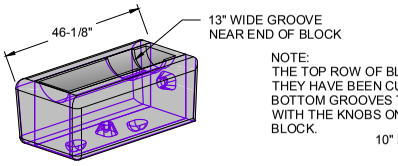

BOTTOM VIEW

NOTE:
THE TOP ROW OF BLOCKS ARE SHOWN IN RED. THEY HAVE BEEN CUTOUT IN LINE WITH THEIR BOTTOM GROOVES TO SHOW HOW THEY FIT WITH THE KNOBS ON THE BOTTOM ROW OF BLOCK.

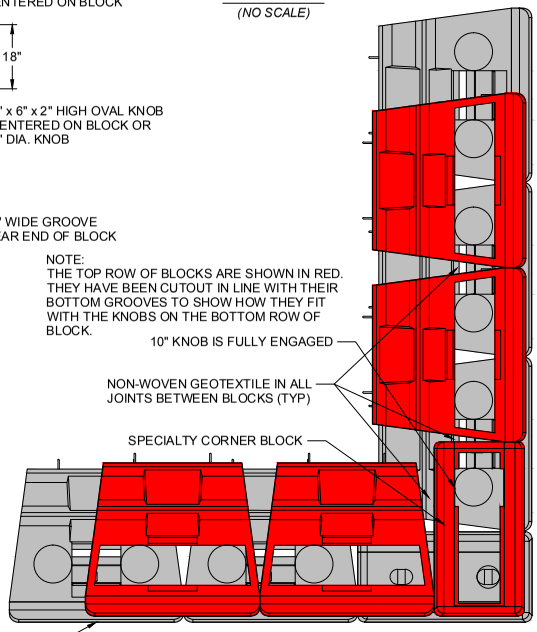

TOP VIEW OF BOTTOM TWO ROWS
(NO SCALE)

90° Inside Corner Detail

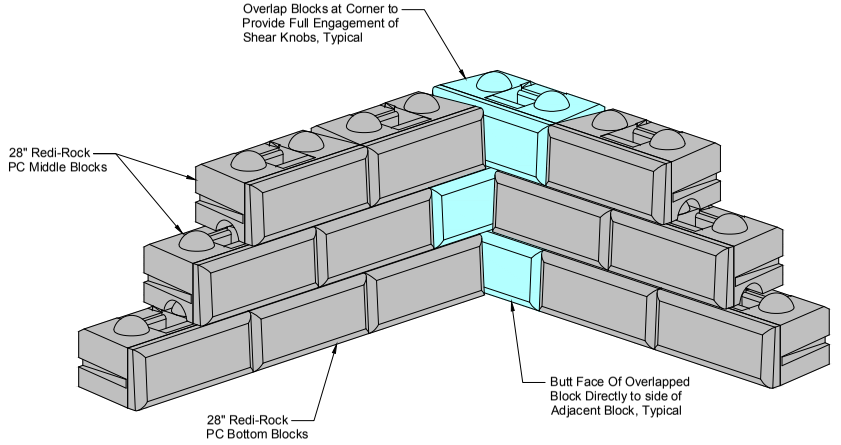

ISOMETRIC VIEW OF CORNER
(NO SCALE)

- *This drawing is for reference only.*
- ***Final designs for construction must be prepared by a registered Professional Engineer** using the actual conditions of the proposed site.*
- ***Final wall design must address both internal and external drainage and shall be evaluated by the Professional Engineer who is responsible for the wall design.***

DRAWN BY: M. WALZ 05-16-11	TITLE: REDI-ROCK PC SERIES INSIDE & OUTSIDE 90° CORNERS	REDI-ROCK	
REVISED BY: C. HINES 05-07-15		05481 US 31 SOUTH CHARLEVOIX, MI 49720	
DATE: MAY 16, 2011		866-222-8400 • 231-237-9521 Fax • www.redi-rock.com	
SHEET NO.: 6 of 17	DRAWING FILE: TYPICAL DETAILS PC - LEDGER 100814.dwg		

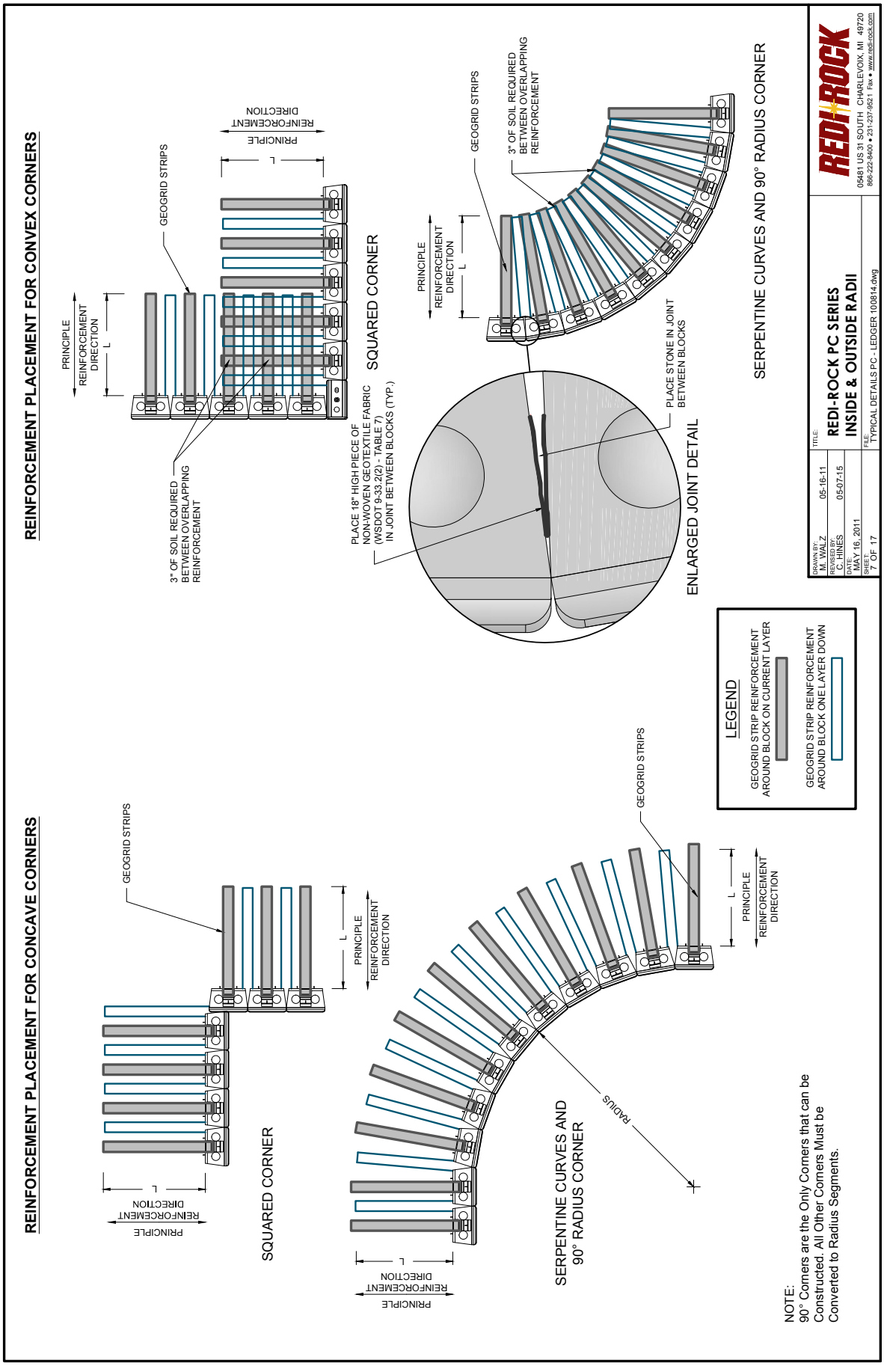
REINFORCEMENT PLACEMENT FOR CONVEX CORNERS
PRINCIPLE REINFORCEMENT DIRECTION
L
GEOGRID STRIPS
3" OF SOIL REQUIRED BETWEEN OVERLAPPING REINFORCEMENT
PLACE 18" HIGH PIECE OF NON-WOVEN GEOTEXTILE FABRIC (WSDOT 9-33.2(2) - TABLE 7) IN JOINT BETWEEN BLOCKS (TYP.)
SQUARED CORNER
PRINCIPLE REINFORCEMENT DIRECTION
L
GEOGRID STRIPS
3" OF SOIL REQUIRED BETWEEN OVERLAPPING REINFORCEMENT
PLACE STONE IN JOINT BETWEEN BLOCKS
ENLARGED JOINT DETAIL
SERPENTINE CURVES AND 90° RADIUS CORNER
REINFORCEMENT PLACEMENT FOR CONCAVE CORNERS
GEOGRID STRIPS
PRINCIPLE REINFORCEMENT DIRECTION
L
SQUARED CORNER
GEOGRID STRIPS
RADIUS
PRINCIPLE REINFORCEMENT DIRECTION
L
SERPENTINE CURVES AND 90° RADIUS CORNER
LEGEND
GEOGRID STRIP REINFORCEMENT AROUND BLOCK ON CURRENT LAYER
GEOGRID STRIP REINFORCEMENT AROUND BLOCK ONE LAYER DOWN
NOTE:
90° Corners are the Only Corners that can be Constructed. All Other Corners Must be Converted to Radius Segments.
DRAWN BY: M. WALZ 05-16-11
REVISED BY: C. HINES 05-07-15
DATE: MAY 16, 2011
SHEET 7 OF 17
TITLE: REDI-ROCK PC SERIES INSIDE & OUTSIDE RADII
FILE: TYPICAL DETAILS PC - LEDGER 100814.dwg
REDI-ROCK
05481 US 31 SOUTH CHARLEVOIX, MI 49720
866-222-8400 • 231-237-9521 Fax • www.redi-rock.com

CONVEX CURVES

NUMBER OF COURSES	HEIGHT OF BLOCKS	BOTTOM ROW MIN. RADIUS (FROM FACE OF BLOCK)	DISTANCE BETWEEN BLOCKS PER SKETCH
1	1'-6"	14'-6"	0.13"
2	3'-0"	14'-8"	0.21"
3	4'-6"	14'-10"	0.28"
4	6'-0"	15'-0"	0.36"
5	7'-6"	15'-2"	0.43"
6	9'-0"	15'-4"	0.50"
7	10'-6"	15'-6"	0.57"
8	12'-0"	15'-8"	0.63"
9	13'-6"	15'-10"	0.70"
10	15'-0"	16'-0"	0.76"
11	16'-6"	16'-2"	0.83"
12	18'-0"	16'-4"	0.88"
13	19'-6"	16'-6"	0.95"
14	21'-0"	16'-8"	1.01"

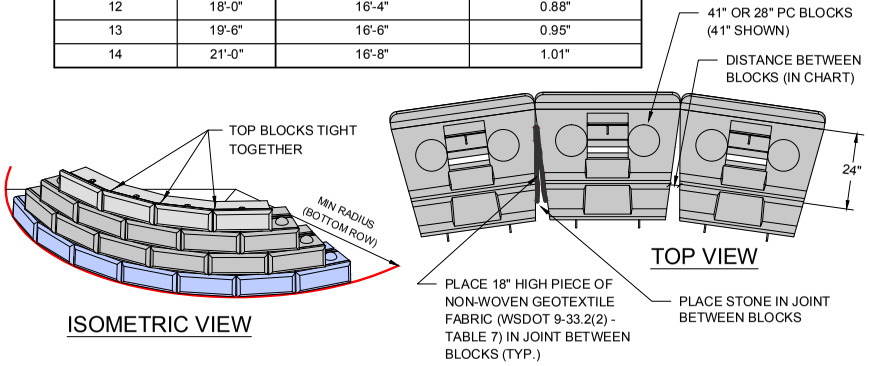

CONCAVE CURVES

NOTES:

- PLACE BLOCKS TIGHT TOGETHER
- NO MINIMUM RADIUS - BASED ONLY ON BLOCK GEOMETRY
- SMALLER RADII WILL RESULT IN MORE EXPOSED UNTEXTURED BLOCK SURFACE

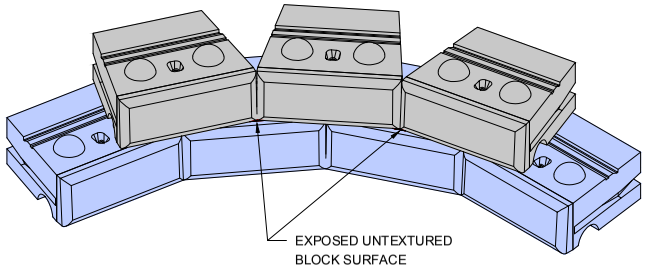

45° OUTSIDE CORNER RADIAL SOLUTION

(REDI-ROCK PC BLOCKS)

MINIMUM RADIUS AND OFFSET FOR BOTTOM ROW

NUMBER OF COURSES	HEIGHT OF BLOCKS	RADIUS FROM FACE OF BLOCK	OFFSET
1	1'-6"	14'-6"	± 14 ⅜"
2	3'-0"	14'-8"	± 14 ½"
3	4'-6"	14'-10"	± 14 ⅝"
4	6'-0"	15'-0"	± 14 ⅞"
5	7'-6"	15'-2"	± 15"
6	9'-0"	15'-4"	± 15 ⅛"
7	10'-6"	15'-6"	± 15 ⅜"
8	12'-0"	15'-8"	± 15 ½"
9	13'-6"	15'-10"	± 15 ⅝"
10	15'-0"	16'-0"	± 15 ⅞"
11	16'-6"	16'-2"	± 16"
12	18'-0"	16'-4"	± 16 ⅛"
13	19'-6"	16'-6"	± 16 ⅜"
14	21'-0"	16'-8"	± 16 ½"
15	21'-0"	16'-8"	± 16 ½"
16	21'-0"	16'-8"	± 16 ½"
17	21'-0"	16'-8"	± 16 ½"
18	21'-0"	16'-8"	± 16 ½"
19	21'-0"	16'-8"	± 16 ½"
20	21'-0"	16'-8"	± 16 ½"

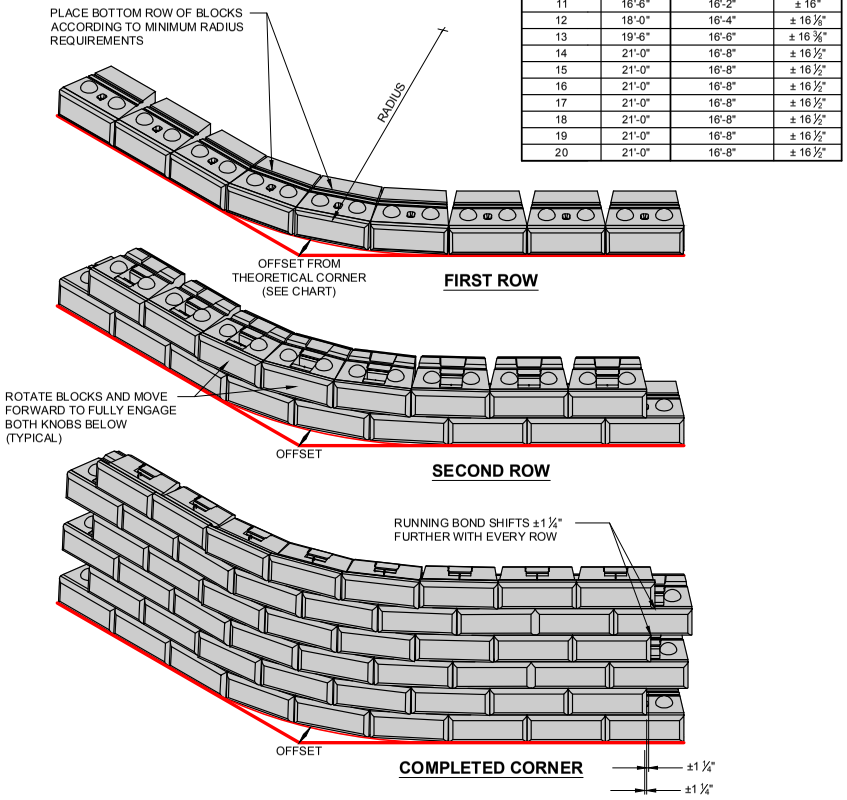

DRAWN BY: M. WALZ	05-16-11	TITLE: REDI-ROCK PC SERIES OUTSIDE CORNER RADIAL SOLUTION	REDI-ROCK
REVISED BY: C. HINES	05-07-15		05481 US 31 SOUTH CHARLEVOIX, MI 49720
DATE: MAY 16, 2011			866-222-8400 • 231-237-9521 Fax • www.redi-rock.com
SHEET: 8 OF 17		FILE: TYPICAL DETAILS PC - LEDGER 100814.dwg	

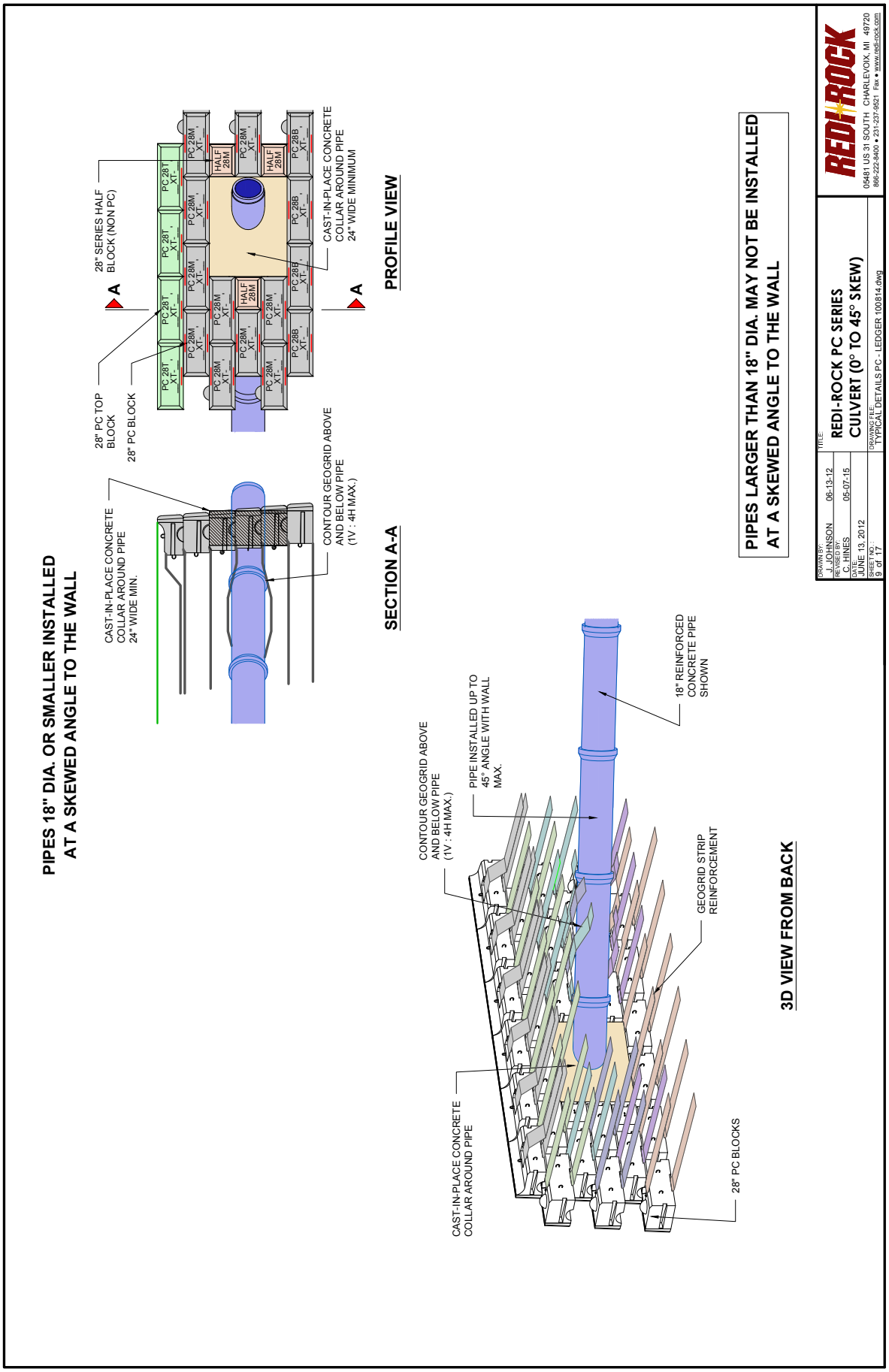
PIPES 18" DIA. OR SMALLER INSTALLED
AT A SKEWED ANGLE TO THE WALL
28" SERIES HALF BLOCK (NON PC)
A
28" PC TOP BLOCK
28" PC BLOCK
CAST-IN-PLACE CONCRETE COLLAR AROUND PIPE 24" WIDE MINIMUM
A
PROFILE VIEW
CAST-IN-PLACE CONCRETE COLLAR AROUND PIPE 24" WIDE MIN.
CONTOUR GEOGRID ABOVE AND BELOW PIPE (1V : 4H MAX.)
SECTION A-A
PIPES LARGER THAN 18" DIA. MAY NOT BE INSTALLED
AT A SKEWED ANGLE TO THE WALL
CONTOUR GEOGRID ABOVE AND BELOW PIPE (1V : 4H MAX.)
PIPE INSTALLED UP TO 45° ANGLE WITH WALL MAX.
18" REINFORCED CONCRETE PIPE SHOWN
GEOGRID STRIP REINFORCEMENT
CAST-IN-PLACE CONCRETE COLLAR AROUND PIPE
28" PC BLOCKS
3D VIEW FROM BACK
DRAWN BY: J.C. JOHNSON 06-13-12
REVISED BY: C. HINES 05-07-15
DATE: JUNE 13, 2012
SHEET NO.: 9 of 17
TITLE: REDI-ROCK PC SERIES CULVERT (0° TO 45° SKEW)
DRAWING FILE: TYPICAL DETAILS PC - LEDGER 100814.dwg
REDI-ROCK
05481 US 31 SOUTH CHARLEVOIX, MI 49720
866-222-8400 • 231-237-9521 Fax • www.redi-rock.com

LARGE OBSTRUCTION - CONCEPTUAL DETAIL

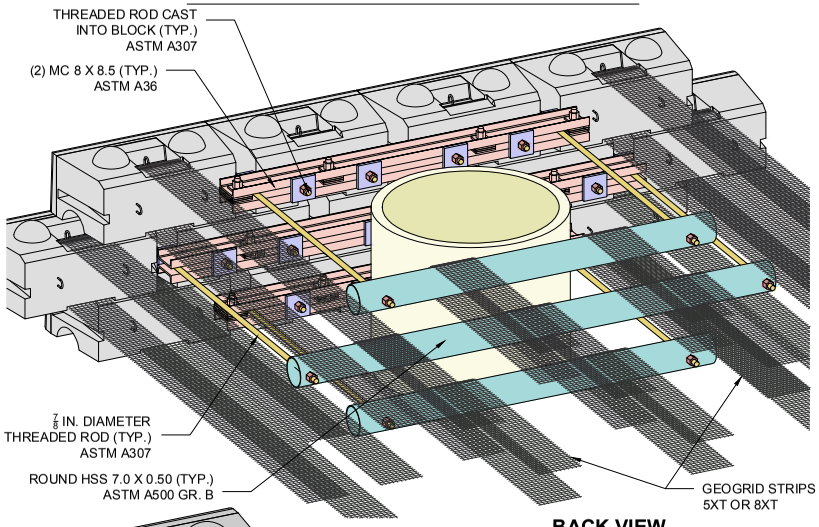

BACK VIEW

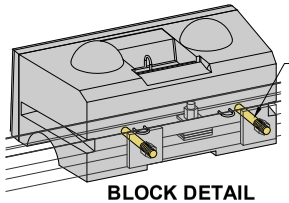

BLOCK DETAIL

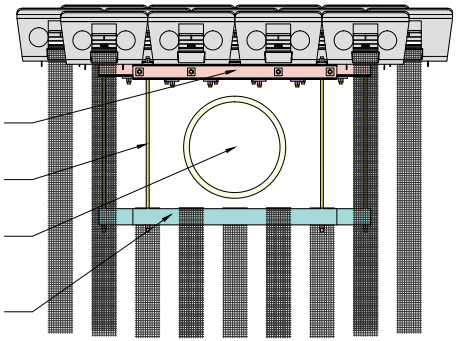

TOP VIEW

NOTE:
(1) ALL STRUCTURAL STEEL ELEMENTS TO BE HOT-DIPPED GALVANIZED IN ACCORDANCE WITH ASTM A123 COATING THICKNESS GRADE 85.
(2) THE ABOVE DETAIL IS VALID ONLY FOR OBSTRUCTIONS 84" AND SMALLER AND/OR PC WALL SECTIONS THAT DO NOT REQUIRE GEOGRID REINFORCEMENT WITH TENSILE STRENGTH HIGHER THAN 8XT.

REINFORCEMENT PLACEMENT AROUND VERTICAL OBSTRUCTIONS
With the Redi-Rock PC Series

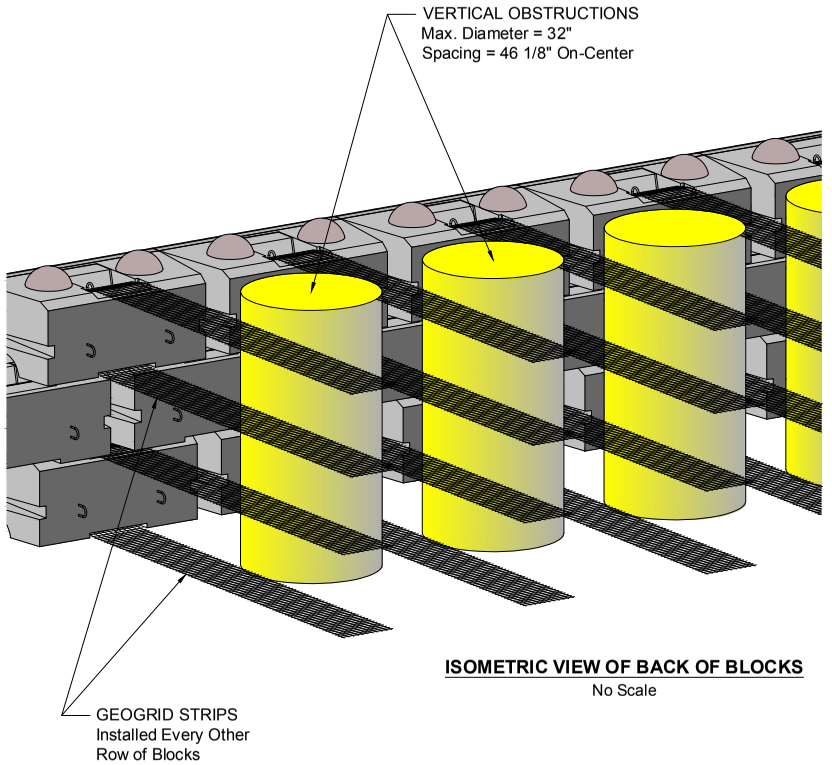

ISOMETRIC VIEW OF BACK OF BLOCKS
No Scale

DRAWN BY: M. WALZ 05-16-11	TITLE: REDI-ROCK PC SERIES VERTICAL OBSTRUCTIONS	REDI ROCK	
REVISED BY: C. HINES 05-07-15		05481 US 31 SOUTH CHARLEVOIX, MI 49720	
DATE: MAY 16, 2011		866-222-8400 • 231-237-9521 Fax • www.redi-rock.com	
SHEET NO.: 10 of 17	DRAWING FILE: TYPICAL DETAILS PC - LEDGER100814.dwg		

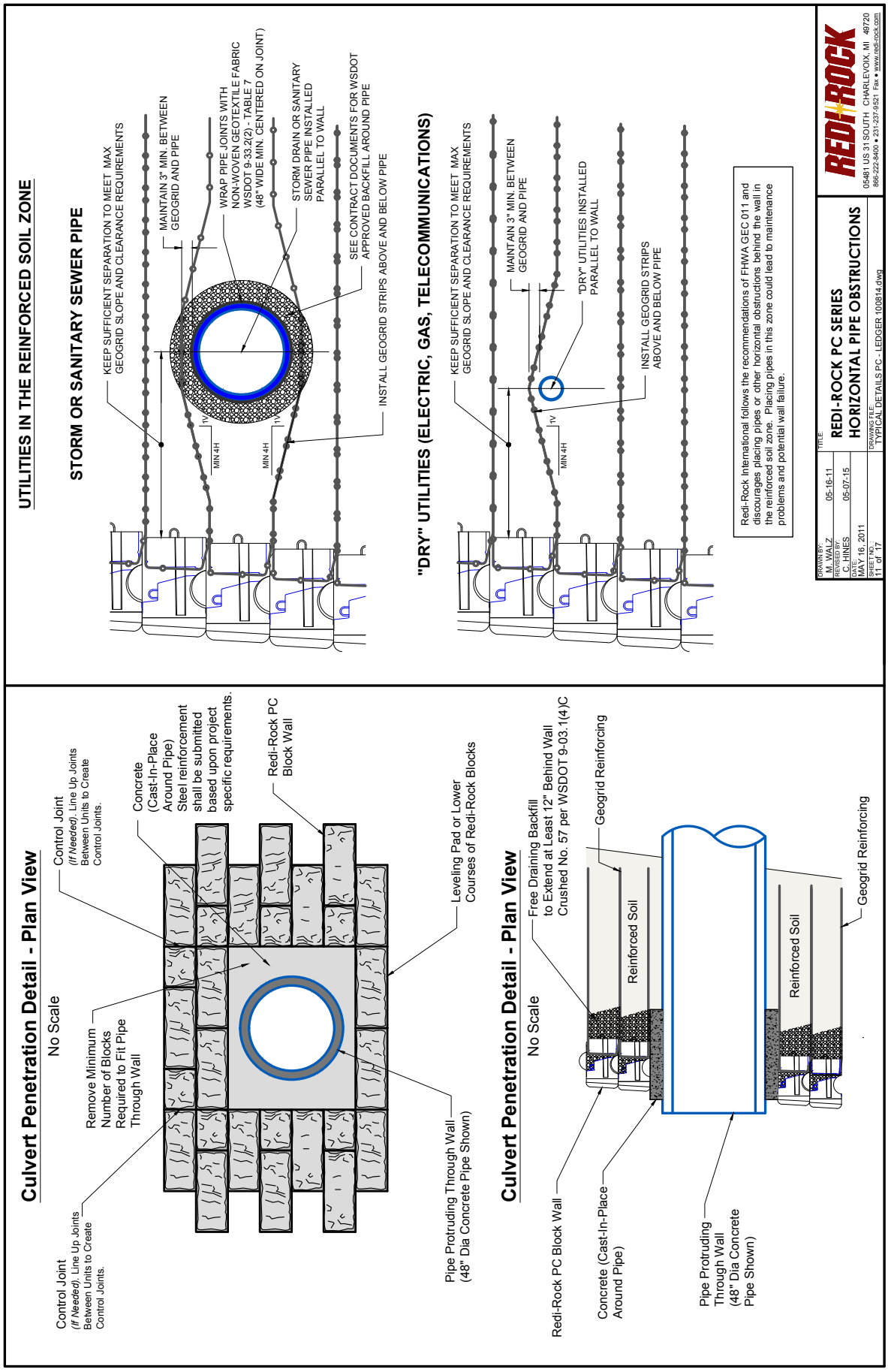
UTILITIES IN THE REINFORCED SOIL ZONE
STORM OR SANITARY SEWER PIPE
KEEP SUFFICIENT SEPARATION TO MEET MAX GEOGRID SLOPE AND CLEARANCE REQUIREMENTS
MAINTAIN 3" MIN. BETWEEN GEOGRID AND PIPE
WRAP PIPE JOINTS WITH NON-WOVEN GEOTEXTILE FABRIC WSDOT 9-33.2(2) - TABLE 7 (48" WIDE MIN. CENTERED ON JOINT)
STORM DRAIN OR SANITARY SEWER PIPE INSTALLED PARALLEL TO WALL
SEE CONTRACT DOCUMENTS FOR WSDOT APPROVED BACKFILL AROUND PIPE
INSTALL GEOGRID STRIPS ABOVE AND BELOW PIPE
1V
MIN 4H
"DRY" UTILITIES (ELECTRIC, GAS, TELECOMMUNICATIONS)
KEEP SUFFICIENT SEPARATION TO MEET MAX GEOGRID SLOPE AND CLEARANCE REQUIREMENTS
MAINTAIN 3" MIN. BETWEEN GEOGRID AND PIPE
"DRY" UTILITIES INSTALLED PARALLEL TO WALL
INSTALL GEOGRID STRIPS ABOVE AND BELOW PIPE
Redi-Rock International follows the recommendations of FHWA GEC 011 and discourages placing pipes or other horizontal obstructions behind the wall in the reinforced soil zone. Placing pipes in this zone could lead to maintenance problems and potential wall failure.
DRAWN BY: M. WALZ 05-16-11
REVISED BY: C. HINES 05-07-15
DATE: MAY 16, 2011
SHEET NO. 11 of 17
TITLE
REDI-ROCK PC SERIES
HORIZONTAL PIPE OBSTRUCTIONS
DRAWING FILE: TYPICAL DETAILS PC - LEDGER 100814.dwg
REDI ROCK
05461 US 31 SOUTH CHARLEVOIX, MI 49720
866-222-9400 • 231-237-9521 Fax • www.redi-rock.com
Culvert Penetration Detail - Plan View
No Scale
Control Joint (If Needed), Line Up Joints Between Units to Create Control Joints.
Concrete (Cast-In-Place Around Pipe) Steel reinforcement shall be submitted based upon project specific requirements.
Redi-Rock PC Block Wall
Remove Minimum Number of Blocks Required to Fit Pipe Through Wall
Leveling Pad or Lower Courses of Redi-Rock Blocks
Pipe Protruding Through Wall (48" Dia Concrete Pipe Shown)
Culvert Penetration Detail - Plan View
No Scale
Free Draining Backfill to Extend at Least 12" Behind Wall Crushed No. 57 per WSDOT 9-03.1(4)C
Geogrid Reinforcing
Reinforced Soil
Redi-Rock PC Block Wall
Concrete (Cast-In-Place Around Pipe)
Pipe Protruding Through Wall (48" Dia Concrete Pipe Shown)
Geogrid Reinforcing

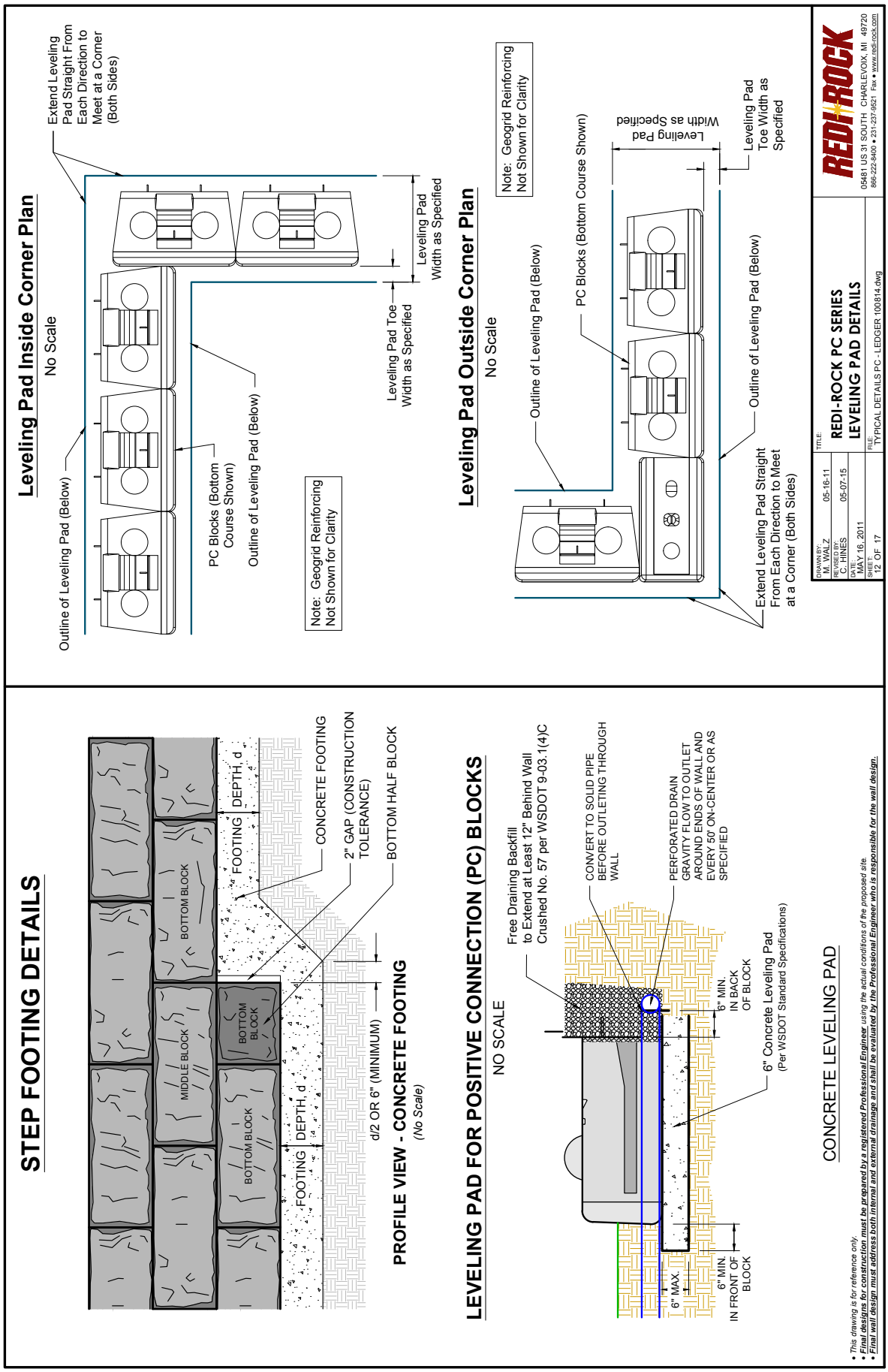
Leveling Pad Inside Corner Plan
No Scale
Outline of Leveling Pad (Below)
Extend Leveling Pad Straight From Each Direction to Meet at a Corner (Both Sides)
PC Blocks (Bottom Course Shown)
Outline of Leveling Pad (Below)
Leveling Pad Toe Width as Specified
Leveling Pad Width as Specified
Note: Geogrid Reinforcing Not Shown for Clarity
Leveling Pad Outside Corner Plan
No Scale
Note: Geogrid Reinforcing Not Shown for Clarity
Outline of Leveling Pad (Below)
PC Blocks (Bottom Course Shown)
Leveling Pad Width as Specified
Leveling Pad Toe Width as Specified
Outline of Leveling Pad (Below)
Extend Leveling Pad Straight From Each Direction to Meet at a Corner (Both Sides)
DRAWN BY: M. WALZ 05-16-11
REVISED BY: C. HINES 05-07-15
DATE: MAY 16, 2011
SHEET: 12 OF 17
TITLE: REDI-ROCK PC SERIES LEVELING PAD DETAILS
FILE: TYPICAL DETAILS PC - LEDGER 100814.dwg
REDI-ROCK
05481 US 31 SOUTH CHARLEVOIX, MI 49720
866-222-8400 • 231-237-9521 Fax • www.redi-rock.com
STEP FOOTING DETAILS
BOTTOM BLOCK
MIDDLE BLOCK
BOTTOM BLOCK
BOTTOM BLOCK
FOOTING
DEPTH, d
FOOTING
DEPTH, d
CONCRETE FOOTING
2" GAP (CONSTRUCTION TOLERANCE)
BOTTOM HALF BLOCK
d/2 OR 6" (MINIMUM)
PROFILE VIEW - CONCRETE FOOTING
(No Scale)
LEVELING PAD FOR POSITIVE CONNECTION (PC) BLOCKS
NO SCALE
Free Draining Backfill to Extend at Least 12" Behind Wall Crushed No. 57 per WSDOT 9-03.1(4)C
CONVERT TO SOLID PIPE BEFORE OUTLETING THROUGH WALL
PERFORATED DRAIN GRAVITY FLOW TO OUTLET AROUND ENDS OF WALL AND EVERY 50' ON-CENTER OR AS SPECIFIED
6" MIN. IN BACK OF BLOCK
6" Concrete Leveling Pad (Per WSDOT Standard Specifications)
6" MAX.
6" MIN. IN FRONT OF BLOCK
CONCRETE LEVELING PAD
• This drawing is for reference only.
• Final designs for construction must be prepared by a registered Professional Engineer using the actual conditions of the proposed site.
• Final wall design must address both internal and external drainage and shall be evaluated by the Professional Engineer who is responsible for the wall design.

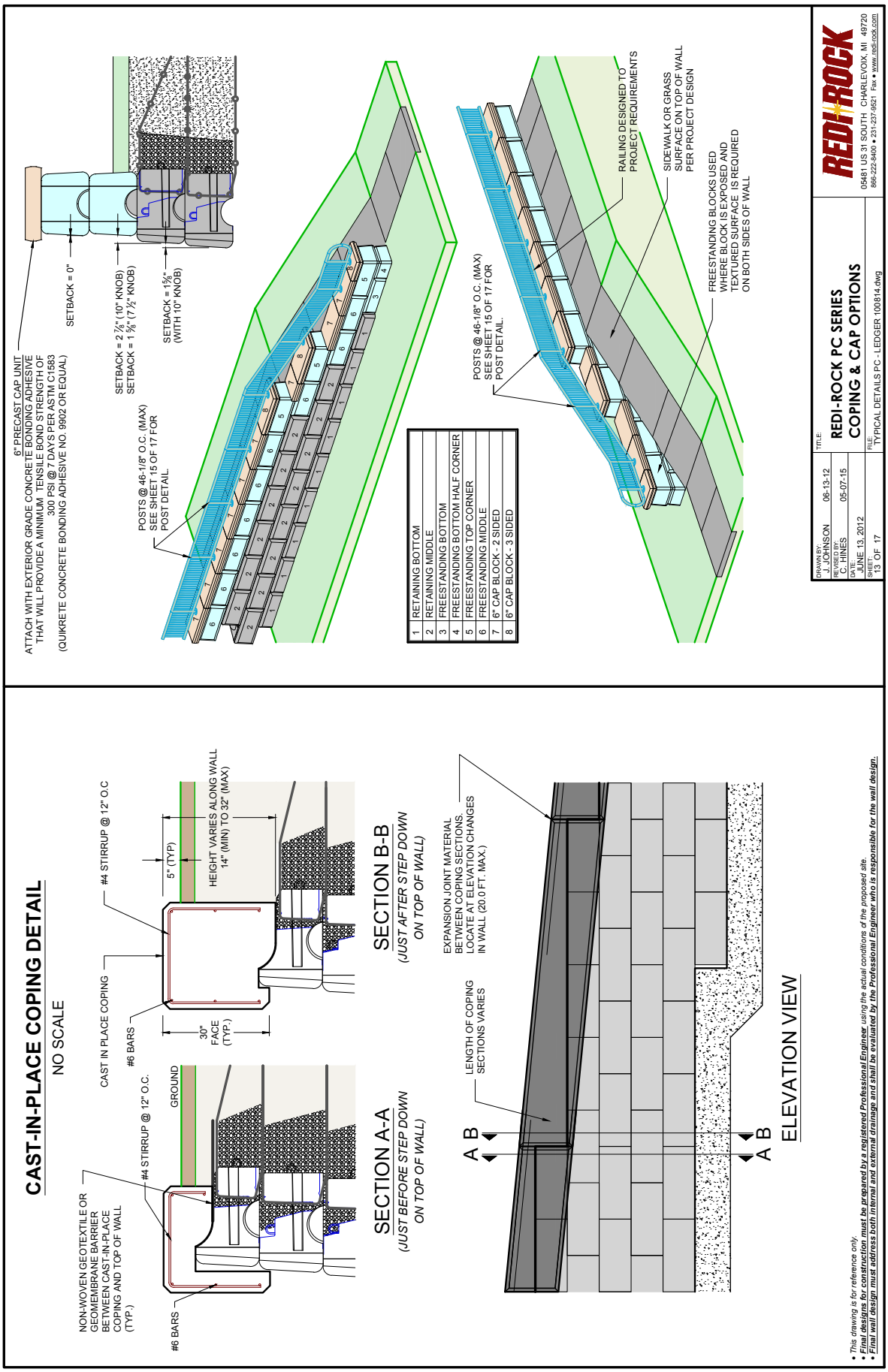
6" PRECAST CAP UNIT
ATTACH WITH EXTERIOR GRADE CONCRETE BONDING ADHESIVE THAT WILL PROVIDE A MINIMUM TENSILE BOND STRENGTH OF 300 PSI @ 7 DAYS PER ASTM C1583
(QUIKRETE CONCRETE BONDING ADHESIVE NO. 9902 OR EQUAL)
SETBACK = 0"
SETBACK = 2 7/8" (10" KNOB)
SETBACK = 1 3/8" (7 1/2" KNOB)
SETBACK = 1 3/8" (WITH 10" KNOB)
POSTS @ 46-1/8" O.C. (MAX)
SEE SHEET 15 OF 17 FOR
POST DETAIL
1 RETAINING BOTTOM
2 RETAINING MIDDLE
3 FREESTANDING BOTTOM
4 FREESTANDING BOTTOM HALF CORNER
5 FREESTANDING TOP CORNER
6 FREESTANDING MIDDLE
7 6" CAP BLOCK - 2 SIDED
8 6" CAP BLOCK - 3 SIDED
POSTS @ 46-1/8" O.C. (MAX)
SEE SHEET 15 OF 17 FOR
POST DETAIL.
RAILING DESIGNED TO PROJECT REQUIREMENTS
SIDEWALK OR GRASS SURFACE ON TOP OF WALL PER PROJECT DESIGN
FREESTANDING BLOCKS USED WHERE BLOCK IS EXPOSED AND TEXTURED SURFACE IS REQUIRED ON BOTH SIDES OF WALL
DRAWN BY: J. JOHNSON 06-13-12
REVISED BY: C. HINES 05-07-15
DATE: JUNE 13, 2012
SHEET: 13 OF 17
TITLE: REDI-ROCK PC SERIES COPING & CAP OPTIONS
FILE: TYPICAL DETAILS PC - LEDGER 100814.dwg
REDI-ROCK
05481 US 31 SOUTH CHARLEVOIX, MI 49720
866-226-8400 • 231-237-3521 Fax • www.redi-rock.com
CAST-IN-PLACE COPING DETAIL
NO SCALE
NON-WOVEN GEOTEXTILE OR GEOMEMBRANE BARRIER BETWEEN CAST-IN-PLACE COPING AND TOP OF WALL (TYP.)
#4 STIRRUP @ 12" O.C.
GROUND
#6 BARS
CAST IN PLACE COPING
#4 STIRRUP @ 12" O.C
5" (TYP)
HEIGHT VARIES ALONG WALL 14" (MIN) TO 32" (MAX)
#6 BARS
30" FACE (TYP.)
SECTION A-A
(JUST BEFORE STEP DOWN ON TOP OF WALL)
SECTION B-B
(JUST AFTER STEP DOWN ON TOP OF WALL)
LENGTH OF COPING SECTIONS VARIES
EXPANSION JOINT MATERIAL BETWEEN COPING SECTIONS. LOCATE AT ELEVATION CHANGES IN WALL (20.0 FT. MAX.)
A B
A B
ELEVATION VIEW
• This drawing is for reference only.
• Final designs for construction must be prepared by a registered Professional Engineer using the actual conditions of the proposed site.
• Final design must address both internal and external drainage and shall be evaluated by the Professional Engineer who is responsible for the wall design.

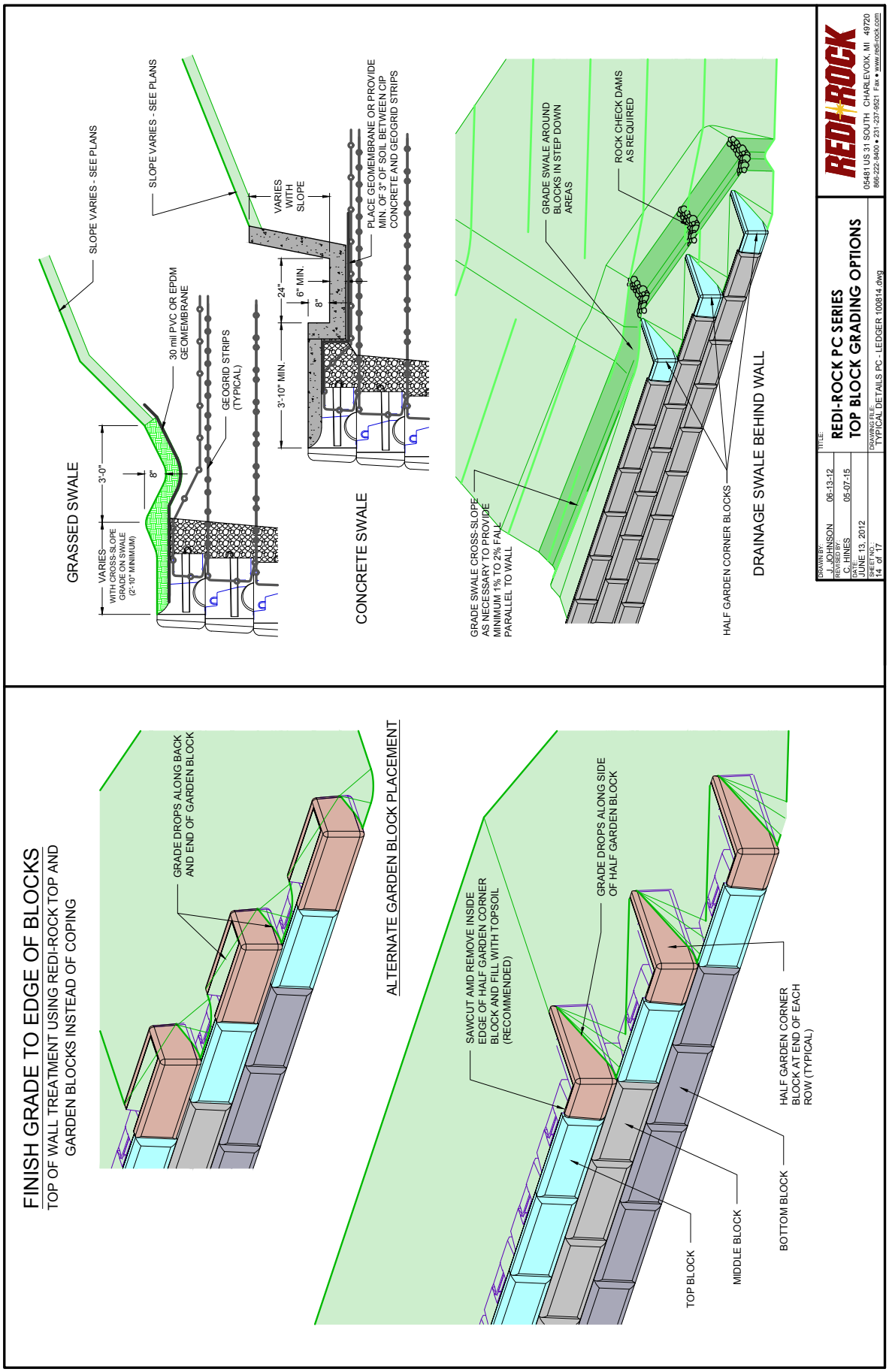
GRASSED SWALE
SLOPE VARIES - SEE PLANS
VARIES WITH CROSS-SLOPE GRADE ON SWALE (2'-10" MINIMUM)
3'-0"
8"
30 mil PVC OR EPDM GEOMEMBRANE
GEOGRID STRIPS (TYPICAL)
CONCRETE SWALE
SLOPE VARIES - SEE PLANS
VARIES WITH SLOPE
24"
6" MIN.
8"
3'-10" MIN.
PLACE GEOMEMBRANE OR PROVIDE MIN. OF 3" OF SOIL BETWEEN CIP CONCRETE AND GEOGRID STRIPS
DRAINAGE SWALE BEHIND WALL
GRADE SWALE AROUND BLOCKS IN STEP DOWN AREAS
ROCK CHECK DAMS AS REQUIRED
GRADE SWALE CROSS-SLOPE AS NECESSARY TO PROVIDE MINIMUM 1% TO 2% FALL PARALLEL TO WALL
HALF GARDEN CORNER BLOCKS
FINISH GRADE TO EDGE OF BLOCKS
TOP OF WALL TREATMENT USING REDI-ROCK TOP AND GARDEN BLOCKS INSTEAD OF COPING
GRADE DROPS ALONG BACK AND END OF GARDEN BLOCK
ALTERNATE GARDEN BLOCK PLACEMENT
SAWCUT AMD REMOVE INSIDE EDGE OF HALF GARDEN CORNER BLOCK AND FILL WITH TOPSOIL (RECOMMENDED)
GRADE DROPS ALONG SIDE OF HALF GARDEN BLOCK
HALF GARDEN CORNER BLOCK AT END OF EACH ROW (TYPICAL)
TOP BLOCK
MIDDLE BLOCK
BOTTOM BLOCK
DRAWN BY: T. JOHNSON 06-13-12
REVISED BY: C. HINES 05-07-15
DATE: JUNE 13, 2012
SHEET NO.: 14 of 17
TITLE: REDI-ROCK PC SERIES TOP BLOCK GRADING OPTIONS
DRAWING FILE: TYPICAL DETAILS PC - LEDGER 100814.dwg
REDI-ROCK
05481 US 31 SOUTH CHARLEVOIX, MI 49720
866-222-8400 • 231-237-9521 Fax • www.redi-rock.com

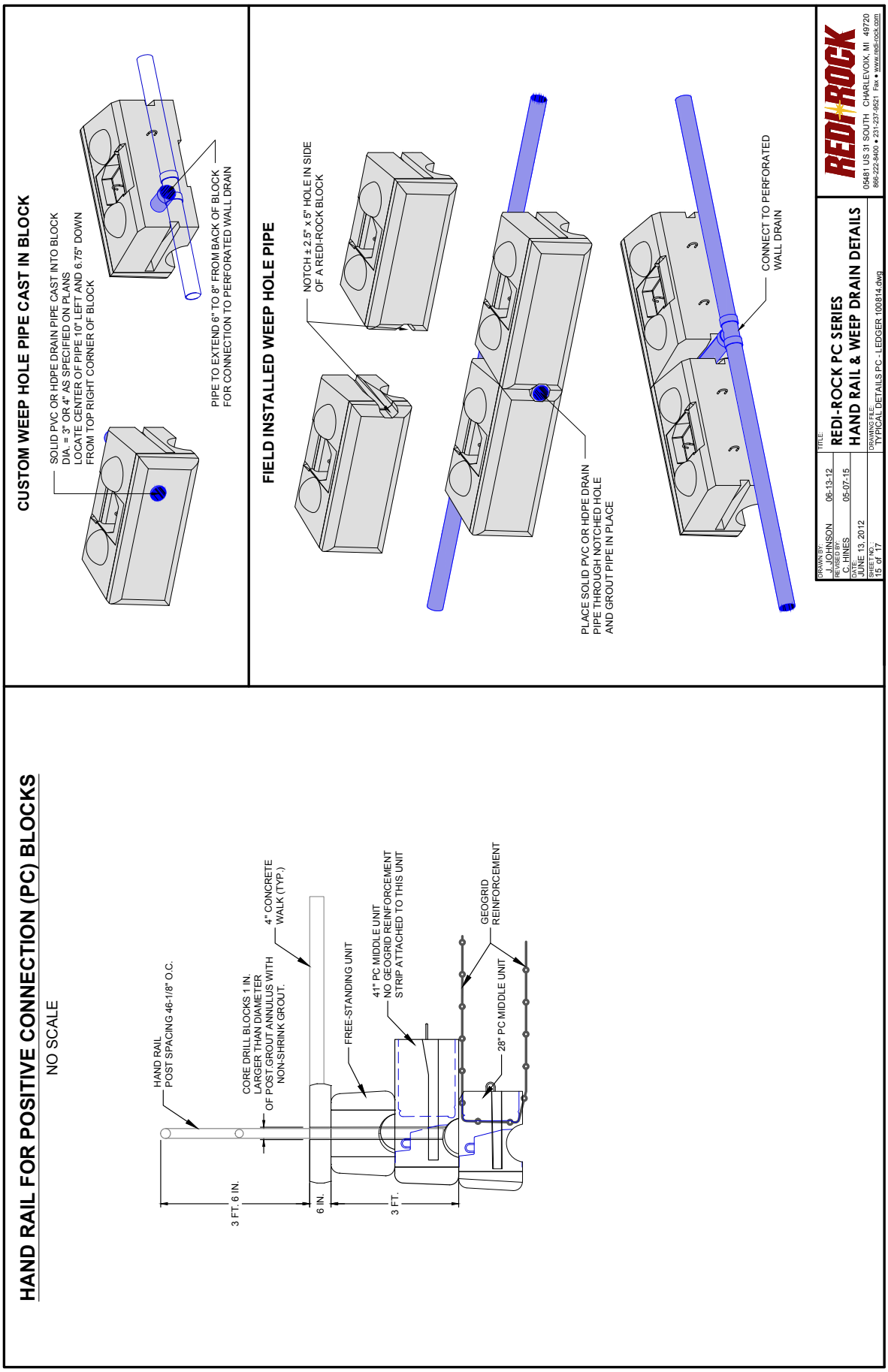
CUSTOM WEEP HOLE PIPE CAST IN BLOCK
SOLID PVC OR HDPE DRAIN PIPE CAST INTO BLOCK
DIA. = 3" OR 4" AS SPECIFIED ON PLANS
LOCATE CENTER OF PIPE 10" LEFT AND 6.75" DOWN
FROM TOP RIGHT CORNER OF BLOCK
PIPE TO EXTEND 6" TO 8" FROM BACK OF BLOCK
FOR CONNECTION TO PERFORATED WALL DRAIN
FIELD INSTALLED WEEP HOLE PIPE
NOTCH ± 2.5" x 5" HOLE IN SIDE
OF A REDI-ROCK BLOCK
PLACE SOLID PVC OR HDPE DRAIN
PIPE THROUGH NOTCHED HOLE
AND GROUT PIPE IN PLACE
CONNECT TO PERFORATED
WALL DRAIN
DRAWN BY: J. JOHNSON 06-13-12
REVISED BY: C. HINES 05-07-15
DATE: JUNE 13, 2012
SHEET NO.: 15 of 17
TITLE:
REDI-ROCK PC SERIES
HAND RAIL & WEEP DRAIN DETAILS
DRAWING FILE:
TYPICAL DETAILS PC - LEDGER 100814.dwg
REDI-ROCK
0548 I US 31 SOUTH CHARLEVOIX, MI 49720
866-222-9400 • 231-237-9621 Fax • www.redi-rock.com
HAND RAIL FOR POSITIVE CONNECTION (PC) BLOCKS
NO SCALE
HAND RAIL
POST SPACING 46-1/8" O.C.
CORE DRILL BLOCKS 1 IN.
LARGER THAN DIAMETER
OF POST GROUT ANNULUS WITH
NON-SHRINK GROUT.
4" CONCRETE
WALK (TYP.)
FREE-STANDING UNIT
41" PC MIDDLE UNIT
NO GEOGRID REINFORCEMENT
STRIP ATTACHED TO THIS UNIT
GEOGRID
REINFORCEMENT
28" PC MIDDLE UNIT
3 FT. 6 IN.
6 IN.
3 FT.

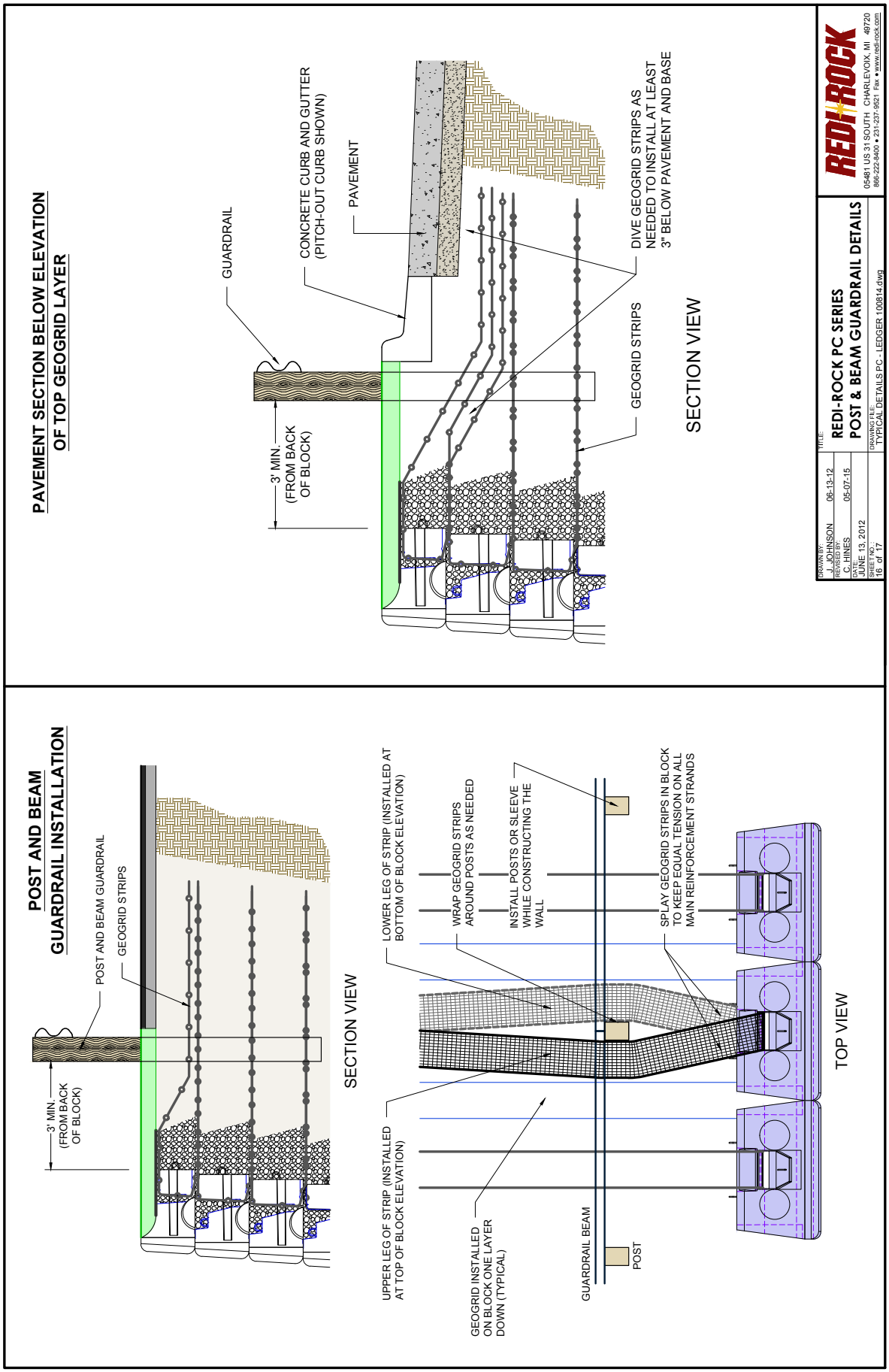
PAVEMENT SECTION BELOW ELEVATION
OF TOP GEOGRID LAYER
GUARDRAIL
CONCRETE CURB AND GUTTER
(PITCH-OUT CURB SHOWN)
PAVEMENT
DIVE GEOGRID STRIPS AS
NEEDED TO INSTALL AT LEAST
3" BELOW PAVEMENT AND BASE
3' MIN.
(FROM BACK
OF BLOCK)
GEOGRID STRIPS
SECTION VIEW
DRAWN BY: J. JOHNSON 06-13-12
REVISED BY: C. HINES 05-07-15
DATE: JUNE 13, 2012
SHEET NO.: 16 of 17
TITLE: REDI-ROCK PC SERIES
POST & BEAM GUARDRAIL DETAILS
DRAWING FILE: TYPICAL DETAILS PC - LEDGER 100814.dwg
REDI-ROCK
05481 US 31 SOUTH CHARLEVOIX, MI 49720
866-222-9400 • 231-237-9521 Fax • www.redi-rock.com
POST AND BEAM
GUARDRAIL INSTALLATION
POST AND BEAM GUARDRAIL
GEOGRID STRIPS
3' MIN
(FROM BACK
OF BLOCK)
SECTION VIEW
LOWER LEG OF STRIP (INSTALLED AT
BOTTOM OF BLOCK ELEVATION)
WRAP GEOGRID STRIPS
AROUND POSTS AS NEEDED
INSTALL POSTS OR SLEEVE
WHILE CONSTRUCTING THE
WALL
SPLAY GEOGRID STRIPS IN BLOCK
TO KEEP EQUAL TENSION ON ALL
MAIN REINFORCEMENT STRANDS
UPPER LEG OF STRIP (INSTALLED
AT TOP OF BLOCK ELEVATION)
GEOGRID INSTALLED
ON BLOCK ONE LAYER
DOWN (TYPICAL)
GUARDRAIL BEAM
POST
TOP VIEW

REDI-ROCK PC CAP & CORNER UNIT BLOCKS

Two-Sided Cap
Volume = 4.50 cft
Weight = ±644 lbs

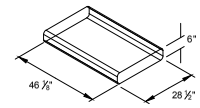

Two-Sided Curve Cap
Volume = 4.25 cft
Weight = ±608 lbs

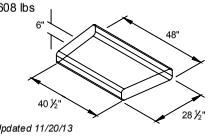

Dimensions Updated 11/20/13

Three-Sided Cap
Volume = 4.68 cft
Weight = ±669 lbs

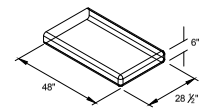

Four-Sided Cap
Volume = 4.81 cft
Weight = ±688 lbs

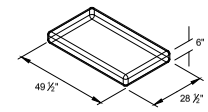

Two-Sided Half
Volume = 2.25 cft
Weight = ±322 lbs

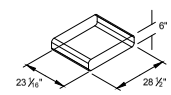

Three-Sided Half
Volume = 2.43 cft
Weight = ±347 lbs

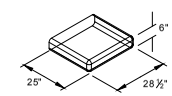

Garden Corner
Volume = 8.26 cft
Weight = ±1182 lbs

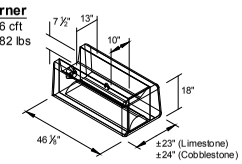

Half Garden Corner
Volume = 4.25 cft
Weight = ±607 lbs

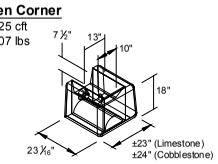

NOTES:

Volume is based on the blocks as shown.
Actual weights and volumes may vary.
Weight shown is based on 143 pcf concrete.

DRAWN BY: C. HINES 05-07-15 REVISED BY: DATE: OCTOBER 8, 2014 SHEET NO.: 17 of 17	TITLE: REDI-ROCK PC SERIES CAP AND CORNER COMPONENT DETAILS DRAWING FILE: TYPICAL DETAILS PC - LEDGER 100814.dwg	REDI-ROCK 05481 US 31 SOUTH CHARLEVOIX, MI 49720 866-222-8400 • 231-237-9521 Fax • www.redi-rock.com

Appendix 15-R Preapproved Wall Appendix: Specific Requirements and Details for Lock and Load Walls

In addition to the general design requirements provided in Appendix 15-A, the following specific requirements apply:

Facing System – The wall shall be designed as a wrapped face wall system. The concrete counterfort that attaches to the facing panel shall penetrate through the geogrid reinforcement by only cutting transverse ribs as necessary to allow the counterfort to connect to the facing panel, as shown in the preapproved plans. The wall facing design shall demonstrate that the facing panel plus counterfort is stable for all limit states in accordance with the AASHTO LRFD Bridge Design Specifications, the *Bridge Design Manual* M 23-50, and the *Geotechnical Design Manual*.

Soil Reinforcement – Only geosynthetic reinforcement listed in the QPL shall be used. The ultimate and long-term design strengths specified in Appendix D of the QPL shall be used.

Reinforcement pullout shall be calculated based on the default values for geogrid reinforcement provided in the AASHTO Specifications.

The Lock and Load Wall system shall only be used at locations where the wall will be above the water table.

Approved details for the Lock and Load wall system are provided in the following plan sheets. Exceptions and additional requirements regarding these approved details are as follows:

- WSDOT standard materials, including backfill used for the wall, shall be used where possible. With regard to the wall backfill, the entire reinforced zone for the wall shall be backfilled with WSDOT Gravel Borrow, not just the area shown in the plans (i.e., sheet 2). Where “filter fabric” is specified in the preapproved plans, it shall be a WSDOT Standard Specification Construction Geotextile for Underground Drainage material (Section 9-33).

LOCK+LOAD™

WSDOT

LOCK+LOAD LIFT ASSEMBLY DETAIL

(1) SET COUNTERFORT AND PANEL ON COMPLETED LIFT.

(2) UNROLL GEOGRID REINFORCEMENT AND POSITION IT SO THAT THE TAIL DRAPES OVER THE FACING PANEL. CUT GEOGRID ON BOTH SIDES OF EACH COUNTERFORT ONLY, AND TUCK IN SLACK GEOGRID (SEE AXON VIEW), CUT ONLY GEOGRID STRANDS THAT RUN PARALLEL TO WALL FACE AND CROSS OVER COUNTERFORT.

PLACE BACK FILL IN A WINDROW SLIGHTLY GREATER THAN FULL LIFT AGAINST LOCK + LOAD PANEL TO HOLD GEOGRID IN PLACE.

ROLL GRID INTO PLACE. STAKE OR HOLD THE GEOGRID TAUT AND FREE OF WRINKLES WHILE PLACING BACKFILL. 12 INCHES AT BACK OF PANEL AND 8 INCHES OVER THE TAIL OF THE COUNTERFORT BACK.

(3) PLACE THE GEOGROD TAIL OVER THE WINDROW, SLOPE TAIL TO TOP OF REAR OF COUNTERFORT. LOCK INTO PLACE WITH BACKFILL.

ENTIRE REINFORCED ZONE TO BE COMPACTED TO WSDOT STANDARD SPECIFICATION FOR MSE REINFORCED ZONE.

(1)
GEO GRID
SPECIFIED BACKFILL
GAVEL BARROW, WSDOT SPEC 9-03.14(4) ¾" MAX PARTICAL SIZE 18" AVERAGE DEPTH (MIN)
PANEL

(2)
GEOGRID ROLLED UP BEHIND COUNTERFORT TO PROTECT GEOGRID WHILE COUNTERFORT BACKFILL IS PLACED.
GEO GRID
MINIMUM OVERLAP 4 FEET
PANEL

(3)
GEO GRID TAIL MINIMUM OVERLAP 4 FEET COMPACTED IN BACKFILL
BACK FILL IN COMPACTED LIFTS
PANEL

(4)
FINISHED LOCK+LOAD COURSE INSTALLATION
PANEL

REV #	DESCRIPTION	DATE

LOCK+LOAD™ RETAINING WALL SYSTEMS
1681 CHESTNUT STREET, SUITE 400, VANCOUVER, B.C. V6J 4M6
T 1-800-940-7324 (604) 732-4620 F (604) 732-4621 www.lock-load.com

CONSTRUCTION	GEO WRAP WALL W / LOCK+LOAD
ROCKERY NAME	TYPICAL DETAILS
LOCATION	COUNTRY
DRAWN BY	KJA
DESIGNED BY	RC/DA
SCALE	N.T.S.
OUR PROJECT NUMBER	
CUSTOMER DRAWING	
DATE	10/6/12
	PREPARED FOR
	OUR DRAWING NUMBER
	LL-WSDOT-1A-GEO-A1

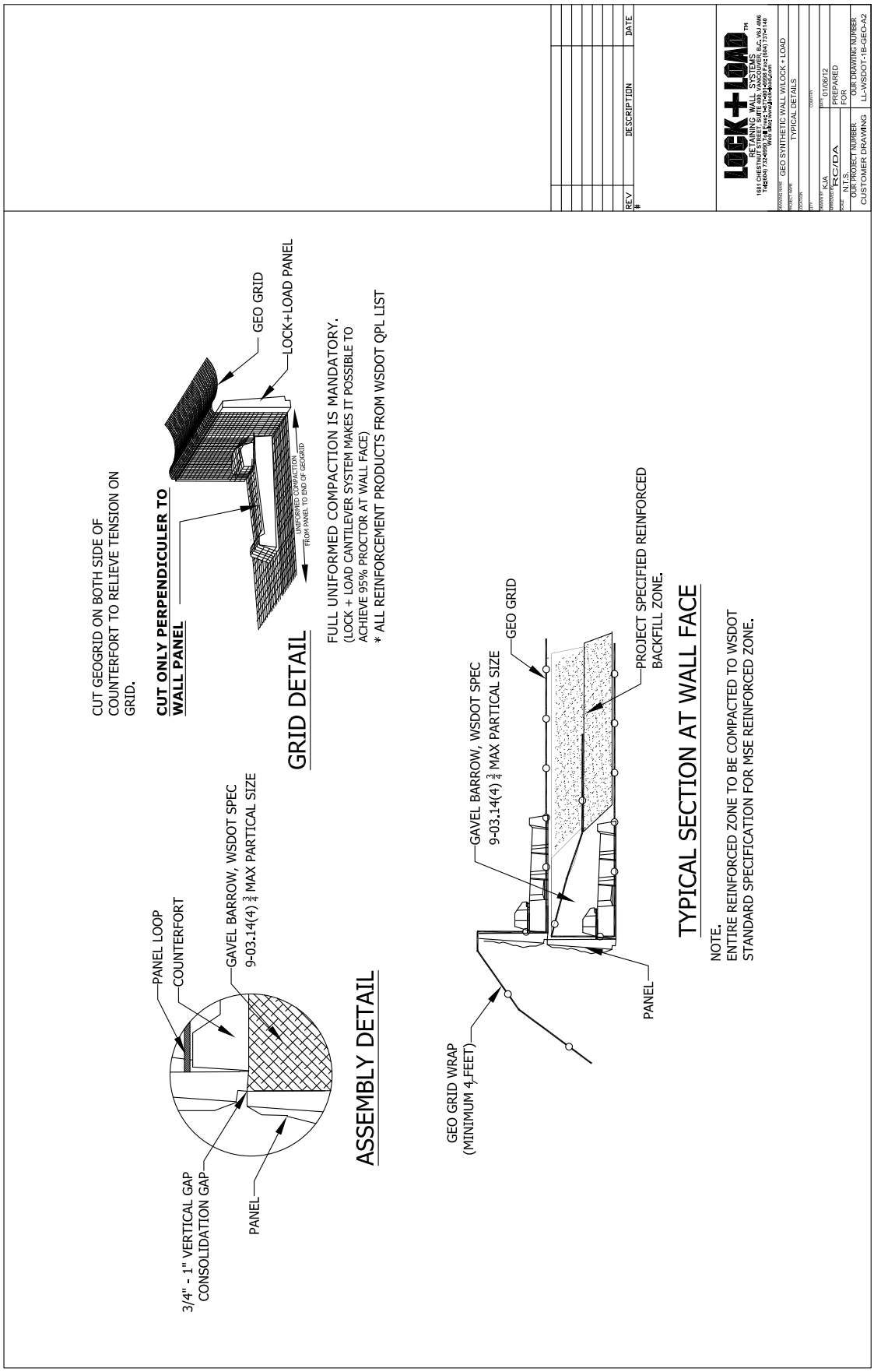
CUT GEOGRID ON BOTH SIDE OF COUNTERFORT TO RELIEVE TENSION ON GRID.
CUT ONLY PERPENDICULER TO WALL PANEL
GEO GRID
LOCK+LOAD PANEL
UNIFORMED COMPACTION FROM PANEL TO END OF GEOGRID
GRID DETAIL
FULL UNIFORMED COMPACTION IS MANDATORY.
(LOCK + LOAD CANTILEVER SYSTEM MAKES IT POSSIBLE TO ACHIEVE 95% PROCTOR AT WALL FACE)
* ALL REINFORCEMENT PRODUCTS FROM WSDOT QPL LIST
PANEL LOOP
COUNTERFORT
GAVEL BARROW, WSDOT SPEC 9-03.14(4) ¾ MAX PARTICAL SIZE
3/4" - 1" VERTICAL GAP CONSOLIDATION GAP
PANEL
ASSEMBLY DETAIL
GAVEL BARROW, WSDOT SPEC 9-03.14(4) ¾ MAX PARTICAL SIZE
GEO GRID
PROJECT SPECIFIED REINFORCED BACKFILL ZONE.
GEO GRID WRAP (MINIMUM 4 FEET)
PANEL
TYPICAL SECTION AT WALL FACE
NOTE.
ENTIRE REINFORCED ZONE TO BE COMPACTED TO WSDOT STANDARD SPECIFICATION FOR MSE REINFORCED ZONE.
REV #
DESCRIPTION
DATE
LOCK+LOAD
RETAINING WALL SYSTEMS
1681 CHESTNUT STREET, VANCOUVER, B.C. V6J 4M6
T 1(604) 732-9999 | F 1(877)-732-9998
DRAWING NAME GEO SYNTHETIC WALL W/LOCK + LOAD
PROJECT NAME TYPICAL DETAILS
DESIGNED BY KJA
DRAWN BY RC/DA
SCALE N.T.S.
DATE 01/06/12
PREPARED FOR
OUR PROJECT NUMBER
CUSTOMER DRAWING
OUR DRAWING NUMBER
LL-WSDOT-1B-GEO-A2

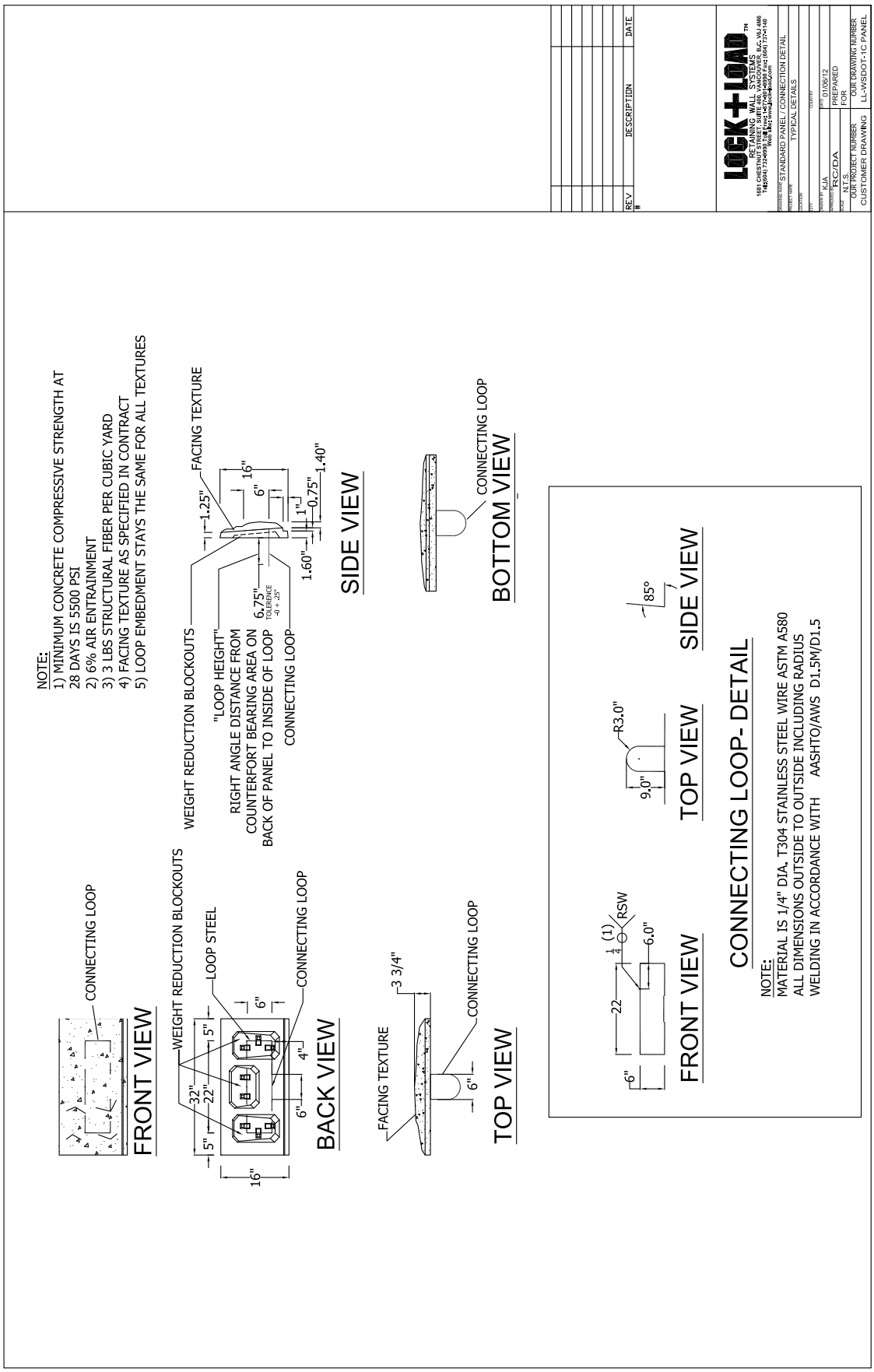
NOTE:
1) MINIMUM CONCRETE COMPRESSIVE STRENGTH AT 28 DAYS IS 5500 PSI
2) 6% AIR ENTRAINMENT
3) 3 LBS STRUCTURAL FIBER PER CUBIC YARD
4) FACING TEXTURE AS SPECIFIED IN CONTRACT
5) LOOP EMBEDMENT STAYS THE SAME FOR ALL TEXTURES
CONNECTING LOOP
FRONT VIEW
WEIGHT REDUCTION BLOCKOUTS
LOOP STEEL
CONNECTING LOOP
BACK VIEW
FACING TEXTURE
CONNECTING LOOP
TOP VIEW
FACING TEXTURE
WEIGHT REDUCTION BLOCKOUTS
"LOOP HEIGHT"
RIGHT ANGLE DISTANCE FROM COUNTERFORT BEARING AREA ON BACK OF PANEL TO INSIDE OF LOOP
CONNECTING LOOP
SIDE VIEW
CONNECTING LOOP
BOTTOM VIEW
CONNECTING LOOP- DETAIL
NOTE:
MATERIAL IS 1/4" DIA. T304 STAINLESS STEEL WIRE ASTM A580
ALL DIMENSIONS OUTSIDE TO OUTSIDE INCLUDING RADIUS
WELDING IN ACCORDANCE WITH AASHTO/AWS D1.5M/D1.5
FRONT VIEW
TOP VIEW
SIDE VIEW
LOCK+LOAD
RETAINING WALL SYSTEMS
STANDARD PANEL / CONNECTION DETAIL
TYPICAL DETAILS
PREPARED FOR
OUR PROJECT NUMBER
CUSTOMER DRAWING
OUR DRAWING NUMBER
LL-WSDOT-1C PANEL
REV #
DESCRIPTION
DATE

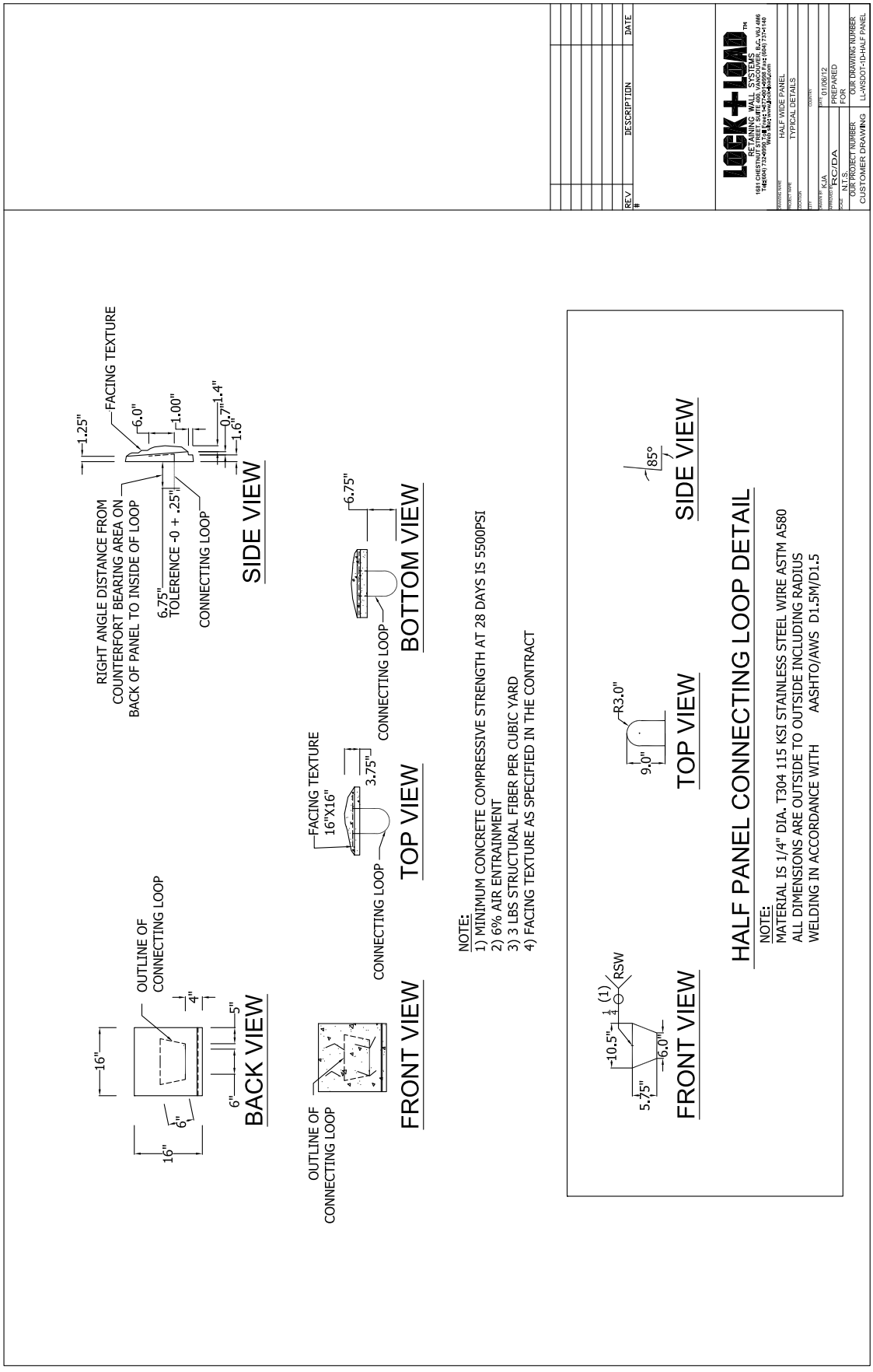
BACK VIEW
16"
16"
6"
6"
5"
4"
OUTLINE OF CONNECTING LOOP
FRONT VIEW
OUTLINE OF CONNECTING LOOP
TOP VIEW
FACING TEXTURE 16"X16"
3.75"
CONNECTING LOOP
BOTTOM VIEW
6.75"
CONNECTING LOOP
SIDE VIEW
RIGHT ANGLE DISTANCE FROM COUNTERFORT BEARING AREA ON BACK OF PANEL TO INSIDE OF LOOP
6.75"
TOLERENCE -0 + .25"
CONNECTING LOOP
1.25"
FACING TEXTURE
6.0"
1.00"
0.7"
1.4"
1.6"
NOTE:
1) MINIMUM CONCRETE COMPRESSIVE STRENGTH AT 28 DAYS IS 5500PSI
2) 6% AIR ENTRAINMENT
3) 3 LBS STRUCTURAL FIBER PER CUBIC YARD
4) FACING TEXTURE AS SPECIFIED IN THE CONTRACT
FRONT VIEW
10.5"
5.75"
6.0"
1/4 (1)
RSW
TOP VIEW
9.0"
R3.0"
SIDE VIEW
85°
HALF PANEL CONNECTING LOOP DETAIL
NOTE:
MATERIAL IS 1/4" DIA. T304 115 KSI STAINLESS STEEL WIRE ASTM A580
ALL DIMENSIONS ARE OUTSIDE TO OUTSIDE INCLUDING RADIUS
WELDING IN ACCORDANCE WITH AASHTO/AWS D1.5M/D1.5
REV #
DESCRIPTION
DATE
LOCK+LOAD
RETAINING WALL SYSTEMS
HALF WIDE PANEL
TYPICAL DETAILS
01/06/12
PREPARED FOR
OUR DRAWING NUMBER
LL-WSDOT-1D-HALF PANEL
OUR PROJECT NUMBER
CUSTOMER DRAWING
N.T.S.
RC/DA
KJA

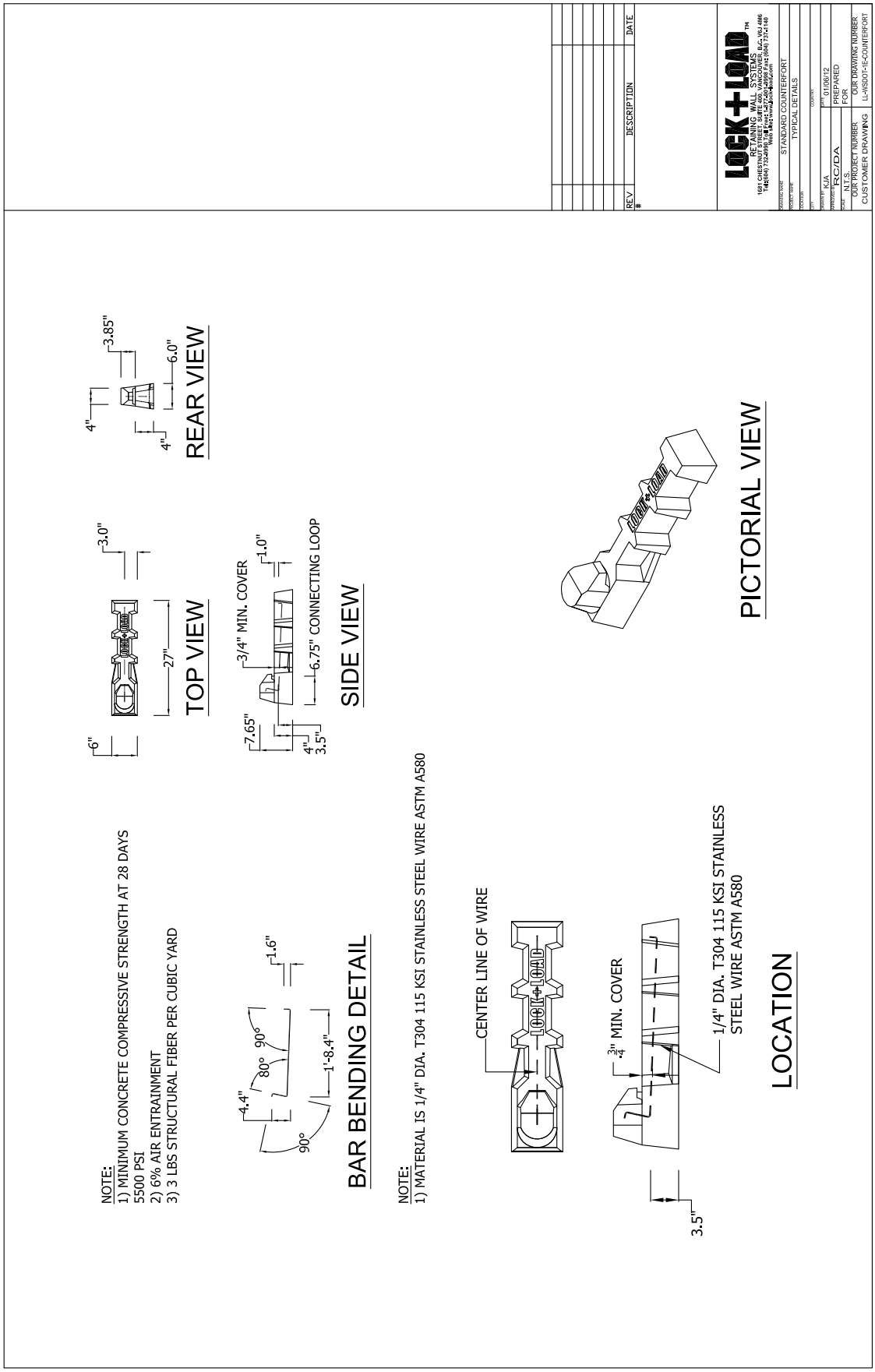
NOTE:
1) MINIMUM CONCRETE COMPRESSIVE STRENGTH AT 28 DAYS 5500 PSI
2) 6% AIR ENTRAINMENT
3) 3 LBS STRUCTURAL FIBER PER CUBIC YARD
6"
3.0"
27"
TOP VIEW
4"
3.85"
4"
6.0"
REAR VIEW
7.65"
3/4" MIN. COVER
1.0"
4"
3.5"
6.75" CONNECTING LOOP
SIDE VIEW
4.4"
80°
90°
1.6"
90°
1'-8.4"
BAR BENDING DETAIL
NOTE:
1) MATERIAL IS 1/4" DIA. T304 115 KSI STAINLESS STEEL WIRE ASTM A580
CENTER LINE OF WIRE
3" MIN. COVER
1/4" DIA. T304 115 KSI STAINLESS STEEL WIRE ASTM A580
3.5"
LOCATION
PICTORIAL VIEW
REV #
DESCRIPTION
DATE
LOCK+LOAD RETAINING WALL SYSTEMS
1681 CHESTNUT STREET, SUITE 400, VANCOUVER, B.C. V6J 4M6
STANDARD COUNTERFORT
TYPICAL DETAILS
KJA
01/06/12
RC/DA
PREPARED FOR
N.T.S.
OUR PROJECT NUMBER
OUR DRAWING NUMBER
CUSTOMER DRAWING
LL-WSD07-IE-COUNTERFORT

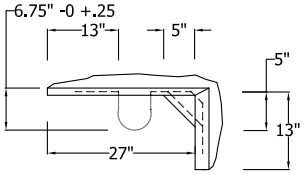

TOP VIEW
LEFT OUSIDE CORNER

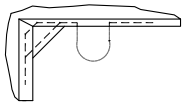

TOP VIEW
RIGHT OUTSIDE CORNER

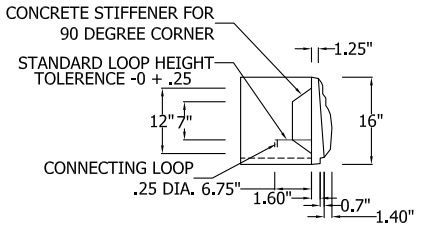

SIDE VIEW

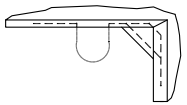

TOP VIEW
LEFT OUTSIDE CORNER

NOTE:
1) MINIMUM CONCRETE COMPRESSIVE STRENGTH 5500psi AT 28 DAYS
2) 6% AIR ENTRAINMENT
3) 3 LBS STRUCTURAL FIBER PER CUBIC YARD
4) FACING TEXTURE AS SPECIFIED IN CONTRACT

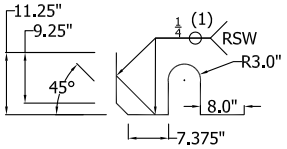

TOP VIEW

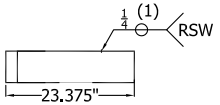

FRONT VIEW



SIDE VIEW

CORNER REINFORCEMENT DETAILS

NOTE:
MATERIAL IS 1/4" DIA. T304 STAINLESS STEEL WIRE 115 KSI ASTM A 580
ALL DIMENSIONS ARE TO OUTSIDE TO OUTSIDE INCLUDING RADIUS
WELDING IN ACCORDANCE WITH AASHTO/AWS D1.5M/D1.5

REV #	DESCRIPTION	DATE

LOCK+LOAD™
RETAINING WALL SYSTEMS
1681 CHESTNUT STREET, SUITE 400, VANCOUVER, B.C. V6J 4M6
Tel:(604) 732-4990 Toll Free: 1-877-901-4998 Fax: (604) 737-1140
Web site: www.lock-load.com

DRAWING NAME	WET CAST CORNER
PROJECT NAME	TYPICAL DETAILS
LOCATION	
CITY	COUNTRY
DESIGN BY: KJA	DATE: 01/06/12
APPROVED BY: RC/DA	PREPARED FOR
SCALE: N.T.S.	
OUR PROJECT NUMBER	OUR DRAWING NUMBER
CUSTOMER DRAWING	LL-WSDOT-1F-CORNER

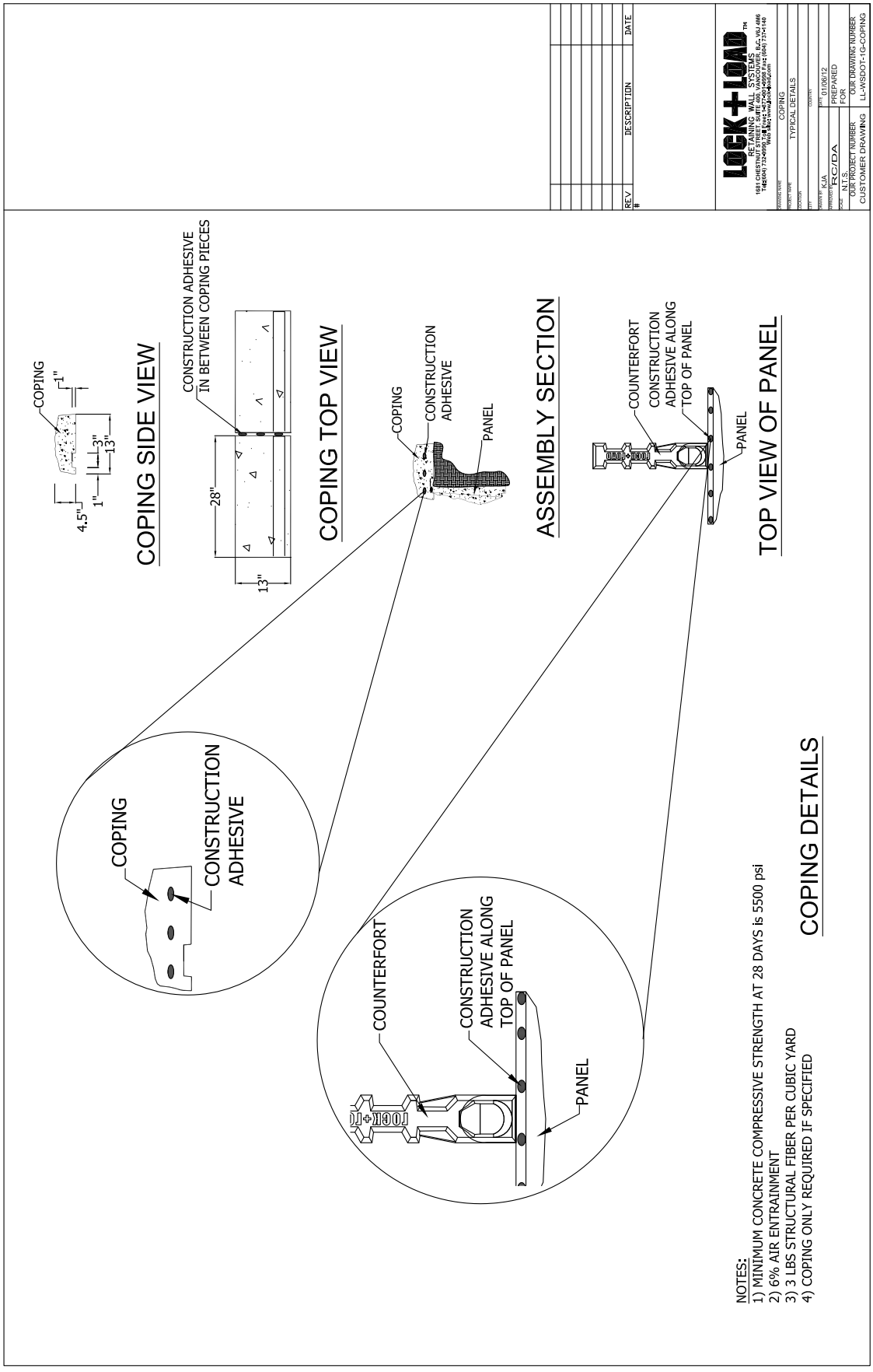
COPING SIDE VIEW
COPING
1"
3"
13"
1"
4.5"
COPING TOP VIEW
CONSTRUCTION ADHESIVE IN BETWEEN COPING PIECES
28"
13"
ASSEMBLY SECTION
COPING
CONSTRUCTION ADHESIVE
PANEL
TOP VIEW OF PANEL
COUNTERFORT
CONSTRUCTION ADHESIVE ALONG TOP OF PANEL
PANEL
COPING
CONSTRUCTION ADHESIVE
COUNTERFORT
CONSTRUCTION ADHESIVE ALONG TOP OF PANEL
PANEL
COPING DETAILS
NOTES:
1) MINIMUM CONCRETE COMPRESSIVE STRENGTH AT 28 DAYS is 5500 psi
2) 6% AIR ENTRAINMENT
3) 3 LBS STRUCTURAL FIBER PER CUBIC YARD
4) COPING ONLY REQUIRED IF SPECIFIED
REV
DESCRIPTION
DATE
LOCK+LOAD
RETAINING WALL SYSTEMS
COPING
TYPICAL DETAILS
KJA
RC/DA
N.T.S.
01/06/12
PREPARED FOR
OUR PROJECT NUMBER
CUSTOMER DRAWING
OUR DRAWING NUMBER
LL-WSDOT-1G-COPING

ALL GEOGRID MUST BE 100% OVER COUNTERFORT
AND EXTEND TO BACK OF PANEL AND VERTICAL FOR 4"
GEOGRID 100% COVERAGE UNLESS SPECIFIED OTHERWISE.

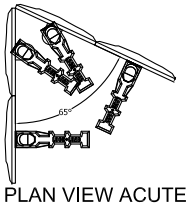

PLAN VIEW ACUTE OUTSIDE
CORNER 71-89 DEGREES

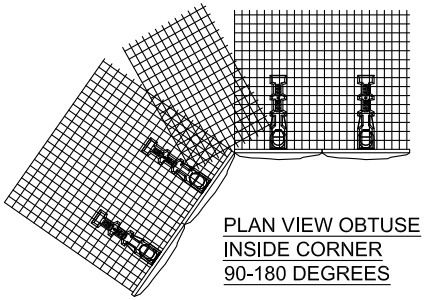

PLAN VIEW OBTUSE
INSIDE CORNER
90-180 DEGREES

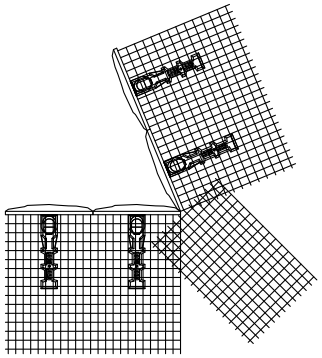

PLAN VIEW ACUTE INSIDE CORNER
90 DEGREES AND LESS (MINIMUM ANGLE 45°)

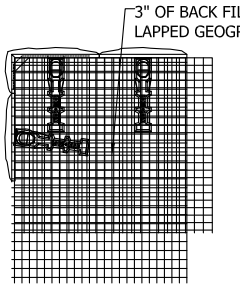

PLAN VIEW ORTHOGONAL
OUTSIDE CORNER 90 DEGREE

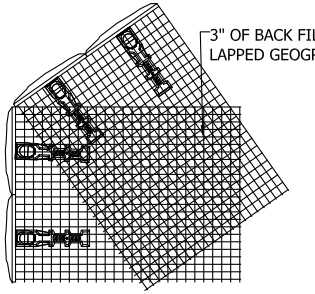

PLAN VIEW OBTUSE OUTSIDE
CORNER 90-180 DEGREES

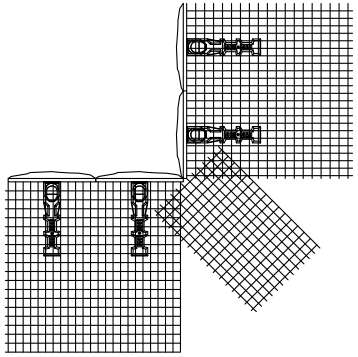

PLAN VIEW ORTHOGONAL
IINSIDE CORNER 90 DEGREE

REV #	DESCRIPTION	DATE

LOCK+LOAD™
RETAINING WALL SYSTEMS
1681 CHESTNUT STREET, SUITE 400, VANCOUVER, B.C. V6J 4M6
Tel:(604) 732-9990 Toll Free: 1-877-491-9998 Fax: (604) 737-1140
Web: www.lock-load.com

DRAWING NAME	GEO GRID INSTALLATION
PROJECT NAME	TYPICAL DETAILS
LOCATION	
CITY	COUNTRY
DRAWN BY: KJA	DATE: 01/06/12
APPROVED BY: RC/DA	PREPARED FOR
SCALE: N.T.S.	
OUR PROJECT NUMBER	OUR DRAWING NUMBER
CUSTOMER DRAWING	LL-WSDOT-3-GRID LAYOUT

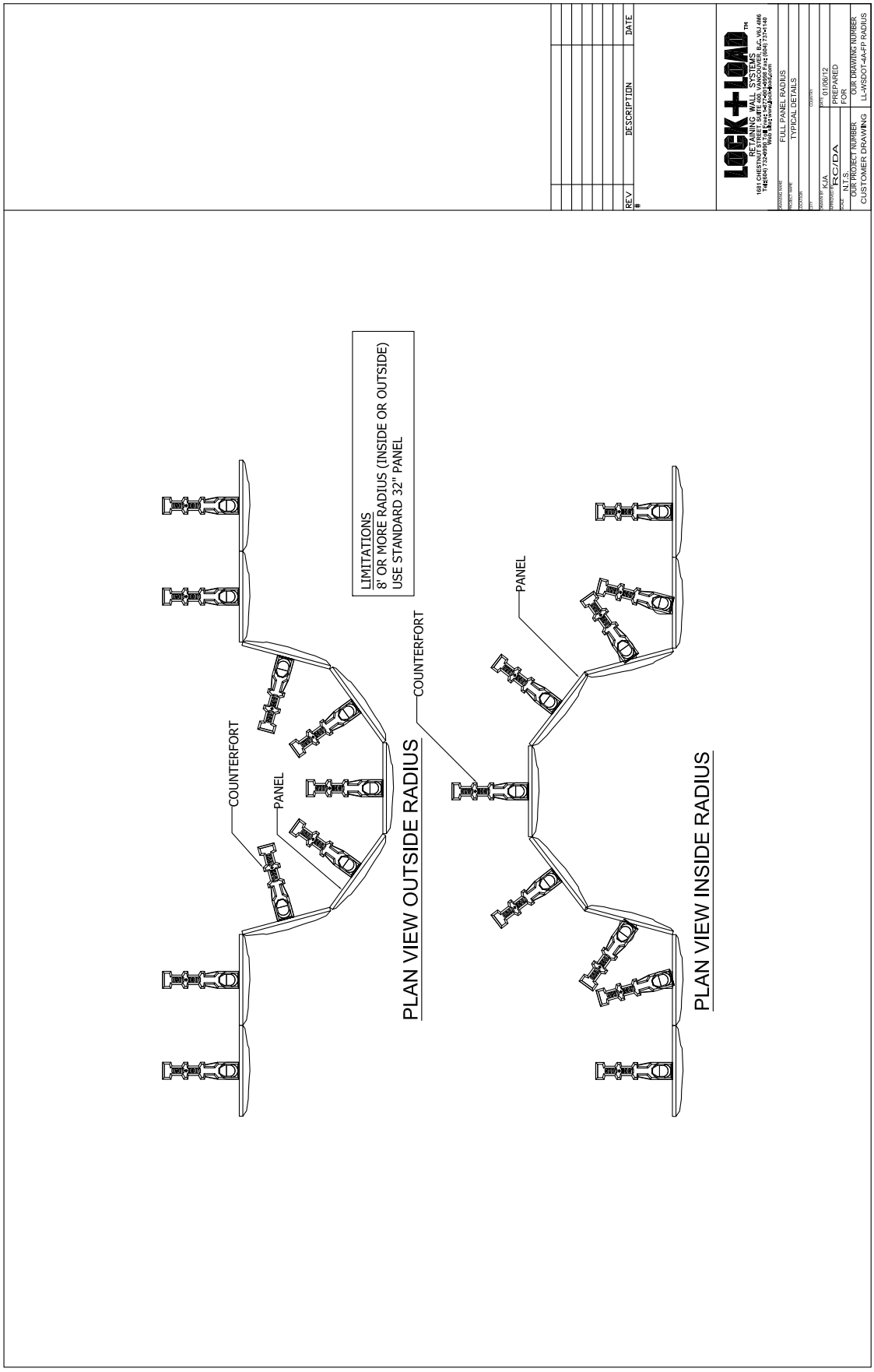
LOCK+LOAD
RETAINING WALL SYSTEMS
REV #
DESCRIPTION
DATE
FULL PANEL RADIUS
TYPICAL DETAILS
K.IA
01/06/12
N.T.S.
PREPARED FOR
OUR PROJECT NUMBER
OUR DRAWING NUMBER
CUSTOMER DRAWING
LL-WSDOT-4A-FP RADIUS
LIMITATIONS
8' OR MORE RADIUS (INSIDE OR OUTSIDE)
USE STANDARD 32" PANEL
COUNTERFORT
PANEL
PLAN VIEW OUTSIDE RADIUS
COUNTERFORT
PANEL
PLAN VIEW INSIDE RADIUS

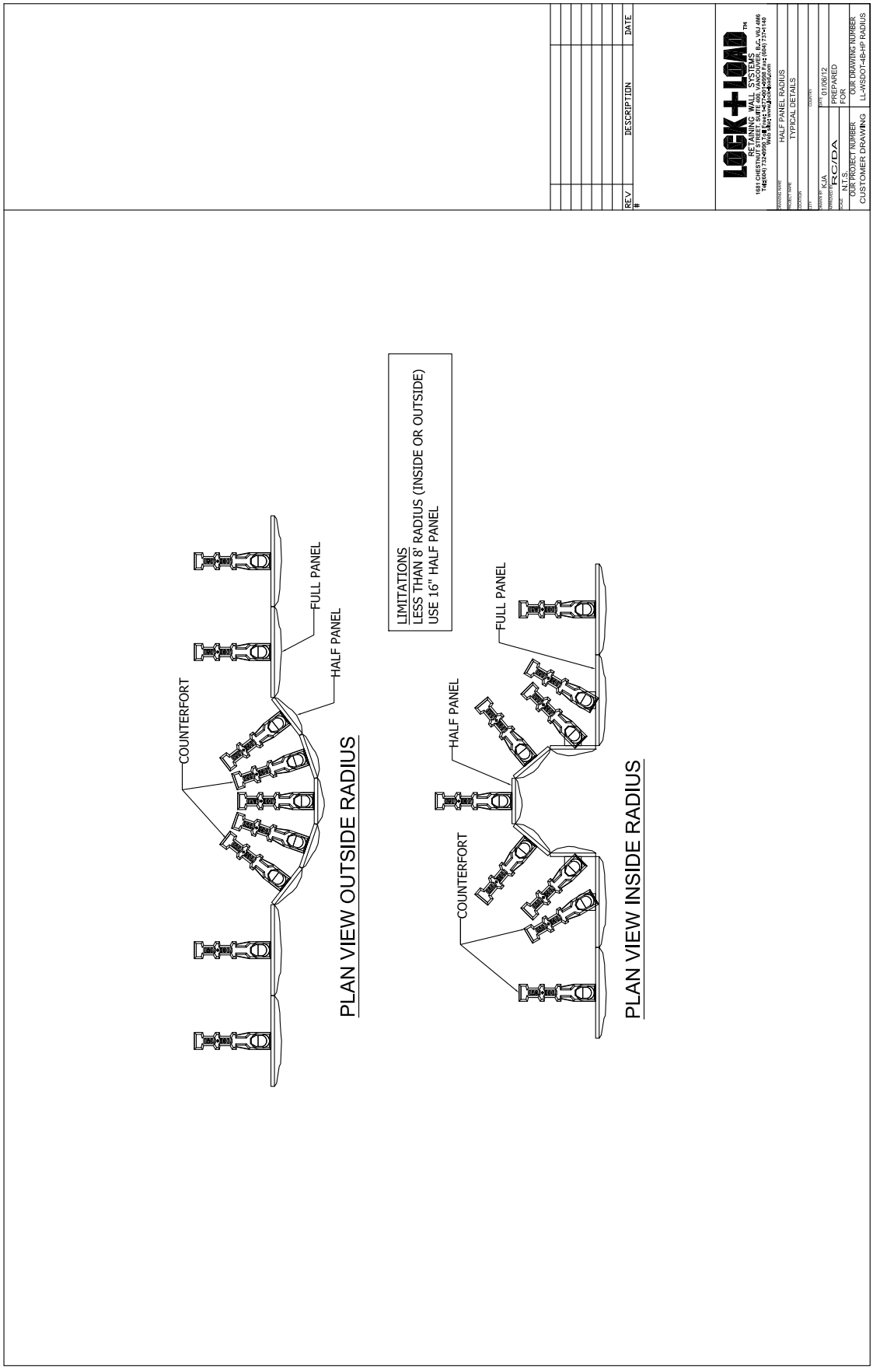
LIMITATIONS
LESS THAN 8' RADIUS (INSIDE OR OUTSIDE)
USE 16" HALF PANEL
COUNTERFORT
FULL PANEL
HALF PANEL
PLAN VIEW OUTSIDE RADIUS
COUNTERFORT
HALF PANEL
FULL PANEL
PLAN VIEW INSIDE RADIUS
REV
DESCRIPTION
DATE
LOCK+LOAD
RETAINING WALL SYSTEMS
HALF PANEL RADIUS
TYPICAL DETAILS
KJA
01/06/12
RC/DA
PREPARED FOR
N.T.S.
OUR PROJECT NUMBER
CUSTOMER DRAWING
OUR DRAWING NUMBER
LL-WSDOT-48-HP RADIUS

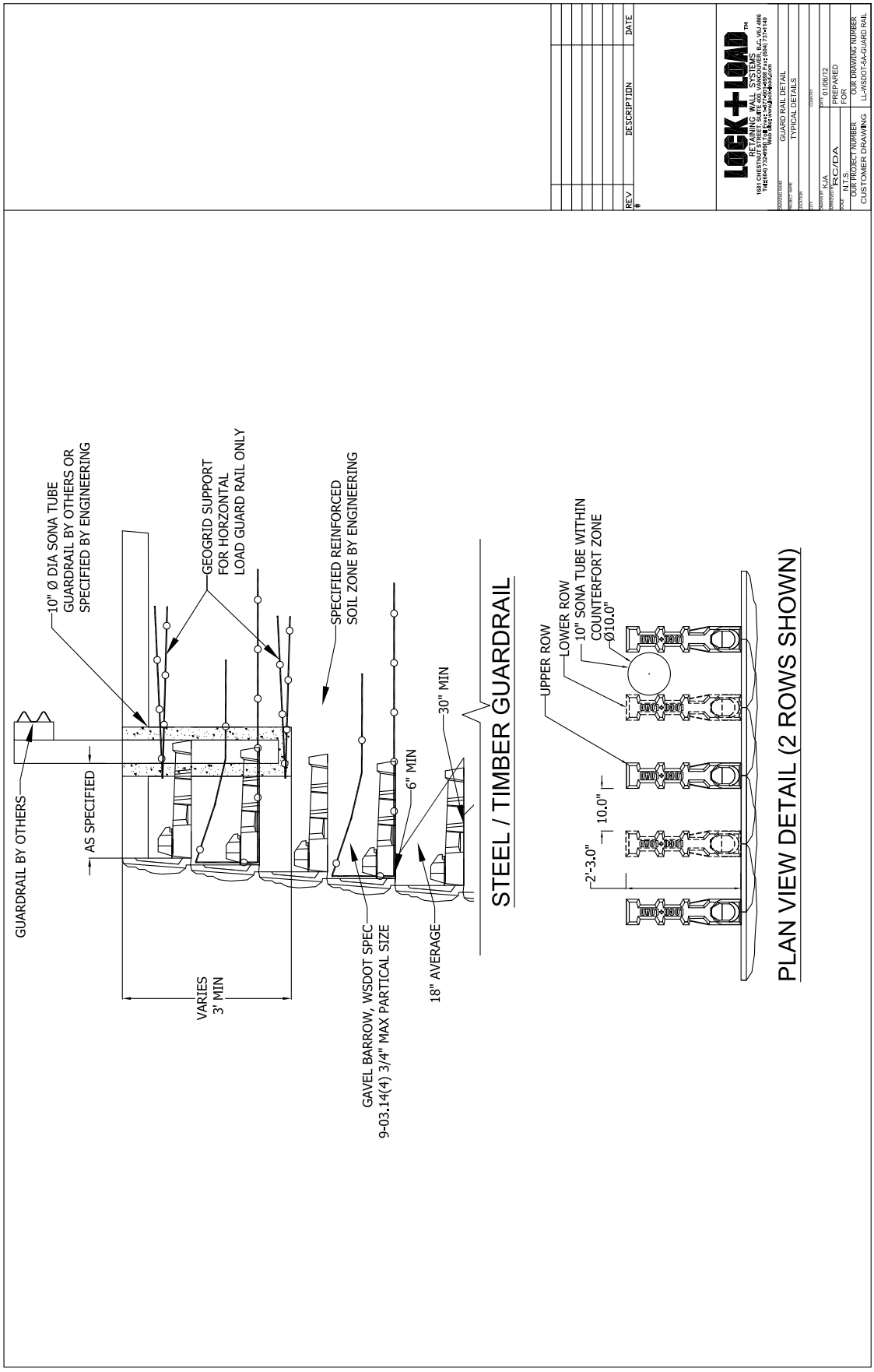
10" Ø DIA SONA TUBE
GUARDRAIL BY OTHERS OR
SPECIFIED BY ENGINEERING
GEOGRID SUPPORT
FOR HORZONTAL
LOAD GUARD RAIL ONLY
SPECIFIED REINFORCED
SOIL ZONE BY ENGINEERING
GUARDRAIL BY OTHERS
AS SPECIFIED
VARIES
3' MIN
GAVEL BARROW, WSDOT SPEC
9-03.14(4) 3/4" MAX PARTICAL SIZE
18" AVERAGE
6" MIN
30" MIN
STEEL / TIMBER GUARDRAIL
UPPER ROW
LOWER ROW
10" SONA TUBE WITHIN
COUNTERFORT ZONE
Ø10.0"
10.0"
2'-3.0"
PLAN VIEW DETAIL (2 ROWS SHOWN)
REV
DESCRIPTION
DATE
LOCK+LOAD
RETAINING WALL SYSTEMS
GUARD RAIL DETAIL
TYPICAL DETAILS
KJA
01/06/12
RC/DA
PREPARED
FOR
N.T.S.
OUR PROJECT NUMBER
CUSTOMER DRAWING
OUR DRAWING NUMBER
LL-WSDOT-5A-GUARD RAIL

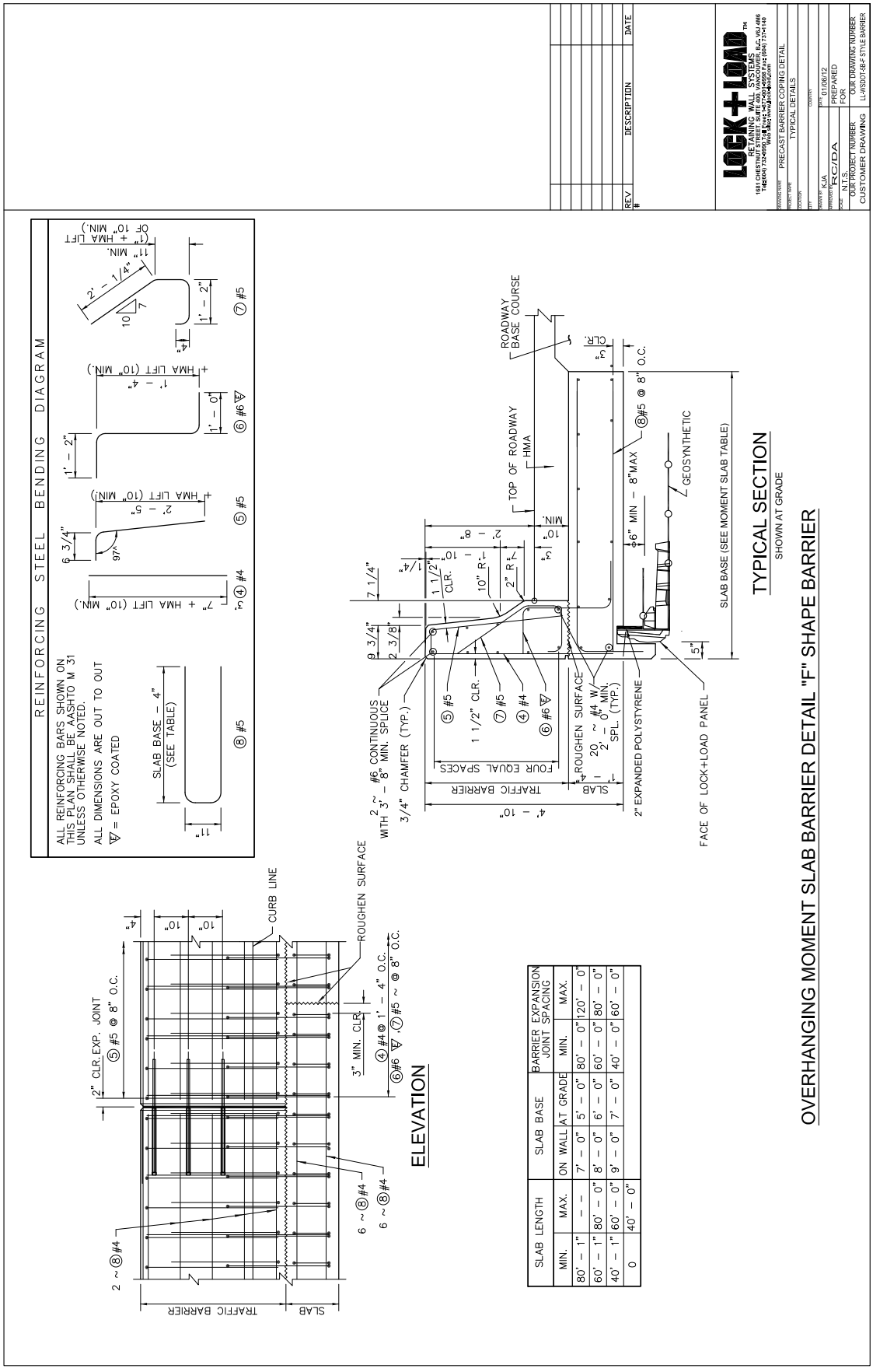

SLAB LENGTH		SLAB BASE		BARRIER EXPANSION JOINT SPACING	
MIN.	MAX.	ON WALL	AT GRADE	MIN.	MAX.
80' – 1"	– –	7' – 0"	5' – 0"	80' – 0"	120' – 0"
60' – 1"	80' – 0"	8' – 0"	6' – 0"	60' – 0"	80' – 0"
40' – 1"	60' – 0"	9' – 0"	7' – 0"	40' – 0"	60' – 0"
0	40' – 0"				

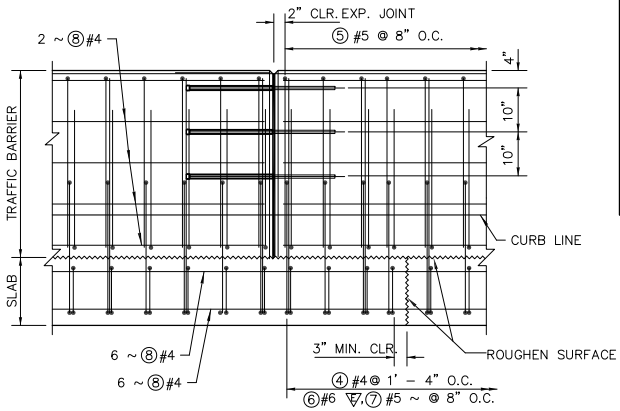

ELEVATION

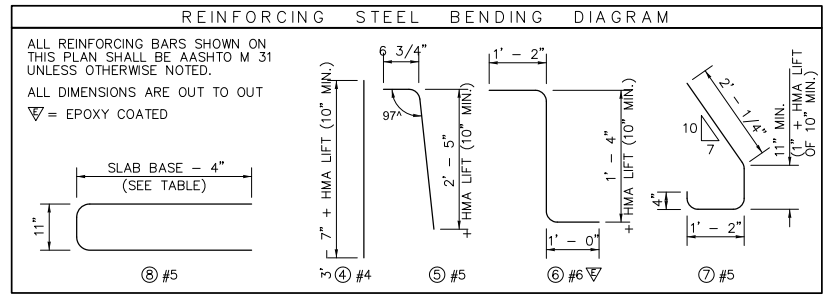

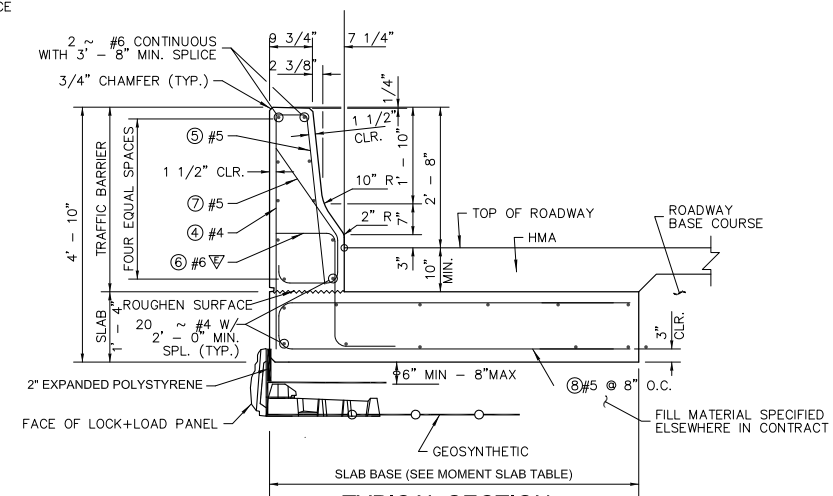

TYPICAL SECTION
SHOWN AT GRADE

SLAB LENGTH		SLAB BASE		BARRIER EXPANSION JOINT SPACING	
MIN.	MAX.	ON WALL	AT GRADE	MIN.	MAX.
80' – 1"	– –	7' – 0"	5' – 0"	80' – 0"	120' – 0"
60' – 1"	80' – 0"	8' – 0"	6' – 0"	60' – 0"	80' – 0"
40' – 1"	60' – 0"	9' – 0"	7' – 0"	40' – 0"	60' – 0"
0	40' – 0"				

MOMENT SLAB BARRIER DETAIL- STANDARD "F" SHAPE BARRIER

REV	DESCRIPTION	DATE
#		

LOCK+LOAD™
RETAINING WALL SYSTEMS
1681 CHESTNUT STREET, SUITE 400, VANCOUVER, B.C. V6J 4M6
Tel:(604) 732-9990 Toll Free: 1-877-901-9998 Fax: (604) 737-1140
Web site: www.lock-load.com

DRAWING NAME	TRAFFIC BARRIER DETAIL
PROJECT NAME	TYPICAL DETAILS
LOCATION	
CITY	COUNTRY
DRAWN BY KJA	DATE 01/06/12
APPROVED BY RC/DA	PREPARED FOR
SCALE N.T.S.	
OUR PROJECT NUMBER CUSTOMER DRAWING	OUR DRAWING NUMBER LL-W/SDOT-5C-F STYLE BARRIER

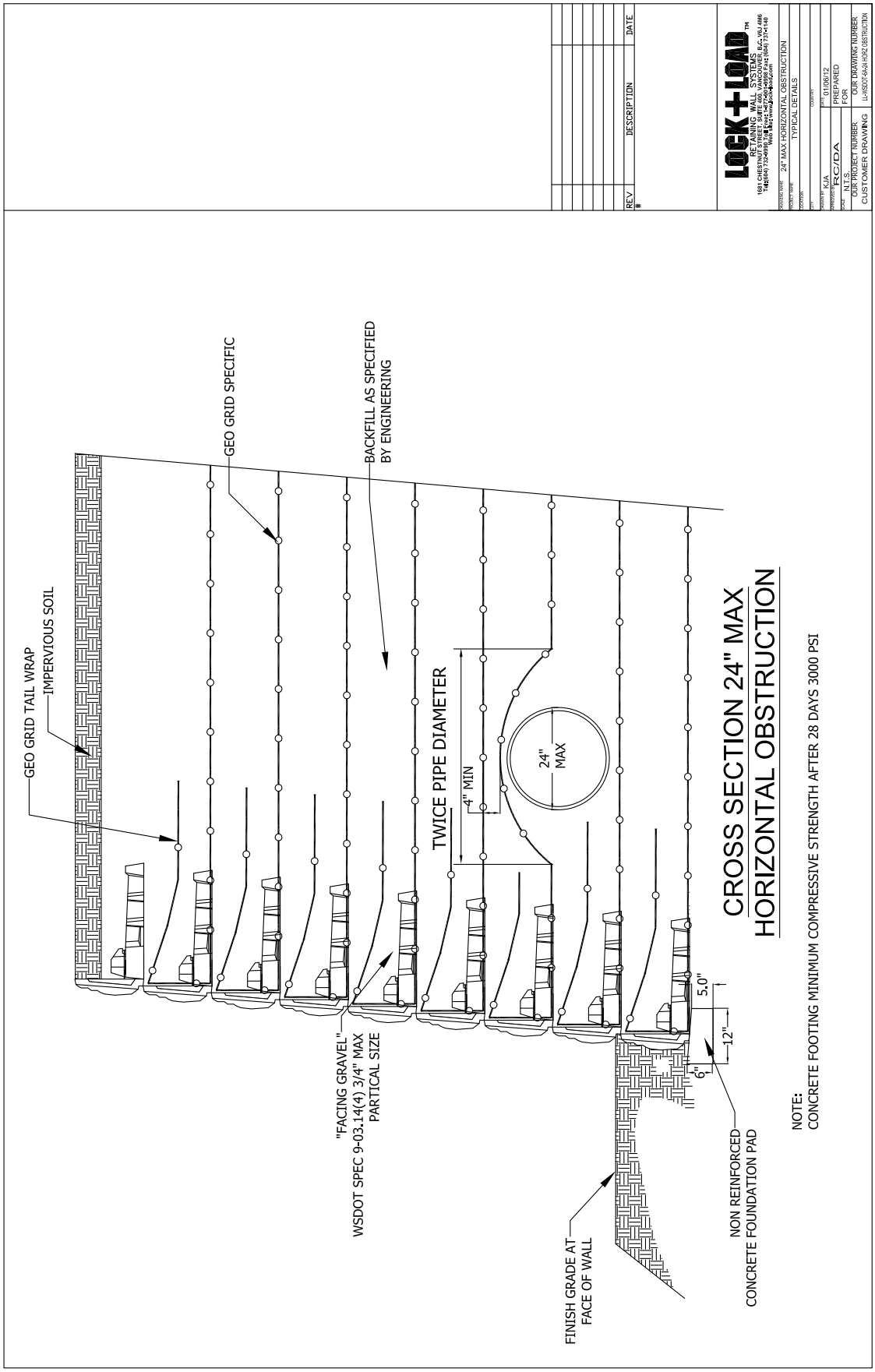
GEO GRID TAIL WRAP
IMPERVIOUS SOIL
GEO GRID SPECIFIC
BACKFILL AS SPECIFIED BY ENGINEERING
TWICE PIPE DIAMETER
4" MIN
24" MAX
"FACING GRAVEL" WSDOT SPEC 9-03.14(4) 3/4" MAX PARTICAL SIZE
FINISH GRADE AT FACE OF WALL
NON REINFORCED CONCRETE FOUNDATION PAD
5.0"
12"
6"
CROSS SECTION 24" MAX
HORIZONTAL OBSTRUCTION
NOTE:
CONCRETE FOOTING MINIMUM COMPRESSIVE STRENGTH AFTER 28 DAYS 3000 PSI
REV
DESCRIPTION
DATE
LOCK+LOAD
RETAINING WALL SYSTEMS
24" MAX HORIZONTAL OBSTRUCTION
TYPICAL DETAILS
KJA
01/06/12
RC/DA
PREPARED FOR
N.T.S.
OUR PROJECT NUMBER
CUSTOMER DRAWING
OUR DRAWING NUMBER
LL-WSDOT-8A-24 HORZ OBSTRUCTION

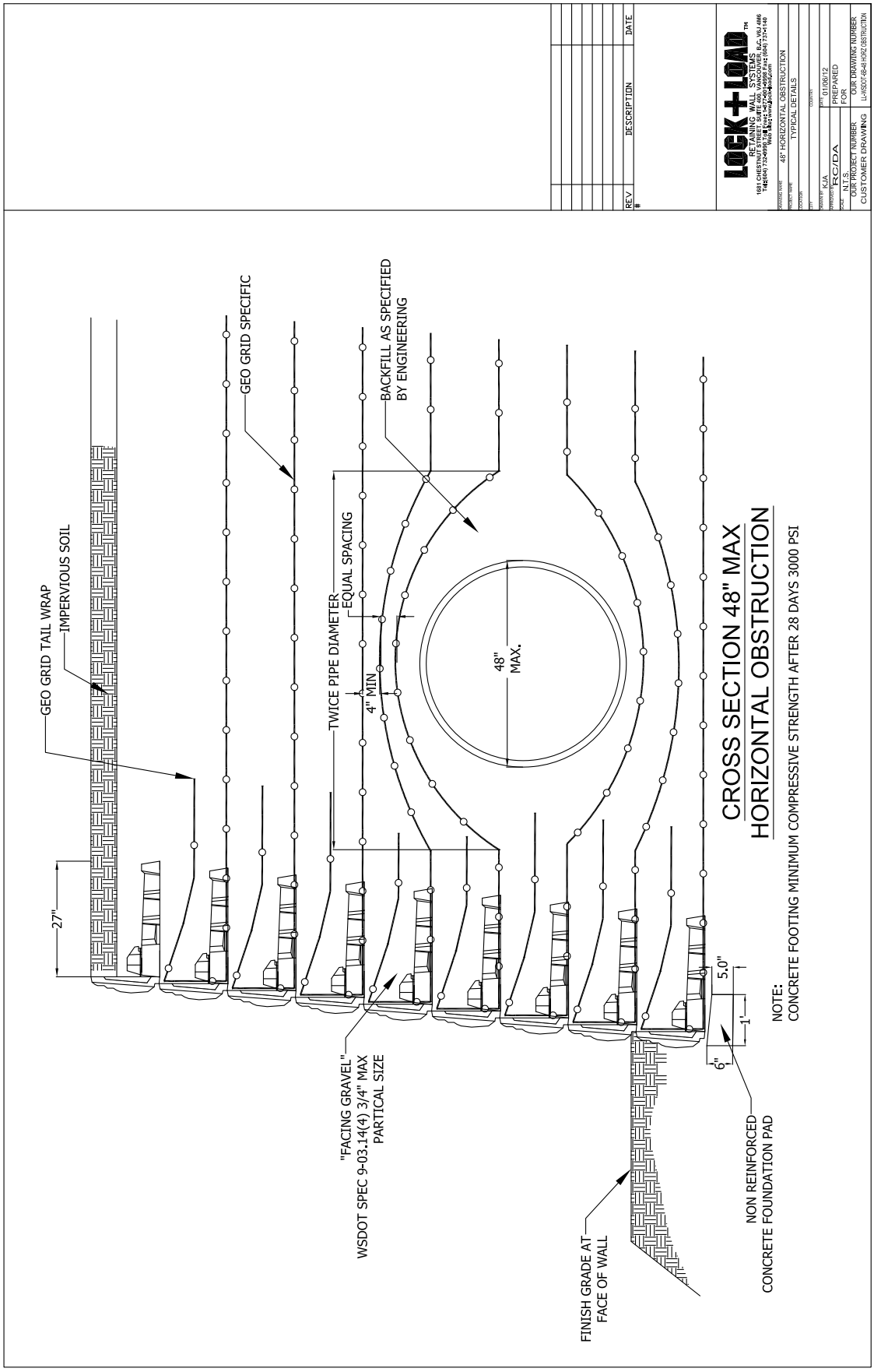
GEO GRID TAIL WRAP
IMPERVIOUS SOIL
27"
GEO GRID SPECIFIC
TWICE PIPE DIAMETER
EQUAL SPACING
4" MIN
BACKFILL AS SPECIFIED BY ENGINEERING
48" MAX.
"FACING GRAVEL" WSDOT SPEC 9-03.14(4) 3/4" MAX PARTICAL SIZE
FINISH GRADE AT FACE OF WALL
NON REINFORCED CONCRETE FOUNDATION PAD
5.0"
1'
6"
CROSS SECTION 48" MAX
HORIZONTAL OBSTRUCTION
NOTE:
CONCRETE FOOTING MINIMUM COMPRESSIVE STRENGTH AFTER 28 DAYS 3000 PSI
REV
DESCRIPTION
DATE
LOCK+LOAD
RETAINING WALL SYSTEMS
48" HORIZONTAL OBSTRUCTION
TYPICAL DETAILS
KJA
RC/DA
N.T.S.
01/06/12
PREPARED FOR
OUR PROJECT NUMBER
CUSTOMER DRAWING
OUR DRAWING NUMBER
LL-WSDOT-08-48 HORZ OBSTRUCTION

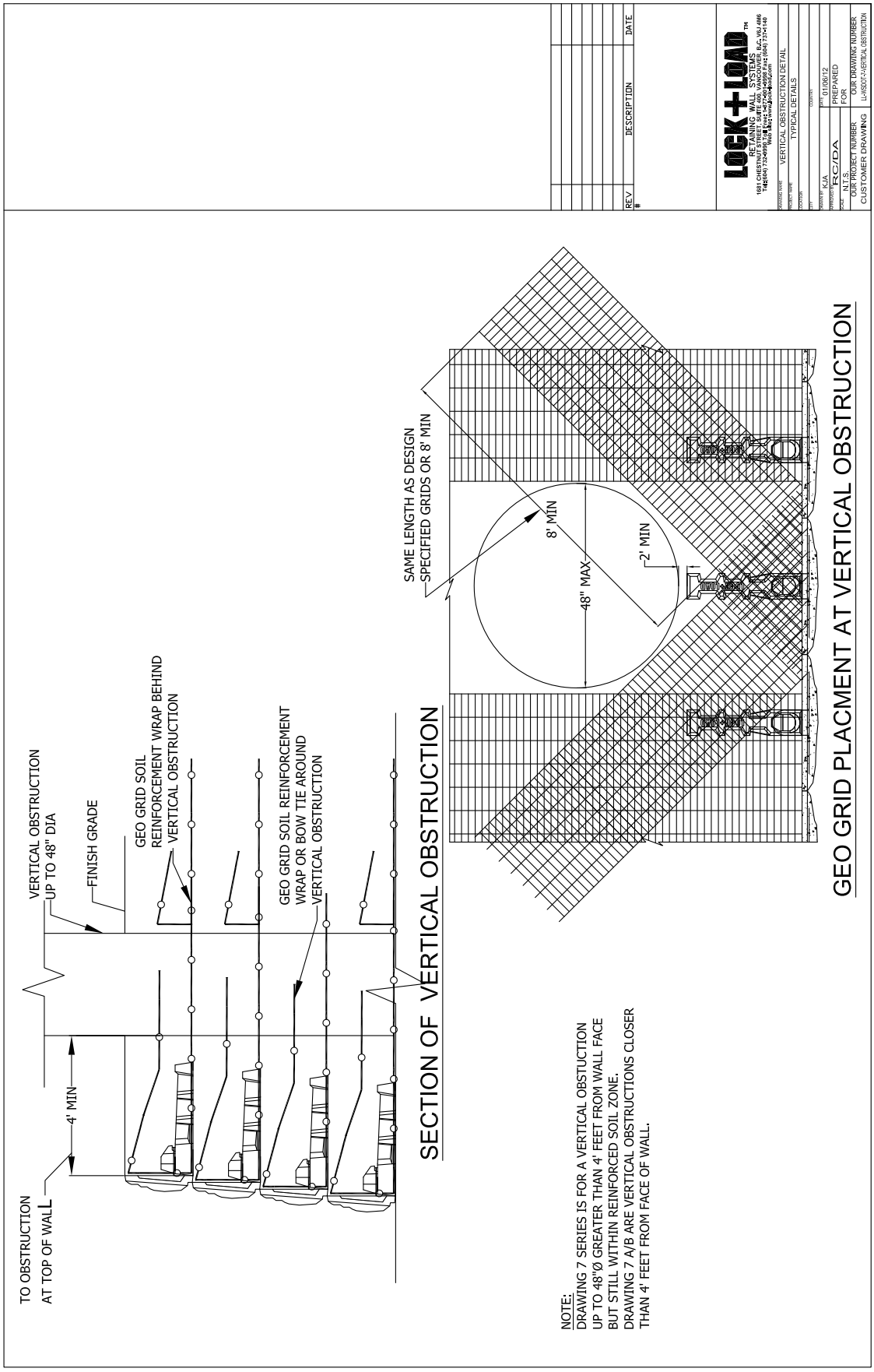
TO OBSTRUCTION
AT TOP OF WALL
4' MIN
VERTICAL OBSTRUCTION
UP TO 48" DIA
FINISH GRADE
GEO GRID SOIL
REINFORCEMENT WRAP BEHIND
VERTICAL OBSTRUCTION
GEO GRID SOIL REINFORCEMENT
WRAP OR BOW TIE AROUND
VERTICAL OBSTRUCTION
SECTION OF VERTICAL OBSTRUCTION
SAME LENGTH AS DESIGN
SPECIFIED GRIDS OR 8' MIN
8' MIN
48" MAX
2' MIN
GEO GRID PLACMENT AT VERTICAL OBSTRUCTION
NOTE:
DRAWING 7 SERIES IS FOR A VERTICAL OBSTUCTION
UP TO 48"Ø GREATER THAN 4' FEET FROM WALL FACE
BUT STILL WITHIN REINFORCED SOIL ZONE.
DRAWING 7 A/B ARE VERTICAL OBSTRUCTIONS CLOSER
THAN 4' FEET FROM FACE OF WALL.
REV
DESCRIPTION
DATE
LOCK+LOAD
RETAINING WALL SYSTEMS
VERTICAL OBSTRUCTION DETAIL
TYPICAL DETAILS
KJA
01/06/12
RC/DA
PREPARED
FOR
N.T.S.
OUR PROJECT NUMBER
CUSTOMER DRAWING
OUR DRAWING NUMBER
LL-MSDOT-7-VERTICAL OBSTRUCTION

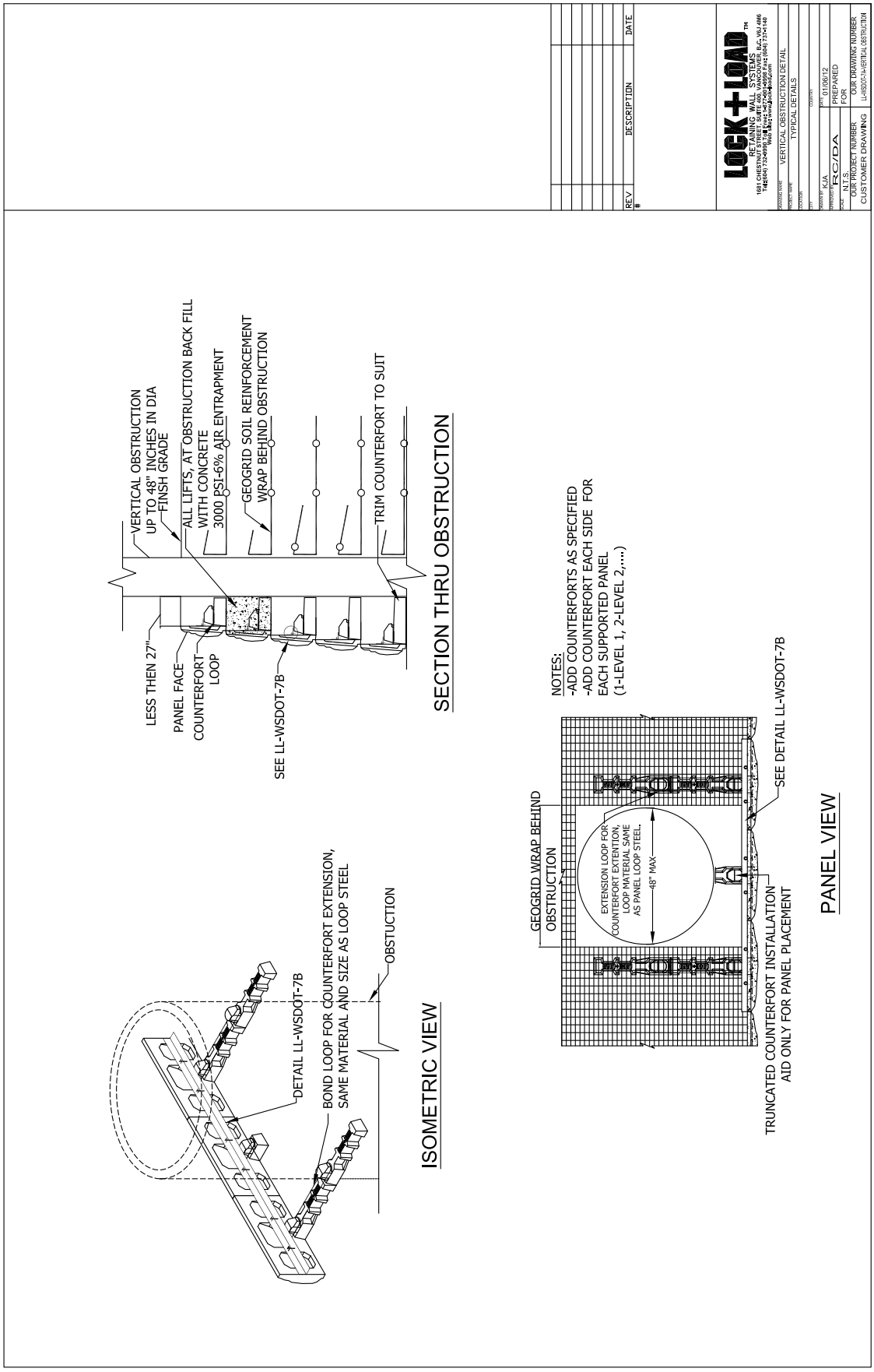
VERTICAL OBSTRUCTION
UP TO 48" INCHES IN DIA
FINSH GRADE
ALL LIFTS, AT OBSTRUCTION BACK FILL
WITH CONCRETE
3000 PSI-6% AIR ENTRAPMENT
GEOGRID SOIL REINFORCEMENT
WRAP BEHIND OBSTRUCTION
TRIM COUNTERFORT TO SUIT
LESS THEN 27"
PANEL FACE
COUNTERFORT
LOOP
SEE LL-WSDOT-7B
SECTION THRU OBSTRUCTION
NOTES:
-ADD COUNTERFORTS AS SPECIFIED
-ADD COUNTERFORT EACH SIDE FOR
EACH SUPPORTED PANEL
(1-LEVEL 1, 2-LEVEL 2,....)
GEOGRID WRAP BEHIND
OBSTRUCTION
EXTENSION LOOP FOR
COUNTERFORT EXTENTION,
LOOP MATERIAL SAME
AS PANEL LOOP STEEL.
48" MAX
SEE DETAIL LL-WSDOT-7B
TRUNCATED COUNTERFORT INSTALLATION
AID ONLY FOR PANEL PLACEMENT
PANEL VIEW
DETAIL LL-WSDOT-7B
BOND LOOP FOR COUNTERFORT EXTENSION,
SAME MATERIAL AND SIZE AS LOOP STEEL
OBSTUCTION
ISOMETRIC VIEW
REV
DESCRIPTION
DATE
LOCK+LOAD
RETAINING WALL SYSTEMS
VERTICAL OBSTRUCTION DETAIL
TYPICAL DETAILS
KJA
01/06/12
RC/DA
PREPARED
FOR
N.T.S.
OUR PROJECT NUMBER
CUSTOMER DRAWING
OUR DRAWING NUMBER
LL-WSDOT-7A-VERTICAL OBSTRUCTION

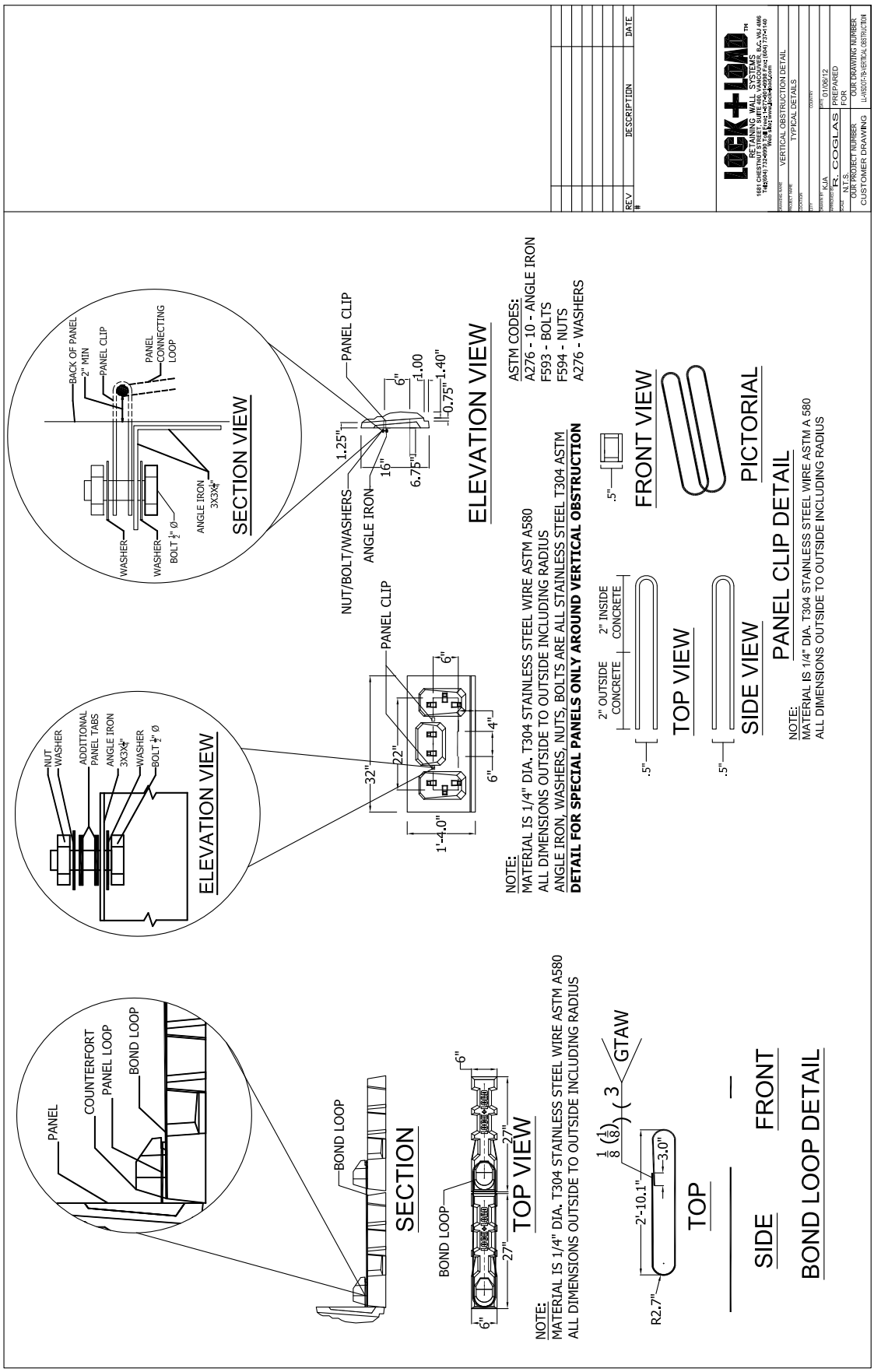
PANEL
COUNTERFORT
PANEL LOOP
BOND LOOP
BOND LOOP
SECTION
BOND LOOP
TOP VIEW
NOTE:
MATERIAL IS 1/4" DIA. T304 STAINLESS STEEL WIRE ASTM A580
ALL DIMENSIONS OUTSIDE TO OUTSIDE INCLUDING RADIUS
2'-10.1"
R2.7"
3.0"
TOP
SIDE
FRONT
BOND LOOP DETAIL
NUT
WASHER
ADDITIONAL PANEL TABS
ANGLE IRON 3X3X¼"
WASHER
BOLT ½" Ø
ELEVATION VIEW
BACK OF PANEL
2" MIN
PANEL CLIP
PANEL CONNECTING LOOP
WASHER
WASHER
BOLT ½" Ø
ANGLE IRON 3X3X¼"
SECTION VIEW
PANEL CLIP
NUT/BOLT/WASHERS
ANGLE IRON
1.25"
16"
6.75"
6"
1.00
0.75"
1.40"
ELEVATION VIEW
PANEL CLIP
32"
22"
6"
4"
6"
1'-4.0"
NOTE:
MATERIAL IS 1/4" DIA. T304 STAINLESS STEEL WIRE ASTM A580
ALL DIMENSIONS OUTSIDE TO OUTSIDE INCLUDING RADIUS
ANGLE IRON, WASHERS, NUTS, BOLTS ARE ALL STAINLESS STEEL T304 ASTM
DETAIL FOR SPECIAL PANELS ONLY AROUND VERTICAL OBSTRUCTION
ASTM CODES:
A276 - 10 - ANGLE IRON
F593 - BOLTS
F594 - NUTS
A276 - WASHERS
2" OUTSIDE CONCRETE
2" INSIDE CONCRETE
.5"
.5"
TOP VIEW
SIDE VIEW
.5"
FRONT VIEW
PICTORIAL
PANEL CLIP DETAIL
NOTE:
MATERIAL IS 1/4" DIA. T304 STAINLESS STEEL WIRE ASTM A 580
ALL DIMENSIONS OUTSIDE TO OUTSIDE INCLUDING RADIUS
LOCK+LOAD
RETAINING WALL SYSTEMS
1681 CHESTNUT STREET, BURLINGTON, ON, CANADA L7P 2S6
Tel: (905) 639-0943 Fax: (905) 639-0938 Toll Free: 1-877-562-5623
VERTICAL OBSTRUCTION DETAIL
TYPICAL DETAILS
K.I.A.
R. COGLAS
N.T.S.
01/06/12
PREPARED FOR
OUR PROJECT NUMBER
CUSTOMER DRAWING
OUR DRAWING NUMBER
LL-MS007-15-VERTICAL OBSTRUCTION
REV #
DESCRIPTION
DATE

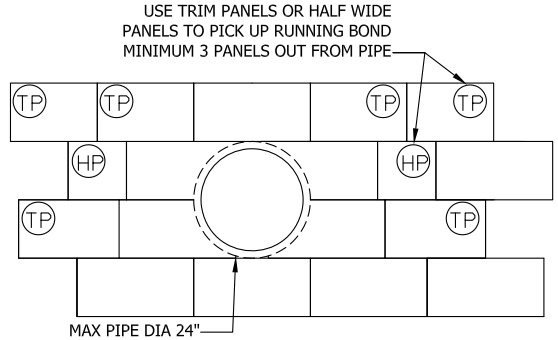

ELEVATION DETAIL FOR PIPE DIAMETERS 24" OR LESS

TP = TRIM PANEL HP = HALF FANEL

NOTE
1) TRIM PANELS TO FIT OUTSIDE DIAMETER OF PIPE
2) NO GEOSYNTHETIC SOIL REINFORCEMENT TO BE EXSPOSED AROUND PIPE

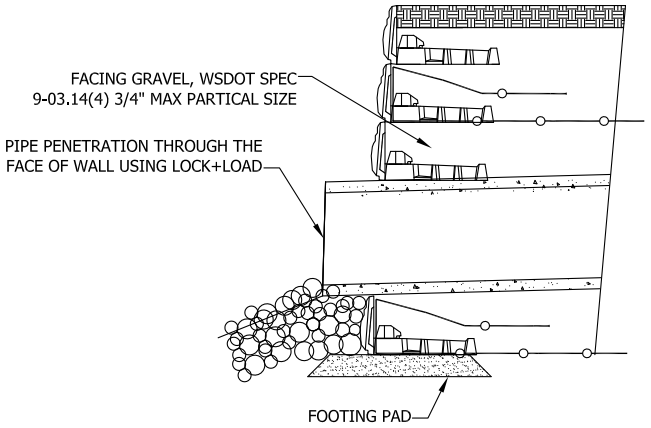

24" PIPE PENATRATION CROSS SECTION AT WALL FACE

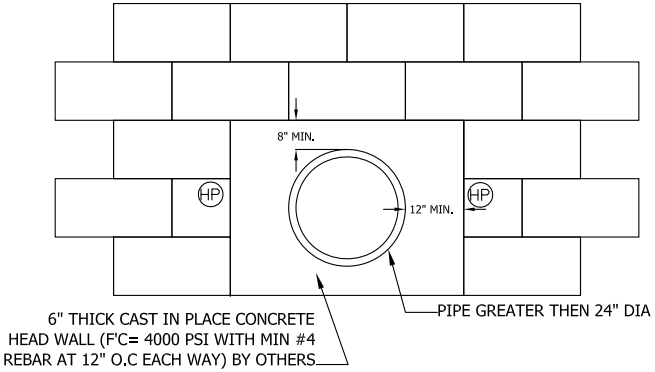

ELEVATION DETAIL FOR PIPE DIAMETERS GREATER THAN 24"

NOTE:
SPECIAL HEADWALL DESIGN IS REQUIRED FOR
PIPE DIAMETERS GREATER THAN 5' FEET

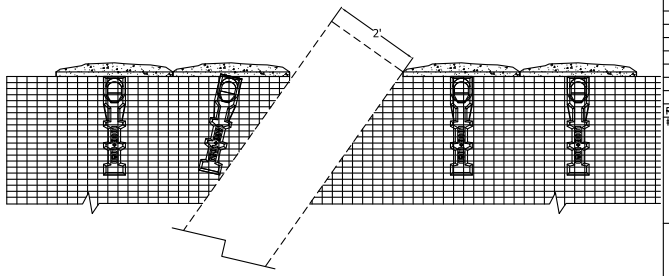

DETAIL FOR PIPE DIAMETERS 24" AT UP TO 45°

NOTE
1) TRIM PANELS TO FIT OUTSIDE DIAMETER OF PIPE
2) NO GEOSYNTHETIC SOIL REINFORCEMENT TO BE EXPOSED AROUND PIPE

REV #	DESCRIPTION	DATE

LOCK+LOAD™
RETAINING WALL SYSTEMS
1681 CHESTNUT STREET, SUITE 400, VANCOUVER, B.C. V6J 4M6
Tel:(604) 732-9999 Toll Free: 1-877-901-9998 Fax: (604) 737-1140
Web: http://www.lock-load.com

DRAWING NAME	24" HORIZONTAL PIPE
PROJECT NAME	TYPICAL DETAILS
LOCATION	
CITY	COUNTRY
DRAWN BY KJA	DATE 01/06/12
APPROVED BY RC/DA	PREPARED FOR
SCALE N.T.S.	
OUR PROJECT NUMBER	OUR DRAWING NUMBER
CUSTOMER DRAWING	LL-WSDOT-8-24 PIPE OUTLET

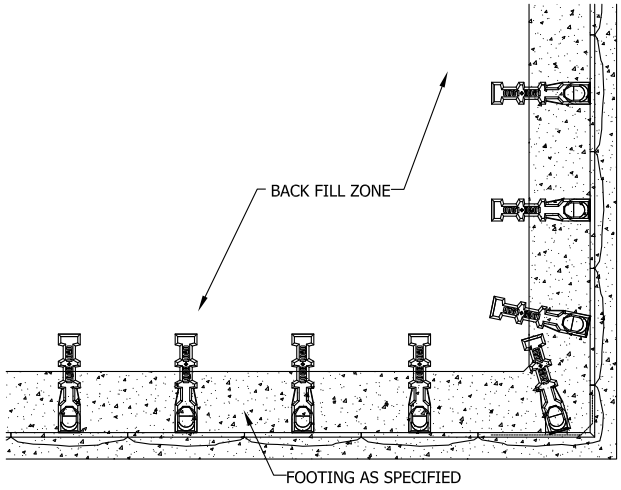

PLAN VIEW FOUNDATION PAD CORNER

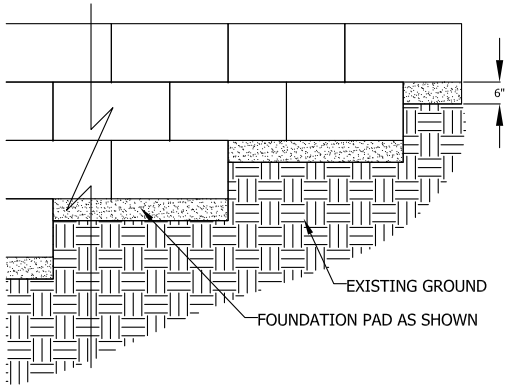

ELEVATION VIEW FOUNDATION STEPS

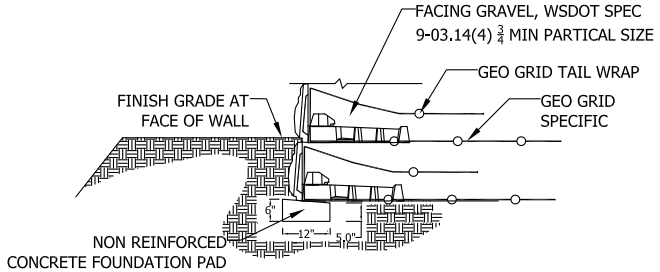

CROSS SECTION FOUNDATION PAD

NOTE:
CONCRETE FOOTING MINIMUM COMPRESSIVE STRENGTH
AFTER 28 DAYS 3000 PSI

REV #	DESCRIPTION	DATE

LOCK+LOAD™
RETAINING WALL SYSTEMS
1681 CHESTNUT STREET, SUITE 400, VANCOUVER, B.C. V6J 4M6
Tel:(604) 732-9990 Toll Free: 1-877-901-9998 Fax: (604) 737-1140
Web: www.lock-load.com

DRAWING NAME	FOUNDATION PAD
PROJECT NAME	TYPICAL DETAILS
LOCATION	
CITY / COUNTRY	
DRAWN BY: KJA	DATE: 01/06/12
APPROVED BY: RC/DA	PREPARED FOR
SCALE: N.T.S.	
OUR PROJECT NUMBER: CUSTOMER DRAWING	OUR DRAWING NUMBER: LL-WSDOT-9-FOUNDATION PAD

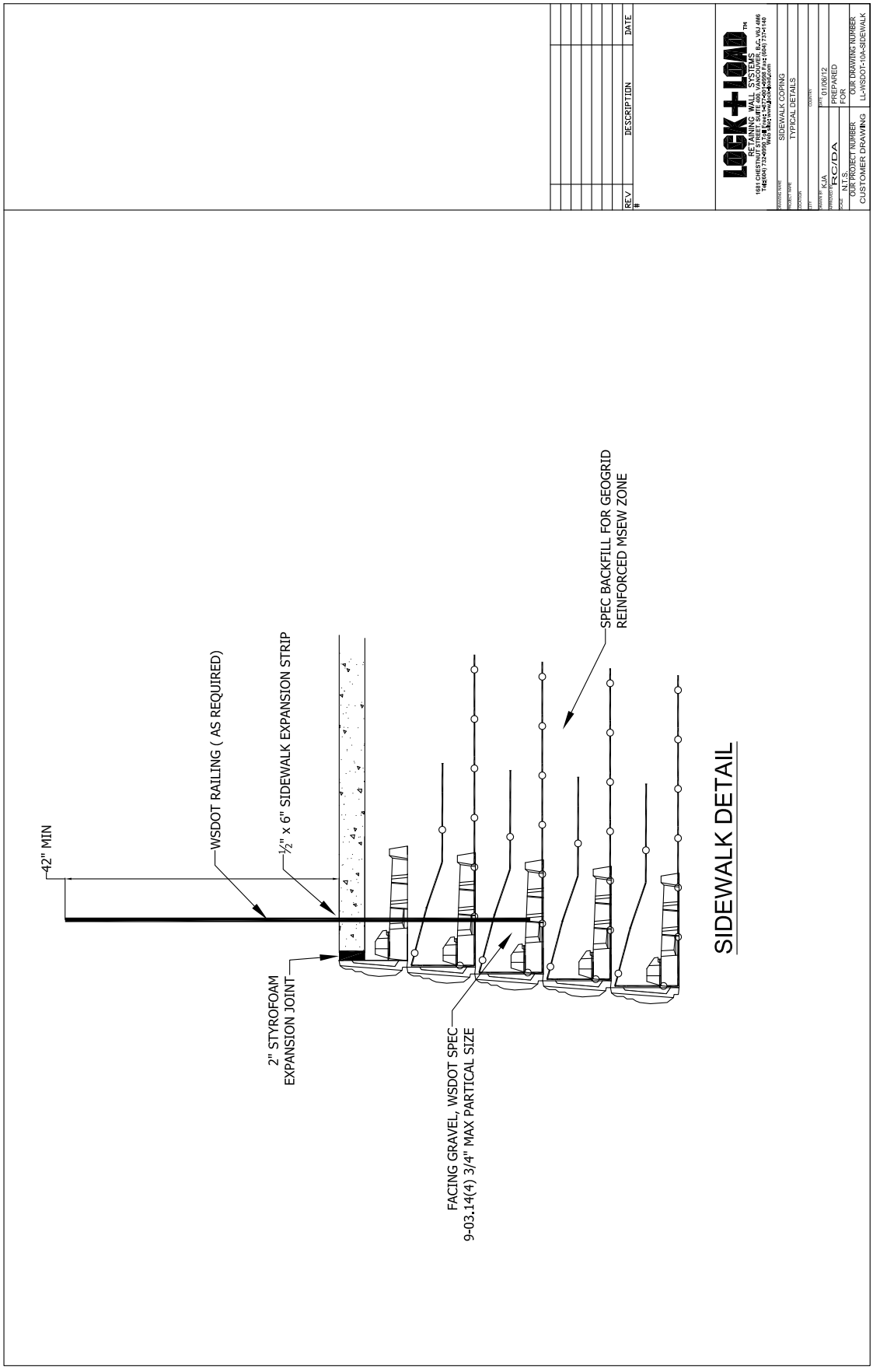
42" MIN
WSDOT RAILING (AS REQUIRED)
½" x 6" SIDEWALK EXPANSION STRIP
SPEC BACKFILL FOR GEOGRID
REINFORCED MSEW ZONE
2" STYROFOAM
EXPANSION JOINT
FACING GRAVEL, WSDOT SPEC
9-03.14(4) 3/4" MAX PARTICAL SIZE
SIDEWALK DETAIL
REV
DESCRIPTION
DATE
LOCK+LOAD
RETAINING WALL SYSTEMS
SIDEWALK COPING
TYPICAL DETAILS
KJA
01/06/12
RC/DA
N.T.S.
PREPARED
FOR
OUR PROJECT NUMBER
CUSTOMER DRAWING
OUR DRAWING NUMBER
LL-WSDOT-10A-SIDEWALK

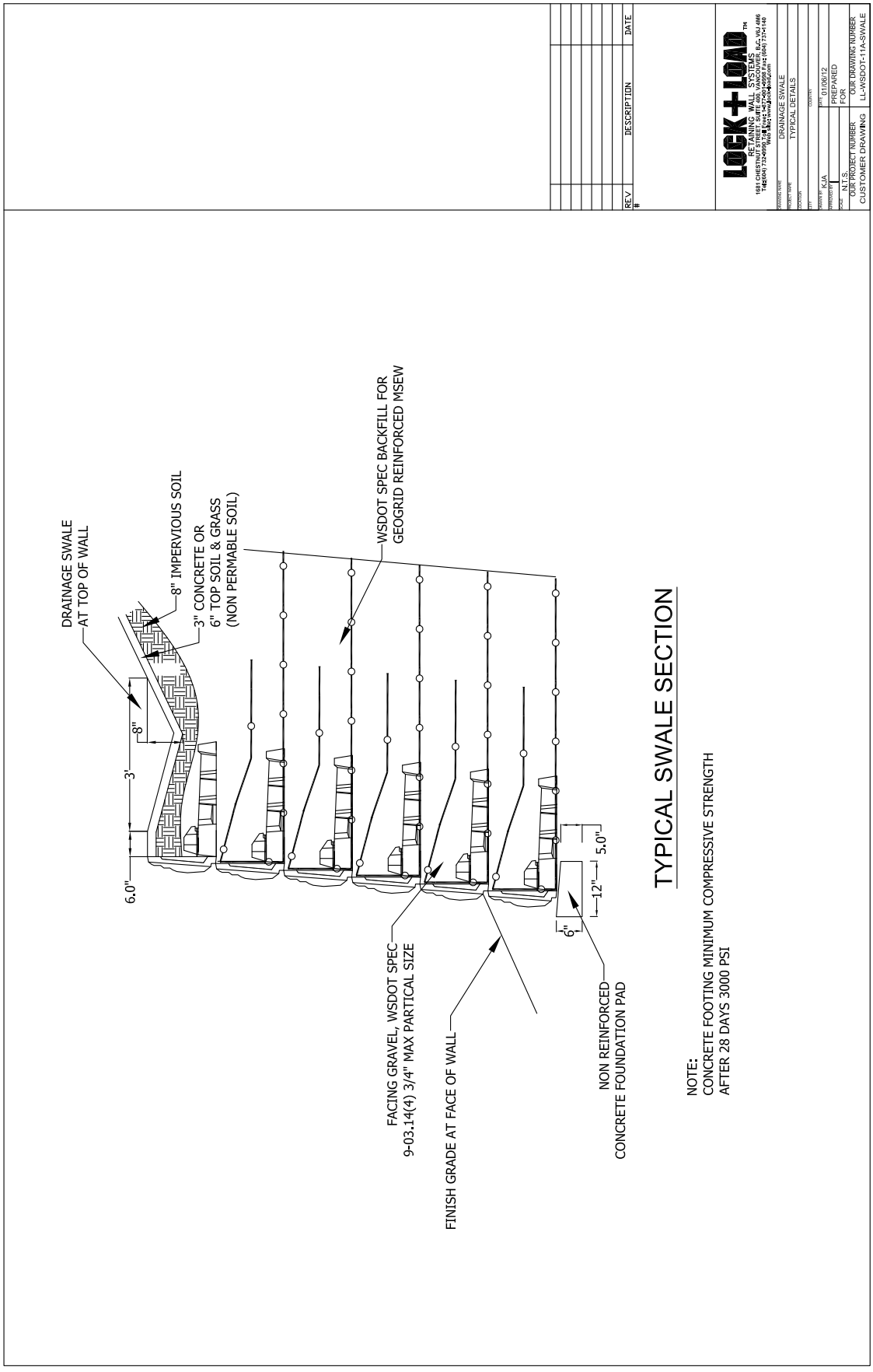
DRAINAGE SWALE
AT TOP OF WALL
8" IMPERVIOUS SOIL
3" CONCRETE OR
6" TOP SOIL & GRASS
(NON PERMIABLE SOIL)
WSDOT SPEC BACKFILL FOR
GEOGRID REINFORCED MSEW
3'
8"
6.0"
5.0"
12"
6"
FACING GRAVEL, WSDOT SPEC
9-03.14(4) 3/4" MAX PARTICAL SIZE
FINISH GRADE AT FACE OF WALL
NON REINFORCED
CONCRETE FOUNDATION PAD
TYPICAL SWALE SECTION
NOTE:
CONCRETE FOOTING MINIMUM COMPRESSIVE STRENGTH
AFTER 28 DAYS 3000 PSI
LOCK+LOAD
RETAINING WALL SYSTEMS
DRAINAGE SWALE
TYPICAL DETAILS
01/06/12
PREPARED
FOR
N.T.S.
OUR PROJECT NUMBER
CUSTOMER DRAWING
OUR DRAWING NUMBER
LL-WSDOT-11A-SWALE
REV #
DESCRIPTION
DATE

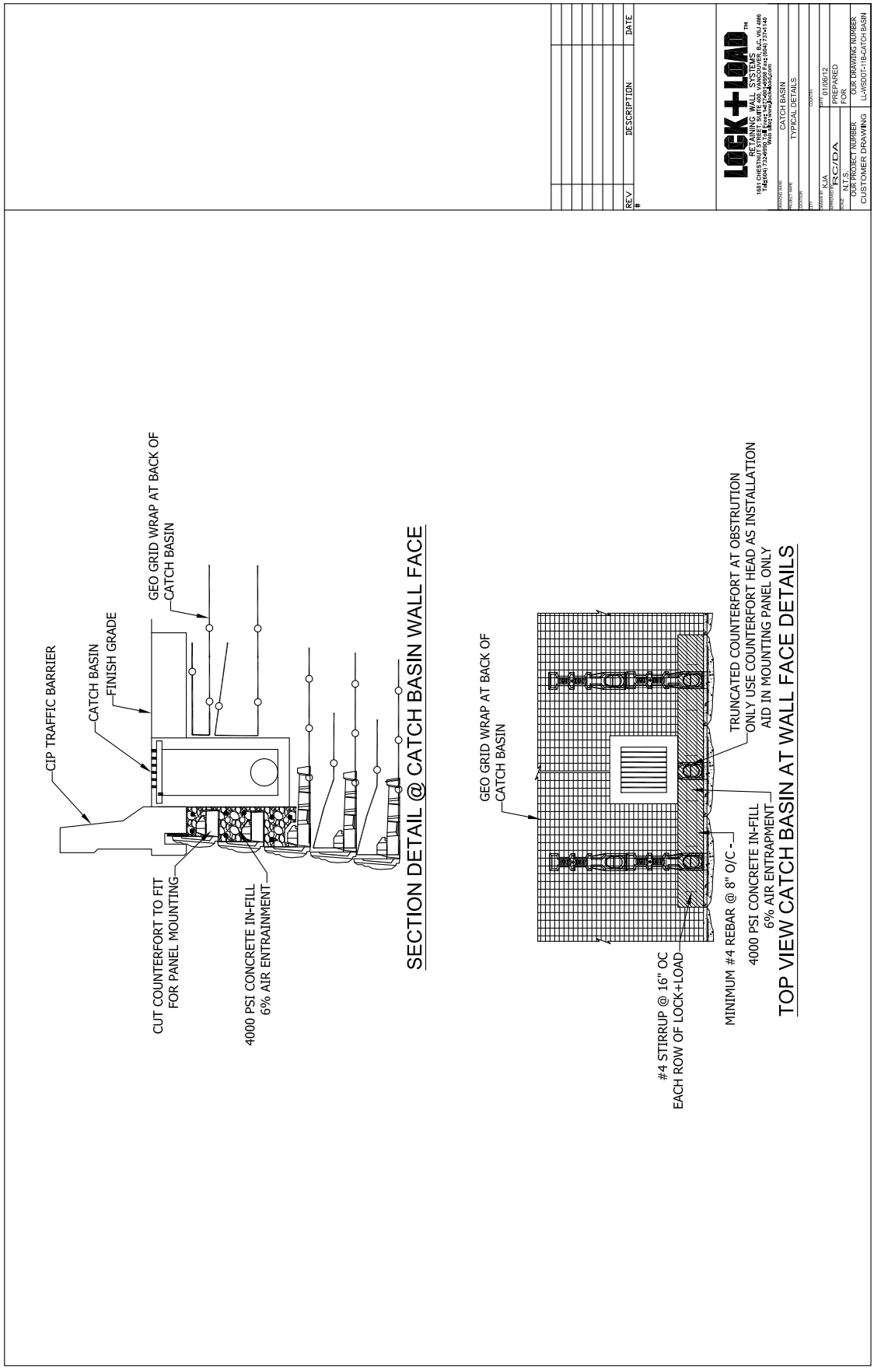
CIP TRAFFIC BARRIER
CATCH BASIN
FINISH GRADE
GEO GRID WRAP AT BACK OF CATCH BASIN
CUT COUNTERFORT TO FIT FOR PANEL MOUNTING
4000 PSI CONCRETE IN-FILL 6% AIR ENTRAINMENT
SECTION DETAIL @ CATCH BASIN WALL FACE
GEO GRID WRAP AT BACK OF CATCH BASIN
TRUNCATED COUNTERFORT AT OBSTRUTION ONLY USE COUNTERFORT HEAD AS INSTALLATION AID IN MOUNTING PANEL ONLY
#4 STIRRUP @ 16" OC EACH ROW OF LOCK+LOAD
MINIMUM #4 REBAR @ 8" O/C
4000 PSI CONCRETE IN-FILL 6% AIR ENTRAPMENT
TOP VIEW CATCH BASIN AT WALL FACE DETAILS
REV #
DESCRIPTION
DATE
LOCK+LOAD
RETAINING WALL SYSTEMS
CATCH BASIN
TYPICAL DETAILS
K.IA
01/06/12
FHWA
N.T.S.
PREPARED FOR
OUR PROJECT NUMBER
CUSTOMER DRAWING
OUR DRAWING NUMBER
LL-WSOOT-118-CATCH BASIN

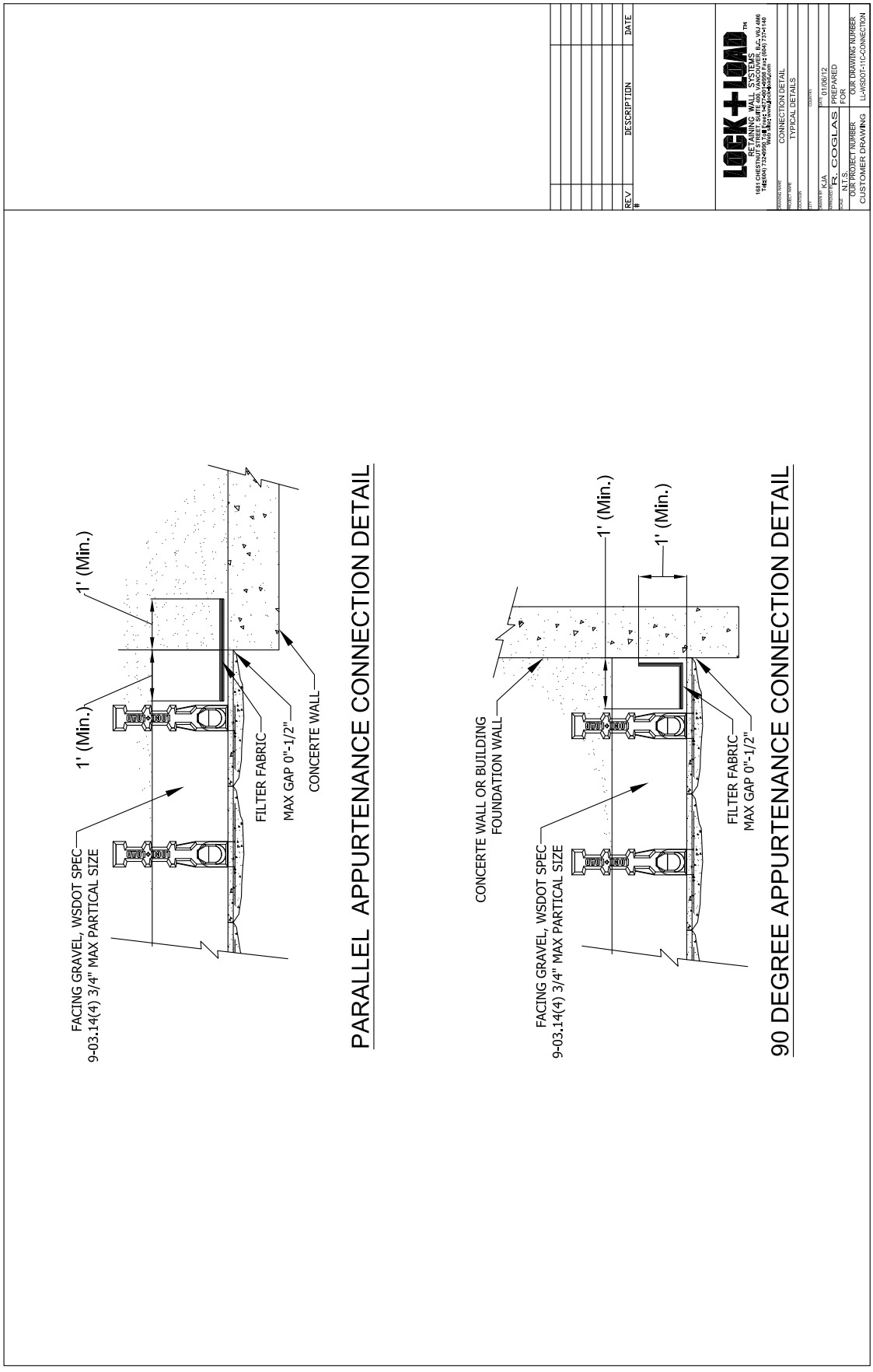
1' (Min.)
1' (Min.)
FACING GRAVEL, WSDOT SPEC
9-03.14(4) 3/4" MAX PARTICAL SIZE
FILTER FABRIC
MAX GAP 0"-1/2"
CONCERTE WALL
PARALLEL APPURTENANCE CONNECTION DETAIL
1' (Min.)
1' (Min.)
CONCERTE WALL OR BUILDING
FOUNDATION WALL
FACING GRAVEL, WSDOT SPEC
9-03.14(4) 3/4" MAX PARTICAL SIZE
FILTER FABRIC
MAX GAP 0"-1/2"
90 DEGREE APPURTENANCE CONNECTION DETAIL
REV #
DESCRIPTION
DATE
LOCK+LOAD
RETAINING WALL SYSTEMS
CONNECTION DETAIL
TYPICAL DETAILS
K.IA
01/06/12
R. COGLAS
PREPARED FOR
N.T.S.
OUR PROJECT NUMBER
OUR DRAWING NUMBER
CUSTOMER DRAWING
LL-WSDOT-11C-CONNECTION

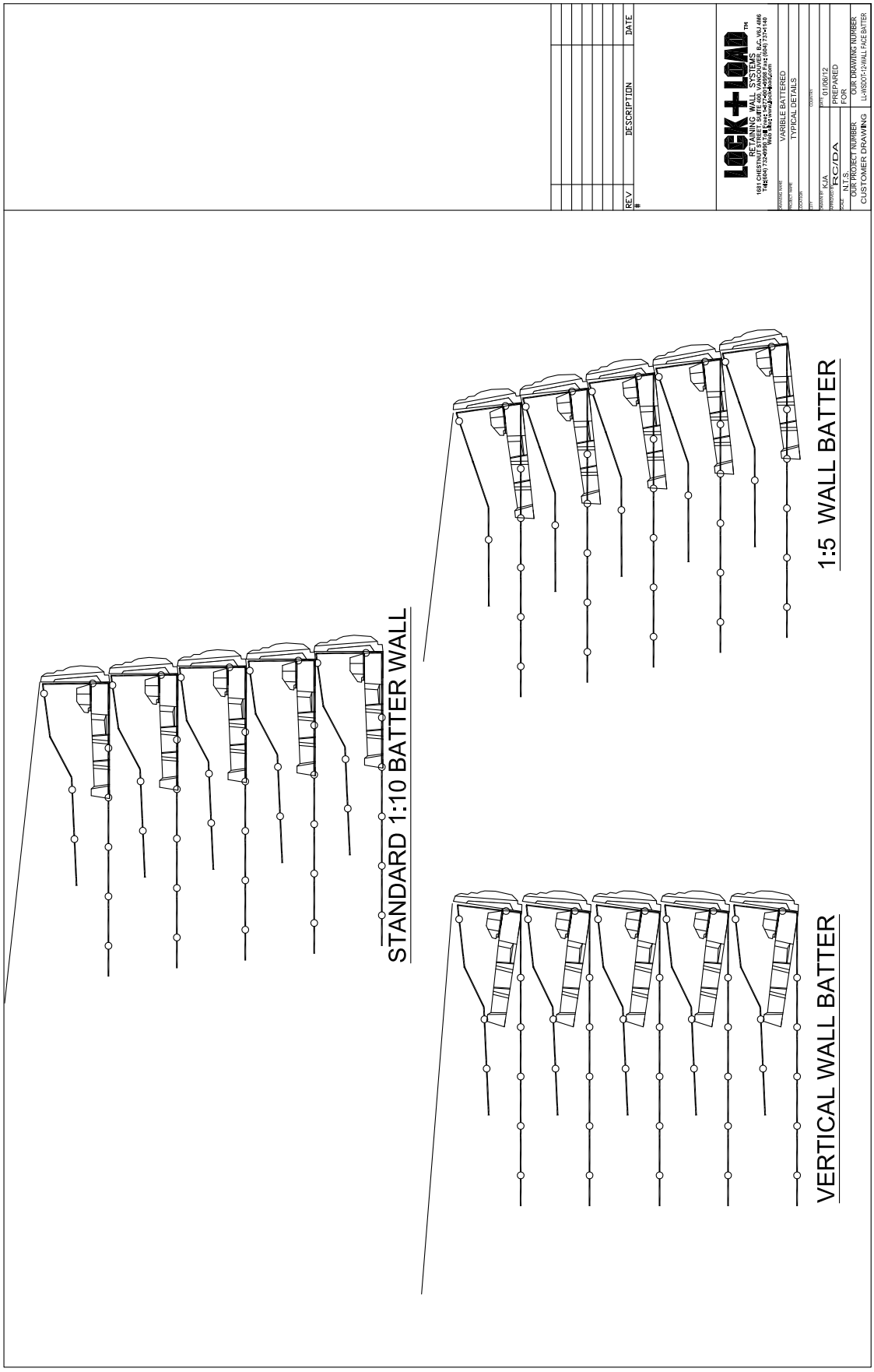
STANDARD 1:10 BATTER WALL
1:5 WALL BATTER
VERTICAL WALL BATTER
REV
DESCRIPTION
DATE
LOCK+LOAD
RETAINING WALL SYSTEMS
VARIBLE BATTERED
TYPICAL DETAILS
KJA
01/06/12
PREPARED FOR
N.T.S.
OUR PROJECT NUMBER
CUSTOMER DRAWING
OUR DRAWING NUMBER
LL-WSDOT-12-WALL FACE BATTER

Appendix 15-S Preapproved Wall Appendix: Specific Requirements and Details for KeyGrid Walls

In addition to the general design requirements provided in Appendix 15-A, the following specific requirements apply:

Facing Blocks –Blocks acceptable for use with this wall system are Keystone Compac II and Compac III units (block width into the wall W_u = 1 ft for both units). These blocks are for a facing batter of 1:64. Considering the currently approved block dimensions, the maximum vertical spacing of reinforcement allowed to meet the requirements in the AASHTO Specifications is 2 ft.

Soil Reinforcement – Only geosynthetic reinforcement listed in the WSDOT QPL and which has been evaluated for connection strength with the KeyGrid wall system shall be used. The following products are approved for use with this wall system:

Miragrid 3XT
Miragrid 5XT
Miragrid 7XT
Miragrid 8XT
Miragrid 10XT

Reinforcement pullout shall be calculated based on the default values for geogrid reinforcement provided in the AASHTO Specifications.

Reinforcement/Facing Block Connection Requirements – The connection between the Compac II and III facing units and the geosynthetic reinforcement is essentially a frictional connection. That being the case, the connection resistance is strongly dependent on the normal force between blocks and in the gravel in-fill inside the blocks. The design facing/reinforcement connection strength shall be as specified in the following tables:

Table 15-S-1 Approved connection strength design values for KeyGrid walls, Compac II blocks

Geogrid Product	Wall Height, H (ft)	Normal Load, N (lbs/ft)	$T_{ultconn}$ (lbs/ft)	T_{lot} (lbs/ft)
Miragrid 3XT	H < 9 9 < H < 18.9 H > 18.9	N < 1074 1074 < N < 2268 N > 2268	915 + N tan 45º 1465 + N tan 26º 2571	3484
Miragrid 5XT	H < 15.3 15.3 < H < 28.5 H > 28.5	N < 1837 1837 < N < 3424 N > 3424	1706 + N tan 20º 2020 + N tan 11º 2686	4927
Miragrid 7XT	H < 14.2 14.2 < H < 28.5 H > 28.5	N < 1711 1711 < N < 3417 N > 3417	959 + N tan 42º 1970 + N tan 26º 3637	6317
Miragrid 8XT	H < 12.5 12.5 < H < 28.2 H > 28.2	N < 1500 1500 < N < 3389 N > 3389	1064 + N tan 43º 1361 + N tan 37º 3845	7897
Miragrid 10XT	H < 8.1 8.1 < H < 28.2 H > 28.2	N < 970 970< N < 2903 N > 2903	1335 + N tan 49.5º 1980 + N tan 27º 3459	10795

N = normal load at reinforcement layer at facing, in lbs/ft of width parallel to face.

Table 15-S-2 Approved ultimate connection strength design values $T_{ultconn}$ for KeyGrid walls, Compac III blocks

Geogrid Product	Approx. Wall Height, H (ft)	Normal Load, N (lbs/ft)	$T_{ultconn}$ (lbs/ft)	T_{lot} (lbs/ft)
Miragrid 3XT	H < 9 H < 20 H > 20	N < 1030 1030 < N < 2268 N > 2268	937 + N tan 44º 1500 + N tan 22º 2416	3484
Miragrid 5XT	H < 16 H < 30 H > 30	N < 1724 1724 < N < 3424 N > 3424	1305 + N tan 36º 2045 + N tan 16º 3030	4927
Miragrid 7XT	H < 16 H < 30 H > 30	N < 1681 N < 3479 N > 3479	1221 + N tan 37º 1642 + N tan 26º 3339	6109
Miragrid 8XT	H < 16 H < 30 H > 30	N < 1695 N < 3380 N > 3380	1146 + N tan 42º 1657 + N tan 31º 3688	7897
Miragrid 10XT	H < 16 H > 16 H > 30	N < 1695 1695 < N < 3373 3373	1094 + N tan 45º 1640 + N tan 33º 3830	10795

N = normal load at reinforcement layer at facing, in lbs/ft of width parallel to face.

T_{ac}, the long-term connection strength, shall be calculated as follows:

$$T_{ac} = \frac{T_{MARV} \bullet CR_u}{RF_{CR} \bullet RF_D} \qquad \text{(15-S-1)}$$

where,

T_{MARV} = the minimum average roll value for the ultimate geosynthetic strength T_{ult},

CR_u = $T_{ultconn}/T_{lot}$, in which $T_{ultconn}$ is the ultimate connection strength and T_{lot} is the lot specific ultimate tensile strength, (i.e., the lot or roll of material specific to the connection testing),

RF_{CR} = creep reduction factor for the geosynthetic, and

RF_D = the durability reduction factor for the geosynthetic.

RF_D shall be as provided in the WSDOT QPL, Appendix D (i.e., RF_D = 1.3). RF_{CR} for the connection strength shall be equal to 1.2 for connections with Compac II and Compac III blocks based on long-term connection strength tests conducted for some of the block/geogrid combinations tested.

Approved details for the KeyGrid wall system are provided in the following plan sheets. Exceptions and additional requirements regarding these approved details and the wall system in general are as follows:

- Drawings 5A and 5B: Cords in the wall facing alignment to form a radius shall be no shorter than the roll width of the geosynthetic reinforcing.
- Applies to retaining wall heights up to a maximum of 33 feet.
- Applies to retaining walls having a wall face batter of 1H:64V.
- The culvert penetration and obstruction avoidance details are preapproved up to a diameter of 4 feet.
- The specifications for the fiberglass pins shall match the technical requirements submitted during the preapproval process.
- It is noted in ASTM C1372 that a dimensional tolerance for the height of the block of ⅛ inch is allowed, but that WSDOT GDM Section 15.5.3.8 recommends a tighter dimensional tolerance of 1/16 inch. Based on WSDOT experience, for walls greater than 25 ft in height, some cracking of facing blocks due to differential vertical stresses tends to occur in the bottom portion of the wall. Therefore, blocks placed at depths below the wall top of 25 ft or more should be cast to a vertical dimensional tolerance of 1/16 inch to reduce the risk of significant cracking of facing blocks.

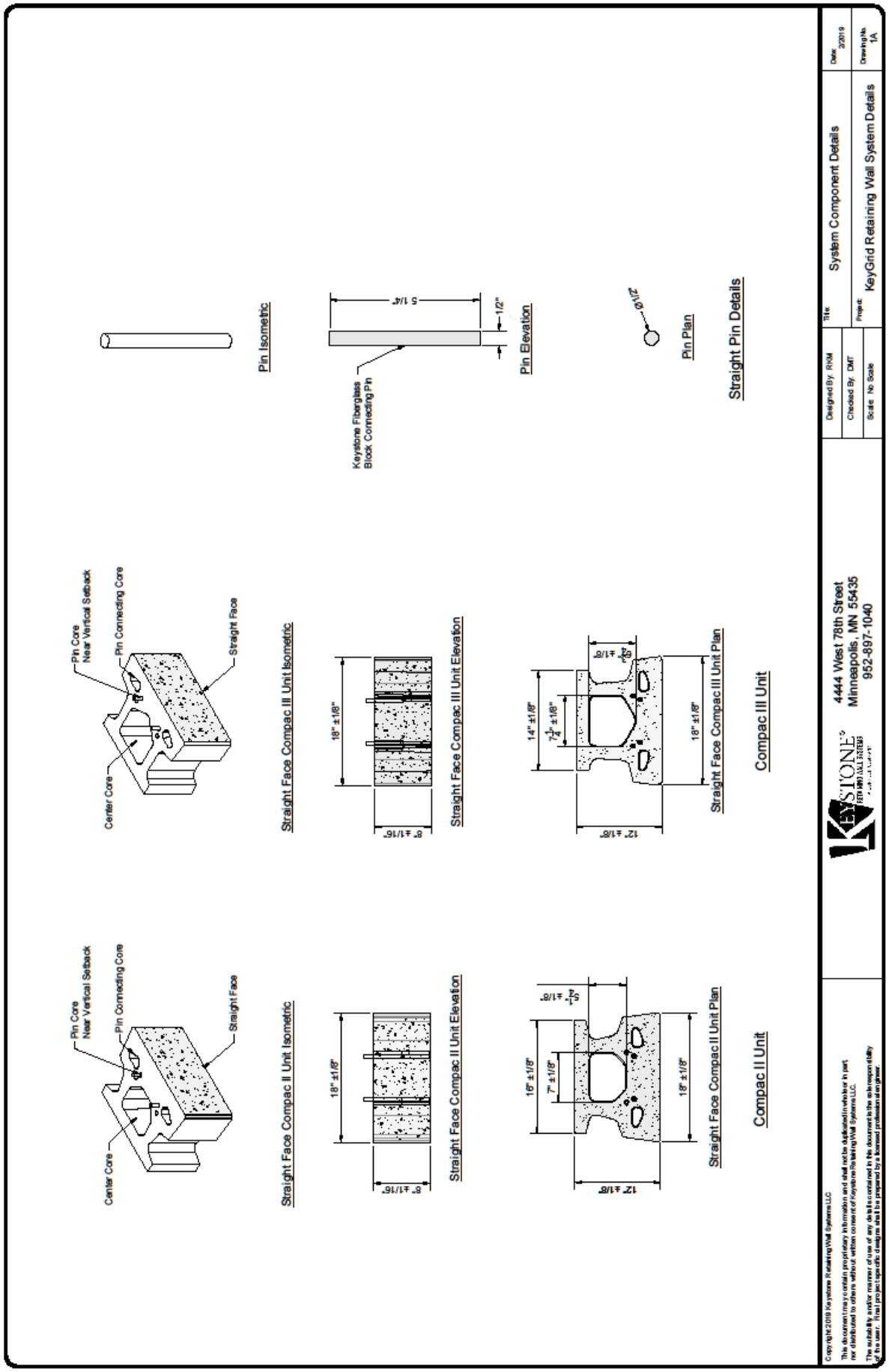
Straight Pin Details
Pin Isometric
Pin Elevation
Pin Plan
Keystone Fiberglass Block Connecting Pin
5 1/4"
1/2"
Ø1/2"
Straight Face Compac III Unit Isometric
Straight Face Compac III Unit Elevation
Straight Face Compac III Unit Plan
Compac III Unit
Straight Face Compac II Unit Isometric
Straight Face Compac II Unit Elevation
Straight Face Compac II Unit Plan
Compac II Unit
Pin Core Near Vertical Setback
Pin Connecting Core
Straight Face
Center Core
18" ±1/8"
8" ±1/16"
14" ±1/8"
7¼" ±1/8"
12" ±1/8"
16" ±1/8"
7" ±1/8"
KEYSTONE
4444 West 78th Street
Minneapolis, MN 55435
952-897-1040
Designed By: RNM
Checked By: DMT
Scale: No Scale
Title: System Component Details
Project: KeyGrid Retaining Wall System Details
Date: 2/2019
Drawing No. 1A
Copyright 2019 Keystone Retaining Wall Systems LLC
This document may contain proprietary information and shall not be duplicated in whole or in part, nor distributed to others without written consent of Keystone Retaining Wall Systems LLC.
The suitability and/or manner of use of any data contained in this document is the sole responsibility of the user. Final project specific designs shall be prepared by a licensed professional engineer.

Appendix 15-T Preapproved Wall Appendix: Specific Requirements and Details for Basalite GEOWALL

In addition to the general design requirements provided in Appendix 15-A, the following specific requirements apply:

Facing Blocks – Blocks acceptable for use with this wall system include the GEOWALL Pro, GEOWALL Max, and GEOWALL Max II. Considering the currently approved block dimensions, the maximum vertical spacing of reinforcement allowed to meet the requirements in the AASHTO Specifications is 2.7 ft (i.e., up to four 8 in. thick blocks). Blocks are set at a near vertical 1H:64V batter. Considering the currently approved block dimensions, the maximum vertical spacing of reinforcement allowed to meet the requirements in the AASHTO Specifications is 2 ft for the GEOWALL Pro (i.e., $2*W_u$), and 2.7 ft for the GEOWALL Max and GEOWALL Max II.

Soil Reinforcement – Only geosynthetic reinforcement listed in the WSDOT QPL and which has been evaluated for connection strength with the Basalite GEOWALL system shall be used. The following specific products that are approved for use with this wall system:

Miragrid 3XT	Stratagrid SG200
Miragrid 5XT	Stratagrid SG350
Miragrid 7XT	Stratagrid SG500
Miragrid 8XT	Stratagrid SG550
Miragrid 10XT	Stratagrid SG600

Reinforcement/Facing Block Connection Requirements – The connection between Basalite GEOWALL block facing units and the geosynthetic reinforcement is essentially a frictional connection. That being the case, the connection resistance is strongly dependent on the normal force between blocks and in the gravel in-fill inside the blocks. Connection testing was done for the range of blocks and geosynthetic reinforcements preapproved for this wall system. The design facing/reinforcement connection strength shall be as specified in the following table:

T_{ac}, the long-term connection strength, shall be calculated as follows:

$$T_{ac} = \frac{T_{MARV} \bullet CR_u}{RF_{CR} \bullet RF_D} \qquad \text{(15-T-1)}$$

where,

T_{MARV} = the minimum average roll value for the ultimate geosynthetic strength T_{ult},

CR_u = $T_{ultconn}/T_{lot}$, in which $T_{ultconn}$ is the ultimate connection strength and T_{lot} is the lot specific ultimate tensile strength, (i.e., the lot or roll of material specific to the connection testing),

RF_{CR} = creep reduction factor for the geosynthetic, and

RF_D = the durability reduction factor for the geosynthetic.

RF_{CR} and RF_D shall be as provided in the WSDOT QPL, Appendix D.

Table 15-T-1 Approved connection strength design values for Basalite GEOWALL

SRW Facing Unit	Geogrid Product Line	Geogrid Product Designation	Normal Load, N (lbs/ft)	$T_{ultconn}$ (lbs/ft)	T_{lot} (lbs/ft)
GEOWALL Pro W_u = 12 in.	StrataGrid	SG200	σ_N < 1427 σ_N > 1427	σ_N*Tan(38°) + 756 1892	3724
GEOWALL Pro W_u = 12 in.	StrataGrid	SG350	σ_N < 2967 σ_N > 2967	σ_N*Tan(23°) + 1077.5 2353	5211
GEOWALL Pro W_u = 12 in.	StrataGrid	SG500	σ_N < 2983 σ_N > 2983	σ_N*Tan(30°) + 1060 2814	6751
GEOWALL Pro W_u = 12 in.	StrataGrid	SG550	σ_N < 3100 σ_N > 3100	σ_N*Tan(36°) + 1076 3328	8247
GEOWALL Pro W_u = 12 in.	StrataGrid	SG600	σ_N < 3000 σ_N > 3000	σ_N*Tan(33°) + 1252 3200	9553
GEOWALL Pro W_u = 12 in.	Mirafi	3XT	σ_N < 1975 σ_N > 1975	σ_N*Tan(38°) + 1060 2603	3994
GEOWALL Pro W_u = 12 in.	Mirafi	5XT	σ_N < 3062 σ_N > 3062	σ_N*Tan(29°) + 1339 2593	5334
GEOWALL Pro W_u = 12 in.	Mirafi	7XT	σ_N < 2776 σ_N > 2776	σ_N*Tan(35°) + 1087 3102	6442
GEOWALL Pro W_u = 12 in.	Mirafi	8XT	σ_N < 3100 σ_N > 3100	σ_N*Tan(38°) + 1178 3600	7898
GEOWALL Pro W_u = 12 in.	Mirafi	10XT	σ_N < 3003 σ_N > 3003	σ_N*Tan(36°) + 1130 3312	10973
GEOWALL Max W_u =21 in	StrataGrid	SG200	(1.75σ_N) < 1643 (1.75σ_N) > 1643	(1.75σ_N)*Tan(37°) + 1246 (1.75σ_N)*Tan(12°) + 2135	3724
GEOWALL Max W_u =21 in	StrataGrid	SG350	(1.75σ_N) < 2777 (1.75σ_N) > 2777	(1.75σ_N)*Tan(31°) + 1471 (1.75σ_N)*Tan(10°) + 2650	5211
GEOWALL Max W_u =21 in	StrataGrid	SG500	(1.75σ_N) < 2674 (1.75σ_N) > 2674	(1.75σ_N)*Tan(33°) + 1605 (1.75σ_N)*Tan(15°) + 2622	6751
GEOWALL Max W_u =21 in	StrataGrid	SG550	(1.75σ_N) < 2796 (1.75σ_N) > 2796	(1.75σ_N)*Tan(41°) + 1580 (1.75σ_N)*Tan(22°) + 2881	8427
GEOWALL Max W_u =21 in	StrataGrid	SG600	(1.75σ_N) < 2799 (1.75σ_N) > 2799	(1.75σ_N)*Tan(44°) + 1768 (1.75σ_N)*Tan(14°) + 3773	9553
GEOWALL Max W_u =21 in	Mirafi	3XT	(1.75σ_N) < 1651 (1.75σ_N) > 1651	(1.75σ_N)*Tan(45°) + 1314 (1.75σ_N)*Tan(5°) + 2821	3994
GEOWALL Max W_u =21 in	Mirafi	5XT	(1.75σ_N) < 1941 (1.75σ_N) > 1941	(1.75σ_N)*Tan(64°) + 23 (1.75σ_N)*Tan(1°) + 3921	5334
GEOWALL Max W_u =21 in	Mirafi	7XT	(1.75σ_N) < 2700 (1.75σ_N) > 2700	(1.75σ_N)*Tan(44°) + 1611 (1.75σ_N)*Tan(9°) + 3791	6442
GEOWALL Max W_u =21 in	Mirafi	8XT	(1.75σ_N) < 2763 (1.75σ_N) > 2763	(1.75σ_N)*Tan(52°) + 1294 (1.75σ_N)*Tan(13°) + 4193	7898
GEOWALL Max W_u =21 in	Mirafi	10XT	(1.75σ_N) < 2226 (1.75σ_N) > 2226	(1.75σ_N)*Tan(53°) + 1240 (1.75σ_N)*Tan(26°) + 3108	10973
GEOWALL Max II, W_u = 18 in	StrataGrid	SG200	(1.5σ_N) < 2700 (1.5σ_N) > 2700	(1.5σ_N)*Tan(15°) + 1540 2260	3724

Table 15-T-1 Approved connection strength design values for Basalite GEOWALL

SRW Facing Unit	Geogrid Product Line	Geogrid Product Designation	Normal Load, N (lbs/ft)	$T_{ultconn}$ (lbs/ft)	T_{lot} (lbs/ft)
GEOWALL Max II, W_u = 18 in	StrataGrid	SG350	$(1.5\sigma_N) < 3600$ $(1.5\sigma_N) > 3600$	$(1.5\sigma_N)$*Tan(16°) + 1650 2680	5211
GEOWALL Max II, W_u = 18 in	StrataGrid	SG500	$(1.5\sigma_N) < 4500$ $(1.5\sigma_N) > 4500$	$(1.5\sigma_N)$*Tan(24°) + 1570 3570	6751
GEOWALL Max II, W_u = 18 in	StrataGrid	SG600	$(1.5\sigma_N) < 6300$ $(1.5\sigma_N) > 6300$	$(1.5\sigma_N)$*Tan(26°) + 2125 5200	9553

Notes:

1. MSEW's input is in lb/ft^2 of surface area. Testing reports lb/ft of wall face.
2. Input is based on W_u * N, where W_u is the width of the block into the wall in ft, to get the correct input values. Using N as the normal load in the connection test (ASTM D6638), then for MSEW, σ_N is determined as:
   a. N for Geowall Pro is $1.0\sigma_N$,
   b. N for GEOWALL Max is $1.75\sigma_N$,
   c. N for GEOWALL Max II is $1.5\sigma_N$.
   d. The regressions used to generate the $T_{ultconn}$ equations relate the normal force on the facing blocks in lbs/ft of reinforcement width to the connection strength, in lbs/ft. For example, for (b) above, N is carried by the surface area of the block and therefore σ_N is (N lbs/ft)/(1.75 ft) to get stress in psf. Therefore, to get N from σ_N, use $N = 1.75\sigma_N$.

Reinforcement pullout shall be calculated based on the default values for geogrid reinforcement provided in the AASHTO Specifications.

Approved details for the Basalite GEOWALL system wall system are provided in the following plan sheets. Exceptions and additional requirements regarding these approved details and the wall system in general are as follows:

- It is noted in ASTM C1372 that a dimensional tolerance for the height of the block of ⅛ inch is allowed, but that WSDOT GDM Section 15.5.3.8 recommends a tighter dimensional tolerance of 1/16 inch. Based on WSDOT experience, for walls greater than 25 ft in height, some cracking of facing blocks due to differential vertical stresses tends to occur in the bottom portion of the wall. Therefore, blocks placed at depths below the wall top of 25 ft or more should be cast to a vertical dimensional tolerance of 1/16 inch to reduce the risk of significant cracking of facing blocks.
- Applies to retaining wall heights up to a maximum of 33 feet.
- Applies to retaining walls having a wall face batter of 1:64.
- The culvert penetration and obstruction avoidance details are preapproved up to a diameter of 4 feet.
- The cast-in-place concrete collar to be constructed around pipes that are protruding through the wall face is considered non-preapproved. Detailed stamped drawings and stamped engineering calculations are to be submitted for approval on a project specific basis.
- The specifications for the fiberglass pins shall match the technical requirements submitted during the preapproval process.
- The geosynthetic reinforcement strength calculations shall be based on the values provided in the latest version of the WSDOT Qualified Products List, Appendix D.

BASALITE®
CONCRETE PRODUCTS, LLC

CONSTRUCTION DRAWINGS
Prepared for

STATE OF WASHINGTON
DEPARTMENT OF TRANSPORTATION

The 3 Plane units are not approved for use on WSDOT projects. See WSDOT Standard Specification 6-13.3(4).
This restriction applies to all subsequent plan sheets that show the 3 Plane unit shape.

GEOWALL™ System

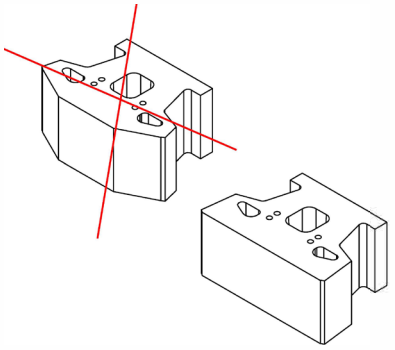

GEOWALL Pro

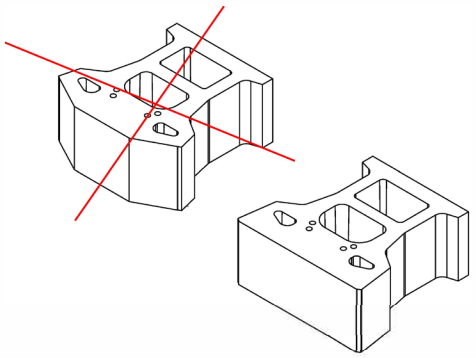

GEOWALL Max II

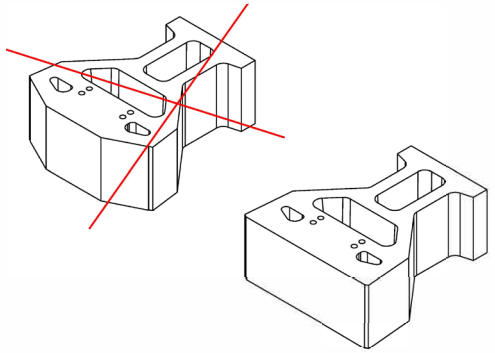

GEOWALL Max

BASALITE®
CONCRETE PRODUCTS, LLC
www.basalite.com

No.	Date	Revision	By

Designed By: par
Scale: As Noted
Date: 8/29/2012

Project: WSDOT GEOWALL™
Title: GEOWALL Details
Project No:
Sheet No. 1 of 12

The information on this drawing is for conceptual design and should not be used without the signature of a professional engineer. Details should be specific to the project and project site requirements.

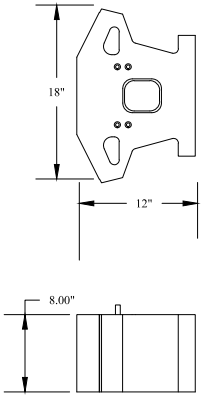

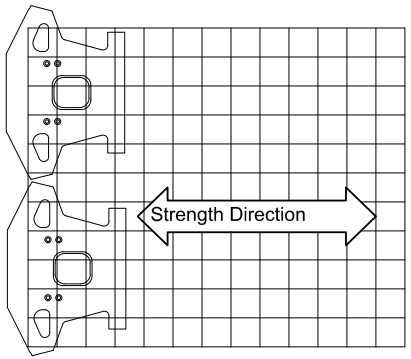

Geogrid is to be placed on level backfill over the fiberglass pins. Place next unit. Pull grid taut and backfill. Stake as required.

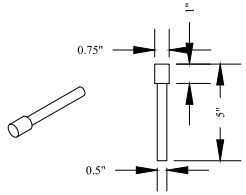

Shouldered Pin

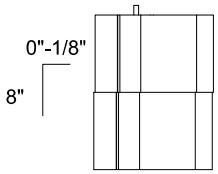

Near Vertical

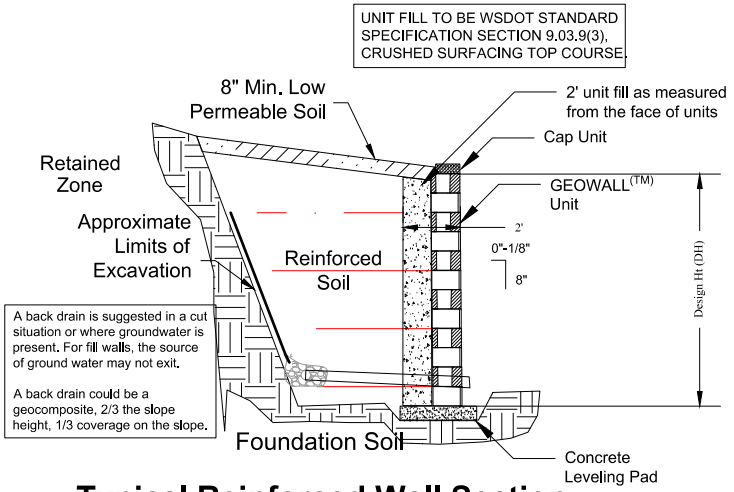

Typical Reinforced Wall Section

Near Vertical Setback

1/4" = 1'

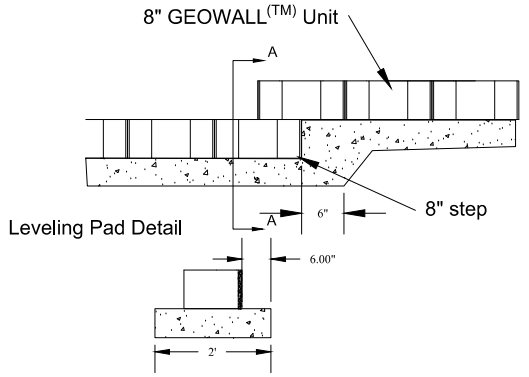

Leveling Pad Detail

Section A-A

BASALITE® CONCRETE PRODUCTS, LLC

www.basalite.com

No.	Date	Revision	By

Designed By: par
Scale: As Noted
Date: 8/29/2012

Project: WSDOT GEOWALL™
Title: GEOWALL Pro Details
Project No:
Sheet No. 2 of 12

The information on this drawing is for conceptual design and should not be used without the signature of a professional engineer. Details should be specific to the project and project site requirements.

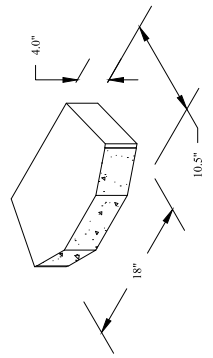

THREE PLANE, ANGLED SIDE CAP

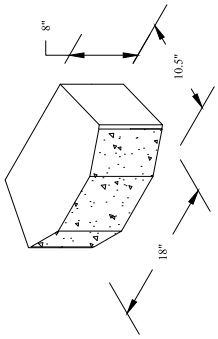

THREE PLANE, ANGLED SIDE CAP

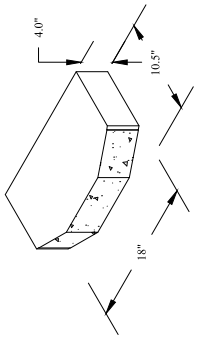

THREE PLANE, STRAIGHT SIDE CAP

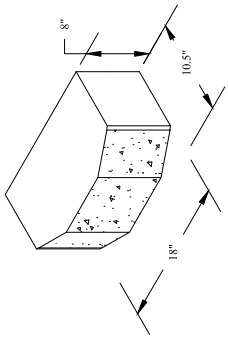

THREE PLANE, STRAIGHT SIDE CAP

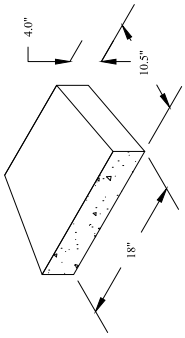

RECTANGULAR CAP / ANGLED SIDE CAP

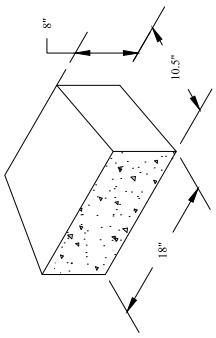

RECTANGULAR CAP/ ANGLED SIDE CAP

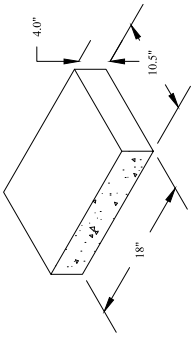

RECTANGULAR CAP

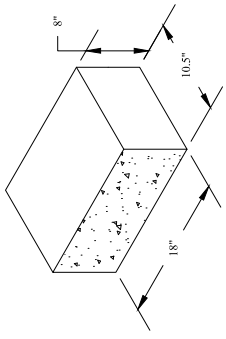

RECTANGULAR CAP

BASALITE® CONCRETE PRODUCTS, LLC

www.basalite.com

No.	Date	Revision	By

Designed By: par
Scale: As Noted
Date: 8/28/2012

Project: WSDOT GEOWALL™
Title: GEOWALL Cap Details
Project No:
Sheet No. 3 of 12

The information on this drawing is for conceptual design and should not be used without the signature of a professional engineer. Details should be specific to the project and project site requirements.

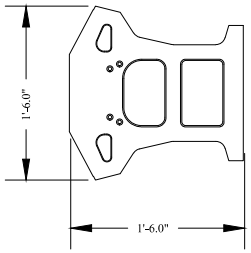

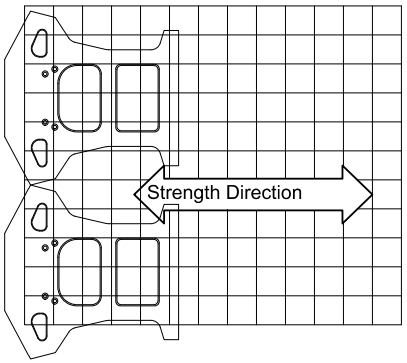

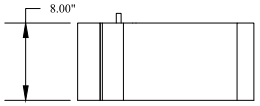

Geogrid is to be placed on level backfill over the fiberglass pins. Place next unit. Pull grid taut and backfill. Stake as required.

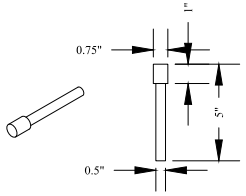

Shouldered Pin

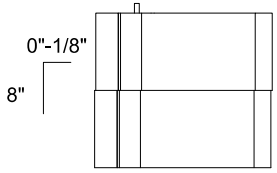

Near Vertical

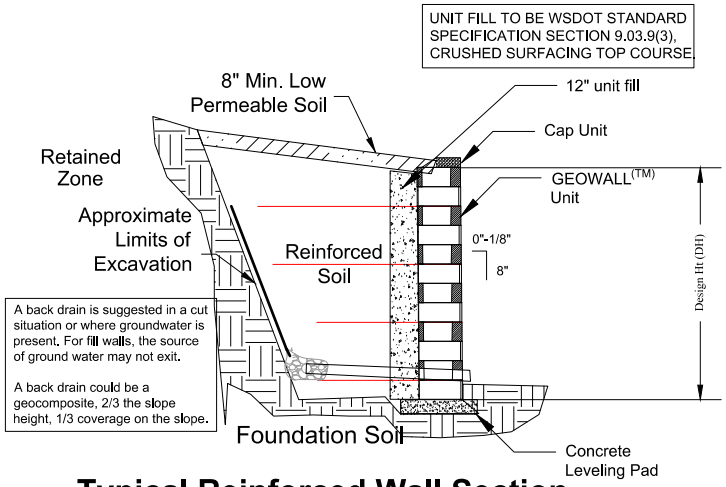

Typical Reinforced Wall Section

Near Vertical Setback

1/4" = 1'

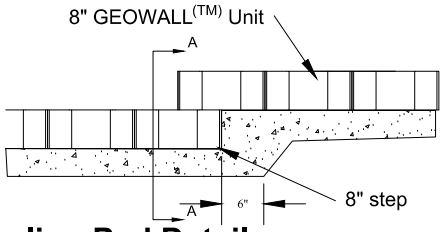

Leveling Pad Detail

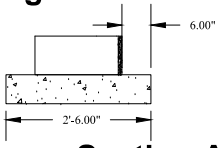

Section A-A

BASALITE® CONCRETE PRODUCTS, LLC

www.basalite.com

No.	Date	Revision	By

Designed By: par
Scale: As Noted
Date: 8/29/2012

Project: WSDOT GEOWALL™
Title: GEOWALL Max II Details
Project No:
Sheet No. 4 of 12

The information on this drawing is for conceptual design and should not be used without the signature of a professional engineer. Details should be specific to the project and project site requirements.

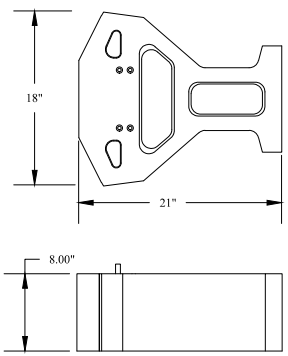

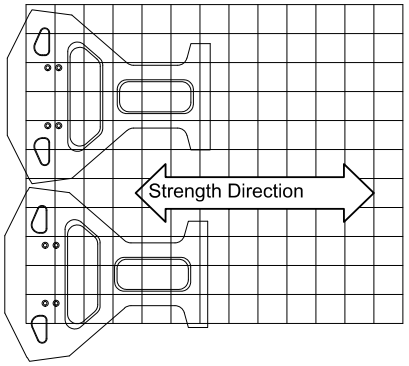

Geogrid is to be placed on level backfill over the fiberglass pins. Place next unit. Pull grid taut and backfill. Stake as required.

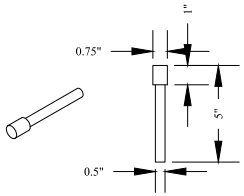

Shouldered Pin

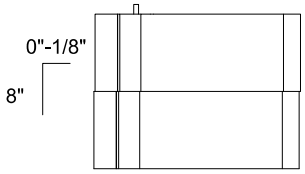

Near Vertical

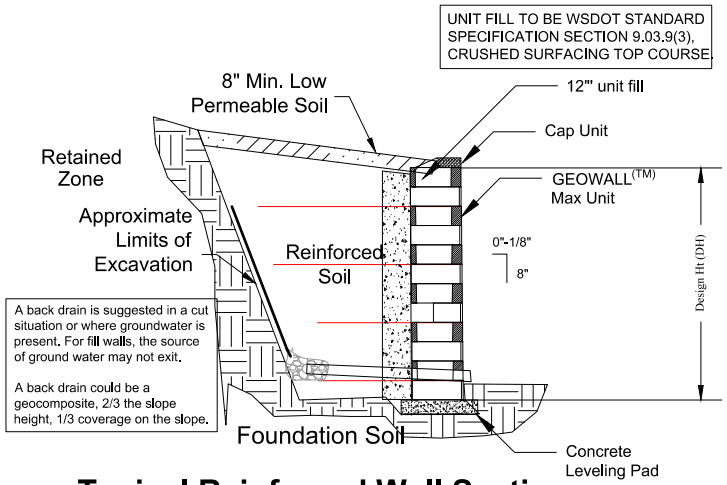

Typical Reinforced Wall Section

Near Vertical Setback

1/4" = 1'

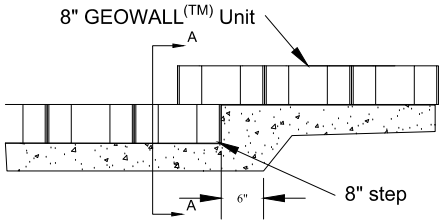

Leveling Pad Detail

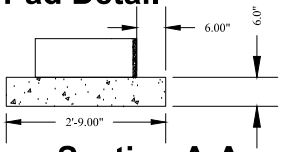

Section A-A

BASALITE® CONCRETE PRODUCTS, LLC

www.basalite.com

No.	Date	Revision	By

Designed By: par
Scale: As Noted
Date: 8/29/2012

Project: WSDOT GEOWALL™
Project No:
Title: GEOWALL Max Details
Sheet No. 5 of 12

The information on this drawing is for conceptual design and should not be used without the signature of a professional engineer. Details should be specific to the project and project site requirements.

NOTE:

1. FOR PIPES LARGER THEN 24", A CONCRETE COLLAR MAY BE CAST AROUND PIPE FOR EASE OF CONSTRUCTION AND APPEARANCE.

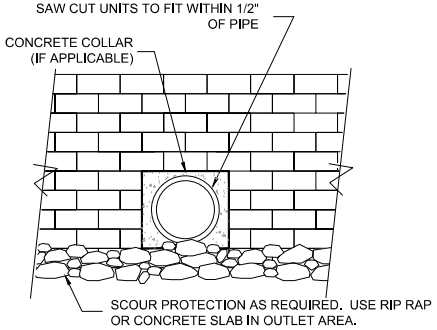

Typical Pipe Outlet Detail

SCALE: N.T.S.

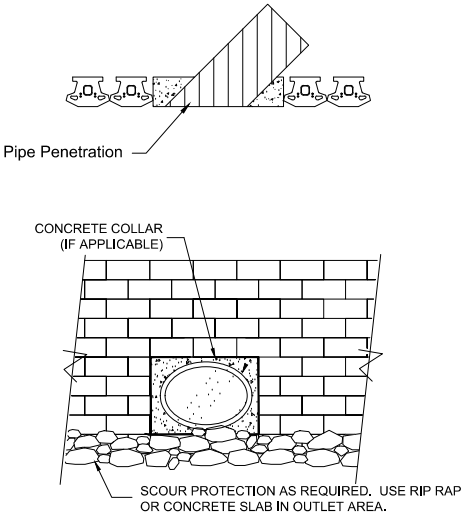

Angled Pipe Outlet Detail

SCALE: N.T.S.

For culverts oriented up to a 45 degree skew angle as measured from perpendicular to the wall face.

BASALITE® CONCRETE PRODUCTS, LLC

www.basalite.com

No.	Date	Revision	By

Designed By: PAR
Scale: As Noted
Date: 8/27/2012

Project: WSDOT GEOWALL™
Title: GEOWALL OBSTRUCTION DETAILS
Project No:
Sheet No. 6 of 12

The information on this drawing is for conceptual design and should not be used without the signature of a professional engineer. Details should be specific to the project and project site requirements.

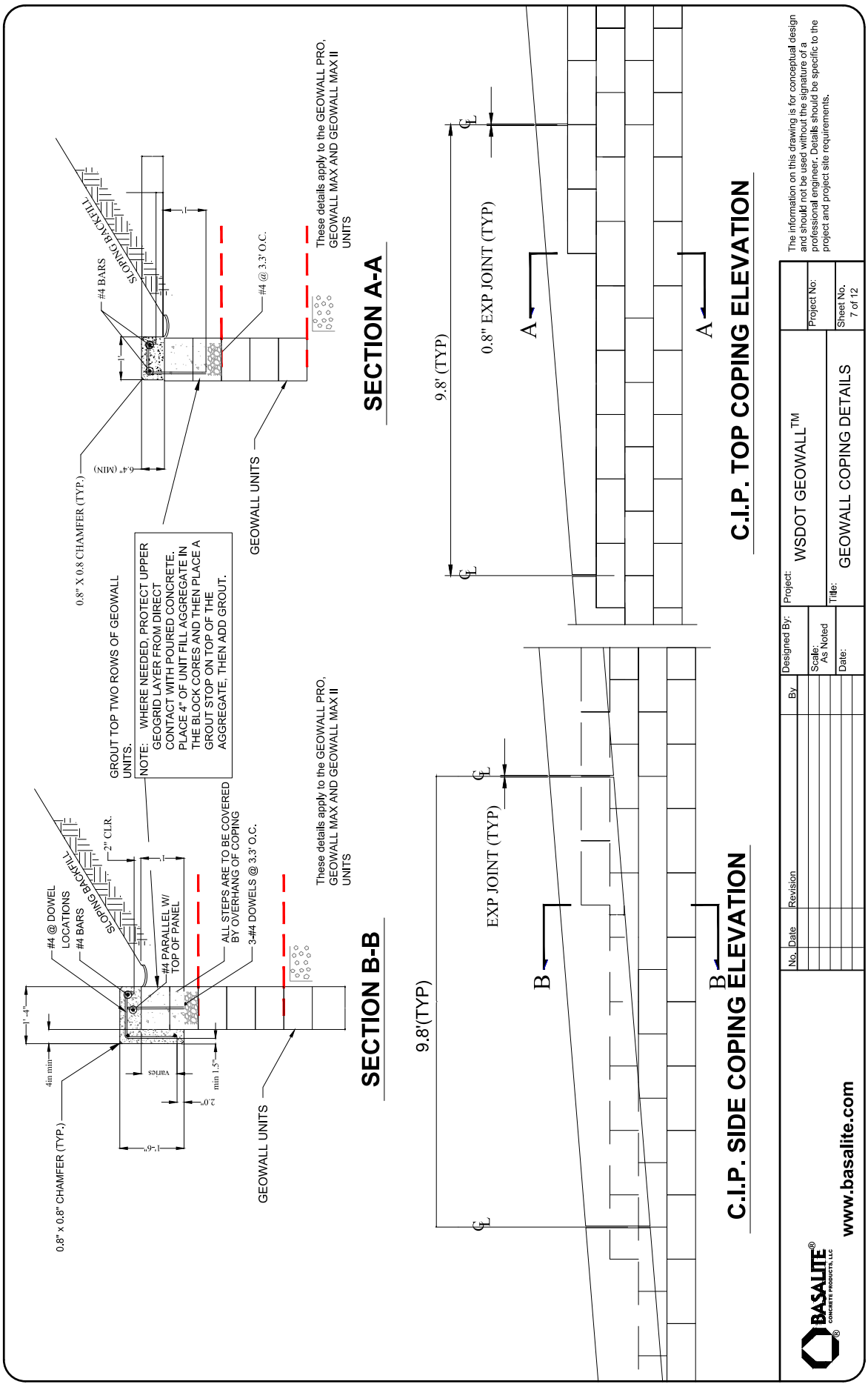
SECTION A-A
SECTION B-B
C.I.P. TOP COPING ELEVATION
C.I.P. SIDE COPING ELEVATION
0.8" X 0.8 CHAMFER (TYP.)
0.8" x 0.8" CHAMFER (TYP.)
SLOPING BACKFILL
#4 BARS
#4 @ 3.3' O.C.
#4 @ DOWEL LOCATIONS
#4 PARALLEL W/ TOP OF PANEL
ALL STEPS ARE TO BE COVERED BY OVERHANG OF COPING
3-#4 DOWELS @ 3.3' O.C.
GROUT TOP TWO ROWS OF GEOWALL UNITS.
NOTE: WHERE NEEDED, PROTECT UPPER GEOGRID LAYER FROM DIRECT CONTACT WITH POURED CONCRETE. PLACE 4" OF UNIT FILL AGGREGATE IN THE BLOCK CORES AND THEN PLACE A GROUT STOP ON TOP OF THE AGGREGATE, THEN ADD GROUT.
GEOWALL UNITS
These details apply to the GEOWALL PRO, GEOWALL MAX AND GEOWALL MAX II UNITS
9.8' (TYP)
0.8" EXP JOINT (TYP)
EXP JOINT (TYP)
9.8'(TYP)
The information on this drawing is for conceptual design and should not be used without the signature of a professional engineer. Details should be specific to the project and project site requirements.
Project: WSDOT GEOWALL™
Title: GEOWALL COPING DETAILS
Project No:
Sheet No. 7 of 12
Designed By:
Scale: As Noted
Date:
No. Date Revision By
BASALITE CONCRETE PRODUCTS, LLC
www.basalite.com

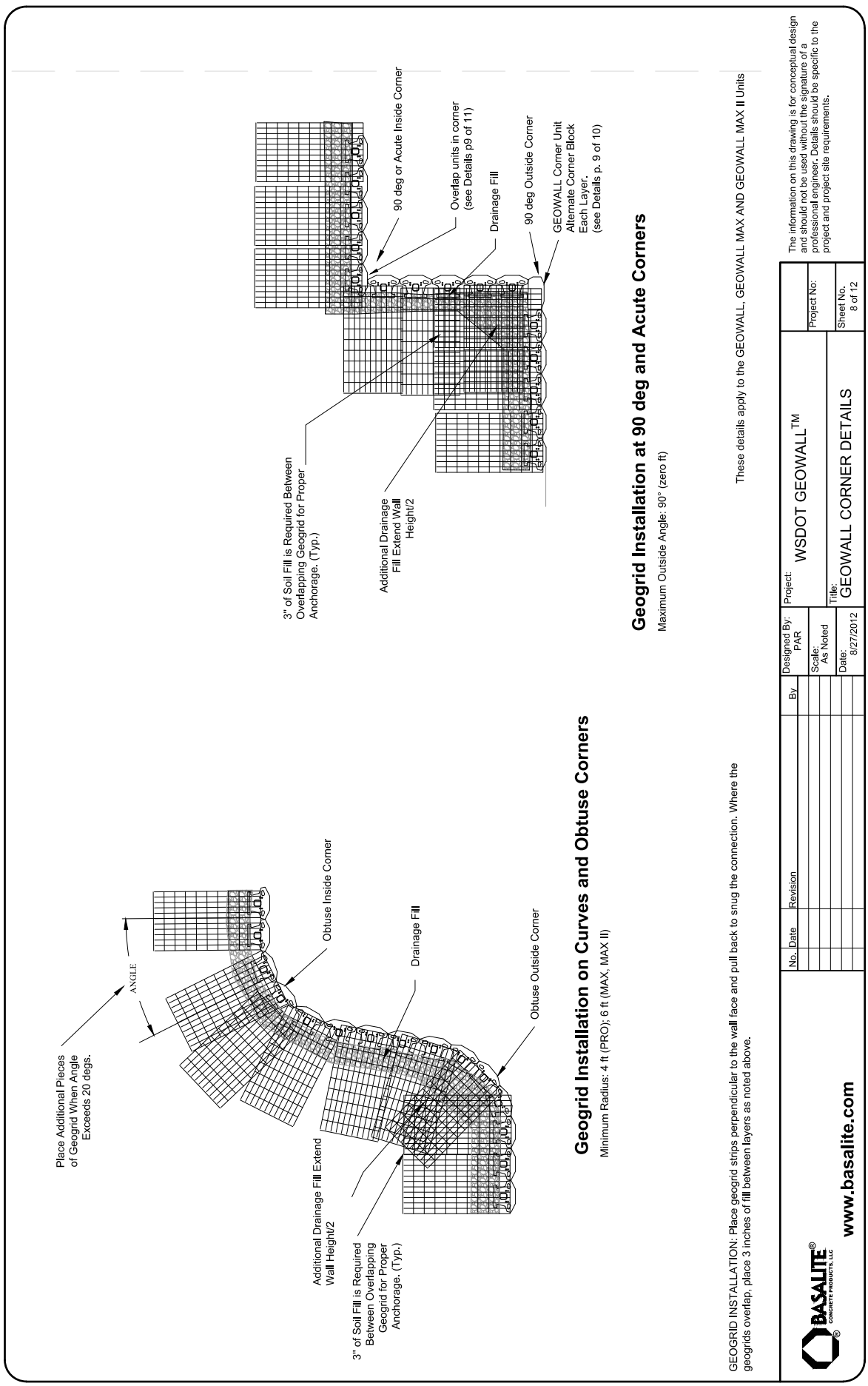
Geogrid Installation on Curves and Obtuse Corners
Minimum Radius: 4 ft (PRO); 6 ft (MAX, MAX II)
Place Additional Pieces of Geogrid When Angle Exceeds 20 degs.
ANGLE
Obtuse Inside Corner
Drainage Fill
Obtuse Outside Corner
Additional Drainage Fill Extend Wall Height/2
3" of Soil Fill is Required Between Overlapping Geogrid for Proper Anchorage. (Typ.)
Geogrid Installation at 90 deg and Acute Corners
Maximum Outside Angle: 90° (zero ft)
90 deg or Acute Inside Corner
Overlap units in corner (see Details p9 of 11)
Drainage Fill
90 deg Outside Corner
GEOWALL Corner Unit Alternate Corner Block Each Layer. (see Details p. 9 of 10)
3" of Soil Fill is Required Between Overlapping Geogrid for Proper Anchorage. (Typ.)
Additional Drainage Fill Extend Wall Height/2
These details apply to the GEOWALL, GEOWALL MAX AND GEOWALL MAX II Units
GEOGRID INSTALLATION: Place geogrid strips perpendicular to the wall face and pull back to snug the connection. Where the geogrids overlap, place 3 inches of fill between layers as noted above.
BASALITE CONCRETE PRODUCTS, LLC
www.basalite.com
No. Date Revision By
Designed By: PAR
Scale: As Noted
Date: 8/27/2012
Project: WSDOT GEOWALL™
Title: GEOWALL CORNER DETAILS
Project No:
Sheet No. 8 of 12
The information on this drawing is for conceptual design and should not be used without the signature of a professional engineer. Details should be specific to the project and project site requirements.

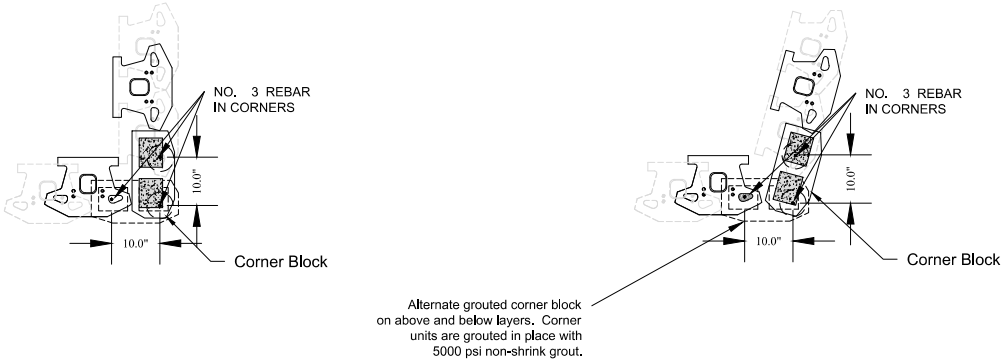

Outside and Obtuse Corners

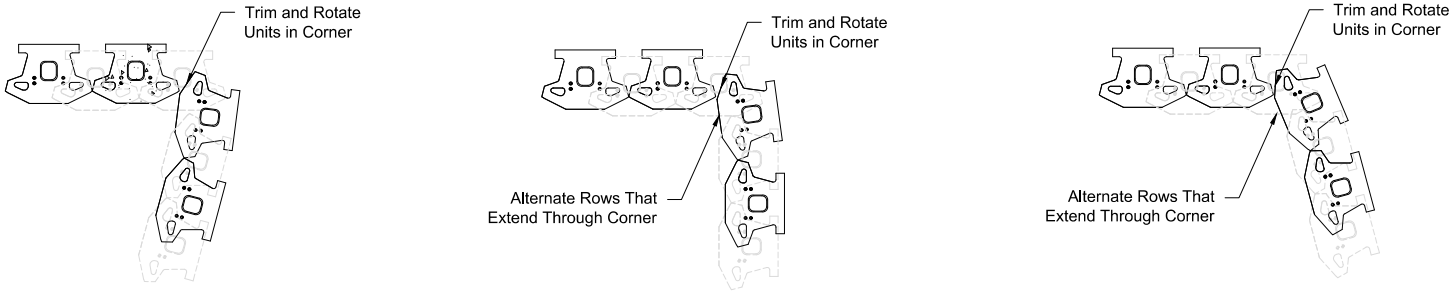

Inside and Acute Corners

Inside and Obtuse Corners

GEOGRID INSTALLATION: Place geogrid strips perpendicular to the wall face and pull back to snug the connection. Where the geogrids overlap, place 3 inches of fill between layers as noted above.

These details apply to the GEOWALL, GEOWALL MAX AND GEOWALL MAX II Units

BASALITE® CONCRETE PRODUCTS, LLC

www.basalite.com

No.	Date	Revision	By

Designed By: PAR
Scale: As Noted
Date: 8/27/2012

Project: WSDOT GEOWALL™
Title: GEOWALL CORNER DETAILS
Project No:
Sheet No. 9 of 12

The information on this drawing is for conceptual design and should not be used without the signature of a professional engineer. Details should be specific to the project and project site requirements.

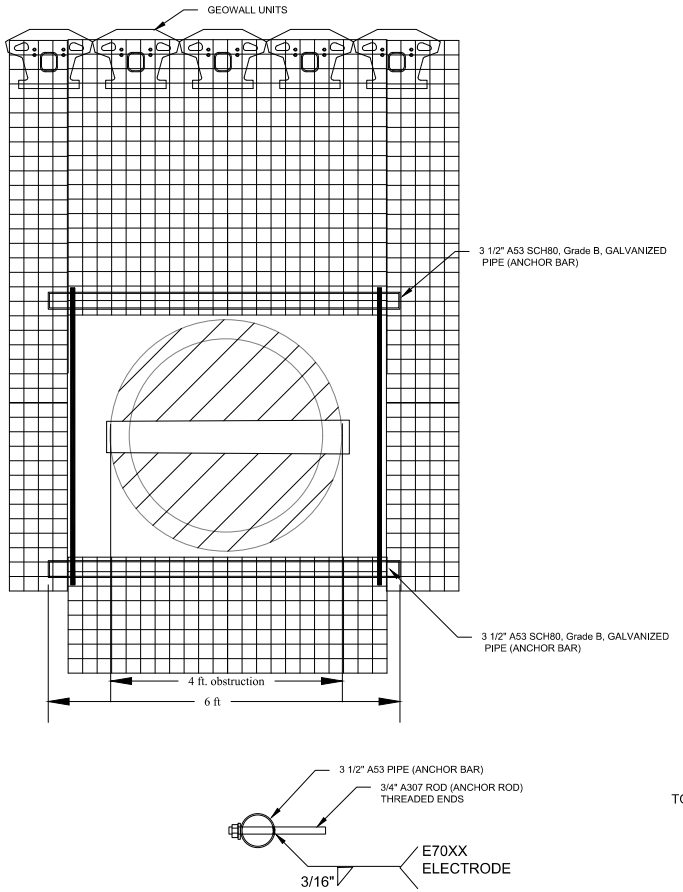

DROP STRUCTURE IN REINFORCED ZONE

NOTE: ALL PIPES, RODS, NUTS, BOLTS AND WASHERS SHALL BE HOT DIPPED GALVANIZED IN ACCORDANCE WITH AASHTO M111 OR M232

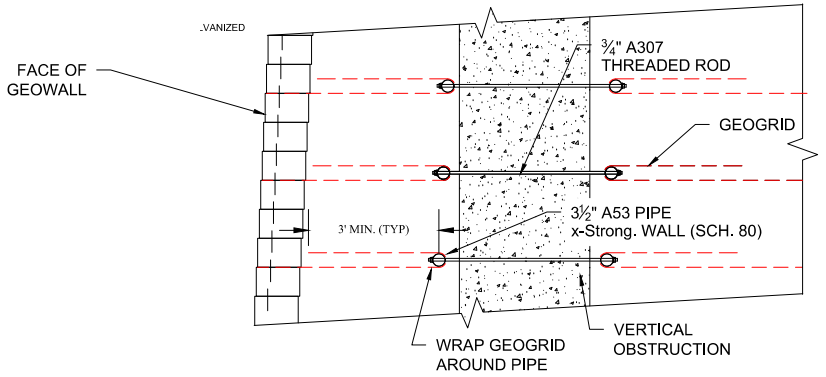

NOTE: MAX OPENING WIDTH = 6'
MAX OPENING HEIGHT = 6'

VERTICAL WALL OBSTRUCTION
NTS

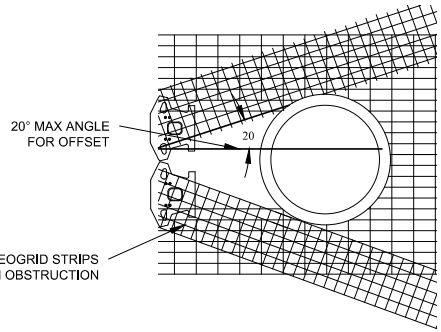

GEOGRID PLACEMENT AROUND OBSTRUCTION
NTS

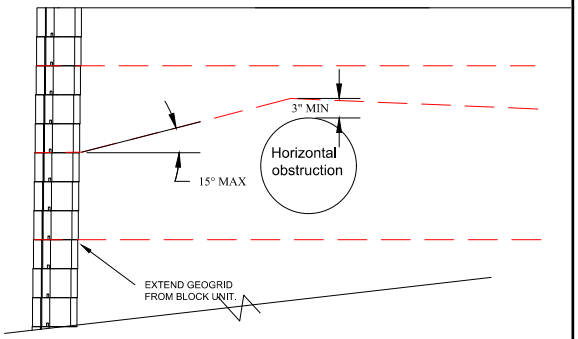

HORIZONTAL WALL OBSTRUCTION
NTS

These details apply to the GEOWALL PRO, GEOWALL MAX AND GEOWALL MAX II Units.

BASALITE® CONCRETE PRODUCTS, LLC

www.basalite.com

No.	Date	Revision	By

Designed By: PAR
Scale: As Noted
Date: 8/27/2012

Project: WSDOT GEOWALL™
Project No:
Title: GEOWALL OBSTRUCTION DETAILS
Sheet No. 10 of 12

The information on this drawing is for conceptual design and should not be used without the signature of a professional engineer. Details should be specific to the project and project site requirements.

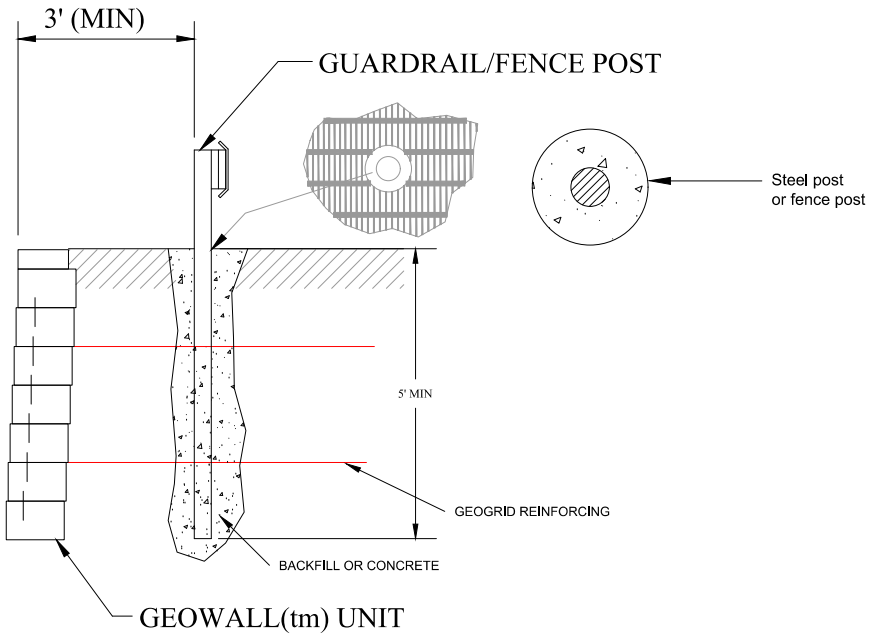

Typical Post Detail

SCALE: N.T.S.

BASALITE® CONCRETE PRODUCTS, LLC

www.basalite.com

No.	Date	Revision	By

Designed By: PAR
Scale: As Noted
Date: 8/27/2012

Project: WSDOT GEOWALL™
Title: GEOWALL POST DETAIL
Project No:
Sheet No. 11 of 12

The information on this drawing is for conceptual design and should not be used without the signature of a professional engineer. Details should be specific to the project and project site requirements.

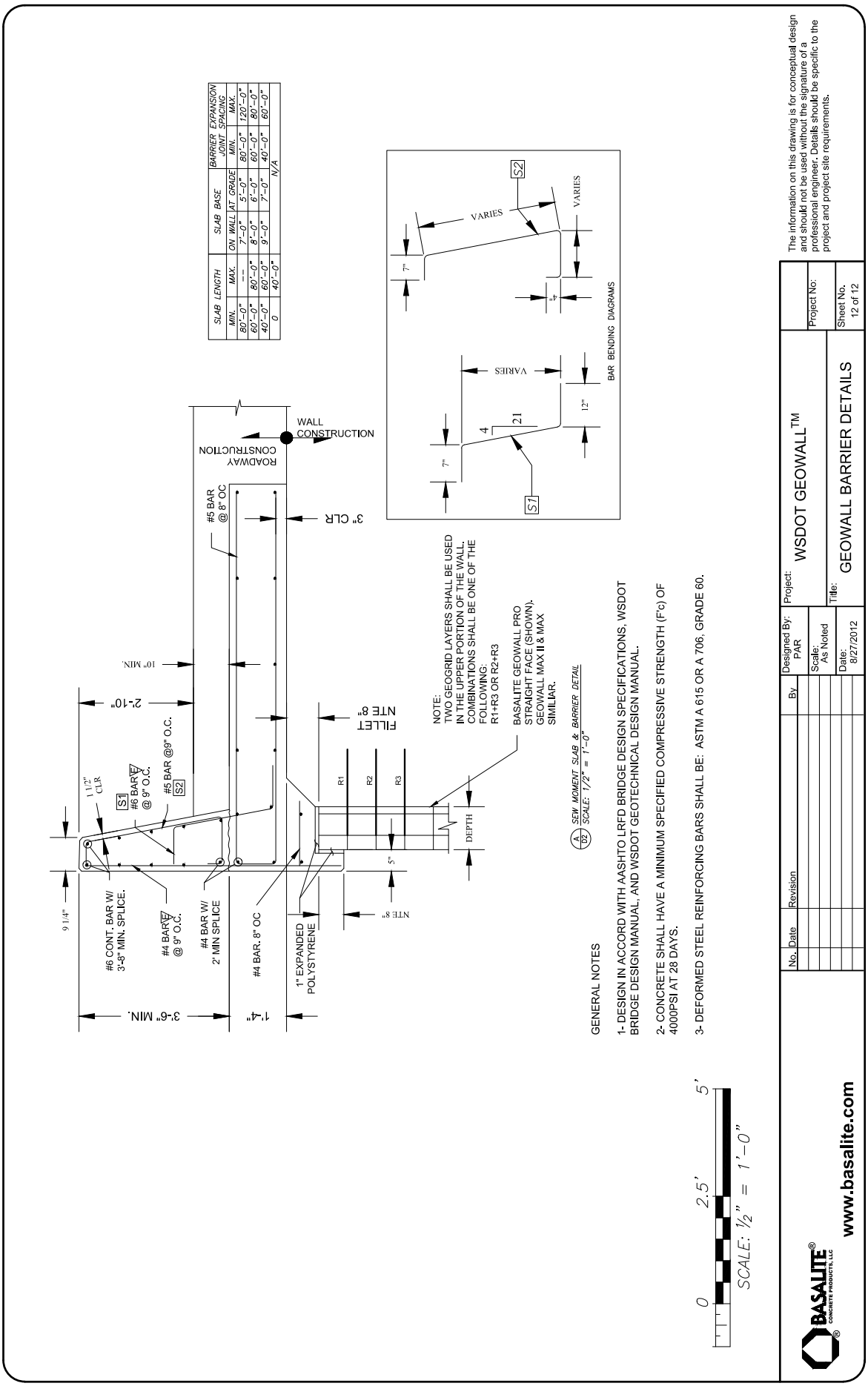
SLAB LENGTH
MIN. MAX.
80'-0" --
60'-0" 80'-0"
40'-0" 60'-0"
0 40'-0"
SLAB BASE
ON WALL AT GRADE
7'-0" 5'-0"
8'-0" 6'-0"
9'-0" 7'-0"
N/A
BARRIER EXPANSION JOINT SPACING
MIN. MAX.
80'-0" 120'-0"
60'-0" 80'-0"
40'-0" 60'-0"
BAR BENDING DIAGRAMS
VARIES
7"
S2
S1
4
21
12"
WALL CONSTRUCTION
ROADWAY CONSTRUCTION
#5 BAR @ 8" OC
3" CLR
10" MIN.
2'-10"
1 1/2" CLR
#6 BAR @ 9" O.C.
#5 BAR @9" O.C.
FILLET NTE 8"
NOTE: TWO GEOGRID LAYERS SHALL BE USED IN THE UPPER PORTION OF THE WALL. COMBINATIONS SHALL BE ONE OF THE FOLLOWING: R1+R3 OR R2+R3
BASALITE GEOWALL PRO STRAIGHT FACE (SHOWN). GEOWALL MAX II & MAX SIMILIAR.
R1
R2
R3
DEPTH
5"
NTE 8"
9 1/4"
#6 CONT. BAR W/ 3'-8" MIN. SPLICE.
#4 BAR @ 9" O.C.
#4 BAR W/ 2' MIN SPLICE
#4 BAR. 8" OC
1" EXPANDED POLYSTYRENE
3'-6" MIN.
1'-4"
A/02 SEW MOMENT SLAB & BARRIER DETAIL
SCALE: 1/2" = 1'-0"
GENERAL NOTES
1- DESIGN IN ACCORD WITH AASHTO LRFD BRIDGE DESIGN SPECIFICATIONS, WSDOT BRIDGE DESIGN MANUAL, AND WSDOT GEOTECHNICAL DESIGN MANUAL.
2- CONCRETE SHALL HAVE A MINIMUM SPECIFIED COMPRESSIVE STRENGTH (F'c) OF 4000PSI AT 28 DAYS.
3- DEFORMED STEEL REINFORCING BARS SHALL BE: ASTM A 615 OR A 706, GRADE 60.
0 2.5' 5'
SCALE: 1/2" = 1'-0"
BASALITE CONCRETE PRODUCTS, LLC
www.basalite.com
No. Date Revision By
Designed By: PAR
Scale: As Noted
Date: 8/27/2012
Project: WSDOT GEOWALL™
Title: GEOWALL BARRIER DETAILS
Project No:
Sheet No. 12 of 12
The information on this drawing is for conceptual design and should not be used without the signature of a professional engineer. Details should be specific to the project and project site requirements.

Chapter 16 Geosynthetic Design

16.1 Overview

This chapter addresses the design of geosynthetics in the following applications:

- Underground drainage, including prefabricated drainage strips
- Soil separation
- Soil stabilization
- Permanent erosion control
- Silt fences
- Base reinforcement for embankments over soft ground
- Geomembranes

Investigation and design of geosynthetic walls and reinforced slopes is addressed in Chapter 15.

16.2 Development of Design Parameters for Geosynthetic Application

For underground drainage design, information regarding the gradation and density of the soil in the vicinity of the geosynthetic drain, as well as details regarding the likely sources of water to the drain, including groundwater, is needed. For shallow systems, hand holes will be adequate for this assessment. For drainage systems behind retaining walls, test holes may be needed. In general, the geotechnical site investigation conducted for the structure itself will be adequate for the drainage design.

In general for soil stabilization and separation, hand holes coupled with Falling Weight Deflectometer (FWD) test results will be adequate for design purposes. For extremely soft subgrade soils, subgrade shear strength data may be needed to allow a subgrade reinforcement design to be conducted.

For permanent erosion control, the gradation characteristics of the soil below the geotextile layer, and measurement of the groundwater, are important to the geosynthetic design. Test holes or test pits will be needed at key locations where permanent erosion control geotextiles are planned to be used.

Investigation for silt fences can generally be done by inspection, as silt fence design is, in general, standardized.

Investigation for base reinforcement of embankments over soft ground is addressed in Chapter 9.

For geomembrane design, groundwater information and soil gradation information is usually needed. If the geomembrane is to be placed on a slope, the geotechnical data needed to investigate slope stability will need to be obtained (see Chapters 7, 9, and 10).

16.3 Design Requirements

For Standard Specification geosynthetic design (underground drainage, separation, soil stabilization, permanent erosion control, silt fences, and prefabricated drainage strips), the *Design Manual* M 22-01 Chapter 630, shall be used for geosynthetic design. For situations where a site specific geosynthetic design is required, FHWA manual No. FHWA HI-95-038 "Geosynthetic Design and Construction Guidelines – Participant Notebook" (Holtz, et al., 1995) shall be used. For base reinforcement of embankments over soft ground, the FHWA manual identified above shall be used for design in addition to the requirements in Chapter 9. For geomembrane design, the above referenced FHWA manual should be used.

16.4 References

Holtz, R. D., Christopher, B. R., and Berg, R. R., 1995, Geosynthetic Design and Construction Guidelines, Federal Highway Administration, FHWA HI-95-038.

Design Manual M 22-01

Chapter 17 Foundation Design for Signals, Signs, Noise Barriers, Culverts, and Buildings

17.1 General

17.1.1 Overview

This chapter covers the geotechnical design of lightly loaded structures which include: noise barriers, sign bridges, cantilevered signs and signals, strain pole standards, luminaires, culverts not supported on foundation elements, and small buildings. Small buildings typically include single story structures such as structures in park and ride lots, rest areas, or WSDOT maintenance facilities. Standard Plan designs found in the *Standard Plans For Road, Bridge and Municipal Construction* M 21-01 have been developed for all of these structures except for small buildings and culverts. Both shallow (e.g. spread footings) and moderately deep foundations (trenches and shafts) have been designed to support these lightly loaded structures in a variety of soil and site conditions. The structural design of these facilities is addressed in the *Bridge Design Manual* and *Design Manual* M 22-01.

17.1.2 Site Reconnaissance

General procedures for site reconnaissance are presented in Chapter 2. Prior to the site reconnaissance, the location of the structures should be staked in the field, or an accurate and up-to-date set of site plans identifying the location of these structures should be available. An office review of all existing data pertinent to the site and the proposed foundations (see Chapter 2) should also be conducted prior to the site reconnaissance.

During the site reconnaissance, observations of the condition of existing slopes (natural and cut) in the immediate vicinity of the structures should be inspected for performance. It is especially important to establish the presence of high ground water and any areas of soft soil. Many of these structures have very shallow foundations and the investigation may only consist of general site reconnaissance with minimal subsurface investigation. The geotechnical designer should have access to detailed plan views showing existing site features, utilities, proposed construction and right-of-way limits. With this information, the geotechnical designer can review structure locations, making sure that survey information agrees reasonably well with observed topography. The geotechnical designer should look for indications of soft soil and unstable ground. Observation of existing slopes should include vegetation, in particular the types of vegetation that may indicate wet soil. Equisetum (horsetail), cattails, blackberry and alder can be used to identity wet or unstable soils. Potential geotechnical hazards such as landslides that could affect the structures should be identified. The identification and extent/condition (i.e., thickness) of existing man-made fills should be noted, because many of these structures may be located in engineered fills. Surface and subsurface conditions that could affect constructability of the foundations, such as the presence of shallow bedrock, or cobbles and boulders, should be identified.

17.1.3 Field Investigation

If the available geotechnical data and information gathered from the site review is not adequate to make a determination of subsurface conditions as required herein, then new subsurface data shall be obtained. Explorations consisting of geotechnical borings, test pits and hand holes or a combination thereof shall be performed to meet the investigation requirements provided herein. As a minimum, the subsurface exploration and laboratory test program should be developed to obtain information to analyze foundation stability, settlement, and constructability with respect to:

- Geological formation(s)
- Location and thickness of soil and rock units
- Engineering properties of soil and rock units such as unit weight, shear strength and compressibility
- Groundwater conditions (seasonal variations)
- Ground surface topography
- Local considerations, (e.g., liquefiable soils, expansive or dispersive soil deposits, underground voids from solution weathering or mining activity, or slope instability potential)

Standard foundations for sign bridges, cantilever signs, cantilever signals and strain pole standards are based on allowable lateral bearing pressure and angle of internal friction of the foundation soils. The determination of these values can be estimated by Standard Penetration Test (SPT). Portable Penetrometer Tests (PPT) may be used to obtain the soil data provided the blow count data is properly converted to an equivalent standard penetrometer "N" value. The designer should refer to Chapter 3 for details regarding the proper conversion factors of PPT to SPT. Every structure foundation location does not need to be drilled. Specific field investigation requirements for the structures addressed in this chapter are summarized in Table 17-1.

<table>
<tr><th>Structure Type</th><th>Field Investigation Requirements</th></tr>
<tr><td>Cantilever signals, strain poles, cantilever signs, sign bridges, and luminaires</td><td>Only a site review is required if the new structures are founded in new or existing embankments known to be constructed of gravel or select borrow and compacted in accordance with Method B or C of the WSDOT Standard Specifications. Otherwise, subsurface conditions should be verified using SPT, or PPT tests and hand augers for shallower foundations) should be performed. For foundations within approximately 75 feet of each other or less, such as at a small to moderate sized intersection, one exploration point for the foundation group is adequate if conditions are relatively uniform. For more widely spaced foundation locations, or for more variable site conditions, one boring near each foundation should be obtained. The depth of the exploration point should be equal to the maximum expected depth of the foundation plus 2 to 5 feet.</td></tr>
<tr><td>Noise barriers</td><td>For noise barriers less than 100 feet in length, the exploration should occur approximately midpoint along the alignment and should be completed on the alignment of the noise barrier face. For noise barriers more than 100 feet in length, exploration points should be spaced every 200 to 400 feet, depending on the uniformity of subsurface conditions. Locate at least one exploration point near the most critical location for stability. Exploration points should be completed as close to the alignment of the noise barrier face as possible. For noise barriers placed on slopes, an additional boring off the wall alignment to investigate overall stability of the wall-slope combination should be obtained.</td></tr>
<tr><td>Building foundations</td><td>The following minimum guidelines for frequency of explorations should be used. Borings should be located to allow the site subsurface stratigraphy to be adequately defined beneath the structure. Additional explorations may be required depending on the variability in site conditions, building geometry and expected loading conditions.
<table>
<tr><th>Building surface area (ft^2)</th><th>Explorationpoints (minimum)</th></tr>
<tr><td><200</td><td>1</td></tr>
<tr><td>200 - 1000</td><td>2</td></tr>
<tr><td>1000 – 3,000</td><td>3</td></tr>
<tr><td>>3,000</td><td>3 - 4</td></tr>
</table>
The depth of the borings will vary depending on the expected loads being applied to the foundation and/or site soil conditions. The borings should be extended to a depth below the bottom elevation of the building foundation a minimum of 2.5 times the width of the spread footing foundation or 1.5 times the length of a deep foundation (i.e., piles or shafts). Exploration depth should be great enough to fully penetrate soft highly compressible soils (e.g., peat, organic silt, soft fine grained soils) into competent material suitable bearing capacity (e.g., stiff to hard cohesive soil, compact dense cohesionless soil or bedrock).</td></tr>
<tr><td>Culverts (without foundation elements)</td><td>If no new fill is being placed, the culvert diameter is 3 feet or less, soft soil is known to not be present immediately below the culvert, and the culvert is installed by excavating through the fill, only a site and office review conducted as described in Chapter 2 is required, plus hand holes to obtain samples for pH and resistivity sampling for corrosion assessment for the culvert. If new fill is being placed, the borings obtained for the design of the fill itself may suffice (see Chapter 9), provided the stratigraphy below the length of the culvert can be defined. Otherwise, a minimum of two borings should be obtained, one near the one-third or one-quarter points toward each end of the culvert. For culverts greater than 300 feet in length, an additional boring near the culvert midpoint should be obtained. Borings should be located to investigate both the subsurface conditions below the culvert, and the characteristics of the fill beside and above the culvert if some existing fill is present at the culvert site. If the culvert is to be jacked through existing fill, borings in the fill and at the jacking and receiving pit locations should be obtained, to a depth of 3 to 5 feet below the culvert for the boring(s) in the fill, and to the anticipated depth of the shoring/ reaction frame foundations in the jacking and receiving pits.

Hand holes and portable penetrometer measurements may be used for culverts with a diameter of 3 feet or less, if the depth of exploration required herein can be obtained. Otherwise, SPT and/ or CPT borings must be obtained.</td></tr>
</table>

In addition to the exploration requirements in Table 17-1, groundwater measurements conducted in accordance with Chapter 2 should be obtained if groundwater is anticipated within the minimum required depths of the borings as described herein.

Field Investigation Requirements for Cantilever Signals, Strain Poles, Cantilever Signs, Sign Bridges, Luminaires, Noise Barriers, and Buildings

Table 17-1

17.2 Foundation Design Requirements for Cantilever Signals, Strain Poles, Cantilever Signs, Sign Bridges, and Luminaires - General

The standard foundation designs provided in the Standard Plans for cantilever signals, strain poles, cantilever signs, sign bridges, and luminaires should be used if the applicable soil and slope conditions as described herein for each of these structures are present. If soil or rock conditions not suitable for standard foundations are present, if conditions are marginal, or if nonstandard loadings are applied, a detailed foundation analysis should be conducted. Design for cantilever signals, strain poles, cantilever signs, sign bridges, and luminaires shall be performed in accordance with the AASHTO Standard Specifications for Structural Supports for Highway Signs, Luminaires, and Traffic Signals (AASHTO, 2001).

17.2.1 Design by Correlation for Cantilever Signals, Strain Poles, Cantilever Signs, Sign Bridges, and Luminaires

WSDOT standard foundation designs for cantilever signals, strain poles, cantilever signs, sign bridges, and luminaires are based on allowable lateral bearing pressures and soil friction angles developed from correlation (Patterson, 1962) and many years of WSDOT experience for the design of these types of small foundations. The original correlation was based on the measured resistance to pull out a 1.5 inch diameter auger through the foundation soil. The correlation reported by Patterson (1962) ranged from a 200 lbs pullout force in "very soft soil" that was equated to an allowable lateral bearing of 1,000 psf, to a 750 to 1,000 lbs pullout force in "average soil" equated to an allowable lateral bearing of 2,500 psf, and to a pullout force of 2,000 to 2,500 lbs in "very hard soil" equated to an allowable lateral bearing of 4,500 psf. For WSDOT use, this correlation was conservatively related to SPT N values (uncorrected for overburden pressure) using approximate correlations between soil shear strength and SPT N values such as provided in AASHTO (1988). The allowable lateral bearing pressures that resulted from this correlation is presented in Table 17-2. This correlation is based on uncorrected N values (not corrected for overburden pressure).

A friction angle for the soil is also needed for the foundation design for these structures, typically to evaluate torsional stability. See Chapter 5 for the determination of soil friction angles, either from correlation to SPT N values, or from laboratory testing.

Table 17-2 should be used to check if standard foundation designs are applicable for the specific site. The values in Table 17-2 may also be used for special site specific foundation design to adjust depths or dimensions of standard foundations (except noise barriers) to address soil conditions that are marginal or poorer than the conditions assumed by the standard foundation design, or to address nonstandard loadings. In such cases, the values from Table 17-2 should be used as the allowable soil pressure S_1 in Article 13.10 of the AASHTO Standard Specifications for Structural Supports for Highway Signs, Luminaires, and Traffic Signals (AASHTO, 2001).

Soil Consistency as Identified in Patterson (1962)	Standard Penetration Test Resistance, N (blows/ft)	Allowable Lateral Bearing Pressure (psf)
Very Soft Soil	2	750
	3	800
	4	900
	5	1000
	6	1100
	7	1200
Poor Soil	8	1300
	9	1400
	10	1500
	11	1700
	12	1900
Average Soil	13	2100
	14	2300
	15	2500
	16	2700
	17	2900
Good Soil	18	3100
	19	3300
	20	3500
Very Hard Soil	25	4200
	30	>4500
	35	>4500

Design Parameter Correlations for the Design of Signal, Signs, Sign Bridge, and Luminaire Foundations
Table 17-2

Some additional requirements regarding characterization of marginal soil conditions are as follows:

- Consider the soil throughout the entire depth of the proposed foundation. Where the foundation soil is stratified, a weighted average N value should be used to design the foundation. An exception would be where soft soils are encountered at the ground surface, in which case the use of a weighted average is not appropriate.
- For foundations installed in embankments constructed from select or gravel borrow compacted using Method B or C in the WSDOT Standard Specifications, it can generally be assumed that standard foundations can be used, as such embankments will generally have "N" values of 25 or more, which are more than adequate for standard foundations. A standard foundation may also be used where 75% or more of the foundation is to be placed in new fill, provided that the foundation soil below the fill has a SPT of 8 or more. For Common Borrow compacted using Method B or C in the WSDOT Standard Specifications, standard foundations designed allowable lateral bearing pressures of 2,000 psf or less may be used.

- In general, vertical loads for sign, signal, and luminaire structure foundations are very low (i.e., 2 ksf or less) and usually do not control design. However, if it is discovered that very soft silts, clays, or peat (say, N = 4 or less) is present within the bottom 1 to 2 feet or more of the foundation, consideration should also be given to a special foundation design in this case to avoid direct bearing on these very soft soils.

The allowable lateral soil bearing values in Table 17-2 apply only to relatively flat conditions. If sloping ground is present, some special considerations in determining the foundation depth are needed. Always evaluate whether or not the local geometry will affect the foundation design. For all foundations placed in a slope or where the centerline of the foundation is less than 1B for the shoulder of the slope (B = width or diameter of the Standard Foundation), the Standard Plan foundation depths should be increased as follows, and as illustrated in Figure 17-1:

- For slopes 3H:1V or flatter, no additional depth is required.
- For 2H:1V or flatter, add 0.5B to the depth.
- For 1.5H:1V slopes, add 1.0B to the depth.

Interpolation between the values is acceptable. These types of foundations should not be placed on slopes steeper than 1.5H:1V. If the foundation is located on a slope that is part of a drainage ditch, the top of the standard foundation can simply be located at or below the bottom of the drainage ditch.

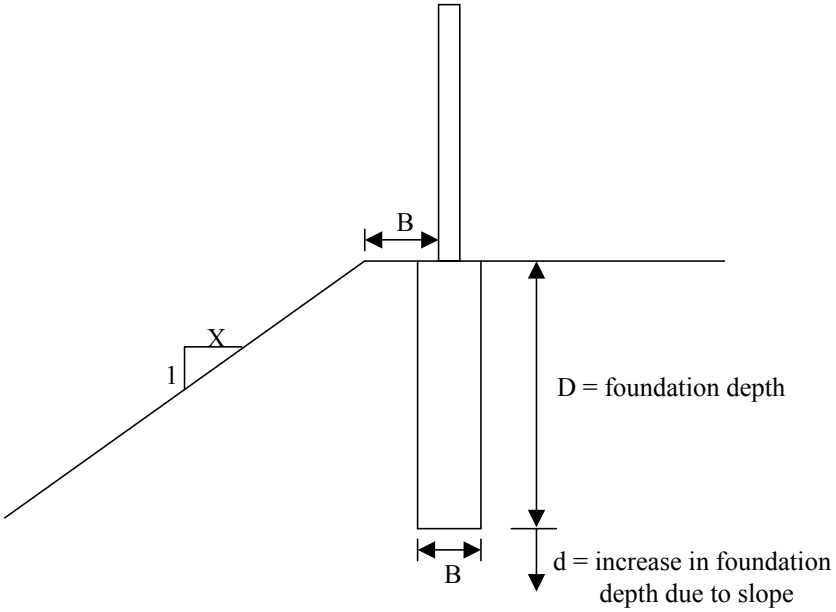

Foundation Design Detail for Sloping Ground
Figure 17-1

Note that these sloping ground recommendations do not apply to luminaire foundations.

When a nonstandard foundation design using Table 17-2 is required, the geotechnical designer must develop a table identifying the soil units, soil unit boundary elevations, allowable lateral bearing pressure, and soil friction angle for each soil unit. The structural designer will use these data to prepare the nonstandard foundation design.

17.2.2 Special Design for Cantilever Signals, Strain Poles, Cantilever Signs, Sign Bridges, and Luminaires

For foundations in rock, a special design is always required, and Table 17-2 is not applicable. Fracturing and jointing in the rock, and its effect on the foundation resistance, must be evaluated. In general, a drilled shaft or anchored footing foundation will be required. Foundation designs based on Table 17-2 are also not applicable if the foundation soil consists of very soft clays, silts, organic silts, or peat. In such cases, a footing designed to "float" above the very soft compressible soils, over-excavation and replacement with higher quality material, or very deep foundations are typically required.

For shaft type foundations in soil, the Broms Method as specified in the AASHTO Standard Specifications for Structural Supports for Highway Signs, Luminaires, and Traffic Signals (AASHTO, 2001) or the procedures specified in Chapter 8 for lateral load analysis of deep foundations (e.g., P-y analysis) should be used for conditions where Table 17-2 is not applicable, or as an alternative to Table 17-2 based design. For shafts in rock, nominal lateral resistance should be estimated based on the procedures provided in Chapter 8. This means that for special lateral load design of shaft foundations, the geotechnical designer will need to provide P-y curve data to the structural designer to complete the soil-structure interaction analysis. For spread footing design, the design methods provided in Chapter 8 to estimate nominal bearing resistance and settlement should be used, but instead of the referenced load groups and resistance factors, the AASHTO Standard Specifications for Highway Bridges (2002) combined with a minimum bearing capacity safety factor of 2.3 for Load Factor Design (LFD), or 3.0 for allowable stress or service load design (ASD) should be used for static conditions, and a safety factor of 1.1 should be used for seismic conditions, if seismic conditions are applicable. Note that in general, the foundations for the types of structures addressed in this chapter are not mitigated for liquefaction (see Chapter 6). For anchored footing foundations over bedrock, anchor depth, spacing, and nominal resistance shall be assessed considering the degree of fracturing and jointing in the rock (see Chapters 5, 8, and 12 for design requirements).

17.2.3 Cantilever Signals and Strain Pole Standards

17.2.3.1 Overview

There are eight types of cantilever signal and strain poles standards that are covered in Section J-7 of the WSDOT Standard Plans. Type PPB (pedestrian push bottom pole), PS (pedestrian head standard), Type I/RM (vertical head and ramp meter), Type FB (flashing beacon standard) and Type IV (strain pole standard) are structures that generally consist of a single vertical metal pole member. Type II (mast arm standard), Type III (lighting and mast arm standard) and Type V (lighting and strain pole standard) have a vertical metal pole member with a horizontal mast arm. Lights and/or signals will be suspended from the mast arm. The standard signal foundations designs assume that the foundation soil is capable of withstanding the design lateral soil bearing pressure created by wind and dead loads. The details on the foundation designs can be found in Section J-7 of the *Standard Plans*, in the Signing Foundations Chapter 1020 and Signal Foundations Chapter 1330 of the *Design Manual* M 22-01.

17.2.3.2 Standard Foundation Designs

The standard foundations for these structures consist of square or round shafts that vary in diameter from 1.5 feet to 3.0 feet for square and 2.0 feet to 4.0 feet for round shaft foundations. The standard designs assume a concrete to soil contact. For structure types PPB, PS and I/RM, the foundation depths are quite shallow and vary between 1.5 feet and 3.0 feet in depth. Foundation depths vary from 6 feet to 15 feet for signal structure Types II, III, IV and V. Standard foundations for signal structures Types PPB, PS and I are designed for 1500 psf ($N \geq 10$ bpf) average allowable lateral bearing pressure. Standard foundations for signal structures Types II, III, IV and V have been designed for 1000 psf ($N \geq 5$ bpf), 1500 psf ($N \geq 10$ bpf), and 2500 psf ($N \geq 15$ bpf) average allowable lateral bearing pressure. If the foundation is placed in new compacted fill – standard foundations may be used as specified in Section 17.2.1.

For round shafts, the standard foundation designs assume for torsional stability that the soil to foundation contact friction angle is 30°, which is typical for concrete cast against soil for moderate strength soils.

17.2.3.3 Construction Considerations

Structures that require short round or square foundations (i.e. < than 9 feet) could be easily formed in an open excavation. The backfill placed around the foundation in the excavation must be compacted in accordance with the WSDOT Standard Specifications M41-10, Section 2-09.3(1)E and using high quality soil backfill. Foundation construction shall be in accordance with the WSDOT Standard Specifications M41-10, Sections 8-20.3(2) and 8-20.3(4). Following the removal of the concrete forms (the forms can be left in place if corrugated metal pipe is used), compacted backfill shall be placed around the shaft to provide containment. If the backfill cannot be properly compacted, then controlled density fill could be used instead.

Deep shaft foundations greater than 9 feet may require the use of temporary casing, slurries or both. Generally in most cases, the temporary casing can be removed. Special foundations designs may be required if the geotechnical designer determines that permanent casing is necessary. In this situation, the structural designer must be informed of this condition. These structures are under lateral and rotational loads. The shear capacity of the foundation under a rotational force is reduced if steel casing remains in the ground. It is important to note here that if the foundation design assumes that the soil around the shaft, assuming the contractor makes an open excavation and then backfills the excavation cavity around the formed foundation, is properly compacted, the degree of compaction is somehow verified in the field. The geotechnical designer needs to make sure that the construction specifications are clear in this regard, and that the project inspectors know what needs to be done to enforce the specifications. If the degree of compaction cannot be verified in the field due to the depth of the open excavation and safety regulations, this needs to be taken into consideration in the selection of soil design parameters. The specifications also need to be clear regarding the removal of temporary forms (e.g., sonotubes) for the foundations. If for some reason they cannot be removed due to the depth of the hole or other reasons, sonotubes should not be used. Instead, corrugated metal pipe should be used so that torsional resistance of the foundation is maintained.

17.2.4 Cantilever and Sign Bridges

17.2.4.1 Overview

Sign bridge foundation details are shown in the WSDOT Standard Plan G-2a. There are three foundations types and they are identified as Type 1, 2 and 3. Type 1 sign bridge foundations consist of a single 3 feet diameter drilled shaft with a shaft length that can vary between 11.5 and 16.5 feet. The shaft length is a function of the sign bridge span length which can vary less than 60 feet to a maximum of 150 feet. Type 2 and 3 foundations consist of massive concrete trench foundations that are 3 feet × 10 feet in plan area with a embedment that can vary between 5.5 feet to 11.5 feet depending on span length. All designs assume a concrete to soil contact.

There are three cantilever sign foundation types in the WSDOT Standard Plans. The structural details are shown in Standard Plan G-3a. These foundations are similar to the sign bridge foundations. Type 1 cantilever sign foundations consist of two 10 feet long drilled shafts. The Type 2 and 3 foundations are a massive concrete trench foundation that is 3 feet × 10 feet in plan area with an embedment that can vary between 8 feet and 12.5 feet. Embedment depth of the foundation is controlled by the total square feet of exposed sign area. All designs assume a concrete to soil contact.

17.2.4.2 Standard Foundation Designs

Standard foundation for cantilevered and sign bridges Types 1 and 2 have been prepared assuming the site soils meet a minimum 2,500 psf allowable lateral bearing pressure. Using the Table 17-2, a soil with a penetration resistance $N \geq 15$ would provide adequate support for these structures. A Type 3 foundation was designed for slightly poorer soils using a lateral bearing pressure of 1,500 psf for structural design. Using Table 17-2, a soil with a penetration resistance of ≥10 bpf would provide adequate lateral resistance for a Type 3 foundation.

17.2.4.3 Construction Considerations

The construction of the trench footings may be performed as a cast-in-place foundation that is poured directly against the soils, or they could be constructed in a large open excavation using wide trench boxes and concrete forms. If a standard foundation design is to be used, but is installed in an open excavation, the backfill placed around the foundation in the excavation must be compacted in accordance with Method C of the WSDOT Standard Specifications and using high quality soil backfill.

The geotechnical designer must evaluate the stability of open excavations. Obviously, high groundwater could affect the stability of the side slopes of the excavation. Casing for drilled shafts or shoring boxes for the trench footing would be required under these conditions. All of these foundations have been designed assuming a concrete to soil contact. Generally in most cases, the temporary casing for drilled shafts can be removed. Special foundations designs may be required if the geotechnical designer determines that permanent casing is necessary. In this situation, the structural engineer must be informed of this condition. These structures are under lateral and rotational loads. The shear capacity of the foundation under a rotational force is reduced if steel casing remains in the ground.

It is important to note here that if the foundation design assumes that the soil around the shaft, assuming the contractor makes an open excavation and then backfills the excavation cavity around the formed foundation, is properly compacted, the degree of compaction is somehow verified in the field. The geotechnical designer needs to make sure that the construction specifications are clear in this regard, and that the project inspectors know what needs to be done to enforce the specifications. If the degree of compaction cannot be verified in the field due to the depth of the open excavation and safety regulations, this needs to be taken into consideration in the selection of soil design parameters. The specifications also need to be clear regarding the removal of temporary forms (e.g., sonotubes) for the foundations. If for some reason they cannot be removed due to the depth of the hole or other reasons, sonotubes should not be used. Instead, corrugated metal pipe should be used so that torsional resistance of the foundation is maintained.

17.2.5 Luminaires (Light Standards)

17.2.5.1 Overview

Standard luminaire (light standard) foundations consist of 3 feet diameter round shafts. The foundation details are shown in WSDOT Standard Plan J-1b. The standard foundation depth is 8 feet.

17.2.5.2 Standard Foundation Design

Standard foundations for luminaires (light standards) have been prepared assuming the site soils meet a minimum 1,500 psf allowable lateral bearing pressure. Using the Table 17-2, a soil with a penetration resistance N ≥ 10 would provide adequate support for these structures. The standard foundation design is applicable for foundations on slopes of 2H:1V or flatter as shown in Figure 17-2.

The standard foundation designs assume for torsional stability that the soil to foundation contact friction angle is 30°, which is typical for concrete cast against soil for moderate strength soils.

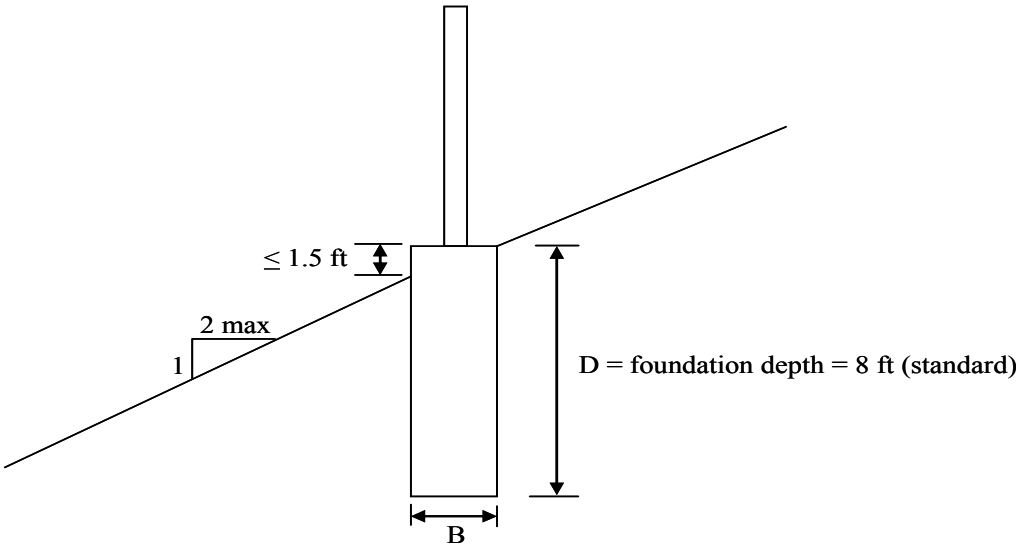

Luminaire Foundation Design Detail for Sloping Ground
Figure 17-2

17.2.5.3 Construction Considerations

Luminaire foundations could be easily formed in an open excavation. The backfill placed around the foundation in the excavation must be compacted in accordance with the WSDOT Standard Specifications M41-10, Section 2-09.3(1)E and using high quality soil backfill. Foundation construction shall be in accordance with the WSDOT *Standard Specifications* M41-10, Sections 8-20.3(2) and 8-20.3(4). Following the removal of the concrete forms (the forms can be left in place if corrugated metal pipe is used), compacted backfill shall be placed around the shaft to provide containment. If the backfill cannot be properly compacted, then controlled density fill could be used instead.

Deep shaft foundations (i.e., special designs) greater than 9 feet may require the use of temporary casing, slurries or both. Generally, in most cases, the temporary casing can be removed. Special foundations designs may be required if the geotechnical designer determines that permanent casing is necessary. In this situation, the structural designer must be informed of this condition. These structures are under lateral and rotational loads. The shear capacity of the foundation under a rotational force is reduced if steel casing remains in the ground.

It is important to note here that if the foundation design assumes that the soil around the shaft, assuming the contractor makes an open excavation and then backfills the excavation cavity around the formed foundation, is properly compacted, the degree of compaction is somehow verified in the field. The geotechnical designer needs to make sure that the construction specifications are clear in this regard, and that the project inspectors know what needs to be done to enforce the specifications. If the degree of compaction cannot be verified in the field due to the depth of the open excavation and safety regulations, this needs to be taken into consideration in the selection of soil design parameters. The specifications also need to be clear regarding the removal of temporary forms (e.g., sonotubes) for the foundations. If for some reason they cannot be removed due to the depth of the hole or other reasons, sonotubes should not be used. Instead, corrugated metal pipe should be used so that torsional resistance of the foundation is maintained.

17.3 Noise Barriers

17.3.1 Overview

There are 20 standard designs for noise barriers that are covered in WSDOT Standard Plans D-2a through D-2t. The Standard Plans contains detailed designs of seven cast-in-place concrete, seven pre-cast concrete, and five masonry block noise barriers.

Three foundation options are available for the cast-in-place and pre-cast concrete barriers. They include round shafts and spread footings. The spread footing foundation option has two designs. One design consists of an offset panel and a second design consists of a uniform panel where the panel wall bears in the middle of the footing. The following is a summary of the critical design elements of noise barrier walls:

- All noise barrier spread footing standard foundations have been designed assuming an allowable bearing pressure of 2 kips per square foot (ksf).
- The diameter and length of the standard shaft foundations can also vary with soil condition, exposed panel height and loading condition. The lengths vary from 4.75 feet to 13.25 feet, and shaft diameters vary between 1.0 to 2.5 feet.

17.3.2 Foundation Design Requirements for Noise Barriers

Foundation design for noise barrier shall be conducted in accordance with the most current AASHTO Guide Specifications for Structural Design of Sound Barriers, including interims (AASHTO 1989). Currently, design of noise barriers is based on Load Factor Design (LFD). Therefore, the load factors and safety factors specified in the AASHTO manual for sound barrier foundation design, except as specifically required in this chapter of the GDM, should be used.

In addition, the geotechnical designer shall perform a global stability analysis of the noise barrier when the barrier is located on or at the crest of a cut or fill slope. The design slope model must include a surcharge load equal to the footing bearing stress. The minimum slope stability factor of safety of the structure and slope shall be 1.3 or greater for static conditions and 1.1 for seismic conditions. Note that in general, the foundations for noise barriers are not mitigated for liquefaction (see Chapter 6).

All Standard Plan noise barrier structures have been designed to retain a minimal amount of soil that must be no more than 4 feet in height with a level backslope. The retained soil above the noise barrier foundation is assumed to have a friction angle of 34° and a wall interface friction of 0.67ϕ, resulting in a K_a of 0.26 for the retained soil, and a unit weight of 125 pcf. All standard and non-standard noise barrier foundation designs shall include the effects of any differential fill height between the front and back of the wall.

17.3.2.1 Spread Footings

For spread footing design, the design methods provided in Chapter 8 to estimate nominal bearing resistance and settlement should be used, but instead of the referenced load groups and resistance factors, the AASHTO Guide Specifications for Structural Design of Sound Barriers (1989) and AASHTO Standard Specifications for Highway Bridges (2002) combined with a minimum bearing capacity safety factor of 2.3 for Load Factor Design (LFD), or 3.0 for allowable stress or service load design (ASD) should be used for static conditions, and a safety factor of 1.1 should be used for seismic conditions, if seismic conditions are applicable. Note that in general, the foundations for noise barriers are not mitigated for liquefaction (see Chapter 6).

The noise barrier footing shall be designed to be stable for overturning and sliding. The methodology and safety factors provided in the AASHTO Standard Specifications for Highway Bridges (2002) applicable to gravity walls in general for overturning and sliding (FS of 2.0 and 1.5, respectively for static conditions, and 1.5 and 1.1 for seismic conditions), shall be used to assess noise barrier stability for these two limit states, using service loads.

The geotechnical designer will also be responsible to estimate foundation settlement using the appropriate settlement theories and methods as outlined in Chapter 8. The geotechnical designer will report the estimated total and differential settlement.

The soil properties (unit weight, friction and cohesion) shall be determined using the procedures described in Chapter 5.

Noise barrier footings shall be located relative to the final grade to have a minimum soil cover over the top of the footing of 2 feet.

For the Standard Plan noise barrier footing foundation, the geotechnical designer shall use the procedures described above to estimate the allowable bearing resistance for the foundation with consideration to the actual site and subsurface conditions for the wall, and to verify that the allowable bearing resistance is greater than the standard foundation design bearing stress of 2.0 ksf. Note that the standard noise barrier foundations have been designed to resist a PGA of 0.35g. This corresponds to a peak bedrock acceleration (PBA) from Figure 6-6 in Chapter 6 of 0.3g and an amplification factor of 1.18, corresponding to stiff soil.

For nonstandard noise barrier designs, use Mononabe-Okabe analysis in accordance with Chapter 15 to determine the seismic earth pressure if the noise barrier retains soil.

17.3.2.2 Shaft Foundations

In general, shaft supported noise barriers are treated as non-gravity cantilever walls for foundation design. Shaft foundations have been designed for Standard Plan noise barriers using two soil strength conditions. D1 and D2 trench and shaft foundations have been designed assuming a soil friction of 32 and 38 degrees respectively. The geotechnical designer is responsible to determine the in-situ soil strength parameters using the appropriate field correlations and/or laboratory tests as described in Chapter 5. The geotechnical designer provides recommendations as to which deep foundation(s) is appropriate for inclusion in the contract plans. If the soil strength parameters lie between 32 and 38 degrees, the foundation design based on 32 degrees shall be used if a Standard Plan wall is to be used. If multiple soil layers of varying strength have been identified within the depth of the trench or shaft foundation, soil strength averaging may be used to select the appropriate standard foundation type and depth. For example, if the average soil strength along the length of the shaft is 38° or more, the 38° standard foundation may be used.

The standard foundation designs used for the Standard Plan noise barriers are based on the following assumptions:

- Noise barrier standard foundation designs assume one of the following:
  - The wall is founded at the crest of a 2H:1V slope with a minimum of 3 feet of horizontal distance between the panel face and the slope break. The top 2 feet of passive resistance below the assumed ground surface at the noise barrier face is ignored in the development of the wall pressure diagram. For this case, groundwater must be at or below the bottom of the noise barrier foundation.
  - The wall is founded on a near horizontal slope (i.e., 6H:1V or flatter) with a minimum of 3 feet of horizontal distance between the panel face and the slope break. The top 2 feet of passive resistance below the assumed ground surface at the noise barrier face is ignored in the development of the wall pressure diagram. For this case, groundwater must be at or below 5 feet below the top of the noise barrier foundation.

- The standard shaft foundation designs have been designed for two different soil conditions, assuming the slope conditions in front of the wall as indicated above. One design assumes an average soil friction angle of 32 degrees (D1), resulting in a design K_p of 1.45 (2H:1V slope) or 5.7 (near horizontal slope) and K_a of 0.29, and the second design assumes an average soil friction angle of 38 degrees (D2), resulting in a design K_p of 2.2 (2H:1V slope) or 8.8 (near horizontal slope) and K_a of 0.22. All values of K_a and K_p reported above have been corrected to account for the angular deviation of the active or passive force from the horizontal (in these design cases, the correction factor, Cos (δ), where δ is the interface friction angle, is approximately equal to 0.9 to 0.93). The standard shaft foundation designs are based on standard earth pressure theory derived using logarithmic spiral method for K_p and the Coulomb method for K_a, assuming the interface friction between the foundation and the soil to be 0.67φ. A unit weight of 125 pcf was also assumed in the design. This unit weight assumes that the ground water level at the site is below the bottom of the noise barrier foundation. For the case where groundwater is considered, the effective unit weight of the soil is used below the water table (i.e., 62.6 pcf). For the shaft foundation design, it is assumed that the passive earth pressure is applied over a lateral distance along the wall of 3B, where B is the shaft diameter and 3.0 is the magnitude of the isolation factor for discrete shafts, or the center-to-center spacing of the shafts, whichever is less. A factor of safety of 1.5 should also applied to the passive resistance.
- The PGA for seismic design is assumed to be 0.35g. This corresponds to a peak bedrock acceleration (PBA) from Figure 6-6 in Chapter 6 of 0.3g and an amplification factor of 1.18, corresponding to stiff soil. K_{ae}, the seismic lateral earth pressure coefficient, was developed assuming that the acceleration A = 0.5PGA.
- All standard foundation designs assume a concrete to soil contact.
- Figures 17-3 and 17-4 illustrate the assumptions used for the standard trench or shaft foundation designs.

Special designs will be required if the site and soil conditions differ from those conditions assumed for design.

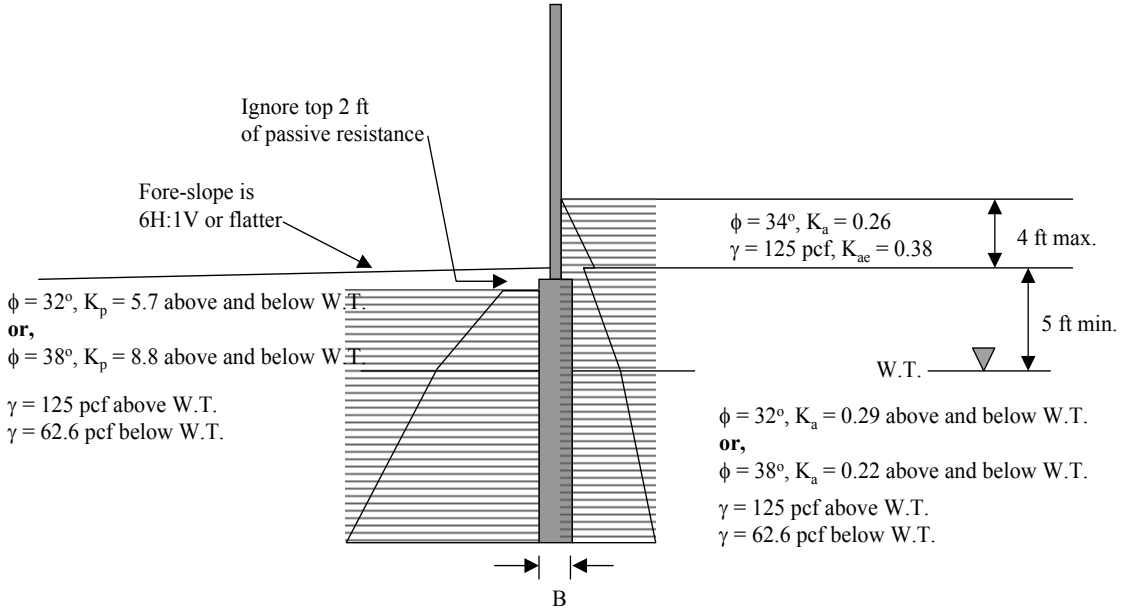

Use $3K_p$ applied to foundation width, B, for discrete foundation units (shafts), and $1.0K_p$ for trench foundation.
Use FS = 1.5 applied to K_p (K_p values shown above have not been factored).
K_a is applied over foundation width, B.

Standard Foundation Design Assumptions for Shaft or Trench Foundations, Assuming Near Level Ground Conditions and Ground Water Above Bottom of Foundation

Figure 17-3

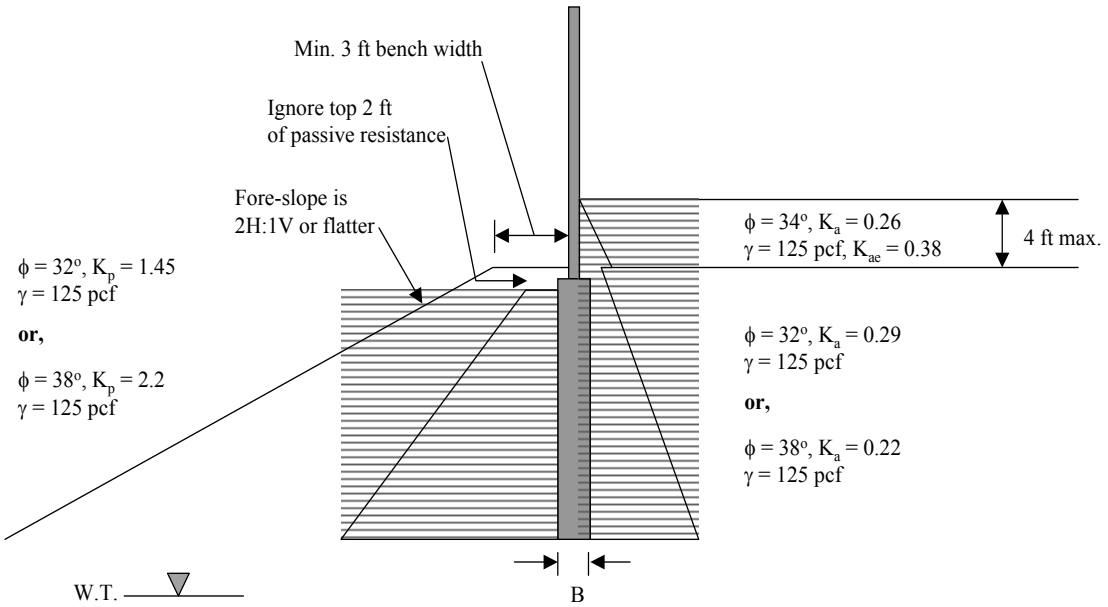

Use $3K_p$ applied to foundation width, B, for discrete foundation units (shafts), and $1.0K_p$ for trench foundation.
Use FS = 1.5 applied to K_p (K_p values shown above have not been factored).
K_a is applied over foundation width, B.

Standard Foundation Design Assumptions for Shaft or Trench Foundations, Assuming 2H:1V Slope in Front of Wall and Ground Water Below Foundation

Figure 17-4

17.3.2.3 Non-Standard Foundation Design

A non-standard foundation design will be required if the site or soil conditions are not consistent with the conditions assumed for the standard foundation designs as described in Section 17.3.4.2. For example, if slopes steeper than 2H:1V are present below the wall, if the soil is weaker than 32°, or if the ground water level is above the bottom of the foundation (Figure 17-4), a non-standard foundation design will be needed. If the foundation must be installed in rock, a non-standard foundation may also be required.

If non-standard foundation designs are required, the geotechnical designer should provide the following information to the structural designer:

- Description of the soil units using Unified Soil Classification System (Chapters 4 and 5).
- Ground elevation and elevation of soil/rock unit boundaries.
- Depth to the water table along the length of the wall.
- Earth pressure diagrams and design parameters developed in accordance with Chapter 15 and this section. Soil unit strength parameters that include effective unit weight, cohesion, φ, K_a, K_p, and K_{ae}. For shaft foundations, passive pressures are assumed to act over 3 shaft diameters, and a factor of safety of 1.5 should be applied to the passive resistance.
- The allowable bearing resistance for spread footings and estimated wall settlement.
- Overall wall stability.
- Any foundation constructability issues resulting from the soil/rock conditions.

The structural designer will use this information to develop a special foundation design for the noise barrier.

17.3.3 Construction Considerations

The presence of a high groundwater table could affect the construction of shaft foundations. The construction of noise barriers with shaft foundations would be especially vulnerable to caving if groundwater is present, or if have lose clean sands or gravels. The concrete in all shaft foundations have been designed to bear directly against the soils. Generally, temporary casing for drilled shafts should be removed. Special foundations designs may be required if the geotechnical designer determines that permanent casing is necessary. In this situation, the structural engineer must be informed of this condition.

17.4 Culverts

17.4.1 Overview

This section only addresses culverts, either flexible or rigid, that do not require foundation elements such as footing or piles. Culverts that require foundation elements are addressed in Chapter 8.

17.4.2 Culvert Design and Construction Considerations

Culvert design shall utilize the LRFD approach. For culverts, the soil loads and design procedures to be used for design shall be as specified in Sections 3 and 12 of the AASHTO LRFD Bridge Design Specifications. The following design situations are typically encountered regarding culverts:

1. The culvert simply needs to be replaced because of performance problems (e.g., leaking, partial collapse, or undersized), or a new culvert is needed, and open excavation is used to remove and replace the culvert, or to install the new culvert, and the excavation is simply backfilled.
2. The culvert simply needs to be replaced because of performance problems (e.g., leaking, partial collapse, or undersized), or a new culvert is needed, and the culvert is installed by "jacking" it through the existing embankment.
3. An existing culvert is extended and new fill is placed over the culvert.

For case 1, little geotechnical design is needed. The soil conditions in the fill and just below the culvert should be investigated, primarily to assess constructability issues such as excavation slopes and shoring design (usually done by the contractor). If soft soils are present near the bottom of the culvert, the feasibility of obtaining stable excavation slopes of reasonable steepness should be assessed. The presence of boulders in the fill or below the fill, depending on the shoring type anticipated, could influence feasibility. However, settlement and bearing issues for the new or replaced culvert should not be significant, since no new load is being placed on the soil below the culvert.

For case 2, the effect of the soil conditions in the fill on the ability to jack the culvert through the fill should be evaluated. Very dense conditions or the presence of obstructions in the fill such as boulders could make jacking infeasible. Ground water within the fill or the presence of clean sands or gravels that could "run" could again make jacking problematic, unless special measures are taken by the contractor to prevent caving. Since a stable jacking platform must be established, along with the shoring required to form the jacking and receiving pits, deeper test hole data adequate for shoring design must be obtained and analyzed to assess earth pressure parameters for shoring design, and to design the reaction frame for the jacking operation.

For case 3, differential and total settlement along the culvert is the key issue that must be evaluated, in addition to the case 1 issue identified above. See Chapter 9 for the estimation of settlement due to new fill.

17.5 Buildings

17.5.1 Overview

The provisions of this section cover the design requirements for small building structures typical of WSDOT rest areas, maintenance and ferry facilities. It is assumed these buildings are not subject to scour or water pressure by wind or wave action. Typically, buildings may be supported on shallow spread footings, or on pile or shaft foundations for conditions where soft compressible soils are present.

17.5.2 Design Requirement for Buildings

Foundations shall be designed in accordance with the provisions outlined in Chapter 18 of the 2003 International Building Code (IBC, 2002). This design code specifies that all foundations be designed using allowable stress design methodology. Table 1804.2 from the IBC provides presumptive values for allowable foundation bearing pressure, lateral pressure for stem walls and earth pressure parameters to assess lateral sliding. Note that these presumptive values account for both shear failure of the soil and settlement or deformation, which has been limited to 1 inch.

Materials	Allowable Foundation Pressure (psf)[d]	Lateral Bearing (psf/ft below natural grade)[d]	Coefficient of friction[a]	Resistance (psf)[b]
1. Crystalline bedrock	12,000	1,200	0.70	-----
2. Sedimentary and foliated rock	4,000	400	0.35	-----
3. Sandy gravel and/or gravel (GW & GP)	3,000	200	0.35	-----
4. Sand, silty sand, clayey sand, silty gravel and clayey gravel (SW, SP, SM, SC, GM, and GC)	2,000	150	0.25	-----
5. Clay, sandy clay, silty clay, clayey silt, silt and sandy silt (CL, ML, MH and CH	1,500[c]	100	------	130

a. Coefficient to be multiplied by the dead load.

b. Lateral sliding resistance value to be multiplied by the contact area, as limited by Section 1804.3 of the 2003 IBC.

c. Where the building official determines that in-place soils with an allowable bearing capacity of less than 1,500 psf are likely to be present at the site, the allowable bearing capacity shall be determined by a soils investigation.

d. An increase on one-third is permitted when using the alternate load combinations in Section 16.3.2 of the 2003 IBC that include wind or earthquake loads.

Allowable Foundation and Lateral Pressure
(as Provided in 2003 IBC, in Table 1804.2)
Table 17-3

In addition to using the 2003 IBC design code, the geotechnical designer should perform a foundation bearing capacity analyses (including settlement) using the methods outlined in Chapter 8 to obtain nominal resistance values. These design methods will result in ultimate (nominal) capacities. Normally, allowable stress design is conducted for foundations that support buildings and similar structures. Appropriate safety factors must be applied to determine allowable load transfer. Factors of safety to be used for allowable stress design of foundations shall be as follows:

Load Group	Method	*Minimum Geotechnical Factor of Safety, FS		
		Spread Footings	Shafts	Piles
ASD (unfactored DL + LL, or service load level)	Static shear strength analysis from soil/rock properties, compression	3.0	2.5	2.5
	Static analysis from soil/rock properties, uplift		3.0	3.0
	Load test conducted (number of tests depends on uniformity of conditions)		2.0	2.0
	WSDOT driving formula			2.5
	Wave equation with PDA (min. one per pier and 2 to 5% of the piles			2.5
	PDA with CAPWAP (min. one per pier and 2 to 5% of the piles			2.25

Minimum Factors of Safety for ASD Foundation Design
Table 17-4

The results of the ASD foundation bearing capacity analyses, after reducing the foundation bearing capacity by the specified FS from Table 17-4, and further reduced to meet settlement criteria for the foundation (normally, no FS is applied for settlement analysis results), should be checked against the IBC design code, and the most conservative results used.

For allowable stress design, spread footings on sandy soils may alternatively be designed for bearing and settlement by using Figure 17-5. When using Figure 17-5, a FS from Table 17-4 does not need to be applied, as the bearing stresses in the figure represent allowable bearing resistances. The design bearing resistance in Figure 17-5 has been developed assuming footing settlement will be limited to no more than 1 inch. The N-values needed to estimate bearing resistance in the figure should be determined from SPT blow counts that have been corrected for both overburden pressure and hammer efficiency, and hence represent $N1_{60}$ values (see Chapter 5).

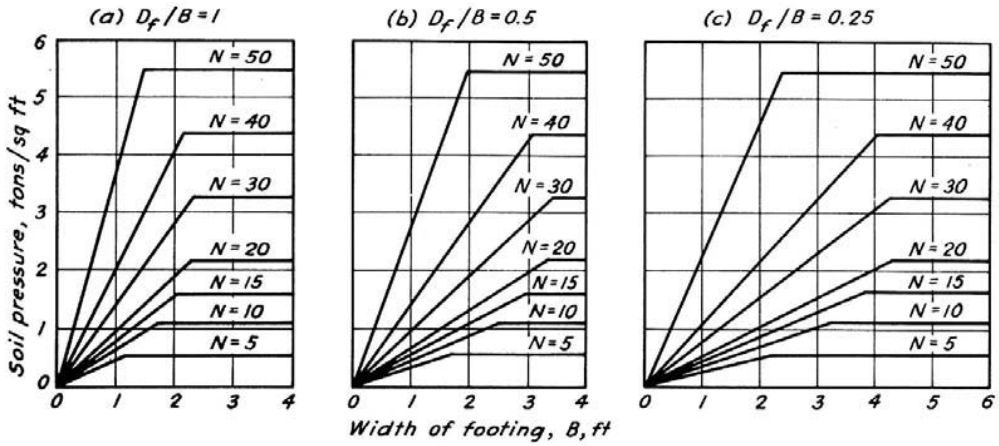

Design Chart for Proportioning Shallow Footings on Sand
(After Peck, et al., 1974)
Figure 17-5

Note that other issues may need to be addressed regarding the design of buildings and associated structures. For example, significant earthwork may be required. For cut and fill design, see Chapters 9 and 10. For the stabilization of unstable ground, see Chapter 13. If ground improvement is required, see Chapter 11. If retaining walls are required, see Chapter 15.

If septic drain field(s) are needed, local regulations will govern the geotechnical design, including who is qualified to perform the design (i.e., a special license may be required). In general, the permeability of the soil and the maximum seasonal ground water level will need to be assessed for septic system designs.

Note that in general, the foundations for the types of structures addressed in this chapter are not mitigated for liquefaction (see Chapter 6). However, for building foundations, liquefaction and other seismic hazards are at least assessed in terms of the potential impact to the proposed structures. Liquefaction and other seismic hazards are mitigated for building and other structures for which the International Building Code (IBC) governs and mitigation is required by the IBC.

17.6 References

AASHTO, 1988, *AASHTO Manual on Subsurface Investigations*.

AASHTO, 1989, *AASHTO Guide Specifications for Structural Design of Sound Barriers (including 2002 interim)*.

AASHTO, 2001, *AASHTO Standard Specifications for Structural Supports for Highway Signs, Luminaires, and Traffic Signals*.

AASHTO, 2002, *Standard Specifications for Highway Bridges,* American Association of State Highway and Transportation Officials, Seventeenth Edition, Washington, D.C., USA, 686 p.

AASHTO, 2004, *LRFD Bridge Design Specifications*, American Association of State Highway and Transportation Officials, Third Edition, Washington, D.C., USA.

International Code Council, Inc., (2002), *2003 International Building Code*. Country Club Hills, IL.

Patterson, D., 1962, *How to Design Pole-Type Buildings*, American Wood Preservers Institute, Chicago, 3rd edition.

Peck, R. B., W. E. Hanson, and T. H. Thornburn. 1974. *Foundation Engineering*. 2nd ed. John Wiley and Sons, Inc., New York, NY, p. 514.

Bridge Design Manual M 23-50

Design Manual M 22-01

Standard Plans For Road, Bridge and Municipal Construction M 21-01

Chapter 18 Geotechnical Design for Marine Structure Foundations

18.1 Overview

This chapter addresses the design of foundations to support marine structures. Such structures include dolphins, wing walls, wharfs, terminal structures and docks, pedestrian ramps, and terminal buildings. Other than the pedestrian ramps and terminal buildings, these structures must handle ship impact loads and wave loads. While this may affect the load groups required, the foundation designs and resistance factors required are the same as for other transportation facilities. Therefore, Chapter 8 shall be used for foundation design for marine structures, other than for terminal buildings, in which case the IBC (2003) should be used as the basis for foundation design.

18.2 Design Philosophy

Normally, structures subject to ship impact loads are designed to fully resist those loads. However, for ferry terminals, the greater risk in terms of financial loss and potential loss of life is the potential to damage the ship. Therefore, ferry terminals subject to ship impact loads need to be designed to be flexible enough to slow down the ship without damaging the ship. If foundation failure occurs, the choice is to have the foundation fail before the ship is damaged. This requires that foundation elements be designed with a lower margin of safety than is required by the current AASHTO specifications and Chapter 8.

18.3 Load and Resistance Factors for Marine Structures Subject to Ship Impact

To be determined.

18.4 References

International Code Council, Inc. (2002). 2003 International Building Code. Country Club Hills, IL.

Chapter 19 Infiltration Facility Design

19.1 Overview

Infiltration facility design includes the design of ponds, trenches and other BMP's designed to encourage infiltration of stormwater back into the ground. Geotechnical design of infiltration facilities includes assessment of the groundwater regime, soil stratigraphy, and hydraulic conductivity of the soil as it affects the hydraulic functioning of the infiltration facility, and the geotechnical stability of the facility (e.g., slope stability, affect of infiltration on stability of adjacent structures and slopes, and design of fills that must retain water for both slope stability and piping failure).

19.2 Geotechnical Investigation and Design for Infiltration Facilities

For infiltration investigation and design, the detailed requirements for the geotechnical site investigation, soil properties needed, groundwater characterization requirements, and design requirements are provided in the WSDOT Highway Runoff Manual (2004), Section 4-5. For geotechnical stability, the site investigation and design requirements provided in Chapters 2, 7, 9, and 10 are applicable.

19.3 References

Highway Runoff Manual M 31-16, 2004

Chapter 20 Unstable Slope Management

20.1 Overview

Unstable slope management provides the ability to rate and prioritize unstable slopes for remediation in consideration of the limitations of funds available to carry out the slope investigation. Actual design requirements for unstable slopes are provided in Chapters 13 and 14. The methodology used to prioritize the slopes based on risk of failure and impact to the public, and the costs and benefits of performing the needed repairs, are provided in the Unstable Slope Management System (USMS) Guidelines, and the article entitled, "Unstable Slope Management in Washington State" by Lowell and Morin (2000).

In the early 1990s WSDOT implemented a new project programming approach for The Highway Construction Program that involved prioritizing and programming projects based on defined service objectives. One of the service objectives within The Highway Construction Program is preserving the existing highway infrastructure in a cost effective manner in order to protect the public investment in the system. One of the action strategies in this service objective is to stabilize known unstable slopes. The funding level for the unstable slope service objectives has been set at $30 million dollars per biennium for 10 biennium (20 years). WSDOT has internally developed a comprehensive management system that can:

- Rationally evaluate all known unstable slopes along WSDOT highway facilities utilizing a numerical rating system for both soil and rock instabilities.
- Develop an unstable slope rank strategy, based on highway functional class that would address highway facilities with the greatest needs.
- Provide for early unstable slope project scoping, conceptual designs for mitigation, and project cost estimates that could be used for cost benefit analysis
- Prioritize the design and mitigation of unstable slope projects, statewide, based on the expected benefit, and ranked rating by highway facilities functional class.

The Unstable Slope Management System (USMS) is central to the process for management of unstable slopes. It is a SQL server database that is one of WSDOT's first truly interactive systems using internet technology and a GIS application. The application and database is designed for all internal WSDOT participants in the unstable slope management process to view and enter data pertaining to their respective job functions.

20.2 References

Lowell, S., and Morin, P., 2000, "Unstable Slope Management Washington State", *TR News 207*, pp 11-15.

Chapter 21 Materials Source Investigation and Report

21.1 Overview

A geotechnical site investigation of WSDOT-owned or -leased materials sources is required in order to determine the quality and quantity of materials available for WSDOT construction projects. These materials include gravel base, crushed surfacing materials, mineral and concrete aggregates, riprap, borrow excavation and gravel borrow, and filler. A Material Source Report (MSR) provides geotechnical documentation of the reconnaissance, exploration, sampling, laboratory testing, and development of the mining plan for the pit site or quarry site. This report includes a legal description of the location of the site and indicates the potential aggregate reserves for the material source. The Material Source Report requires the stamp of a licensed Engineering Geologist. The report is valid for the life of the material source.

Amendments to the MSR provide updates of any changes to the original Material Source Report, such as additional phases of exploration drilling, sampling and testing, mining development, extension of existing property boundaries of the material source, or changes with Department of Natural Resources reclamation permits or any other regulatory permits issued, etc. After a material source is used for project construction, a Pit Evaluation Report form is completed by the Project Engineer and submitted to the Regional Materials Engineer for review. The Pit Evaluation Report form is used to identify the quantity of material removed from the source, and includes comments about the production of the aggregate material extracted from the source for the project construction. This form contains valuable information on the use and production of material from the source.

Any new potential materials source sites considered need to be large enough in acreage to meet the quantity and quality requirements of the immediate construction project with adequate work and storage areas, but also the future construction project needs. It is also desirable that the source has sufficient material to support future maintenance needs in the area. When developing materials source sites, reclamation requirements and aesthetic considerations must be evaluated, to preserve or enhance the visual quality of the highway and local surroundings. This is especially important along scenic highways and adjacent to residential developments. Exposed sites, such as hillside borrow that cannot be visually reclaimed, should not be considered for development as a material source.

21.2 Material Source Geotechnical Investigation

It is preferred that existing approved material sources be used when there are suitable sites available within a reasonable haul distance to the project. When there are no approved WSDOT material sources available, the Regional Materials Engineer requests that the HQ Geotechnical Division conduct a materials source investigation. The materials source investigation typically consists of the following elements:

(a) **Evaluation of Existing Material Source Sites** – Any existing material source data within the project area are collected and reviewed. In project areas where materials sites are presently located, data that should be reviewed includes:

- Site Geology, from existing mapping, reports, etc.
- Aerial photographs, LIDAR coverage
- Past quality testing and production history of the materials source sites
- Surface and subsurface drainage in the site area
- Seasonal fluctuations in the water table, including water wells located on adjacent land that might be affected by those fluctuations, or moisture content of the deposit
- Claims made by adjacent landowners
- Contractor claims, including final settlements
- Maintenance use of the site

(b) **Geologic Field Exploration** – The geologic field exploration phase of the site investigation includes a reconnaissance level review of the material source site to begin the process of developing an understanding of the specific geology at the site, and how the site will be mined with consideration for existing adjacent land use (see Chapter 2). The reconnaissance incorporates the detailed review of the published geologic maps for the area or other published geologic or geophysical information in the vicinity, as well as LIDAR and aerial photographs. The reconnaissance phase review includes mapping existing outcrops and developing the strategy for the exploration drilling and sampling program, and the mine development of the site. During the initial reconnaissance to determine whether a site merits detailed exploration, some specific elements considered include:

- Topography
- Geology
- Test pits
- Test probes
- Test holes
- Representative photographs of the site
- Geologic mapping of existing exposures

Typically, a minimum of three test pits or test holes should be advanced during this phase of investigation. The site investigation should be planned and conducted in accordance with Chapters 2 and 3. The logging of the test pits and test holes should be in accordance with Chapter 4. To minimize exploration costs representative samples can be collected from existing cut faces for quality testing that includes Specific Gravity, Los Angeles Abrasion, and Degradation. A reconnaissance geologic report should be completed describing the site geology, preliminary field exploration and testing results. This report should be transmitted to the Regional Materials Engineer.

(c) **Detailed Site Exploration** – At a request by the Regional Materials Engineer, a detailed site exploration is conducted by the WSDOT Geotechnical Division. The Engineering Geologist submits an exploration plan to the Chief Engineering Geologist for review and concurrence prior to exploration. The test pits and test holes are logged in accordance with Chapter 4. The Engineering Geologist selects representative samples for quality testing. Refer to the *Construction Manual* Chapter 9, for additional discussion about sampling of natural deposits. On the basis of geologic considerations, the number, location, depth, and type of test pits or test borings are determined. In the absence of geological examination, the test pits or test borings are spaced roughly every 150 to 200 feet, on a grid, and extend to the base of the deposit, or to the depth required to provide the needed quantities. A significantly greater spacing (up to 500 feet) is used for nonexclusive leased sites or short-term leases that WSDOT has with other agencies.

For pit site investigations, exploration equipment that allows direct observation and sampling of the subsurface layers is preferred. The equipment can consist of backhoes, bulldozers, large diameter augers, or the Becker Hammer reverse circulation drilling method. Groundwater levels should be recorded during the site investigation. Where significant seasonal groundwater fluctuation is anticipated, observation wells should be installed to monitor water levels.

For quarry site investigations, wet rotary rock coring methods are used to determine subsurface conditions and to obtain samples for testing. Triple-tube core barrels are commonly needed to maximize core recovery. For riprap sources, fracture mapping includes careful measurement of the spacing of fractures to assess rock block sizes that can be produced by blasting. Also, identification of the type and amount of joint infilling is noted. Core samples are reviewed by the Engineering Geologist for assessment for quality testing for riprap or aggregates. If assessment is made on the basis of an existing quarry site face, it may be necessary to core or use geophysical techniques to verify that the nature of the rock does not change behind the face, or at depth.

Geophysical methods employed for material source exploration include seismic refraction surveys, electrical resistivity surveys, and ground penetrating radar. Downhole techniques can also be utilized to identify fracture orientation and condition; and software is available to interpret the fracture orientation in the core. For electrical resistivity surveys typically poor quality rock is denoted with low resistivity and good quality rock is denoted with high resistivity. Faults and fault splays can also be identified using electrical resistivity. Results from these geophysical methods supplies information that is used in developing the mining plan for a material source.

(d) **Special Considerations** – The Engineering Geologist must determine the appropriate shrink/swell factors (see Table 10-1) to convert the needed cubic yards to yards in place (bank yards) at the proposed source. This does not address or account for losses or wastage on construction.

The Engineering Geologist must assess the “indicated” quantity of material that is available in the potential material source. The Engineering Geologist uses knowledge of the mode of occurrence of the deposit in conjunction with the test pits and test borings to determine the surface plane area of the usable material.

The quantity of material reported as "indicated" is defined to mean that quantity of material estimated as being present at the site, including a safety factor. Extrapolation beneath the depth of test borings will not be made for calculation of "indicated" quantities unless well supported by geologic considerations.

A general formula for calculation of "indicated" quantity is:

$$Q = \frac{(LWD) - Cbs}{SF}$$

Where Q is the quantity in cubic yards, L is length in feet, W is width in feet, D is depth in feet, Cbs is the back slope correction, and SF is a safety factor. The back slope correction (Cbs) depends on the slope specified in the reclamation plan or mining plan. ***[Notes: Cbs = ½ (base × height) + perimeter (ft^2). To convert cubic feet to cubic yards, divide cubic feet by 27.]***

The safety factor (SF) used will vary with the size and type of deposit, the history of other deposits in the area, and the exploration equipment used. In order to determine the SF, calculate the quantity (Q) available without a SF and apply the appropriate SF from the following table.

Bank Yards Available Without Safety Factor	Suggested Safety Factor
0 to 30,000 cubic yards	2.00
30,000 to 60,000 cubic yards	1.70
60,000 to 150,000 cubic yards	1.45
150,000 to 300,000 cubic yards	1.35
300,000 plus cubic yards	1.25

Other considerations are: (1) Determine the surface drainage at the site, noting areas of ponding water, swamps, sloughs, or streams. It is important to determine flooding possibilities or surface flow after periods of heavy rainfall, during spring snow melt, and from artesian conditions. (2) Describe the location of the groundwater table, if known, along with seasonal variations. Identify any springs in the area that will affect the development of the site, or if production operations can impact the water source. (3) For aggregate sources, it is important that the degradation and wear characteristics be determined. The history of use of the aggregate is especially important for aggregates with Los Angeles Wear test values greater than 25 and Degradation test values less than 45. (4) An estimate of oversize material (greater than 10 inches in diameter) determined in percent by volume is necessary. The estimate is given in a percent range, such as, 15 to 25 percent oversize. Also describe the largest size cobble or boulder observed during the site investigation, as well as any glacial erratics.

21.3 Materials Source Report

The Engineering Geologist prepares a Materials Source Report (MSR), following the outline presented below. The MSR provides documentation for the detailed site exploration, sampling and laboratory testing, and subsequent development of a pit or quarry site. The report reviews and discusses the site geology, exploration field data and testing information, slope stability, and groundwater information that has been acquired for the site, and indicates the mining plan for development of the site.

(a) **Introduction** – A brief description of the location of the site including county, state highway, milepost, and haul road access to the site.

(b) **Source Description** – The source description includes the legal description of the property location (e.g., Township, Range, Section, ¼ ¼ sections). The description also includes the size of the material source in acres. Ownership is identified and any pertinent lease information (e.g., leased to WSDOT for exclusive use, or nonexclusive use). Also, any zoning restriction, or other restrictions or constraints are identified. Stockpiles and waste piles are identified on the site plan map with estimated cubic yards (volume).

(c) **Topography, Vegetation and Climate** – The general geomorphology and topography of the area are described, including drainage features. Vegetation and climate should also be discussed.

(d) **Geotechnical Field Exploration** – For quarry site investigations, the number and location of exploratory borings advanced, and drilling methodology should be described (e.g., core drilling with a CME 850 with auto hammer using an HQ core barrel; retrieving a 1/2 inch diameter core sample). The total footage of core retrieved should be identified. For pit site investigations, the number and location of test pits, or Becker Hammer borings advanced should be identified. The test pits and test borehole locations are presented on a site map included in an Appendix. Copies of the boring logs and test pit logs are contained in an Appendix. Color photographs of the rock core or pit samples are included in an Appendix.

(e) **Laboratory Testing** – Representative samples are selected by the engineering geologist from the subsurface exploration drilling for laboratory testing for quality and to verify field visual identification. The preliminary laboratory quality tests include T-85 for Specific Gravity, T-96 for Los Angeles Wear, and WSDOT test method T-113 for degradation. The test results are used to interpret the distribution of the good quality and the poor quality material at the site. The test results are depicted on the geologic cross-sections and included in a table in the Appendix. Other tests may be performed according to the Standard Specifications Manual for specific products to be used in the construction project.

(f) **Regional Geology** – The regional geologic setting includes a description of the processes that occurred for the existing regional geology.

(g) **Site Geology** – Based on the regional geologic setting, the specific geology at the material source site should be described. Surface drainage should be identified and described, including the identification of springs or drainages that are natural or manmade. The depth to ground water and any seasonal changes should be described and discussed. This information should be included as a table in the Appendix. Natural or designed slope stability at the site should be described and discussed.

A stratigraphy for the material source is developed from the site geology, and from the test borings and test pits logs. Geologic cross-sections are developed to demonstrate the distribution and quality of material available at the site. Overburden and waste material encountered in the borings, quality test results, and groundwater should be identified on the geologic cross-sections. Included in the discussion of the stratigraphy should be a description of good and poor quality rock, as identified on each cross-section, and a summary paragraph for each cross-section.

(h) **Groundwater** – Ground water levels encountered during the subsurface investigation are recorded. Where significant seasonal groundwater fluctuation is anticipated, open standpipe piezometers are installed to monitor ground water levels. If appropriate, dataloggers may be installed in the open standpipe piezometers to monitor groundwater fluctuation. Rainfall gauges, or local weather stations can be utilized to gain information about local rainfall events and their effect on groundwater at the source.

(i) **Quality of Material** – The quality of the material at the site is based on the representative samples selected for laboratory testing for quality. The quality tests are typically Los Angeles Wear, Specific Gravity and Degradation, but can include other tests depending on the product to be produced from the material source site. The test results should be presented on the geologic cross-sections as well as in a table in the Appendix.

(j) **Quantity of Material** – The quantity of useable material present at the site is based on the occurrence of the deposit in conjunction with the test pits or borings to the determined depth to a surface plane over a certain area. The quantity of material reported as “indicated” is defined to mean the quantity of material estimated as being present including a safety factor.

(k) **Slope Stability** – Slope stability analyses should be completed to indicate the stability of the slopes of the material source during mining development, and for reclamation.

(l) **Mining Considerations** – The mining plan indicates how the resource will be developed and demonstrates the logic for the excavation and development of the site. The mining plan for the site should indicate which part of the site is to be mined first, second, third, etc. A discussion of any special problems associated with the material present at the site, such as a description of oversize material, including large rock encountered, or excessive overburden. The waste areas for overburden and stripping material should be identified on the mining plan map. The location of haul roads, gates, fences, and the elevation of the mining floor should be included in the mining plan map. Slope angles, based on slope stability analyses, should be designated for interim and final reclamation. For quarry sites, slopes should be designed, based on the rock parameters mapped, and identified specifically at the quarry. Locations of haul road, stockpile storage, waste, overburden and elevation of the pit or quarry floor should be identified on the reclamation plan map.

(j) **Appendices**

- Figures:

  Location MapSite Plan map, with topography, boring and cross section locations Geologic Cross Sections, with boring locations and quality test results Mining Plan Reclamation Plan
- Tables:

  Boreholes identified with depths and laboratory quality testing results

  Boreholes with Groundwater elevations
- Logs of Test Borings (edited for consistency with lab data)
- Laboratory Test Reports
- Calculations of Quantity Determinations
- Photographs of the site, photos of rock core samples, pit samples

Chapter 22 Geotechnical Project Development, Reports, and Support for Design-Build Projects

22-1 Overview

This chapter describes the geotechnical support needed for projects where WSDOT intends to use the Design-Build (DB) method of contract delivery and the geotechnical policies that govern that support.

DB differs from traditional Design-Bid-Build (DBB) projects in that the DB team is responsible for the final design, and the means and methods needed to successfully construct the project compatible with the design. In the DBB contract method of delivery there can be a reasonable anticipation of potential means and methods that may be selected by a contractor. Hence, given a 100% design, establishing a geotechnical baseline with respect to the subsurface and site conditions that may be encountered can be more objectively established. Of significance to the preparation of geotechnical documents for DB is that foundation types and how they are constructed may change, retaining walls may move affecting both height and wall types considered during the development of the project concept, size and location of cuts and fills may change, and any effects on adjacent sensitive structures and utilities may be significantly different than anticipated in the Conceptual Design. Right of way (ROW) lines may also be affected as well as temporary construction easements (TCE).

In DB, the Design-Build team is the responsible Engineer of Record (EOR) and has the latitude in completing the majority of the project design such that it meets the performance requirements and is in compliance with the contract documents. While the WSDOT will always retain primary ownership of the project and its long-term operations and maintenance, the DB contract delivery method allocates the majority of the responsibility and risk for project design and construction to the Design-Builder to foster innovation and creativity.

These differences relative to DBB have a fundamental effect on the type of geotechnical support needed and how it is carried out. The geotechnical support provided by the Headquarters Geotechnical Office or the department's geotechnical consultants includes:

- A geotechnical investigation to identify site geotechnical conditions and to gather the geotechnical information needed to provide a common and consistent basis for bidding.
- Verification of the feasibility of the project Conceptual Design and identification of areas of geotechnical risk.
- The development of geotechnical Technical Requirements to be included in the Request for Proposals (RFP) as well as the Geotechnical Data Report (GDR) and Geotechnical Baseline Report (GBR) to be included as part of the contract.
- The development of Geotechnical Reference and other reference documents.
- Once the contract advertisement begins, a review of proposals, if requested by the project management; this will depend on the importance and complexity of the project geotechnical issues.

- A review of geotechnical Alternative Technical Concepts (ATCs) for consistency with the contract design requirements and WSDOT design policy.
- Review of geotechnical designs, plans, and other geotechnical submittals after award and execution.
- Project office assistance when geotechnical problems occur during the life of the project.

The chapter sections that follow address each of these areas to provide the guidance needed by the Headquarters Geotechnical Office staff and department geotechnical consultant staff to successfully develop and support department DB projects. Since this chapter is for internal geotechnical staff and internal consultant staff, and the department offices who interact with these staff, to develop and carry out DB projects, this chapter should be excluded from the Mandatory Standards that are included in the contract documents.

22-2 Definitions

Geotechnical documents provided as part of or in support of a DB project include the Geotechnical Data Report (GDR), the Geotechnical Baseline Report (GBR), Geotechnical Reference documents, and other related Reference Documents. A GDR only presents factual geotechnical and geological information obtained through site and subsurface investigation, and laboratory testing, for the project, and should not include interpretive information. The GDR is a contract document. The Geotechnical Baseline Report (GBR) is a contract document and a risk allocation document provided to Proposers of DB projects that provides the primary contractual interpretation of geotechnical conditions, in addition to the factual data provided in the GDR, for Proposers to use as the basis for their proposals. The GBR interpretation of geotechnical conditions is based on the factual information in the GDR plus interpretation of the geotechnical conditions that is not strictly based on the available factual information in the GDR. The GBR is also used after contract award for evaluating differing site conditions claims.

This GBR should not refer to any part of a reference document, as doing so will make the reference document contractual and negate its reference document status. Geotechnical Memoranda and other reference documents include other geotechnical information, interpretations, and conceptual designs that were used as the basis for evaluating the feasibility of the project Conceptual Design, and possibly alternatives to the final project Conceptual Design, and to assess areas of geotechnical risk for the project. The Geotechnical Reference documents are not included as Contract Documents, but are made available to Proposers in an appendix of the RFP for information only, not to be used as the basis for their proposal.

The geotechnical information to be included in RFP is project-specific and can include all or only some of the documents identified above. For example, during concept development for the project, it may be determined that the overall geotechnical risks are minimal, warranting only the inclusion of a GDR as a contract document and incorporating a financial allowance to manage any unforeseen risks. The level of the potential financial allowance is a decision made by the project management with input from the HQ Geotechnical and Construction Offices and the project geotechnical team.

22-2.1 Field Investigation Requirements for Pre-Advertisement Design-Build Project Documents

Past experience has demonstrated that an inadequate project geotechnical investigation can lead to excessive risk both in terms of schedule and cost. Therefore, it is important to do the right amount of geotechnical investigation to provide the subsurface information needed to help mitigate those risks. These data can then be used to develop contract information that will provide potential Proposers with a consistent understanding of the site geotechnical conditions and the impact those conditions may have on the project design and the constructability of that design. This section summarizes the level of geotechnical investigation and analysis that should be considered prior to contract advertisement for DB projects. Decisions regarding the level of geotechnical investigation needed should be developed as early in the project as possible with region project office input, including the development of a geotechnical risk profile for the project that is mutually agreed upon by both region and headquarters offices. These early efforts will also be useful to develop a strategy for establishing geotechnical baselines.

The level of geotechnical field investigation necessary for assessment of potential geotechnical risks, with consideration to the baseline configuration for the project, and for preparation of the GDR and GBR should be conducted as early in the project as possible. The goal is to leave enough time in the project development schedule for the Geotechnical Office, the region project office, and possibly others such as the HQ Construction Office and region management, to identify and come to agreement on the level of geotechnical risk WSDOT should be taking and how to allocate that risk. The project baseline configuration geotechnical investigation shall be approved by the State Geotechnical Engineer, or an approved designee. The State Geotechnical Engineer, Region/Headquarters management, and the region project team will review and agree upon the short-term (i.e., during the contract) and long-term (i.e., after the contract is completed to the end of the design life of the facility) project performance risks when determining the initial level of investigation required. During the execution of the field exploration program, field findings may significantly alter those risks and require changes to the field investigation program. The level of geotechnical investigation shall consider the amount of information necessary to develop the Conceptual Design for the DB project and also to provide the appropriate level of confidence in baseline statements and thereby reduce the risk of differing site condition claims. If there is a disagreement regarding the level of geotechnical investigation required, the issue(s) may be escalated to the next higher management level to resolve the disagreement.

The amount of geotechnical investigation needed is project specific, and shall be determined based on the guidelines provided herein.

The goals of the typical geotechnical investigation for DB projects are to:

1. Identify the distribution of soil and rock types for the Conceptual Design, and assess how the material properties will affect the design and construction of the project elements.

2. Define the ground water and surface water regimes for the project concept design. It is especially important to determine the depth, and seasonal and spatial variability, of groundwater or surface water. The locations of confined water bearing zones, artesian pressures, and seasonal or tidal variations should also be identified. The geotechnical investigation will not be sufficient to fully define these groundwater issues, but should be enough to identify potential groundwater problems and risks.

3. Identify and consider any impacts to adjacent facilities that could be caused by the construction of the Conceptual Design.

4. Identify and characterize any geologic hazards that are present within or adjacent to the project limits (e.g., landslides, rockfall, debris flows, liquefaction, soft ground or otherwise unstable soils, seismic hazards) that are already known or discovered during the baseline configuration geotechnical investigation that could affect the Conceptual Design as well as adjacent facilities that could be impacted by the construction of the Conceptual Design.

5. Assess the feasibility of the proposed alignments, including the feasibility and conceptual evaluation of retaining walls and slope angles for cuts and fills, and the effect the construction of the Conceptual Design could have on adjacent facilities.

6. Assess potential project stormwater infiltration or detention sites with regard to their feasibility, and to gather at least one year of ground water data in accordance with storm water regulations if possible within the project development schedule.

7. Identify potential suitability of on-site materials as fill, and/or the usability of nearby materials sources.

8. For structures including, but not limited to, bridges and cut-and-cover tunnels, large culverts, walls, bored tunnels, trenchless technology, provide adequate subsurface information to assess feasibility of the Conceptual Design and to help quantify risks.

9. For projects that may include ground improvement to achieve the project Concept Design, provide adequate information to assess feasibility and to assess the potential impacts to adjacent facilities due to the ground improvement.

10. For projects that may include landslides, rockfall areas, and debris flows, provide adequate information to evaluate the feasibility of various stabilization or containment techniques.

To accomplish these goals, the typical geotechnical investigation should consist of the following:

- A review of historical records of previous investigations and construction of existing facilities.
- A geological site reconnaissance of the proposed alignment, focusing on all key project features, and identification of potential hazards within and adjacent to the alignment.
- A subsurface investigation consisting of an appropriate combination of borings, cone probes, field testing, field instrumentation (such as piezometers or inclinometers), geophysical surveys, and laboratory testing.

As a starting point, utilize existing subsurface information from records and augment that information with additional borings, cone probes and/or geophysical surveys to fill in gaps in the existing information.

Typically, to produce a GDR and GBR to support a 15 to 30% project design, a 50 percent or greater level geotechnical subsurface field investigation (including any existing (historical) borings that can be relied upon) is typically needed relative to a full PS&E level geotechnical investigation for final design as defined elsewhere in the GDM and referenced documents. The actual subsurface investigation conducted for a specific project may vary significantly from this target, however, depending on the uncertainty in the details of the Conceptual Design, the potential for variations in alignments and structure locations, the complexity of the site and project, the availability of preexisting subsurface information, and the potential for risk. As stated above, the level of geotechnical investigation undertaken should be developed collaboratively with the Region Project Office, as well as managers in the Region and in Headquarters as needed, based on the level of risk WSDOT should be taking.

Any new boring logs produced shall be consistent with the requirements in Chapter 4.

The geotechnical investigation may also include an assessment of the potential to encounter hazardous waste, since that potential and its location may be strongly tied to the subsurface stratigraphy and ground water regime. However, Environmental Services, and/or the region, or their consultants, have the lead in such investigations, working as a team with the Headquarters Geotechnical Office to complete that work. From a contract standpoint, it is desirable to “baseline” the hazardous/ contaminated materials/water in the same manner that the geotechnical project attributes are baselined. It is also desirable from a contract standpoint that this hazardous/contaminated materials/water information be consolidated in one place in the contract. The decision of whether this is captured in the GBR or an Environmental hazardous/contaminated materials/water baseline report should be coordinated with Environmental Services.

Regarding historical and subsurface investigations to assess the potential to encounter archeological artifacts, such investigations are conducted through environmental Services, the region, or their consultants. In general, the results of archeological investigations will not be included in the GDR, GBR, and Geotechnical Memoranda for WSDOT DB projects, but are contained in a separate report.

It should be recognized that at the time of the field exploration many of the project Conceptual Design features investigated may not be defined. The geotechnical engineer developing the GBR will have to utilize professional judgment in addition to assistance from the WSDOT project team to assess what project elements for the Conceptual Design are to be investigated and where they will likely be located in order to perform an adequate field investigation. When developing the exploration plan to investigate the project Conceptual Design, or other specific concept alternatives requested by the WSDOT project office, ensure that the plan is sufficient to develop an overall characterization of the project corridor, and also sufficient as a basis for pricing the final Conceptual Design portrayed in the RFP.

Risks to be considered that could require a more detailed investigation than what may be considered typical shall include, but not be limited to, the following:

- Liquefaction and other seismic hazards.
- Very soft soils.
- Areas of previous or potential instability (e.g., Landslides, rockfall, severe erosion).
- Site and soil conditions that may affect constructability.
- High groundwater, or complex groundwater regime.
- Shallow bedrock surface that is highly variable either in depth from the surface or in quality/strength.

The degree of investigation necessary to properly define and allocate these risks depends on the nature of the risk, the amount of detailed geotechnical information needed to mitigate that risk, and the impact such risks have on the potential project costs. To determine the amount of geotechnical investigation required, consider the impact of such conditions on the ability of Proposers to adequately estimate project costs and project staging/scheduling. It will remain up to the Design-Builder to assess the limitations in the exploration program provided in the RFP and perform the requisite explorations to be compliant with the GDM and AASHTO requirements during final design.

22-3 Purpose and Content of the Geotechnical Reports Included in the Contract Documents

In general, this section follows the guidelines provided in Essex, et al. (2007) as published by the American Society of Civil Engineers. As specifically applied to WSDOT DB projects, the geotechnical reports included in the contract documents shall be as described in this section.

Geotechnical Data Report (GDR) – The GDR contains all the factual geotechnical data gathered for the project, and shall be included as part of the project contract. The GDR should contain the following information:

- A description of the geotechnical site exploration program, including any explanatory information needed to understand the boring logs and in-situ field test logs.
- The logs of all borings, logs of other subsurface investigation techniques such as cone or geophysical, test pits, and other site investigations, including any existing subsurface geotechnical data.
- Ground water measurements.

- A description of the geologic and seismic setting for the project corridor (at a regional level).
- Results of all field tests conducted, including description and results.
- Installation details, logs, and measurements results of all geotechnical field instrumentation installed for the project or existing geotechnical instrumentation and measurement results usable for the project.
- A description of all laboratory tests conducted and the test results, as well as any previous geotechnical laboratory test results that are relevant for the project.

Existing boring and other subsurface data that are available within the project corridor should not be included in the GDR unless their level of accuracy is consistent with the new subsurface data obtained for the project. This older data should be included in a separate appendix to the RFP as an historical geotechnical reference document that is available to proposers as background information only, not part of the contract, and not be used to determine differing site conditions.

The GDR may also include subsurface profiles and cross-sections at key locations within the project limits, provided that subsurface data interpretations such as interpolation between borings to develop stratigraphy, as well as the geologic interpretation of the strata, are not done. In this case, boring logs are presented in a way that shows spatial relationships between the borings, but no stratagraphic interpretation of the factual data (i.e., the boring logs) is done. This also applies to the boring logs themselves – the boring logs should not contain geological interpretations of the soil and rock units encountered, but should only present the factual observations and test data.

Alternatively, these subsurface profiles and cross-sections that include the stratagraphic and geological interpretations could be included in a separate geotechnical interpretive report (a Geotechnical Reference document) included in an Appendix to the RFP for information only.

Regarding geotechnical field tests reports for exploration methodologies such as pressuremeter testing or geophysical testing, even though the test report will likely contain an interpretation of the raw test data, such test reports should still be included with the GDR. These test interpretations are fairly standardized and are customarily considered to be factual design data in geotechnical practice.

If there is historical information about past construction, the information should be summarized and included in the GDR, especially, for example, if there were geotechnical impacts such as boulders, high groundwater, soft soils, or documented changed conditions.

Geotechnical Baseline Report (GBR) – The GBR is an interpretive geotechnical document used to establish a common understanding between the contractor and the owner (WSDOT) of the subsurface conditions and their potential impact and effect of risk on the design and construction of the project Conceptual Design.

The primary focus of the GBR is to establish baselines regarding geotechnical subsurface conditions present within the project, but specifically focused on the project Conceptual Design as portrayed in the RFP. These baselines should clearly define the specific geotechnical conditions the DB contractor should consider as the basis for developing their price proposal. These baselines are also used to allocate risk between the owner (WSDOT) and the contractor. The GBR baselines are not intended to be used for final design. The GDR and geotechnical data generated by the Design-Builder are used as the basis for final design. The GBR should not contain design or construction requirements; instead, design and construction requirements belong in the RFP and associated mandatory standards.

When establishing baselines in the GBR, it must be recognized that subsurface conditions are inherently variable, and that variability can translate to design and construction risk. The baseline, however, must be as clear, concise, and measurable as possible, conveying to potential Proposers what to assume about the condition being baselined (i.e., essentially, a "line in the sand") in a way that all Proposers will understand and interpret consistently. Baselines do not necessarily need to be supported by the available technical data. Baselines are engineering interpretations or assumptions about geotechnical conditions that can affect the design of a project feature or its constructability, expressed as contractual representations of anticipated geotechnical conditions (Essex, et al., 2007). The baseline is intended to resolve, at least contractually, the uncertainty in the geotechnical data or its interpretation. Baseline statements are not required to be factual but should address specific risk elements that WSDOT requires the Design-Builder to address or consider. However, baseline statements should not be overly broad or unrepresentative of the conditions such that the risk allocation is excessively shifted to the Design-Builder. It is important that baselines be as realistic as possible.

WSDOT DB contracts allow changes to occur. These changes could occur during the procurement process by the use and approval of an Alternative Technical Concept, or during contract administration by the use of the project changes to the specifications. Both of these options are administered based on the contract documents and each process may or may not include impacts or changes related to baseline assumptions.

Baseline statements should not be considered applicable to alternate locations of the project features that may be proposed by the Design-Builder, or Work that is not in conformance with the anticipated Work. To define the locations for which the baselines are applicable, contractual baseline boundaries should be established to define the area for which the baselines are applicable. This could either be done based on the project Conceptual Design plan feature locations and maximum offsets from those feature locations, or based on a maximum offset from each boring plus an anticipated variance of strata boundaries relative to each boring, or possibly some combination of the two.

Baselines do not need to be provided for every feature in a project that could require geotechnical considerations (e.g., fills or foundations placed on very dense moist or dry soils, small walls, cuts and fills for which the risk and impact of failure is low). Only the higher risk geotechnical features and issues in a project require baselines. What specifically is to be baselined should be determined collaboratively with the project office, and others as needed. The RFP should be clear that for items not baselined, the Design-Builder assumes the risk for bid and design assumptions as well as constructed means, methods, and sequences.

Where possible, baselines should be location and, as much as possible, stratigraphic unit specific, and applicable to the type(s) of construction anticipated with consideration to the Conceptual Design for the project. However, baselines should also avoid getting into specific means and methods. For example, where the need for deep bridge foundations exists in the Conceptual Design for the project, and loose wet sand is present, the baseline should alert proposers that caving conditions are present that may need to be considered. However, the baseline should not tell the proposers to assume that full depth casing will be required to get through the caving soil. An exception to this is possibly to baseline types of construction that are likely to not be successful given the soil/rock conditions. For example, use of sheet piles that must be driven into a soil unit that is very dense or hard, or bouldery, or use of sump pumps in excavations where very permeable water bearing strata will be intersected.

In order to have baselines tied to specific subsurface conditions, a description and depth of soil and rock strata encountered in the borings should be provided. Typically, soil and rock strata locations in each boring can be summarized in a table of specific, interpreted, strata boundary locations in each of the borings. It must be clear that these strata locations are to be used only with respect to the baselines (i.e., these are Baseline Stratigraphic Units, or BSUs), and the proposers should expect the potential for those specific soil and rock strata and their depths will need adjustment for final design once the selected proposer conducts the final geotechnical explorations for the project. Stratigraphic units should not be identified in the boring logs themselves, as the additional subsurface explorations conducted by the Design-Builder for final design could require some adjustments to the stratigraphy.

Stratigraphic profiles or cross-sections in which the boring log specific BSUs discussed above are connected together to provide an overall two-dimensional stratigraphy should not be provided in the GBR. However, if the location, depth, or thickness of a high risk soil stratum in the vicinity of a specific Conceptual Design project feature such as a bridge is highly variable, the geotechnical engineer developing the GBR may need to consider including an assumed depth/location/thickness of the stratum in the baseline. This will be a risk allocation decision and as such, agreement between the Geotechnical Office, the region project design office, and possibly other offices such as Headquarters Construction and the Bridge Office should be sought before including this type of baseline in the GBR.

For project features such as walls and major cuts or fills that are not well defined and subject to significant changes relative to the project Conceptual Design, it may not be feasible to establish locations of BSUs that are specific enough to establish BSU specific baselines. In such cases, it may not even be possible to establish specific baselines, other than for known unstable areas such as landslides, or known locations of obstructions.

The baselines may draw upon data in the GDR as well as in geotechnical reference documents (see Section 22-5). However, the GBR should not specifically reference Geotechnical and other related Reference Documents that are not contractual.

Specific subject areas where baselines may be developed typically include the following, depending on the Conceptual Design and the nature of the project:

- Bridge foundation issues
- Bridge abutment and approach fill issues
- Retaining wall issues

- Seismic design issues, including liquefaction and its effects
- Embankment stability and settlement
- Cut stability
- Stormwater infiltration facilities
- Unstable slope issues and potential mitigation issues
- Ground improvement issues
- Utility impacts
- Noise wall foundation issues
- Groundwater issues
- Excavation and shoring issues, including potential dewatering issues
- Use of excavated materials
- Impact of poor ground, other than as specifically addressed above
- Known and potential obstructions
- Contaminated soils, though this is usually handled separately

In general, geotechnical design parameters (e.g., soil friction angles, earth pressures, permeability values) should not be baselined. If there is a significant risk issue associated with the selection of a geotechnical design parameter that WSDOT cannot afford to be determined by the Design-Builder as the Engineer of Record, the specification of such design parameters shall be approved by the State Geotechnical Engineer and the WSDOT project managers. These geotechnical design parameters should be described or defined in the RFP Section 2.6, and not in the GBR. Examples of this include the seismic ground response parameters for a given site, what soils are to be considered liquefiable, high risk troublesome soils such as glacialacustrine soils as described in GDM Section 5-13.3, high risk landslide deposits, etc. This may be especially important for situations where the geotechnical designer has to use considerable judgment in establishing the design parameters, or where the design procedures and standards of practice are poorly defined.

For extremely large, complex projects, or for specific features that are long and/or uncertain as to their specific location, size, and extent of the geotechnical work needed, it may be too unwieldly to develop specific baselines for everything in the project that have significant geotechnical risks. In that case, the effort and costs expended to develop the GBR need to be strategic so that the most costly risks are addressed in enough detail to clearly apportion those risks. This strategy should be developed in collaboration with the project office and program managers. If it appears necessary to "scale down" the GBR baselines to accommodate these situations, this shall be done in consultation with the State Geotechnical Engineer and the Deputy State Construction Engineer as early as possible in the project, so that there is adequate time to make the course corrections needed for approval of the GBR baseline approach by the State Geotechnical Engineer and the Deputy State Construction Engineer to be obtained so that project development delays are avoided.

See Essex, et al. (2007) for additional guidance on developing GBRs, and their contents.

22-4 Geotechnical and Other Reference Documents

Geotechnical reference documents include interpretive or informational documents that should be made available to bidders, but that should not be considered part of the contract documents. Such documents include, but are not limited to, the following:

- Geotechnical interpretive reports containing results of preliminary geotechnical design used to establish the feasibility of the project design concept and to help quantify geotechnical risks.
- Interpretive geotechnical background information that was used to assess the feasibility of the project Conceptual Design or which could be used by Design-Builders as background information in support of their geotechnical design activities (e.g., geologic stratigraphy).
- As-built information for existing facilities within or adjacent to the project corridor that may or may not be directly affected by the project.
- Detailed construction records for existing facilities within the project corridor.
- Historical information about the project corridor.

The RFP could include as-built information and detailed construction records for existing facilities within the project corridor. In general it has been WSDOT policy to place the risk for the accuracy of as-built documents on the Design-Builder. Therefore, it is important from a contract interpretation standpoint where the as-built information is included in the RFP (e.g., in an appendix), and how it is identified in the RFP. In general, as- built information should not be included in the GBR or GDR, because doing so would place the risk of their accuracy and completeness on WSDOT.

Preliminary geotechnical engineering to develop the Conceptual Design and evaluate its feasibility during the contract development phase should be conducted. Since this is interpretive information developed for the purpose of developing the DB project documents, this information should not be included as part of the contract, but should be made available to Proposers as informational via a reference document.

The focus of any geotechnical analysis or design conducted to develop a DB project should be to evaluate feasibility, and to assess the risk of bidders having wide swings in their bids due to geotechnical issues that have not been adequately defined. For example, if shafts or piles are proposed as foundations for a bridge, the specific foundation loads will not be known accurately enough during GBR and RFP development to determine foundation depths and sizes. Therefore, detailed analysis of foundation skin friction and end bearing resistance would be of little use. The Design- Builder would have to redo such calculations during final design anyway. What is of more use is whether or not shaft or pile foundations are feasible to install, considering impacts to adjacent facilities, ability for equipment of sufficient size to access potential pier locations, etc.

Typically, preliminary geotechnical design to assess feasibility and risk associated with the project Conceptual Design will consist of one or more of the following preliminary geotechnical design activities:

- Feasibility of proposed alignments with consideration to feasible slopes or need for walls, and the potential impact of those fill or cut slopes and walls on adjacent facilities.
- Structure foundation feasibility and risk, and potential impacts to adjacent facilities.
- Conceptual seismic hazard assessment, including site specific ground motion studies (if appropriate for the site and project scope) and the potential for liquefaction and associated seismic hazards caused by liquefaction.
- Preliminary assessment of other existing or potential geologic hazards such as landslides, rockfall, debris flows, etc., as well as the conceptual feasibility of mitigation strategies.
- Potential need for ground improvement to stabilize unstable ground, liquefaction, and excessive settlement, including the feasibility of various ground improvement techniques and their potential impact on adjacent facilities.
- Whether or not on-site materials will be usable as construction materials.
- Feasibility of site conditions present to infiltrate runoff water.
- Need for dewatering, its feasibility, and its potential impact to adjacent facilities.
- Any other preliminary geotechnical design activities needed to assess risks, to help establish baselines that will be included in the GBR, to ensure feasibility of the project Conceptual design, and to assist the WSDOT project office to develop an engineer's estimate for the project.

If there is potential for soil liquefaction at the site, a preliminary assessment of the depth and extent of the liquefiable soils should be considered. A preliminary assessment of the feasibility of potential mitigation schemes may also be considered, as well as an assessment of the impact of liquefaction on the proposed project features, depending on the impact to project feasibility. A more detailed liquefaction investigation and hazard assessment may need to be included in the contract documents to ensure bidding consistency if one or more of the following is true:

- The liquefaction hazard could affect the decision on whether to widen or replace an existing bridge or similar structure.
- The design assumptions and parameters needed to make that liquefaction assessment could vary significantly between proposers such that the project scope could vary significantly (e.g., some proposers feel no stabilization is needed, while others feel that stabilization is necessary or the bridge must be replaced rather than widened).

Similarly, for complex site conditions and large, important structures, it may be necessary to include the results of site specific seismic ground motion or seismic hazard studies in the contract documents rather than just as informational geotechnical reference documents (see Section 22-6).

22-5 Geotechnical RFP Development

The geotechnical portions of the RFP should rely heavily upon the GDM and the AASHTO Bridge Design Specifications. Since the GDM must function as both a practice manual for in-house staff and WSDOT's geotechnical consultants and as a contract document for DB projects, the RFP should clarify how to interpret the GDM for the purposes of the DB contract, to fit the GDM within the context of the project specific contract. Furthermore, the GDM may not cover every geotechnical design situation needed in the DB project, and the RFP may need to include additional design provisions not covered by the GDM, AASHTO, or other available design specifications or manuals. The RFP essentially is contractually establishing the geotechnical engineering design requirements for the DB project.

Table 1-2, defines words used in the GDM to convey design policy (e.g., "should," "shall," "may"). These words also have important contractual implications in the RFP for conveying whether or not the Design-Builder has any options with regard to the specific design requirement. The GDM also identifies design policy issues and options that require specific approval from the State Geotechnical Engineer and/ or Bridge Design Engineer. In such cases, as it applies to DB contracts, the Design-Builder should assume that design provisions requiring approval from the State Geotechnical Engineer and/or the Bridge Design Engineer are not approved, but can only be considered through the Alternative Technical Concepts (ATC) process. Since these address design policy issues, the State Geotechnical Engineer and/or Bridge Design Engineer in this context are not to be considered equivalent to the designer of record for the DB contractor, as decisions on these policy issues are not within the authority of the Engineer of Record.

The GDM is written to augment or supersede the AASHTO Bridge Design Specifications; therefore, if there is an apparent conflict between the GDM and the AASHTO specifications or other referenced documents, the GDM should be considered to be higher in the order of precedence than the AASHTO specifications or other referenced design documents.

With regard to the geotechnical conditions (not design and construction requirements), the GBR should be considered to be highest in the order of precedence in the RFP.

22-6 Geotechnical Investigation During RFP Advertisement

Often with DB, specific project elements cannot be reasonably defined at the time the contract documents are produced. To help minimize contingency costs in the bids and limit risk, it may be desirable to perform supplemental geotechnical investigations after the RFP has been advertised (while the bidders are preparing proposals) to augment the GDR and GBR. Whether or not supplemental geotechnical investigations should be completed during the RFP process is determined by mutual agreement between the State Geotechnical Engineer and Region/Headquarters management prior to advertisement of the RFP. The defined term for this in the RFP is as follows: Supplemental Geotechnical Data Report (SGDR). The Contract Document developed pursuant to ITP Section X.X.X, that contains factual subsurface data collected prior to the Proposal Date, and which is included in Appendix XX. Should supplemental investigation occur, the short-listed Proposers should submit requests for additional information including locations and depths of borings. The State will evaluate the requests and develop an exploration program that eliminates duplication of borings in specific locations. Doing

this will eliminate potential conflicts between Proposers, unwanted congestion due to the presence of multiple sets of drilling rigs and multiple crews, and to excessive costs through elimination of duplicated efforts. An example of Instructions to Proposers (ITP) language for a supplementary boring program is provided in Appendix 22-A.

Once the supplemental boring program is completed, the new subsurface data should be included in the GDR through a contract addendum. If the supplemental borings conflict with the GBR, an amendment to the GBR should be developed by the Headquarters Geotechnical Office or the WSDOT Geotechnical Consultant who developed the GBR and included as an addendum to the contract.

22-7 Geotechnical Support for Design-Build Projects During RFP Advertisement and Post-Award

Regarding the geotechnical review of proposals, the focus of this geotechnical support is to evaluate geotechnical aspects of the Proposal in terms of the scoring criteria spelled out in the Instructions to Proposers. Whether or not geotechnical review of bidder proposals is required will depend on the importance and complexity of the geotechnical issues in the project, and if there are any scoring criteria focused on geotechnical issues. Alternative Technical Concepts (ATCs) may also be proposed during the bidding phase. Similarly, the geotechnical support needed includes the assessment of the technical adequacy of the ATC relative to the contract design documents, or that at least the ATC will provide a level of quality that is equal to or better than the contract Conceptual Design and that is consistent with accepted design practice which in general is defined by the RFP.

Once the contract is awarded, geotechnical oversight by the owner (WSDOT) is required to ensure that the final design and its construction meet the contract requirements. This geotechnical oversight is also needed to address unanticipated site conditions (see Differing Site Conditions clause in 1-04.7 of the RFP, i.e., Request for Proposals, in WSDOT projects) and potential ambiguities in the contract specifications, if such problems occur.

From this point forward, owner (WSDOT) geotechnical support is focused on review of contractor design and construction submittals and assisting the project office with oversight to verify that the Design-Builder is appropriately addressing geotechnical design or construction problems as they come up, in accordance with the contract. The geotechnical support person must become intimately familiar with the RFP and referenced contractual documents, as those documents dictate the focus of the geotechnical submittal reviews. The geotechnical support person must consider themselves to be a member of the WSDOT project team, and the findings of their review activities are therefore provided to the WSDOT project managers for implementation. The goal is to provide the WSDOT project management with a technical assessment as to whether or not the Design-Builder met the contract technical requirements, verifying that their Quality Control/Quality Assurance (QC/QA) program with regard to geotechnical issues is being properly implemented and is effective in producing a geotechnical design that meets the contract requirements. The purpose of the geotechnical review is not to provide the DB contractor with QC/QA of their design, as the contractor is responsible for their design QC/QA.

Ordinarily, the DB Contract Technical Requirements will require the Design- Builder to define a process in their Quality Management Plan for recording, logging, tracking, responding to, and resolving WSDOT design review comments. This process is managed by the Design-Builder. Geotechnical comments should be incorporated into this process.

Designer preferences, or differences in opinion between the reviewer's and the Design-Builder's judgments/assumptions, etc., are generally not relevant to these reviews. The focus must be on compliance of the geotechnical design/construction with the contract requirements.

This does not mean that the geotechnical support person is conducting these reviews only at the "30,000 foot level." There may be times when the geotechnical support person must do a comparative design to figure out if the contractor's submittal does meet the contract intent. But in other cases, an evaluation based on the reviewer's geotechnical engineering experience may be sufficient. If problems in the design start to repeat themselves, this may be an indication that either the contractor is not interpreting the contract in a way that is consistent with how WSDOT is interpreting it, or the contractor's design QC/QA is not fully functional. In such cases an oversight review (i.e., a Quality Verification, or QV, review) of the Design-Builder's QA/QC process should be conducted, documenting the review in the Construction Audit Tracking System (CATS), and issuing Non-conforming Issue Reports (NCIs) as appropriate so that the problem can be properly addressed within the provisions of the contract.

The geotechnical support person may also be involved in over-the-shoulder reviews and design task forces of the Design-Builder's work as it progresses. The purpose of such reviews and involvement in the task forces is to not provide design QC/QA or technical direction to the Design-Builder, but simply to work in a cooperative manner with the Design-Builder to head off problems in the design before they get too far along, keeping in mind that the focus is on meeting the contract requirements.

There may be cases where the site conditions encountered by the contractor through additional subsurface explorations or during construction appear to differ from those in the contract documents. Just like any other potential differing site conditions situation, the geotechnical support person should be working with the project management team and Headquarters Construction Office to provide a technical assessment of the claim.

22-8 References

Essex, R. J., 2007, *Geotechnical Baseline Reports for Construction – Suggested Guidelines*, ASCE, Reston, Virginia, 62 pp., http://cedb.asce.org/cgi/wwwdisplay.cgi?0710539.

22-9 Appendices

Appendix 22-A Example Supplemental Geotechnical Boring Program ITP Language

Appendix 22-A Example Supplemental Geotechnical Boring Program ITP Language

Language that may be used in the ITP regarding the availability of a supplemental boring program is provided below. Note that in the first paragraph, this example language allows up to 5 borings to be selected by each of the proposers (typically, three proposers), though for proposed borings that are in close proximity of one another, borings may be combined. This number of supplemental borings (up to 3 × 5 = 15 borings) would typically apply to larger, more complex projects. A smaller number of borings could be used for smaller less complex projects. Ultimately, the number of supplemental borings is a project-specific decision that is made jointly between the Geotechnical Division and the project team.

22-A-1 Supplemental Geotechnical Data Report

Each Proposer is entitled to obtain certain additional geotechnical information by means of a Supplemental Geotechnical Data Report that WSDOT will conduct at WSDOT's own expense. Under the Supplemental Geotechnical Data Report, Proposers may request WSDOT to perform up to five additional test borings and to provide an analysis of the resultant samples.

A request under the Supplemental Geotechnical Data Report must be submitted no later than the Request for Supplemental Boring Deadline set forth in this ITP. Each request shall set forth the location (by station and offset) and highest bottom elevation of the requested borings. Each request shall also include specific requests regarding the frequency and depth of field vane tests; the locations of split-spoon samples and Standard Penetration Tests; the length and diameter of rock cores; the depth of disturbed samples, undisturbed samples, and rock cores sought by the Proposer; and the tests the Proposer desires WSDOT to conduct in relation to the sample gathered.

WSDOT will make reasonable efforts to comply with Proposers' requests under the Supplemental Geotechnical Data Report, but is not obligated to conduct borings at the precise locations requested. To the extent boring locations requested by one or more Proposers are within 20 feet of each other, the locations will be averaged and only one test boring will be conducted. If a Proposer's boring is averaged with another Proposer's boring, neither Proposer will be allowed an additional boring for this supplemental boring program. Survey personnel provided by WSDOT will establish the boring locations and elevations. A qualified inspector working for WSDOT will inspect the borings. WSDOT staff or an independent, qualified drilling contractor will perform the borings. At the option of the Proposers, each Proposer may dispatch a maximum of one person to observe the drilling, sampling, testing, and coring, and shall coordinate transportation of the chosen observer to the drilling site with WSDOT. The Proposers' on-site observers shall not interfere with the operation of the surveyor, driller, or inspector.

The WSDOT drill crew or drilling contractor will conduct the following sampling and testing:

- Split-spoon samples and Standard Penetration Tests at 5-foot intervals and every change in stratum.
- Minimum NQ-size rock cores.
- Minimum 10-foot rock cores with RQD.
- Field vane shear tests in soft clays.
- Electronic cone penetrometer testing.
- Conventional laboratory classification testing on disturbed soil samples.
- Conventional laboratory tests on rock samples.
- Such other tests requested by a Proposer and agreed to by WSDOT at WSDOT's sole discretion.

WSDOT will perform the test borings in whatever manner or sequence it deems appropriate at WSDOT's sole discretion. The Supplemental Geotechnical Data Report, including the final boring logs and laboratory test results, will be provided to all Proposers according to Section 1 of this ITP and is included as Appendix G9 of the RFP. To the extent not consumed by testing, the samples resulting from the Supplemental Geotechnical Data Report will be turned over to the Design-Builder immediately after the Contract is awarded.

WSDOT makes no representation as to whether the Supplemental Geotechnical Data Report will be sufficient for the Proposer to prepare its Proposal. Each Proposer must make this determination independently based upon its own independent judgment and experience. Failure by a Proposer to submit a request for test borings under the Supplemental Geotechnical Data Report constitutes a conclusive presumption that the Proposer has determined that it does not require any additional geotechnical data to properly design, construct, and price the Work, or that it will obtain any necessary geotechnical data at its own expense using its own forces. If permits are required for supplemental borings (in addition to those permits already required for the Project), WSDOT may not be able to permit the borings within the deadline.

Chapter 23 Geotechnical Reporting and Documentation

23.1 Overview and General Requirements

The Geotechnical Office, and consultants working on WSDOT projects, produce geotechnical reports and design memorandums in support of project definition, project design, and final PS&E development (see Chapter 1). Also produced are project specific Special Provisions, plan details, boring logs, Summary of Geotechnical Conditions, and the final project geotechnical documentation. Information developed to support these geotechnical documents are retained in the Geotechnical Office files. The information includes project site data, drilling inspector's field logs, test results, design calculations, and construction support documents. This chapter provides standards for the development and detailed checklists for review of these documents and records, with the exception of borings logs, which are covered in Chapter 4, Materials Source Reports, which are covered in Chapter 21, and Geotechnical Baseline Reports (GBR), which are covered in Chapter 22. The general format, review, and certification requirements for these documents are provided in Chapter 1.

The Region Materials Offices also produce reports that contain geotechnical information and recommendations as discussed in Chapter 1 (e.g., Region Soil Reports). As applicable, the standards contained within this chapter should also be used for the development of these regional reports.

Documents and project geotechnical documentation/records produced by the Geotechnical Office, and consultants working on WSDOT projects, shall meet as applicable the informational requirements listed in the following FHWA manual:

- FHWA, 2003, Checklist and Guidelines for Review of Geotechnical Reports and Preliminary Plans and Specifications, Publication No. FHWA ED-88-053, Updated edition.

This FHWA manual also includes a PS&E review checklist. The PS&E review checklist contained in this FHWA manual should be used to supplement the WSDOT Geotechnical Office PS&E review checklist provided in Appendix 23-A. These checklists should be used as the basis for evaluating the completeness of the PS&E regarding incorporation of the project geotechnical recommendations and geotechnical data included in the geotechnical report for the project.

23.2 Report Certification and General Format

Table 23-1 provides a listing of reports produced by the Geotechnical Office, the type of certification needed to be consistent with the certification policies provided in Chapter 1 and WSDOT Executive Order E1010.00, and the general format that would typically be used. For formal geotechnical reports, the signatures and stamps will be located on the front of the report. For memorandums, a signature/stamp page will be added to the back of the memorandum. All those involved in the engineering for the project must sign these documents (i.e., the designer(s), the reviewer(s), and the State Geotechnical Engineer, or the individual delegated to act on behalf the State Geotechnical Engineer), and if licensed and as appropriate, certify the documents as summarized in Table 23-1.

For reports that cover individual project elements, a geotechnical design memorandum may suffice, with the exception of bridge reports and major unstable slope design reports, in which case a formal geotechnical report should be issued. For project reports, a formal geotechnical report should be issued. For geotechnical reports that are sent to agencies outside of WSDOT, a letter report format will be used in place of the memorandum format. Alternatively, a formal report transmitted with a letter may be used.

E-mail may be used for geotechnical reporting in certain circumstances. E-mails may be used to transmit review of construction submittals, and Region soil reports sent to the Geotechnical Office for concurrence. E-mails may also be used to transmit conceptual foundation or other conceptual geotechnical recommendations. In both cases, a print-out of the e-mail should be included in the project file. For time critical geotechnical designs sent by e-mail that are not conceptual, the e-mail should be followed up with a stamped memorandum or report as soon as possible. A copy of the e-mail should also be included in the project file.

For reports produced by others outside of WSDOT, the certification requirements described herein are applicable, but the specific report format will be as mutually agreed upon by the Geotechnical Office and those who are producing the report.

Report	General Format	+Type of Certification Required	Who Certifies?		
			Designer and Report Writer	Primary Licensed Technical Reviewer or Supervisor	State Geotech. Engineer (SGE), Chief Foundation Engineer (CFE), or Chief Engineering Geologist (CEG)
Preliminary Bridge Report	Memorandum	PE seal, dated but not signed	Seal if licensed	Seal	Seal if acting as primary technical reviewer, or if final recommendations are influenced by the review at this level
Final Bridge Report	Formal bound report	PE seal, signed and dated (+LEG optional)	Seal if licensed	Seal	Seal if acting as primary technical reviewer, or if final recommendations are influenced by the review at this level
Preliminary Ferry Terminals, Docks, etc.	Memorandum	PE seal, dated but not signed	Seal if licensed	Seal	Seal if acting as primary technical reviewer, or if final recommendations are influenced by the review at this level
Final Ferry Terminals, Docks, etc.	Formal bound report	PE seal, signed and dated (+LEG optional)	Seal if licensed	Seal	Seal if acting as primary technical reviewer, or if final recommendations are influenced by the review at this level
Retaining Wall/ Reinforced Slope Report	Formal bound report	PE seal, signed and dated (+LEG optional)	Seal if licensed	Seal	Seal if acting as primary technical reviewer, or if final recommendations are influenced by the review at this level
Line Work Report (cuts, fills, etc.)	Formal bound report	PE seal, signed and dated, or both PE and LEG seals, depending on geologic complexity	Seal if licensed	Seal	Seal if acting as primary technical reviewer, or if final recommendations are influenced by the review at this level
Small Foundation Report (signals, noise walls, etc.)	Memorandum, unless otherwise requested	PE seal, signed and dated	Seal if licensed	Seal	Seal if acting as primary technical reviewer, or if final recommendations are influenced by the review at this level
Ponds, Environmental Mitigation	Memorandum, unless otherwise requested	PE seal, signed and dated, or both PE and LEG seals, depending on geologic complexity	Seal if licensed	Seal	Seal if acting as primary technical reviewer, or if final recommendations are influenced by the review at this level

WSDOT Geotechnical Report Certification and Format Requirements
Table 23-1

Report	General Format	+Type of Certification Required	Who Certifies?		
			Designer and Report Writer	Primary Licensed Technical Reviewer or Supervisor	State Geotech. Engineer (SGE), Chief Foundation Engineer (CFE), or Chief Engineering Geologist (CEG)
Structure Preservation (bridges, walls, etc.) Reports	Memorandum, unless otherwise requested	PE seal, signed and dated (+LEG optional)	Seal if licensed	Seal	Seal if acting as primary technical reviewer, or if final recommendations are influenced by the review at this level
Rockfall, Rockslope Design Reports	Formal bound report	PE or LEG seal, signed and dated	Seal if licensed	Seal	Seal if acting as primary technical reviewer, or if final recommendations are influenced by the review at this level
Landslide Reports	Formal bound report	PE or LEG seal, signed and dated, or both PE and LEG seals if structures are involved	Seal if licensed	Seal	Seal if acting as primary technical reviewer, or if final recommendations are influenced by the review at this level
Pit and Quarry Reports and Reviews	Memo if review only; otherwise, formal bound report	LEG seal, signed and dated, for report; seal required for review memo only if changes to interpretation or design in the report are recommended	Seal if licensed, as noted under Certification Required	Seal, as noted under Certification Required	Seal, as noted under Certification Required, if acting as primary technical reviewer, or if final recommendations are influenced by the review at this level
Geologic hazard assessments (e.g., for critical area ordinance issues)	Can be a formal report or a letter report	LEG seal, signed and dated (also include PE seal, if structures involved)	Seal if licensed	Seal	Seal if acting as primary technical reviewer, or if final recommendations are influenced by the review at this level
Geology and Soils Discipline and EIS Reports	Usually a formal bound report	PE or LEG seal, signed and dated, or both PE and LEG seals, depending on geologic complexity or if structures are involved	Seal if licensed	Seal	Seal if acting as primary technical reviewer, or if final recommendations are influenced by the review at this level

Report	General Format	+Type of Certification Required	Who Certifies?		
			Designer and Report Writer	Primary Licensed Technical Reviewer or Supervisor	State Geotech. Engineer (SGE), Chief Foundation Engineer (CFE), or Chief Engineering Geologist (CEG)
Consultant Report Reviews	Letter to consultant or memo. to Region	None, unless changes to design are recommended, in which case review letter is sealed (signed and dated) by PE, or LEG, or both, depending on geologic complexity	Seal review letter if licensed, as noted under Certification Required	Seal review letter, as noted under Certification Required	Seal review letter if acting as primary technical reviewer, or if final recommendations in review letter are influenced by the review at this level, as noted under Certification Required
Emergency Work	E-mail or memo.	None for preliminary assessment; for final design, PE or LEG seal, signed and dated, or both PE and LEG seals, depending on geologic complexity and if structures are involved	Seal for final design if licensed	Seal for final design	Seal for final design if acting as primary technical reviewer, or if final recommendations are influenced by the review at this level
CSL Reports	Memorandum	PE seal, signed and dated	Seal if licensed	Seal	Seal if acting as primary technical reviewer, or if final recommendations are influenced by the review at this level
Construction Support resulting in engineering changes (must result in a change order, and must affect the engineering intent of the contract design)	Memorandum	PE or LEG seal, signed and dated, or both PE and LEG seals, depending on geologic complexity and if structures are involved	Seal if licensed	Seal	Seal if acting as primary technical reviewer, or if final recommendations are influenced by the review at this level
Construction Submittals	Memorandum	None	None	None	N/A

Report	General Format	+Type of Certification Required	Who Certifies?		
			Designer and Report Writer	Primary Licensed Technical Reviewer or Supervisor	State Geotech. Engineer (SGE), Chief Foundation Engineer (CFE), or Chief Engineering Geologist (CEG)
Special Provisions and Summary of Geotechnical Conditions	Usually an appendix to report; memorandum if sent separately	PE or LEG seal, signed and dated, or both PE and LEG seals, depending on nature of Special Provision	Seal if licensed	Seal	Seal if acting as primary technical reviewer, or if final recommendations are influenced by the review at this level
Construction Plans	Plan sheets	PE or LEG seal, signed and dated, or both PE and LEG seals, depending on nature of plan sheets	None	Seal	Seal if acting as primary technical reviewer
Final Geotechnical Project Documentation	Formal bound report	None required, since all subdocuments have been stamped	None	None	N/A

•Some judgment may be used on whether or not to use a memorandum format for small walls, line projects, and small rockfall or rockslope projects.

+Projects that require significant, non-routine, geologic interpretation to provide a correct site characterization and geologic interpretation of design properties may also require a LEG seal.

23.3 Geotechnical Office Report Content Requirements

Design Manual M 22-01 Chapter 610, includes lists of the geotechnical information that should be provided in final geotechnical reports addressing various specific geotechnical subject matters. Specifically addressed in the *Design Manual* M 22-01 Chapter 610 are geotechnical reports providing final recommendations for earthwork, hydraulic structures (including infiltration facilities), foundations for signals, signs, etc., retaining walls, unstable slopes (landslides, rockfall, etc.), rock slopes, bridge foundations, and WSF projects.

A more detailed description of the geotechnical information and types of recommendations that should be provided in geotechnical reports is provided in the sections that follow. Both conceptual level reports and final reports are addressed.

23.3.1 Conceptual or Preliminary Level Geotechnical Reports

Conceptual level geotechnical reports are typically used to provide geotechnical input for the following:

- Developing the project definition
- Development of preliminary bridge and WSF facility layouts
- Conceptual geotechnical studies for environmental permit development activities,
- Reconnaissance level corridor studies,
- Development of EIS discipline studies, and
- Geotechnical Baseline Reports (GBR) for design-build projects (see Chapter 22 for details on the GBR).

Preliminary level geotechnical reports are typically used to provide geotechnical input for the following:

- The determination of preliminary location and size of infiltration facilities,
- Alternative analyses (e.g., TS&L for structures, preliminary grading analyses, etc.)
- Rapid assessment of emergency repair needs (e.g., landslides, rockfall, bridge foundation scour, etc.)

Conceptual level geotechnical reports are in general developed based on a minimum of an office review of existing geotechnical data for the site, and generally consist of feasibility assessment and identification of geologic hazards. Geotechnical design for conceptual level reports is typically based on engineering judgment and experience at the site or similar sites. For preliminary level design, a geological reconnaissance of the project site and a limited subsurface exploration program are usually conducted, as well as some detailed geotechnical analysis to characterize key elements of the design, adequate to assess potential alternatives and estimate preliminary costs. For conceptual level design of more complex projects with potentially unusual subsurface conditions, or potential instability, a geotechnical reconnaissance of the site should be conducted in addition to the office review to assess the site conditions. Note that for preliminary design of infiltration facilities, the seasonal ground water depth should be established early in the project to assess feasibility (i.e., during project definition), since it usually takes a minimum of one season to characterize groundwater conditions. A minimum of one to two test holes, with piezometers installed, are usually required to establish the water table depth for this purpose. Additional test holes may be needed during final design (see Chapter 19 and the WSDOT *Highway Runoff Manual*).

These conceptual or preliminary level reports should contain the following elements:

1. A general description of the project, project elements, and project background.
2. A brief summary of the regional and site geology. The amount of detail included here will depend on whether the report is at the conceptual or preliminary level, and on the type of report. For example, Critical Area Ordinance reports and EIS discipline studies will tend to need a more detailed discussion on site and regional geology than would a conceptual bridge foundation report, an emergency landslide, or a scour repair evaluation report.
3. A summary of the site data available from which the conceptual or preliminary recommendations were made.
4. A summary of the field exploration conducted, if applicable.
5. A summary of the laboratory testing conducted, if applicable.
6. A description of the project soil and rock conditions. The amount of detail included here will depend on whether the report is at the conceptual or preliminary level, and on the type of report. For preliminary design reports in which new borings have been obtained, soil profiles for key project features (e.g., bridges, major walls, etc.) may need to be developed and tied to this description of project soil and rock conditions.
7. A summary of geological hazards identified that may affect the project design (e.g., landslides, rockfall, debris flows, liquefaction, soft ground or otherwise unstable soils, seismic hazards, etc.), if any.
8. A summary of the conceptual or preliminary geotechnical recommendations.
9. Appendices that include any boring logs and laboratory test data obtained, soil profiles developed, any field data obtained, and any photographs.

Special requirements for the content of discipline reports for EA and EIS studies are provided in *Environmental Procedures Manual* M 31-11, specifically Chapter 420.

23.3.2 Final Geotechnical Design Reports

Final (PS&E level) geotechnical reports are in general developed based on an office review of existing geotechnical data for the site, a detailed geologic review of the site, and a complete subsurface investigation program meeting AASHTO and FHWA standards, or as augmented in this manual. Final geotechnical reports should contain the following elements:

1. A general description of the project, project elements, and project background.
2. Project site surface conditions and current use.
3. Regional and site geology. This section should describe the site stress history and depositional/erosional history, bedrock and soil geologic units, etc.

4. Regional and site seismicity. This section should identify potential source zones, potential magnitude of shaking, frequency, historical activity, and location of nearby faults. This section is generally only included in reports addressing structural elements (e.g., bridges, walls, marine terminal structures, etc.) and major earthwork projects.
5. A summary of the site data available from project or site records (e.g., final construction records for previous construction activity at the site, as-built bridge or other structure layouts, existing test hole logs, geologic maps, previous or current geologic reconnaissance results, etc.).
6. A summary of the field exploration conducted, if applicable. Here, a description of the methods and standards used is provided, as well as a summary of the number and types of explorations that were conducted. Include also a description of any field instrumentation installed and its purpose. Refer to the detailed logs located in the report appendices.
7. A summary of the laboratory testing conducted, if applicable. Again, a description of the methods and standards used is provided, as well as a summary of the number and types of tests that were conducted. Refer to the detailed laboratory test results in the report appendices.
8. Project Soil/Rock Conditions. This section should include not only a description of the soil/rock units encountered, but also how the units tie into the site geology. Ground water conditions should also be described here, including the identification of any confined aquifers, artesian pressures, perched water tables, potential seasonal variations, if known, any influences on the ground water levels observed, and direction and gradient of ground water, if known. If rock slopes are present, discuss rock structure, including the results of any field structure mapping (use photographs as needed), joint condition, rock strength, potential for seepage, etc.

   These descriptions of soil and rock conditions should in general be illustrated with subsurface profiles (i.e., parallel to roadway centerline) and cross-sections (i.e., perpendicular to roadway centerline) of the key project features. A subsurface profile or cross-section is defined as an illustration that assists the reader of the geotechnical report to visualize the spatial distribution of the soil and rock units encountered in the borings and probes for a given project feature (e.g., structure, cut, fill, landslide, etc.). As such, the profile or cross-section will contain the existing and proposed ground line, the structure profile or cross-section if one is present, the boring logs (including SPT values, soil/rock units, etc.), and the location of any water table(s). Interpretive information contained in these illustrations should be kept to a minimum. What appears to be the same soil or rock unit in adjacent borings should not be connected together with stratification lines unless that stratification is reasonably certain. The potential for variability in the stratification must be conveyed in the report, if a detailed stratification is provided. In general, geologic interpretations (e.g., Vashon till, Vashon recessional, etc.) should not be included in the profile or cross-section, but should be discussed more generally in the report.

A subsurface profile must always be provided for bridges, tunnels, and other significant structures. For retaining walls, subsurface profiles should always be provided for soil nail walls, anchored walls, and non-gravity cantilever walls, and all other walls in which there is more than one boring along the length of the wall. For other wall situations, judgment may be applied to decide whether or not a subsurface profile is needed. For cuts, fills, and landslides, soil profiles should be provided for features of significant length, where multiple borings along the length of the feature are present. Subsurface cross-sections must always be provided for landslides, and for cuts, fills, structures, and walls that are large enough in cross-section to warrant multiple borings to define the subsurface cross-section.

9. Summary of geological hazards identified and their impact on the project design (e.g., landslides, rockfall, debris flows, liquefaction, soft ground or otherwise unstable soils, seismic hazards, etc.), if any. Describe the location and extent of the geologic hazard.
10. For analysis of unstable slopes (including existing settlement areas), cuts, and fills, background regarding the following:
    - analysis approach,
    - assessment of failure mechanisms,
    - determination of design parameters, and
    - any agreements with Region or other customers regarding the definition of acceptable level of risk.

    Included in this section would be a description of any back-analyses conducted, the results of those analyses, comparison of those results to any laboratory test data obtained, and the conclusions made regarding the parameters that should be used for final design.
11. Geotechnical recommendations for earthwork (fill design, cut design, usability of on-site materials as fill). This section should provide embankment design recommendations, if any are present, such as the slope required for stability, any other measures that need to be taken to provide a stable embankment (e.g., geosynthetic reinforcement, wick drains, controlled rate of embankment construction, lightweight materials, etc.), embankment settlement magnitude and rate, and the need and extent of removal of any unsuitable materials beneath the proposed fills.

    Cut design recommendations, if any are present, are also provided in this section, such as the slope required for stability, seepage and piping control, erosion control measures needed (concept only – other WSDOT offices will provide the details on this issue), and any special measures required to provide a stable slope.

    Regarding usability of on-site materials, soil units should be identified as to their feasibility of use as fill material, discussing the type of fill material for which the on-site soils are feasible, the need for aeration, the effect of weather conditions on its usability, and identification of materials that should definitely be considered as waste.

12. Geotechnical recommendations for rock slopes and rock excavation. Such recommendations should include, but are not limited to, stable rock slope, rock bolting/dowelling, and other stabilization requirements, including recommendations to prevent erosion/undermining of intact blocks of rock, internal and external slope drainage requirements, feasible methods of rock removal, etc.
13. Geotechnical recommendations for stabilization of unstable slopes (e.g., landslides, rockfall areas, debris flows, etc.). This section should provide a discussion of the mitigation options available, and detailed recommendations regarding the most feasible options for mitigating the unstable slope, including a discussion of the advantages, disadvantages, and risks associated with each feasible option.
14. Geotechnical recommendations for bridges, tunnels, hydraulic structures, and other structures. This section should provide a discussion of foundation options considered, the recommended foundation options, and the reason(s) for the selection of the recommended foundation option(s), foundation design requirements (for strength limit state - ultimate bearing resistance and depth, lateral and uplift resistance, for service limit state - settlement limited bearing, and any special design requirements), seismic design parameters and recommendations (e.g., design acceleration coefficient, soil profile type for standard AASHTO response spectra development, or develop non-standard response spectra, liquefaction mitigation requirements, extreme event limit state bearing, uplift, and lateral resistance, and soil spring values), design considerations for scour when applicable, earth pressures on abutments and walls in buried structures, and recommendations regarding bridge approach slabs. Detailed reporting requirements for LRFD foundation reports are provided in Section 23.2.3.
15. Geotechnical recommendations for retaining walls and reinforced slopes. This section should provide a discussion of wall/reinforced slope options considered, the recommended wall/reinforced slope options, and the reason(s) for the selection of the recommended option(s), foundation type and design requirements (for strength limit state - ultimate bearing resistance, lateral and uplift resistance if deep foundations selected, for service limit state - settlement limited bearing, and any special design requirements), seismic design parameters and recommendations (e.g., design acceleration coefficient, extreme event limit state bearing, uplift and lateral resistance if deep foundations selected) for all walls except Standard Plan walls, design considerations for scour when applicable, and lateral earth pressure parameters (provide full earth pressure diagram for non-gravity cantilever walls and anchored walls). For nonproprietary walls/reinforced slopes requiring internal stability design (e.g., geosynthetic walls, soil nail walls, all reinforced slopes), provide minimum width for external and overall stability, embedment depth, bearing resistance, and settlement, and also provide soil reinforcement spacing, strength, and length requirements in addition to dimensions to meet external stability requirements. For proprietary walls, provide minimum width for overall stability, embedment depth, bearing resistance, settlement, and design parameters for determining earth pressures. For anchored walls, provide achievable anchor capacity, no load zone dimensions, and design earth pressure distribution. Detailed reporting requirements for LRFD wall reports are provided in Section 23.2.3.

16. Geotechnical recommendations for infiltration/detention facilities. This section should provide recommendations regarding infiltration rate, impact of infiltration on adjacent facilities, effect of infiltration on slope stability, if the facility is located on a slope, stability of slopes within the pond, and foundation bearing resistance and lateral earth pressures (vaults only). See the *Highway Runoff Manual* for additional details on what is required for these types of facilities.
17. Long-term or construction monitoring needs. In this section, provide recommendations on the types of instrumentation needed to evaluate long-term performance or to control construction, the reading schedule required, how the data should be used to control construction or to evaluate long-term performance, and the zone of influence for each instrument.
18. Construction considerations. Address issues of construction staging, shoring needs and potential installation difficulties, temporary slopes, potential foundation installation problems, earthwork constructability issues, dewatering, etc.
19. Appendices. Typical appendices include design charts for foundation bearing and uplift, P-Y curve input data, design detail figures, layouts showing boring locations relative to the project features and stationing, subsurface profiles and typical cross-sections that illustrate subsurface stratigraphy at key locations, all boring logs used for the project design (includes older borings as well as new borings), including a boring log legend for each type of log, laboratory test data obtained, instrumentation measurement results, and special provisions needed.

The detail contained in each of these sections will depend on the size and complexity of the project or project elements and subsurface conditions. All of these report elements may not be applicable to all geotechnical reports, especially if the report is for a specific project element that is limited in geotechnical scope, such as a culvert replacement, a single wall, an infiltration pond, a sign bridge, etc. In such cases, a briefer report is acceptable. Furthermore, design memoranda that do not contain all of the elements described above may be developed prior to developing a final geotechnical report for the project to meet project schedule needs.

23.3.3 Special Reporting Requirements for LRFD Foundation and Wall Designs

The geotechnical designer should provide the following information to the structural designer for Load and Resistance Factor Design (LRFD):

23.3.3.1 Footings

To evaluate bearing resistance, the geotechnical designer provides qn, the unfactored nominal (ultimate) bearing resistance available for the strength and extreme event limit states, and qserv, the settlement limited nominal bearing resistance for the specified settlement (typically 1 inch) for various effective footing widths likely to be used for the service limit state, and resistance factors for each limit state. The amount of settlement on which qserv is based shall be stated. The geotechnical designer also provides embedment depth requirements or footing elevations to obtain the recommended bearing resistance.

To evaluate sliding stability and eccentricity, the geotechnical designer provides resistance factors for both the strength and extreme event limit states for calculating the shear and passive resistance in sliding, as well as the soil parameters ϕ, K_p, γ and depth of soil in front of footing to ignore in calculating the passive resistance, and ϕ, K_a, γ, K_{ae}, and the earth pressure distributions to use for the strength and extreme event (seismic) limit states for calculating active force behind the footing (abutments only – see Section 23.2.3.4 on walls).

To evaluate soil response and development of forces in foundations for the extreme event limit state, the geotechnical designer provides the foundation soil/rock shear modulus values and Poissons ratio (G and μ).

The geotechnical designer evaluates overall stability and provides the maximum (unfactored) footing load which can be applied to the design slope and still maintain an acceptable safety factor (1.5 for the strength and 1.1 for the extreme event limit states, which is the inverse of the resistance factor). A uniform bearing stress as calculated by the Meyerhof method should be assumed for this analysis. An example presentation of the LRFD footing design recommendations to be provided by the geotechnical designer is as shown in Tables 23-2 and 23-3, and Figure 23-1. See Section 23.2.3.4 for examples of the additional information submitted for abutment wall design.

Parameter	Abutment Piers	Interior Piers
Soil Unit Weight, γ (soil above footing base level)	X	X
Soil Friction Angle, φ (soil above footing base level)	X	X
Active Earth Pressure Coefficient, K_a	X	X
Passive Earth Pressure Coefficient, K_p	X	X
Seismic Earth Pressure Coefficient, K_{ae}	X	
Coefficient of Sliding, Tan δ	X	X

Example Presentation of Soil Design Parameters for Sliding and Eccentricity Calculations
Table 23-2

	Resistance Factor, φ		
Limit State	Bearing	Shear Resistance to Sliding	Passive Pressure Resistance to Sliding
Strength	X	X	X
Service	X	X	X
Extreme Event	X	X	X

Example Presentation of Resistance Factors for Footing Design
Table 23-3

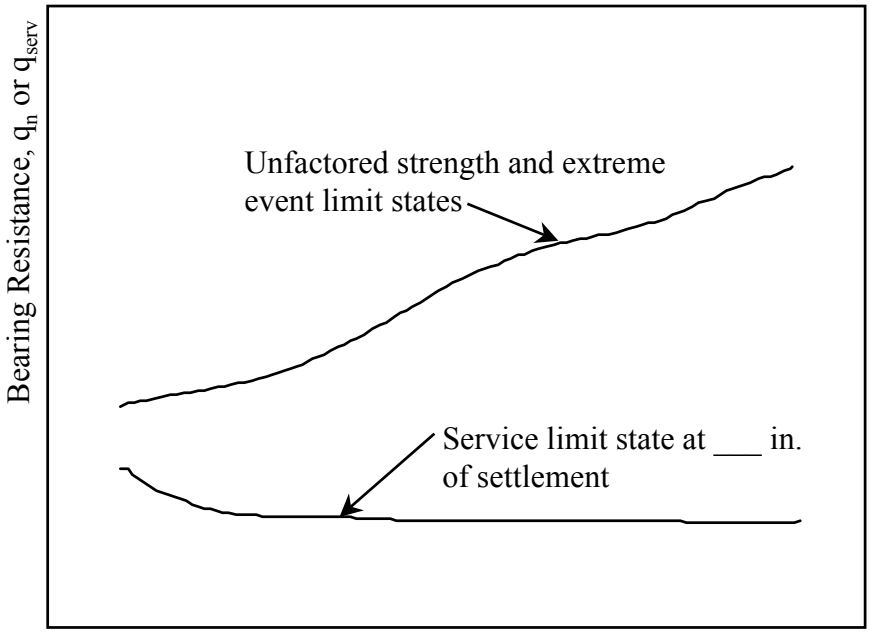

Example Presentation of Bearing Resistance Recommendations
Figure 23-1

23.3.3.2 Drilled Shafts

To evaluate bearing resistance, the geotechnical designer provides as a function of depth and at various shaft diameters the unfactored nominal (ultimate) bearing resistance for end bearing, R_p, and side friction, R_s, used to calculate R_n, for strength and extreme event limit state calculations (see example figures below). For the service limit state, the unfactored bearing resistance at a specified settlement, typically 0.5 or 1.0 inch (mobilized end bearing and mobilized side friction) should be provided as a function of depth and shaft diameter. See Figure 23-2 for an example of the shaft bearing resistance information that would be provided. Resistance factors for bearing resistance for all limit states will also be provided, as illustrated in Table 23-4.

If downdrag is an issue, the ultimate downdrag load, DD, as a function of shaft diameter will be provided, as well as the depth zone of the shaft that is affected by downdrag, the downdrag load factor, and the cause of the downdrag (settlement due to vertical stress increase, liquefaction, etc.). If liquefaction occurs, the lost side friction resistance, RSdd, due to downdrag will be provided (see Chapter 8, Figure 8-31).

If scour is an issue, the magnitude and depth of the skin friction lost due to scour, Rscour, will also be provided (see Chapter 8, Figure 8-30).

	Resistance Factor, φ		
Limit State	Skin Friction	End bearing	Uplift
Strength	X	X	X
Service	X	X	X
Extreme Event	X	X	X

Example Presentation of Resistance Factors for Shaft Design
Table 23-4

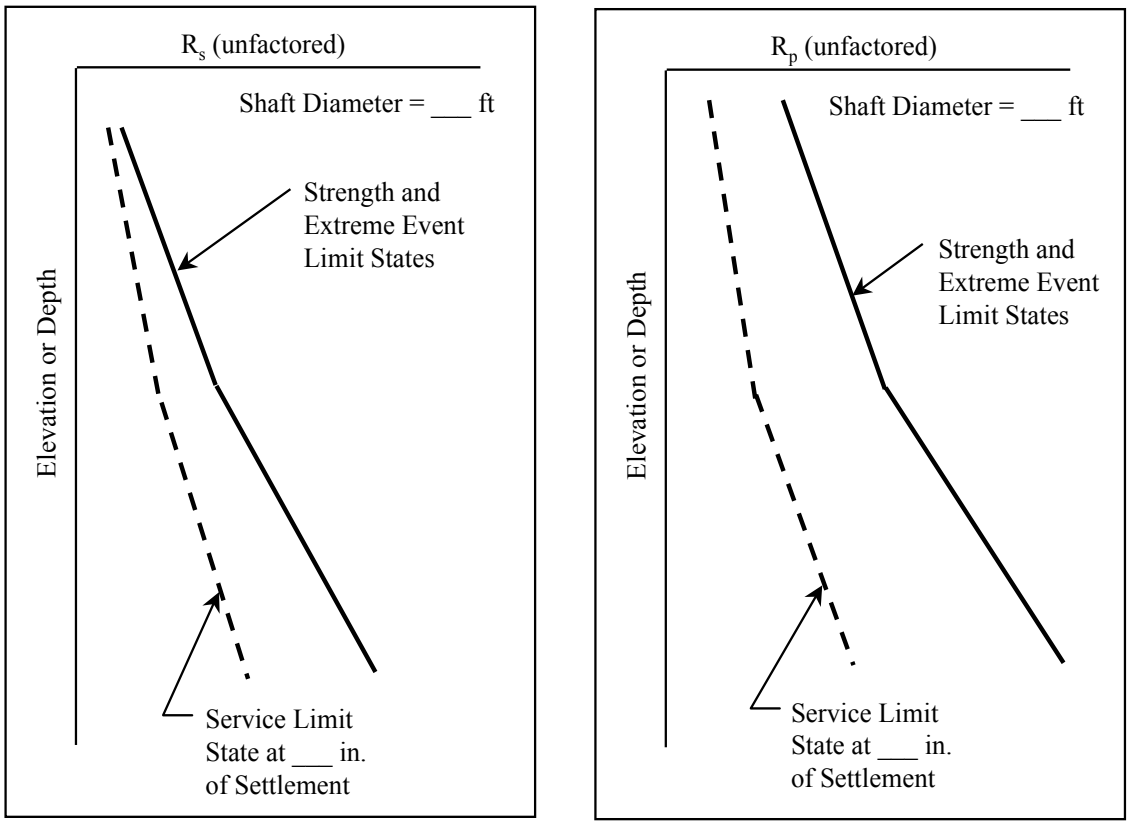

Typical Shaft Bearing Resistance Plots (All Limit States)
Figure 23-2

If lateral loads imposed by special soil loading conditions such as landslide forces are present, the nominal (ultimate) lateral soil force or stress distribution, and the load factors to be applied to that force or stress, will be provided.

For evaluating uplift, the geotechnical designer provides, as a function of depth, the nominal (ultimate) uplift resistance, R_n. The skin friction lost due to scour or liquefaction to be applied to the uplift resistance curves should be provided (separately, in tabular form). Resistance factors are also be provided.

The geotechnical designer also provides group reduction factors for bearing resistance and uplift if necessary, as well as the associated resistance factors.

The geotechnical designer also provides soil/rock input data for P-y curve generation or as input for conducting strain wedge analyses (e.g., the computer program S-Shaft) as a function of depth. Resistance factors for lateral load analysis generally do not need to be provided, as the lateral load resistance factors will typically be 1.0.

23.3.3.3 Piles

To evaluate pile resistance, the geotechnical designer provides information regarding pile resistance using one of the following two approaches:

1. A plot of the unfactored nominal (ultimate) bearing resistance (Rn) as a function of depth for various pile types and sizes for strength and extreme event limit state calculations are provided. This design data would be used to determine the feasible ultimate pile resistance and the estimated depth for pile quantity determination. See Figure 23-3 for example of pile data presentation.
2. Only R_n and the estimated depth at which it could be obtained are provided for one or more selected pile types and sizes.

Resistance factors for bearing resistance for all limit states will also be provided (see Table 23-5 for an example).

If downdrag is an issue, the ultimate downdrag load, DD, as a function of pile diameter should be provided, as well as the depth zone of the pile that is affected by downdrag, the downdrag load factor, and the cause of the downdrag (settlement due to vertical stress increase, liquefaction, etc.). If liquefaction occurs, the lost side friction resistance, RSdd, due to downdrag should be provided (see Chapter 8, Figure 8-31).

If scour is an issue, the magnitude and depth of the skin friction lost due to scour, Rscour, should also be provided (see Chapter 8, Figure 8-30).

If lateral loads imposed by special soil loading conditions such as landslide forces are present, the ultimate lateral soil force or stress distribution, and the load factors to be applied to that force or stress, shall be be provided.

For evaluating uplift, the geotechnical designer shall provide, as a function of depth, the nominal (unfactored) uplift resistance, Rn. This is usually be provided as a function of depth, or as a single value for a given minimum tip elevation, depending on the project needs. The skin friction lost due to scour or liquefaction to be applied to the uplift resistance curves shall also be provided (separately, in tabular form). Resistance factors shall be also be provided for strength and extreme event limit states.

The geotechnical designer shall also provide group reduction factors for bearing resistance and uplift if necessary, as well as the associated resistance factors.

The geotechnical designer shall provide P-Y curve data as a function of depth. Resistance factors for lateral load analysis do not need to be provided, as the lateral load resistance factors will typically be 1.0.

Minimum tip elevations for the pile foundations shall be provided as appropriate. Minimum tip elevations shall be based on pile foundation settlement, and, if uplift loads are available, the depth required to provide adequate uplift resistance (see Section 8.12.6). Minimum pile tip elevations provided in the Geotechnical Report may need to be adjusted depending on the results of the lateral load and uplift load evaluation performed by the structural designer. If adjustment in the minimum tip elevations is necessary, or if the pile diameter needed is different than what was assumed by the geotechnical designer for pile resistance design, the geotechnical designer should be informed so that pile drivability, as discussed below, can be re-evaluated.

Pile drivability shall be evaluated at least conceptually for each project, and if appropriate, a wave equation analysis performed and the results of the analysis provided in terms of special requirements for hammer size and pile wall thickness, etc. The maximum driving resistance required to reach the minimum tip elevation shall also be provided.

	Resistance Factor, φ	
Limit State	**Bearing Resistance**	**Uplift**
Strength	x	x
Service	x	x
Extreme Event	x	x

Example Presentation of Resistance Factors for Pile Design
Table 23-5

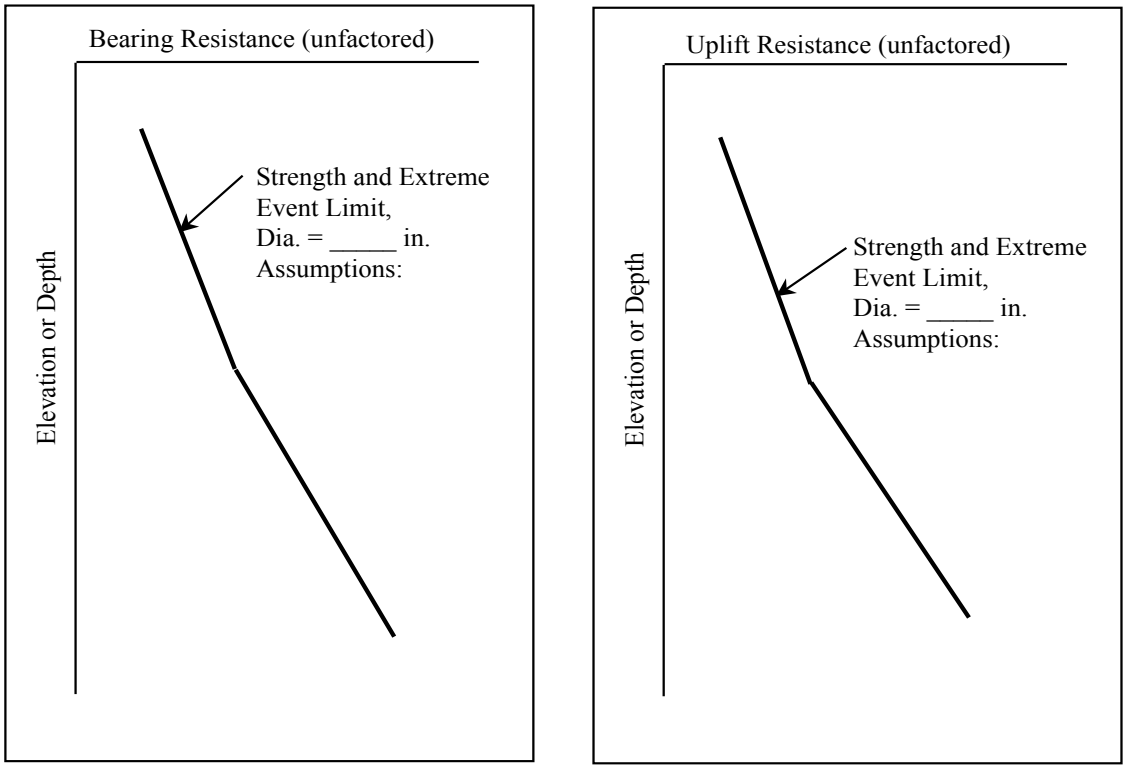

Example Presentation of Pile Bearing Resistance and Uplift
Figure 23-3

23.3.3.4 Retaining Walls

To evaluate bearing resistance for footing supported gravity walls, the geotechnical designer provides qn, the unfactored nominal (ultimate) bearing resistance available, and qserv, the settlement limited bearing resistance for the specified settlement for various effective footing widths (i.e., reinforcement length plus facing width for MSE walls) likely to be used, and resistance factors for each limit state. The amount of settlement on which qserv is based shall be stated. The geotechnical designer also provides wall base embedment depth requirements or footing elevations to obtain the recommended bearing resistance.

To evaluate sliding stability, bearing, and eccentricity of gravity walls, the geotechnical designer provides resistance factors for both the strength and extreme event limit states for calculating the shear and passive resistance in sliding. In addition, the geotechnical designer provides the soil parameters ϕ, K_p, and γ, the depth of soil in front of the footing to ignore when calculating passive resistance, the soil parameters ϕ, K_a, and γ used to calculate active force behind the wall, the seismic earth pressure coefficient Kae (see Section 15.4.2.9), the peak ground acceleration (PGA) used to calculate seismic earth pressures, and separate earth pressure diagrams for strength and extreme event (seismic) limit state calculations that include all applicable earth pressures, with the exception of traffic barrier impact loads (traffic barrier impact loads are developed by the structural designer). The geotechnical designer shall also indicate in the report whether or not the wall was assumed to be free to move during seismic loading (e.g., was 0.5xPGA or 1.0.xPGA used to determine K_{ae}).

The geotechnical designer shall evaluate overall stability and provide the minimum footing or reinforcement length required to maintain an acceptable safety factor, if overall stability controls the wall width required. An example presentation of the LRFD wall design recommendations to be provided by the geotechnical designer is as shown in tables 23-6 and 23-7, and figures 23-4 and 23-5.

Parameter	Value
Soil Unit Weight, γ (soil above wall footing base level)	X
Soil Friction Angle, φ (soil above wall footing base level)	X
Active Earth Pressure Coefficient, K_a	X
Passive Earth Pressure Coefficient, K_p	X
Seismic Earth Pressure Coefficient, K_{ae}	X
Coefficient of Sliding, Tan δ	X

Example Presentation of Soil Design Parameters for Sliding and Eccentricity Calculations for Gravity Walls
Table 23-6

	Resistance Factor, φ		
Limit State	**Bearing**	**Shear Resistance to Sliding**	**Passive Pressure Resistance to Sliding**
Strength	X	X	X
Service	X	X	X
Extreme Event	X	X	X

Example Presentation of Resistance Factors for Wall Design
Table 23-7

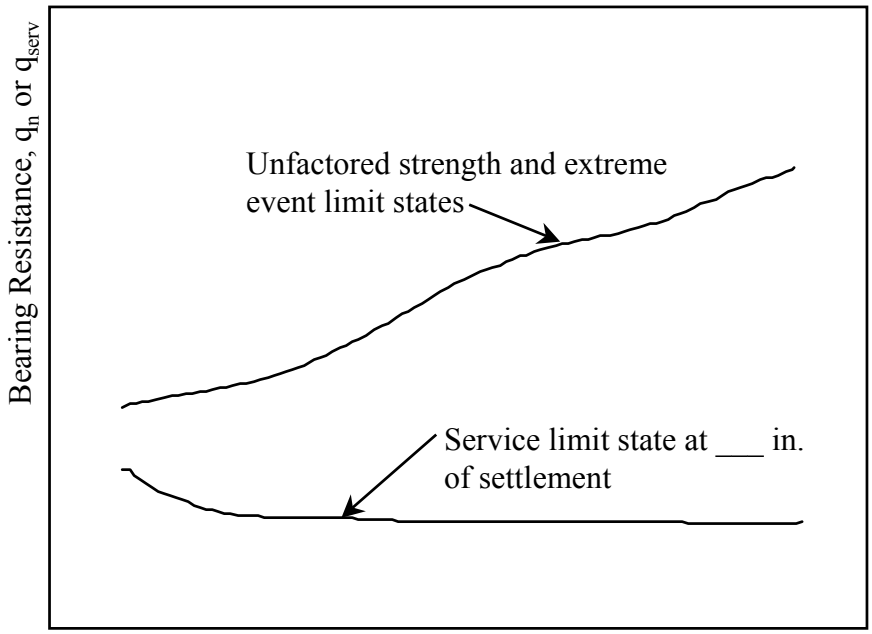

Example Presentation of Bearing Resistance R Ecommendations for Gravity Walls
Figure 23-4

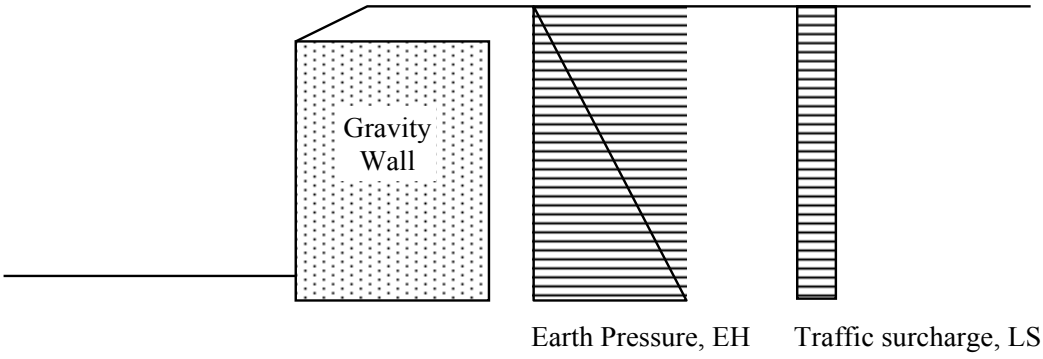

(a) Strength limit state earth pressures

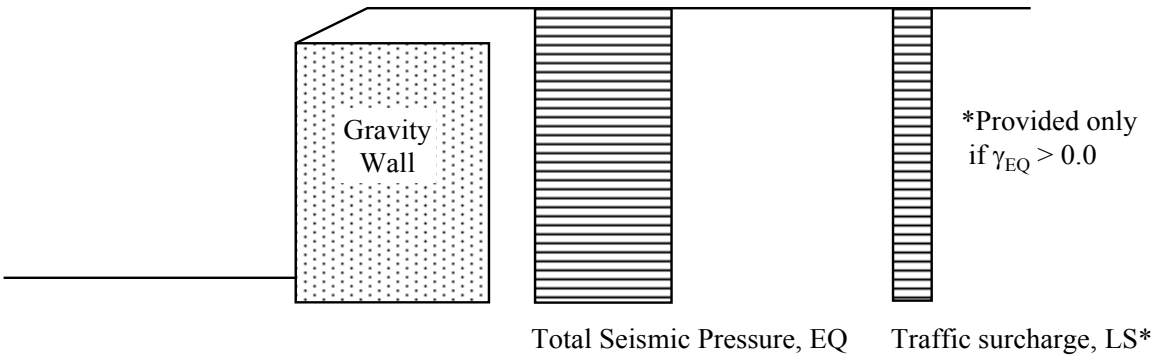

(b) Extreme Event I limit state earth pressures

Example Presentation of Lateral Earth Pressures for Gravity Wall Design
Figure 23-5

For non-proprietary MSE walls, the spacing, strength, and length of soil reinforcement should also be provided, as well as the applicable resistance factors.

For non-gravity cantilever walls and anchored walls, ultimate bearing resistance of the soldier piles or drilled shafts as a function of depth (see Section 23.2.3.2, and Figure 23-2), the lateral earth pressure distribution (active and passive), the minimum embedment depth required for overall stability, and the no load zone dimensions, ultimate anchor resistance for anchored walls, and the associated resistance factors shall be provided. Table 23-7 and Figure 23-6 provide an example presentation of earth pressure diagrams for nongravity cantilever and anchored walls to be provided by the geotechnical designer. Note that for the Extreme Event I Limit State (seismic) for anchored walls, the shape of the lateral earth pressure distribution is the same as the Strength Limit State distribution (see AASHTO Article A11.3). Therefore, the active lateral earth pressure for seismic loading for anchored walls may not be triangular as shown in the figure.

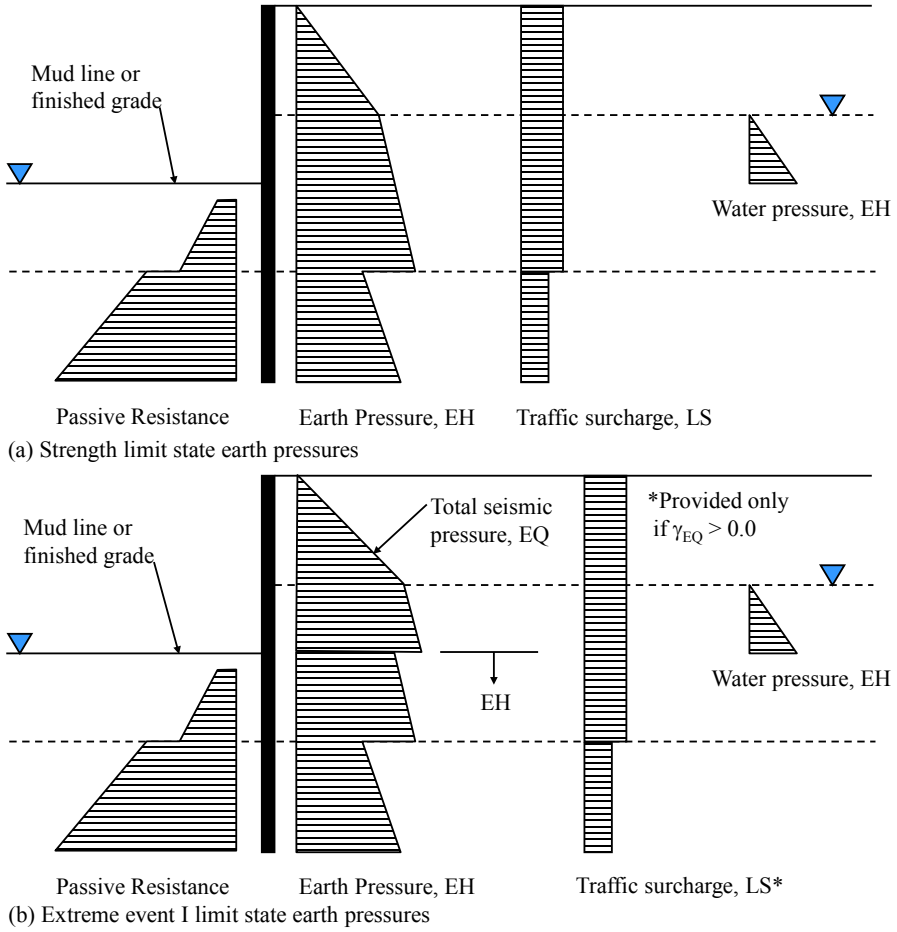

Example presentation of lateral earth pressures for non-gravity cantilever and anchored wall design.
Figure 23-6

23.4 Information to Be Provided in the Geotechnical Design File

Documentation that provides details of the basis of recommendations made in the geotechnical report or memorandum is critical not only for review by senior staff, but also for addressing future questions that may come up regarding the basis of the design, to address changes that may occur after the geotechnical design is completed, to address questions regarding the design during construction to address problems or claims, and for background for developing future projects in the same location, such as bridge or fill widenings. Since the engineer who does the original design may not necessarily be the one who deals with any of these future activities, the documentation must be clear and concise, and easy and logical to follow. Anyone who must look at the calculations and related documentation should not have to go to the original designer to understand what was done.

The project documentation should be consistent with FHWA guidelines, as mentioned at the beginning of this chapter, and shall be consistent with the requirements specified in this GDM. Details regarding what this project documentation should contain are provided in the sections that follow.

23.4.1 Documentation for Conceptual Level Geotechnical Design

Document sources of information (including the date) used for the conceptual evaluation. Typical sources include final records, as-built bridge or other structure layouts, existing test hole logs, geologic maps, previous or current geologic reconnaissance results, etc.

If a geologic reconnaissance was or is conducted, the details of that review, including any photos taken that are necessary to illustrate the conditions observed shall be included in this documentation. For structures, provide a description of the foundation support used for the existing structure, including design bearing capacity, if known, and any foundation capacity records such as pile driving logs, load test results, etc. From the final contract records, summarize any known construction problems encountered when building the existing structure. Examples include over-excavation depth and extent, and why it was needed, seepage observed in cuts and excavations, dewatering problems, difficult digging, including obstructions encountered during excavation, obstructions encountered during foundation installation (e.g., for piles or shafts), slope instability during construction, changed conditions or change orders involving the geotechnical features of the project, and anything else that would affect the geotechnical aspects of the project.

For any geotechnical recommendations made, summarize the logic and justification for those recommendations. If the recommendations are based on geotechnical engineering experience and judgment, describe what specific information led to the recommendation(s) made.

23.4.2 Documentation for Final Geotechnical Design

In addition to the information described in Section 23.4.1, the following information shall be documented in the project geotechnical file (or design calculation package submitted by a consultant, contractor, or design builder for WSDOT review as specified in Section 23.5):

1. List or describe all given information and assumptions used, as well as the source of that information. For all calculations, an idealized design cross-section that shows the design element (e.g., wall, footing, pile foundation, buttress, etc.) located in context to the existing and proposed ground lines, and the foundation soil/rock shall be provided. This idealized cross-section should show the soil/rock properties used for design, the soil/rock layer descriptions and thicknesses, the water table location, the existing and proposed ground line, and any other pertinent information. An example design cross-section for a deep foundation is shown in Appendix 23-B. For slope stability, the soil/rock properties used for the design should be shown (handwritten, if necessary) on the computer generated output cross-section.

2. Additional information and/or a narrative shall also be provided which describes the basis for the design soil/rock properties used. The additional details and requirements in Chapter 5 as well as other GDM chapters, applicable to the specific situation, regarding assessment and determination of geotechnical design parameters shall be followed when developing and documenting justification of the selected design parameters. If the properties are from laboratory tests, state where the test results, and the analysis of those test results, can be found in the final geotechnical design documentation and how those test results apply to the specific site conditions and strata encountered, including consideration of site geological history. If using correlations to SPT or cone data, or other measurements, state which correlations were used, the range of applicability of the correlation to the available measurements, the potential uncertainty in the estimated property value due to the use of that correlation, and any corrections to the data made. If using back-analysis based on measurable performance of geotechnical features at the site or near the site in similar geologic conditions and stratigraphy, provide the complete analyses and any assumptions used that are necessary to reduce the number of degrees of freedom in the design model used. When more than one of these approaches to defining design parameters is available and used, the consistency of the results shall be assessed, and the logic used to make the final selection of design parameters obtained from these analyses shall be provided in the documentation. The uncertainty in the design parameters shall also be considered when selecting geotechnical parameters for design. How this uncertainty is addressed shall be documented (e.g., conservative selection of the design parameters or increased overall level of safety used in the design, or both).

3. Identify what is to be determined from these calculations (i.e., what is the objective?). For example, objectives could include foundation bearing resistance, foundation or fill settlement (differential and total), time rate of settlement, the cut or fill slope required, the size of the stabilizing berm required, etc.

4. The design method(s) used shall also be clearly identified for each set of calculations, including any assumptions used to simplify the calculations, if that was done, or to determine input values for variables in the design equation. Write down equation(s) used and meaning of terms used in equation(s), or reference where equation(s) used and/or meaning of terms were obtained. Attach a copy of all curves or tables used in making the calculations and their source, or appropriately reference those tables or figures. Write down or summarize all steps needed to solve the equations and to obtain the desired solution.

5. Identify the load and resistance factors, or safety factors, used for the design. If it is necessary to diverge from the level of safety requirements in the GDM and referenced manuals (e.g., AASHTO), subject to the approval of the State Geotechnical Engineer, identify, and provide justification for, the level of safety used for the design (e.g., load and resistance factors, or safety factors), considering the bias and uncertainty in the design method(s) used, and the uncertainty in the geotechnical design parameters selected for the design.
6. If using computer spreadsheets, provide detailed calculations for one example to demonstrate the basis of the spreadsheet and that the spreadsheet is providing accurate results. Hand calculations are not required for well proven, well documented, and stable programs such as XSTABL or the wave equation. Detailed example calculations that illustrate the basis of the spreadsheet are important for engineering review purposes and for future reference if someone needs to get into the calculations at some time in the future. A computer spreadsheet in itself is not a substitute for that information.
7. Highlight the solutions that form the basis of the engineering recommendations to be found in the project geotechnical report so that they are easy to find. Be sure to write down which locations or piers where the calculations and their results are applicable.
8. Provide a results summary, including a sketch of the final design, if appropriate.

Each set of calculations shall be signed and dated, and the reviewer shall also sign and date the calculations. The name of the designer and reviewer shall also be printed below the signature, to clearly identify these individuals, if their names do not appear on the seals. Calculations and documents shall be sealed in accordance with State Law. Consecutive page numbers should be provided for each set of calculations, and the calculation page numbers for which the stamps and signatures are applicable should be indicated below or beside the stamps.

These requirements also apply to preliminary designs or portions of a project geotechnical design submitted for specific project elements.

23.4.3 Geotechnical File Contents

The geotechnical project file(s) should contain the information necessary for future users of the file to understand the historical geotechnical data available, the scope of the project, the dimensions and locations of the project features understood at the time the geotechnical design was completed, the geotechnical investigation plan and the logic used to develop that plan, the relationship of that plan to what was requested by the Region, Bridge Office, Urban Corridors Office, Washington State Ferries Office, or other office, the geotechnical design conducted, what was recommended, and when and to whom it was recommended. Two types of project files should be maintained: the geotechnical design file(s), and the construction support file(s).

The geotechnical design file should contain the following information (in addition to the final geotechnical report):

- Historical project geotechnical and as-built data (see Section 23.3.1)
- Geotechnical investigation plan development documents
- Geologic reconnaissance results

- Critical end area plots, cross-sections, structure layouts, etc., that demonstrate the scope of the project and project feature geometry as understood at the time of the final design, if such data is not contained in the geotechnical report
- Information that illustrates design constraints, such as right-of-way location, location of critical utilities, location and type of adjacent facilities that could be affected by the design, etc.
- Boring log field notes
- Boring logs
- Lab transmittals
- Lab data, including rock core photos and records
- Field instrumentation measurements
- Final calculations only, unless preliminary calculations are needed to show design development
- Final wave equation runs for pile foundation constructability evaluation
- Key photos (must be identified as to the subject and locations), including CD with photo files
- Key correspondence (including e-mail) that tracks the development of the project – this does not include correspondence that is focused on coordination activities

The geotechnical construction file should contain the following information:

- Change order correspondence and calculations
- Claim correspondence and data
- Construction submittal reviews (retain temporarily only, until it is clear that there will be no construction claims)
- Photos (must be identified as to the subject and locations), including CD with photo files
- CAPWAP reports
- Final wave equation runs and pile driving criteria development
- CSL reports

23.5 Consultant Geotechnical Reports and Documentation Produced on Behalf of WSDOT

Geotechnical reports and documentation produced by geotechnical consultants, including geotechnical work conducted in support of Cost Reduction Incentive proposals (CRIP's), shoring submittals, and design-build projects, shall be subject to the same reporting and documentation requirements as those produced by WSDOT staff, as described in Sections 23.2 and 23.3. The detailed analyses and/or calculations produced by the consultant in support of the geotechnical report development shall be provided to the State.

23.6 Summary of Geotechnical Conditions

The "Summary of Geotechnical Conditions" is generally a 1 to 2 page document that briefly summarizes the subsurface and ground water conditions for key areas of the project where foundations, cuts, fills, etc., are to be constructed. This document also describes the impact of these subsurface conditions on the construction of these foundations, cuts, fills, etc., to provide a common basis for interpretation of the conditions and bidding. A Summary of Geotechnical Conditions is primarily used for design-bid-build projects, as the Geotechnical Baseline Report (Chapter 22) serves the functions described above for design-build projects.

A Summary of Geotechnical Conditions is mandatory for all projects that contain bridges, walls, tunnels, unstable slope repairs, and significant earth work. The Summary of Geotechnical Conditions should specifically contain the following information:

1. Describe subsurface conditions in plain English. Avoid use of jargon and/or nomenclature that contactors will not understand. Identify depths/thicknesses of the soil or rock strata and their moisture state and density condition. Identify the depth/elevation of groundwater and state its nature (e.g. perched, regional, artesian, etc.). If multiple readings over time were obtained, identify dates and depths measured, or as a minimum provide the range of depths measured and the dates the highest and lowest water level readings were obtained. Also briefly describe the method used to obtain the water level (e.g., open standpipe, sealed piezometer, including what soil/rock unit the piezometer was sealed in, etc.). Refer to the boring logs for detailed information. If referring to an anomalous soil, rock or groundwater condition, refer to boring log designation where the anomaly was encountered. Caution should also be exercised when describing strata depths. If depths/thicknesses are based on only one boring, simply refer to the boring log for that information. Comments regarding the potential for variability in the strata thicknesses may be appropriate here. Also note that detailed soil/rock descriptions are not necessary if those conditions will not impact the contractor's construction activities. For example, for fills or walls placed on footings, detailed information is only needed that would support later discussion in this document regarding the workability of the surficial soils, as well as the potential for settlement or instability and their effect on construction.
2. For each structure, if necessary, state the impact the soil, rock or groundwater condition may (will) have on construction. Where feasible, refer to boring log(s) or data that provide the indication of risk. Be sure to mention the potential of risk for:
   - Caving ground
   - Slope instability due to temporary excavation, or as a result of a project element (e.g. buttress, tieback wall, soil nail cuts)
   - Settlement and its effect on how a particular structure or fill needs to be built
   - Potential geotechnical impact of the construction of some elements on the performance of adjacent elements that are, or are not, a part of the construction contract (e.g., ground improvement performed at the toe of a wall could cause movement of that wall)
   - Groundwater flow and control, if anticipated, in construction excavations

- Dense layers (e.g., may inhibit pile driving, shaft or tunnel excavation, drilling for nails, dowels or anchors)
- Obstructions, including cobbles or boulders, if applicable
- Excavation difficulties due to boulders, highly fractured or intact rock, groundwater, or soft soil.

3. Where design assumptions and parameters can be affected by the manner in which the structure is built, or if the assumptions or parameters can impact the contractor's construction methods, draw attention to these issues. This may include:
   - Soil or rock strengths (e.g. point load tests, RQD, UCS, UU, CU tests, etc.)
   - Whether shafts or piles are predominantly friction or end bearing by design
   - The reasons for minimum tip elevations specified in the contract
   - Downdrag loads and the effects on design/construction
   - If certain construction methods are required or prohibited, state the (geotechnical) reason for the requirement
   - Liquefaction potential and impact on design/construction
4. List of geotechnical reports or information. This should include the project specific report and memoranda (copies at the Project Engineer's office) as well as pertinent reports that may be located elsewhere and may be historical or regional in nature.
5. The intent of the Summary is to inform the contractor of what the geotechnical designers know or strongly suspect about the subsurface conditions. The summary should be brief (1 or 2 pages). It should not include tabulations of all available data (e.g. borehole logs, lab tests, etc.). Only that data that are pertinent to the adverse construction conditions anticipated should be mentioned. It should not include sections or commentary about structures or project elements about which the geotechnical designer has no real concerns. It shall also not be used to provide contract special provision material (i.e., statements that direct the contractor to do something). Such requirements should be included in the contract special provisions instead.

Appendix 23-A PS&E Review Checklist

SR- _____ C.S. _____ Project _____

❒ Region PS&E ❒ Bridge PS&E ❒ Office Copy PS&E

Reviewer _____ Date Reviewed _____

Earth/Rock Work, Materials, and Geotech. Information Disclosure

Item	Applicable?	Comments
Geotech. Reports Listed?		
Test Hole Locations Shown (structures only)?		
Test Hole Logs Provided?		
Materials Source • Source Approval • Reclaimation Plan • Quantities • Disclosure of Geotechnical Data		
Are Materials Specified Appropriate? • Fill • Backfill for Overex. • Wall Backfill		
Waste Sites		
Cut Slopes		
Fill Slopes		
Berm or Shear Key		
Soil Reinforcement • Location • Length • Strength		

Earth/Rock Work, Materials, and Geotech. Information Disclosure, Cont.

Item	Applicable?	Comments
Unsuitable Excavation		
Ground Modification • Wick Drains • Stone Columns • Vibrocompaction, compaction grouting, etc. • Advisory Specifications?		
Settlement Mitigation • Surcharges • Fill Overbuild • Light Weight Fill • Preload Settlement Period		
Rock Cuts and Blasting • Slopes • Special Provisions - Blasting • Rock Reinforcement		
Slope Drainage Features		

Bridges and Tunnels

Item	Applicable?	Comments
Spread Footings • Elevations/Embed. • Bearing Capacity • Seals • Overexcavation Requirements • Soil Densification Requirements • Advisory Specifications?		
Piles • Quantities • Minimum Tip Elevations • Capacity • Pile Type and Size • Hammer Requirements • Special Pile Tips • Special Material Requirements • Pile Spacing • Advisory Specifications?		
Shafts • Tip Elevations • Shaft Diameter • Casing Requirements • Special Location Requirements for Tip • Shaft Spacing • Advisory Specifications?		
Seismic Design • Acceleration Coefficient • Liquefaction Mitigation Requirements • Special Design requirements		
Abutment and Endslope Design		

Retaining Walls

SR- _____ C.S. _____ Project _____

Item	Applicable?	Comments
Wall Number(s)		
Wall Types Allowed		
Facing Types?		
External Stability • Wall Base Embedment or Elevation • Bearing Capacity • Min. Wall Width • Pile Support Requirements • Shaft Support Requirements • Overexcavation or Soil Densification Requirements • Surcharge Conditions are as Assumed? • Slope Below Wall is as Assumed? • Advisory Specifications?		
Internal Stability • Soil Reinforcement Strength and Spacing Requirements • Reinforcement Type • No Load Zone Requirements • Soil Design Parameters		
Wall Drainage Features		
Wall Backfill Type		
Wall Quantities		
Specifications Appropriate for Wall? • Preapproved? • Construction Tolerances?		

Copy This Page to Wall Database Manager

Miscellaneous Structures

Item	Applicable?	Comments
Noise Walls • Type Appropriate? • Foundation Type • Foundation Size and Depth • Bearing Capacity		
Signals/Signs • Foundation Type • Foundation Size and depth		
Pipe Arches/Culverts • Foundation Type • Foundation Depth • Bearing Capacity • Camber Requirements • Construction Staging • Special Details		
Special Utility Considerations		

Instrumentation

Item	Applicable?	Comments
Types		
Locations		
Zones of Influence		
Purpose and Use of Instrumentation is Clear		

Constructability Issues

Item	Applicable?	Comments
Advisory Specs. Provided? • Obstructions? • Special Excavation Problems? • Wet Weather Construction • Caving Conditions? • Ground Water Conditions • Pile Driveability • Dewatering Issues • Rock Excavation Issues • Pit Development Issues • Others		
Construction Sequence		
Temporary Slope/Shoring Requirements		
Fill Placement		
Soil Reinforcement Installation		
Excavation Restrictions for Stability		
Special Pile Driving Requirements and Criteria		

Appendix 23-B Typical Design Cross-Section for a Deep Foundation

The following figure is an example of a design soil cross-section for a deep foundation. This figure illustrates the types of information that should be included in an idealized cross-section to introduce a foundation design calculation. Depending on the nature of the calculation and type of geotechnical feature, other types of information may be needed to clearly convey to the reviewer what data was used and what was assumed for the design.

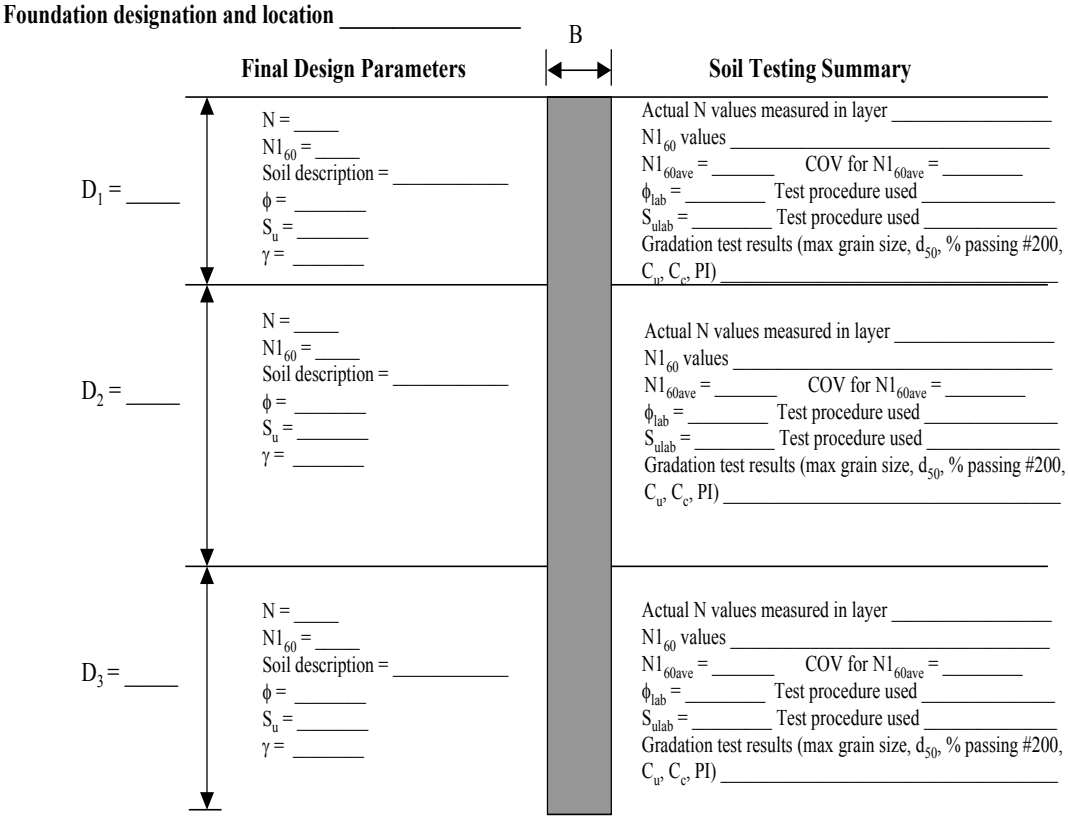

Location of boring(s) relative to shaft location _____
If correlations used to estimate ϕ, S_u, and/or γ, indicate which one(s) were used _____
Method used to correct N for overburden and SPT hammer energy _____
Type of SPT hammer, and measured SPT hammer efficiency, if available _____
Water table depth below ground, including identification/thickness/location of confined water bearing zones = _____
Identify sources of all data included in the form where additional details may be found _____