Chapter 32 Railroad/Highway Crossing Program

32.1 General Discussion

The purpose of this program is to reduce the number of fatalities and injuries at public highway-rail grade crossings through the elimination of hazards and/or the installation/upgrade of protective devices at crossings.

The program focus is on adding protection to crossing projects that demonstrate a need for safety and efficiency.

Funding for this program is discussed in Chapter 12.

ROW Requirements for Railroads are discussed in Chapter 25.

The first alternative to be investigated for improving a grade crossing is closure and/or consolidation with nearby grade crossing. Consolidation will reduce train-vehicle accident potential and maintenance costs. It is also possible that important accessibility may be reduced and unacceptable rerouting of vehicular traffic will result. Nevertheless, when improvement alternatives are considered, these factors should not preclude the consideration of crossing consolidation and the resulting benefits. Removal of crossing surfaces, erection of barriers, and other costs associated with closing a crossing are eligible under this program.

It is the position of the Federal Highway Administration that funding on railroad-highway grade separation projects will only be approved where closure of associated at-grade crossing(s) is imminent. When the grade separation project is opened, the at grade crossing must be closed.

The standards contained in this chapter are to be considered minimum standards for projects. They may be inadequate if extraordinarily hazardous conditions exist. In these cases, higher levels of protection should be provided.

32.2 Selection of Appropriate Warning Devices

References:

Manual on Uniform Traffic Control Devices

Design Manual M 22-01

FHWA Railroad-Highway Grade Crossing Handbook

.21 Passive Protection – These devices include signing and pavement markings. The crossbuck sign is the responsibility of the railroad. All other signs and pavement markings are the responsibility of the local agency and are eligible for reimbursement.

.22 Design Standards for Active Protection – Active grade crossing traffic control devices include all signals, bells, and gates or other devices or methods that inform motorists and pedestrians of the approach or presence of trains, locomotives, or railroad cars on at grade intersections. The majority of the devices are automatically activated by the train. Active protection may be appropriate for those locations which have an exposure factor (trains per day times vehicle ADT) greater than 1,500 or are located on railroad main lines. However, a site specific evaluation of train and vehicle traffic volumes and speeds, rural or urban location, potential danger to a large number of people, sight distance and accident history should be completed before making a decision. The basic active protection device consists of post-mounted flashing lights. Gates should be added when any one of the conditions listed in

Appendix 32.43 exist. Additional cantilevered flashing lights should be provided if any one of the conditions listed in Appendix 32.43 apply. Unless special circumstances exist, all cantilevered installations should include gates. Signal lenses shall be 12 inches in diameter. The design standards are illustrated in Appendix 32.41 and 32.42 and are in addition to those found in the *Manual on Uniform Traffic Control Devices* (MUTCD). MUTCD design standards also apply.

a. **Post-Mounted Signals** – These flashing light signals are normally placed to the right of approaching highway traffic on all roadway approaches to a crossing. The design standards included as appendices to this division show the minimum dimensions for the following cases:

   Appendix 32.41 – Shoulder Section
   Appendix 32.42 – Curb Section

b. **Automatic Gates** – Automatic gates should be added to post-mounted signals when any one of the following conditions is present:

   - Multiple main line railroad tracks.
   - Multiple tracks at or in the vicinity of the crossing which may be occupied by a train or locomotive so as to obscure the visability of another train approaching the crossing.
   - High-speed train operation combined with limited sight distance at either single or multiple track crossings (see Appendix 32.43).
   - A combination of high speeds and moderately high volumes of highway and railroad traffic.
   - Either a high volume of vehicular traffic, high number of train movements, school buses, or trucks carrying hazardous materials, unusually restricted sight distance, continuing accident occurrences, or any combination of these conditions.

   When utilizing gates, the departure side of the crossing is usually left open to allow highway traffic to escape from the crossing.

c. **Cantilevered Signals** – Cantilevered flashing light signals should be added to post-mounted signals and gates when any one of the following conditions is present:

- There are considerable distractions near or beyond the crossing which would compete for the driver's attention.
- Traffic or parking conditions are such that the view of a post-mounted flashing light signal could be blocked.
- The angle of approach to the crossing is acute and post-mounted signals could go undetected.
- The highway has two or more lanes in each direction.
- The highway carries high-speed and high-volume traffic.

Unless special circumstances exist, all cantilevered installations should include gates. The design standards included as appendices to this division show the minimum dimensions for the following cases:

Appendix 32.41 – Shoulder Section
Appendix 32.42 – Curb Section

All crossing sites will be reviewed and recommendations made by a diagnostic team consisting of representatives of the Federal Highway Administration (FHWA), railroad, WUTC, local agency, and the Washington State Department of Transportation (WSDOT)

d. **Traffic Signals at or Near Grade Crossings** – When highway intersection traffic control signals are within 200 feet of a grade crossing, control of the traffic flow should be designed to provide the vehicle operators using the crossing a measure of safety at least equal to that which existed prior to the installation of such signal. Accordingly, design, installation, and operation should be based upon a total systems approach in order that all relevant features may be considered (see MUTCD Section 8C-6).

.23 Traffic Barriers – A railroad signal may be a point hazard warranting the use of a traffic barrier or crash cushion. Traffic barrier and crash cushion guidelines are shown in Section 710 of the *Design Manual* M 22-01. A guardrail should be installed if the speed limit is greater than 35 mph.

.24 Approaches – Funding to improve road approaches for safety purposes may be considered as a part of signalization projects on a case-by-case basis. Approach work for safety improvement includes profile corrections to reduce approach grades at main line locations.

.25 Crossing Surfaces – Funding to improve crossing surfaces may be considered as a part of signalization projects on a case-by-case basis. The street or highway must have an ADT of at least 7,500 in order to be considered.

.26 Illumination – Railroad grade crossings may be considered for illumination where a nighttime accident pattern is known to exist or is likely to occur. These projects will be considered on a case-by-case basis.

32.3 Project Development Process

.31 Project Application Package – A local agency wishing to develop a project to provide protection at a railroad/highway crossing must follow the application process outlined in Chapter 21, including all support information listed in Appendix 21.41.

The railroad should be contacted during the project development process to provide notification of the proposed project and to obtain relevant data on train movements. Nearly all rail trackage in Washington State is operated by the Union Pacific or Burlington Northern Santa Fe. The contact person for these railroads are listed below:

Terrel A. Anderson	Richard W. Wagner
Manager Industry & Public Projects	BNSF Railway Mgr. Public Projects for WA.
9451 Atkinson Street	2454 Occidental Avenue South Ste 2D
Roseville, CA 95747	Seattle, WA 98134
Office: 916-789-5134	Office: 206-625-6152

A list of Short Line Railroad contacts is located on the website located at www.utc.wa.gov/regulatedIndustries/transportation/rail/Pages/RailroadCompanies.aspx

The Region Local Programs Engineer will assist in determining the owner of the trackage and the appropriate contact person if necessary. In completing the Project Application Package, sufficient preliminary engineering funds should be requested to cover the agency's PE costs as well as an additional $3,000 to $5,000 to cover the railroad's costs. The additional dollars for PE work done by the railroad should be shown under "other" on the Local Agency Agreement.

If existing devices are to be removed, the agency will notify the Local Programs Operations Engineer who will determine the salvage rights and values, and determine the railroad's credit to the FHWA, if they are federal property.

.32 Preparation of Project Data – When preliminary engineering funding has been approved, the agency should submit the necessary project data to the railroad along with a notice to proceed. Appendix 32.44 shows a Railroad Project Data Form which provides a railroad with data to prepare an estimate of cost. The data required by the railroad is traffic lane widths, shoulder widths, curbs and sidewalks, angle at which the highway crosses the tracks, and the legal description of the crossing location. The location of any underground and overhead utilities in the area which will be excavated for the signal foundation should also be included.

.33 Railroad Agreement and Petition – Upon completion of the signal layout and design, the local agency will prepare the standard agreement shown in Appendix 32.46 and a petition to the Washington State Utilities and Transportation Commission for installation of the crossing protection as required by RCW 81.53.261. At this time, the railroad will also request construction authorization and the local agency should proceed with the construction authorization process as per Section 32.34. The drawing shall form part of the agreement.

The petition and the agreement will be forwarded to the railroad for execution and returned to the local agency. The local agency will file the petition with the WUTC. The WUTC will review the petition and, if appropriate, issue an order directing installation of the crossing protection.

.34 Construction Administration and Project Closure – Upon receipt of construction authorization, the railroad will order material and proceed with construction. Approximately five to eight months are required to obtain the signal material. The railroad will attempt to coordinate construction with other projects in the area to more effectively utilize crews.

The local agency is responsible for all work associated with a railroad agreement, from date of authorization for the railroad to proceed with the work through final completion of the work, subsequent closing of the agreement, and completion of the final audit.

The local agency is required to document the work performed by the railroad to ensure that the railroad's billing can be verified, thereby leaving an audit trail. This documentation may be performed by random oversight which is defined as on-site reviews two or three times a week while the railroad is working.

The documentation should be a record in the form of a diary and supplemental reports of the work performed by the railroad. This record shall be sufficiently complete to establish a record of the following:

- Number and general type of labor and supervision and number of hours chargeable to the agreement work.
- Number and type of major items of equipment used and number of hours chargeable to the agreement work.
- Description of work accomplished.
- Major items of material installed.
- Major items of material removed and disposition, i.e., salvage, scrap, junk.
- Details concerning any changes or extra work or other conditions affecting the work.

Within 30 days of project completion, the railroad will notify the local agency by letter that construction is completed. The local agency requests final billing from the railroad.

The local agency and the WUTC will be notified when the signals are completed and in operation. The agency should notify the Region Local Programs Engineer when the project is completed and submit any railroad and agency billings.

WSDOT will perform the final inspection and send a 90 day closure letter to the local agency (see Chapter 53).

32.4 Appendices

32.41 Signal Design – Shoulder Section

32.42 Signal Design – Curb Section

32.43 Railroad/Highway Grade Crossing Protection Sight Distance Diagram and Gate Warrant Form

32.44 Railroad Project Data Form

32.45 Type 3 Party Agreement – Example

32.46 Local Agency Railway Agreement

Metric

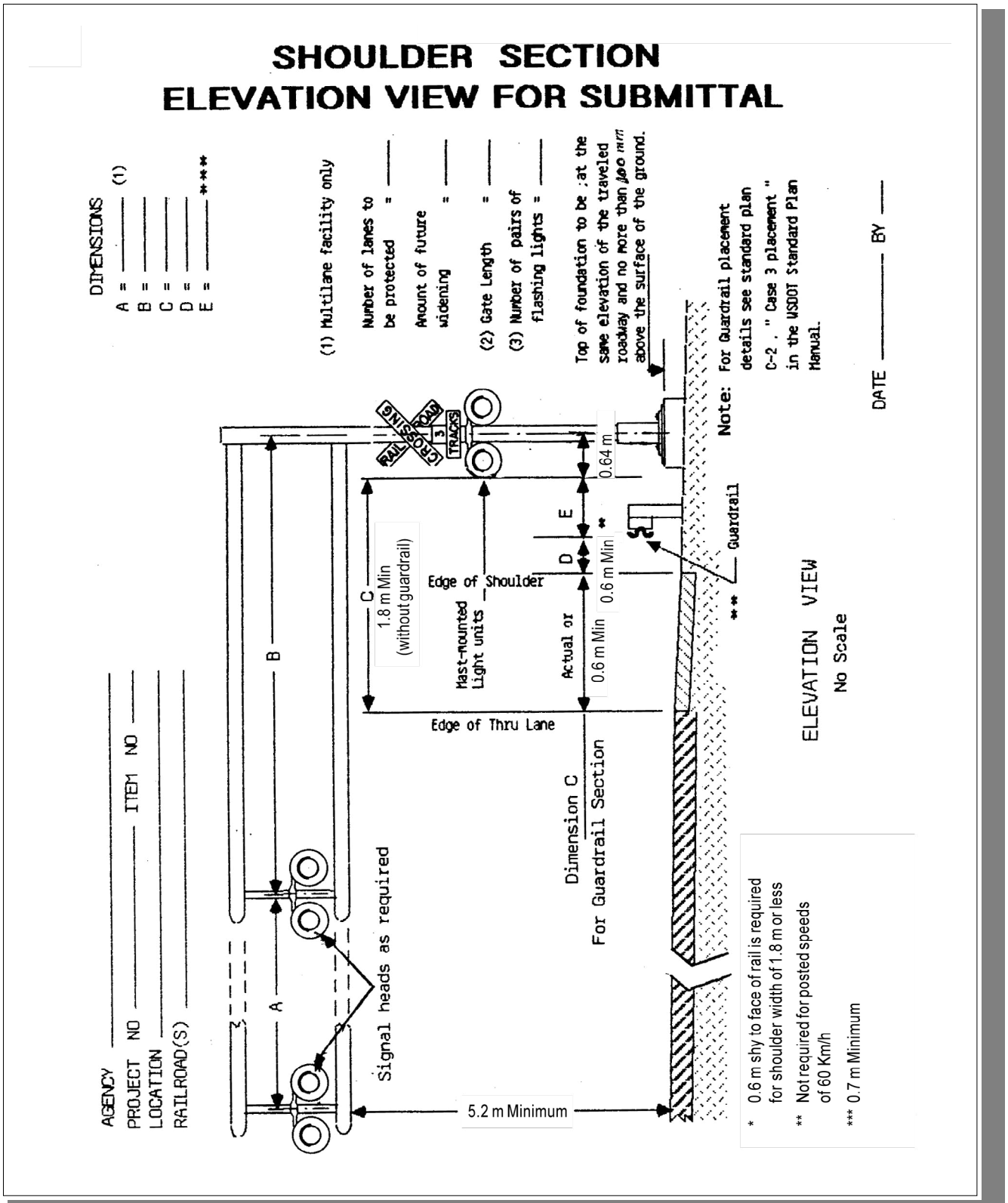
SHOULDER SECTION
ELEVATION VIEW FOR SUBMITTAL
DIMENSIONS
A = _____ (1)
B = _____
C = _____
D = _____
E = _____ ***
(1) Multilane facility only
Number of lanes to be protected = _____
Amount of future widening = _____
(2) Gate Length = _____
(3) Number of pairs of flashing lights = _____
Top of foundation to be at the same elevation of the traveled roadway and no more than 300 mm above the surface of the ground.
Note: For Guardrail placement details see standard plan C-2 , " Case 3 placement " in the WSDOT Standard Plan Manual.
DATE _____ BY _____
AGENCY _____
PROJECT NO _____ ITEM NO _____
LOCATION _____
RAILROAD(S) _____
RAIL ROAD CROSSING
3 TRACKS
0.64 m
E
D
*
0.6 m Min
Guardrail
**
C
1.8 m Min
(without guardrail)
Edge of Shoulder
Mast-mounted Light units
Actual or
0.6 m Min
B
Edge of Thru Lane
Dimension C
For Guardrail Section
ELEVATION VIEW
No Scale
A
Signal heads as required
5.2 m Minimum
* 0.6 m shy to face of rail is required for shoulder width of 1.8 m or less
** Not required for posted speeds of 60 Km/h
*** 0.7 m Minimum

English

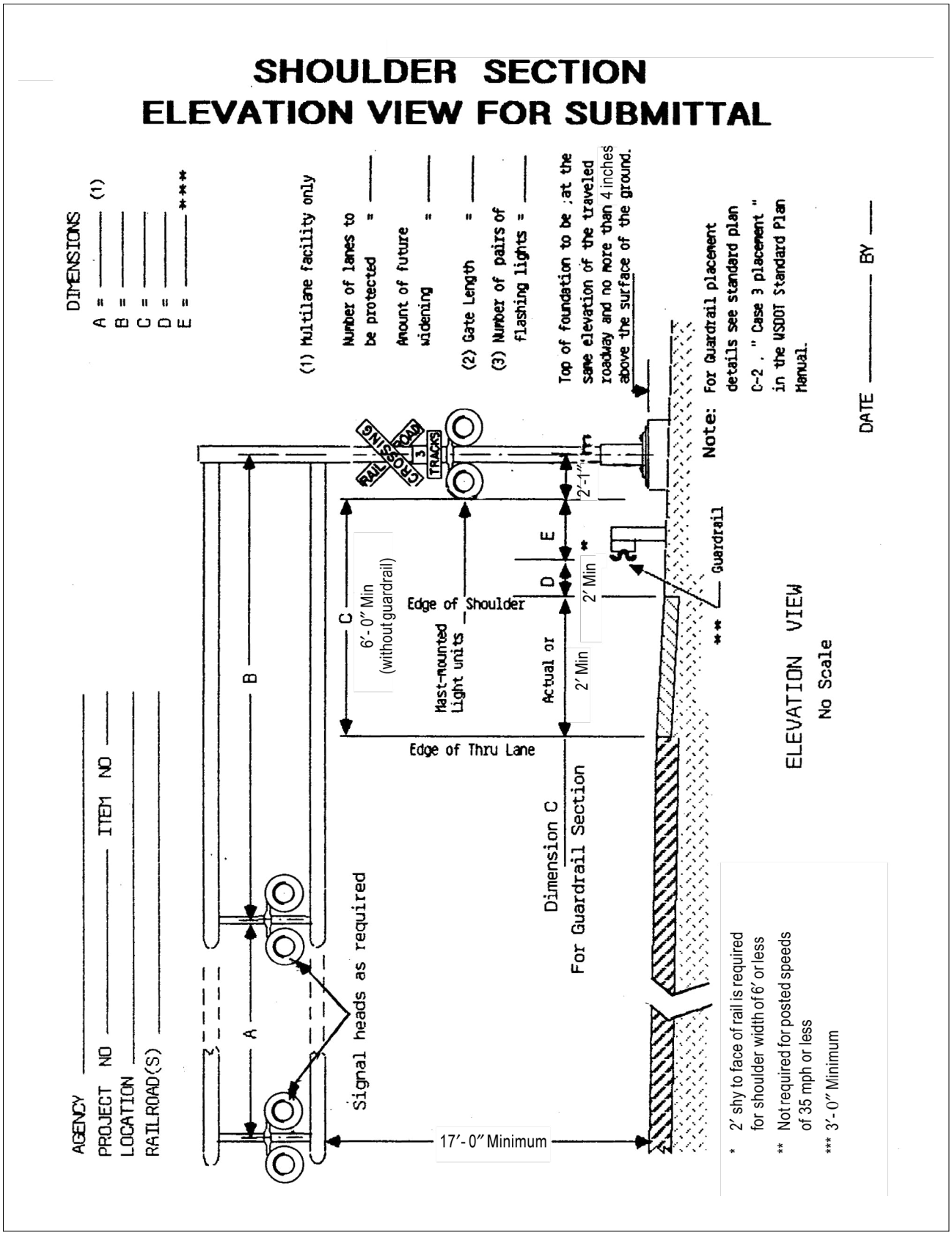
SHOULDER SECTION
ELEVATION VIEW FOR SUBMITTAL
DIMENSIONS
A = _____ (1)
B = _____
C = _____
D = _____
E = _____ ***
(1) Multilane facility only
Number of lanes to be protected = _____
Amount of future widening = _____
(2) Gate Length = _____
(3) Number of pairs of flashing lights = _____
Top of foundation to be at the same elevation of the traveled roadway and no more than 4 inches above the surface of the ground.
Note: For Guardrail placement details see standard plan C-2 , " Case 3 placement " in the WSDOT Standard Plan Manual.
DATE _____ BY _____
RAIL ROAD CROSSING
TRACKS
2'-1"
E
D
2' Min *
Guardrail
**
C
6'-0" Min (without guardrail)
Edge of Shoulder
Mast-mounted Light units
Actual or
2' Min
Edge of Thru Lane
B
A
Dimension C
For Guardrail Section
ELEVATION VIEW
No Scale
Signal heads as required
17'-0" Minimum
AGENCY _____
PROJECT NO _____ ITEM NO _____
LOCATION _____
RAILROAD(S) _____
* 2' shy to face of rail is required for shoulder width of 6' or less
** Not required for posted speeds of 35 mph or less
*** 3'-0" Minimum

Metric

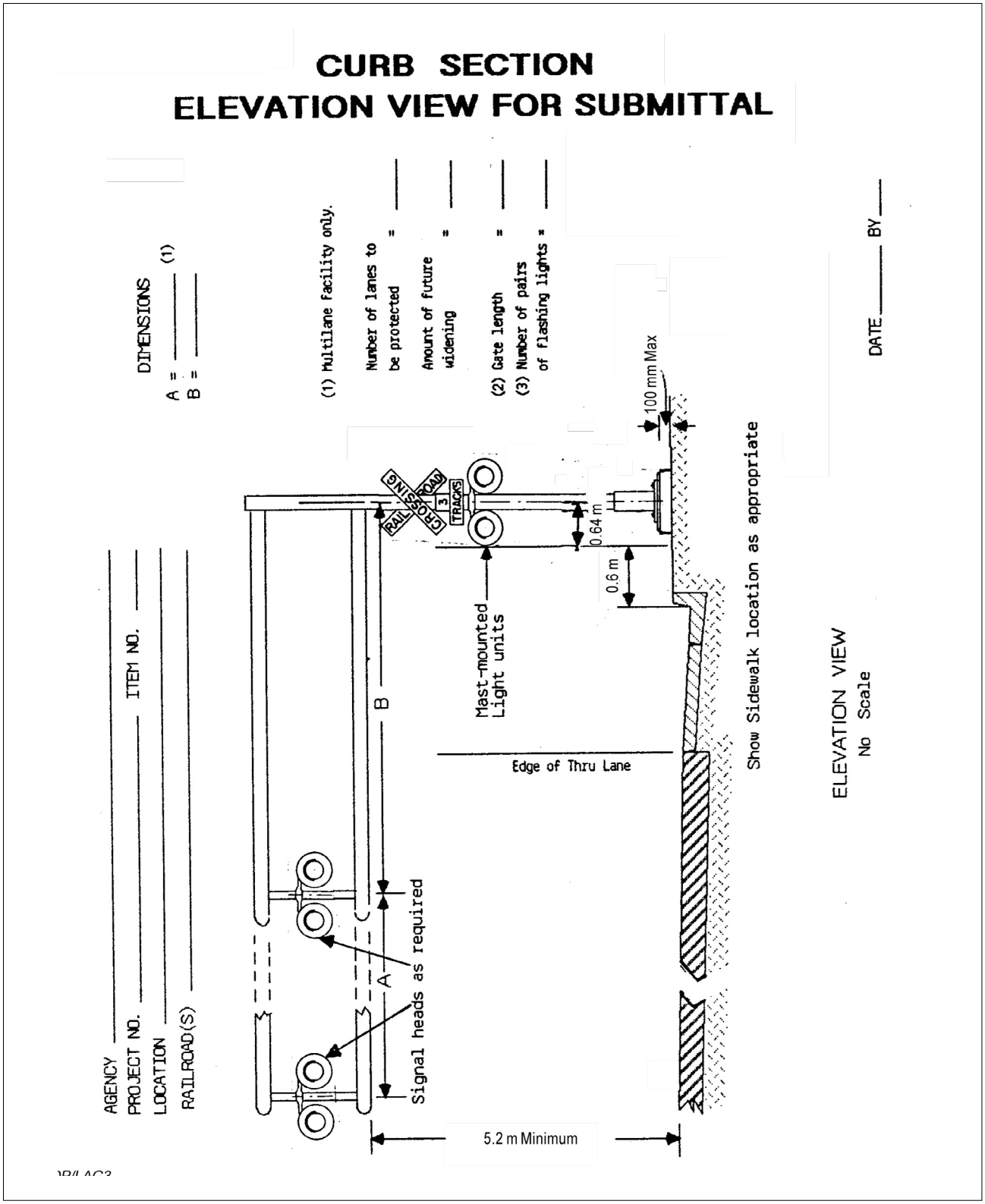
CURB SECTION
ELEVATION VIEW FOR SUBMITTAL
AGENCY
PROJECT NO.
LOCATION
RAILROAD(S)
ITEM NO.
DIMENSIONS
A = (1)
B =
(1) Multilane Facility only.
Number of lanes to be protected =
Amount of future widening =
(2) Gate length =
(3) Number of pairs of flashing lights =
DATE BY
RAIL ROAD CROSSING
3 TRACKS
Signal heads as required
A
B
Mast-mounted Light units
0.64 m
0.6 m
100 mm Max
Edge of Thru Lane
Show Sidewalk location as appropriate
5.2 m Minimum
ELEVATION VIEW
No Scale

English

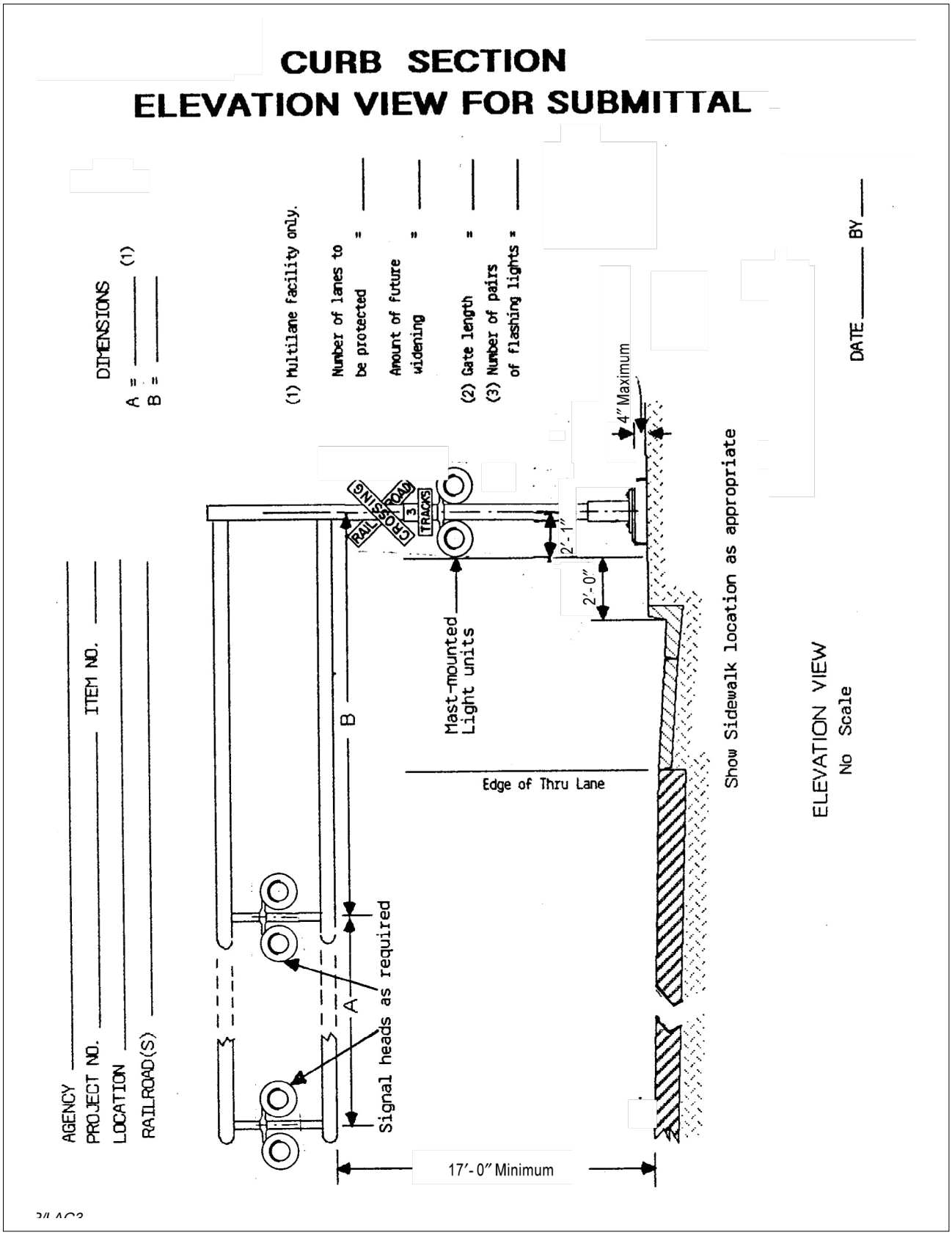
CURB SECTION
ELEVATION VIEW FOR SUBMITTAL
AGENCY
PROJECT NO.
ITEM NO.
LOCATION
RAILROAD(S)
DIMENSIONS
A = (1)
B =
(1) Multilane facility only.
Number of lanes to be protected =
Amount of future widening =
(2) Gate length =
(3) Number of pairs of flashing lights =
DATE BY
RAIL ROAD CROSSING
3 TRACKS
Mast-mounted Light units
Signal heads as required
A
B
2'-1"
2'-0"
4" Maximum
Edge of Thru Lane
Show Sidewalk location as appropriate
17'-0" Minimum
ELEVATION VIEW
No Scale

Appendix 32.43 Railroad/Highway Grade Crossing Protection Sight Distance Diagram and Gate Warrant Form

Metric

Case 1 Departure From Stop		Case 2 Moving Vehicle									
Train Speed (km/h) V_T	0	Vehicle Speed (km/h) Vv									
		20	30	40	50	60	70	80	90	100	110
		f = 0.40	0.40	0.38	0.35	0.33	0.31	0.30	0.30	0.29	0.28
		Distance along railroad from crossing - d_T (meters)									
20	95	50	40	40	40	40	40	45	45	50	50
40	185	100	80	75	75	80	85	85	90	95	100
60	275	145	120	115	115	115	125	130	135	145	155
80	355	195	160	150	150	155	165	170	180	190	205
100	455	240	200	190	190	195	205	215	225	235	255
120	550	290	240	225	225	230	245	255	265	285	305
140	640	335	285	265	260	270	285	300	310	330	355
		Distance along highway from crossing - d_H (meters)									
		25	40	55	70	95	120	150	180	215	255
Required design sight distance for combination of highway and ain vehicle speeds; 19.5 m truck crossing a single set of tracks at 90°.											

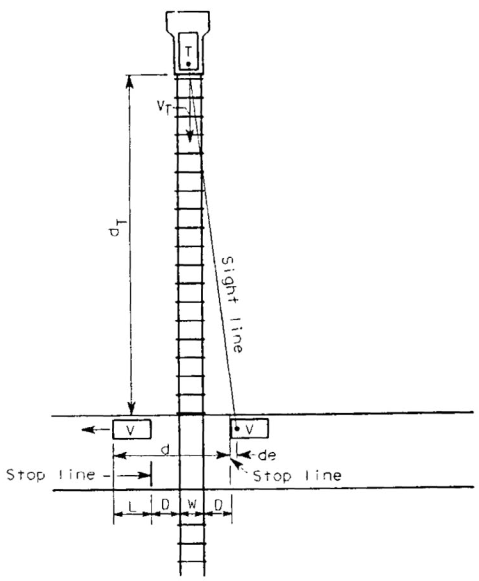

CASE 1
(stopped vehicle)

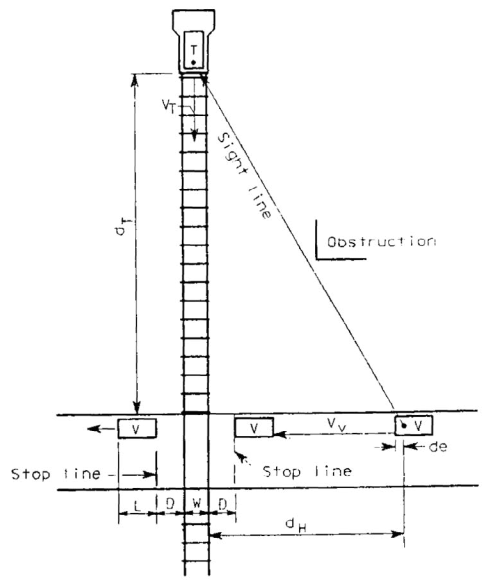

CASE 2
(moving vehicle)

Adjustments must be made for skew crossings.
Assumed flat highway grades adjacent to and at crossings.
W = Distance between outer rails (single track W = 1.5 m)
D = Distance from stop line to nearest rail (assumed 4.5 m)
d_e = Distance from driver to front of vehicle (assumed 3.0 m)

d_H = Sight distance along highway
d_T = Sight distance along railroad tracks
V_V = Velocity of vehicle
f = Coefficient of friction
V_T = Velocity of train
L = Length of vehicle (assumed 19.5 m)

English

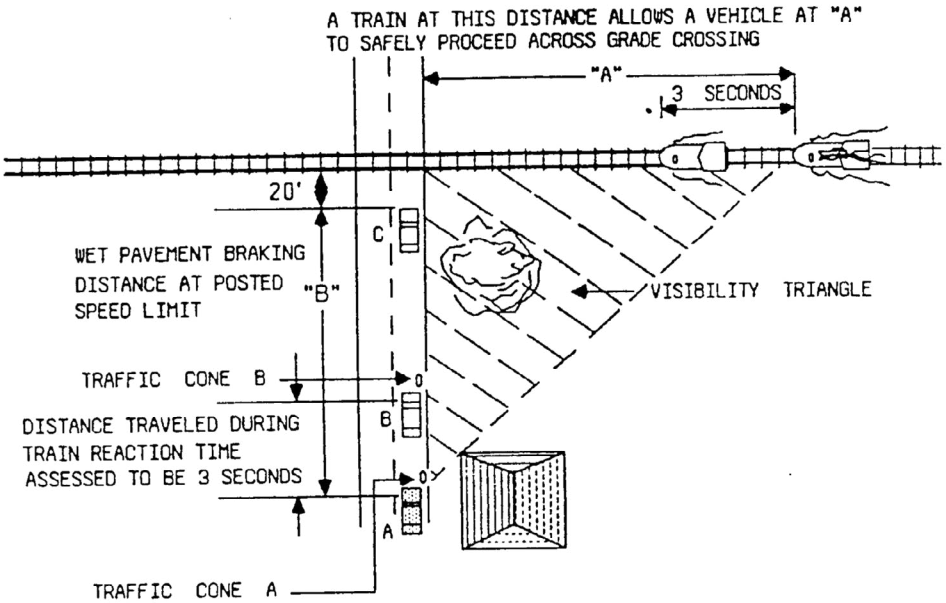

Required Design Sight Distances for Combinations of Highway and Train Vehicle Speeds

Train Speed	Highway Speed in MPH							
	0	10	20	30	40	50	60	70
	Distance Along Railroad from Crossing (“A”)							
10	162	126	94	94	99	107	118	129
20	323	252	188	188	197	214	235	258
30	484	378	281	281	295	321	352	387
40	645	504	376	376	394	428	470	516
50	807	630	470	470	492	534	586	644
60	967	756	562	562	590	642	704	774
70	1,129	882	656	656	684	750	822	904
80	1,290	1,008	752	752	788	856	940	1,032
90	1,450	1,134	844	844	884	964	1,056	1,160
	Distance Along Highway from Crossing (“B”)							
	20	65	125	215	330	470	640	840

Note: 1 mph = 1.61 kph and 1 foot = .304 meters

RAILROAD PROJECT DATA

Furnish Appropriate Information to Railroad With Each Project

1. Agency Name _____
2. Location of Crossing _____
3. Number of Traffic Lanes _____ Railroad Tracks _____
4. Crossing Number Available from Railroad _____
5. Statistics:

	D _____	H _____
A _____	E _____	I _____
B _____	F _____	J _____
C _____	G _____	K _____

Rural ____ or ____ Urban

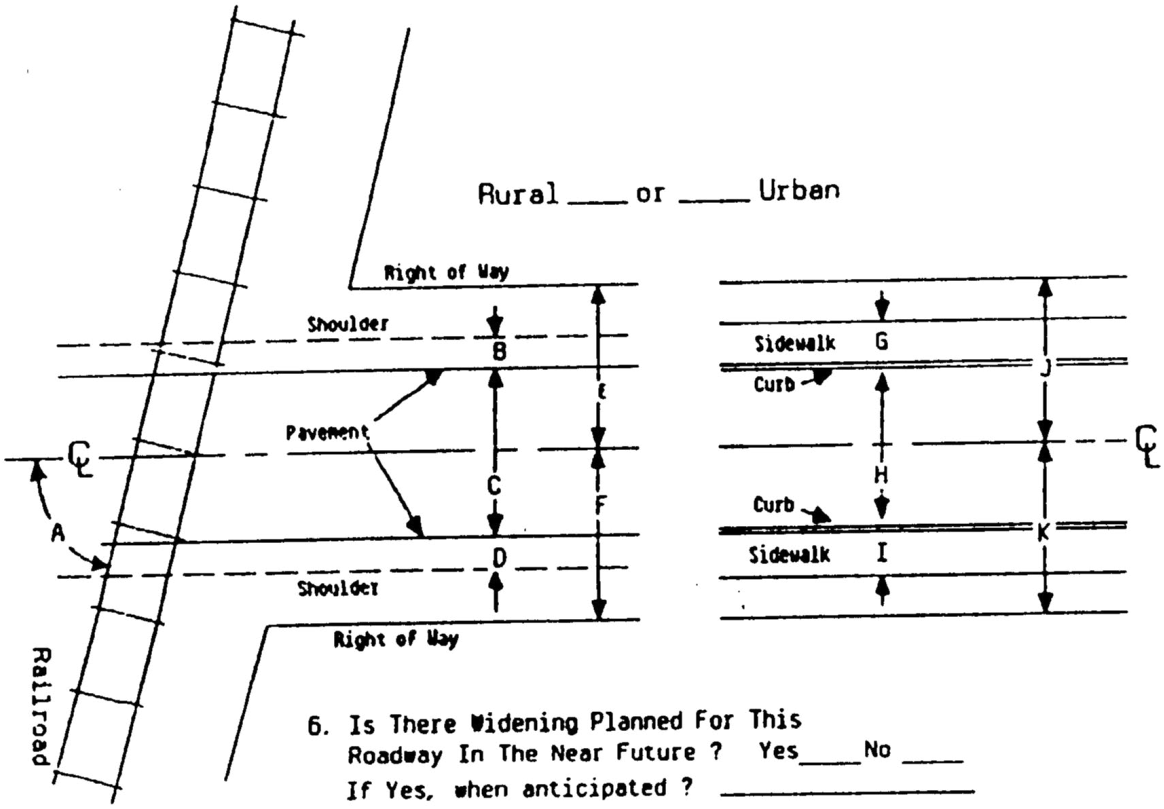

6. Is There Widening Planned For This Roadway In The Near Future ? Yes____ No ____
   If Yes, when anticipated ? _____
   If within 3 years, provide a profile of the proposed approach roadway and show proposed ultimate dimensions on above plan.

Date

Name
Address
City, State, Zip

Agency
Job Title
FA Project Number
Contract

Dear:

This letter is intended as a Memorandum of Understanding between the _____ Railroad, _____ County, and the Washington State Department of Transportation. These three organizations will be referred to in this memorandum as the "Railroad Company," the "County," and the "State," respectively.

Authority for this memorandum is based on an agreement _____, executed by the State on _____. The work described herein and covered by the subject agreements is to be performed under Project Number _____, State Contract No. _____, _____.

It is necessary to provide a method of reimbursement to the Railroad Company for the cost of providing flagging and protective service and devices resulting from the construction operations of the contractor, as set forth in the above noted agreement. Therefore, the following procedures for the submittal and payment of bills for such costs are established:

Flagging costs incurred by the Railroad Company as a result of the operations of the County's contractor shall be at the contractor's expense. The Railroad Company will submit bills for these expenses to the State, the State will pay the bills and deduct such monies paid from the amounts due the contractor on monthly estimates.

Upon completion of the project, the full amount of the estimated flagging costs, as set aside by the State as a part of the Contract Work Order Accounting Plan, less the amount paid to that date, will be retained by the State for a period of 150 calendar days after said completion. After the 150-day period, the State will refund to the contractor the balance of the retained fund, or if the retained funds are insufficient, the contractor will be billed for the additional costs incurred by the Railroad Company.

Your signature and the signature of the appropriate company officer, in the spaces provided, will indicate acceptance of the provisions of this memorandum by your respective agencies.

Sincerely,
Director, Local Programs

cc: Region Local Programs Engineer

Click here to enter text.	Click here to enter text.
Title: City or County	Title: Railroad Company

Washington State Department of Transportation

Local Agency Railway Agreement
Federal Aid Safety Projects
Highway-Railway Grade Crossing Warning Devices

Local Agency _____ Project Number _____

Railway _____ Agreement Number _____

The above parties having complied, or hereby agreeing to comply, with the terms and conditions set forth in (1) Title 23, U.S. Code, Highways, (2) the regulations issued pursuant thereto, and (3) the Policies and Procedures promulgated by the Washington State Department of Transportation, relating to grade crossing warning devices, hereby agree to proceed with the accomplishment and completion of the project hereinafter described.

Project Description

Local Agency Road Name _____

Location _____

Railway Line Name _____

Location _____

Description of Work

The site plan attached hereto as Exhibit C further describes the work.

Construction is estimated to be completed in _____ days, following execution of this agreement and authorization to proceed.

Estimate of Cost

Type of Work	Labor	Non-Labor	Total
1. Install Warning Devices (Type)			0
a. Freight Material Handling			0
b. Equipment Rental			0
c. Expenses			0
d. Salvage			0
e. Other			0
2. Engineering and Accounting			0
3. Liability Insurance			0
4. Labor Surcharge			0
5. Other Work by Railroad* ☐ Yes ☐ No Exhibit A attached hereto			0
6. Total Project Costs	0	0	0

** If detail is required, attached Exhibit A. Insert Exhibit A totals in this line.*

The above parties further stipulate that they agree to and will comply with the provisions set forth in the reverse hereof and made a part of this agreement. Where a franchise or permit exists, the parties shall determine to what extent the franchise or permit is superseded by this agreement. Such determination should be in writing and attached as part of the agreement.

Repair or replacement of damaged or obsolete signals. The cost of repair or replacement of the signals shall be borne on the ratio of _____ percent Local Agency and _____ percent railway.

This agreement shall inure to the benefit of and be binding on the parties hereto, their successors and assigns.

Adopted by Resolution/Ordinance No. _____ Railroad Official _____

Local Agency Official _____ Title _____

Date _____ Date _____

DOT Form 140-044
Revised 03/2010

Page 1 of 3

If the damage to a signal is caused by highway traffic, Local Agency will cooperate with the Railway in determining the location and identification of the parties responsible to the extent of making accident records available.

If said damaged signals cannot, through age, be maintained or require replacement by virtue of the obsolescence, then the cost of replacing the signals shall be negotiated by the Local Agency and the Railway as specified on the front hereof, with such state, federal, or other public funds as may be available at the time such replacement becomes necessary.

VIII. Disposition of Signals No Longer Required

If for any reason, signals shall no longer be required at grade crossing and, in the opinion of the Railway and WSDOT Local Programs, they are not obsolete, the state will take ownership and arrange to have them relocated to some other grade crossing. If said relocation is agreed upon by the WSDOT Local Programs and the Railway, the divisions of cost of such relocation shall be agreed upon between the Local Agency and the Railways prior to such removal. If for any reason the signals shall no longer be required at the grade crossings and in the opinion of the Railway and WSDOT Local Programs the signals are obsolete, the Railway may remove the signals and credit the Local Agency with the value of salvage recovered less cost of removal. The funds credited by the Railway will be reimbursed to the FHWA.

VIII. Relocation Required by Improvement

In the event that either railway or highway improvement will necessitate a rearrangement of relocation or alternation of the existing signals at said crossing, the party whose improvement causes such changes shall bear the entire cost thereof without expense to the other party. The Railway and WSDOT Local Programs will make the decision as to whether the signals or control circuits will be obsolete or inadequate to accommodate an improvement, subject to conformance with the policies and procedures promulgated by the Washington State Department of Transportation relating to grade crossing warning devices.

IX. Nondiscrimination Provision

If the Railway enters into a contract or agreement with a contractor to perform any of the work which the Railway is required to perform under the terms or this agreement, the Railway for itself, its assigns, and successors in interest, agrees that it will not unlawfully discriminate in its choice of contractors and will include all the nondiscrimination provisions set forth in Exhibit B, attached hereto and made a part hereof, in any such contract or agreement.

X. Buy America Requirements

The requirements of 23 C.F.R., section 635.410, “Buy America” apply to this project.

XI. Audit of Federal Aid Project

The Department, if services of a consultant are required, shall be responsible for audit of the consultant’s records to determine eligible federal aid costs on the project. The report of said audit shall be in the Department’s files and made available to the state and the federal government.

An audit shall be conducted by the Department’s Internal Audit Office in accordance with generally accepted governmental auditing standards as issued by the United State General Accounting Office by the Comptroller General of the United States; WSDOT Directive D27-50, Consultant Authorization, Selection, and Agreement Administration; and Office of Management and Budget circular A-128.

If upon audit, it is found that an overpayment of federal money in ineligible items of cost has occurred, the Railway shall reimburse the Local Agency for the amount of such overpayment in excess of participation (see Section VIII). The funds credited by the Railway will be reimbursed to the FHWA.

I. Scope of Work

The Railway will provide all the work, labor, materials, and services to install the warning devices hereinafter called “signals” as described and set forth in the “Project Description” and “Estimate of Cost.”

The Railway will provide all the work, labor, materials, and services to install the warning devices hereinafter called “signals” as described and set forth in the “Project Description” and “Estimate of Cost.”

The Local Agency shall perform those services necessary to facilitate the processing of all necessary documents required for the orderly progress of the project in accordance with the policies and procedures of the Washington State Department of Transportation (hereinafter called “Department”) and the Federal Aid Policy Guide of the Federal Highway Administration (hereinafter called “FHWA.”

The Local Agency shall install without expense to the Railway advance warning signs, standard pavement markings for railroad crossings, and guardrails or barriers to protect the signals from highway traffic when such protection is required.

II. Funding

The project will be financed in conformity with FHWA regulations adopted for safety improvement projects authorized in the Transportation Equity Act for the 21st Century.

III. Payment

Upon written authorization by the Local Agency, the Railway may proceed with the project. Following execution of this agreement, progress bills may be submitted to the Local Agency for the cost of labor, materials, and other services provided to date of billings and as shown in the Estimate of Cost or supplemental estimates of cost furnished by the Railway and accepted by the Local Agency, the Local Agency shall pay such progress billings promptly upon receipt. Final and detailed billing of all incurred costs shall be made by the Railway within one year of project completion, and the Local Agency shall pay all eligible amounts of such bill, less progress payments previously made.

The Local Agency agrees to reimburse the Railway for the amount shown in the Estimate of Cost for the actual cost of labor, materials, and other services furnished by the Railway pursuant to this agreement, provided the costs are eligible.

IV. Availability of Records

All project records in support of all costs incurred and expenditures are to be kept and maintained by the Railway and by the Local Agency in accordance with Subchapter B, Subpart H or Section 140.922(c) of the C.F.R.

The records shall be open to inspection by the Department and FHWA at all reasonable times and shall be retained and made available for such inspection for a period of not less than three years from the final payment of any funds to the Railway.

V. Maintenance of Facility

Upon completion of installation, the Railway shall operate and maintain the signals as required by law. The Local Agency will maintain the advance warning signs, the standard pavement markings for railroad crossings, and protecting barriers or guardrails at Local Agency expense. However, in the event that any existing or future legislation makes federal, state, or other public funds available for the operation, maintenance, repair, or replacement of signals at grade crossings, the Local Agency shall cooperate with the Railway to secure said funds for the operation, maintenance, repair, or replacement of the signals installed pursuant hereto. This agreement may be supplemented and amended as necessary for the operation and maintenance of said signals to qualify for such funds.

VI. Repair or Replacement of Damaged or Obsolete Facility

In the event one or more of the signals installed under this agreement are partially or wholly destroyed and its or their replacement value or cost of repairing cannot be recovered from the person or persons responsible for such destruction, then in that event, cost of repair of the signals or cost of installation of a new signal or signals shall be borne on a ratio agreed upon by the Railway and the Local Agency as specified on the front hereof.