Washington State
Department of Transportation

Bridge Design Manual (LRFD)

M 23-50.22

September 2023

Engineering and Regional Operations
Bridge and Structures Office

ENGLISH

Title VI Notice to Public

It is the Washington State Department of Transportation's (WSDOT) policy to assure that no person shall, on the grounds of race, color, national origin, as provided by Title VI of the Civil Rights Act of 1964, be excluded from participation in, be denied the benefits of, or be otherwise discriminated against under any of its programs and activities. Any person who believes his/her Title VI protection has been violated, may file a complaint with WSDOT's Office of Equity and Civil Rights (OECR). For additional information regarding Title VI complaint procedures and/or information regarding our non-discrimination obligations, please contact OECR's Title VI Coordinator at (360) 705-7090.

Americans with Disabilities Act (ADA) Information

This material can be made available in an alternate format by emailing the Office of Equity and Civil Rights at wsdotada@wsdot.wa.gov or by calling toll free, 855-362-4ADA(4232). Persons who are deaf or hard of hearing may make a request by calling the Washington State Relay at 711.

ESPAÑOL

Notificación de Titulo VI al Público

La política del Departamento de Transporte del Estado de Washington (Washington State Department of Transportation, WSDOT) es garantizar que ninguna persona, por motivos de raza, color u origen nacional, según lo dispuesto en el Título VI de la Ley de Derechos Civiles de 1964, sea excluida de la participación, se le nieguen los beneficios o se le discrimine de otro modo en cualquiera de sus programas y actividades. Cualquier persona que considere que se ha violado su protección del Título VI puede presentar una queja ante la Oficina de Equidad y Derechos Civiles (Office of Equity and Civil Rights, OECR) del WSDOT. Para obtener más información sobre los procedimientos de queja del Título VI o información sobre nuestras obligaciones contra la discriminación, comuníquese con el coordinador del Título VI de la OECR al (360) 705-7090.

Información de la Ley sobre Estadounidenses con Discapacidades (ADA, por sus siglas en inglés)

Este material puede estar disponible en un formato alternativo al enviar un correo electrónico a la Oficina de Equidad y Derechos Civiles a wsdotada@wsdot.wa.gov o llamando a la línea sin cargo 855-362-4ADA(4232). Personas sordas o con discapacidad auditiva pueden solicitar la misma información llamando al Washington State Relay al 711.

한국어 – KOREAN

제6조 관련 공지사항

워싱턴 주 교통부(WSDOT)는 1964년 민권법 타이틀 VI 규정에 따라, 누구도 인종, 피부색 또는 출신 국가를 근거로 본 부서의 모든 프로그램 및 활동에 대한 참여가 배제되거나 혜택이 거부되거나, 또는 달리 차별받지 않도록 하는 것을 정책으로 하고 있습니다. 타이틀 VI에 따른 그/그녀에 대한 보호 조항이 위반되었다고 생각된다면 누구든지 WSDOT의 평등 및 민권 사무국(OECR)에 민원을 제기할 수 있습니다. 타이틀 VI에 따른 민원 처리 절차에 관한 보다 자세한 정보 및/또는 본 부서의 차별금지 의무에 관한 정보를 원하신다면, (360) 705-7090으로 OECR의 타이틀 VI 담당자에게 연락해주십시오.

미국 장애인법(ADA) 정보

본 자료는 또한 평등 및 민권 사무국에 이메일 wsdotada@wsdot.wa.gov 을 보내시거나 무료 전화 855-362-4ADA(4232)로 연락하셔서 대체 형식으로 받아보실 수 있습니다. 청각 장애인은 워싱턴주 중계 711로 전화하여 요청하실 수 있습니다.

русский – RUSSIAN

Раздел VI Общественное заявление

Политика Департамента транспорта штата Вашингтон (WSDOT) заключается в том, чтобы исключить любые случаи дискриминации по признаку расы, цвета кожи или национального происхождения, как это предусмотрено Разделом VI Закона о гражданских правах 1964 года, а также случаи недопущения участия, лишения льгот или другие формы дискриминации в рамках любой из своих программ и мероприятий. Любое лицо, которое считает, что его средства защиты в рамках раздела VI были нарушены, может подать жалобу в Ведомство по вопросам равенства и гражданских прав WSDOT (OECR). Для дополнительной информации о процедуре подачи жалобы на несоблюдение требований раздела VI, а также получения информации о наших обязательствах по борьбе с дискриминацией, пожалуйста, свяжитесь с координатором OECR по разделу VI по телефону (360) 705-7090.

Закон США о защите прав граждан с ограниченными возможностями (ADA)

Эту информацию можно получить в альтернативном формате, отправив электронное письмо в Ведомство по вопросам равенства и гражданских прав по адресу wsdotada@wsdot.wa.gov или позвонив по бесплатному телефону 855-362-4ADA(4232). Глухие и слабослышащие лица могут сделать запрос, позвонив в специальную диспетчерскую службу штата Вашингтон по номеру 711.(4232). Глухие и слабослышащие лица могут сделать запрос, позвонив в специальную диспетчерскую службу штата Вашингтон по номеру 711.

tiếng Việt – VIETNAMESE

Thông báo Khoản VI dành cho công chúng

Chính sách của Sở Giao Thông Vận Tải Tiểu Bang Washington (WSDOT) là bảo đảm không để cho ai bị loại khỏi sự tham gia, bị từ khước quyền lợi, hoặc bị kỳ thị trong bất cứ chương trình hay hoạt động nào vì lý do chủng tộc, màu da, hoặc nguồn gốc quốc gia, theo như quy định trong Mục VI của Đạo Luật Dân Quyền năm 1964. Bất cứ ai tin rằng quyền bảo vệ trong Mục VI của họ bị vi phạm, đều có thể nộp đơn khiếu nại cho Văn Phòng Bảo Vệ Dân Quyền và Bình Đẳng (OECR) của WSDOT. Muốn biết thêm chi tiết liên quan đến thủ tục khiếu nại Mục VI và/hoặc chi tiết liên quan đến trách nhiệm không kỳ thị của chúng tôi, xin liên lạc với Phối Trí Viên Mục VI của OECR số (360) 705-7090.

Thông tin về Đạo luật Người Mỹ tàn tật (Americans with Disabilities Act, ADA)

Tài liệu này có thể thực hiện bằng một hình thức khác bằng cách email cho Văn Phòng Bảo Vệ Dân Quyền và Bình Đẳng wsdotada@wsdot.wa.gov hoặc gọi điện thoại miễn phí số, 855-362-4ADA(4232). Người điếc hoặc khiếm thính có thể yêu cầu bằng cách gọi cho Dịch vụ Tiếp âm Tiểu bang Washington theo số 711.

ARABIC – العَرَبِيّة

العنوان 6 إشعار للجمهور

تتمثل سياسة وزارة النقل في ولاية واشنطن (WSDOT) في ضمان عدم استبعاد أي شخص، على أساس العرق أو اللون أو الأصل القومي من المشاركة في أي من برامجها وأنشطتها أو الحرمان من الفوائد المتاحة بموجبها أو التعرض للتمييز فيها بخلاف ذلك، كما هو منصوص عليه في الباب السادس من قانون الحقوق المدنية لعام 1964. ويمكن لأي شخص يعتقد أنه تم انتهاك حقوقه التي يكفلها الباب السادس تقديم شكوى إلى مكتب المساواة والحقوق المدنية (OECR) التابع لوزارة النقل في ولاية واشنطن. للحصول على معلومات إضافية بشأن إجراءات الشكاوى و/أو بشأن التزاماتنا بعدم التمييز بموجب الباب السادس، يرجى الاتصال بمنسق الباب السادس في مكتب المساواة والحقوق المدنية على الرقم 7090-705 (360).

معلومات قانون الأمريكيين ذوي الإعاقة (ADA)

يمكن توفير هذه المواد في تنسيق بديل عن طريق إرسال رسالة بريد إلكتروني إلى مكتب المساواة والحقوق المدنية على wsdotada@wsdot.wa.gov أو عن طريق الاتصال بالرقم المجاني: 855-362-4ADA (4232). يمكن للأشخاص الصم أو ضعاف السمع تقديم طلب عن طريق الاتصال بخدمة Washington State Relay على الرق 711.

中文 – CHINESE

《权利法案》Title VI公告

<華盛頓州交通部(WSDOT)政策規定，按照《1964 年民權法案》第六篇規定，確保無人因種族、膚色或國籍而被排除在WSDOT任何計畫和活動之外，被剝奪相關權益或以其他方式遭到歧視。如任何人認為其第六篇保護權益遭到侵犯，則可向WSDOT的公平和民權辦公室(OECR)提交投訴。如需關於第六篇投訴程式的更多資訊和/或關於我們非歧視義務的資訊，請聯絡OECR的第六篇協調員，電話(360) 705-7090。

《美国残疾人法案》(ADA)信息

可向公平和民權辦公室發送電子郵件wsdotada@wsdot.wa.gov或撥打免費電話 855-362-4ADA(4232)，以其他格式獲取此資料。听力丧失或听觉障碍人士可拨打711联系Washington州转接站。

Af-soomaaliga – SOMALI

Ciwaanka VI Ogeysiiska Dadweynaha

Waa siyaasada Waaxda Gaadiidka Gobolka Washington (WSDOT) in la xaqiijiyo in aan qofna, ayadoo la cuskanaayo sababo la xariira isir, midab, ama wadanku kasoo jeedo, sida ku qoran Title VI (Qodobka VI) ee Sharciga Xaquuqda Madaniga ah ah oo soo baxay 1964, laga saarin ka qaybgalka, loo diidin faa'iidooyinka, ama si kale loogu takoorin barnaamijyadeeda iyo shaqooyinkeeda. Qof kasta oo aaminsan in difaaciisa Title VI la jebiyay, ayaa cabasho u gudbin kara Xafiiska Sinaanta iyo Xaquuqda Madaniga ah (OECR) ee WSDOT. Si aad u hesho xog dheeraad ah oo ku saabsan hanaannada cabashada Title VI iyo/ama xogta la xariirta waajibaadkeena ka caagan takoorka, fadlan la xariir Iskuduwaha Title VI ee OECR oo aad ka wacayso (360) 705-7090.

Macluumaadka Xeerka Naafada Marykanka (ADA)

Agabkaan ayaad ku heli kartaa qaab kale adoo iimeel u diraaya Xafiiska Sinaanta iyo Xaquuqda Madaniga ah oo aad ka helayso wsdotada@wsdot.wa.gov ama adoo wacaaya laynka bilaashka ah, 855-362-4ADA(4232). Dadka naafada maqalka ama maqalku ku adag yahay waxay ku codsan karaan wicitaanka Adeega Gudbinta Gobolka Washington 711.

Foreword

This manual has been prepared to provide Washington State Department of Transportation (WSDOT) bridge design engineers with a guide to the design criteria, analysis methods, and detailing procedures for the preparation of highway bridge and structure construction plans, specifications, and estimates.

It is not intended to be a textbook on structural engineering. It is a guide to acceptable WSDOT practice. This manual does not cover all conceivable problems that may arise but is intended to be sufficiently comprehensive to provide, along with sound engineering judgment, a safe guide for bridge engineering.

A thorough knowledge of the contents of this manual is essential for a high degree of efficiency in the engineering of WSDOT highway structures.

New provisions and revisions will be issued from time to time to keep this guide current. Suggestions for improvement and updating the manual are always welcome.

All manual modifications shall be approved by the Bridge Design Engineer.

The Federal Highway Administration has agreed to approve designs that follow the guidance in the *Bridge Design Manual*; therefore, following the guidance is mandatory for state highway projects. When proposed designs meet the requirements contained in the *Bridge Design Manual*, little additional documentation is required.

The electronic version of this document is available at:
www.wsdot.wa.gov/publications/manusl/m23-50.htm

Evan Grimm, P.E., S.E.
Bridge and Structures Engineer

Loren Wilson, P.E.
FHWA Washington Division Bridge Engineer

Chapter 1 General Information

1.1 Manual Description . . . 1-1
1.1.1 Purpose . . . 1-1
1.1.1.A Use of *Bridge Design Manual* on Design-Build and Progressive Design-Build Projects . . . 1-1
1.1.2 Specifications . . . 1-1
1.1.3 Format . . . 1-2
1.1.3.A General . . . 1-2
1.1.3.B Chapters . . . 1-2
1.1.3.C Numbering System . . . 1-3
1.1.3.C.1 Numbering of Sections . . . 1-3
1.1.3.C.2 Numbering of Sheets . . . 1-3
1.1.3.C.3 Appendices . . . 1-3
1.1.3.C.4 Numbering of Tables and Figures . . . 1-3
1.1.4 Revisions . . . 1-4
1.1.5 Design Memorandums . . . 1-4
1.2 Bridge and Structures Office Organization . . . 1-5
1.2.1 General . . . 1-5
1.2.2 Organizational Elements of the Bridge Office . . . 1-5
1.2.2.A State Bridge and Structures Engineer . . . 1-5
1.2.2.B State Bridge Design Engineer . . . 1-5
1.2.2.B.1 Structural Design Units . . . 1-5
1.2.2.B.2 Bridge Projects Unit . . . 1-6
1.2.2.B.3 Mega Projects Bridge Unit Manager . . . 1-7
1.2.2.B.4 Floating Bridge & Special Structures Design Unit Manager 1-7
1.2.2.B.5 Bridge Design Technology Unit Manager . . . 1-8
1.2.2.C State Bridge Preservation Engineer . . . 1-8
1.2.2.C.1 Bridge Preservation Office (BPO) . . . 1-8
1.2.2.D Bridge Asset Management Engineer . . . 1-8
1.2.2.E Staff Support . . . 1-9
1.2.2.F Office Administrator . . . 1-9
1.2.3 Unit Responsibilities and Expertise . . . 1-9
1.3 Roles, Responsibilities and Procedures . . . 1-10
1.3.1 General . . . 1-10
1.3.1.A Requirements for Engineering . . . 1-10

1.3.2 General Design Procedures 1-10
1.3.2.A PS&E Prepared by WSDOT Bridge and Structures Office 1-10
1.3.2.A.1 Design Team 1-10
1.3.2.A.2 Designer Responsibility 1-10
1.3.2.A.3 Structural Detailer Responsibility 1-12
1.3.2.A.4 Specialist Responsibility 1-12
1.3.2.A.5 Specification and Estimating Engineer Responsibilities . . 1-13
1.3.2.A.6 Design Unit Manager Responsibility 1-13
1.3.2.A.7 State Bridge Design Engineer's Responsibilities 1-15
1.3.2.A.8 Bridge Scheduling Engineer Responsibilities 1-15
1.3.2.A.9 WSDOT Design Reviewer's or Coordinator's Responsibilities 1-16
1.3.2.B Consultant PS&E — Projects on WSDOT Right of Way 1-16
1.3.2.B.1 WSDOT Consultant Liaison Engineer Responsibility 1-16
1.3.2.B.2 WSDOT Project Manager Responsibility 1-16
1.3.2.C Consultant PS&E — Projects on County and City Right of Way 1-16
1.3.2.D Structural Engineering and Significant Structures 1-17
1.3.3 Design/Check Calculation File 1-17
1.3.3.A File Format and Naming 1-17
1.3.3.B File Inclusions 1-18
1.3.3.C File Exclusions 1-19
1.3.4 PS&E Review Period 1-19
1.3.5 Addenda 1-19
1.3.6 Construction Support 1-20
1.3.6.A Shop Plans and Permanent Structure Construction Procedures 1-20
1.3.6.A.1 Bridge Shop Plans and Procedures 1-20
1.3.6.A.2 Sign Structure, Signal, and Illumination Shop Plans 1-22
1.3.6.A.3 Geotechnical Submittals 1-22
1.3.6.B Contract Changes (Change Orders and As-Builts) 1-23
1.3.6.B.1 Request for Changes 1-23
1.3.6.B.2 Processing Contract Revisions 1-23
1.3.6.B.3 As-Built Plan Process 1-24
1.3.7 Vacant 1-24
1.3.8 Archiving Design Calculations, Job Files, and S&E Files 1-24
1.3.8.A Upon Award of the Project 1-24
1.3.8.B Upon Physical Contract Completion 1-25
1.3.8.C Consultant Designs 1-26
1.3.8.D Design-Build and Progressive Design-Build Projects 1-27
1.3.9 Public Disclosure Policy Regarding Bridge Plans 1-27
1.3.10 Use of Computer Software 1-27
1.3.10.A Policy on Open Source Software 1-27
1.3.10.B Approved Software Tools 1-27

1.4 Quality Control/Quality Assurance/Quality Verification (QC/QA/QV) Procedures 1-28
1.4.1 General 1-28
1.4.2 WSDOT Prepared Bridge (or Structure) Preliminary Plans 1-29
1.4.2.A Description of Terms 1-29
1.4.3 WSDOT Prepared PS&E 1-30
1.4.3.A Plans, Calculations and Quantities Prepared by WSDOT Bridge and Structures Office 1-30
1.4.3.A.1 Description of Terms 1-30
1.4.3.A.2 Designer Responsibility 1-30
1.4.3.A.3 Checker Responsibility 1-31
1.4.3.A.4 Specialist/Bridge and Structures Architect Responsibility. 1-32
1.4.3.A.5 Design Unit Manager Responsibility. 1-32
1.4.3.A.6 State Bridge Design Engineer's Responsibilities 1-33
1.4.3.A.7 General Bridge Plan Stamping and Signature Policy 1-33
1.4.3.B Specifications and Estimates (S&E) Prepared by WSDOT Bridge and Structures Office 1-34
1.4.3.B.1 Description of Terms 1-34
1.4.3.B.2 General Specification and Estimate Stamping and Signature Policy 1-35
1.4.4 Consultant Prepared PS&E/Preliminary Plans on WSDOT Right of Way. 1-35
1.4.5 Structural Design Work Prepared Under Design-Build Method of Project Delivery . . 1-36
1.4.6 Structural Design Work Prepared Under Contractor Supplied Design Method of Project Delivery. 1-36

1.5 Bridge Design Scheduling 1-37
1.5.1 General 1-37
1.5.2 Preliminary Design Schedule 1-37
1.5.3 Final Design Schedule 1-37
1.5.3.A Breakdown of Project Staff-Hours Required 1-37
1.5.3.B Estimate Design Time Required 1-38
1.5.3.C Monthly Project Progress Report 1-39

1.6 Guidelines for Bridge Site Visits 1-40
1.6.1 Existing Structure Modifications 1-40
1.6.2 New Structures 1-41
1.6.3 Structure Demolition 1-41

1.7 Appendices 1-42
Appendix 1.1-A1 Bridge Design Manual Revision QC/QA Worksheet. 1-43
Appendix 1.2-A1 Bridge & Structures Design Office Workflow. 1-44
Appendix 1.3-A1 Bridge & Structures Design Calculations 1-45
Appendix 1.4-A1 QC/QA Signature Sheet 1-46
Appendix 1.4-A2 Min. Requirements for Check of Contractor-Design Buried Structure. 1-47

1.99 References 1-48

Chapter 2 Preliminary Design

2.1 Preliminary Studies 2-1
2.1.1 Interdisciplinary Design Studies 2-1
2.1.2 Value Engineering Studies 2-1
2.1.3 Preliminary Recommendations for Bridge Rehabilitation Projects 2-2
2.1.4 Preliminary Recommendations for New Bridge Projects 2-2
2.1.5 Type, Size, and Location (TS&L) Reports 2-3
2.1.5.A TS&L General 2-3
2.1.5.B TS&L Outline 2-4
2.1.5.B.1 Cover, Title Sheet, and Index 2-4
2.1.5.B.2 Photographs 2-4
2.1.5.B.3 Introduction 2-4
2.1.5.B.4 Project Description 2-4
2.1.5.B.5 Design Criteria 2-5
2.1.5.B.6 Structural Studies 2-5
2.1.5.B.7 Executive Summary 2-5
2.1.5.B.8 Drawings 2-5
2.1.5.C Reviews and Submittals 2-5
2.1.6 Alternate Bridge Designs 2-6
2.2 Preliminary Plan 2-7
2.2.1 Development of the Preliminary Plan 2-7
2.2.1.A Process and Sequence of Development 2-7
2.2.1.A.1 Schedule 2-7
2.2.1.A.2 Structure Site Data 2-7
2.2.1.A.3 Preliminary Plan Design Assignment 2-7
2.2.1.A.4 Preliminary Plan Development 2-8
2.2.1.A.5 Initial Internal Review 2-8
2.2.1.A.6 Request for Geotechnical and Hydraulics Information 2-9
2.2.1.A.7 Cost Estimate 2-9
2.2.1.A.8 Distribution for Preliminary Plan Approval 2-9
2.2.1.A.9 Distribution of Final Preliminary Plan 2-9
2.2.1.B Responsibilities 2-9
2.2.1.C Site Reconnaissance 2-10
2.2.1.D Coordination 2-10
2.2.1.E Consideration of Alternatives 2-10
2.2.1.F Designer Recommendation 2-11
2.2.1.G Concept Approval 2-11
2.2.1.H Consideration for Accelerated Bridge Construction 2-11

2.2.2 Documentation . . . 2-11
2.2.2.A Job File . . . 2-11
2.2.2.B Structure Site Data . . . 2-11
2.2.2.C Design Report or Design Summary and Value Engineering Studies . . . 2-12
2.2.2.D Other Resources . . . 2-12
2.2.2.E Notes . . . 2-12
2.2.3 General Factors for Consideration . . . 2-12
2.2.3.A Site Requirements . . . 2-12
2.2.3.B Safety . . . 2-12
2.2.3.C Economic . . . 2-12
2.2.3.D Structural . . . 2-13
2.2.3.E Environmental . . . 2-13
2.2.3.F Aesthetic . . . 2-13
2.2.3.G Construction . . . 2-13
2.2.3.H Hydraulic . . . 2-13
2.2.3.I Maintenance . . . 2-13
2.2.3.J Bridge Security . . . 2-13
2.2.3.K Alternatives . . . 2-14
2.2.3.L Other . . . 2-14
2.2.4 Permits . . . 2-14
2.2.4.A Coast Guard Waterway Jurisdiction and Navigation Permits for New Construction . . . 2-14
2.2.4.B Coast Guard Temporary Regulation Adjustments for Construction Operations at Existing Structures . . . 2-15
2.2.4.C Other . . . 2-15
2.2.5 Preliminary Cost Estimate . . . 2-15
2.2.6 Approvals . . . 2-16
2.2.6.A State Bridge and Structures Architect/Specialists . . . 2-16
2.2.6.B Bridge and Buried Structures Design . . . 2-17
2.2.6.C Region . . . 2-17
2.2.6.D Railroad . . . 2-18
2.3 Preliminary Plan Criteria . . . 2-19
2.3.1 Highway Crossings . . . 2-19
2.3.1.A General . . . 2-19
2.3.1.A.1 Mainline Highway Crossings . . . 2-19
2.3.1.A.2 Ramp Highway Crossings . . . 2-19
2.3.1.B Bridge Width . . . 2-19
2.3.1.C Horizontal Clearances . . . 2-19
2.3.1.D Vertical Clearances . . . 2-21
2.3.1.E End Slopes . . . 2-21
2.3.1.F Determination of Bridge Length . . . 2-21
2.3.1.G Pedestrian Crossings . . . 2-22
2.3.1.H Bridge Redundancy . . . 2-22

2.3.2 Railroad Crossings . . . 2-23
2.3.2.A General . . . 2-23
2.3.2.B Criteria . . . 2-23
2.3.2.C Bridge Width . . . 2-23
2.3.2.D Horizontal Clearances . . . 2-23
2.3.2.E Crash Walls . . . 2-23
2.3.2.F Vertical Clearances . . . 2-24
2.3.2.G Determination of Bridge Length . . . 2-24
2.3.2.H Special Considerations . . . 2-24
2.3.2.I Construction Openings . . . 2-24
2.3.3 Water Crossings . . . 2-25
2.3.3.A Bridge Width . . . 2-25
2.3.3.B Horizontal Clearances . . . 2-25
2.3.3.C Vertical Clearances . . . 2-25
2.3.3.D End Slopes . . . 2-25
2.3.3.E Determination of Bridge Length . . . 2-26
2.3.3.F Scour and Stream Migration . . . 2-26
2.3.3.G Pier Protection . . . 2-26
2.3.3.H Construction Access and Time Restrictions . . . 2-26
2.3.3.I Buried structures that qualify as a bridge per National Bridge Inspection Standards (NBIS) shall be designed to meet above requirements for Water Crossings . . . 2-27
2.3.4 Bridge Widening . . . 2-27
2.3.4.A Bridge Width . . . 2-27
2.3.4.B Traffic Restrictions . . . 2-27
2.3.4.C Construction Sequence . . . 2-27
2.3.5 Temporary Bridges . . . 2-28
2.3.5.A Bridge Width . . . 2-28
2.3.5.B Live Load . . . 2-28
2.3.5.C Temporary Bridge Type . . . 2-28
2.3.5.D Temporary Bridge Traffic Barrier . . . 2-28
2.3.6 Retaining Walls and Noise Walls . . . 2-28
2.3.7 Bridge Deck Drainage . . . 2-28
2.3.8 Bridge Deck Protection Systems . . . 2-29
2.3.9 Construction Clearances . . . 2-29
2.3.10 Design Guides for Falsework Depth Requirements . . . 2-29
2.3.10.A Falsework Spans < 36′ and No Skews . . . 2-30
2.3.10.B Falsework Spans > 36′ or Spans with Skews or Limited Falsework Depth . . . 2-30
2.3.10.C Bridge Widening . . . 2-30
2.3.10.D Bridge with Skews . . . 2-30

2.3.11 Inspection and Maintenance Access . . . 2-31
2.3.11.A General . . . 2-31
2.3.11.B Safety Cables . . . 2-32
2.3.11.C Travelers . . . 2-32
2.3.11.D Abutment Slopes . . . 2-32
2.3.11.E Inspection Lighting and Access . . . 2-32
2.3.11.E.1 Reinforced Concrete Box and Post-Tensioned Concrete Box Girders . . . 2-32
2.3.11.E.2 Composite Steel Box Girders . . . 2-32

2.4 Selection of Structure Type . . . 2-33

2.4.1 Bridge Types . . . 2-33
2.4.1.A Reinforced Concrete Slab . . . 2-33
2.4.1.A.1 Application . . . 2-33
2.4.1.A.2 Characteristics . . . 2-33
2.4.1.A.3 Depth/Span Ratios . . . 2-33
2.4.1.B Reinforced Concrete Tee-Beam . . . 2-34
2.4.1.B.1 Application . . . 2-34
2.4.1.B.2 Characteristics . . . 2-34
2.4.1.B.3 Depth/Span Ratios . . . 2-34
2.4.1.C Reinforced Concrete Box Girder . . . 2-34
2.4.1.C.1 Application . . . 2-34
2.4.1.C.2 Characteristics . . . 2-34
2.4.1.C.3 Depth/Span Ratios* . . . 2-34
2.4.1.D Post-tensioned Concrete Box Girder . . . 2-35
2.4.1.D.1 Application . . . 2-35
2.4.1.D.2 Characteristics . . . 2-35
2.4.1.D.3 Depth/Span Ratios* . . . 2-35
2.4.1.E Prestressed Concrete Girder Sections . . . 2-35
2.4.1.E.1 Application . . . 2-35
2.4.1.E.2 Characteristics . . . 2-36
2.4.1.F Composite Steel Plate Girder . . . 2-37
2.4.1.G Composite Steel Box Girder . . . 2-37
2.4.1.G.1 Use . . . 2-37
2.4.1.G.2 Characteristics . . . 2-37
2.4.1.G.3 Depth/Span Ratios . . . 2-37
2.4.1.H Steel Truss (Through or Deck) . . . 2-38
2.4.1.H.1 Application . . . 2-38
2.4.1.H.2 Characteristics . . . 2-38
2.4.1.H.3 Depth/Span Ratios . . . 2-38
2.4.1.I Segmental Concrete Box Girder . . . 2-38
2.4.1.I.1 Application . . . 2-38
2.4.1.I.2 Characteristics . . . 2-38
2.4.1.I.3 Depth/Span Ratios . . . 2-38

2.4.1.J Railroad Bridges . . . 2-38
2.4.1.J.1 Use . . . 2-38
2.4.1.J.2 Characteristics . . . 2-38
2.4.1.J.3 Depth/Span Ratios . . . 2-39
2.4.1.K Timber . . . 2-39
2.4.1.K.1 Use . . . 2-39
2.4.1.K.2 Characteristics . . . 2-39
2.4.1.K.3 Depth/Span Ratios . . . 2-39
2.4.1.L Other . . . 2-39
2.4.2 Wall Types . . . 2-39
2.4.3 Buried Structure Types . . . 2-39
2.5 Aesthetic Considerations . . . 2-40
2.5.1 General Visual Impact . . . 2-40
2.5.2 End Piers . . . 2-40
2.5.2.A Wingwalls . . . 2-40
2.5.2.B Retaining Walls . . . 2-40
2.5.2.C Slope Protection . . . 2-41
2.5.2.D Noise Walls . . . 2-41
2.5.3 Intermediate Piers . . . 2-41
2.5.4 Barrier and Wall Surface Treatments . . . 2-41
2.5.4.A Plain Surface Finish . . . 2-41
2.5.4.B Formliner Finishes . . . 2-41
2.5.4.C Pigmented Sealer . . . 2-41
2.5.4.D Architectural Details . . . 2-42
2.5.5 Superstructure . . . 2-42
2.6 Miscellaneous . . . 2-43
2.6.1 Structure Costs . . . 2-43
2.6.2 Handling and Shipping Precast Members and Steel Beams . . . 2-43
2.7 WSDOT Standards for Highway Bridges . . . 2-45
2.7.1 Design Elements . . . 2-45
2.7.1.A General . . . 2-45
2.7.1.B Substructure . . . 2-45
2.7.1.C Superstructure . . . 2-46
2.7.1.D Examples . . . 2-46
2.7.2 Detailing the Preliminary Plan . . . 2-47
2.8 Bridge Security . . . 2-48
2.8.1 General . . . 2-48
2.8.2 Design . . . 2-48
2.8.3 Design Criteria . . . 2-49

2.9 Bridge Standard Drawings 2-51

2.10 Appendices 2-52

Appendix 2.2-A1 Bridge Site Data General 2-53

Appendix 2.2-A2 Structure Site Data Rehabilitation 2-54

Appendix 2.2-A3 Structure Site Data Stream Crossings 2-55

Appendix 2.2-A4 Preliminary Plan Checklist. 2-56

Appendix 2.2-A5 Request For Geotechnical & Hydraulic Information for Bridge Preliminary Plan 2-58

2.99 References 2-59

Chapter 3 Loads

3.1 Scope . . . 3-1
3.2 Definitions . . . 3-2
3.3 Load Designations . . . 3-3
3.4 Limit States . . . 3-4
3.5 Load Factors and Load Combinations . . . 3-5
3.5.1 Load Factors for Substructure . . . 3-6
3.6 Loads and Load Factors for Construction . . . 3-7
3.7 Load Factors for Post-tensioning . . . 3-8
3.7.1 Post-tensioning Effects from Superstructure . . . 3-8
3.7.2 Secondary Forces from Post-tensioning, PS . . . 3-8
3.8 Permanent Loads . . . 3-9
3.8.1 Deck Overlay Requirement . . . 3-9
3.8.2 Distribution of Permanent Loads . . . 3-9
3.9 Live Loads . . . 3-10
3.9.1 Design Live Load . . . 3-10
3.9.2 Loading for Live Load Deflection Evaluation . . . 3-10
3.9.3 Distribution to Superstructure . . . 3-10
3.9.3.A Multi Girder Superstructure . . . 3-10
3.9.3.B Concrete Box Girders . . . 3-11
3.9.3.C Multiple Presence Factors . . . 3-11
3.9.3.D Distribution to Substructure . . . 3-11
3.9.3.E Distribution to Crossbeam . . . 3-11
3.9.4 Bridge Load Rating . . . 3-12
3.10 Pedestrian Loads . . . 3-13
3.11 Wind Loads . . . 3-14
3.11.1 Wind Load to Superstructure . . . 3-14
3.11.2 Wind Load to Substructure . . . 3-14
3.11.3 Wind on Noise Walls . . . 3-14
3.12 Loads on Buried Structures . . . 3-15
3.13 Earthquake Effects . . . 3-16
3.14 Substructure, Scour and Earth Pressure . . . 3-17
3.15 Force Effects Due to Superimposed Deformations . . . 3-18

3.16 Other Loads 3-19
3.16.1 Buoyancy 3-19
3.16.2 Collision Force on Bridge Substructure 3-19
3.16.3 Collision Force on Traffic Barrier 3-19
3.16.4 Force from Stream Current, Floating Ice, and Drift 3-19
3.16.5 Ice Load 3-19
3.16.6 Uniform Temperature Load 3-19
3.16.7 Vehicular Collision Force: CT 3-19
3.16.8 Bridges Subjected to Tsunami Effects 3-20
3.99 References 3-22

Chapter 4 Seismic Design and Retrofit

4.1 General 4-1
4.1.1 Expected Bridge Seismic Performance 4-2
4.1.2 Expected Post-earthquake Service Levels 4-2
4.1.3 Expected Post-earthquake Damage States 4-3
4.2 WSDOT Additions and Modifications to AASHTO *Guide Specifications for LRFD Seismic Bridge Design* **(SEISMIC)** 4-4
4.2.1 Definitions 4-4
4.2.2 Earthquake Resisting Systems (ERS) Requirements for Seismic Design Categories (SDCs) C and D 4-4
4.2.3 Seismic Ground Shaking Hazard 4-9
4.2.3.A Site Coefficients 4-10
4.2.4 Selection of Seismic Design Category (SDC) 4-10
4.2.5 Temporary and Staged Construction 4-11
4.2.6 Load and Resistance Factors 4-11
4.2.7 Balanced Stiffness Requirements and Balanced Frame Geometry Recommendation 4-11
4.2.8 Selection of Analysis Procedure to Determine Seismic Demand 4-11
4.2.9 Member Ductility Requirement for SDCs C and D 4-11
4.2.10 Longitudinal Restrainers 4-11
4.2.11 Abutments 4-12
4.2.12 Foundation – General 4-16
4.2.13 Foundation – Spread Footing 4-16
4.2.14 Procedure 3: Nonlinear Time History Method 4-16
4.2.15 I_{eff} for Box Girder Superstructure 4-16
4.2.16 Foundation Rocking 4-16
4.2.17 Drilled Shafts 4-16
4.2.18 Longitudinal Direction Requirements 4-17
4.2.19 Liquefaction Design Requirements 4-17
4.2.20 Reinforcing Steel 4-17
4.2.21 Concrete Modeling 4-18
4.2.22 Expected Nominal Moment Capacity 4-18
4.2.23 Interlocking Bar Size 4-18
4.2.24 Splicing of Longitudinal Reinforcement in Columns Subject to Ductility Demands for SDCs C and D 4-18
4.2.25 Development Length for Column Bars Extended into Oversized Pile Shafts f or SDCs C and D 4-18
4.2.26 Lateral Confinement for Oversized Pile Shaft for SDCs C and D 4-18
4.2.27 Lateral Confinement for Non-Oversized Strengthened Pile Shaft for SDCs C and D. 4-18
4.2.28 Requirements for Capacity Protected Members 4-19

4.2.29 Superstructure Capacity Design for Transverse Direction (Integral Bent Cap) for SDCs C and D 4-19
4.2.30 Superstructure Design for Non Integral Bent Caps for SDCs B, C, and D 4-19
4.2.31 Joint Proportioning 4-19
4.2.32 Cast-in-Place and Precast Concrete Piles 4-20
4.2.33 Seismic Resiliency using Innovative Materials and Construction 4-20
4.3 Seismic Design Requirements for Bridge Modifications and Widening Projects 4-21
4.3.1 General 4-21
4.3.2 Bridge Widening Project Classification 4-21
4.3.2.A Minor Modification and Widening Projects 4-21
4.3.2.B Major Modifications and Widening Projects 4-21
4.3.3 Seismic Design Requirements Bridge Widening Projects 4-22
4.3.4 Scoping for Bridge Widening and Liquefaction Mitigation. 4-24
4.3.5 Design and Detailing Considerations 4-24
4.4 Seismic Retrofitting of Existing Ordinary Bridges 4-26
4.4.1 Seismic Analysis Requirements 4-26
4.4.2 Seismic Retrofit Design. 4-27
4.4.3 Computer Analysis Verification 4-27
4.4.4 Earthquake Restrainers 4-27
4.4.5 Isolation Bearings 4-27
4.5 Seismic Design Requirements for Retaining Walls and Buried Structure 4-28
4.5.1 Seismic Design of Retaining Walls 4-28
4.5.2 Seismic Design of Buried Structure 4-28
4.99 References 4-29

Chapter 5 Concrete Structures

5.1 Materials 5-2
5.1.1 Concrete 5-2
5.1.1.A Strength of Concrete 5-2
5.1.1.A.1 CIP Concrete Bridges 5-2
5.1.1.A.2 Prestressed Concrete Girders 5-2
5.1.1.B Classes of Concrete 5-2
5.1.1.B.1 Class 3000 5-2
5.1.1.B.2 Class 4000 5-2
5.1.1.B.3 Class 4000A 5-2
5.1.1.B.4 Class 4000D 5-2
5.1.1.B.5 Class 4000P and 5000P 5-2
5.1.1.B.6 Class 4000W 5-3
5.1.1.B.7 Class 5000 or Higher 5-3
5.1.1.C Relative Compressive Concrete Strength 5-3
5.1.1.D Modulus of Elasticity 5-4
5.1.1.E Shrinkage and Creep 5-4
5.1.1.F Shrinkage 5-5
5.1.1.G Grout 5-5
5.1.1.H Mass Concrete 5-5
5.1.1.I Self-Consolidating Concrete (SCC) 5-6
5.1.1.J Shotcrete 5-6
5.1.1.K Lightweight Aggregate Concrete 5-7
5.1.1.L Concrete Cover to Reinforcement 5-8
5.1.1.L.1 Precast Prestressed Concrete Girders 5-8
5.1.1.L.2 Concrete Exposed to Salt/Seawater 5-8
5.1.1.M Ultra-High Performance Concrete (UHPC) 5-8
5.1.2 Reinforcing Steel 5-9
5.1.2.A Types and Grades 5-9
5.1.2.A.1 Corrosion Resistant Reinforcement 5-9
5.1.2.B Sizes 5-10
5.1.2.C Development 5-10
5.1.2.C.1 Tension Development Length 5-10
5.1.2.C.2 Compression Development Length 5-10
5.1.2.C.3 Tension Development Length of Standard Hooks 5-10
5.1.2.D Splices 5-11
5.1.2.D.1 Tension Lap Splices 5-11
5.1.2.D.2 Compression Lap Splices 5-11
5.1.2.D.3 Mechanical Splices 5-11
5.1.2.D.4 Welded Splices 5-11
5.1.2.E Hooks and Bends 5-11

5.1.2.F Fabrication Lengths . . . 5-12
5.1.2.G Placement . . . 5-12
5.1.2.H Joint and Corner Details . . . 5-13
5.1.2.H.1 T-Joint . . . 5-13
5.1.2.H.2 “Normal” Right Corners . . . 5-13
5.1.2.H.3 Right or Obtuse Angle Corners . . . 5-13
5.1.2.I Welded Wire Reinforcement . . . 5-14
5.1.2.J Headed Steel Reinforcing Bars . . . 5-14
5.1.3 Prestressing Steel . . . 5-14
5.1.3.A General . . . 5-14
5.1.3.B Stress Limits . . . 5-15
5.1.3.C Prestressing Strands . . . 5-15
5.1.3.C.1 Straight Strands . . . 5-15
5.1.3.C.2 Harped Strands . . . 5-15
5.1.3.C.3 Temporary Strands . . . 5-15
5.1.3.D Development of Prestressing Strand . . . 5-16
5.1.3.D.1 General . . . 5-16
5.1.3.D.2 Partially Debonded Strands . . . 5-16
5.1.3.D.3 Strand Development Outside of Prestressed Concrete Girders . . . 5-16
5.1.4 Prestress Losses . . . 5-22
5.1.4.A Instantaneous Losses . . . 5-22
5.1.4.A.1 Elastic Shortening of Concrete . . . 5-22
5.1.4.A.2 Anchorage Set Loss . . . 5-22
5.1.4.A.3 Friction Losses . . . 5-23
5.1.4.B Approximate Estimate of Time-Dependent Losses . . . 5-23
5.1.4.C Refined Estimates of Time-Dependent Losses . . . 5-23
5.1.4.D Total Effective Prestress . . . 5-24
5.1.4.E Temporary Losses . . . 5-25
5.1.4.E.1 Lifting of Girders From Casting Beds . . . 5-25
5.1.4.E.2 Transportation . . . 5-25
5.1.4.E.3 Erection . . . 5-25
5.1.4.E.4 Final Configuration . . . 5-25
5.1.5 Post-tensioning Systems . . . 5-26
5.2 Design Considerations . . . 5-27
5.2.1 Service and Fatigue Limit States . . . 5-27
5.2.1.A General . . . 5-27
5.2.1.B Control of Cracking . . . 5-27
5.2.1.C Stress Limits in Prestressed Concrete Members . . . 5-27
5.2.2 Strength-Limit State . . . 5-29
5.2.2.A Flexure . . . 5-29
5.2.2.A.1 Flexural Design of Nonprestressed Singly-Reinforced Rectangular Beams . . . 5-30

5.2.2.B Shear . . . 5-30
5.2.2.C Interface Shear . . . 5-31
5.2.2.C.1 Interface Shear Between Deck Slab and Girder . . . 5-32
5.2.2.C.2 Interface Shear Friction at Girder End . . . 5-32
5.2.2.D Shear and Torsion . . . 5-33
5.2.3 Strut-and-Tie Model . . . 5-33
5.2.4 Deflection and Camber . . . 5-34
5.2.4.A General . . . 5-34
5.2.4.B Deflection Calculation for Prestressed Concrete Girders . . . 5-34
5.2.4.B.1 Elastic Deflection Due to Release of Prestress . . . 5-35
5.2.4.B.2 Creep Deflection Before Cutting Temporary Strands . . . 5-35
5.2.4.B.3 Deflection Due to Cutting of Temporary Strands . . . 5-35
5.2.4.B.4 Diaphragm Load Deflection . . . 5-35
5.2.4.B.5 Creep Deflection After Casting Diaphragms . . . 5-35
5.2.4.B.6 Deck Slab Load Deflection . . . 5-35
5.2.4.B.7 Superimposed Dead Load Deflection . . . 5-35
5.2.4.B.8 Final Camber . . . 5-35
5.2.4.C Pre-camber . . . 5-36
5.2.5 Construction Joints . . . 5-36
5.2.5.A Types of Joints . . . 5-36
5.2.5.B Shear Keys . . . 5-36
5.2.6 Inspection Access and Lighting . . . 5-37
5.2.6.A Inspection Access . . . 5-37
5.2.6.B Access Hatch, Air Vent Holes and Inspection Lighting . . . 5-37
5.3 Reinforced Concrete Box Girder Bridges . . . 5-40
5.3.1 Box Girder Basic Geometries . . . 5-40
5.3.1.A Web Spacing . . . 5-40
5.3.1.B Basic Dimensions . . . 5-40
5.3.1.B.1 Top Slab Thickness, T1 (includes ½″ wearing surface) . . . 5-40
5.3.1.B.2 Bottom Slab Thickness, T2 . . . 5-41
5.3.1.B.3 Girder Stem (Web) Thickness, T3 . . . 5-41
5.3.1.B.4 Intermediate Diaphragm Thickness, T4 and Diaphragm Spacing . . . 5-41
5.3.1.C Construction Considerations . . . 5-42
5.3.1.D Load Distribution . . . 5-42
5.3.1.D.1 Unit Design . . . 5-42
5.3.1.D.2 Dead Loads . . . 5-42
5.3.1.D.3 Live Load . . . 5-42
5.3.2 Reinforcement . . . 5-45
5.3.2.A Top Slab Reinforcement . . . 5-45
5.3.2.A.1 Near Center of Span . . . 5-45
5.3.2.A.2 Near Intermediate Piers . . . 5-45
5.3.2.A.3 Bar Patterns . . . 5-45

5.3.2.B Bottom Slab Reinforcement 5-46
5.3.2.B.1 Near Center of Span 5-46
5.3.2.B.2 Near Intermediate Piers 5-47
5.3.2.B.3 Bar Patterns 5-47
5.3.2.C Web Reinforcement 5-47
5.3.2.C.1 Vertical Stirrups 5-47
5.3.2.C.2 Web Longitudinal Reinforcement 5-48
5.3.2.D Intermediate Diaphragm 5-48
5.3.3 Crossbeam 5-52
5.3.3.A General 5-52
5.3.3.B Basic Geometry 5-52
5.3.3.C Loads 5-52
5.3.3.D Reinforcement Design and Details 5-52
5.3.3.D.1 Top Reinforcement 5-55
5.3.3.D.2 Skin Reinforcement 5-55
5.3.4 End Diaphragm 5-55
5.3.4.A Basic Geometry 5-55
5.3.4.B Reinforcing Steel Details 5-57
5.3.5 Dead Load Deflection and Camber 5-57
5.3.6 Thermal Effects 5-58
5.3.6.A Effective Bridge Temperature and Movement 5-58
5.3.6.B Differential Temperature 5-58
5.3.7 Hinges 5-58
5.3.8 Drain Holes 5-58
5.4 Hinges and Inverted T-Beam Pier Caps 5-60
5.5 Bridge Widenings 5-62
5.5.1 Review of Existing Structures 5-62
5.5.1.A General 5-62
5.5.1.B Original Contract Plans and Special Provisions 5-62
5.5.1.C Original Calculations 5-62
5.5.1.D Final Records 5-62
5.5.2 Analysis and Design Criteria 5-63
5.5.2.A General 5-63
5.5.2.A.1 Appearance 5-63
5.5.2.A.2 Materials 5-63
5.5.2.A.3 Load Distribution and Construction Sequence 5-63
5.5.2.A.4 Specifications 5-63
5.5.2.A.5 Geometrical Constraints 5-63
5.5.2.A.6 Overlay 5-63
5.5.2.A.7 Strength of the Existing Structure 5-64
5.5.2.A.8 Special Considerations 5-64
5.5.2.B Seismic Design Criteria for Bridge Widenings 5-64

5.5.2.C Substructure 5-65
5.5.2.C.1 Selection of Foundation 5-65
5.5.2.C.2 Scour and Drift 5-65
5.5.2.D Superstructure 5-65
5.5.2.D.1 Camber 5-65
5.5.2.D.2 Closure Strip 5-65
5.5.2.D.3 Stress Levels and Deflections in Existing Structures 5-66
5.5.2.E Stability of Widening 5-66
5.5.3 Removing Portions of the Existing Structure 5-66
5.5.4 Attachment of Widening to Existing Structure 5-67
5.5.4.A General 5-67
5.5.4.A.1 Lap and Mechanical Splices 5-67
5.5.4.A.2 Welding Reinforcement 5-67
5.5.4.A.3 Drilling Into Existing Structure 5-67
5.5.4.A.4 Dowelling Reinforcing Bars Into the Existing Structure . . 5-67
5.5.4.A.5 Shear Transfer Across a Dowelled Joint 5-69
5.5.4.A.6 Preparation of Existing Surfaces for Concreting 5-69
5.5.4.A.7 Control of Shrinkage and Deflection on Connecting Reinforcement 5-69
5.5.4.A.8 Post-tensioning 5-69
5.5.4.B Connection Details 5-70
5.5.4.B.1 Box Girder Bridges 5-70
5.5.4.B.2 Flat Slab Bridges 5-76
5.5.4.B.3 T-Beam Bridges 5-77
5.5.4.B.4 Prestressed Concrete Girder Bridges 5-78
5.5.5 Expansion Joints 5-79
5.5.6 Possible Future Widening for Current Designs 5-80
5.5.7 Bridge Widening Falsework 5-80
5.6 Prestressed Concrete Girder Superstructures 5-81
5.6.1 WSDOT Standard Prestressed Concrete Girder Types 5-81
5.6.2 Design Criteria 5-84
5.6.2.A Support Conditions 5-85
5.6.2.B Composite Action 5-85
5.6.2.B.1 General 5-85
5.6.2.B.2 Load Application 5-85
5.6.2.B.3 Composite Section Properties 5-85
5.6.2.B.4 Slenderness Ratio 5-85
5.6.2.C Design Procedure 5-87
5.6.2.C.1 General 5-87
5.6.2.C.2 Stress Conditions 5-87
5.6.2.D Standard Strand Locations 5-87

5.6.2.E Girder End Types . . . 5-89
5.6.2.E.1 End Type A . . . 5-89
5.6.2.E.2 End Type B . . . 5-91
5.6.2.E.3 End Type C . . . 5-92
5.6.2.E.4 End Type D . . . 5-94
5.6.2.F Splitting Resistance in End Regions of Prestressed Concrete Girders . . . 5-95
5.6.2.G Confinement Reinforcement in End Regions of Prestressed Concrete Girders . . . 5-95
5.6.2.H Girder Stirrups . . . 5-95
5.6.2.I Section Properties . . . 5-95
5.6.3 Fabrication and Handling . . . 5-97
5.6.3.A Shop Plans . . . 5-97
5.6.3.B Special Problems for Fabricators . . . 5-97
5.6.3.B.1 Strand Tensioning . . . 5-97
5.6.3.B.2 Hold Down Forces . . . 5-97
5.6.3.B.3 Numbers of Strands . . . 5-97
5.6.3.C Handling of Prestressed Concrete Girders . . . 5-97
5.6.3.C.1 In-Plant Handling . . . 5-97
5.6.3.C.2 Lateral Stability During Handling . . . 5-97
5.6.3.D Shipping Prestressed Concrete Girders . . . 5-98
5.6.3.D.1 General . . . 5-98
5.6.3.D.2 Mode of Transportation . . . 5-98
5.6.3.D.3 Weight Limitations . . . 5-99
5.6.3.D.4 Support Locations . . . 5-99
5.6.3.D.5 Height Limitations . . . 5-99
5.6.3.D.6 Lateral Stability During Shipping . . . 5-99
5.6.3.E Erection and Bridge Deck Construction . . . 5-100
5.6.3.F Construction Sequence for Multi-Span Prestressed Concrete Girder Bridges . . . 5-101
5.6.4 Superstructure Optimization . . . 5-101
5.6.4.A Girder Selection . . . 5-101
5.6.4.A.1 Girder Series Selection . . . 5-101
5.6.4.A.2 Girder Concrete Strength . . . 5-101
5.6.4.A.3 Girder Spacing . . . 5-101
5.6.4.B Bridge Deck Cantilevers . . . 5-102
5.6.4.B.1 Appearance . . . 5-102
5.6.4.B.2 Economy . . . 5-102
5.6.4.B.3 Bridge Deck Strength . . . 5-102
5.6.4.B.4 Drainage . . . 5-102
5.6.4.B.5 Bridge Curvature . . . 5-103

5.6.4.C Diaphragm Requirements . . . 5-103
5.6.4.C.1 General . . . 5-103
5.6.4.C.2 Design . . . 5-103
5.6.4.C.3 Geometry . . . 5-103
5.6.4.C.4 Full or Partial Depth Intermediate Diaphragms . . . 5-104
5.6.4.C.5 Tub Girder Intermediate Diaphragms . . . 5-104
5.6.4.D Skew Effects . . . 5-104
5.6.4.D.1 Analysis . . . 5-104
5.6.4.D.2 Detailing . . . 5-105
5.6.4.E Grade and Cross Slope Effects . . . 5-106
5.6.4.F Curve Effect and Flare Effect . . . 5-106
5.6.4.G Girder Pad Reinforcement . . . 5-106
5.6.5 Repair of Damaged Prestressed Concrete Girders at Fabrication . . . 5-106
5.6.6 Repair of Damaged Prestressed Concrete Girders in Existing Bridges . . . 5-107
5.6.6.A General . . . 5-107
5.6.6.B Repair Procedure . . . 5-107
5.6.6.B.1 Minor Damage . . . 5-107
5.6.6.B.2 Moderate Damage . . . 5-107
5.6.6.B.3 Severe Damage . . . 5-108
5.6.6.B.4 Repair vs. Replacement of Damaged Girder . . . 5-109
5.6.6.C Miscellaneous References . . . 5-111
5.6.7 Deck Girders . . . 5-111
5.6.7.A General . . . 5-111
5.6.7.B Slab Girders . . . 5-112
5.6.7.C Double-Tee and Ribbed Deck Girders . . . 5-112
5.6.7.D Deck Bulb-Tee Girders . . . 5-112
5.6.7.E Wide Flange Deck Girders . . . 5-113
5.6.7.F Wide Flange Thin Deck Girders . . . 5-114
5.6.8 Prestressed Concrete Tub Girders . . . 5-114
5.6.8.A General . . . 5-114
5.6.8.B Curved Tub Girders . . . 5-114
5.6.9 Prestressed Concrete Girder Checking Requirement . . . 5-115
5.6.10 Review of Shop Plans for Pre-tensioned Girders . . . 5-115
5.7 Bridge Decks . . . 5-116
5.7.1 Bridge Deck Requirements . . . 5-116
5.7.1.A Minimum Bridge Deck Thickness . . . 5-116
5.7.1.B Computation of Bridge Deck Strength . . . 5-116
5.7.1.C Computation of “A” Dimension . . . 5-117
5.7.1.D Staged Construction . . . 5-117

5.7.2 Bridge Deck Reinforcement . . . 5-117
5.7.2.A Transverse Reinforcement . . . 5-117
5.7.2.B Longitudinal Reinforcement . . . 5-118
5.7.2.B.1 Simple Spans . . . 5-118
5.7.2.B.2 Continuous Spans . . . 5-119
5.7.2.C Distribution of Flexural Reinforcement . . . 5-119
5.7.2.D Bar Patterns . . . 5-120
5.7.2.E Concrete Bridge Deck Design and Detailing . . . 5-121
5.7.3 Stay-In-Place Deck Panels . . . 5-122
5.7.3.A General . . . 5-122
5.7.3.B Design Criteria . . . 5-122
5.7.3.C Limitations on SIP Deck Panels . . . 5-122
5.7.4 Bridge Deck Protection . . . 5-123
5.7.4.A Deck Protection Systems . . . 5-123
5.7.4.A.1 Type 1 Protection System . . . 5-123
5.7.4.A.2 Type 2 Protection System . . . 5-124
5.7.4.A.3 Type 3 Protection System . . . 5-126
5.7.4.A.4 Type 4 Protection System . . . 5-127
5.7.4.A.5 Type 5 Protection System . . . 5-127
5.7.4.B Existing Bridge Deck Widening . . . 5-128
5.7.4.B.1 Rebar . . . 5-128
5.7.4.B.2 Concrete Decks . . . 5-128
5.7.4.B.3 Concrete Overlays . . . 5-128
5.7.4.B.4 HMA Overlays . . . 5-129
5.7.4.B.5 Small Width Widening . . . 5-129
5.7.4.B.6 Expansion Joints . . . 5-129
5.7.4.C Bridge Deck Overlays . . . 5-129
5.7.4.C.1 Surface Preparation . . . 5-130
5.7.4.C.2 Existing Structure Evaluation . . . 5-130
5.7.4.C.3 Deck Repair . . . 5-131
5.7.5 HMA Paving on Bridge Decks . . . 5-131
5.7.5.A Design Responsibilities . . . 5-131
5.7.5.B Design Considerations . . . 5-132
5.7.5.B.1 HMA Depth . . . 5-132
5.7.5.B.2 Grade Controlled Structures . . . 5-132
5.7.5.B.3 Grade Transitions . . . 5-133
5.7.5.B.4 Full Removal . . . 5-133
5.7.5.B.5 Bare Deck HMA . . . 5-133
5.7.5.B.6 Bridge Transverse Joint Seals . . . 5-134
5.7.5.B.7 Bituminous Surface Treatments (BST) . . . 5-134
5.7.5.B.8 Culverts and Other Structures . . . 5-135
5.7.5.B.9 Paving Equipment Load Restrictions . . . 5-135
5.7.5.B.10 Plans Preparation . . . 5-135

5.8 Cast-in-place Post-Tensioned Bridges 5-136
5.8.1 Design Parameters 5-136
5.8.1.A General 5-136
5.8.1.B Bridge Types 5-136
5.8.1.B.1 Slab Bridge 5-136
5.8.1.B.2 T-Beam Bridge 5-137
5.8.1.B.3 Box Girder Bridge 5-137
5.8.1.C Strand and Tendon Arrangements 5-137
5.8.1.D Layout of Anchorages and End Blocks 5-139
5.8.1.E Superstructure Shortening 5-142
5.8.1.F Effects of Curved Tendons 5-142
5.8.1.G Edge Tension Forces 5-143
5.8.2 Analysis 5-143
5.8.2.A General 5-143
5.8.2.B Section Properties 5-144
5.8.2.C Preliminary Stress Check 5-144
5.8.2.D Camber 5-145
5.8.2.E Expansion Bearing Offsets 5-145
5.8.3 Post-tensioning 5-145
5.8.3.A Tendon Layout 5-145
5.8.3.B Prestress Losses 5-146
5.8.3.C Jacking End 5-146
5.8.3.D Steel Stress Curve 5-147
5.8.3.E Flexural Stress in Concrete 5-148
5.8.3.F Prestress Moment Curves 5-149
5.8.3.F.1 Single-Span Bridges, Simply Supported 5-149
5.8.3.F.2 Multispan Continuous Bridges 5-149
5.8.3.G Partial prestressing 5-149
5.8.4 Shear and Anchorages 5-149
5.8.4.A Shear Capacity 5-149
5.8.4.B Horizontal Shear 5-150
5.8.4.C End Block Stresses 5-150
5.8.5 Temperature Effects 5-150
5.8.6 Construction 5-151
5.8.6.A General 5-151
5.8.6.B Contract Plans 5-151
5.8.6.C Shop Plans 5-151
5.8.6.D Review of Post-tensioning Installation Drawings 5-151
5.8.6.E During Construction 5-152
5.8.7 Post-tensioning Notes Contract Plans 5-152
5.8.7.A Plan Details 5-152
5.8.7.B Post-tensioning Notes 5-153

5.9 Spliced Prestressed Concrete Girders 5-154
5.9.1 Definitions 5-154
5.9.2 WSDOT Criteria for Use of Spliced Girders 5-154
5.9.3 Girder Segment Design 5-155
5.9.3.A Design Considerations 5-155
5.9.3.B Post-tensioning 5-155
5.9.4 Joints Between Segments 5-156
5.9.4.A General 5-156
5.9.4.B Location of Closure Joints 5-156
5.9.4.C Details of Closure Joints 5-157
5.9.4.D Joint Design 5-157
5.9.5 Review of Shop Plans for Spliced Prestressed Concrete Girders 5-160
5.9.6 Post-tensioning Notes — Spliced Prestressed Concrete Girders 5-160

5.10 Segmental Bridges 5-161
5.10.1 Cross Section Dimensions 5-161

5.11 Bridge Standard Drawings 5-162

5.12 Appendices 5-166
Appendix 5.1-A1 Standard Hooks 5-169
Appendix 5.1-A2 Minimum Reinforcement Clearance and Spacing for Beams and Columns 5-170
Appendix 5.1-A3 Reinforcing Bar Properties 5-171
Appendix 5.1-A4 Tension Development Length of Deformed Bars 5-172
Appendix 5.1-A5 Compression Development Length and Minimum Lap Splice of Grade 60 Bars 5-175
Appendix 5.1-A6 Tension Development Length of 90º and 180º Standard Hooks 5-176
Appendix 5.1-A7 Tension Lap Splice Lengths of Grade 60 Bars – Class B 5-178
Appendix 5.1-A8 Prestressing Strand Properties and Development Length 5-181
Appendix 5.2-A1 Working Stress Design 5-182
Appendix 5.2-A2 Working Stress Design 5-183
Appendix 5.2-A3 Working Stress Design 5-184
Appendix 5.3-A1 Positive Moment Reinforcement 5-185
Appendix 5.3-A2 Negative Moment Reinforcement 5-186
Appendix 5.3-A3 Adjusted Negative Moment Case I (Design for M at Face of Support) 5-187
Appendix 5.3-A4 Adjusted Negative Moment Case II (Design for M at 1/4 Point) 5-188
Appendix 5.3-A5 Cast-In-Place Deck Slab Design for Positive Moment Regions f'_c = 4.0 ksi 5-189
Appendix 5.3-A6 Cast-In-Place Deck Slab Design for Negative Moment Regions f'_c = 4.0 ksi 5-190
Appendix 5.3-A7 Slab Overhang Design-Interior Barrier Segment 5-191
Appendix 5.3-A8 Slab Overhang Design-End Barrier Segment 5-192

Appendix 5.6-A1-1 Span Capability of W Girders 5-193
Appendix 5.6-A1-2 Span Capability of WF Girders 5-194
Appendix 5.6-A1-3 Span Capability of Deck Bulb Tee Girders 5-196
Appendix 5.6-A1-4 Span Capability of WF Thin Deck Girders. 5-197
Appendix 5.6-A1-5 Span Capability of WF Deck Girders. 5-198
Appendix 5.6-A1-6 Span Capability of Trapezoidal Tub Girders without Top Flange. . . . 5-199
Appendix 5.6-A1-7 Span Capability of Trapezoidal Tub Girders with Top Flange 5-200
Appendix 5.6-A1-8 Span Capability of Post-tensioned Spliced I-Girders 5-201
Appendix 5.6-A1-9 Span Capability of Post-tensioned Spliced Tub Girders 5-203
Appendix 5.6-A1-10 Span Capability of WF Girders with Lighweight Concrete. 5-205

Chapter 6 Structural Steel

6.0 Structural Steel . . . 6-1
6.0.1 Introduction . . . 6-1
6.0.2 Special Requirements for Steel Bridge Rehabilitation or Modification . . . 6-1
6.0.3 Retrofit of Low Vertical Clearance Truss Portal and Sway Members . . . 6-1

6.1 Design Considerations . . . 6-6
6.1.1 Codes, Specification, and Standards . . . 6-6
6.1.2 WSDOT Steel Bridge Practice . . . 6-7
6.1.3 Preliminary Girder Proportioning . . . 6-8
6.1.4 Estimating Structural Steel Weights . . . 6-9
6.1.5 Bridge Steels . . . 6-10
6.1.6 Plate Sizes . . . 6-11
6.1.7 Girder Segment Sizes . . . 6-11
6.1.8 Computer Programs . . . 6-12
6.1.9 Fasteners . . . 6-12
6.1.9.A ASTM F 3125 GR A325 & GR F1852 . . . 6-13
6.1.9.B ASTM A449 . . . 6-13
6.1.9.C F1554 – Grade 105 . . . 6-13
6.1.9.D ASTM F 3125 GR A490 & GR F2280 . . . 6-13
6.1.9.E A354–Grade BD . . . 6-13
6.1.10 Bending Steel . . . 6-14

6.2 Girder Bridges . . . 6-15
6.2.1 General . . . 6-15
6.2.2 I-Girders . . . 6-15
6.2.3 Tub or Box Girders . . . 6-16
6.2.4 Fracture Critical Superstructures . . . 6-17

6.3 Design of I-Girders . . . 6-18
6.3.1 Limit States for AASHTO LRFD Bridge Design Specifications . . . 6-18
6.3.2 Composite Section . . . 6-18
6.3.3 Flanges . . . 6-18
6.3.4 Webs . . . 6-19
6.3.5 Transverse Stiffeners . . . 6-19
6.3.6 Longitudinal Stiffeners . . . 6-20
6.3.7 Bearing Stiffeners . . . 6-20
6.3.8 Cross Frames . . . 6-20
6.3.9 Bottom Laterals . . . 6-23
6.3.10 Bolted Field Splice for Girders . . . 6-24
6.3.11 Camber . . . 6-25
6.3.12 Bridge Deck Placement Sequence . . . 6-27
6.3.13 Bridge Bearings for Steel Girders . . . 6-27

6.3.14 Surface Roughness and Hardness . . . 6-27
6.3.15 Welding . . . 6-29
6.3.16 Shop Assembly . . . 6-30
6.4 Plan Details . . . 6-31
6.4.1 General . . . 6-31
6.4.2 Structural Steel Notes . . . 6-31
6.4.3 Framing Plan . . . 6-31
6.4.4 Girder Elevation . . . 6-32
6.4.5 Typical Girder Details . . . 6-32
6.4.6 Cross Frame Details . . . 6-32
6.4.7 Camber Diagram and Bearing Stiffener Rotation . . . 6-33
6.4.8 Bridge Deck . . . 6-33
6.4.9 Handrail Details, Inspection Lighting, and Access . . . 6-33
6.4.10 Box Girder Details . . . 6-34
6.5 Shop Plan Review . . . 6-36
6.6 Painting of Existing Steel Bridges . . . 6-37
6.6.1 General . . . 6-37
6.6.2 Vertical Analysis . . . 6-38
6.6.3 Horizontal Analysis . . . 6-39
6.6.4 Special Considerations . . . 6-41
6.6.4.A Coast Guard . . . 6-41
6.6.4.B Moveable Spans . . . 6-41
6.6.4.C Traffic Control . . . 6-42
6.6.4.D Review of Construction Submittals . . . 6-42
6.6.4.E Structural Steel Repairs . . . 6-42
6.6.5 Quantities and Estimates . . . 6-43
6.7 Corrosion of Steel Foundations and Buried Structures . . . 6-44
6.7.1 Corrosion of Steel Foundations . . . 6-44
6.7.2 Corrosion and Abrasion of Metal Buried Structures . . . 6-45
6.7.2.A Corrosion . . . 6-46
6.7.2.B Steel Structures . . . 6-46
6.7.2.C Aluminum Alloy Structures . . . 6-47
6.7.2.D Alternative Coatings and Mitigation for De-icing Salts . . . 6-49
6.7.2.E Abrasion . . . 6-49
6.8 Bridge Standard Drawings . . . 6-51
6.99 References . . . 6-52

Chapter 7 Substructure Design

7.1 General Substructure Considerations 7-1
7.1.1 Foundation Design Process 7-1
7.1.1.A Scoping Level Design 7-1
7.1.1.B Develop Site Data and Preliminary Bridge Plan 7-1
7.1.1.C Preliminary Foundation Design 7-2
7.1.1.D Structural Analysis and Modeling 7-2
7.1.1.E Final Foundation Design 7-3
7.1.2 Foundation Design Limit States 7-3
7.1.3 Seismic Design 7-3
7.1.4 Substructure and Foundation Loads 7-3
7.1.5 Concrete Class for Substructure 7-6
7.1.6 Foundation Seals 7-6
7.1.6.A General Seal Criteria 7-7
7.1.6.A.1 Seal Vent Elevation 7-7
7.1.6.A.2 Scour 7-7
7.1.6.B Spread Footing Seals 7-7
7.1.6.B.1 When a Seal is Required During Construction 7-7
7.1.6.B.2 When a Seal May Not Be Required for Construction 7-7
7.1.6.C Deep Foundation Seals 7-8
7.1.7 Scour Requirements 7-8
7.1.7.A Shallow Foundations 7-10
7.1.7.B Deep Foundations 7-10
7.1.7.C Walls Adjacent to Structures 7-12
7.1.7.D Existing Structures 7-12
7.1.7.E Buried Structures 7-12
7.2 Foundation Modeling for Seismic Loads 7-13
7.2.1 General 7-13
7.2.2 Substructure Elastic Dynamic Analysis Procedure 7-13
7.2.3 Bridge Model Section Properties 7-14
7.2.3.A Cracked Properties for Columns 7-14
7.2.3.B Shaft Properties 7-14
7.2.3.C Cast-in-Place Pile Properties 7-15
7.2.4 Bridge Model Verification 7-15
7.2.5 Deep Foundation Modeling Methods 7-16
7.2.5.A Method I – Equivalent Cantilever Column 7-16
7.2.5.B Method II – Equivalent Base Springs 7-16
7.2.5.C Method III – Non-Linear Soil Springs 7-16
7.2.5.D Spring Location (Method II) 7-17
7.2.5.E Boundary Conditions (Method II) 7-17
7.2.5.F Spring Calculation (Method II) 7-18
7.2.5.G Matrix Coordinate Systems (Method II) 7-18
7.2.5.H Matrix Coefficient Definitions (Method II) 7-19

7.2.5.I Group Effects . . . 7-20
7.2.5.J Shaft Caps and Pile Footings . . . 7-20
7.2.6 Lateral Analysis of Piles and Shafts . . . 7-20
7.2.6.A Determination of Tip Elevations. . . . 7-20
7.2.6.B Pile and Shaft Design for Lateral Loads . . . 7-23
7.2.7 Spread Footing Modeling . . . 7-24
7.3 Column Design . . . 7-27
7.3.1 General Design Considerations . . . 7-27
7.3.2 Slenderness Effects . . . 7-27
7.3.2.A Moment Magnification Method . . . 7-28
7.3.2.B Second-Order Analysis . . . 7-29
7.3.2.B.1 Design Methods for a Second-Order Analysis . . . 7-29
7.3.2.B.2 Applying Factored Loads . . . 7-29
7.3.2.B.3 Member Properties . . . 7-29
7.3.3 Shear Design . . . 7-30
7.3.4 Column Silos . . . 7-30
7.3.4.A General Design and Detailing Requirements . . . 7-30
7.3.4.B Column Silos Formed From Extending Shaft Casing . . . 7-30
7.3.4.C Column Silos Formed by Other Methods . . . 7-30
7.3.4.D Column Silo Covers and Access Hatches . . . 7-31
7.3.5 Column Reinforcement . . . 7-32
7.3.5.A Reinforcing Bar Material . . . 7-32
7.3.5.B Longitudinal Reinforcement. . . . 7-32
7.3.5.C Longitudinal Splices . . . 7-32
7.3.5.D Longitudinal Development. . . . 7-33
7.3.5.D.1 Crossbeams . . . 7-33
7.3.5.D.2 Footings . . . 7-35
7.3.5.D.3 Shafts . . . 7-36
7.3.5.E Transverse Reinforcement . . . 7-37
7.3.5.F Spiral Splices and Hoops . . . 7-40
7.3.6 Column and Wall Pier Hinges . . . 7-42
7.3.7 Reduced Column Section . . . 7-43
7.3.7.A Inner Concrete Column . . . 7-44
7.3.7.A.1 Longitudinal Reinforcement . . . 7-44
7.3.7.A.2 Transverse Reinforcement . . . 7-45
7.3.7.A.3 Analytical Plastic Hinge Region . . . 7-45
7.3.7.B Outer Concrete Column . . . 7-45
7.3.7.C Gap in Concrete at Reduced Column Section . . . 7-46
7.4 Crossbeams . . . 7-47
7.4.1 General Design . . . 7-47
7.4.1.A Stage I Design. . . . 7-47
7.4.1.B Stage II Design . . . 7-48
7.4.1.C Other Crossbeam Types . . . 7-49

7.5 Abutment Design and Details . . . 7-50
7.5.1 General . . . 7-50
7.5.1.A Abutment Types . . . 7-50
7.5.1.A.1 Stub Abutments . . . 7-50
7.5.1.A.2 Cantilever Abutments . . . 7-51
7.5.1.A.3 Rigid Frame Abutments . . . 7-51
7.5.1.A.4 Bent-Type Abutments . . . 7-52
7.5.1.A.5 Isolated Abutments . . . 7-53
7.5.2 Abutments Supported By Mechanically-Stabilized Earth Walls . . . 7-54
7.5.2.A Single-span Bridges with Precast Slab Superstructures Supported Directly on Reinforced Soil . . . 7-55
7.5.2.B Bridges with spread footing abutments supported by a geosynthetic wall or SE wall . . . 7-58
7.5.3 Embankment at Abutments . . . 7-59
7.5.4 Abutment Loading . . . 7-60
7.5.4.A Dead Load - DC . . . 7-60
7.5.4.B Live Load - LL . . . 7-60
7.5.4.C Earth Pressure - EH, EV . . . 7-60
7.5.4.D Earthquake Load - EQ . . . 7-60
7.5.4.E Bearing Forces - TU . . . 7-60
7.5.5 Temporary Construction Load Cases . . . 7-61
7.5.5.A Superstructure Built after Backfill at Abutment . . . 7-61
7.5.5.B Wing Wall Overturning . . . 7-61
7.5.6 Abutment Bearings and Girder Stops . . . 7-61
7.5.6.A Abutment Bearings . . . 7-61
7.5.6.B Bearing Seats . . . 7-62
7.5.6.C Transverse Girder Stops . . . 7-62
7.5.7 Abutment Expansion Joints . . . 7-63
7.5.8 Open Joint Details . . . 7-63
7.5.9 Construction Joints . . . 7-65
7.5.10 Abutment Wall Design . . . 7-65
7.5.10.A General . . . 7-65
7.5.10.B Temperature and Shrinkage Reinforcement . . . 7-65
7.5.10.C Cross Ties . . . 7-66
7.5.11 Drainage and Backfilling . . . 7-67
7.6 Abutment Wing Walls and Curtain Walls . . . 7-69
7.6.1 Traffic Barrier Loads . . . 7-69
7.6.2 Wing Wall Design . . . 7-69
7.6.3 Wing Wall Detailing . . . 7-69
7.7 Footing Design . . . 7-70
7.7.1 General Footing Criteria . . . 7-70
7.7.1.A Minimum Cover and Footing Depth . . . 7-70
7.7.1.B Pedestals . . . 7-71

7.7.2 Loads and Load Factors . . . 7-71
7.7.3 Geotechnical Report Summary . . . 7-72
7.7.3.A Bearing Resistance - Service, Strength, and Extreme Event Limit States . . . 7-72
7.7.3.B Sliding Resistance - Strength and Extreme Event Limit States . . . 7-72
7.7.3.C Foundation Springs - Extreme Event Limit States . . . 7-72
7.7.4 Spread Footing Design . . . 7-73
7.7.4.A Abutment Spread Footing Force Diagram . . . 7-73
7.7.4.B Bearing Stress . . . 7-74
7.7.4.C Failure By Sliding . . . 7-76
7.7.4.D Overturning Stability . . . 7-76
7.7.4.E Footing Settlement . . . 7-76
7.7.4.F Concrete Design . . . 7-77
7.7.4.F.1 Footing Thickness and Shear . . . 7-77
7.7.4.F.2 Footing Force Distribution . . . 7-77
7.7.4.F.3 Vertical Reinforcement (Column or Wall) . . . 7-77
7.7.4.F.4 Bottom Reinforcement . . . 7-77
7.7.4.F.5 Top Reinforcement . . . 7-78
7.7.4.F.6 Shrinkage and Temperature Reinforcement . . . 7-78
7.7.5 Pile-Supported Footing Design . . . 7-78
7.7.5.A Pile Embedment, Clearance, and Rebar Mat Location . . . 7-79
7.7.5.B Concrete Design . . . 7-79

7.8 Shafts . . . 7-80
7.8.1 Axial Resistance . . . 7-80
7.8.1.A Embankment Consolidation Downdrag . . . 7-82
7.8.1.B Seismic Liquefaction Downdrag . . . 7-82
7.8.1.C Scour . . . 7-82
7.8.1.D Axial Resistance Group Reduction Factors . . . 7-83
7.8.2 Structural Design and Detailing . . . 7-84

7.9 Piles and Piling . . . 7-92
7.9.1 Pile Types . . . 7-92
7.9.1.A Cast-in-place Concrete Piles . . . 7-92
7.9.1.B Structural Steel Pipe Piles . . . 7-92
7.9.1.C Steel H Piles . . . 7-92
7.9.1.D Timber Piles . . . 7-92
7.9.1.E Steel Sheet Piles . . . 7-92
7.9.2 Single Pile Axial Resistance . . . 7-93
7.9.3 Block Failure . . . 7-94
7.9.4 Pile Uplift . . . 7-94
7.9.5 Pile Spacing . . . 7-94
7.9.6 Structural Design and Detailing of CIP Concrete Piles . . . 7-94
7.9.7 Pile Splices . . . 7-95

7.9.8 Pile Lateral Design 7-96
7.9.9 Battered Piles 7-96
7.9.10 Pile Tip Elevations and Quantities 7-96
7.9.11 Plan Pile Resistance 7-97
7.10 Concrete-Filled Steel Tubes 7-98
7.10.1 Scope 7-98
7.10.2 Design Requirements 7-99
7.10.2.A Materials 7-99
7.10.2.B Limit States 7-99
7.10.2.C General Dimensions 7-100
7.10.2.D Stiffness 7-100
7.10.2.E Flexure and Axial Resistance 7-100
7.10.2.F Stability Considerations for Unbraced of Partially-braced Members . . 7-103
7.10.2.G Shear Resistance 7-103
7.10.2.H Corrosion 7-103
7.10.2.I Side resistance 7-103
7.10.3 CFST-to-Cap Annular Ring Connections 7-103
7.10.3.A Annular Ring 7-104
7.10.3.B Embedment 7-106
7.10.3.C Punching Shear 7-106
7.10.3.D Pile Cap and/or Cap Beam Reinforcement 7-106
7.10.4 CFST-to-Cap Reinforced Concrete Connections 7-108
7.10.4.A CFST Requirements 7-108
7.10.4.B Embedment and Concrete Cover 7-109
7.10.4.C Pile Cap and/or Cap Beam Reinforcement 7-110
7.10.5 RCFST-to-Column and CFST-to Column Connections 7-110
7.10.6 Partially-filled CF*S*T 7-112
7.10.7 Construction Requirements 7-112
7.10.8 Notation 7-113
7.11 Bridge Standard Drawings 7-115
7.12 Appendices 7-116
Appendix 7.3-A2 Noncontact Lap Splice Length Column to Shaft Connections 7-117
Appendix 7-B1 Linear Spring Calculation Method II (Technique I) 7-119
Appendix 7-B2 Pile Footing Matrix Example Method II (Technique I) 7-124
Appendix 7-B3 Non-Linear Springs Method III 7-127
7.99 References 7-129

Chapter 8 Walls and Buried Structures

8.1 Retaining Walls 8-1
8.1.1 General 8-1
8.1.2 Common Types of Retaining Walls 8-2
8.1.2.A Preapproved Proprietary Walls 8-2
8.1.2.A.1 Structural Earth Walls (SE) 8-2
8.1.2.A.2 Other Proprietary Walls 8-3
8.1.2.B Geosynthetic Wrapped Face Walls 8-3
8.1.2.C Reinforced Concrete Walls 8-3
8.1.2.D Soldier Pile Walls and Soldier Pile Tieback Walls 8-3
8.1.2.E Soil Nail Walls 8-3
8.1.3 General Design Considerations 8-4
8.1.4 Design of Reinforced Concrete Retaining Walls 8-4
8.1.4.A Standard Reinforced Concrete Retaining Walls 8-4
8.1.4.A.1 Standard Cast-In-Place Reinforced Concrete Retaining Wall Types 1 through 8 8-4
8.1.4.A.2 Standard Precast Reinforced Concrete Retaining Wall . . . 8-5
8.1.4.B Non-Standard Reinforced Concrete Retaining Walls 8-6
8.1.4.B.1 Bearing Resistance, Eccentricity, and Sliding Stability 8-7
8.1.4.B.2 Application of Lateral Loads 8-7
8.1.4.B.3 Application of Collision Loads 8-7
8.1.4.B.4 Wall Footing Structural Design 8-7
8.1.4.B.5 Wall Stem Structural Design 8-8
8.1.5 Design of Cantilever Soldier Pile and Soldier Pile Tieback Walls 8-10
8.1.5.A Ground Anchors (Tiebacks) 8-10
8.1.5.B Design of Soldier Pile (discrete vertical elements) 8-11
8.1.5.B.1 Application of Lateral Loads 8-11
8.1.5.B.2 Determining Depth of Pile Embedment 8-11
8.1.5.B.3 Soldier Pile Shaft Backfill 8-11
8.1.5.C Design of Lagging 8-12
8.1.5.C.1 Temporary Timber Lagging 8-12
8.1.5.C.2 Permanent Lagging 8-12
8.1.5.D Design of Fascia Panels 8-13
8.1.6 Design of Structural Earth Walls 8-13
8.1.6.A Preapproved Proprietary Structural Earth Walls 8-14
8.1.6.B Non-Preapproved Proprietary Structural Earth Walls 8-14
8.1.7 Design of Geosynthetic Walls 8-14
8.1.7.A Standard Geosynthetic Wrapped Face Walls 8-14
8.1.7.B Non-Standard Geosynthetic Walls 8-14
8.1.8 Design of Soil Nail Walls 8-15
8.1.9 Design of Shaft Walls 8-15

8.1.10 Scour of Retaining Walls . . . 8-15
8.1.11 Miscellaneous Items . . . 8-18
8.1.11.A Architectural Finishes and Top of Wall Profile . . . 8-18
8.1.11.B Worker Fall Protection . . . 8-18
8.1.11.C Pedestrian and Bicycle Railings for Fall Protection . . . 8-18
8.1.11.D Drainage . . . 8-18
8.1.11.E Expansion, Contraction and Construction Joints . . . 8-19
8.1.11.E.1 Expansion Joints . . . 8-19
8.1.11.E.2 Contraction Joints . . . 8-20
8.1.11.E.3 Construction Joints . . . 8-20
8.1.11.F Detailing of Standard Reinforced Concrete Retaining Walls . . . 8-20
8.1.11.G Embankment Widening at End of Wall . . . 8-20
8.1.11.H Wall Face Embedment . . . 8-20

8.2 Noise Barrier Walls . . . 8-21
8.2.1 General . . . 8-21
8.2.2 Loads . . . 8-21
8.2.3 Design . . . 8-22
8.2.3.A Standard Plan Noise Barrier Walls . . . 8-22
8.2.3.B Non-Standard Noise Barrier Walls . . . 8-24

8.3 Buried Structures . . . 8-25
8.3.1 General Policy . . . 8-25
8.3.2 WSDOT Templates and Standard Plans . . . 8-26
8.3.2.A Buried Structure Templates . . . 8-26
8.3.2.B Buried Structure Standard Plans . . . 8-26
8.3.3 General Design Requirements . . . 8-27
8.3.3.A Design Delivery Methods . . . 8-27
8.3.3.A.1 Contractor Supplied Design . . . 8-27
8.3.3.A.2 Agency Supplied Design . . . 8-27
8.3.3.A.3 Design Build . . . 8-28
8.3.3.B Application of Loads . . . 8-28
8.3.3.B.1 Live Load, LL . . . 8-28
8.3.3.C Deck Protection and Approach Slabs . . . 8-29
8.3.3.D Buried Structure Foundation Design . . . 8-29
8.3.3.E Buried Structure Wingwall and Headwall Design . . . 8-29
8.3.3.F Worker, Pedestrian and Bicycle Fall Protection . . . 8-30
8.3.3.G W-Beam Guardrail on Buried Structures (TL-3) . . . 8-30
8.3.3.H Buried Structure Seismic Design . . . 8-30
8.3.3.H.1 Seismic Loading Effects . . . 8-31
8.3.3.H.2 Load Combinations for Transient Seismic Motion . . . 8-32
8.3.3.H.3 Attenuation of Peak Ground Motion Parameters . . . 8-32
8.3.3.I Load Rating . . . 8-33
8.3.3.J Usage of Buried Structure Design Software and/or Spreadsheets . . . 8-33

8.3.3.K Buried Structure Standard Plans . . . 8-34
8.3.3.K.1 Split Boxes Structures . . . 8-37
8.3.3.K.2 Three-Sided Structures . . . 8-38
8.3.4 Materials . . . 8-39
8.3.4.A Concrete . . . 8-39
8.3.4.B Reinforcing Steel . . . 8-39
8.3.4.C Bedding and Leveling Material . . . 8-39
8.3.4.C.1 Precast Reinforced Concrete Buried Structure – Three-Sided . . . 8-39
8.3.4.C.2 Precast Reinforced Concrete Buried Structure – Split Box 8-39
8.3.4.C.3 Precast Reinforced Concrete Retaining Walls (Wingwalls) . . . 8-40
8.3.4.D Joint Sealant and External Sealing Bands . . . 8-40
8.3.4.E Corrosion . . . 8-40
8.3.4.E.1 Metal Structural Plate Structures . . . 8-40
8.3.4.E.2 Concrete Structures . . . 8-40
8.3.5 Limit States and Design Methodologies . . . 8-40
8.3.5.A Service Limit State . . . 8-40
8.3.5.A.1 Total and Differential Settlement . . . 8-40
8.3.5.A.2 Deflection and Shear Transfer . . . 8-41
8.3.5.A.3 Control of Cracking . . . 8-41
8.3.5.B Strength Limit State . . . 8-41
8.3.5.C Extreme Limit State . . . 8-41
8.3.5.D Boundary Conditions . . . 8-42
8.3.5.E Structural Modeling . . . 8-42
8.3.5.E.1 Three-Sided Structures . . . 8-42
8.3.5.E.2 Split Box Structures . . . 8-42
8.3.5.E.3 Split Box ~ Slab Structures . . . 8-44
8.3.6 Provisions for Structure Type . . . 8-44
8.3.6.A Concrete Box and Split Box Structures . . . 8-44
8.3.6.A.1 Precast Geometric Limitations . . . 8-44
8.3.6.A.2 Distribution of Live Load through Earth Fill . . . 8-46
8.3.6.A.3 Joint Design and Details . . . 8-46
8.3.6.B Concrete Three-Sided Structures . . . 8-47
8.3.6.B.1 Precast Geometric Limitations . . . 8-47
8.3.6.B.2 Distribution of Live Load through Earth Fill . . . 8-48
8.3.6.B.3 Joint Design and Details . . . 8-48
8.3.6.C Design of Metal Structural Plate Structures . . . 8-48
8.3.7 Design of Detention Vaults . . . 8-49
8.3.8 Design of Tunnels . . . 8-51
8.4 Bridge Standard Drawings . . . 8-53
8.5 Appendices . . . 8-55
8.99 References . . . 8-56
Appendix 8.1-A1 Summary of Design Specification Requirements for Walls . . . 8-58

Chapter 9 Bearings and Expansion Joints

9.1 Expansion Joints 9-1
9.1.1 General Considerations 9-1
9.1.1.A Concrete Bridges 9-2
9.1.1.B Steel Bridges 9-2
9.1.2 General Design Criteria 9-3
9.1.2.A Shrinkage Effects 9-3
9.1.2.B Thermal Effects 9-3
9.1.3 Small Movement Range Joints 9-5
9.1.3.A Compression Seals 9-5
9.1.3.B Rapid-Cure Silicone Sealants 9-6
9.1.3.C Asphaltic Plug Joints 9-8
9.1.3.D Headers 9-9
9.1.3.E Bridge Paving Joint Seals 9-9
9.1.4 Medium Movement Range Joints 9-9
9.1.4.A Steel Sliding Plate Joints 9-9
9.1.4.B Strip Seal Joints 9-10
9.1.4.C Bolt-down Panel Joints 9-11
9.1.5 Large Movement Range Joints 9-12
9.1.5.A Steel Finger Joints 9-12
9.1.5.B Modular Expansion Joints 9-13
9.1.5.B.1 Operational Characteristics 9-13
9.1.5.B.2 Movement Design 9-15
9.1.5.B.3 Review of Shop Drawings and Structural Design Calculations 9-16
9.1.5.B.4 Construction Considerations 9-17

9.2 Bearings 9-18
9.2.1 General Considerations 9-18
9.2.2 Force Considerations 9-18
9.2.3 Movement Considerations 9-19
9.2.3.A Elastomeric and Fabric Pad Bearings 9-19
9.2.3.B HLMR Bearings 9-19
9.2.4 Detailing Considerations 9-19
9.2.5 Bearing Types 9-20
9.2.5.A Elastomeric Bearings 9-20
9.2.5.B Fabric Pad Sliding Bearings 9-22
9.2.5.B.1 Fabric Pad Design 9-23
9.2.5.B.2 PTFE 9-23
9.2.5.C Pin Bearings 9-24
9.2.5.D Rocker and Roller Type Bearings 9-24
9.2.5.E Spherical Bearings 9-24
9.2.5.F Disk Bearings 9-25

9.2.6 Miscellaneous Details . . . 9-25
9.2.6.A Temporary Support before Grouting Masonry Plate . . . 9-25
9.2.6.A.1 Shim Packs . . . 9-25
9.2.6.A.2 Two-step Grouting with Cast Sleeves . . . 9-25
9.2.6.B Anchor Bolts . . . 9-26
9.2.7 Contract Drawing Representation . . . 9-26
9.2.8 Shop Drawing Review . . . 9-26
9.2.9 Bearing Replacement Considerations . . . 9-26
9.3 Seismic Isolation Bearings . . . 9-27
9.3.1 General Considerations . . . 9-27
9.3.2 Suitability and Selection Considerations . . . 9-27
9.3.3 General Design Criteria . . . 9-28
9.3.4 Seismic Isolation Bearing Submittal Requirements . . . 9-28
9.3.4.A Shop Drawings . . . 9-29
9.3.4.B Bearing Materials and Fabrication . . . 9-29
9.3.4.C Paint . . . 9-29
9.3.4.D Bearing Specifications . . . 9-29
9.3.4.E Fabrication . . . 9-29
9.3.5 Seismic Isolation Bearing Review Process . . . 9-29
9.3.5.A Design Calculations . . . 9-30
9.3.5.B Shop Drawings . . . 9-30
9.3.6 Seismic Isolation Bearing Inspection . . . 9-31
9.3.6.A Fabrication Inspection . . . 9-31
9.3.6.B Field Inspection . . . 9-31
9.4 Bridge Standard Drawings . . . 9-32
9.4.1 Expansion Joints . . . 9-32

Chapter 10 Signs, Barriers, Approach Slabs, and Utilities

10.1 Sign and Luminaire Supports 10-1
10.1.1 Loads 10-1
10.1.1.A General 10-1
10.1.1.B Dead Loads 10-1
10.1.1.C Live Load 10-1
10.1.1.D Wind Loads 10-1
10.1.1.E Fatigue Design 10-2
10.1.1.F Ice and Snow Loads 10-2
10.1.1.G Group Load Combinations 10-2
10.1.1.H Impact Loads 10-3
10.1.2 Bridge Mounted Signs 10-3
10.1.2.A Vertical Clearance 10-3
10.1.2.B Geometrics 10-4
10.1.2.C Aesthetics 10-5
10.1.2.D Sign Placement 10-5
10.1.2.E Installation 10-6
10.1.2.F Installing/Replacing New Sign on Existing Bracket Supports 10-6
10.1.2.G Detailing 10-7
10.1.3 Monotube Sign Structures Mounted on Bridges 10-7
10.1.3.A Design Loads 10-7
10.1.3.B Vertical Clearance 10-7
10.1.3.C Geometrics 10-7
10.1.4 Monotube Sign Structures 10-8
10.1.4.A Sign Bridge Conventional Design 10-8
10.1.4.B Cantilever Conventional Design 10-8
10.1.4.C Balanced Cantilever Conventional Design 10-10
10.1.4.D VMS Installation 10-10
10.1.4.E Monotube Sheet Guidelines 10-11
10.1.4.F Monotube Quantities 10-11
10.1.5 Foundations 10-11
10.1.5.A Monotube Sign Structure Foundation Types 10-11
10.1.5.B Luminaire, Signal Standard, and Camera Pole Foundation Types 10-12
10.1.5.C Foundation Design 10-12
10.1.5.C.1 Monotube Sign Structures Foundation Type 1 Design . . 10-13
10.1.5.C.2 Monotube Sign Structures Foundation Type 2 and 3 . . . 10-13
10.1.5.C.3 Monotube Sign Structures Non-Conventional Design Foundations 10-13
10.1.5.C.4 Signal Foundation Design 10-13
10.1.5.D Foundation Quantities 10-14

10.2 Bridge Traffic Barriers . . . 10-15
10.2.1 General Guidelines . . . 10-15
10.2.2 Bridge Railing Test Levels . . . 10-16
10.2.3 Available WSDOT Designs . . . 10-16
10.2.3.A Service Level 1 (SL-1) Weak Post Guardrail (TL-2) . . . 10-16
10.2.3.B Texas T-411 Aesthetic Concrete Baluster (TL-2) . . . 10-17
10.2.3.C Traffic Barrier – 32″ F-Shape (TL-3) . . . 10-17
10.2.3.D Traffic Barrier – 34″ Single Slope (TL-3) . . . 10-18
10.2.3.E Oregon 3-Tube Curb Mounted Traffic Barrier (TL-4) . . . 10-19
10.2.3.F Traffic Barrier – 42″ F-Shape (TL-4 and TL-5) . . . 10-19
10.2.3.G Traffic Barrier – 42″ Single Slope (TL-4 and TL-5) . . . 10-20
10.2.4 Design Criteria . . . 10-20
10.2.4.A Design Values . . . 10-20
10.2.4.B Geometry . . . 10-21
10.2.4.C Standard Detail Sheet Modifications . . . 10-21
10.2.4.D Miscellaneous Design Information . . . 10-22

10.3 At Grade Concrete Barriers . . . 10-24
10.3.1 Differential Grade Concrete Barriers . . . 10-24
10.3.1.A Differential Grade Concrete Barriers . . . 10-24
10.3.2 Traffic Barrier Moment Slab . . . 10-25
10.3.2.A General . . . 10-25
10.3.2.B Guidelines for Moment Slab Design . . . 10-26
10.3.2.B.1 Structural Capacity . . . 10-26
10.3.2.B.2 Global Stability . . . 10-26
10.3.2.B.3 Minimum and Maximum Dimensions . . . 10-27
10.3.2.B.4 Sliding of the Barrier . . . 10-27
10.3.2.B.5 Overturning of the Barrier . . . 10-28
10.3.2.C Guidelines for the Soil Reinforcement . . . 10-28
10.3.2.D Design of the Wall Panel . . . 10-28
10.3.3 Precast Concrete Barrier . . . 10-29
10.3.3.A Concrete Barrier Type F and Type 2 . . . 10-29
10.3.3.B Concrete Barrier Type F Narrow Base and Concrete Barrier Type 4 . . . 10-29

10.4 Bridge Traffic Barrier Rehabilitation . . . 10-30
10.4.1 Policy . . . 10-30
10.4.2 Guidelines . . . 10-30
10.4.3 Design Criteria . . . 10-30
10.4.4 WSDOT Bridge Inventory of Bridge Rails . . . 10-31
10.4.5 Available Retrofit Designs . . . 10-32
10.4.5.A Washington Thrie Beam Retrofit of Concrete Balusters . . . 10-32
10.4.5.B Delaware Thrie Beam Guardrail . . . 10-32
10.4.5.C Concrete Parapet Retrofit . . . 10-32
10.4.5.D SL-1 Weak Post . . . 10-32

10.4.6 Available Replacement Designs . . . 10-32
10.4.6.A Traffic Barrier – Shape F Retrofit . . . 10-32
10.5 Bridge Railing . . . 10-33
10.5.1 Design . . . 10-33
10.5.2 Railing Types . . . 10-33
10.5.2.A Bridge Pedestrian Railing Type BP-10 . . . 10-33
10.5.2.B Bridge Pedestrian Railing Type BP-22 . . . 10-33
10.5.2.C Bridge Pedestrian Railing Type BP-12 . . . 10-33
10.5.2.D Bridge Pedestrian Railing Type BP-54 . . . 10-34
10.5.2.E Bridge Railing Type Snow Fence . . . 10-34
10.5.2.F Bridge Railing Type Chain Link Fence . . . 10-34
10.6 Bridge Approach Slabs . . . 10-35
10.6.1 Notes to Region for Preliminary Plan . . . 10-36
10.6.2 Bridge Approach Slab Design Criteria . . . 10-36
10.6.3 Bridge Approach Slab Detailing . . . 10-36
10.6.4 Skewed Bridge Approach Slabs . . . 10-37
10.6.5 Approach Anchors and Expansion Joints . . . 10-39
10.6.6 Bridge Approach Slab Addition or Retrofit to Existing Bridges . . . 10-39
10.6.7 Bridge Approach Slab Staging . . . 10-41
10.7 Traffic Barrier on Bridge Approach Slabs . . . 10-42
10.7.1 Bridge Approach Slab over Wing Walls, Cantilever Walls or Geosynthetic Walls . . . 10-42
10.7.2 Bridge Approach Slab over SE Walls . . . 10-44
10.8 Utilities Installation on New and Existing Structures . . . 10-45
10.8.1 General Concepts . . . 10-45
10.8.1.A Responsibilities of the Utility Company . . . 10-45
10.8.1.B Confined Spaces . . . 10-45
10.8.1.C Coating and Corrosion Protection . . . 10-45
10.8.2 Utility Design Criteria . . . 10-48
10.8.2.A Utility Location . . . 10-48
10.8.2.B Termination at the Bridge Ends . . . 10-48
10.8.2.C Utility Expansion . . . 10-49
10.8.2.D Utility Blockouts . . . 10-49
10.8.2.E Gas Lines or Volatile Fluids . . . 10-49
10.8.2.F Water Lines . . . 10-49
10.8.2.G Sewer Lines . . . 10-50
10.8.2.H Electrical (Power and Communications) . . . 10-50
10.8.3 Box/Tub Girder Bridges . . . 10-50
10.8.4 Traffic Barrier Conduit . . . 10-51
10.8.5 Conduit Types . . . 10-51

10.8.6 Utility Supports 10-51
10.8.6.A Concrete Embedment 10-52
10.8.6.B Pipe Hangers. 10-52
10.8.6.C Surface Mounting 10-52
10.9 Review Procedure for Utility Installations on Existing Structures 10-53
10.9.1 Utility Review Checklist. 10-54
10.10 Anchors for Permanent Attachments 10-55
10.11 Drainage Design 10-56
10.11.1 Geometrics 10-56
10.11.2 Hydrology 10-56
10.11.3 On Bridge Systems 10-56
10.11.4 Construction 10-56
10.12 Bridge Security 10-57
10.12.1 General 10-57
10.12.2 Design. 10-57
10.12.3 Design Criteria 10-58
10.13 Temporary Bridges 10-59
10.13.1 General 10-59
10.13.2 Design. 10-59
10.13.2.A One To Two Construction Season Temporary Bridges 10-59
10.13.2.B Three To Five Construction Season Temporary Bridges. 10-59
10.13.2.B.1 Design Requirements 10-59
10.13.2.B.2 Seismic Design Requirements 10-60
10.13.2.B.3 Deck Design Requirements 10-60
10.13.2.B.4 Superstructure Design Requirements. 10-60
10.13.2.B.5 Foundation Design Requirements 10-60
10.13.3 NBI Requirements. 10-61
10.13.4 Submittal Requirements 10-61
10.14 Bridge Standard Drawings. 10-62
10.99 References 10-65

Chapter 11 Detailing Practice

11.1 Standard Office Practices 11-1
11.1.1 General 11-1
11.1.1.A Purpose 11-1
11.1.1.B Planning 11-1
11.1.1.C Drawing Orientation and Layout Control 11-1
11.1.1.D Annotation 11-2
11.1.1.D.1 Text and Labeling 11-2
11.1.1.D.2 Dimensioning 11-3
11.1.1.D.3 Callouts (See Figure 11.1.1-D6 below) 11-4
11.1.1.D.4 Key Notes (See Figure 11.1.1-D7 below) 11-5
11.1.1.E Line Work 11-7
11.1.1.F Scale 11-8
11.1.1.G Graphic Symbols 11-8
11.1.1.H Structural Sections, Views and Details 11-9
11.1.1.I Revisions 11-10
11.1.1.J Title Block 11-11
11.1.1.K Reinforcement Detailing 11-12
11.1.2 Bridge Office Standard Drawings and Office Examples 11-14
11.1.2.A General 11-14
11.1.2.B Use of Standards 11-14
11.1.2.C Maintenance of Standard Drawings 11-14
11.1.3 Typical Plan Set and Sheets 11-15
11.1.3.A Plan Sheet Organization 11-15
11.1.3.B Sheet Types 11-16
11.1.3.C Sheet Contents 11-17
11.1.3.D Wall Structure Sheets and Detailing Practices 11-22
11.1.3.D.1 Layout 11-22
11.1.3.D.2 Developed Elevation 11-22
11.1.3.D.3 Details 11-23
11.1.4 Electronic Plan Sharing Policy 11-23
11.1.5 Structural Steel 11-24
11.1.5.A General 11-24
11.1.5.B Bars 11-24
11.1.5.C Plates 11-24
11.1.5.D Strips 11-24
11.1.5.E Labeling 11-24
11.1.6 Aluminum Section Designations 11-25
11.1.7 Abbreviations 11-26
11.1.7.A General 11-26
11.1.7.B List of abbreviations commonly used on bridge plan sheets: 11-26

11.2 Appendices 11-34
Appendix 11.2-A1 Dimensional Callout Example 11-35
Appendix 11.2-A2 Typical Details 11-36
Appendix 11.2-A3 Typical Section Callouts 11-37
Appendix 11.2-A4 Reinforcement Callout Examples 11-38

Chapter 12 Quantities, Costs, and Specifications

12.1 Quantities - General . . . 12-1
12.1.1 Cost Estimating Quantities . . . 12-1
12.1.1.A Conceptual Stage . . . 12-1
12.1.1.B Preliminary Plan Stage . . . 12-1
12.1.1.C Design Stage . . . 12-1
12.1.1.D Final Contract Quantities . . . 12-1
12.1.2 Not Included in Bridge Quantities List . . . 12-1
12.2 Computation of Quantities . . . 12-2
12.2.1 Responsibilities . . . 12-2
12.2.1.A Design Unit . . . 12-2
12.2.1.B Bridge Project Support Unit . . . 12-2
12.2.2 Procedure for Computation . . . 12-2
12.2.3 Data Source . . . 12-3
12.2.4 Accuracy . . . 12-3
12.2.4.A Preliminary Quantities . . . 12-3
12.2.4.B Final Quantities . . . 12-3
12.2.5 Excavation . . . 12-3
12.2.5.A Structure Excavation, Class A . . . 12-3
12.2.5.B Special Excavation . . . 12-5
12.2.6 Shoring or Extra Excavation, Class A . . . 12-6
12.2.7 Piling . . . 12-8
12.2.8 Conduit Pipe . . . 12-8
12.2.9 Private Utilities Attached To Bridge Structures . . . 12-9
12.2.10 Drilled Shafts . . . 12-9
12.3 Construction Costs . . . 12-10
12.3.1 Introduction . . . 12-10
12.3.2 Factors Affecting Costs . . . 12-10
12.3.2.A Type of Structure . . . 12-10
12.3.2.B Location of Project Site . . . 12-10
12.3.2.C Size of Project Contract . . . 12-10
12.3.2.D Foundation Requirements . . . 12-10
12.3.2.E Sequencing of Project . . . 12-10
12.3.3 Development of Cost Estimates . . . 12-11
12.3.3.A Types . . . 12-11
12.3.3.A.1 Prospectus and Project Summary Estimates . . . 12-11
12.3.3.A.2 Preliminary Design Estimates . . . 12-11
12.3.3.A.3 Estimate Updates During Design . . . 12-11
12.3.3.A.4 Contract Estimates . . . 12-11

12.3.3.B Responsibilities . . . 12-12
12.3.3.B.1 Bridge Project Support Unit . . . 12-12
12.3.3.B.2 Designer . . . 12-12
12.3.3.C Documentation . . . 12-12
12.3.3.D Cost Data . . . 12-12
12.3.3.D.1 General . . . 12-12
12.3.3.D.2 Deck or Wall Face Area . . . 12-12
12.3.3.D.3 Bridge Widenings and New Bridges . . . 12-13
12.3.3.D.4 Bridge Rail Replacement . . . 12-13
12.3.3.D.5 Bridge Lengths With Unequal Wingwalls . . . 12-13
12.3.3.D.6 Retaining Walls . . . 12-13

12.4 Construction Specifications and Estimates . . . 12-14
12.4.1 General . . . 12-14
12.4.2 Definitions . . . 12-14
12.4.2.A *Standard Specifications* . . . 12-14
12.4.2.B Mandatory General Special Provisions . . . 12-14
12.4.2.C Special Provisions . . . 12-14
12.4.2.D Addendum . . . 12-14
12.4.2.E AD Copy . . . 12-14
12.4.2.F As defined in *Standard Specifications* Section 1-02.4 . . . 12-14
12.4.3 General Bridge S&E Process . . . 12-15
12.4.3.A Typical Reviews and Milestone Dates . . . 12-15
12.4.3.B Constructability Review Set Distribution . . . 12-15
12.4.3.C PS&E Review Set Distribution . . . 12-16
12.4.4 Reviewing Bridge Plans . . . 12-16
12.4.4.A Job File . . . 12-16
12.4.4.B PS&E Check List (Form 230-037 and Appendix 12.4-A1) . . . 12-16
12.4.4.C Summary of Quantities (Form 230-031 and Appendix 12.2-A1) . . . 12-17
12.4.4.D Plans . . . 12-17
12.4.4.E Not Included in Bridge Quantities List (Form 230-038 and Appendix 12.1-A1) . . . 12-17
12.4.4.F Geotechnical Report . . . 12-17
12.4.5 Preparing the Bridge Cost Estimates . . . 12-17
12.4.5.A General . . . 12-17
12.4.5.B Procedure . . . 12-18
12.4.6 Preparing the Bridge Specifications . . . 12-18
12.4.6.A General . . . 12-18
12.4.6.B Procedure . . . 12-18
12.4.7 Preparing the Bridge Working Day Schedule . . . 12-19
12.4.7.A General . . . 12-19
12.4.7.B Procedure . . . 12-19

12.4.8 Reviewing Projects Prepared by Consultants . . . 12-20
12.4.8.A General . . . 12-20
12.4.8.B Procedure . . . 12-20
12.4.9 Submitting the PS&E Package . . . 12-20
12.4.9.A General . . . 12-20
12.4.10 PS&E Review Period and Turn-in for AD Copy . . . 12-21
12.4.10.A Description . . . 12-21
12.4.10.B Procedure . . . 12-21
12.5 Appendices . . . 12-22
Appendix 12.1-A1 Not Included In Bridge Quantities List . . . 12-23
Appendix 12.2-A1 Bridge Quantities . . . 12-24
Appendix 12.3-A1 Structural Estimating Aids Construction Costs . . . 12-29
Appendix 12.3-A2 Structural Estimating Aids Construction Costs . . . 12-31
Appendix 12.3-A3 Structural Estimating Aids Construction Costs . . . 12-33
Appendix 12.3-A4 Structural Estimating Aids Construction Costs . . . 12-35
Appendix 12.3-B1 Cost Estimate Summary . . . 12-36
Appendix 12.4-A1 Special Provisions Checklist . . . 12-37
Appendix 12.4-A2 Structural Estimating Aids Construction Time Rates . . . 12-42
Appendix 12.4-B1 Construction Working Day Schedule . . . 12-44

Chapter 13 Bridge Load Rating

13.1 General . . . 13-1
13.1.1 LRFR Method per the MBE . . . 13-2
13.1.1.A Rating Equation . . . 13-2
13.1.1.B Condition Factor (φc_C) . . . 13-2
13.1.1.C System Factor (φ_S) . . . 13-3
13.1.1.D Dead and Live Load Factors . . . 13-3
13.1.1.E Live Load Factors for Legal and Permit Loads . . . 13-3
13.1.2 Load Factor Method (LFR) . . . 13-5
13.1.2.A Ultimate Method (LFR) . . . 13-5
13.1.2.A.1 Rating Equation . . . 13-5
13.1.2.B Dead and Live Load Factors . . . 13-5
13.1.2.C Impact (IM) . . . 13-5
13.1.2.D Resistance Factors (LFR) Method . . . 13-6
13.1.2.E Service Method (LFR) . . . 13-7
13.1.2.F Inventory Rating . . . 13-7
13.1.2.G Operating Rating . . . 13-7
13.1.3 Allowable Stress Method (ASD) . . . 13-7
13.1.4 Live Loads . . . 13-8
13.1.5 Rating Trucks . . . 13-8
13.1.5.A Design Trucks . . . 13-8
13.1.5.B Legal Trucks . . . 13-9
13.1.5.C Overload Trucks . . . 13-10
13.1.5.D Emergency Vehicles . . . 13-10
13.2 Special Rating Criteria . . . 13-11
13.2.1 Dead Loads . . . 13-11
13.2.2 Live Load Distribution Factors . . . 13-11
13.2.3 Reinforced Concrete Structures . . . 13-12
13.2.4 Prestressed Concrete Structures . . . 13-12
13.2.5 Concrete Decks . . . 13-12
13.2.6 Concrete Crossbeams . . . 13-12
13.2.7 In-Span Hinges . . . 13-12
13.2.8 Girder Structures . . . 13-13
13.2.9 Box Girder Structures . . . 13-13
13.2.10 Segmental Concrete Bridges . . . 13-13
13.2.11 Concrete Slab Structures . . . 13-13
13.2.12 Steel Structures . . . 13-13
13.2.13 Steel Floor Systems . . . 13-13
13.2.14 Steel Truss Structures . . . 13-13
13.2.15 Timber Structures . . . 13-14
13.2.16 Widened or Rehabilitated Structures . . . 13-14

13.2.17 Buried Structures 13-14
13.2.18 Overloads 13-15
13.2.19 Specialized Hauling Vehicles (SHVs) 13-15
13.3 Load Rating Software 13-17
13.4 Load Rating Reports 13-18
13.5 Structure Posting 13-19
13.6 Appendices 13-20
Appendix 13.6-A1 LFR Bridge Rating Summary 13-21
Appendix 13.6-A2 LRFR Bridge Rating Summary 13-22
13.99 References 13-23

Chapter 14 Accelerated and Innovative Bridge Construction

14.1 Introduction . . . 14-1
14.1.1 General . . . 14-1
14.1.2 ABC Methods . . . 14-2
14.2 Application of ABC . . . 14-3
14.2.1 Economics of ABC . . . 14-3
14.2.2 Practical Applications . . . 14-3
14.2.3 Prefabricated Bridge Elements and Systems . . . 14-4
14.2.3.A Prefabricated Bridge Elements . . . 14-4
14.2.3.B Prefabricated Systems . . . 14-5
14.2.4 Project Delivery Methods . . . 14-5
14.2.5 Decision Making Tools . . . 14-5
14.3 Structural Systems . . . 14-8
14.3.1 Precast Bent System Design for High Seismic Regions . . . 14-8
14.3.1.A Description of System . . . 14-9
14.3.1.B Design Philosophy . . . 14-10
14.3.1.C Design Provisions . . . 14-10
14.3.1.C.1 Socket-Type Footing Connections . . . 14-10
14.3.1.C.2 Drilled Shaft . . . 14-10
14.3.1.C.3 Precast Column . . . 14-10
14.3.1.D Geometry and General Requirements . . . 14-11
14.3.2 Geosynthetic Reinforced Soil Integrated Bridge System . . . 14-11
14.3.3 Precast Decks . . . 14-11
14.3.4 Link Slabs . . . 14-11
14.4 Innovative Bridge Construction . . . 14-12
14.4.1 Self-Centering Columns . . . 14-12
14.4.2 Shape Memory Alloy . . . 14-13
14.5 Shipping, Handling and Erection . . . 14-15
14.5.1 Lifting Devices . . . 14-15
14.5.2 Handling, Storage and Shipping . . . 14-15
14.5.3 Tolerances . . . 14-16
14.5.4 Assembly Plans . . . 14-16
14.5.5 Element Sizes . . . 14-17
14.6 Installation Method Options . . . 14-18
14.6.1 Lateral Slide Systems . . . 14-18
14.6.2 Self-Propelled Modular Transporter Systems . . . 14-18
14.7 Examples of Accelerated and Innovative Bridge Construction . . . 14-19

Chapter 15 Structural Design Requirements for Design-Build Contracts

15.1 Manual Description . . . 15-1
15.1.1 Purpose . . . 15-1
15.1.2 Specifications . . . 15-1
15.2 Bridge Configuration Criteria . . . 15-2
15.2.1 General . . . 15-2
15.2.1.A Structure Conceptual Plan . . . 15-2
15.2.1.B Bridge Redundancy . . . 15-2
15.2.1.C Bridge Deck Drainage . . . 15-2
15.2.2 Railroad Crossings . . . 15-2
15.2.2.A Clearances . . . 15-2
15.2.2.B Crash Walls . . . 15-2
15.2.2.C Substructure . . . 15-3
15.2.3 Temporary Bridges . . . 15-3
15.2.4 Inspection and Maintenance Access . . . 15-3
15.2.4.A General . . . 15-3
15.2.4.B Bearings . . . 15-3
15.2.4.C Safety Cables, Handrails, and Anchors . . . 15-3
15.2.4.D Abutment Slopes . . . 15-3
15.2.4.E Access and Lighting . . . 15-3
15.2.5 Bridge Types . . . 15-4
15.2.6 Aesthetic Design Elements . . . 15-4
15.2.7 Architectural Design Standards . . . 15-5
15.2.8 Methods . . . 15-5
15.2.9 Design-Builder Urban Design Team . . . 15-5
15.2.10 Analysis and Design Criteria for Structural Widenings and Modifications . . . 15-6
15.2.11 Bridge Security . . . 15-6
15.2.11.A General . . . 15-6
15.2.11.B Natural Surveillance and Territorial Reinforcement . . . 15-7
15.2.11.C Hard Armoring . . . 15-7
15.3 Load Criteria . . . 15-8
15.3.1 Scope . . . 15-8
15.3.2 Load Factors and Load Combinations . . . 15-8
15.3.3 Permanent Loads . . . 15-8
15.3.3.A Future Deck Overlay Requirement . . . 15-8
15.3.4 Live Loads . . . 15-9
15.3.4.A Design Live Load . . . 15-9
15.3.4.B Live Load Deflection Evaluation . . . 15-9

15.3.4.C Distribution to Superstructure 15-9
15.3.4.C.1 Cross sections a, b, c, e, k, and also i and j if sufficiently connected to act as a unit from LRFD-BDS Table 4.6.2.2.1-1 15-9
15.3.4.C.2 Cross section Type d from LRFD-BDS Table 4.6.2.2.1-1 15-10
15.3.4.C.3 Distribution to Substructure 15-10
15.3.4.C.4 Distribution to Crossbeam 15-10
15.3.5 Noise Barrier Walls 15-10
15.4 Seismic Design and Retrofit 15-11
15.4.1 General 15-11
15.4.2 WSDOT Additions and Modifications to AASHTO Guide Specifications for LRFD Seismic Bridge Design 15-11
15.4.2.A Definitions 15-11
15.4.2.B Earthquake Resisting Systems (ERS) Requirements for Seismic DesignCategories (SDCs) C and D 15-12
15.4.2.C Seismic Ground Shaking Hazard 15-13
15.4.2.D Selection of Seismic Design Category (SDC) 15-13
15.4.2.E Temporary and Staged Construction 15-14
15.4.2.F Load and Resistance Factors 15-14
15.4.2.G Balanced Stiffness Requirements and Balanced Frame Geometry Recommendation 15-14
15.4.2.H Selection of Analysis Procedure to Determine Seismic Demand 15-14
15.4.2.I Member Ductility Requirement for SDCs C and D 15-14
15.4.2.J Longitudinal Restrainers 15-14
15.4.2.K Abutments 15-15
15.4.2.K.1 4.2.11.1 - General 15-15
15.4.2.K.2 4.2.11.2 - Longitudinal Direction 15-15
15.4.2.K.3 4.2.11.2.1 - Abutment Stiffness and Passive Pressure Estimate 15-16
15.4.2.K.4 4.2.11.2.2 - Calculation of Best Estimate Passive Pressure Pp 15-16
15.4.2.K.5 4.2.11.2.3 - Calculation of Passive Soil Stiffness 15-17
15.4.2.K.6 4.2.11.3 - Transverse Direction 15-17
15.4.2.K.7 4.2.11.4 - Curved and Skewed Bridges 15-18
15.4.2.L Foundation – General 15-18
15.4.2.M Foundation – Spread Footing 15-18
15.4.2.N Procedure 3: Nonlinear Time History Method 15-18
15.4.2.O I_{eff} for Box Girder Superstructure 15-18
15.4.2.P Foundation Rocking 15-18
15.4.2.Q Drilled Shafts 15-18
15.4.2.R Longitudinal Direction Requirements 15-19
15.4.2.S Liquefaction Design Requirements 15-19
15.4.2.T Reinforcing Steel 15-19
15.4.2.U Concrete Modeling 15-19

15.4.2.V Expected Nominal Moment Capacity . . . 15-19
15.4.2.W Interlocking Bar Size . . . 15-19
15.4.2.X Splicing of Longitudinal Reinforcement in Columns Subject to DuctilityDemands for SDCs C and D. . . . 15-20
15.4.2.Y Development Length for Column Bars Extended into Oversized Pile Shafts for SDCs C and D . . . 15-20
15.4.2.Z Lateral Confinement for Oversized Pile Shaft for SDCs C and D . . . 15-20
15.4.2.AA Lateral Confinement for Non-Oversized Strengthened Pile Shaft for SDCs C and D. . . . 15-20
15.4.2.AB Requirements for Capacity Protected Members . . . 15-20
15.4.2.AC Superstructure Capacity Design for Transverse Direction (Integral Bent Cap) for SDCs C and D . . . 15-21
15.4.2.AD Superstructure Design for Non Integral Bent Caps for SDCs B, C, and D. . . . 15-21
15.4.2.AE Integral Bent Cap Joint Shear Design . . . 15-21
15.4.2.AF Cast-in-Place and Precast Concrete Piles . . . 15-21
15.4.2.AG Seismic Resiliency using Innovative Materials and Construction . . . 15-21
15.4.3 Seismic Design Requirements for Bridge Modifications and Widening Projects . . . 15-22
15.4.3.A Seismic Analysis and Retrofit Policy . . . 15-22
15.4.3.B Design and Detailing Considerations . . . 15-22
15.4.3.B.1 Support Length . . . 15-22
15.4.3.B.2 Connections Between Existing and New Elements . . . 15-22
15.4.3.B.3 Differential Settlement . . . 15-22
15.4.3.B.4 Foundation Types . . . 15-23
15.4.3.B.5 Existing Strutted Columns . . . 15-23
15.4.3.B.6 Non Structural Element Stiffness . . . 15-23
15.4.3.B.7 Isolation Bearings . . . 15-23
15.4.4 Seismic Retrofitting of Existing Bridges . . . 15-23
15.4.4.A Seismic Analysis Requirements . . . 15-24
15.4.4.B Seismic Retrofit Design . . . 15-24
15.4.4.C Earthquake Restrainers. . . . 15-24
15.4.4.D Isolation Bearings . . . 15-24
15.5 Concrete Structures . . . 15-25
15.5.1 General . . . 15-25
15.5.2 Materials . . . 15-25
15.5.2.A Concrete . . . 15-25
15.5.2.A.1 Cast-in-place (CIP) Concrete . . . 15-25
15.5.2.A.2 Modulus of Elasticity . . . 15-25
15.5.2.A.3 Shrinkage and Creep . . . 15-25
15.5.2.A.4 Grout. . . . 15-25
15.5.2.A.5 Mass Concrete . . . 15-26
15.5.2.A.6 Shotcrete . . . 15-26
15.5.2.A.7 Lightweight Aggregate Concrete. . . . 15-26

15.5.2.B Reinforcing Steel . . . 15-26
15.5.2.B.1 Grades . . . 15-26
15.5.2.B.2 Compressive Development Length . . . 15-26
15.5.2.B.3 Splices . . . 15-26
15.5.2.B.4 Welded Wire Reinforcement in Prestressed Concrete Girders,Walls, Barriers and Deck Panels . . . 15-27
15.5.2.B.5 Reinforcing Bar Dowels and Resin Bonded Anchors . . . 15-27
15.5.2.C Prestressing Steel . . . 15-27
15.5.2.D Post-Tensioning Systems . . . 15-27
15.5.3 Design Considerations . . . 15-28
15.5.3.A Service and Fatigue Limit States . . . 15-28
15.5.3.B Strength Limit State . . . 15-28
15.5.3.C Post-Tensioning . . . 15-28
15.5.4 Superstructures . . . 15-28
15.5.4.A Reinforced Concrete Superstructures . . . 15-28
15.5.4.B Box Girder Superstructures . . . 15-28
15.5.4.B.1 Intermediate Diaphragms for Curved Concrete Box Girder Bridges . . . 15-28
15.5.4.B.2 Temperature Effects . . . 15-29
15.5.4.B.3 Drains . . . 15-29
15.5.4.C Prestressed Concrete Girder Superstructures . . . 15-29
15.5.4.C.1 WSDOT Standard Girder Types and Construction Sequences . . . 15-29
15.5.4.C.2 Superstructure Continuity . . . 15-29
15.5.4.C.3 Continuous Structure Configuration . . . 15-29
15.5.4.C.4 Girder Ends . . . 15-29
15.5.4.C.5 Diaphragms . . . 15-30
15.5.4.C.6 Barrier and Sidewalk Load Distribution . . . 15-30
15.5.4.C.7 Composite Action . . . 15-30
15.5.4.C.8 Dead Loads . . . 15-30
15.5.4.C.9 Girder Stirrups . . . 15-30
15.5.4.C.10 Transformed Section Properties . . . 15-30
15.5.4.C.11 Deck Shrinkage . . . 15-31
15.5.4.C.12 Deck Girder Superstructures . . . 15-31
15.5.4.C.13 Slab Girders . . . 15-31
15.5.4.C.14 Deck Bulb-Tee Girders . . . 15-31
15.5.4.C.15 Wide Flange Deck Girders . . . 15-31
15.5.4.C.16 Wide Flange Thin Deck Girders . . . 15-31
15.5.4.C.17 Tub Girders . . . 15-31
15.5.4.C.18 Spliced Prestressed Concrete Girders . . . 15-32
15.5.5 Concrete Bridge Decks . . . 15-32
15.5.5.A Bridge Deck Requirements . . . 15-32
15.5.5.B Bridge Deck Reinforcement . . . 15-32
15.5.5.C Stay-in-Place (SIP) Deck Panels . . . 15-33
15.5.5.D Bridge Deck Protection . . . 15-33
15.5.5.E Bridge Deck HMA Paving . . . 15-33

15.6 Steel Structures 15-34
15.6.1 Design Considerations 15-34
15.6.1.A Codes, Specification, and Standards 15-34
15.6.1.B WSDOT Steel Bridge Practice 15-34
15.6.1.C Preliminary Girder Proportioning 15-34
15.6.1.D Bridge Steels 15-35
15.6.1.E Plate Sizes 15-35
15.6.1.F Fasteners 15-35
15.6.2 Girder Bridges 15-35
15.6.2.A Tub or Box Girders 15-35
15.6.2.B Fracture Critical Superstructures 15-36
15.6.3 Design of I-Girders 15-36
15.6.3.A Limit States for LRFD-BDS 15-36
15.6.3.B Composite Section 15-37
15.6.3.C Flanges 15-37
15.6.3.D Webs 15-37
15.6.3.E Transverse Stiffeners 15-37
15.6.3.F Longitudinal Stiffeners 15-38
15.6.3.G Bearing Stiffeners 15-38
15.6.3.H Cross Frames 15-38
15.6.3.I Bottom Laterals 15-38
15.6.3.J Bolted Field Splice for Girders 15-38
15.6.3.K Camber 15-39
15.6.3.L Bridge Deck Placement Sequence 15-40
15.6.3.M Bridge Bearings for Steel Girders 15-40
15.6.3.N Surface Roughness and Hardness 15-40
15.6.3.O Welding 15-40
15.6.3.P Shop Assembly 15-40
15.6.4 Plan Details 15-41
15.6.4.A General 15-41
15.6.4.B Framing Plan 15-41
15.6.4.C Girder Elevation 15-41
15.6.4.D Typical Girder Details 15-41
15.6.4.E Cross Frame Details 15-42
15.6.4.F Camber Diagram and Bearing Stiffener Rotation 15-42
15.6.4.G Bridge Deck 15-42
15.6.4.H Handrail Details, Inspection Lighting, and Access 15-43
15.6.4.I Box Girder Details 15-43
15.6.5 Painting of Existing Steel Bridges 15-43
15.6.6 Corrosion of Steel Foundations and Buired Structures 15-43

15.7 Substructure Design 15-44
15.7.1 General Substructure Considerations 15-44
15.7.1.A Foundation Seals 15-44
15.7.1.B Scour 15-44
15.7.1.C Combination of Extreme Event Effects 15-44
15.7.1.C.1 Downdrag 15-44
15.7.1.C.2 Lateral Ground Displacement 15-44
15.7.1.C.3 Scour 15-44
15.7.2 Foundation Modeling for Seismic Loads 15-44
15.7.2.A General 15-44
15.7.2.B Bridge Model Section Properties 15-44
15.7.2.B.1 Cracked Properties for Columns 15-44
15.7.2.B.2 Shaft Properties 15-45
15.7.2.B.3 Cast-in-Place Pile Properties 15-45
15.7.2.C Spread Footing Modeling Methods 15-45
15.7.2.D Deep Foundation Modeling Methods 15-45
15.7.2.D.1 Group Effects 15-45
15.7.2.D.2 Shaft Caps and Pile Footings 15-45
15.7.2.E Design of Deep Foundations for Lateral Forces 15-46
15.7.2.E.1 Determination of Tip Elevations 15-46
15.7.2.E.2 Design for Lateral Loads 15-46
15.7.3 Column Design 15-46
15.7.3.A Shear Design 15-46
15.7.3.B Column Silos 15-46
15.7.3.C Longitudinal Reinforcement 15-46
15.7.3.D Longitudinal Reinforcement Splices 15-46
15.7.3.E Longitudinal Reinforcement Development 15-47
15.7.3.E.1 Crossbeams 15-47
15.7.3.E.2 Footings 15-47
15.7.3.E.3 Drilled Shafts 15-47
15.7.3.F Transverse Reinforcement 15-47
15.7.3.F.1 General 15-47
15.7.3.F.2 Spiral Splices and Hoops 15-47
15.7.3.G Reduced Column Section 15-48
15.7.4 Crossbeam 15-48
15.7.5 Abutment Design and Details 15-48
15.7.5.A General 15-48
15.7.5.A.1 Bent-Type and Isolated Abutments 15-48
15.7.5.A.2 Abutments on Structural Earth (SE) Walls and Geosynthetic Walls 15-48

15.7.5.B Embankment and Backfill 15-48
15.7.5.B.1 General Clearances 15-48
15.7.5.B.2 Abutments on SE Walls and Geosynthetic Walls 15-48
15.7.5.B.3 Drainage and Backfill 15-49
15.7.5.C Abutment Loading 15-49
15.7.5.C.1 Earthquake Load 15-49
15.7.5.C.2 Bearing Forces 15-49
15.7.5.D Abutment Details 15-49
15.7.5.D.1 Bearing Seats 15-49
15.7.5.D.2 Transverse Girder Stops 15-49
15.7.5.D.3 Abutment Walls 15-49
15.7.6 Abutment Wing Walls and Curtain Walls 15-50
15.7.7 Footing Design 15-50
15.7.7.A General Footing Criteria 15-50
15.7.7.B Spread Footing Design 15-50
15.7.7.B.1 Foundation Design 15-50
15.7.7.B.2 Structural Design 15-50
15.7.7.C Pile-Supported Footing Design 15-50
15.7.7.C.1 Pile Embedment, Clearance, and Rebar Mat Location . . 15-50
15.7.7.C.2 Concrete Design 15-51
15.7.8 Shafts 15-51
15.7.8.A Axial Resistance 15-51
15.7.8.B Structural Design and Detailing 15-51
15.7.9 Piles and Piling 15-52
15.7.9.A Pile Types 15-52
15.7.9.B Pile Groups 15-53
15.7.9.C Battered Piles 15-53
15.7.9.D Structural Design and Detailing of CIP Concrete Piles 15-53
15.7.9.E Structural Steel Pipe Piles 15-53
15.7.9.F Pile Resistance 15-53
15.7.10 Concrete-Filled Steel Tubes 15-53
15.7.10.A Design Requirements 15-53
15.8 Walls and Buried Structures 15-54
15.8.1 Retaining Walls 15-54
15.8.1.A General 15-54
15.8.1.B Loads 15-54
15.8.1.C Design of Reinforced Concrete Retaining Walls 15-54
15.8.1.D Design of Cantilever Soldier Pile and Soldier Pile Tieback Walls 15-54
15.8.1.D.1 Ground Anchors (Tiebacks) 15-54
15.8.1.D.2 Design of Soldier Pile 15-54
15.8.1.D.3 Design of Lagging 15-54
15.8.1.D.4 Design of Fascia Panels 15-54

15.8.1.E Design of Structural Earth Walls . . . 15-54
15.8.1.E.1 Pre-approved Proprietary Structural Earth Walls . . . 15-54
15.8.1.F Design of Standard Plan Geosynthetic Walls . . . 15-54
15.8.1.G Design of Soil Nail Walls . . . 15-54
15.8.1.H Scour of Retaining Walls . . . 15-54
15.8.1.I Miscellaneous Items . . . 15-54
15.8.2 Noise Barrier Walls . . . 15-55
15.8.2.A General . . . 15-55
15.8.2.B Loads . . . 15-55
15.8.2.C Design . . . 15-55
15.8.2.C.1 Standard Plan Noise Barrier Walls . . . 15-55
15.8.2.C.2 Non-Standard Noise Barrier Walls . . . 15-55
15.8.3 Buried Structures . . . 15-55
15.8.3.A General Policy . . . 15-55
15.8.3.B General Design Requirements . . . 15-55
15.8.3.C Application of Loads . . . 15-55
15.8.3.D Scour . . . 15-56
15.8.3.E Corrosion . . . 15-56
15.8.3.F Worker, Pedestrian and Bicycle Fall Protection . . . 15-56
15.8.3.G W-Beam Guardrail on Buried Structures (TL-3) . . . 15-56
15.8.3.H Deflection . . . 15-56
15.8.3.I Control of Cracking . . . 15-56
15.8.3.J Joints . . . 15-56
15.8.3.K Deck Protection and Approach Slabs . . . 15-56
15.8.3.L Metal Structural Plate Structures . . . 15-57
15.8.3.M Design of Detention Vaults . . . 15-57
15.8.3.N Design of Tunnels . . . 15-57
15.9 Bearings and Expansion Joints . . . 15-58
15.9.1 Expansion Joints . . . 15-58
15.9.1.A General Considerations . . . 15-58
15.9.1.A.1 Concrete Bridges . . . 15-58
15.9.1.A.2 Steel Bridges . . . 15-58
15.9.1.B General Design Criteria . . . 15-58
15.9.1.B.1 Shrinkage Effects . . . 15-59
15.9.1.B.2 Thermal Effects . . . 15-59
15.9.1.C Small Movement Range Joints . . . 15-60
15.9.1.C.1 Compression Seals . . . 15-60
15.9.1.C.2 Rapid-Cure Silicone Sealants . . . 15-60
15.9.1.C.3 Asphaltic Plug Joints . . . 15-60
15.9.1.C.4 Headers . . . 15-60

15.9.1.D Medium Movement Range Joints . . . 15-61
15.9.1.D.1 Steel Sliding Plate Joints . . . 15-61
15.9.1.D.2 Strip Seal Joints . . . 15-61
15.9.1.D.3 Bolt-down Panel Joints . . . 15-61
15.9.1.E Large Movement Range Joints . . . 15-61
15.9.1.E.1 Steel Finger Joints . . . 15-61
15.9.1.E.2 Modular Expansion Joints . . . 15-62
15.9.2 Bearings . . . 15-63
15.9.2.A General Considerations . . . 15-63
15.9.2.B Force Considerations . . . 15-63
15.9.2.C Movement Considerations . . . 15-63
15.9.2.C.1 Elastomeric and Fabric Pad Bearings . . . 15-63
15.9.2.C.2 HLMR Bearings . . . 15-63
15.9.2.D Detailing Considerations . . . 15-64
15.9.2.E Bearing Types . . . 15-64
15.9.2.E.1 Elastomeric Bearings . . . 15-64
15.9.2.E.2 Fabric Pad Sliding Bearings . . . 15-65
15.9.2.E.3 Pin Bearings . . . 15-66
15.9.2.E.4 Rocker and Roller Type Bearings . . . 15-66
15.9.2.E.5 Spherical Bearings . . . 15-66
15.9.2.E.6 Disc Bearings . . . 15-66
15.9.2.E.7 Seismic Isolation Bearings . . . 15-66
15.9.2.F Miscellaneous Details . . . 15-66
15.9.2.F.1 Temporary Support before Grouting Masonry Plate . . . 15-66
15.9.2.F.2 Anchor Bolts . . . 15-67
15.9.2.G Contract Drawing Representation . . . 15-67
15.9.2.H Shop Drawing Review . . . 15-67
15.9.2.I Bearing Replacement Considerations . . . 15-67
15.10 Signs, Barriers, Bridge Approach Slabs, and Utilities . . . 15-68
15.10.1 Sign and Luminaire Supports . . . 15-68
15.10.2 Bridge Traffic Barriers . . . 15-68
15.10.2.A General Guidelines and Policy . . . 15-68
15.10.3 At Grade Concrete Barriers . . . 15-68
15.10.3.A Traffic Barrier Moment Slab Design Criteria . . . 15-68
15.10.3.A.1 Structural Capacity . . . 15-68
15.10.3.A.2 Global Stability . . . 15-68
15.10.3.A.3 Geometry . . . 15-68
15.10.3.A.4 Soil Reinforcement . . . 15-68
15.10.3.A.5 Wall Panel . . . 15-69
15.10.3.B Precast Concrete Barrier . . . 15-69

15.10.4 Bridge Traffic Barrier Rehabilitation 15-69
15.10.4.A General Guidelines and Policy 15-69
15.10.4.A.1 Design Criteria 15-69
15.10.5 Bridge Railing 15-70
15.10.5.A General Guidelines and Policy 15-70
15.10.6 Bridge Approach Slabs 15-70
15.10.6.A Bridge Approach Slab Design Criteria 15-70
15.10.6.B Bridge Approach Slab Detailing 15-71
15.10.6.C Skewed Bridge Approach Slabs 15-71
15.10.6.D Approach Anchors and Expansion Joints 15-71
15.10.6.E Bridge Approach Slab Addition or Retrofit to Existing Bridges 15-71
15.10.6.F Bridge Approach Slab Staging 15-72
15.10.7 Traffic Barrier on Bridge Approach Slabs 15-72
15.10.7.A Bridge Approach Slab over Wing Walls, Cantilever Walls or Geosynthetic Walls 15-72
15.10.7.B Bridge Approach Slab over SE Walls 15-72
15.10.8 Utilities Installation on New and Existing Structures 15-72
15.10.8.A General Concepts 15-72
15.10.8.A.1 Coating and Corrosion Protection 15-72
15.10.8.B Utility Design Criteria 15-73
15.10.8.B.1 Utility Location 15-73
15.10.8.B.2 Termination at the Bridge Ends 15-73
15.10.8.B.3 Utility Expansion 15-73
15.10.8.B.4 Utility Blockouts 15-73
15.10.8.B.5 Gas Lines or Volatile Fluids 15-73
15.10.8.B.6 Water Lines 15-73
15.10.8.B.7 Sewer Lines 15-74
15.10.8.B.8 Electrical (Power and Communications) 15-74
15.10.8.C Box/Tub Girder Bridges 15-74
15.10.8.D Traffic Barrier Conduit 15-74
15.10.8.E Conduit Types 15-75
15.10.8.F Utility Supports 15-75
15.10.8.F.1 Pipe Hangers 15-75
15.10.8.F.2 Surface Mounting 15-75
15.10.9 Review Procedure for Utility Installations on Existing Structures 15-75
15.10.10 Anchors for Permanent Attachments 15-76
15.10.11 Drainage Design 15-76
15.10.11.A Geometrics 15-76
15.10.11.B Hydrology 15-76
15.10.11.C On Bridge Systems 15-76

15.11 Detailing Practices 15-77
15.11.1 Standard Practices 15-77
15.11.1.A Drawing Orientation and Layout Control 15-77
15.11.1.B Lettering 15-77
15.11.1.B.1 General 15-77
15.11.1.B.2 Dimensioning 15-77
15.11.1.C Line Work 15-78
15.11.1.D Scale 15-78
15.11.1.E Graphic Symbols 15-78
15.11.1.F Structural Sections, Views and Details 15-78
15.11.1.G Miscellaneous 15-79
15.11.1.H RFC Revisions 15-79
15.11.1.I Title Block 15-79
15.11.1.J Reinforcement Detailing 15-80
15.11.2 Bridge Office Standard Drawings and Office Examples 15-81
15.11.2.A General 15-81
15.11.2.B Use of Standards 15-81
15.11.3 Plan Sheets 15-81
15.11.3.A Layout 15-81
15.11.3.B General Notes/Construction Sequence 15-82
15.11.3.C Footing Layout 15-82
15.11.3.D Piles/Shafts 15-82
15.11.3.E Abutment 15-82
15.11.3.F Intermediate Piers/Bents 15-83
15.11.3.G Bearing Details 15-83
15.11.3.H Framing Plan 15-83
15.11.3.I Typical Section 15-83
15.11.3.J Girders/Diaphragms 15-83
15.11.3.K Bridge Deck Reinforcement 15-83
15.11.3.L Expansion Joints 15-83
15.11.3.M Traffic Barrier 15-83
15.11.3.N Bridge Approach Slab 15-83
15.11.3.O Barlist 15-84
15.11.4 Structural Steel 15-84
15.11.4.A General 15-84
15.11.4.B Bars 15-84
15.11.4.C Plates 15-84
15.11.4.D Strips 15-84
15.11.4.E Labeling 15-84
15.11.5 Aluminum Section Designations 15-85
15.11.6 Abbreviations 15-85

15.12 Bridge Load Rating 15-86
15.12.1 General 15-86
15.12.2 Load Rating Software 15-86
15.13 Appendices 15-87
Appendix 15.2-A1 Conceptual Plan Checklist 15-88
15.99 References 15-89

Chapter 1 General Information Contents

1.1 Manual Description 1-1
1.1.1 Purpose 1-1
1.1.1.A Use of ***Bridge Design Manual*** on Design-Build and Progressive Design-Build Projects 1-1
1.1.2 Specifications 1-1
1.1.3 Format 1-2
1.1.3.A General 1-2
1.1.3.B Chapters 1-2
1.1.3.C Numbering System 1-3
1.1.3.C.1 Numbering of Sections 1-3
1.1.3.C.2 Numbering of Sheets 1-3
1.1.3.C.3 Appendices 1-3
1.1.3.C.4 Numbering of Tables and Figures 1-3
1.1.4 Revisions 1-4
1.1.5 Design Memorandums 1-4
1.2 Bridge and Structures Office Organization 1-5
1.2.1 General 1-5
1.2.2 Organizational Elements of the Bridge Office 1-5
1.2.2.A State Bridge and Structures Engineer 1-5
1.2.2.B State Bridge Design Engineer 1-5
1.2.2.B.1 Structural Design Units 1-5
1.2.2.B.2 Bridge Projects Unit 1-6
1.2.2.B.3 Mega Projects Bridge Unit Manager 1-7
1.2.2.B.4 Floating Bridge & Special Structures Design Unit Manager 1-7
1.2.2.B.5 Bridge Design Technology Unit Manager 1-8
1.2.2.C State Bridge Preservation Engineer 1-8
1.2.2.C.1 Bridge Preservation Office (BPO) 1-8
1.2.2.D Bridge Asset Management Engineer 1-8
1.2.2.E Staff Support 1-9
1.2.2.F Office Administrator 1-9
1.2.3 Unit Responsibilities and Expertise 1-9

1.3 Roles, Responsibilities and Procedures 1-10
1.3.1 General 1-10
1.3.1.A Requirements for Engineering. 1-10
1.3.2 General Design Procedures 1-10
1.3.2.A PS&E Prepared by WSDOT Bridge and Structures Office 1-10
1.3.2.A.1 Design Team 1-10
1.3.2.A.2 Designer Responsibility 1-10
1.3.2.A.3 Structural Detailer Responsibility. 1-12
1.3.2.A.4 Specialist Responsibility 1-12
1.3.2.A.5 Specification and Estimating Engineer Responsibilities 1-13
1.3.2.A.6 Design Unit Manager Responsibility 1-13
1.3.2.A.7 State Bridge Design Engineer's Responsibilities. 1-15
1.3.2.A.8 Bridge Scheduling Engineer Responsibilities 1-15
1.3.2.A.9 WSDOT Design Reviewer's or Coordinator's Responsibilities 1-16
1.3.2.B Consultant PS&E — Projects on WSDOT Right of Way 1-16
1.3.2.B.1 WSDOT Consultant Liaison Engineer Responsibility . 1-16
1.3.2.B.2 WSDOT Project Manager Responsibility. 1-16
1.3.2.C Consultant PS&E — Projects on County and City Right of Way. 1-16
1.3.2.D Structural Engineering and Significant Structures. 1-17
1.3.3 Design/Check Calculation File 1-17
1.3.3.A File Format and Naming 1-17
1.3.3.B File Inclusions 1-18
1.3.3.C File Exclusions 1-19
1.3.4 PS&E Review Period 1-19
1.3.5 Addenda 1-19
1.3.6 Construction Support 1-20
1.3.6.A Shop Plans and Permanent Structure Construction Procedures 1-20
1.3.6.A.1 Bridge Shop Plans and Procedures. 1-20
1.3.6.A.2 Sign Structure, Signal, and Illumination Shop Plans . . 1-22
1.3.6.A.3 Geotechnical Submittals 1-22
1.3.6.B Contract Changes (Change Orders and As-Builts) 1-23
1.3.6.B.1 Request for Changes. 1-23
1.3.6.B.2 Processing Contract Revisions 1-23
1.3.6.B.3 As-Built Plan Process 1-24
1.3.7 Vacant 1-24
1.3.8 Archiving Design Calculations, Job Files, and S&E Files 1-24
1.3.8.A Upon Award of the Project. 1-24
1.3.8.B Upon Physical Contract Completion 1-25
1.3.8.C Consultant Designs 1-26
1.3.8.D Design-Build and Progressive Design-Build Projects 1-27

1.3.9 Public Disclosure Policy Regarding Bridge Plans . . . 1-27
1.3.10 Use of Computer Software . . . 1-27
1.3.10.A Policy on Open Source Software . . . 1-27
1.3.10.B Approved Software Tools . . . 1-27
1.4 Quality Control/Quality Assurance/Quality Verification (QC/QA/QV) Procedures . . . 1-28
1.4.1 General . . . 1-28
1.4.2 WSDOT Prepared Bridge (or Structure) Preliminary Plans . . . 1-29
1.4.2.A Description of Terms . . . 1-29
1.4.3 WSDOT Prepared PS&E . . . 1-30
1.4.3.A Plans, Calculations and Quantities Prepared by WSDOT Bridge and Structures Office . . . 1-30
1.4.3.A.1 Description of Terms . . . 1-30
1.4.3.A.2 Designer Responsibility . . . 1-30
1.4.3.A.3 Checker Responsibility . . . 1-31
1.4.3.A.4 Specialist/Bridge and Structures Architect Responsibility . . . 1-32
1.4.3.A.5 Design Unit Manager Responsibility . . . 1-32
1.4.3.A.6 State Bridge Design Engineer's Responsibilities . . . 1-33
1.4.3.A.7 General Bridge Plan Stamping and Signature Policy . 1-33
1.4.3.B Specifications and Estimates (S&E) Prepared by WSDOT Bridge and Structures Office . . . 1-34
1.4.3.B.1 Description of Terms . . . 1-34
1.4.3.B.2 General Specification and Estimate Stamping and Signature Policy . . . 1-35
1.4.4 Consultant Prepared PS&E/Preliminary Plans on WSDOT Right of Way . . . 1-35
1.4.5 Structural Design Work Prepared Under Design-Build Method of Project Delivery 1-36
1.4.6 Structural Design Work Prepared Under Contractor Supplied Design Method of Project Delivery . . . 1-36
1.5 Bridge Design Scheduling . . . 1-37
1.5.1 General . . . 1-37
1.5.2 Preliminary Design Schedule . . . 1-37
1.5.3 Final Design Schedule . . . 1-37
1.5.3.A Breakdown of Project Staff-Hours Required . . . 1-37
1.5.3.B Estimate Design Time Required . . . 1-38
1.5.3.C Monthly Project Progress Report . . . 1-39
1.6 Guidelines for Bridge Site Visits . . . 1-40
1.6.1 Existing Structure Modifications . . . 1-40
1.6.2 New Structures . . . 1-41
1.6.3 Structure Demolition . . . 1-41

1.7 Appendices 1-42
Appendix 1.1-A1 Bridge Design Manual Revision QC/QA Worksheet 1-43
Appendix 1.2-A1 Bridge & Structures Design Office Workflow 1-44
Appendix 1.3-A1 Bridge & Structures Design Calculations 1-45
Appendix 1.4-A1 QC/QA Signature Sheet 1-46
Appendix 1.4-A2 Min. Requirements for Check of Contractor-Design Buried Structure . 1-47
1.99 References 1-48

Chapter 1 General Information

1.1 Manual Description

1.1.1 Purpose

The *Bridge Design Manual* (BDM) M 23-50 sets the standard for bridge and structure designs within the Washington State Department of Transportation's (WSDOT) right of way. This manual outlines WSDOT design details and methods, incorporating standard practices that are based on years of experience. The BDM also identifies where WSDOT standard of practices differ from the AASHTO specifications.

The design details and design methods of the BDM shall be used in the development of any bridge or structure project within the WSDOT right of way. Adherence to the BDM is expected for all bridge or structural projects that are located within the WSDOT right of way.

The *Bridge Design Manual* is a dynamic document, which constantly changes because of the creativity and innovative skills of our bridge designers and structural detailers. It is not intended as the sole reference for the design of unusual structures or to inhibit the designer in the exercise of engineering judgment. The information, guidance, and references contained herein are not intended as a substitute for experience, sound engineering judgment, and common sense.

1.1.1.A Use of *Bridge Design Manual* on Design-Build and Progressive Design-Build Projects

When a reference is made to "*Bridge Design Manual*" or "BDM" in the Design-Build Contract or Mandatory Standards, the Design-Builder shall proceed as follows:

- Refer first to *Bridge Design Manual* Chapter 15 "Structural Design Requirements for Design-Build Contracts". All requirements in *Bridge Design Manual* Chapter 15 are Contract requirements.
- If the Design-Build Contract or a Mandatory Standard references a specific section of the *Bridge Design Manual*, the Design-Builder shall review the applicable portions of *Bridge Design Manual* Chapter 15. If there are discrepancies between *Bridge Design Manual* Chapter 15 and the specific section reference, Chapter 15 shall have contractual precedence.
- All other portions of Chapters 1-14 of the *Bridge Design Manual* shall be considered a Reference Document.

1.1.2 Specifications

This manual and the current editions of the following AASHTO Specifications are the basic documents used to design highway bridges and structures in Washington State:

- AASHTO *LRFD Bridge Design Specifications* (LRFD-BDS)
- AASHTO *Guide Specifications for LRFD Seismic Bridge Design* (LRFD-SGS)

The *Bridge Design Manual* is not intended to duplicate the AASHTO Specifications. This manual supplements the AASHTO Specifications by providing additional direction, design aides, examples, and information on office practice. The *Bridge Design Manual* takes precedence where conflict exists with the AASHTO Specifications. The WSDOT Bridge Design Engineer will provide guidance as necessary.

The prescriptive terms used in the BDM are defined as follows:

- The term “shall” indicates that a provision in the BDM is mandatory.
- The term “should” indicates a strong preference for a given criteria.
- The term “may” indicates a criterion that is usable, but other local and suitable documented, verified, and approved criterion may also be used in a manner consistent with the LRFD approach to bridge design.
- The term “recommended” is used to give guidance based on past experience.

References are listed at the end of each chapter.

1.1.3 Format

1.1.3.A General

The *Bridge Design Manual* consists of one volume with each chapter organized as follows:

Criteria or other information (white paper when printed)

Appendix A (yellow paper when printed) Design Aids

Appendix B (salmon paper when printed) Design Examples

1.1.3.B Chapters

1. General Information
2. Preliminary Design
3. Loads
4. Seismic Design and Retrofit
5. Concrete Structures
6. Structural Steel
7. Substructure Design
8. Walls and Buried Structures
9. Bearings and Expansion Joints
10. Signs, Barriers, Approach Slabs, Utilities
11. Detailing Practice
12. Quantities, Construction Costs, and Specifications
13. Bridge Load Rating
14. Accelerated and Innovative Bridge Construction
15. Structural Design Requirements For Design-Build Contracts

1.1.3.C Numbering System

1.1.3.C.1 *Numbering of Sections*

The numbering system for the criteria consists of a set of numbers followed by letters as required to designate individual subjects by chapter, section, and subsection.

Example:

Chapter 5 Concrete Structures (Chapter)

5.3 Reinforced Concrete Box Girder Bridges (Section)

5.3.2 Reinforcement (Subsection)

5.3.2.A Top Slab Reinforcement

1. Near Center of Span

A. Transverse Reinforcement

1.1.3.C.2 *Numbering of Sheets*

Each chapter starts a new page numbering sequence. The page numbers are located in the lower outside corners and begin with the chapter number, followed by the sequential page number.

Example: 5-1, 5-2, etc.

1.1.3.C.3 *Appendices*

Appendices are included to provide the designer with design aids (Appendix A) and examples (Appendix B). Design aids are generally standard in nature, whereas examples are modified to meet specific job requirements.

An appendix is numbered using the chapter followed by section number and then a hyphen and the letter of the appendix followed by consecutive numbers.

Example: 5.3-A1 (Box Girder Bridges) designates a design aid required or useful to accomplish the work described in Chapter 5, Section 3.

1.1.3.C.4 *Numbering of Tables and Figures*

Tables and figures shall be numbered using the chapter, section, subsection in which they are located, and then a hyphen followed by consecutive numbers.

Example: Figure 5.3.2-1 is the first figure found in Chapter 5, section 3, subsection 2.

1.1.4 Revisions

Revisions to this manual are related to emerging concepts, new state or federal legislation, and comments forwarded to the Bridge Design Office. Some revisions are simple spot changes, while others are major chapter rewrites. The current version of the manual is available online at: https://wsdot.wa.gov/engineering-standards/all-manuals-and-standards/manuals/bridge-design-manual-lrfd.

All pages include a revision number and publication date. When a page is revised, the revision number and publication date are revised. Revisions shall be clearly indicated in the text.

The process outlined below is followed for *Bridge Design Manual* revisions:

1. Revisions are prepared, checked and coordinated with chapter authors.
2. Revisions are submitted to the Bridge Design Engineer and the FHWA WA Division Bridge Engineer for approval. However, comments related to grammar and clarity can be sent directly to the BDM Coordinator without Bridge Design Engineer or the FHWA approval.
3. After approval from the Bridge Design Engineer and FHWA, the BDM Coordinator works with WSDOT Engineering Publications to revise the manual.
4. Revised pages from Engineering Publications are checked for accuracy and corrected if necessary.
5. A Publication Transmittal is prepared by Engineering Publications. Publication Transmittals include remarks and instructions for updating the manual. Engineering Publications will post the complete manual and revision at: https://wsdot.wa.gov/engineering-standards/all-manuals-and-standards/manuals/bridge-design-manual-lrfd/active-bridge-design-manual-memorandums.
6. Engineering Publications will coordinate electronic and hard copy distributions.

A Revision QA/QC Worksheet (see Appendix 1.1-A1) shall be prepared to document and track the revision process.

1.1.5 Design Memorandums

The WSDOT Bridge Design Engineer may issue Design Memorandums as interim updates to this manual. Active Design Memorandums supersede the *Bridge Design Manual*. Active Design Memorandums are available at: https://wsdot.wa.gov/engineering-standards/all-manuals-and-standards/manuals/bridge-design-manual-lrfd/active-bridge-design-manual-memorandums.

Check for active Design Memorandums on a regular basis.

1.2 Bridge and Structures Office Organization

1.2.1 General

The primary responsibilities of the Bridge and Structures Office are to:

- Provides structural engineering services for WSDOT.
- Provides technical advice and assistance to other governmental agencies and consultants on such matters.

The *Design Manual* M 22-01 states the following:

> Bridge design is the responsibility of the Bridge and Structures Office in WSDOT Headquarters. Any design authorized at the Region level is subject to review and approval by the Bridge and Structures Office.

1.2.2 Organizational Elements of the Bridge Office

1.2.2.A State Bridge and Structures Engineer

The State Bridge and Structures Engineer is responsible for structural engineering services for the department and manages staff and programs for structural design, contract plan preparation, inspections and assessments of existing bridges.

1.2.2.B State Bridge Design Engineer

The State Bridge Design Engineer is directly responsible to the Bridge and Structures Engineer for structural design and review, and advises other divisions and agencies on such matters.

1.2.2.B.1 *Structural Design Units*

The Structural Design Units are responsible for the design of bridges and other structures. Design includes preparation of contract plans. The units provide special design studies, develop design criteria, check shop plans, and review designs submitted by consultants. Frequently, the State Bridge Design Engineer assigns the units the responsibility for preparing preliminary bridge plans and other unscheduled work through the oversight of the Design Unit Manager.

The Design Unit Manager provides day-to-day leadership, project workforce planning, mentoring, and supervision for the design unit. The Design Unit Manager is assisted by one or more Assistant Supervisors who directly supervise a portion of the group and performs other tasks as delegated by the Design Unit Manager. Organization and job assignments within the unit are flexible and depend on projects underway at any particular time as well as the qualifications and experience level of individuals. The primary objective of the design units is to produce contract documents for bridges and structures within scope, schedule and budget. This involves designing, checking, reviewing, and detailing in an efficient and timely manner.

Structural Design Units include Specialists with particular areas of expertise including concrete, steel, seismic/foundation, and expansion joints/bearings. The Specialists act as a resource for the Bridge Office in their specialty and are responsible for keeping up-to-date on current AASHTO criteria, new design concepts and products, technical publications, construction and maintenance issues, and are the primary points of contact for industry representatives.

The Structural Design units are also responsible for the design and preparation of contract plans for modifications to bridges in service. These include bridge rail replacement, deck repair, seismic retrofits, emergency repairs when bridges are damaged by vehicle or ship collision or natural phenomenon, and expansion joint and drainage retrofits. They review proposed plans of utility attachments to existing bridges.

1.2.2.B.2 *Bridge Projects Unit*

The Bridge Projects Unit is responsible for project scoping, scoping-level cost estimates, bridge preliminary plans, bridge specifications and estimates, bridge design scheduling, consultant liaison activities, construction support, bridge architecture practices, and Bridge Office design-build practices. The Bridge Projects Unit Manager provides leadership, mentoring and supervision for staff efforts as described below:

The Bridge Projects Unit Manager is responsible for assigning support of Cost Risk Assessment's, Cost Estimate Validation Process, and workshop support.

The Bridge Projects Support Engineer directs preliminary design work, specification, cost estimates preparation, and project scoping.

The Preliminary Plan Engineers are responsible for bridge project planning from initial scoping to design type, size, and location (TSL) studies and reports. They are responsible for preliminary plan preparation of bridge and walls including assembly and analysis of site data, preliminary structural analysis, cost analysis, determination of structure type, and drawing preparation. They also check preliminary plans prepared by others, review highway project environmental documents and design reports, and prepare U. S. Coast Guard Permits.

The Specifications and Estimate (S&E) Engineers develop and maintain construction specifications and cost estimates for bridge projects. They also develop specifications and cost estimates for bridge contracts prepared by consultants and other government agencies, which are administered by WSDOT. They assemble and review the completed bridge PS&E before submittal to the Regions. They also coordinate the PS&E preparation with the Regions and maintain bridge construction cost records.

The Consultant Liaison Engineer prepares bridge consultant agreements and coordinates consultant PS&E development activities with those of the Bridge Office. The Consultant Liaison Engineer negotiates bridge design contracts with consultants.

The Construction Support Unit Engineers are responsible for checking the contractor's falsework, shoring, and forming plans. Shop plan review and approval are coordinated with the design units. Actual check of the shop plans is done in the design unit. Field requests for plan changes come through this office for a recommendation as to approval.

The State Bridge and Structures Architect is responsible for reviewing and approving bridge preliminary plans, retaining walls, preparing renderings, coordinating aesthetic activities with Regions (i.e. suggesting corridor themes and approving public art), and other duties to improve the aesthetics of our bridges and structures. The State Bridge and Structures Architect works closely with bridge office and region staff. During the design phase, designers should get the Architect's approval for any changes to architectural details shown on the approved preliminary plan.

The Scheduling Engineer monitors the design work schedule for the Bridge and Structures Office, updates the Bridge Design Schedule (BDS) and maintains records of bridge contract costs. Other duties include coordinating progress reports to Regions by the Unit Supervisors and S&E Engineers through the Project Delivery Information System (PDIS).

The Bridge Projects Unit is responsible for developing Design-Build policy within the Bridge Office, including updates for the RFP Template (owned by HQ Construction).

In addition, the Bridge Projects Unit is responsible for updating the *Bridge Design Manual* M 23-50. The unit coordinates changes to the *Standard Specifications* and facilitates updates or revisions to WSDOT Bridge Office design standards.

1.2.2.B.3 *Mega Projects Bridge Unit Manager*

The Mega Project Bridge Manager provides leadership, guidance and project management responsibilities for various complex, unique and monumental bridge design and construction projects. Mega Bridge Projects are defined as suspension, cable-stayed, movable, segmental or a complex group of interchange/corridor bridges and include conventional and design-build project delivery methods. The Mega Project Bridge Manager represents the Bridge and Structures Office in Cost Estimate Validation Process activities, Value Engineering Studies and Research Projects regarding major bridge projects.

1.2.2.B.4 *Floating Bridge & Special Structures Design Unit Manager*

This position serves two main roles in the Bridge Office:

1. Serves as a statewide technical expert on floating bridges
   - Determines and manages statewide design policy for floating bridges, movable bridges and special structures.
   - Maintains close ties and communication with Region operations staff and Bridge Preservation staff to continuously evaluate the condition of the WSDOT floating bridges, movable bridges and special structures and their operational needs.
2. Serves as the Design Unit Manager of the Floating Bridge & Special Structures design unit
   - Manages floating bridges, movable bridges and special structures design activities performed by the Bridge & Structures Office design staff and consultants.
   - Submits final design documents and budget proposals for floating bridges, movable bridges and special structures to the State Bridge Design Engineer for approval.
   - Once construction of floating bridges, movable bridges and special structures commence, the Floating Bridge & Special Structures unit provides technical support, reviews and approves construction submittals required by the contract.

1.2.2.B.5 *Bridge Design Technology Unit Manager*

The Bridge Design Technology Unit Manager is the statewide technical expert for structural engineering computing technology and manages the Bridge Design Technology Unit. This unit is responsible for Bridge Design Office IT matters, computer resource planning and implementation, support of computer aided design applications, liaison with Information Technology Division (ITD) and the statewide Computer Automated Engineering (CAE) group, liaison with WSDOT Communications office for matters related to the Bridges and Structures content on the agency web site, operation support of structural analysis, design, load rating, and contract plan preparation, and structural engineering software development activities.

1.2.2.C State Bridge Preservation Engineer

The State Bridge Preservation Engineer is the Statewide Program Manager of the bridge and tunnel inspection programs. The position ensures that WSDOT fulfills its federal responsibilities for inspection and load rating. It directs activities and develops programs to assure the structural and functional integrity of all state bridges in service. The Bridge Preservation Engineer directs emergency response activities when bridges are damaged.

1.2.2.C.1 *Bridge Preservation Office (BPO)*

The Bridge Preservation Office is responsible for planning and implementing an inspection program for the more than 3,200 fixed and movable state highway bridges, sign bridges and cantilever sign structures. In addition, BPO provides inspection services on some local agency bridges and on the state's ferry terminals. All inspections are conducted in accordance with the National Bridge Inspection Standards (NBIS).

BPO maintains the computerized Washington State Bridge Inventory System (WSBIS) of current information on more than 7,300 state, county, and city bridges in accordance with the NBIS. This includes load ratings for all bridges. BPO prepares a *Bridge List* of the state's bridges, which is published every two years, maintains the intranet-based Bridge Engineering Information System (BEIST), and prepares the annual Recommended Bridge Repair List (RBRL) based on the latest inspection reports for state owned structures.

BPO is responsible for the bridge load rating and scour programs. It provides damage assessments and emergency response services when bridges are damaged because of vehicle or ship collision or natural phenomenon such as: floods, wind, or earthquakes.

1.2.2.D Bridge Asset Management Engineer

The Bridge Asset Management Engineer is responsible for the program development, planning and monitoring of all statewide bridge program activities. These include Structures Preservation - P2 program funded bridge replacements and rehabilitation, bridge deck protection, major bridge repair, and bridge painting.

The Bridge Asset Management Engineer supervises the Bridge Deck Management Engineer, and also helps to program Seismic and Scour Remediation projects for WSDOT.

In addition, the Bridge Asset Management Engineer manages the bridge deck protection, deck testing and the bridge research programs. The Bridge Asset Management Engineer is responsible for the planning, development, coordination, and implementation of new programs (e.g., Seismic Retrofit and Preventative Maintenance), experimental feature projects, new product evaluation, and technology transfer.

1.2.2.E Staff Support

Staff Support is responsible for many support functions, such as: scanning, timekeeping, payroll, receptionist, vehicle management, mail, inventory management, and other duties requested by the Bridge and Structures Engineer. This unit also maintains office supplies and provides other services.

1.2.2.F Office Administrator

The Office Administrator is responsible for coordinating personnel actions, updating the organizational chart, out-of-state travel requests, and other duties requested by the Bridge and Structures Engineer. The Office Administrator also handles logistical support, office and building maintenance issues.

1.2.3 Unit Responsibilities and Expertise

The following is an updated summary of the structural design, review and plan preparation responsibilities/expertise within the Bridge Design Section. Contact the Unit Manager for the name of the appropriate staff expert for the needed specialty. The Bridge Design Office workflow is shown in Appendix 1.2-A1.

Unit Supervisor	Responsibility/Expertise
Brian Aldrich **Design Unit Manager**	Concrete Design Technical Support Bridge Paving Design Bridge Traffic Barriers and Rail Retrofits Bridge and Structures Design
Richard Zeldenrust **Design Unit Manager**	Overhead and Bridge-Mounted Sign Structures Light Standard & Traffic Signal Supports Repairs to Damaged Bridges Structural Steel Technical Support Seismic/Foundation Design Technical Support Emergency Slide Repairs Retaining Walls (including Structural Earth, Soldier Pile and Tie-Back, Geosynthetic, and Soil Nail) Pre-Approval of Retaining Wall Systems Noise Barrier Walls Bearing and Expansion Joint Technical Support Bridge and Structures Design
Michael Rosa **Bridge Projects Unit Manager**	Special Provisions, Bridge Preliminary Plans, Cost Estimates, *Bridge Design Manual*, Coast Guard Permits Bridge Scheduling Construction Support Consultant Liaison Architectural Guidance/Oversight for WSDOT Bridges Renderings/Graphics for Architectural Features Public Outreach Through Context- Sensitive Solutions framework
Richard Brice	Bridge Engineering Software, Bridge Design Office IT matters, and CAD
Tim Moore **Mega Projects Unit Manager**	Scoping Research and Support Design-Build and Mega-Project Support Sound Transit Projects Liaison
Nick Rodda **Floating Bridge and Special Structures Unit Manager**	Floating Bridge Design and Retrofit Anchor Cable Replacements Structural Rehab of Movable Bridges

1.3 Roles, Responsibilities and Procedures

1.3.1 General

1.3.1.A Requirements for Engineering

A registered professional engineer licensed in the state of Washington or a registered structural engineer licensed in the state of Washington shall have responsible charge over all engineering. Section 1.3.2D of this manual stipulates when a structural engineer is required as well as when a registered professional engineer can suffice.

1.3.2 General Design Procedures

1.3.2.A PS&E Prepared by WSDOT Bridge and Structures Office

1.3.2.A.1 *Design Team*

The design team usually consists of the Designer(s), Checker(s), Structural Detailer(s), Bridge & Structures Architect, and a Specification and Estimate Engineer, who are responsible for preparing a set of contract documents on or before the scheduled due date(s) and within the budget allocated for the project. On large projects, the Design Unit Manager may designate a designer to be a Project Coordinator with additional duties, such as: assisting the Design Unit Manager in communicating with the Region, coordinating and communicating with the State Geotechnical Office, and monitoring the activities of the design team.

In general, it is a good practice to have some experienced designers on every design team. All design team members should have the opportunity to provide input to maximize the quality of the design plans.

1.3.2.A.2 *Designer Responsibility*

The designer is responsible for the content of the contract plan sheets, including structural analysis, completeness and correctness. A good set of example plans, which is representative of the bridge type, is indispensable as an aid to less experienced designers and detailers.

During the design phase of a project, the designer will need to communicate frequently with the Design Unit Manager and other stakeholders. This includes acquiring, finalizing or revising roadway geometrics, soil reports, hydraulics recommendations, and utility requirements. Constructability issues may also require that the designer communicate with the Region or Construction Office. The designer may have to organize face-to-face meetings to resolve constructability issues early in the design phase. The bridge plans must be coordinated with the PS&E packages produced concurrently by the Region.

The designer shall advise the Design Unit Manager as soon as possible of any scope and project cost increases and the reasons for the increases. The Design Unit Manager will then notify the Region project office if the delivery schedule will have to be changed. If Region concurs with a change in the delivery date, the Design Unit Manager shall notify the Bridge Scheduling Engineer of the revised delivery dates.

The designer or Project Coordinator is responsible for project planning and development which involves the following:

1. Determines scope of work, identifies tasks and plans order of work.
2. Prepare design criteria that are included in the front of the design calculations. Compares tasks with BDM office practice and AASHTO *Bridge Design Specifications*.
   - A. Insures that design guidelines are sufficient.
     - i. Provides justification for any deviation from LRFD-BDS, LRFD-SGS, or the BDM.
     - ii. Provides justification for design approach.
     - iii. Provides justification for any deviation from office practices regarding design and details.
     - iv. Other differences.
   - B. Meet with the Region design staff and other project stakeholders early in the design process to resolve as many issues as possible before proceeding with final design and detailing.
   - C. Identify coordination needs with other designers, units, and offices.
   - D. Early in the project, the bridge sheet numbering system should be coordinated with the Region design staff. For projects with multiple bridges, each set of bridge sheets should have a unique set of bridge sheet numbers.
   - E. At least monthly or as directed by the Design Unit Manager:
     - i. Update Project Schedule and List of Sheets.
     - ii. Estimate percent complete.
     - iii. Estimate time to complete.
     - iv. Work with Design Unit Manager to adjust resources, if necessary.
   - F. Develop preliminary quantities for all cost estimates after the Preliminary Plan stage.
   - G. Near end of project:
     - i. Develop quantities, *Not Included in Bridge Quantity List, and Special Provisions Checklist* that are to be turned in with the plans. (See Section 12.4.4).
     - ii. Prepare the Bar List.
     - iii. Coordinate all final changes, including review comments received from the Bridge Specifications and Estimates Engineer.
     - iv. Meet with Region design staff and other project stakeholders at the constructability review/round table review meetings to address final project coordination issues.

The designer should inform the Design Unit Manager of any areas of the design, which should receive special attention during checking and review.

The design and check calculations are prepared by the designer and checker in accordance with Section 1.3.3 and become a very important record document. Design calculations will be a reference document during the construction of the structure and throughout the life of the structure. It is critical that the design calculations be user friendly. The design calculations shall be well organized, clear, properly referenced, and

include numbered pages along with a table of contents. The design and check calculation shall be assembled and archived in accordance with Section 1.3.3 and Section 1.3.8. The PDF calculations files shall be stamped, signed, and dated by a registered professional Engineer in the State of Washington. Computer data files shall be saved for use during construction, in the event that changed conditions arise.

The designer is also responsible for providing construction support and may be assigned to serve as a Bridge Technical Advisor. See BDM Section 1.3.6.

The designer and Bridge Technical Advisor (BTA) shall review as-builts for accuracy prior to the Project Engineer submitting them to HQ Engineering Records in accordance with BDM Section 1.3.6.B.3.

1.3.2.A.3 *Structural Detailer Responsibility*

The structural detailer is responsible for the quality and consistency of the contract plan sheets. The structural detailer shall ensure that the Bridge Office drafting standards as explained in Chapter 11 are upheld.

1. Refer to Chapter 11, for detailing practices.
2. Provide necessary and adequate information to ensure the contract plans are accurate, complete, and readable.
3. Detail plan sheets in a consistent manner and follow accepted detailing practices.
4. Check plans for geometry, reinforcing steel congestion, consistency, and verify control dimensions.
5. Check for proper grammar and spelling.
6. On multiple bridge contracts, work with the Designer/Project Coordinator to ensure that the structural detailing of all bridges within the contract shall be coordinated to maximize consistency of detailing from bridge to bridge. Extra effort will be required to ensure uniformity of details, particularly if multiple design units and/or consultants are involved in preparing bridge plans.
7. Maintain an ongoing understanding of bridge construction techniques and practices.

1.3.2.A.4 *Specialist Responsibility*

The primary responsibility of the specialist is to act as a knowledge resource for the Bridge and Structures Office, WSDOT, other governmental agencies and consultants. Designers are encouraged to consult specialists for complex projects early in the design process. Design Unit Managers overseeing a design project should actively identify any complex or unusual features, early in the design process, and encourage the designers involved to seek input from the suitable Specialist. The Specialists maintain an active knowledge of their specialty area, along with a current file of products and design procedures. The Specialists maintain industry contacts. Specialists provide training in their area of expertise.

Specialists are expected to remain engaged with the design efforts being carried out in the office related to their specialty. At the discretion of the Design Unit Manager, the Specialists may be requested to review, comment on and initial plans in their area of expertise prepared by other designers. Specialists are expected to review selected design work for consistency with other WSDOT projects, and for adherence to current office practice and current industry practice.

Specialists assist the Bridge and Structures Engineer in reviewing and voting on amendments to AASHTO specifications.

Specialists are responsible for keeping their respective chapters of the *Bridge Design Manual* M 23-50 up to date.

The Specialists act as Assistant Design Unit Managers within their unit. They are responsible for day-to-day supervision, including timesheet and evaluation responsibilities. The Specialists are also relied upon to assist the Design Unit Manager in allocating staff, and completing engineering and detailing staffing projections.

A secondary responsibility of the Bearings and Joints, Seismic/Substructure, Concrete and Steel Specialist is to serve as Design Unit Manager when the Design Unit Manager is absent.

Sign Structure design, Wall design, and Traffic Barrier & Rail design are three specialty areas where design and review work has traditionally been directed to dedicated staff in each of the two main design groups within the Bridge Design Office. Design guidance or review requests for unusual or unique projects involving these three specialty areas should be directed to the applicable Design Unit Manager for design or review.

1.3.2.A.5 *Specification and Estimating Engineer Responsibilities*

The S&E Engineer is responsible for compiling the PS&E package for bridge and/or related highway structural components. This PS&E package includes Special Provisions (Bridge Special Provisions or BSPs and General Special Provisions or GSPs as appropriate), construction cost estimate, construction working day schedule, test hole boring logs and other appendices as appropriate, and the design plan package.

The S&E Engineer is also responsible for soliciting, receiving, compiling and turning over to the designer all review comments received after the Bridge Plans turn-in. It is imperative that all review comments are channeled through the S&E Engineer to ensure consistency between the final bridge plans, specifications and estimate.

For a detailed description of the S&E Engineer's responsibilities, see Section 12.4.

1.3.2.A.6 *Design Unit Manager Responsibility*

1. The Design Unit Manager is responsible to the Bridge Design Engineer for the timely completion and quality of the bridge plans.
2. The Design Unit Manager works closely with the Project Coordinator and the design team (designer, checker, and structural detailer) during the design and plan preparation phases to help avoid major changes late in the design process. Activities during the course of design include:
    A. Evaluate the complexity of the project and the designer's skill and classification level to deliver the project in a timely manner. Determine both the degree of supervision necessary for the designer and the amount of checking required by the checker.
    B. Assist the design team in defining the scope of work, identifying the tasks to be accomplished and developing a project work plan.
    C. Make suitable staffing assignments and develop a design team time estimate to ensure that the project can be completed on time and within budget.

D. Review and approve design criteria before start of design.

E. Help lead designer conduct face-to-face project meetings, such as: project "kick-off" and "wrap-up" meetings with Region, geotechnical staff, bridge construction, and consultants to resolve outstanding issues.

F. Participate in coordinating, scheduling, and communicating with stakeholders, customers, and outside agencies relating to major structural design issues.

G. Facilitate resolution of major project design issues.

H. Assist the design team with planning, anticipating possible problems, collectively identifying solutions, and facilitating timely delivery of needed information, such as geometrics, hydraulics, foundation information, etc.

I. Interact with design team regularly to discuss progress, problems, schedule and budget, analysis techniques, constructability and design issues. Always encourage forward thinking, innovative ideas and suggestions for quality improvement.

J. Arrange for and provide the necessary resources, time and tools for the design team to do the job right the first time. Offer assistance to help resolve questions or problems.

K. Help document and disseminate information on special features and lessons learned for the benefit of others and future projects.

L. Mentor and train designers and detailers through the assignment of a variety of structure types.

3. The Design Unit Manager works closely with the design team during the plan review phase. Review efforts should concentrate on reviewing the completed plan details and design calculations for completeness and for agreement with office criteria and office practices. Review the following periodically and at the end of the project:

   A. Design Criteria

      - Seismic design methodology, acceleration coefficient ("A" value), and any seismic analysis assumptions.
      - Foundation report recommendations, selection of alternates.
      - Deviations from AASHTO, this manual and proper consideration of any applicable Design Memorandums.

   B. Design Time and Budget

   C. Facilitates resolution of issues beyond the authority of WSDOT Reviewer or Coordinator.

   D. Estimate time to complete the project. Plan resource allocation for completing the project to meet the scheduled Ad Date and budget. Monitor monthly time spent on the project.

      Plan and assign workforce to ensure a timely delivery of the project within the estimated time and budget. At monthly Design Unit Managers' scheduling meetings, notify the Bridge Project Support Engineer if a project is behind schedule.

E. Advise the Region of any project scope creep and construction cost increases. As a minimum, use quarterly status reports to update Region on project progress.

F. Use appropriate computer scheduling software or other means to monitor time usage, to allocate resources, and to plan projects.

G. Review constructability issues. Are there any problems unique to the project?

H. When submitting advertisement ready contract documents for distribution, identify a primary and secondary Bridge Technical Advisor (BTA) who will support the project in accordance with the WSDOT *Construction Manual* Section GEN 1-00.11 "Bridge and Structures Office Support on Design- Bid-Build Projects During Construction" to the Bridge Construction Support Engineer.

1.3.2.A.7 *State Bridge Design Engineer's Responsibilities*

The Bridge Design Engineer is the coach, mentor, and facilitator for the WSDOT Bridge Design Procedure. The leadership and support provided by this position is a major influence in assuring quality for structural designs performed by both WSDOT and consultants. The following summarizes the key responsibilities of the Bridge Design Engineer:

1. Prior to the Bridge Design Engineer stamping and signing any plans, he/ she shall perform a structural/constructability review of the plans. This action is consistent with the "responsible charge" requirements of state laws relating to Professional Engineers.
2. Review and approve the Preliminary Bridge Plans. The primary focus for this responsibility is to assure that the most cost-effective and appropriate structure type is selected for a particular bridge site.
3. Review unique project special provisions and *Standard Specifications* M 41-10 modifications relating to structures.
4. Facilitate partnerships between WSDOT, consultants, Local agencies, and the construction industry stakeholders.
5. Encourage designer creativity and innovation through forward thinking.
6. Exercise leadership and direction for maintaining a progressive and up to date *Bridge Design Manual* M 23-50.
7. Create an open and supportive office environment in which Design Section staff are empowered to do high quality structural design work.
8. Create professional growth opportunities through an office culture where learning is emphasized.
9. Encourage continuing professional development through training opportunities, attendance at seminars and conferences, formal education opportunities, and technical writing.

1.3.2.A.8 *Bridge Scheduling Engineer Responsibilities*

1. Update/maintain the bridge design schedule.
2. Assign non-WSDOT structural design work to a Design Unit for review.

1.3.2.A.9 *WSDOT Design Reviewer's or Coordinator's Responsibilities*

1. Early in the project, review consultant's design criteria, and standard details for consistency with WSDOT practices and other bridge designs in project.
2. Review the Job File as prepared by the Preliminary Plan Engineer.
3. Identify resources needed to complete work.
4. Initiate a project start-up meeting with the Consultant to discuss design criteria, submittal schedule and expectations, and also to familiarize himself/herself with the Consultant's designers.
5. Reach agreement early in the design process regarding structural concepts and design methods to be used.
6. Identify who is responsible for what and when all intermediate constructability, Bridge Plans, and Bridge PS&E review submittals are to be made.
7. Monitor progress.
8. Facilitate communication, including face-to-face meetings.
9. Resolve differences.

1.3.2.B Consultant PS&E — Projects on WSDOT Right of Way

1.3.2.B.1 *WSDOT Consultant Liaison Engineer Responsibility*

The Consultant Liaison's responsibilities are described using the term Area Consultant Liaison (ACL) in the current version of the WSDOT *Consultant Services Manual* M 27.50. The Consultant Liaison facilitates agreement management and provides contract support to Project Managers.

1.3.2.B.2 *WSDOT Project Manager Responsibility*

The Project Manager's responsibilities are described in the current version of the WSDOT *Consultant Services Manual* M 27.50. The Project Manager monitors and controls the consultant's scope, schedule, and budget and provides structural review of the consultant's deliverables.

1.3.2.C Consultant PS&E — Projects on County and City Right of Way

Counties and cities frequently hire Consultants to design bridges. WSDOT Local Programs Office determines which projects are to be reviewed by the Bridge and Structures Office.

WSDOT Local Programs Office sends the PS&E to the Bridge Project Support unit for assignment when a review is required. The Bridge and Structures Office's Consultant Liaison Engineer is not involved.

A WSDOT Bridge and Structures Office Design Reviewer or Coordinator will be assigned to the project and will review the project as outlined for Consultant PS&E Projects on WSDOT Right of Way.

Plans with the reviewers' comments marked in red should be returned to the Bridge Project Support Unit. One set of plans will be returned to Local Programs Office.

The first review should be made of the Preliminary Plan followed later by review of the PS&E and design calculations. Comments are treated as advisory, although major structural issues must be addressed and corrected. An engineer from the county, city, or consultant may contact the reviewer to discuss the comments.

1.3.2.D Structural Engineering and Significant Structures

Structural engineering is recognized as a specialized branch of professional engineering. An engineer must be registered as a structural engineer in order to provide structural engineering services for significant structures (see RCW 18.43.040(1)(a)(iii) & (iv)). Structural Engineering license requirement for WSDOT bridges and structures shall meet the requirement of BDM Section 1.4.3 A-7.

The practice of engineering is defined in RCW 18.43.020(5)(a). Structural engineering services for significant structures include but are not limited to practice of engineering on:

- Vertical and lateral load-resisting components of significant structures including but not limited to foundations, columns, walls, abutments, girders, beams, diaphragms, cross-bracing, floors, decks, bearings and expansion joints.
- Retaining walls and other structures adjacent to a significant structure, when the failure of the structure would affect the structural adequacy of the significant structure.

Structural engineering services for significant structures do not include:

- Practice of engineering on other structural elements of significant structures including railings, barriers, approach slabs, utility supports, and supports for miscellaneous appurtenances such as signs and luminaires. The licensed structural engineer will be responsible for designing the vertical and lateral load resisting components of the significant structure to safely resist loads from these elements.
- Engineering services of other civil disciplines, including geotechnical and hydraulic engineering services.
- Creation of specifications and estimates

Supervision of construction on significant structures for the purpose of assuring compliance with the contract requirements (see RCW 18.43.020(5)(a)) may be performed by a registered professional engineer who is not also a registered structural engineer if all changes requiring structural engineering services are referred to a registered structural engineer (WAC 196-27A-020(2)(f)).

1.3.3 Design/Check Calculation File

1.3.3.A File Format and Naming

The official Design/Check Calculation File for a structure shall be in electronic PDF format and may consist of multiple PDF files. When a project consists of multiple structures, each structure shall have a unique Design/Check Calculation File. In special circumstances, the Bridge Archive Engineer may allow multiple minor structures to be combined into a single Design/Check Calculation File.

The electronic PDF files that comprise the Design/Check Calculation File should be divided and organized in an orderly manner. A typical three-span girder highway overpass design calculation package is expected to consist of around one to five individual PDF files.

File sizes should not exceed 50 MB for each PDF file. The Design/Check Calculation File created for the PS&E submittal will eventually be electronically archived as described in Section 1.3.8, and reasonable PDF file sizes will support future download/retrieval of archive documents. Judgment should be used to determine the lowest resolution image

appropriate to legibly portray the information. For example, a 200 dpi scan may save disk space and provide reasonable clarity as compared to a 600 dpi image.

The filename for each PDF file shall be rational and shall be clearly listed in the Index Sheets (or Table of Contents). Since the electronic archiving process will tag each PDF file with the contract number and Structure ID, the filenames need only be consistent with the naming and layout described in the Index Sheets. Example filenames:

- Volume 1.pdf, Volume 2.pdf, Volume 3.pdf, etc.
- SuperDesign.pdf, SuperCheck.pdf, SubDesign.pdf, SubCheck.pdf

For the naming of PDF files for a particularly complex structure, contact the Bridge Archive Engineer.

The PDF files that comprise the Design/Check Calculation File are an electronic version of a traditional hard copy bound set of structural calculations. All PDF pages of calculation files shall be formatted to 8 ½" x 11" or to 11" x 17" sheet size so that they could be printed to hard copy without further formatting.

1.3.3.B File Inclusions

The following items should be included in the Design/Check Calculation File:

1. **Cover Sheet**

   See Section 1.3.8.

2. **Index Sheets**

   Number all calculation sheets and prepare an Index (or Table of Contents) by subject with the corresponding sheet numbers.

   List the name of the project, SR Number, designer/checker initials, date (month, day, and year), and Design Unit Manager's initials.

   The filenames of each PDF file shall be clearly listed in the Index Sheets, and it shall be clear which PDF files contain which calculation content. The Index Sheets for the structure's entire Design/Check Calculation File shall be copied and repeated at beginning of each PDF file.

3. **Design Calculations**

   The design calculations should include design criteria, design assumptions, loadings, structural analysis, moment and shear diagrams and pertinent computer input and output data.

   The design criteria, design assumptions, and special design features should follow in that order behind the index.

   Computer-generated design calculations may be used instead of longhand calculations. The calculation sheets shall be formatted similar to WSDOT standard calculation sheets (WSDOT Form 232-007) for longhand designs. The header for electronic calculation sheets shall carry WSDOT logo along with project name, S.R. number, designer and checker's name, date, supervising engineer, and sheet numbers.

   All computer-generated or longhand design calculations shall be initialed by the designer and checker. Checker's initial are not necessary if separate check calculations are provided.

Consultant submitted design calculations shall comply with the above requirements.

Design calculations prepared by Consultants shall be sealed and signed by the Engineer of Record. Design calculations are considered engineering reports and part of the process that develops contract plans which are the final documents. Electronic signatures are acceptable.

See Appendix 1.3-A1 for examples of Excel template for computer-generated design calculations. Code and other references used in developing calculations shall be specified. In general, when using Excel spreadsheet, enough information and equations shall be provided/shown in the spreadsheet so that an independent checker can follow the calculations.

4. **Special Design Features**

   Brief narrative of major design decisions or revisions and the reasons for them.

5. **Construction Problems or Revisions**

   Not all construction problems can be anticipated during the design of the structure; therefore, construction problems arise during construction, which will require revisions. Calculations for revisions made during construction should be included in the design/check calculation file when construction is completed.

1.3.3.C File Exclusions

The following items should not be included in the file:

1. Irrelevant computer information.
2. Prints of Office Standard Sheets.
3. Irrelevant sketches.
4. Voided sheets.
5. Preliminary design calculations and drawings unless used in the final design.
6. Test hole logs.

1.3.4 PS&E Review Period

See Section 12.4.10 for PS&E Review Period and Turn-in for AD Copy activities.

1.3.5 Addenda

Plan or specification revisions during the advertising period require an addendum. The Specifications and Estimate Engineer will evaluate the need for the addendum after consultation with State Construction Office, and Region Plans Branch. The Bridge Design Engineer or the Design Unit Manager must approve all addenda.

Use shading or clouding to mark all changes (except deletions) and place a revision note at the bottom of the sheet (Region and HQ Plans Branch jointly determine addendum date) and a description of the change. Return electronically-signed copies to the Specifications and Estimate Engineer who will submit the copy to the HQ Plans Branch for processing. See Chapter 12 for additional information.

For changes to specifications, submit a copy of the page with the change to the Specifications and Estimate Engineer for processing.

1.3.6 Construction Support

When submitting advertisement ready contract documents for distribution, the Design Unit Manager will identify a primary and secondary Bridge Technical Advisor (BTA) in accordance with Section 1.3.2.A.6. The Construction Support Engineer will maintain a list of all BTA assignments on the MS Team "HQ-Bridge-CN Support" providing access to all WSDOT Construction Offices.

The BTA coordinates structural support from the Bridge & Structures Office for the Project Engineer during contract work. The BTA may enlist the support of others within the Bridge Office as necessary including the original Engineer of Record or designer for the work.

Bridge Technical Advisors (BTAs) and others providing construction support shall follow the guidelines outlined in the WSDOT Construction Manual Section GEN 1-00.11 "Bridge and Structures Office Support on Design-Bid-Build Projects During Construction".

The Construction Support Supervisor, as the Bridge Office SME for Unifier, is responsible for ensuring the proper implementation and efficiency of reviews in Unifier.

1.3.6.A Shop Plans and Permanent Structure Construction Procedures

This section pertains to fabrication shop plans, weld procedures, electrical and mechanical items, geotechnical procedures, such as: drilled shafts and tieback walls, and other miscellaneous items related to permanent construction.

The following is a guide for checking shop plans and permanent structure construction procedures.

1.3.6.A.1 *Bridge Shop Plans and Procedures*

Shop Plans are typically marked up or revised electronically, using one of several available software packages for editing pdf files.

Mark each sheet with the following, near the title block, in red font, with the following information:

Contract number

Checker's initials and Date

Review Status

- No Exceptions Taken
- Make Corrections Noted
- Revise and Resubmit
- Rejected
- Structurally Acceptable
- Structurally Acceptable but does not conform to the Contract Requirements

Mark in red any errors or corrections. Comments should be "bubbled" so they stand out.

Items to be checked are typically as follows

Check against Contract Plans and Addenda, Special Provisions, Previously Approved Changes and *Standard Specifications* M 41-10.

A. Material specifications (ASTM specifications, hardness, alloy and temper, etc.).

B. Size of member and fasteners.

C. Length dimensions, if shown on the Contract Plans.

D. Finish (surface finish, galvanizing, anodizing, painting, etc.).

E. Weld size and type and welding procedure if required.

F. Strand or rebar placement, jacking procedure, stress calculations, elongations, etc.

G. Fabrication — reaming, drilling, and assembly procedures.

H. Adequacy of details.

I. Erection procedures.

For prestressed girders and post-tensioning shop plan review see Sections 5.6.3.A and 5.8.6.C respectively.

Items Not Requiring Check

1. Quantities in bill of materials.
2. Length dimensions not shown on Contract Plans except for spot checking and is emphasized by stamping the plans: *Geometry Not Reviewed by the Bridge and Structures Office*.

Marking Categories

When finished, mark the sheets with one of six categories in red font, lower right corner.

1. **"No Exceptions Taken"** No Corrections required.
2. **"Make Corrections Noted"**
   Minor corrections only. Do not place written questions on a make corrections noted sheet. No resubmittal required if noted corrections are made.
3. **"Revise and Resubmit"**
   Major corrections are required which requires a complete resubmittal. Written questions may be included.
4. **"Rejected"**
   Not acceptable, or does not meet the contract requirements. Complete resubmittal required.
5. **"Structurally Acceptable"**
   This is appropriate for items that are not required to be reviewed per the contract, such as: work platforms, submittals from various local agencies or developers, and other items that are reviewed as a courtesy.
6. **"Structurally Acceptable But Does Not Conform to the Contract Requirements"**
   This is appropriate when a deviation from the contract is found but is determined to be structurally acceptable.

If in doubt between "Make Corrections Noted" and "Revise and Resubmit", check with the Design Unit Manager or Construction Support Engineer. An acceptable detail may be shown in red, in which case the Plans would be marked. "*Make Corrections Noted*".

Notify the Design Unit Manager and the Construction Support Engineer if problems are encountered which may cause a delay in the checking of the shop plans or completion of the contract. Typically, WSDOT administered contracts require reviews to be completed within 20 calendar days for Type 2 Working Drawings and 30 calendar days for Type 3 Working Drawings. The review time starts when the Project Engineer first receives the submittal from the Contractor and ends when the Contractor has received the submittal back from the Project Engineer. The Bridge Office does not have the entire review period to complete the review. Therefore, designers should give construction reviews high priority and complete reviews in a timely manner so costly construction delays are avoided. Time is also required for marking, mailing and other processing. It is the goal of the Bridge and Structures Office to return reviewed submittals back to the Project Engineer within 7 to 14 days of their receipt by the Bridge Office.

When checking is completed, return all shop drawings to the Construction Support Unit when Bridge Construction Support is listed as a WSDOT Review Group in Figure 1-1 of the WSDOT *Construction Manual*. Return all other shop drawings directly to the Project Engineering Office, and cc the Construction Support Unit for email submittals. Include a list of any deviations from the Contract Plans that are structurally acceptable and a list of any disagreements with the Project Engineer's comments (regardless of how minor they may be). Deviations from the Contract Plans may require engineering and a Change Order. Note that changes to the contract that are also practice of engineering will require a seal by a licensed professional in accordance with the WSDOT *Construction Manual* Section SS 1-04.4 Changes/ Responsibility of Licensed Professionals for Changes to Structural Engineered Drawings During Design-Bid-Build Construction Contracts.

Under no circumstances should the reviewer mark on the shop plans that a change order is required or notify the Project Engineer that a change order is required. The authority for determining whether a change order is required rests with State Construction Engineer assigned to the project.

1.3.6.A.2 *Sign Structure, Signal, and Illumination Shop Plans*

In addition to the instructions described under Section 1.3.6.A, the following instructions apply:

1. Review the shop plans to ensure that the pole sizes conform to the Contract Plans. Determine if the fabricator has supplied plans for each pole or type of pole called for in the contract.
2. Manufacturer's details may vary slightly from contract plan requirements, but must be structurally adequate to be acceptable.

1.3.6.A.3 *Geotechnical Submittals*

The Bridge Design Office and the State Geotechnical Office concurrently review these submittals which may include special design proprietary retaining walls, drilled shafts, ground anchors, and soldier piles. The State Construction Office is included for the review of drilled shaft installation plans. The Construction Support Unit combines these comments and prepares a unified reply that is returned to the Project Engineer.

1.3.6.B Contract Changes (Change Orders and As-Builts)

1.3.6.B.1 *Request for Changes*

During construction, changes to engineered drawings are often required to address field conditions, plan errors, contractor errors, repairs, differing site conditions, etc. Changes to engineered drawings for bridges and structures after contract award and execution shall be evaluated in accordance with WSDOT *Construction Manual* Section SS 1-04.4 Changes/Responsibility of Licensed Professionals for Changes to Structural Engineered Drawings during Design-Bid-Build Construction Contracts.

The WSDOT Assistant State Construction Engineer (ASCE) assigned to the project shall be notified of any administrative issues and potential changes to the contract since they provide approval for contractual changes affecting structures. The Construction Support Unit should also be informed of any changes.

Bridge office staff shall not discuss contract work directly with Contractors or Contractor suppliers, unless doing so at the request of the Project Engineer or ASCE. If contacted by a Contractor/supplier, refer them to the Project Engineer who is administering the contract.

1.3.6.B.2 *Processing Contract Revisions*

Changes to engineered drawings for bridges and structures after contract award and execution shall be prepared in accordance with WSDOT *Construction Manual* Section SS 1-04.4 "Changes/Responsibility of Licensed Professionals for Changes to Structural Engineered Drawings during Design-Bid-Build Construction Contracts".

The designer or BTA shall sign, date, and distribute any new plan sheets to the Region Project Engineer, the ASCE assigned to the project, and the Construction Support Unit. Signed sheets shall be given to the Bridge Archive Engineer for archiving. Revisions shall include a written explanation describing the changes to the Contract, justification for the changes, and a list of material quantity additions or deletions.

This process applies to all contracts including HQ Ad and Award, Region Ad and Award, or Local Agency Ad and Award.

Whenever new plan sheets are required as part of a contract revision, the information in the title blocks of these sheets must be identical to the title blocks of the contract they are for (e.g., Job Number, Contract No., Approved by, and the Project Name). These title blocks shall also be initialed by the Bridge Design Engineer, Design Unit Manager, designer, and checker before they are distributed. If the changes are modifications made to an existing sheet, the sheet number will remain the same. A new sheet shall be assigned the same number as the one in the originals that it most closely resembles and shall be given a letter after the number (e.g., if the new sheet applies to the original sheet 25 of 53, then it will have number 25A of 53).

Every revision will be assigned a number, which shall be enclosed inside a triangle. The assigned number shall be located both at the location of the change on the sheet and in the revision block of the plan sheet along with an explanation of the change.

This process applies to all contracts Including HQ Ad and Award, Regions Ad and Award, or Local Agency Ad and Award.

1.3.6.B.3 *As-Built Plan Process*

Region Project Engineers shall prepare and submit as-built plans to the HQ Engineering Records Office in accordance with *Construction Manual* 10-3.11.

Prior to submitting the as-built plans to HQ Engineering Records, the Region Project Engineer shall submit a draft version to the Bridge Office for review. The Bridge Office BTA and designer will compare the draft as-built plans with their construction support records, and will inform the Region Project Engineer if any discrepancies are noted. This review process must be completed within 30 days.

For more information on the as-built plan process for bridges, contact the Bridge Archive Engineer.

1.3.7 Vacant

1.3.8 Archiving Design Calculations, Job Files, and S&E Files

1.3.8.A Upon Award of the Project

The designer and checker shall place a cover sheet on the Design/Check Calculation File (see Figure 1.3.8-1 for an example). The cover sheet shall include the contract number, name of the project, SR Number, designer/checker names, date, and Design Unit Manager name. The designer shall then turn the File in to the Design Unit Manager or the assigned Project Coordinator.

The Design Unit Manager or Project Coordinator shall verify that the content, PDF filenames, and Index Sheets of the Design/Check Calculation File meet the requirements of Section 1.3.3. The Design Unit Manager or Project Coordinator shall submit the Design/Check Calculations File to the Bridge Archive Engineer in PDF format.

The S&E Engineer shall submit the Job File and the S&E File to the Bridge Archive Engineer.

The hard copy Job File and S&E File will be placed in a secure temporary storage space marked as “Design Unit Document Temporary Storage”. The electronic Design/Check Calculation File will be placed on a WSDOT secure server in a location designated by the Bridge Archive Engineer.

A Bridge and Structures staff member may access the Job File, S&E File, or Design/Check Calculation File to review or make calculation revisions during construction by requesting the files from the Bridge Archive Engineer. The Bridge Archive Engineer will check out the physical or electronic files and note the date and person’s name.

Figure 1.3.8-1 Example Cover Sheet

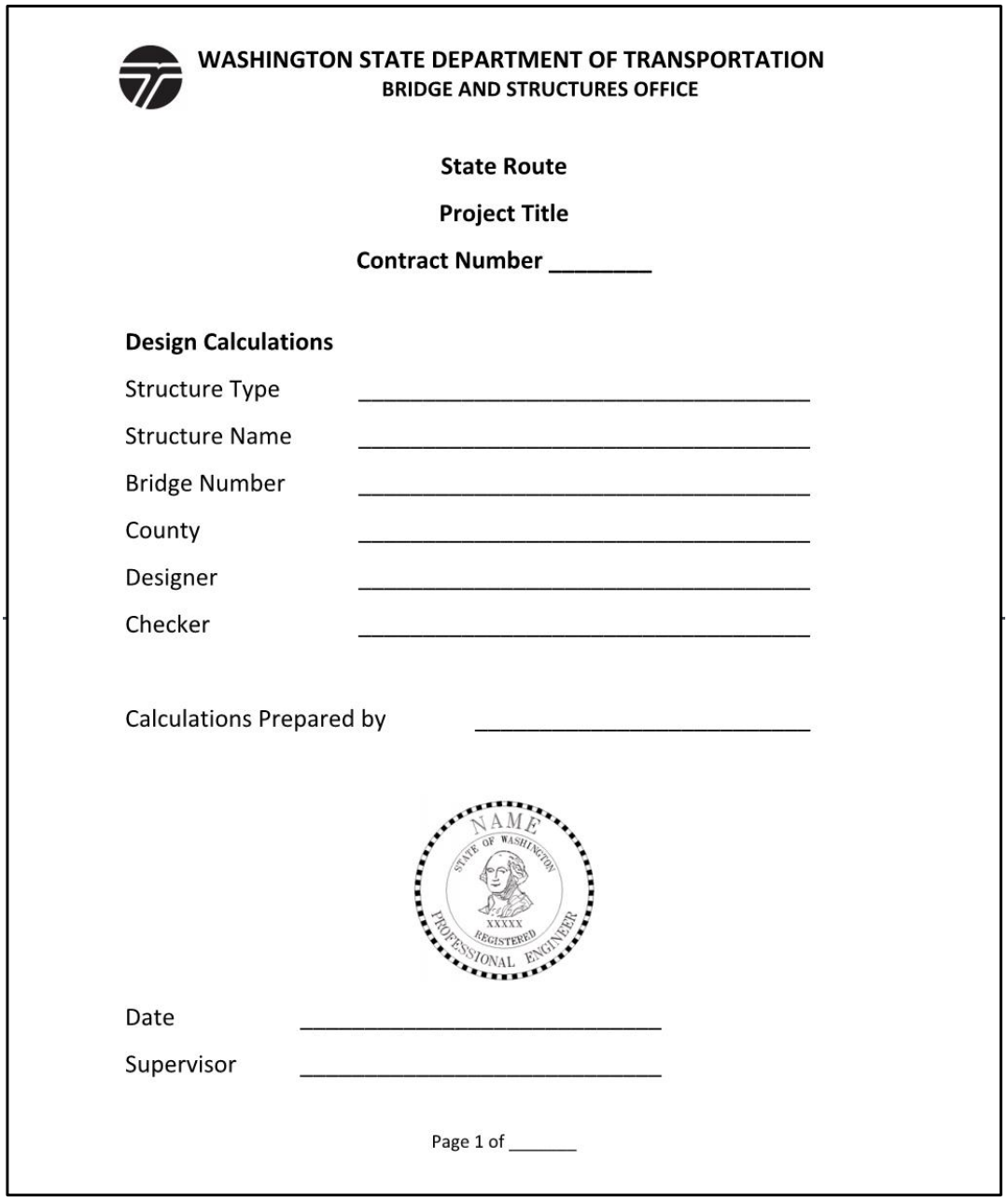

WASHINGTON STATE DEPARTMENT OF TRANSPORTATION
BRIDGE AND STRUCTURES OFFICE

State Route

Project Title

Contract Number _____

Design Calculations

Structure Type _____

Structure Name _____

Bridge Number _____

County _____

Designer _____

Checker _____

Calculations Prepared by _____

NAME
STATE OF WASHINGTON
XXXXX
REGISTERED
PROFESSIONAL ENGINEER

Date _____

Supervisor _____

Page 1 of _____

1.3.8.B Upon Physical Contract Completion

The Bridge Archive Engineer shall notify the designer and supervisor when the contract is nearing physical completion. The designer shall finalize updates to the Design/Check Calculation File to reflect any contract plan changes that have occurred during construction. Revisions to the original design calculation file and any supplemental calculation volumes shall be signed and sealed by the Engineer of Record. If the original designer no longer works for WSDOT, the Design Unit Supervisor shall ensure the Engineer of Record responsibilities during construction are executed.

The Design Unit Supervisor or designee shall upload the Design/Check Calculation File, consisting of all individual PDF files, using the WSDOT ECM Document Importer tool (see Figure 1.3.8-2). The importer is accessed through the WSDOT ECM Portal. Information required to use the Document Importer includes WSDOT Contract Number and Structure ID. The Bridge Archive Engineer shall use ILINX Capture to review the PDF files for general compliance with filename, index sheet, and cover sheet requirements and shall release the documents to the ECM archive.

Questions about using the ECM Document Importer should be directed to the Bridge Archive Engineer.

The Bridge Archive Engineer shall discard the Job File and the S&E File. Load ratings are filed with the Bridge Load Rating Engineer.

The Bridge Archive Engineer shall maintain a record of the document locations and archive status.

Figure 1.3.8-2 ECM Document Importer

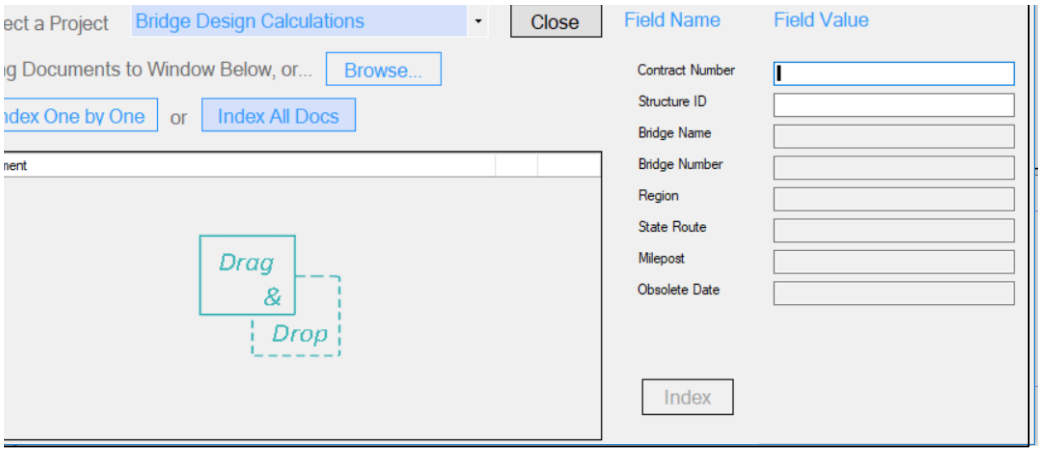

1.3.8.C Consultant Designs

Prior to Ad, the Bridge and Structures Office Project Manager will receive the following from the design Consultant in PDF form:

1. The signed and stamped project design calculations.
2. The signed and stamped structural plan sheets.

All Consultant Ad Ready signed and stamped plan sheets and calculations need to be received by the Bridge Office no later than two weeks prior to the Ad date, and submitted to the Bridge Archive Engineer upon Project Award.

Bridge Design/Check Calculation Files created by consultant shall meet the requirements described in Sections 1.3.3 and 1.3.8. Revisions to the calculations during construction shall be made as described above. The ECM archive process shall be as described except that the Bridge and Structures Office Project Manager will import the documents. It is therefore critical that the PDF files meet the format, content, filename, index sheet, and cover sheet requirements prior to completion of the consultant agreement.

1.3.8.D Design-Build and Progressive Design-Build Projects

The Design-Builder shall follow the requirements of the RFP for submission of the signed and stamped structural plan sheets and calculations. The Bridge and Structures Office's subject matter expert supporting the design-build project shall use the WSDOT ECM Document Importer to upload the PDF calculation files for archive.

1.3.9 Public Disclosure Policy Regarding Bridge Plans

The Bridge Information Technician in the BPO Information Group is the Bridge and Structures Office Public Disclosure contact and will coordinate with the WSDOT Headquarters Records Office for any release of calculations and/or reports.

Executive Order E 1023 *Public Disclosure* provides a specific procedure to follow when there is a request for public records. All external requests for WSDOT records are to follow the Public Disclosure Request process, and must be specific.

The Bridge and Structures Office is the “owner” of two types of records: (1) Design Calculations (until they are turned over to the State Records Center or ECM) and (2) Bridge Inspection Documents.

As-built plans available on the Bridge and Structures website are not “official” as-built plans. As-built plans are stored on WSDOT's ECM. Contact HQ Records for copies of these plans.

1.3.10 Use of Computer Software

1.3.10.A Policy on Open Source Software

It is the policy of the Bridge and Structures Office to license its own engineering software as open source, and to prefer and promote the use of open source software, within the bridge engineering community.

1.3.10.B Approved Software Tools

A list of approved software tools available for use by WSDOT bridge design engineers is available at www.wsdot.wa.gov/eesc/bridge/software/index.cfm. WSDOT does not require consulting engineers to use any specific software tools, so long as the use of the tools are in accordance with sound engineering practice, and does not violate software licensing agreements and Copyright law.

When using personal design tools created by others, such as a spreadsheet or MathCAD document, the designer is responsible for thoroughly checking the tool to ensure the integrity of the structural analysis and design.

1.4 Quality Control/Quality Assurance/Quality Verification (QC/QA/QV) Procedures

1.4.1 General

The purpose of the QC/QA/QV procedure is to improve the quality of the structural designs and plans. The key element to the success of this process is effective communication between all parties. The objectives of the QC/QA/QV procedure are to:

- Design structures that improve public safety and meet state regulations.
- Design structures which meet the requirements of the *Bridge Design Manual* M 23-50, AASHTO LRFD *Bridge Specifications*, current structural engineering and architectural practices, and geometric criteria provided by the Region.
- Create contract documents that meet the customer's needs, schedule, budget, and construction staging requirements.
- Maximize plan quality.
- Produce an organized and indexed set of design calculations with the criteria and assumptions included in the front after the index.
- Minimize structural and architectural design costs.

The goals are listed in order of importance. If there is a conflict between goals, the more important goal takes precedence.

The Design Unit Manager determines project assignments and the QC/QA/QV process to be used in preparation of the structural design. The intent of the QC/QA/QV process is to facilitate plan production efficiency and cost-effectiveness while assuring the structural integrity of the design and to maximize the quality of the structural contract documents.

Professional Engineering license stamp is required for all proprietary buried structures as defined in BDM Section 8.3.3 with at least 2 feet of backfill on top of the structure and placed on spread footings or has a bottom slab. Deep foundations including shafts and piles shall be stamped by a Structural Engineer.

Structural Engineering license is required for all vehicular bridges, pedestrian bridges and nonproprietary buried structures with span lengths greater than 20 ft.

Structure repairs to be performed by WSDOT maintenance forces follow the guidance in Chapter 6 of the *Washington State Bridge Inspection Manual* (WSBIM). January 2022 revisions to the WSBIM will provide guidance on plan stamping.

The stamping requirement for all other structures shall be as specified in BDM Section 1.4.3 for WSDOT Prepared PS&E, 1.4.4 for Consultant Prepared PS&E/Preliminary Plans on WSDOT Right of Way, 1.4.5 Structural Design Work Prepared Under Design-Build Method of Project Delivery, and 1.4.6 Structural Design Work Prepared Under Contractor Supplied Design Method of Project Delivery.

1.4.2 WSDOT Prepared Bridge (or Structure) Preliminary Plans

1.4.2.A Description of Terms

Quality Control (QC)

- A thorough and detail-oriented check of the engineering content of the Preliminary Plans is performed. A set of check prints is created and retained for QC documentation.
- Alignment, profile, super-elevation rates, vertical clearances, and geometry data shown on the Preliminary Plans are checked. Geometry checks may be performed by a Structural Detailer, using the appropriate CADD software.
- A set of check prints is created and retained for QC documentation.
- The job file shall be reviewed for key design decisions, and any hydraulic, geotechnical or environmental complications, etc.
- Confirm that the current design guidelines (BDM, AASHTO) and current WSDOT Bridge Office Design Policies have been followed.
- Particular attention shall be paid to documentation regarding justification for structure type selection.
- The QC task is traditionally carried out by the Preliminary Plan Checker of Record.

Quality Assurance (QA)

- A review of the Preliminary Plans is performed, based on knowledge, experience and judgment.
- Verification that the QC process has been properly followed. Verify the existence of the QC check prints.
- Confirm that the current WSDOT Bridge Office Policies and overall Preliminary Plan protocols have been followed.
- The QA task is traditionally carried out by the Bridge Projects Unit Manager.

Quality Verification (QV)

- Confirm that the QA process has been properly followed.
- A review of the Preliminary Plans is performed, based on knowledge, experience and judgment (this may also add QA value).
- The QV task is traditionally carried out by the State Bridge Design Engineer.

The QC/QA/QV procedures may vary depending on the type and complexity of the Preliminary Plan being created, and the experience level of the Engineers involved. More supervision, review, and checking may be required when the Engineers are less experienced.

1.4.3 WSDOT Prepared PS&E

1.4.3.A Plans, Calculations and Quantities Prepared by WSDOT Bridge and Structures Office

1.4.3.A.1 *Description of Terms*

Quality Control (QC)

- A thorough and detail-oriented check of the engineering content of the plans is performed. A set of check prints is created and retained for QC documentation.
- The Designer's calculations are also checked. A set of check calculations is created and retained for documentation.
- The QC task is traditionally carried out by the Checker of Record.

Quality Assurance (QA)

- A review of the plans is performed, based on knowledge, experience and judgment. A set of check prints is created and retained for QA documentation.
- The Designer's calculations are reviewed, based on knowledge, experience and judgment. Spot-checks may be included. Independent calculations are not typically produced.
- Verification that the QC process has been properly followed. Verify the existence of QC Check Prints and Check Calculations.
- Confirm that the current design guidelines (BDM, AASHTO) and current WSDOT Bridge Office Design Policies have been followed.
- The QA task is traditionally carried out by the Design Unit Manager.

Quality Verification (QV)

- Confirm that the QA process has been properly followed. Verify the existence of QA Check Prints.
- A review of the plans is performed, based on knowledge, experience and judgment (this may also add QA value).
- The QV task is traditionally carried out by the State Bridge Design Engineer.

The QC/QA/QV procedures may vary depending on the type and complexity of the structure being designed, and the experience level of the design team members. More supervision, review, and checking may be required when the design team members are less experienced.

1.4.3.A.2 *Designer Responsibility*

The Designer is responsible for the engineering content of the contract plan sheets, including structural analysis, completeness and correctness.

Upon completion of the QC/QA/QV process, the Designer shall prepare the QC/QA/QV Checklist, and obtain signatures/initials as required. This applies to all projects regardless of type or importance (bridges, retaining walls and noise barrier walls, overhead sign structures, bridge deck overlays, traffic barriers, etc.). Refer to Appendix 1.4-A1.

1.4.3.A.3 *Checker Responsibility*

The Checker is responsible to the Design Unit Manager for Quality Control of the structural design, which includes checking the design, plans, calculations and quantities to assure accuracy and constructability. The Design Unit Manager works with the Checker to establish the level of checking required. The checking procedure for assuring the quality of the design will vary from project to project. Following are some general checking guidelines:

1. **Job File**

   Scan the job file for unconventional or project specific items relating to geometrics, hydraulics, geotechnical, environmental, etc.

2. **Design Calculations**

   The design calculations may be checked by either of two methods:

   Design calculations may be checked with a line-by-line review and initialing by the Checker. If it is more efficient, the Checker may choose to perform his/her own independent calculations.

   Iterative design methods may be best checked by review of the Designer's calculations, while standard and straight-forward designs may be most efficiently checked with independent calculations. The Designer and Checker calculations shall both be retained for archiving.

   Revision of design calculations, if required, is the responsibility of the Designer.

3. **Structural Plans**

   The Checker's plan review comments are recorded on a set of check prints, including details and bar lists, and returned to the Designer for consideration. These check prints are a vital part of the checking process, and shall be preserved. If the Checker's comments are not incorporated, the Designer should provide justification for not doing so. If there is a difference of opinion that cannot be resolved between the Designer and Checker, the Design Unit Manager shall resolve any issues. Check prints shall be submitted to the Design Unit Manager at the time of 100 percent PS&E turn-in.

   If assigned by the Design Unit Manager, a structural detailer shall perform a complete check of the geometry using CADD or hand calculations.

   Revision of plans, if required, is the responsibility of the designer.

4. **Quantities and Barlist**

   The Checker shall provide an independent set of quantity calculations. These together with the Designer's quantity calculations shall be placed in the job file.

   Resolution of differences between the Designer and Checker shall be completed before the Bridge PS&E submittal. See Section 12.2.2 for procedures and requirements. The Checker shall also check the barlist.

1.4.3.A.4 *Specialist/Bridge and Structures Architect Responsibility*

Specialist reviews are typically cursory in nature, are not intended to fulfill the role of the Checker, and should be considered as Quality Assurance (QA). Specialists shall perform reviews and initial the Project Turn-In QC/QA/QV Worksheet of BDM Appendix 1.4-A1 at the 100 percent completion stage of certain projects including:

- **Bearing and Expansion Joint Specialist** – All expansion joint or bearing rehabilitation projects. All new bridges with modular expansion joints, unique strip seal joints (high skew, raised steel sliding plates at sidewalk, traffic islands, etc.), and bearings other than conventional elastomeric pads.
- **Concrete Specialist** – All post-tensioned super and substructures, and complex prestressed girder superstructures (long spans, large skews, tapered girders, etc.). All structures utilizing mass concrete, self-consolidating concrete (SCC), shotcrete or Grade 80 reinforcement.
- **Steel Specialist**– All new and retrofit steel superstructure projects or projects involving significant or complex welding.
- **Substructure/Seismic Specialist** – All drilled shaft foundations, and any foundations involving Concrete Filled Structural Tube (CFST) or Reinforced Concrete Filled Structural Tube (RCFST) technology. All retrofit projects, and new bridges with complex seismic design requirements.
- **State Bridge and Structures Architect** – Responsible for review and approval of all Bridge & Structure projects for appropriate application of the Context Sensitive Design process and related architectural design. The Architect's involvement shall include, but not be limited to, TS&L studies, Preliminary Plans, and PS&E design-level plans.

1.4.3.A.5 *Design Unit Manager Responsibility*

The Design Unit Manager is responsible to the Bridge Design Engineer for Quality Assurance (QA) of the structural design, which includes reviewing the design, plans and specifications for consistency and constructability. The Design Unit Manager shall review the plans for the following:

Review the Design Criteria.

Design Criteria

- Seismic design methodology, acceleration coefficient ("a" value), and any seismic analysis assumptions.
- Foundation report recommendations, selection of alternates.
- Deviations from AASHTO, this manual and proper consideration of any applicable Design Memorandums. Review constructability issues. Are there any problems unique to the project?
- The Design Unit Manager shall also review the following:
- Overall review of sheet #1, the bridge layout for:

  A. Consistency — especially for multiple bridge project

  B. Missing Information

- Review footing layout for conformance to Bridge Plan and for adequacy of information given. Generally, the field personnel shall be given enough information to "layout" the footings in the field without referring to any other sheets. Plan details shall be clear, precise, and dimensions tied to base references, such as a survey line or defined centerline of bridge. Any special circumstances regarding excavation quantities (structure exc. vs. roadway exc. delineation) shall also be detailed.
- Review the sequence of the plan sheets. The plan sheets should adhere to the following order: layout, footing layout, substructure, superstructure elements, miscellaneous details, barriers, railings, bridge approach slab, and barlist. Also check for appropriateness of the titles.
- Review overall dimensions and elevations, spot check for compatibility. For example, check compatibility between superstructures and substructure. Also spot check bar marks. Use common sense and experience to review structural dimensions and reinforcement for structural adequacy. When in doubt, question the Designer and Checker.

1.4.3.A.6 *State Bridge Design Engineer's Responsibilities*

The State Bridge Design Engineer is responsible for Quality Verification (QV) of the structural design process, and acts as the coach, mentor, and facilitator for the WSDOT QC/QA/QV Bridge Design process. The following summarizes the key responsibilities of the State Bridge Design Engineer related to QC/QA/QV.

- The State Bridge Design Engineer shall perform a structural/constructability review of the plans. This is a Quality Verification (QV) function as well as meeting the "responsible charge" requirements of state laws relating to Professional Engineers.
- Review unique project special provisions and *Standard Specifications*

1.4.3.A.7 *General Bridge Plan Stamping and Signature Policy*

The stamping and signing of bridge plans are the final step in the Bridge QC/QA/ QV procedure. It signifies a review of the plans and details by those in responsible charge for the bridge plans.

The revised bridge and structures plan stamping, and signature policy requires at least one licensed Structural Engineer, SE stamp and sign each contract plan sheet except for architectural detail sheets, bar list, and as specified herein:

A. Structural Engineering license, SE is required for all vehicular and pedestrian bridges with span lengths greater than 20 ft

B. Structural Engineering license, SE is required for non-proprietary buried structures with span lengths greater than 20 ft that are designed by the WSDOT Bridge Office or Consultants.

C. Structural Engineering, SE license is required for the foundation elements of proprietary buried structures placed on pile or shaft foundation. The non-foundation elements may be stamped by a Professional Engineer.

D. Structure repairs to be performed by WSDOT maintenance forces follow the guidance in Chapter 6 of the *Washington State Bridge Inspection Manual* (WSBIM). January 2022 revisions to the WSBIM will provide guidance on plan stamping.

For contract plans prepared by a licensed Civil or Structural Engineer, the Design Unit Manager and the licensed Civil or Structural Engineer co-stamp and sign the plans, except the bridge layout sheet. The bridge layout sheet is stamped and signed by the State Bridge Design Engineer.

As an exception to the requirements above, the State Bridge and Structures Engineer reserves the right to stamp and sign any plan sheet, while in conformance with and meeting the legal requirements of RCW 18.43.020.

For contract plans prepared by a designer who is not a licensed Civil or Structural Engineer, the Design Unit Manager and the State Bridge Design Engineer co-stamp and sign the plans except the bridge layout sheet. Alternatively, Design Unit Manager and the S.E. Licensed Engineer supervising the design work (if applicable) could co-stamp and sign the plans. The bridge layout sheet is stamped and signed by the State Bridge Design Engineer.

For Non-Standard Retaining Walls and Noise Barrier Walls, Sign Structures, Seismic Retrofits, Expansion Joint and Bearing Modifications, Traffic Barrier and Rail Retrofits, and other special projects, the Design Unit Manager with either the licensed designer or the State Bridge Design Engineer (if the designer is not licensed) co-seal and sign the plans except for the layout sheet. The layout sheets for these plans are sealed and signed by the State Bridge Design Engineer.

All plan sheets shall be signed electronically using the Certification Sheet Process established by WSDOT HQ Design Office, providing a locked PDF plan set for Advertisement.

1.4.3.B Specifications and Estimates (S&E) Prepared by WSDOT Bridge and Structures Office

1.4.3.B.1 *Description of Terms*

Quality Control (QC)

- A thorough and detail-oriented check of the Specifications Run List is performed. Special Provisions are reviewed for content, and for consistency with the Plans. Fill-in values in the Special Provisions are reviewed for accuracy.
- Transcription of the Designer-supplied quantities into the Engineers Estimate is checked. Unit bid prices assigned are reviewed.
- Project Duration calculations, and any required project scheduling assumptions are checked for accuracy and consistency.
- A set of QC Review Comments is created, and retained for documentation.
- The QC task is traditionally carried out by the Specification and Estimate Engineer assigned to the Project.

Quality Assurance (QA)

- A review of the Specifications and Estimate is performed, based on knowledge, experience and judgment.
- Consistency with the Plans shall be emphasized.
- Verification that the QC process has been properly followed. Verify the existence of QC Review Comments.

- Confirm that the current WSDOT Bridge Office Policies and overall S&E organization protocols have been followed.
- Responsibility for the QA task belongs with the Bridge Projects Unit Manager.

Quality Verification (QV)

- Confirm that the QA process has been properly followed.
- A review of the Specifications and Estimate is performed, based on knowledge, experience and judgment (this may also add QA value).
- The QV task is traditionally carried out by the State Bridge Design Engineer.

1.4.3.B.2 *General Specification and Estimate Stamping and Signature Policy*

The stamping and signing of the Certified Bridge Specifications and Estimate is the final step in the S&E QC/QA/QV procedure. It signifies a completed review of the Specifications and Estimate by those in responsible charge. The Specifications and Estimate Engineer responsible for S&E for the project shall stamp and sign the Specifications and Estimate Cover Sheet. The Certified Bridge Specifications and Estimate document is sent to the Project Engineer of the Region PE Office responsible for the overall design of the project for the retention in the Project Design File.

The Specifications and Estimate Cover Sheet shall be signed using an electric signature in accordance with the HQ electronic signature policy.

1.4.4 Consultant Prepared PS&E/Preliminary Plans on WSDOT Right of Way

Plans, Quantities and Calculations, or Specifications and Estimates, or Preliminary Plans prepared by Consultants shall follow the individual Consultant's own QC/QA procedures. Also, as a minimum, the Consultant's QC/QA procedures shall include the features described above for similar WSDOT prepared work.

Preliminary Plans prepared by Consultants shall be reviewed and approved by WSDOT Bridge Office and Regional Engineering Manager (or Project Development Engineer) for the project.

The Consultant Prepared PS&E/Preliminary Plans on WSDOT Right of Way shall follow the General Bridge Plan Stamping and Signature Policy of BDM Section 1.4.1.

WSDOT's role in Consultant-prepared engineering work will be Quality Verification only. The Consultant shall be relied upon to provide their own QC/QA effort and oversight. WSDOT'S QV task is traditionally carried out by the designated WSDOT Bridge Design Reviewer or Coordinator for the project. The WSDOT Bridge Design Reviewer/ Coordinator's QV responsibilities shall include:

1. Review Consultant's Preliminary Plans. Upon resolution of all review comments, the Preliminary Plan Reviewer shall submit the Preliminary Plans to the Bridge Design Engineer and to the Regional Engineering Manager (or Project Development Engineer) for their review and signature.
2. Review Consultant's design calculations and plans for completeness and conformance to Bridge Office design practice. The plans shall be checked for constructability, consistency, clarity and compliance. Also, selectively check dimensions and elevations.
3. At the 100 percent turn-in milestone, verify that the Consultant's own QC/ QA processes have been followed, and, as a minimum, that WSDOT's QC/QA requirements for similar work have been met.

1.4.5 Structural Design Work Prepared Under Design-Build Method of Project Delivery

Structural design work prepared by others under a Design-Build contract shall follow the QC/QA procedures outlined in the approved project-specific Quality Management Plan (QMP). As a minimum, the QMP procedures shall include the features described above for similar WSDOT prepared work.

The Structural Design Work Prepared Under Design-Build Method of Project delivery shall follow the plan stamping and signature policy of RFP Section 2.13.

WSDOT's role in Design-Build engineering work will be Quality Verification only. The outside designers shall be relied upon to provide their own QC/QA effort and oversight, per the project's approved QMP. WSDOT'S QV task is traditionally carried out by the designated WSDOT Bridge Design Reviewer or Coordinator for the project. The WSDOT Bridge Design Reviewer/Coordinator's QV responsibilities shall include:

1. Review Design-Build design calculations and plans for completeness and conformance to Bridge Office design practice and applicable RFP requirements. The plans shall be checked for constructability, consistency, clarity and compliance. Also, selectively check dimensions and elevations.
2. At the Release For Construction (RFC) turn-in milestone, verify that the Design-Build QC/QA processes have been followed (as outlined in the approved QMP), and, as a minimum, that WSDOT's QC/QA requirements for similar work have been met.

1.4.6 Structural Design Work Prepared Under Contractor Supplied Design Method of Project Delivery

The Structural Design Work Prepared Under a Contractor Design Method of Project delivery shall follow the General Bridge Plan Stamping and Signature Policy described in BDM Section 1.4.3.A.7 A, B and C above.

WSDOT's role in Contractor Supplied Design engineering work will be Quality Verification only. The Contractor shall provide their own QC/QA effort and oversight. WSDOT'S QV task is traditionally carried out by the designated WSDOT Bridge Technical Advisor or Coordinator for the project.

As a minimum, the QC/QA procedures shall include the features described above for similar WSDOT prepared work. For Contractor Supplied design work for buried structures, the Contractor shall be responsible for carrying out a thorough check of the plans and calculations, meeting or exceeding the requirements described in BDM Appendix 1.4-A2.

The WSDOT Bridge Technical Advisor or Coordinator's QV responsibilities shall include: Review Contractor Supplied Design calculations and plans for completeness and conformance to Bridge Office design practice. The plans shall be reviewed for constructability, consistency, clarity and compliance. Dimensions and elevations shall also be selectively reviewed.

1.5 Bridge Design Scheduling

1.5.1 General

The Bridge Projects Unit Manager is responsible for workforce projections, scheduling, receiving new work requests coming into the Bridge Design office, and monitoring progress of projects. The *Bridge Design Schedule (BDS)* is used to track the progress of a project and is updated monthly by the Bridge Scheduling Engineer. A typical project would involve the following steps:

1. Regions advise Bridge and Structures Office of an upcoming project.
2. The Bridge Project Support Unit determines the scope of work, estimates design time and cost to prepare preliminary plans, design, and S&E (see Section 1.5.2). The Design Unit Manager may also do this and notify the Bridge Project Support Engineer.
3. The project is entered into the BDS with start and due dates for site data preliminary plan, project design, PS&E, and the Ad Date.
4. Bridge site data received.
5. Preliminary design started.
6. Final Design Started – Designer estimates time required for final plans (see Section 1.5.3).
7. Geotechnical information received
8. Hydraulic information received
9. Monthly Schedule Update – Each Design Unit Manager is responsible for maintaining a workforce projection, monitoring monthly progress for assigned projects, and reporting progress or any changes to the scope of work or schedule to the Bridge Scheduling Engineer.
10. Project turned in to S&E unit.

1.5.2 Preliminary Design Schedule

The preliminary design estimate done by the Bridge Project Support Unit is based on historical records from past projects taking into consideration the unique features of each project, the efficiencies of designing similar and multiple bridges on the same project, designer's experience, and other appropriate factors.

1.5.3 Final Design Schedule

1.5.3.A Breakdown of Project Staff-Hours Required

Using a spreadsheet, list each item of work required to complete the project and the staff-hours required to accomplish them. Certain items of work may have been partially completed during the preliminary design.

The designer or design team leader should research several sources when making the final design time estimate. The following are possible sources that may be used:

The "Bridge Design Summary" contains records of design time and costs for past projects. This summary is kept in the Bridge Project Support Unit. The times given include preliminary plan, design, check, drafting, and supervision.

The Bridge Project Support Unit has "Bridge Construction Cost Summary" books. These are grouped according to bridge types and have records of design time, number of drawings, and bridge cost.

1.5.3.B Estimate Design Time Required

The design team leader or the Design Unit Manager shall determine an estimate of design time required to complete the project. The use of a spreadsheet, or other means is encouraged to ensure timely completion and adherence to the schedule. Use 150 hours for one staff month.

The following percentages should be used for the following activities:

Activity No.	Percentage
1 Design	40
2 Design Check	20
3 Drawings	20
4 Revisions	5
5 Quantities	5
6 S&E	5
7 Project Review	5
Total	100%

The individual activities include the specific items as follows under each major activity.

Activity No. 1 Design — See Section 1.3.2.A.2 — Includes:

1. Project coordination and maintaining the Design File.
2. Geometric computations.
3. Design calculations.
4. Complete check of all plan sheets by the designer.
5. Compute quantities and prepare barlist.
6. Preparing special provisions checklist.
7. Assemble backup data covering any unusual feature in the Design File.

Activity No. 2 Design Check — See Section 1.3.2.A.3 — Includes:

1. Checking design at maximum stress locations.
2. Checking major items on the drawings, including geometrics.
3. Additional checking required.

Activity No. 3 Drawings — See Section 1.3.2.A.4 — Includes:

1. Preparation of all drawings.

Activity No. 4 Revisions — Includes:

1. Revisions resulting from the checker's check.
2. Revisions resulting from the Design Unit Manager's review.
3. Revisions from S&E Engineer's review.
4. Revisions from Region's review.

Activity No. 5 Quantities — Includes:

1. Compute quantities including barlist.
2. Check quantities and barlist.

Activity No. 6 S&E — See Section 12.4 — Includes:

1. Prepare S&E.
2. Prepare working day schedule.

Activity No. 7 Project Review — Includes:

1. Design Unit Manager and Specialist's review.

1.5.3.C Monthly Project Progress Report

The designer or design team leader is responsible for determining monthly project progress and reporting the results to the Design Unit Manager. The Design Unit Manager is responsible for monthly progress reports using information from the designer or design team leader. Any discrepancies between actual progress and the project schedule must be addressed. Report any revisions to the workforce assigned to the project, hours assigned to activities, or project schedule revisions to the Bridge Design Engineer and Region.

The designer may use a spreadsheet, to track the progress of the project and as an aid in evaluating the percent complete. Other tools include using a spreadsheet listing bridge sheet plans by title, bridge sheet number, percent design complete, percent design check, percent plan details completed, and percent plan details checked. This data allows the designer or design team leader to rapidly determine percent of project completion and where resources need to be allocated to complete the project on schedule.

1.6 Guidelines for Bridge Site Visits

When conducting site visits, the design team shall conform to the safety requirements of WSDOT and the Contractor. WSDOT safety requirements are included in the Secretary of Transportation's Executive Order E 1033, the WSDOT *Safety Procedures and Guidelines Manual* M 75-01 and other policy documents. Contractor safety requirements are included in the safety plan for the site (see *Standard Specifications* section 1-07.1 and the WSDOT *Construction Manual* Section SS 1-07.1). Personal protective equipment shall be used as appropriate. A pre-activity safety plan is required prior to any site visit.

When visiting sites that are not under construction, it is recommended to consult Region personnel beforehand. They are typically familiar with the site and can provide escort and traffic control if necessary. Traffic control may require significant advance notice.

In some cases, an in-depth inspection with experienced BPO inspectors is appropriate. The decision to perform an in-depth inspection should include the Design Unit Manager, Region, the State Bridge Design Engineer, and the State Bridge Preservation Engineer.

It may be necessary to use inspection equipment such as BPO's Under Bridge Inspection Trucks (UBIT) to access details and obtain measurements during a site visit. Advance planning and coordination with BPO and the Region project office will be necessary if inspection equipment is required because of BPO's heavy workload and the need to provide traffic control well in advance of the site visit.

When visiting construction sites, Region personnel shall be consulted beforehand. They will be familiar with the safety plan for the site and will be able to educate the design team on the safety plan. They will also be able to provide escort and arrange for traffic control if necessary.

1.6.1 Existing Structure Modifications

It is critical that the design team know as much as possible about the existing structure. Recent inspection reports, prepared by inspectors from the Bridge Preservation Office (BPO), contain useful information on the condition of existing structures. The inspection reports, as well as as-built plans, are available on the Intranet through Bridge Engineering Information System (BEIST). As-built plans are also available from the Regions through the Enterprise Content Management (ECM) Portal. The WSDOT Maintenance Operations Division documents maintenance work on existing structures in the MPET and HATS systems, which can be another source of information for the design team. As-built plans, inspection documentation and maintenance documentation are helpful, but may not necessarily be accurate or complete.

Site visits are recommended when modifying existing bridges. However, if there is any doubt about the adequacy of the available information or concern about accelerated deterioration of the structural elements, a site visit is required. Region personnel or others may perform the site visit to obtain the information needed to detail existing conditions, especially for remote or difficult to access locations.

Site visits are especially important for expansion joint rehabilitation projects. On many recent expansion joint rehabilitation projects, field conditions during construction have not matched as-built and contract plan details. This can cause large impacts in construction since new steel joint components are typically prefabricated and typically must be installed in a short time frame or closure. Consideration should be given to exposing portions of existing expansion joints to confirm as-built or plan details either during design or by the Contractor during construction. When done by the Contractor:

- The plans should include new expansion joint details based upon the information available to the design team
- Adequate time should be given in the Contract between the investigation and the installation of the new joint assembly (typically at least four weeks) to allow for possible redesign and fabrication
- A materials procurement suspension should be considered.

1.6.2 New Structures

Generally, photographs and site data from the Region are adequate for most new structure designs. However, if the new structure is a replacement for an existing structure, a site visit is recommended, particularly if the project requires staged removal of the existing structure and/or staged construction of the new structure.

1.6.3 Structure Demolition

If structure demolition is required as part of a project, a site visit is recommended for the design team to determine if there are unique site restrictions that could affect the demolition. If unique site restrictions are observed, they should be documented, included in the job file, and noted on the special provisions checklist.

1.7 Appendices

Appendix 1.1-A1	Bridge Design Manual Revision QC/QA Worksheet
Appendix 1.2-A1	Bridge & Structures Design Office Workflow
Appendix 1.3-A1	Bridge & Structures Design Calculations
Appendix 1.4-A1	QC/QA Signature Sheet
Appendix 1.4-A2	Min. Requirements for Check of Contractor-Design Buried Structure

Appendix 1.1-A1 Bridge Design Manual Revision QC/QA Worksheet

	Name	Approval Signature	Date
Revision Author			
Revision Checker			
Chapter Author			
Bridge Design Engineer			
BDM Coordinator			
Check of Revised Sheets			
Revision Description:			

Appendix 1.2-A1 Bridge & Structures Design Office Workflow

REGION/SPECIALTY PROVIDED DATA	BRIDGE & STRUCTURES DESIGN OFFICE WORK FLOW		
	WORK PHASE	WORK ITEMS	PRIMARY CONTACT
	SCHEDULING	• BRIDGES • BURIED STRUCTURES • WALLS • RAILINGS • DECK REPAIR • EXPANSION JOINTS	BRIDGE PROJECTS UNIT MANAGER
STRUCTURE SITE DATA →	PRELIMINARY DESIGN	• PRELIMINARY DESIGN • PRELIMINARY ESTIMATE	PRELIMINARY PLAN ENGINEER OR BRIDGE DESIGN UNIT MANAGER/LEAD with QV by PRELIMINARY DESIGN ENGINEER
GEOTECH/HYDRAULIC REPORT →	STRUCTURAL DESIGN	• STRUCTURAL DESIGN • INTERMEDIATE REVIEW	BRIDGE DESIGN UNIT MANAGER
	SPECIFICATIONS & COST ESTIMATES	• PRE-SUBMITTAL REVIEW • FINAL PS&E • AD COPY	BRIDGE PROJECT SUPPORT ENGINEER OR BRIDGE DESIGN UNIT MANAGER/LEAD with QV by SPECIFICATION & COST ESTIMATE ENGINEER
	CONSTRUCTION SUPPORT	• REVIEW FALSEWORK • REVIEW DEMO PLAN • REVIEW EXCAVATION • REVIEW SHORING • REVIEW RFIS • REVIEW SHOP DRAWING • REVIEW REPAIR PROCEDURES	CONSTRUCTION SUPPORT SUPERVISOR OR BRIDGE TECHNICAL ADVISOR

Appendix 1.3-A1 Bridge & Structures Design Calculations

Washington State Department of Transportation

Bridge & Structures Design Calculations

Project			Sheet No. 1 of 1 Sheets		Code Reference
S.R.	Made By	Check By	Date 7/7/10	Supv	

C:\AAWork\Bridge Template.xlsx Sheet1

Appendix 1.4-A1 QC/QA Signature Sheet

PROJECT TURN-IN QA/QC WORKSHEET (per BDM Chapter 1.3)

Project Name:

Charge Number:
Design Lead:
Date:

Design Item	Name	Approval Names Listed: DESIGNER	CHECKER	DETAILER	CHECKLIST (Initials required under respective title): SPECIFICATION WRITER	BRIDGE & STRUCTURES ARCHITECT	SPECIALIST APPROVAL: BEARING AND EXPANSION JOINT	CONCRETE	STEEL	SUBSTRUCTURE	SEISMIC	JOB FILE COMPLETE	CALCULATIONS * COMPLETE	SITE VISIT

Bridge Design Engineer Check at 90%: _____ Date _____
Signature

Supervisor Plan Review: _____ Date _____
Signature

NOTES:

Required Actions for each Design Item:

1) Accurate & Complete Design
2) Elevations and Dimensions
3) Quantities and Barlist
4) Detailing Sheet Consistency
5) Detailing Plan Consistency
6) Detailing Office Practices
7) Specification Review
8) 100% Region Comments Incorporated

* The stamped and signed Design/Check Calculation File meets the requirements of BDM 1.3.3 and 1.3.8.

Appendix 1.4-A2 Min. Requirements for Check of Contractor-Design Buried Structure

The following items shall be reviewed and verified by the Checker:

1. Conformance with alignment, profile, and dimensions as required in the Contract Documents.
2. Traffic Staging and Maintenance of Traffic requirements satisfied.
3. Conformance with AASHTO LRFD and WSDOT BDM requirements.
4. Conformance with Hydraulic Report requirements.
5. Scour and Stream Migration parameters accounted for.
6. Conformance with Geotechnical Report requirements.
7. Depth and extent of any Over-Excavation/Backfill or Ground Improvement requirements satisfied.
8. Seventy Five (75) Year Design Life requirement met or exceeded.
9. Strength, Service, and Extreme Limit State design requirements satisfied.

The calculations may be checked by either of two methods:

- A line-by-line review and initialing by the Checker.
- Independent calculations created by the Checker.

1.99 References

1. AASHTO *LRFD Bridge Design Specifications*, Latest Edition and Interims. American Association of State Highway and Transportation Officials (LRFD-BDS), Washington, D.C.
2. *Design Manual* M 22-01
3. *Construction Manual* M 41-01
4. *As-Built Plans Manual*, WSDOT Bridge and Structures Office, August 2003
5. *AASHTO Guide Specifications for LRFD Seismic Bridge Design*, Latest Edition and Interims. American Association of State Highway and Transportation Officials (LRFD-SGS), Washington, D.C.

Chapter 2 Preliminary Design Contents

2.1 Preliminary Studies 2-1
2.1.1 Interdisciplinary Design Studies 2-1
2.1.2 Value Engineering Studies 2-1
2.1.3 Preliminary Recommendations for Bridge Rehabilitation Projects 2-2
2.1.4 Preliminary Recommendations for New Bridge Projects 2-2
2.1.5 Type, Size, and Location (TS&L) Reports 2-3
2.1.5.A TS&L General 2-3
2.1.5.B TS&L Outline 2-4
2.1.5.B.1 Cover, Title Sheet, and Index 2-4
2.1.5.B.2 Photographs 2-4
2.1.5.B.3 Introduction 2-4
2.1.5.B.4 Project Description 2-4
2.1.5.B.5 Design Criteria 2-5
2.1.5.B.6 Structural Studies 2-5
2.1.5.B.7 Executive Summary 2-5
2.1.5.B.8 Drawings 2-5
2.1.5.C Reviews and Submittals 2-5
2.1.6 Alternate Bridge Designs 2-6
2.2 Preliminary Plan 2-7
2.2.1 Development of the Preliminary Plan 2-7
2.2.1.A Process and Sequence of Development 2-7
2.2.1.A.1 Schedule 2-7
2.2.1.A.2 Structure Site Data 2-7
2.2.1.A.3 Preliminary Plan Design Assignment 2-7
2.2.1.A.4 Preliminary Plan Development 2-8
2.2.1.A.5 Initial Internal Review 2-8
2.2.1.A.6 Request for Geotechnical and Hydraulics Information . 2-9
2.2.1.A.7 Cost Estimate 2-9
2.2.1.A.8 Distribution for Preliminary Plan Approval 2-9
2.2.1.A.9 Distribution of Final Preliminary Plan 2-9
2.2.1.B Responsibilities 2-9
2.2.1.C Site Reconnaissance 2-10
2.2.1.D Coordination 2-10
2.2.1.E Consideration of Alternatives 2-10
2.2.1.F Designer Recommendation 2-11
2.2.1.G Concept Approval 2-11
2.2.1.H Consideration for Accelerated Bridge Construction 2-11

2.2.2 Documentation . . . 2-11
2.2.2.A Job File . . . 2-11
2.2.2.B Structure Site Data . . . 2-11
2.2.2.C Design Report or Design Summary and Value Engineering Studies . 2-12
2.2.2.D Other Resources . . . 2-12
2.2.2.E Notes . . . 2-12
2.2.3 General Factors for Consideration . . . 2-12
2.2.3.A Site Requirements . . . 2-12
2.2.3.B Safety . . . 2-12
2.2.3.C Economic . . . 2-12
2.2.3.D Structural . . . 2-13
2.2.3.E Environmental . . . 2-13
2.2.3.F Aesthetic . . . 2-13
2.2.3.G Construction . . . 2-13
2.2.3.H Hydraulic . . . 2-13
2.2.3.I Maintenance . . . 2-13
2.2.3.J Bridge Security . . . 2-13
2.2.3.K Alternatives . . . 2-14
2.2.3.L Other . . . 2-14
2.2.4 Permits . . . 2-14
2.2.4.A Coast Guard Waterway Jurisdiction and Navigation Permits for New Construction . . . 2-14
2.2.4.B Coast Guard Temporary Regulation Adjustments for Construction Operations at Existing Structures . . . 2-15
2.2.4.C Other . . . 2-15
2.2.5 Preliminary Cost Estimate . . . 2-15
2.2.6 Approvals . . . 2-16
2.2.6.A State Bridge and Structures Architect/Specialists . . . 2-16
2.2.6.B Bridge and Buried Structures Design . . . 2-17
2.2.6.C Region . . . 2-17
2.2.6.D Railroad . . . 2-18
2.3 Preliminary Plan Criteria . . . 2-19
2.3.1 Highway Crossings . . . 2-19
2.3.1.A General . . . 2-19
2.3.1.A.1 Mainline Highway Crossings . . . 2-19
2.3.1.A.2 Ramp Highway Crossings . . . 2-19
2.3.1.B Bridge Width . . . 2-19
2.3.1.C Horizontal Clearances . . . 2-19
2.3.1.D Vertical Clearances . . . 2-21
2.3.1.E End Slopes . . . 2-21
2.3.1.F Determination of Bridge Length . . . 2-21
2.3.1.G Pedestrian Crossings . . . 2-22
2.3.1.H Bridge Redundancy . . . 2-22

2.3.2 Railroad Crossings . . . 2-23
2.3.2.A General . . . 2-23
2.3.2.B Criteria . . . 2-23
2.3.2.C Bridge Width . . . 2-23
2.3.2.D Horizontal Clearances . . . 2-23
2.3.2.E Crash Walls . . . 2-23
2.3.2.F Vertical Clearances . . . 2-24
2.3.2.G Determination of Bridge Length . . . 2-24
2.3.2.H Special Considerations . . . 2-24
2.3.2.I Construction Openings . . . 2-24
2.3.3 Water Crossings . . . 2-25
2.3.3.A Bridge Width . . . 2-25
2.3.3.B Horizontal Clearances . . . 2-25
2.3.3.C Vertical Clearances . . . 2-25
2.3.3.D End Slopes . . . 2-25
2.3.3.E Determination of Bridge Length . . . 2-26
2.3.3.F Scour and Stream Migration . . . 2-26
2.3.3.G Pier Protection . . . 2-26
2.3.3.H Construction Access and Time Restrictions . . . 2-26
2.3.3.I Buried structures that qualify as a bridge per National Bridge Inspection Standards (NBIS) shall be designed to meet above requirements for Water Crossings . . . 2-27
2.3.4 Bridge Widening . . . 2-27
2.3.4.A Bridge Width . . . 2-27
2.3.4.B Traffic Restrictions . . . 2-27
2.3.4.C Construction Sequence . . . 2-27
2.3.5 Temporary Bridges . . . 2-28
2.3.5.A Bridge Width . . . 2-28
2.3.5.B Live Load . . . 2-28
2.3.5.C Temporary Bridge Type . . . 2-28
2.3.5.D Temporary Bridge Traffic Barrier . . . 2-28
2.3.6 Retaining Walls and Noise Walls . . . 2-28
2.3.7 Bridge Deck Drainage . . . 2-28
2.3.8 Bridge Deck Protection Systems . . . 2-29
2.3.9 Construction Clearances . . . 2-29
2.3.10 Design Guides for Falsework Depth Requirements . . . 2-29
2.3.10.A Falsework Spans < 36′ and No Skews . . . 2-30
2.3.10.B Falsework Spans > 36′ or Spans with Skews or Limited Falsework Depth . . . 2-30
2.3.10.C Bridge Widening . . . 2-30
2.3.10.D Bridge with Skews . . . 2-30

2.3.11 Inspection and Maintenance Access . . . 2-31
2.3.11.A General . . . 2-31
2.3.11.B Safety Cables . . . 2-32
2.3.11.C Travelers . . . 2-32
2.3.11.D Abutment Slopes . . . 2-32
2.3.11.E Inspection Lighting and Access . . . 2-32
2.3.11.E.1 Reinforced Concrete Box and Post-Tensioned Concrete Box Girders . . . 2-32
2.3.11.E.2 Composite Steel Box Girders . . . 2-32
2.4 Selection of Structure Type . . . 2-33
2.4.1 Bridge Types . . . 2-33
2.4.1.A Reinforced Concrete Slab . . . 2-33
2.4.1.A.1 Application . . . 2-33
2.4.1.A.2 Characteristics . . . 2-33
2.4.1.A.3 Depth/Span Ratios . . . 2-33
2.4.1.B Reinforced Concrete Tee-Beam . . . 2-34
2.4.1.B.1 Application . . . 2-34
2.4.1.B.2 Characteristics . . . 2-34
2.4.1.B.3 Depth/Span Ratios . . . 2-34
2.4.1.C Reinforced Concrete Box Girder . . . 2-34
2.4.1.C.1 Application . . . 2-34
2.4.1.C.2 Characteristics . . . 2-34
2.4.1.C.3 Depth/Span Ratios* . . . 2-34
2.4.1.D Post-tensioned Concrete Box Girder . . . 2-35
2.4.1.D.1 Application . . . 2-35
2.4.1.D.2 Characteristics . . . 2-35
2.4.1.D.3 Depth/Span Ratios* . . . 2-35
2.4.1.E Prestressed Concrete Girder Sections . . . 2-35
2.4.1.E.1 Application . . . 2-35
2.4.1.E.2 Characteristics . . . 2-36
2.4.1.F Composite Steel Plate Girder . . . 2-37
2.4.1.G Composite Steel Box Girder . . . 2-37
2.4.1.G.1 Use . . . 2-37
2.4.1.G.2 Characteristics . . . 2-37
2.4.1.G.3 Depth/Span Ratios . . . 2-37
2.4.1.H Steel Truss (Through or Deck) . . . 2-38
2.4.1.H.1 Application . . . 2-38
2.4.1.H.2 Characteristics . . . 2-38
2.4.1.H.3 Depth/Span Ratios . . . 2-38
2.4.1.I Segmental Concrete Box Girder . . . 2-38
2.4.1.I.1 Application . . . 2-38
2.4.1.I.2 Characteristics . . . 2-38
2.4.1.I.3 Depth/Span Ratios . . . 2-38

2.4.1.J Railroad Bridges . . . 2-38
2.4.1.J.1 Use . . . 2-38
2.4.1.J.2 Characteristics . . . 2-38
2.4.1.J.3 Depth/Span Ratios . . . 2-39
2.4.1.K Timber . . . 2-39
2.4.1.K.1 Use . . . 2-39
2.4.1.K.2 Characteristics . . . 2-39
2.4.1.K.3 Depth/Span Ratios . . . 2-39
2.4.1.L Other . . . 2-39
2.4.2 Wall Types . . . 2-39
2.4.3 Buried Structure Types . . . 2-39
2.5 Aesthetic Considerations . . . 2-40
2.5.1 General Visual Impact . . . 2-40
2.5.2 End Piers . . . 2-40
2.5.2.A Wingwalls . . . 2-40
2.5.2.B Retaining Walls . . . 2-40
2.5.2.C Slope Protection . . . 2-41
2.5.2.D Noise Walls . . . 2-41
2.5.3 Intermediate Piers . . . 2-41
2.5.4 Barrier and Wall Surface Treatments . . . 2-41
2.5.4.A Plain Surface Finish . . . 2-41
2.5.4.B Formliner Finishes . . . 2-41
2.5.4.C Pigmented Sealer . . . 2-41
2.5.4.D Architectural Details . . . 2-42
2.5.5 Superstructure . . . 2-42
2.6 Miscellaneous . . . 2-43
2.6.1 Structure Costs . . . 2-43
2.6.2 Handling and Shipping Precast Members and Steel Beams . . . 2-43
2.7 WSDOT Standards for Highway Bridges . . . 2-45
2.7.1 Design Elements . . . 2-45
2.7.1.A General . . . 2-45
2.7.1.B Substructure . . . 2-45
2.7.1.C Superstructure . . . 2-46
2.7.1.D Examples . . . 2-46
2.7.2 Detailing the Preliminary Plan . . . 2-47

2.8 Bridge Security 2-48
2.8.1 General 2-48
2.8.2 Design 2-48
2.8.3 Design Criteria 2-49
2.9 Bridge Standard Drawings 2-51
2.10 Appendices 2-52
Appendix 2.2-A1 Bridge Site Data General 2-53
Appendix 2.2-A2 Structure Site Data Rehabilitation 2-54
Appendix 2.2-A3 Structure Site Data Stream Crossings 2-55
Appendix 2.2-A4 Preliminary Plan Checklist 2-56
Appendix 2.2-A5 Request For Geotechnical & Hydraulic Information for Bridge Preliminary Plan 2-58
2.99 References 2-59

Chapter 2 Preliminary Design

2.1 Preliminary Studies

Different levels of preliminary studies are discussed below. Not all are applicable to a specific project. Bridge and Structures Office should participate in all applicable studies. Reports from the studies should be filed for future reference.

2.1.1 Interdisciplinary Design Studies

Region may set up an Interdisciplinary Design Team (IDT) to review the various design alternatives for major projects. The IDT is composed of members from Regions, HQ, outside agencies, and consulting firms. The members have different areas of expertise, contribute ideas, and participate in the selection of design alternatives. This work will often culminate in the publication of an Environmental Impact Statement (EIS).

Bridge designers may be asked to participate either as a support resource or as a member of the IDT.

2.1.2 Value Engineering Studies

Value Engineering (VE) is a review process and analysis of a design project. The VE team seeks to define the most cost-effective means of satisfying the basic function(s) of the project. Usually a VE study takes place before or during the time that the region is working on the design. Occasionally, a VE study examines a project with a completed PS&E. VE studies are normally required for projects with cost overruns.

The VE team is headed by a facilitator and is composed of members with different areas of expertise from Regions, HQ, outside agencies, and consulting firms. The Team Facilitator will lead the team through the VE process. The team will review Region's project as defined by the project's design personnel. The VE team will determine the basic function(s) that are served by the project, brainstorm all possible alternatives to serve the same function(s), evaluate the alternatives for their effectiveness to meet the project's basic functions, determine costs, and prioritize and recommend alternatives. The VE team will prepare a report and present their findings to the region. The Region is then required to investigate and address the VE team's findings in the final design.

Bridge designers may be asked to participate either as a support resource or as a member of the VE team. VE studies usually take place over a three to five day period.

Engineers participating in VE studies, Cost-Risk Assessment (CRA) or Cost Estimate and Validation Process (CEVP) meetings shall call the S&E Engineers and double check all costs when providing cost estimates at VE studies and CRA meetings.

2.1.3 Preliminary Recommendations for Bridge Rehabilitation Projects

When the Region starts a bridge rehabilitation project, they will submit a written memo requesting that the Bridge and Structures Office make preliminary project recommendations.

The Bridge and Structures Office will review the as-built plans, load ratings, existing inspection and condition reports prepared by the Bridge Preservation Office (BPO), and schedule a site visit with Region and other stakeholders. Special inspection of certain portions of the structure may be included in the site visit or scheduled later with Region and BPO. The purpose of the inspections is to obtain more detailed information as to the bridge's condition, to obtain dimensions and take photographs of details needed for the project recommendations.

Following the site visit, the next steps are:

- Determine the load capacity of the existing bridge.
- Determine what type of rehabilitation work is needed and time frame required to accomplish the work.
- Determine any special construction staging requirements. Can the bridge be totally shut down for the rehabilitation period? How many lanes will need to be open? Can the work be accomplished during night closures or weekend closures?
- Develop various alternatives and cost estimates for comparison, ranging from "do nothing" to "new replacement".
- Determine what the remaining life expectancies are for the various rehabilitation alternatives.
- Determine the cost of a new replacement bridge. If the cost for the rehabilitation is equal or greater than 60 percent of a new replacement bridge, a new replacement bridge is recommended.

The Bridge and Structures Office will provide Region with a written report with background information. The Region will be given an opportunity to review the draft report and to provide input prior to finalization.

The Bridge Project Support Engineer and Specifications & Estimates Engineers (S&E) provide bridge scoping cost estimates to Regions for their use in determining budgets during Region's project definition phase. The S&E Engineers will check the Bridge Project Support Engineer's estimate as well as check each other.

2.1.4 Preliminary Recommendations for New Bridge Projects

The Region will seek assistance from the Bridge and Structures Office when they are preparing a design project requiring new bridges. Similar to the procedures outlined above for rehabilitation projects. The Region will submit a written memo requesting that the bridge office make preliminary project recommendations. The Bridge and Structures Office will provide scope of work, cost estimate(s), and a summary of the preferred alternatives with recommendations. Face to face meetings with the Region project staff are recommended prior to sending a written memo.

The Bridge Project Support Engineer and Specifications & Estimates Engineers provide bridge scoping cost estimates to Regions for their use in determining budgets during Region's project definition phase. The S&E Engineers will check the Bridge Project Support Engineer's estimate as well as check each other.

2.1.5 Type, Size, and Location (TS&L) Reports

The Federal Highway Administration (FHWA) requires that major or unusual bridges must have a Type, Size, and Location (TS&L) report prepared. The report will describe the project, proposed structure(s), cost estimates, other design alternatives considered, and recommendations. The report provides justification for the selection of the preferred alternative. A letter of approval by FHWA of the TS&L study is the basis for advancing the project to the design stage. The need for Type, Size, and Location (TS&L) report will be determined by the Bridge and Structures and WSDOT Project offices.

The FHWA should be contacted as early as possible in the Project Development stage because the FHWA requires a TS&L study for tunnels, movable bridges, unusual structures, and major structures. Smaller bridges that are unusual or bridge projects for Local Agencies may also require a TS&L study. Other projects, such as long viaducts, may not. Check with the Bridge Project Support Engineer to see if a TS&L report is necessary.

The preparation of the TS&L report is the responsibility of the Bridge and Structures Office. The TS&L cannot be submitted to FHWA until after the environmental documents have been submitted. However, TS&L preparation need not wait for environmental document approval, but may begin as soon as the bridge site data is available. See the *Design Manual* M 22-01 for the type of information required for a bridge site data submittal.

2.1.5.A TS&L General

The designer should first review the project history in order to become familiar with the project. The environmental and design reports should be reviewed. The bridge site data should be checked so that additional data, maps, or drawings can be requested. A meeting with Region and a site visit should be arranged after reviewing the history of the project.

The State Geotechnical Office must be contacted early in the TS&L process in order to have foundation information. Specific recommendations on the foundation type must be included in the TS&L report. The State Geotechnical Office will submit a detailed foundation report for inclusion as an appendix to the TS&L report.

To determine the preferred structural alternative, the designer should:

1. Develop a list of all feasible alternatives. At this stage, the range of alternatives should be kept wide open. Brainstorming with the Design Unit Managers and other engineers can provide new and innovative solutions.
2. Eliminate the least desirable alternatives by applying the constraints of the project. Question and document the assumptions of any restrictions and constraints. There should be no more than four alternatives at the end of this step.
3. Perform preliminary design calculations for unusual or unique structural problems to verify that the remaining alternatives are feasible.
4. Compare the advantages, disadvantages, and costs of the remaining alternatives to determine the preferred alternative(s).
5. Visit the project site with the Region, State Geotechnical Office, and HQ Hydraulics staff.

FHWA expects specific information on scour and backwater elevations for the permanent bridge piers, as well as, for any temporary falsework bents placed in the waterway opening.

After the piers have been located, a memo requesting a Hydraulics Report should be sent to the HQ Hydraulics Unit. The HQ Hydraulics Unit will submit a report for inclusion as an appendix to the TS&L report.

The State Bridge and Structures Architect should be consulted early in the TS&L study period. “Notes to the File” should be made documenting the aesthetic requirements and recommendations of the State Bridge and Structures Architect.

Cost backup data is needed for any costs used in the TS&L study. FHWA expects TS&L costs to be based on estimated quantities. This cost data is to be included in an appendix to the TS&L report. The quantities should be compatible with the S&E Engineer’s cost breakdown method. The Specifications & Estimates Engineers will check the designer's estimated costs included in TS&L reports. In the case of consultant prepared TS&L reports, the designer shall have the S&E Engineers check the construction costs.

2.1.5.B TS&L Outline

The TS&L report should describe the project, the proposed structure, and give reasons why the bridge type, size, and location were selected.

2.1.5.B.1 *Cover, Title Sheet, and Index*

These should identify the project, owner, location and the contents of the TS&L.

2.1.5.B.2 *Photographs*

There should be enough color photographs to provide the look and feel of the bridge site. The prints should be numbered and labeled and the location indicated on a diagram.

2.1.5.B.3 *Introduction*

The introduction describes the report, references, and other reports used to prepare the TS&L study. The following reports should be listed, if used.

- Design Reports and Supplements
- Environmental Reports
- Architectural Visual Assessment or Corridor Theme Reports
- Hydraulic Report
- Geotechnical Reports

2.1.5.B.4 *Project Description*

The TS&L report clearly defines the project. A vicinity map should be shown. Care should be taken to describe the project adequately but briefly. The project description summarizes the preferred alternative for the project design.

2.1.5.B.5 *Design Criteria*

The design criteria identify the LRFD-BDS and LRFD-SGS that will be used in the bridge design. Sometimes other design criteria or special loadings are used. These criteria should be listed in the TS&L. Some examples in this category might be the temperature loading used for segmental bridges or areas defined as wetlands.

2.1.5.B.6 *Structural Studies*

The structural studies section documents how the proposed structure Type, Size, and Location were determined. The following considerations should be addressed.

- Aesthetics
- Cost estimates
- Geometric constraints
- Project staging and stage construction requirements
- Foundations
- Hydraulics
- Feasibility of construction
- Structural constraints
- Maintenance

This section should describe how each of these factors leads to the preferred alternative. Show how each constraint eliminated or supported the preferred alternatives. Here are some examples. “Prestressed concrete girders could not be used because environmental restrictions required that no permanent piers could be placed in the river. This requires a 230-foot clear span.” “Restrictions on falsework placement forced the use of self supporting precast concrete or steel girders.”

2.1.5.B.7 *Executive Summary*

The executive summary should be able to “stand alone” as a separate document. The project and structure descriptions should be given. Show the recommended alternative(s) with costs and include a summary of considerations used to select preferred alternatives or to eliminate other alternatives.

2.1.5.B.8 *Drawings*

Preliminary plan drawings of the recommended alternative are included in an appendix. The drawings show the plan, elevation, and typical section. For projects where alternative designs are specified as recommended alternatives, preliminary plan drawings for each of the different structure types shall be included. Supplemental drawings showing special features, such as complex piers, are often included to clearly define the project.

2.1.5.C Reviews and Submittals

While writing the TS&L report, all major decisions should be discussed with the Design Unit Manager, who can decide if the State Bridge Design Engineer needs to be consulted. A peer review meeting with the State Bridge Design Engineer should be scheduled at the 50 percent completion stage. If applicable, the FHWA Bridge Engineer should be invited to provide input.

The final report must be reviewed, approved, and the Preliminary Plan drawings signed by the State Bridge and Structures Architect, the Bridge Project Support Engineer, the State Bridge Design Engineer, and the State Bridge and Structures Engineer. The TS&L report is submitted with a cover letter to FHWA signed by the State Bridge and Structures Engineer.

2.1.6 Alternate Bridge Designs

Bridge site conditions or current market conditions may justify the creation of alternate bridge designs. WSDOT has successfully used alternate bridge designs in the past to obtain best-value bridge design and construction solutions for specific locations. Alternate bridge designs may be considered when the following conditions can be satisfied:

- Construction cost estimates for the alternate designs should be comparable (within 10 percent). Cost estimates should include anticipated life-cycle costs (painting, maintenance, inspection). Periods of market uncertainty, with associated structure cost fluctuations, can provide further justification for alternate bridge designs.
- Region staff must approve the design expenditures for the preparation of alternate bridge designs, including preliminary plans, final bridge plans, specifications and construction cost estimates.
- WSDOT Bridge Office staffing levels and design schedules should allow for the preparation of alternate bridge designs.
- Variations in pier location may be required in order to optimize superstructure design for different alternates. Environmental constraints, geotechnical, hydraulic and scour conditions all need to allow for variations in pier location.
- Construction staging and traffic control must be determined for the alternates.
- Alternate bridge design concepts must be reviewed and approved by the Bridge and Structures Architect.

2.2 Preliminary Plan

The Preliminary Plan preparation stage is the most important phase of bridge and buried structure design because it is the basis for the final design. The Preliminary Plan should completely define the bridge and buried structure geometry so the final roadway design by the Regions and the structural design by the Bridge and Structures Office can take place with minimal revisions.

2.2.1 Development of the Preliminary Plan

2.2.1.A Process and Sequence of Development

2.2.1.A.1 *Schedule*

Development of the Preliminary Plan is the first milestone in the Structure design process. The Scope Of Work (SOW) agreement negotiated between the Region Design PEO and the Bridge and Structures Office at or shortly after the project kickoff establishes the deliverables (design submittals) to be produced and the due dates for the various deliverable review milestones for the specific project.

The Structural Submittal Expectations Matrix at www.wsdot.wa.gov/publications/fulltext/ProjectMgmt/DEM/Bridge.pdf outlines the expected content of the design submittal deliverables at specific stages of design development.

2.2.1.A.2 *Structure Site Data*

Structure Site Data is the background data and information developed by the Region Project Office and submitted to the Bridge and Structures Office for use in developing the Preliminary Plan. Development and content of Structure Site Data is defined by Chapter 710 of the WSDOT *Design Manual* M 22-01.

Upon receipt by the Bridge and Structures Office, the Bridge Preliminary Plan Engineer and the Bridge Preliminary Plan Detailer in the Bridge Project Support Unit review the contents against the Structure Site Data checklist, Exhibit 710-01 of *Design Manual* Chapter 710, to ensure completeness of the submittal. Conformance with WSDOT CAD detailing protocol, especially geometric consistency, is also confirmed at this time.

If inconsistencies or omissions are discovered, the Region Project Office is contacted to revise and supplement the Structure Site Data submittal as necessary.

When the Structure Site Data is confirmed as complete, the development of the Preliminary Plan begins.

2.2.1.A.3 *Preliminary Plan Design Assignment*

Development of the Preliminary Plan within the Bridge and Structures Office generally occurs in two different ways.

The primary approach as project schedules allow, is for the Preliminary Plan to be developed by designers and detailers within the Bridge Project Support Unit.

An alternative approach is for the Preliminary Plan to be developed by designers and detailers within one of the Bridge Office Structural Design Units under the review guidance of the Bridge Preliminary Plan Engineer and the Bridge Preliminary Plan Detailer in the Bridge Project Support Unit.

The flowchart for alternative approach for the Preliminary Plan preparation is shown in Appendix 1.2-A1: Bridge & Structures Design Office Workflow.

2.2.1.A.4 *Preliminary Plan Development*

Preliminary Plan development includes initial steps outlined in Sections 2.2.1.B through 2.2.1.G, further development under Section 2.2.3 and Section 2.2.4, and the review, submittal, and approval process outlined in Section 2.2.6.

The development steps of Sections 2.2.1.B through 2.2.1.G and Section 2.2.3 lead to selection of a preferred Structure Alternative for structure type, configuration, and orientation. Through this process, the CAD details of plan, elevation, cross sections, and other pertinent details are developed to sufficient completeness and consistency to bring the Preliminary Plan to the Initial Internal Review milestone.

2.2.1.A.5 *Initial Internal Review*

Once the Preliminary Plan is developed and detailed to the point of presenting a complete concept solution, including an initial set of Notes To The Region questions, the plan is ready for circulation for an initial internal review.

At this point, the preliminary plan designer circulates a PDF file of the Preliminary Plan to the following:

- Region Project Office, including Designer(s), Team Leader, and Project Engineer and any other actively involved Project Office management staff
- The State Foundation Engineer of the State Geotechnical Office, or the Geotechnical Engineer assigned to the project, if assigned at that time
- The State Hydraulics Engineer
- The State Bridge and Structures Architect - see Section 2.2.6.A
- The appropriate Bridge and Structures Office structure design specialist for the structure material type - Steel Specialist for steel bridges, Concrete Specialist for concrete bridges and buried structures - see Section 2.2.6.A.
- The Bridge Project Support Unit Manager
- The Structure Design Unit Manager assigned to design the structure
- The designer in the Structure Design Unit assigned to lead the design (if assigned at that time)
- The State Bridge Design Engineer
- The Coast Guard Liaison Engineer when the bridge requires a US Coast Guard permit for navigation opening and clearance.
- The checker assigned to review the project - either another designer in the Bridge Project Support Unit or, in the case of a Preliminary Plan prepared in a Bridge Office Structural Design Unit, the Bridge Preliminary Plan Engineer in the Bridge Project Support Unit

The deadline for return of review comments is specified in the distribution email. The review period is conventionally two-weeks, but this may be adjusted as appropriate to account for holidays, project schedule status, and complexity of the project. Comments are reviewed and addressed as they are received. If comments received are significant enough to trigger changes in structure type, configuration, and orientation, there may be additional internal reviews at the discretion of the Bridge Preliminary Plan Engineer.

2.2.1.A.6 *Request for Geotechnical and Hydraulics Information*

Coincident with the initial internal review distribution, the Request for Geotechnical & Hydraulics Information for Bridge Preliminary Plan form (Appendix 2.2.A-5) is completed and distributed to the (1) the State Foundation Engineer or the Geotechnical Engineer assigned to the project, and, for waterway crossings (2) the State Hydraulics Engineer.

The Preliminary Plan designer completes the project name and location, and the survey line stations defining the structure limits. The geotechnical and hydraulic contacts are responsible to complete the tabular data in the form. The return of a completed form shall coincide with the end of the initial internal review.

The hydraulics information generated by this request pertains to how hydrology affects geotechnical aspects of the foundation design (scour and channel migration). This information is supplemental to the stream flow data provided with the Structure Site Data.

2.2.1.A.7 *Cost Estimate*

Once consensus is reached on the structure type, configuration, and orientation through the internal review process, and the Request for Geotechnical & Hydraulics Information form is completed and returned, the Preliminary Plan with the completed geotechnical and hydraulics Information form is presented to the Bridge Project Support Engineer, or designee, for preparation of the preliminary cost estimate. See Section 2.2.5.

2.2.1.A.8 *Distribution for Preliminary Plan Approval*

With the completion of the cost estimate, the Preliminary Plan is ready for distribution to the Region for approval. See Section 2.2.6.B and Section 2.2.6.C.

2.2.1.A.9 *Distribution of Final Preliminary Plan*

When consensus is reached with Region signature approval on the Preliminary Plan as distributed in accordance with Section 2.2.6.B and Section 2.2.6.C, the Preliminary Plan is ready for final distribution, to officially conclude the Preliminary Plan process and fully transfer design responsibility for the project to the Bridge Structural Design Unit. The distribution list for the Final Preliminary Plan remains the same as specified in Section 2.2.6.B.

2.2.1.B Responsibilities

In general, the responsibilities of the designer, checker, detailer, and Design Unit Manager are described in Section 1.2.2. The Preliminary Plan designer as defined in Section 2.2.1.A.3 is responsible for developing a Preliminary Plan for the bridge or buried structure. The Preliminary Plan must be compatible with the geometric, aesthetic, staging, geotechnical, hydraulic, and structural requirements and conditions at the bridge site as presented by the Structure Site Data.

The Structural Design Unit Manager shall be kept informed of progress on the Preliminary Plan so that the schedule can be monitored. If problems develop, the Structural Design Unit Manager can request adjustments to the schedule or allocate additional manpower to meet the schedule.

The Preliminary Plan designer keeps the job file up-to-date by documenting all conversations, meetings, requests, questions, and approvals concerning the project. Notes-to-the-designer, and details not shown in the preliminary plan shall be documented in the job file.

The checker, as defined in Section 2-2.1.A.5, shall provide an independent review of the plan, verifying that it is in compliance with the Structure Site Data as provided by the Region and as corrected in the job file. The plan shall be compared against the Preliminary Plan checklist (see Appendix 2.2-A4) to ensure that all necessary information is shown. The checker reviews the plan for consistency with office design practice, detailing practice, and for constructability.

The Preliminary Plan shall be detailed using current office CAD equipment and software.

2.2.1.C Site Reconnaissance

The Structure Site Data submitted by the Region will include photographs, and in some cases a video, of the site. Even for minor projects, this may not be enough information for the designer to work from to develop a Preliminary Plan. For most bridge projects, site visits are necessary.

Site visits with Region project staff and other project stakeholders, such as, State Geotechnical Office, HQ Hydraulics Office, and Region Design PEO should be arranged through the Bridge Project Support Unit Manager.

2.2.1.D Coordination

The designer is responsible for coordinating the design and review process throughout the project. This includes seeking input from various WSDOT Offices and outside agencies. The designer should consult with State Geotechnical Office, HQ Hydraulics Office, Bridge Preservation Office, and Region design and maintenance, and other resources for their input..

One aspect of coordination with the Region Design PEO is review of the *Not Included In Bridge Quantities List* (NIBQ), DOT Form 230-038 - see Appendix 12.1-A1. The NIBQ itemizes elements shown in the Preliminary Plan that are not related to the structural design, but rather are of civil design context and as such are the design responsibility of the Region. Creation of the NIBQ helps to ensure that responsibility for all elements identified in the Preliminary Plan is clearly assigned and understood.

2.2.1.E Consideration of Alternatives

In the process of developing the Preliminary Plan, the designer brainstorms, develops, and evaluates various design alternatives. See Section 2.2.3 General Factors for Consideration and how they apply to a particular site. See also Section 2.1.5A. Preliminary design calculations shall be done to verify feasibility of girder span and spacing, falsework span capacity, geometry issues, and construction clearances. Generally, the number of alternatives is usually limited to only an obvious few for most projects. For some smaller projects and most major projects, design alternatives merit development and close evaluation.

2.2.1.F Designer Recommendation

After a thorough analysis of the needs and limitations of the site, studying all information, and developing and evaluating the design alternatives for the project, the designer selects the preferred alternative, and places justification of the selection in the job file. At this stage, the designer should discuss the recommendation with the Bridge Project Support Unit Manager.

2.2.1.G Concept Approval

For some projects, the presentation, in "F" above, to the Bridge Project Support Unit Manager satisfies the need for concept approval. Large complex projects, projects of unique design, or projects where two or more alternatives appear viable, should be presented to the Bridge Project Support Unit Manager, the Structure Design Unit Manager assigned to design the project and the designer, if assigned at that time, and State Bridge Design Engineer for concurrence before Preliminary Plan development is completed.

2.2.1.H Consideration for Accelerated Bridge Construction

In the process of developing the Preliminary Plan, the designer develops, and evaluates to possibility of accelerated bridge construction (ABC). Preliminary design calculations shall be done to verify feasibility of ABC for some projects with consultation with the Region Development Engineer and Project office.

2.2.2 Documentation

2.2.2.A Job File

An official job file is created by the Bridge Preliminary Plan Detailer in the Bridge Project Support Unit when a Structure Site Data submittal is received by the Bridge and Structures Office from the Region Project Office. This job file serves as a depository for all communications and resource information for the job. Scheduling and time estimates are kept in this file, as well as cost estimates, preliminary quantities, and documentation of all approvals. Records of important telephone conversations and copies of e-mails approving decisions are also kept in the job file.

After completing the Preliminary Plan, the job file continues to serve as a depository for useful communications and documentation for all pertinent project related information and decisions during the design process through and including preparation of the Final Bridge PS&E.

2.2.2.B Structure Site Data

All Preliminary Plans are developed from Structure Site Data submitted by the Region Project Office. This submittal consists of a document describing the project with a bullet list itemization of the Structure Site Data components, forms, files, and data that are also attached to or linked by the email transmittal. See WSDOT *Design Manual* M 22-01 Chapter 710 and Exhibit 710-01. See also Section 2.2.1.A.2 and Appendices 2.2-A1, 2.2-A2, and 2.2-A3.

2.2.2.C Design Report or Design Summary and Value Engineering Studies

Some bridge and buried structure projects have a Design File Report or Design Summary prepared by the Region. This is a document, which includes design considerations and conclusions reached in the development of the project. It defines the scope of work for the project. It serves to document the design standards and applicable deviations for the roadway alignment and geometry. It is also an excellent reference for project history, safety and traffic data, environmental concerns, and other information. If a VE study was done on the project, the report will identify alternatives that have been studied and why the recommended alternative was chosen.

2.2.2.D Other Resources

For some projects, preliminary studies or reports will have been prepared. These resources can provide additional background for the development of the Preliminary Plan.

2.2.2.E Notes

Notes of meetings with Regions and other project stakeholders shall be included in the job file.

2.2.3 General Factors for Consideration

Many factors must be considered in preliminary bridge design. Some of the more common of these are listed in general categories below. These factors are discussed in appropriate detail in subsequent portions of this manual.

2.2.3.A Site Requirements

Topography
Alignment (tangent, curved, skewed)
Vertical profile and superelevation
Highway Class and design speed
Proposed or existing utilities

2.2.3.B Safety

Feasibility of falsework (impaired clearance and sight distance, depth requirements, see Section 2.3.10)
Density and speed of traffic
Detours or possible elimination of detours by construction staging
Sight distance
Horizontal clearance to piers
Hazards to pedestrians, bicyclists

2.2.3.C Economic

Funding classification (federal and state funds, state funds only, local developer funds)
Funding level
Bridge preliminary cost estimate

2.2.3.D Structural

Limitation on structure depth
Requirements for future widening
Foundation and groundwater conditions
Anticipated settlement
Stage construction
Falsework limitations

2.2.3.E Environmental

Site conditions (wetlands, sensitive areas, and cultural resources)
Environmental requirements
Mitigating measures
Construction access

2.2.3.F Aesthetic

General appearance
Compatibility with surroundings and adjacent structures
Visual exposure and experience for public

2.2.3.G Construction

Ease of construction
Falsework clearances and requirements
Erection problems
Hauling difficulties and access to site
Construction season
Time limit for construction
Use of ABC methods

2.2.3.H Hydraulic

Bridge deck drainage
Stream flow conditions and drift
Passage of flood debris
Scour, effect of pier as an obstruction (shape, width, skew, number of columns)
Bank and pier protection
Consideration of a culvert as an alternate solution
Permit requirements for navigation and stream work limitations

2.2.3.I Maintenance

Concrete vs. Steel
Expansion joints
Bearings
Deck protective systems
Inspection and Maintenance Access (UBIT clearances) (see Figure 2.3.11-1)

2.2.3.J Bridge Security

Mitigation measures for the inappropriate and illegal access to the bridge Employing the methods of Crime Prevention Through Environmental Design (CPTED)

2.2.3.K Alternatives

Process of developing alternative designs as described I Section 2.2.1-E.

2.2.3.L Other

Prior commitments made to other agency officials and individuals of the community Recommendations resulting from preliminary studies

2.2.4 Permits

2.2.4.A Coast Guard Waterway Jurisdiction and Navigation Permits for New Construction

For all waterway crossings, the US Coast Guard shall be contacted for determination and confirmation of waterway jurisdiction and any associated permit requirements or categorical assignment. When the Structural Clear Span parallel to the roadway centerline is less than or equal to 30 feet, this action is the responsibility of the Region, whether by the Region Design Project Office or the associated Region Environmental Services Office (ESO).

When the Structural Clear Span parallel to the roadway centerline is greater than 30 feet, this action is the responsibility of either the Region ESO, ideally as part of the project scoping phase, or the Bridge and Structures Office as part of the preliminary plan process.

Based on the response provided by the US Coast Guard, whether through the Region or through the Coast Guard Liaison Engineer, the preliminary plan identifies the waterway jurisdiction status in the left margin of the plan. The USCG block specifies whether the USCG has jurisdiction or not, along with the date that the USCG made the determination, and indicates whether a USCG navigation permit is required.

When the response received from the US Coast Guard indicates that a navigation permit is required, the Bridge and Structures Office is responsible for coordinating and applying for this permit, in accordance with *Design Manual* M 22.01 Section 710.03. The Coast Guard Liaison Engineer in the Bridge Project Support Unit of the Bridge and Structures Office is responsible for this.

See the *Design Manual* M 22-01, chapter covering Environmental Permits and Approvals, or the *Environmental Manual* Chapter 500 for general permitting information.

Section 9 Coast Guard Permit – Information and Permitting procedures can be found at www.dco.uscg.mil/Our-Organization/Assistant-Commandant-for-Prevention-Policy-CG-5P/Marine-Transportation-Systems-CG-5PW/Office-of-Bridge-Programs/Bridge-Permit-Application-Process.

The work on developing the permit application should be started early in the preliminary plan process so that it is ready to be sent to the US Coast Guard at least eight months prior to the project ad date. The Coast Guard Liaison Engineer should be included in all distributions of the Preliminary Plan as outlined in Sections 2.2.1.A.5, 2.2.1.A.8, and 2.2.1.A.9. The Coast Guard Liaison Engineer uses these Preliminary Plans to develop the Coast Guard Application plan sheets, which become part of the permit.

2.2.4.B Coast Guard Temporary Regulation Adjustments for Construction Operations at Existing Structures

Existing bridges crossing navigable waters occasionally require construction or maintenance activities that impact navigation channels governed by USCG permits. For fixed span bridges, this may include construction or maintenance activities that infringe upon the horizontal and vertical navigation opening defined in the USCG permit. For movable bridges, in addition to the above, this may also include adjustments to existing bridge opening operating regulations.

Such temporary adjustments require coordination with the US Coast Guard, and the primary responsibility for this contact and coordination lies with the Region Design Project Office. The scope of such coordination varies depending on the extent of the infringement into the defined horizontal or vertical navigation clearance opening, the extent of the change to the bridge operation regulation, and the duration of the construction or maintenance activity.

This coordination activity may require the Design Project Office to conduct a survey of waterway users or to perform other background information tasks requested by the US Coast Guard. Projects with more extensive impacts may lie outside the approval authority of the local USCG Commander and may require review and action by US Coast Guard HQ in Washington, DC. In all cases, the earlier in the design process that the Region Design Project Office initiates these coordination efforts, the more likely the USCG can complete their regulatory process without impacting the project schedule.

2.2.4.C Other

All other permits will be the responsibility of the Region (see the *Design Manual* M 22-01). The Bridge and Structures Office may be asked to provide information to the Region to assist them in making applications for these permits.

2.2.5 Preliminary Cost Estimate

A preliminary cost estimate is developed when the bridge type, foundation type, deck area and adjacent retaining walls are confirmed. At the Preliminary Plan stage the cost estimate is based on square-foot costs taken from the Chapter 12 and adjusted for structure specifics. Consult with the Bridge Project Support Engineer or designee.

The preliminary cost estimate is based on recent bidding history on similar structures, degree of difficulty of construction, inflation trends, and length of time until Ad Date, and time for completion of construction. It is considered accurate to within 15 percent, but should be accurate enough to preclude a surprise increase at the time of the Engineer's estimate, which is based on completed design quantities. The preliminary cost estimate shall be updated frequently as changes are made to the Preliminary Plan or new data influences the costs.

As the Preliminary Plan is developed through the Initial Internal Review stage of Section 2.2.1.A.5, but before sending to the Bridge Design Engineer for signature, the Preliminary Plan and completed Request For Geotechnical & Hydraulics Information form is submitted to the Bridge Project Support Engineer or designee. The information presented shall include the complete Preliminary Plan and all backup data previously prepared on costs for the structures (such as preliminary quantity calculations, preliminary foundation type selection, etc,). The Bridge Project Support Engineer or designee reviews the Preliminary

Plan, prepares, signs, and dates a cost estimate summary sheet, and returns the package to the designer.

When the Preliminary Plan is presented to the State Bridge Design Engineer for signature (see Section 2.2.6.B), the submittal shall include the summary sheet prepared by the Bridge Project Support Engineer or designee. The summary sheet and backup data is then placed in the job file. Do not send the summary sheet to the Region.

After submittal of the Preliminary Plan to the Region, the Region shall be notified immediately of any increases in the preliminary cost estimate during the structural design.

2.2.6 Approvals

2.2.6.A State Bridge and Structures Architect/Specialists

For all preliminary plans, the State Bridge and Structures Architect and appropriate specialists should be aware and involved when the designer is first developing the plan. The State Bridge and Structures Architect and specialists should be given a print of the plan by the Preliminary Plan designer. This is concurrent with the checking of the Preliminary Plan. The State Bridge and Structures Architect and specialist reviews, approves, signs and dates the print. This signed print is placed in the job file. If there are any revisions, which affect the aesthetics of the approved preliminary plan, the State Bridge and Structures Architect should be asked to review and approve, by signature, a print showing the revisions, which change elements of aesthetic significance.

For large, multiple bridge projects, the State Bridge and Structures Architect should be contacted for development of a coordinated architectural concept for the project corridor.

The architectural concept for a project corridor is generally developed in draft form and reviewed with the project stakeholders prior to finalizing. When finalized, it should be signed by the Region Administrator or designee.

Approval from the State Bridge and Structures Architect is required on all retaining walls and noise wall aesthetics including finishes and materials, and configuration.

In order to achieve superstructure type optimization and detailing consistency, the following guidelines shall be used for the preparation of all Preliminary Plans:

- Preliminary Plans for all steel bridges and structures shall be reviewed by the Steel Specialist.
- Preliminary Plans for all concrete bridges and structures shall be reviewed by the Concrete Specialist.
- Detailing of all Preliminary Plans shall be reviewed by the Preliminary Plans Detailing Specialist.

These individuals shall signify their approval by signing the Preliminary Plan in the Architect/Specialist block on the first plan sheet, together with the State Bridge and Structures Architect.

2.2.6.B Bridge and Buried Structures Design

The Bridge Project Support Unit Manager signs the Preliminary Plan after it has been checked and approved by the Architect/Specialists. At this point, it is ready for review, approval, and signing by the State Bridge Design Engineer.

After the State Bridge Design Engineer has signed the Preliminary Plan, it is returned to the designer. The designer places the original signed Preliminary Plan in the job file and enters the names of the signers in the signature block. A PDF File of this Preliminary Plan and a cover memorandum signed by the State Bridge Design Engineer or designee is then sent to Region through the Region Project Office by email for review and approval by the Approving Authority in the Region.

The email includes the cover memorandum, the preliminary plan and the WSDOT Form 230-038 *Not Included in Bridge Quantities List* (NIBQ) and a brief explanation of the preliminary cost estimate. The cover memorandum is addressed to the Region Project Development Engineer/Engineering Manager or equivalent as the assigned Approving Authority.

The following individuals should be included in the email distribution list with attachments:

1. FHWA Washington Division Bridge Engineer
2. Region Project Engineer, Design Team Leader and Designer, and the Region Project Development Engineer/Engineering Manager or equivalent.
3. Bridge Project Support Unit Manager
4. Bridge Design Unit Manager assigned to design the structure,
5. Bridge Preliminary Plan Detailer in the Bridge Project Support Unit
6. State Foundation Engineer,
7. HQ Hydraulics Engineer (when it is a water crossing),
8. Bridge Asset Management Engineer (when it is a replacement),
9. Bridge Preservation Engineer,
10. HQ Design Office Railroad Liaison (when a railroad is involved), and Region Traffic Engineer (when ITS is required).
11. The Bridge Scheduling Engineer
12. Region and HQ Program Management Engineers.

2.2.6.C Region

The Region Project Office reviews the Preliminary Plan for compliance and agreement with the Structure Site Data. The Region Project Office answers any *"Notes to the Region"* that have been listed on the plan. When this review is complete, the Regional Project Development Engineer/Engineering Manager or equivalent position, or designee, signs the plan. The Region sends back a print of the signed plan with any comments noted in red (additions) and green (deletions) along with responses to the questions raised in the "Notes to the Region."

2.2.6.D Railroad

When a railroad is involved with a structure on a Preliminary Plan, the HQ Design Office Railroad Liaison must be involved during the plan preparation process. A copy of the Preliminary Plan is sent to the HQ Design Office Railroad Liaison, who then sends a copy to the railroad involved for their review and comments.

The railroad will respond with comments to the HQ Design Office Railroad Liaison. The comment form or email is then routed to the Project Office for coordination with the Bridge and Structures Office for a response to the railroad. The review process continues with the railroad until 100% plans have been accepted by the railroad as "No Exceptions Taken". Railroads do not approve WSDOT bridge plans, but the notation allows the project to continue with an agreement and right of entry onto railroad property for construction. Please consult the *Union Pacific Railroad-BNSF Railway Guidelines for Railroad Grade Separation Projects* for additional requirements.

For design plans prepared within the Bridge and Structures Office, the Design Unit Manager or lead designer will be responsible for coordinating and providing shoring plans for structures adjacent to railroads. Shoring plans on railroad property or adjacent to track must conform to the railroads Guidelines for Temporary Shoring (UPRR and BNSF). It is recommended that the Construction Support Unit design, prepare, stamp, and sign shoring plans. However, the design unit may elect to design, prepare, stamp, and sign shoring plans.

For consultant prepared design plans, the Design Unit Manager or lead reviewer will be responsible for coordinating and having the consultant design shoring plans for structures adjacent to railroads. The Construction Support Unit has design criteria and sample plan details which can be used by the design units and consultants.

A Construction Support engineer is available to attend design project kick-off meetings if there is a need for railroad shoring plans or other constructability issues associated with the project. Regardless of who prepares the bridge plans, all shoring plans should be reviewed by the Construction Support Unit before they are submitted for railroad review and approval at the Constructability Review stage.

At the Constructability Review stage or sooner if possible, especially for seismic retrofit project, the S&E Engineer will send copies of the layout, foundation plan, temporary shoring plans, and appropriate special provision section for structures adjacent to railroads to the HQ Design Office Railroad Liaison, who will submit this package to the appropriate railroad for review. The shoring plans shall show the pressure loading diagram and calculations to expedite the railroad's review.

2.3 Preliminary Plan Criteria

2.3.1 Highway Crossings

2.3.1.A General

A highway crossing is defined as a grade separation between two intersecting roadways. Naming convention varies slightly between mainline highway crossings and ramp highway crossings, but essentially, all bridges carry one highway, road, or street over the intersecting highway, road, or street.

2.3.1.A.1 *Mainline Highway Crossings*

Names for mainline highway crossings are defined by the route designation or name of state highway, county road, or city street being carried over another highway, road, or street.

For example, a bridge included as part of an interchange involving I-205 and SR 14 and providing for passage of traffic on I-205 under SR 14 would be named SR 14 Over I-205 (followed by the bridge number).

2.3.1.A.2 *Ramp Highway Crossings*

Names for ramp highway crossings are defined by the state highway route numbers being connected, the directions of travel being connected, and the designation or name of the highway, road, or street being bridged.

For example, a bridge in the Hewitt Avenue Interchange connecting traffic from westbound US 2 to northbound I-5 and passing over Everett Street would be named 2W-5N Ramp Over Everett Street (followed by the bridge number). A bridge connecting traffic from northbound I-5 to westbound SR 518 and passing over northbound I-405 and a ramp connecting southbound I-405 to northbound I-5 would be named 5N-518W Over 405N, 405S-5N (followed by the bridge number).

2.3.1.B Bridge Width

The bridge roadway channelization (configuration of lanes and shoulders) is provided by the region with the Bridge Site Data. For state highways, the roadway geometrics are controlled by the *Design Manual* M 22-01. For city and county arterials, the roadway geometrics are controlled by Chapter 42 of the *Local Agency Guidelines* M 36-63.

2.3.1.C Horizontal Clearances

Safety dictates that fixed objects be placed as far from the edge of the roadway as is economically feasible. Criteria for minimum horizontal clearances to bridge piers and retaining walls are outlined in the *Design Manual* M 22-01. The *Design Manual* M 22-01 outlines clear zone and recovery area requirements for horizontal clearances without guardrail or barrier being required.

Actual horizontal clearances shall be shown in the plan view of the Preliminary Plan (to the nearest 0.1 foot). Minimum horizontal clearances to inclined columns or wall surfaces should be provided at the roadway surface and for a vertical distance of 6′ above the edge of pavement. When bridge end slopes fall within the recovery area, the minimum horizontal clearance should be provided for a vertical distance of 6′ above the fill surface. See Figure 2.3.1-1.

Bridge piers and abutments ideally should be placed such that the minimum clearances can be satisfied. However, if for structural or economic reasons, the best span arrangement requires a pier to be within clear zone or recovery area, and then guardrail or barrier can be used to mitigate the hazard.

There are instances where it may not be possible to provide the minimum horizontal clearance even with guardrail or barrier. An example would be placement of a bridge pier in a narrow median. The required column size may be such that it would infringe on the shoulder of the roadway. In such cases, the barrier safety shape would be incorporated into the shape of the column. Barrier or guardrail would need to taper into the pier at a flare rate satisfying the criteria in the *Design Manual* M 22-01. See Figure 2.3.1-2. The reduced clearance to the pier would need to be approved by the Region. Horizontal clearances, reduced temporarily for construction, are covered in Section 2.3.9.

Figure 2.3.1-1 Horizontal Clearance to Incline Piers

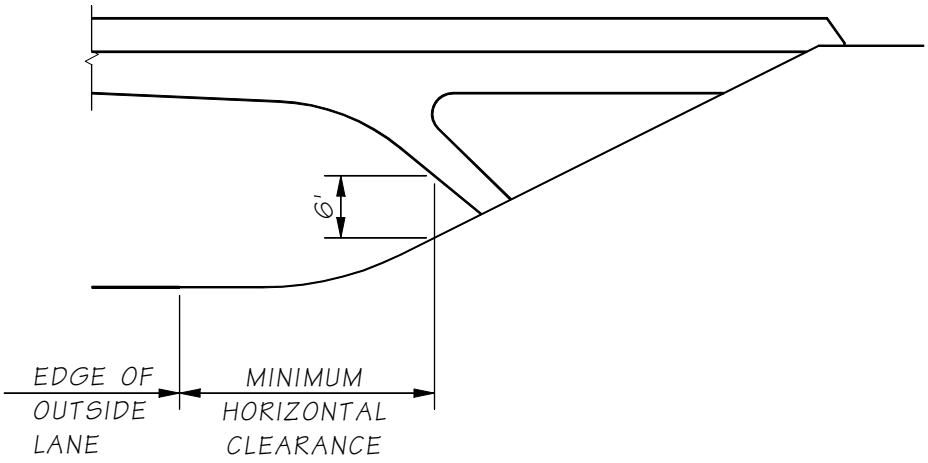

Figure 2.3.1-2 Bridge Pier in Narrow Median

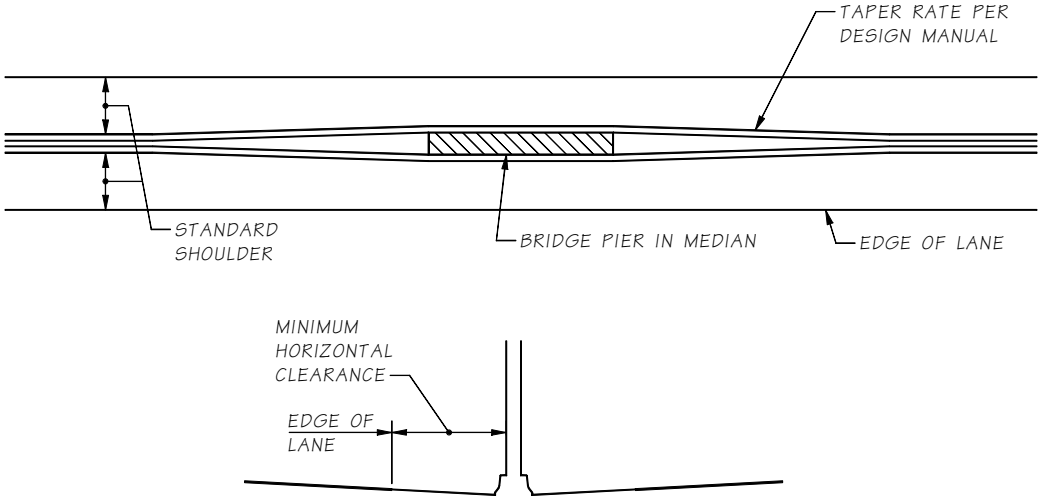

2.3.1.D Vertical Clearances

The required minimum vertical clearances are established by the functional classification of the highway and the construction classification of the project. For state highways, this is as outlined in the *Design Manual* M 22-01. For city and county arterials, this is as outlined in Chapter IV of the *Local Agency Guidelines* M 36-63.

Actual minimum vertical clearances are shown on the Preliminary Plan (to the nearest 0.1 foot). The approximate location of the minimum vertical clearance is noted in the upper left margin of the plan. For structures crossing divided highways, minimum vertical clearances for both directions are noted.

2.3.1.E End Slopes

The type and rate of end slope used at bridge sites is dependent on several factors. Soil conditions and stability, right of way availability, fill height or depth of cut, roadway alignment and functional classification, and existing site conditions are important.

The region should have made a preliminary determination based on these factors during the preparation of the bridge site data. The side slopes noted on the Roadway Section for the roadway should indicate the type and rate of end slope.

The State Geotechnical Office will recommend the minimum rate of end slope. This should be compared to the rate recommended in the Roadway Section and to existing site conditions (if applicable). The types of end slopes and bridge slope protection are discussed in the *Design Manual* M 22-01. Examples of slope protection are shown in *Standard Plans* M 21-01 Section A.

2.3.1.F Determination of Bridge Length

Establishing the location of the end piers for a highway crossing is a function of the profile grade of the overcrossing roadway, the superstructure depth, the minimum vertical and horizontal clearances required for the structure, the profile grade and channelization (including future widening) of the undercrossing roadway, and the type and rate of end slope used.

For the general case of bridges in cut or fill slopes, the control point is where the cut or fill slope plane meets the bottom of roadside ditch or edge of shoulder as applicable. From this point, the fill or cut slope plane is established at the recommended rate up to where the slope plane intersects the grade of the roadway at the shoulder. Following the requirements of *Standard Plans* M 21-01 Section A, the back of pavement seat, end of wing wall or end of retaining wall can be established at 3′ behind the slope intersection. See Figure 2.3.1-3.

Figure 2.3.1-3 Determination of Bridge Length

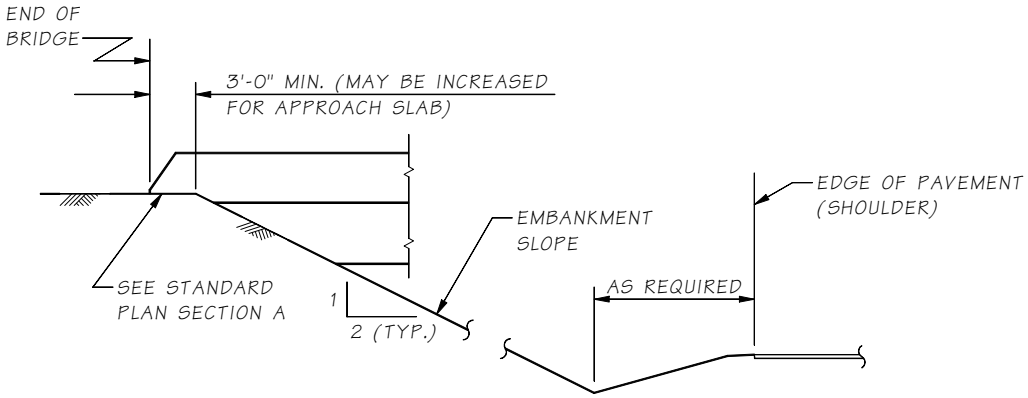

For the general case of bridges on wall type abutments or "closed" abutments, the controlling factors are the required horizontal clearance and the size of the abutment. This situation would most likely occur in an urban setting or where right of way or span length is limited.

2.3.1.G Pedestrian Crossings

Pedestrian crossings follow the same format as highway crossings. Geometric criteria for bicycle and pedestrian facilities are established in the *Design Manual* M 22-01. Width and clearances would be as established there and as confirmed by region. Minimum vertical clearance over a roadway is given in the *Design Manual* M 22-01. Unique items to be addressed with pedestrian facilities include ADA requirements, the railing to be used, handrail requirements, overhead enclosure requirements, and profile grade requirements for ramps and stairs.

2.3.1.H Bridge Redundancy

Design bridges to minimize the risk of catastrophic collapse by using redundant supporting elements (columns and girders).

For substructure design use the following in accordance with LRFD-BDS Section 1.3.4.

- One column minimum for roadways 40′ wide and under.
- Two columns minimum for roadways over 40′ to 60′.
- Three columns minimum for roadways over 60′.

Collision protection or design for collision loads for piers with one or two columns shall be provided.

For superstructure design use:

- Three girders (webs) minimum for roadways 32′ and under.
- Four girders (webs) minimum for roadways over 32′.

See Appendix 2.3-A2-1 for details.

Note: Any deviation from the above guidelines shall have a written approval by the Bridge Design Engineer.

2.3.2 Railroad Crossings

2.3.2.A General

A railroad crossing is defined as a grade separation between an intersecting highway and a railroad. Names for railroad crossings are defined either as railroad over state highway or state highway over railroad. For example, a bridge carrying BNSF railroad tracks over I-5 would be named BNSF Over I-5 (followed by the bridge number) A bridge carrying I-90 over Union Pacific railroad tracks would be named I-90 Over UPRR (followed by the bridge number).

Requirements for highway/railway grade separations will involve negotiations with the railroad company concerning clearances, geometrics, utilities, and maintenance roads. The railroad's review and acceptance as "No Exceptions Taken" will be based on the completed 100% plans. Please consult the *Union Pacific Railroad-BNSF Railway Guidelines for Railroad Grade Separation Projects* for additional requirements.

2.3.2.B Criteria

The initial Preliminary Plan shall be prepared in accordance with the criteria of this section to apply uniformly to all railroads. Variance from these criteria will be negotiated with the railroad, when necessary, after a Preliminary Plan has been provided for their review.

2.3.2.C Bridge Width

For highway over railway grade separations the provisions of Section 2.3.1 pertaining to bridge width of highway crossings shall apply. Details for railway over highway grade separations will depend on the specific project and the railroad involved. *Please consult the Union Pacific Railroad-BNSF Railway Guidelines for Railroad Grade Separation Projects* for additional requirements.

2.3.2.D Horizontal Clearances

For railway over highway grade separations, undercrossings, the provisions of Section 2.3.1 pertaining to horizontal clearances for highway crossings shall apply. However, because of the heavy live loading of railroad spans, it is advantageous to reduce the span lengths as much as possible. For railroad undercrossings skewed to the roadway, piers may be placed up to the outside edge of standard shoulders (or 8′ minimum) if certain conditions are met (known future roadway width requirements, structural requirements, satisfactory aesthetics, satisfactory sight distance, barrier protection requirements, etc.).

For railroad overcrossings, it is preferable to clear span the railroad right of way, with minimum horizontal clearances described in the *Union Pacific Railroad-BNSF Railway Guidelines for Railroad Grade Separation Projects*.

The actual minimum horizontal clearances shall be shown in the Plan view of the Preliminary Plan (to the nearest 0.1 foot).

2.3.2.E Crash Walls

Crash walls, when required, shall be designed to conform to the criteria of the *AREMA Manual*. To determine when crash walls are required, consult the following:

- The *Union Pacific Railroad-BNSF Railway Guidelines for Railroad Grade Separation Projects*
- The *AREMA Manual*
- The HQ Design Office Railroad Liaison

2.3.2.F Vertical Clearances

For railway over highway grade separations, the provisions of Section 2.3.1 pertaining to vertical clearances of highway crossings shall apply. For highway over railway grade separations, the minimum vertical clearance shall satisfy the requirements of the *Design Manual* M 22-01.

The actual minimum vertical clearances shall be shown on the Preliminary Plan (to the nearest 0.1 foot). The approximate location of the minimum vertical clearance is noted in the upper left margin of the plan.

2.3.2.G Determination of Bridge Length

For railway over highway grade separations, the provisions of Section 2.3.1 pertaining to the determination of bridge length shall apply. For highway over railway grade separations, the minimum bridge length shall satisfy the minimum horizontal clearance requirements. The minimum bridge length shall generally satisfy the requirements of Figure 2.3.2-1.

Figure 2.3.2-1 Determination of Bridge Length For a Highway Over Railway Grade Separation

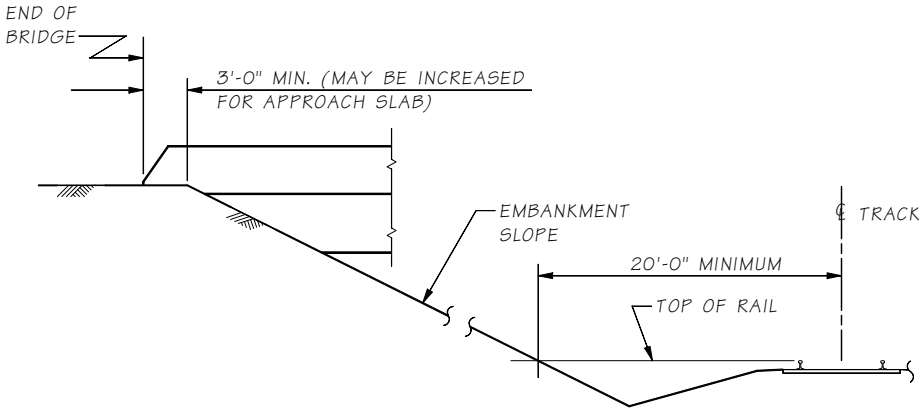

2.3.2.H Special Considerations

For highway over railway grade separations, the top of footings for bridge piers or retaining walls adjacent to railroad tracks shall be 2′ or more below the elevation of the top of tie and shall not have less than 2′ of cover from the finished ground. The footing face shall not be closer than 10′ to the center of the track. Any cofferdams, footings, excavation, etc., encroaching within 10′ of the center of the track requires the approval of the railroad.

2.3.2.I Construction Openings

For railroad clearances, see *Design Manual* M 22-01. The minimum horizontal construction opening is 15′ to either side of the centerline of track. The minimum vertical construction opening is 21′-6″ above the top of rail. Falsework openings shall be checked to verify that enough space is available for falsework beams to span the required horizontal distances and still provide the minimum vertical falsework clearance. Minimum vertical openings of less than 21′-6″ shall be coordinated with the HQ Design Office Railroad Liaison. For more information, please consult the *Union Pacific Railroad-BNSF Railway Guidelines for Railroad Grade Separation Projects*.

2.3.3 Water Crossings

2.3.3.A Bridge Width

The provisions of Section 2.3.1 pertaining to bridge width for highway crossings apply here.

2.3.3.B Horizontal Clearances

Water crossings over navigable waters requiring clearance for navigation channels shall satisfy the horizontal clearances required by the Coast Guard. Communication with the Coast Guard will be handled through the Coast Guard Liaison Engineer. For bridges over navigable waters, the centerline of the navigation channel and the horizontal clearances (to the nearest 0.1 foot) to the piers or the pier protection shall be shown on the Plan view of the Preliminary Plan. Pier locations shall be reviewed by the HQ Hydraulics unit.

2.3.3.C Vertical Clearances

Water crossings structures shall provide vertical clearance for both freeboard, maintenance, hydraulic and, where applicable, shall satisfy navigation clearance requirements.

Bridges over navigable waters shall satisfy the vertical clearances required by the Coast Guard. Communication with the Coast Guard will be handled through the Coast Guard Liaison Engineer. The actual minimum vertical clearance (to the nearest 0.1 foot) for the channel span shall be shown on the Preliminary Plan. The approximate location of the minimum vertical clearance shall be noted in the upper left margin of the plan. The clearance shall be shown to the water surface as required by the Coast Guard criteria.

Minimum vertical clearances for the 100-year design freeboard and Maintenance shall be determined and documented in accordance with the WSDOT *Design Manual* M 22-01 Section 720.03(5)(b)(4) for Water Crossing Structures. The roadway profile and the bridge superstructure depth shall accommodate all minimum vertical clearances provided.

The actual minimum vertical clearance to the 100-year flood shall be shown (to the nearest 0.1 foot) on the Preliminary Plan, and the approximate location of the minimum vertical clearance shall be noted in the upper left margin of the plan.

2.3.3.D End Slopes

The type and rate of end slopes for water crossings is similar to that for highway crossings. Soil conditions and stability, fill height, location of toe of fill, existing channel conditions, flood and scour potential, and environmental concerns are all important.

As with highway crossings, the Region, and State Geotechnical Office will make preliminary recommendations as to the type and rate of end slope. The State Hydraulics Branch will also review the Region's recommendation for slope protection.

2.3.3.E Determination of Bridge Length

Determining the overall length of a water crossing is not as simple and straightforward as for a highway crossing. Floodway requirements and environmental factors have a significant impact on where piers and fill can be placed.

If a water crossing is required to satisfy floodway and environmental concerns, it will be known by the time the Preliminary Plan has been started. Environmental studies and the Design Report prepared by the region will document any restrictions on fill placement, pier arrangement, and overall floodway clearance. The Hydraulics Branch will need to review the size, shape, and alignment of all bridge piers in the floodway and the subsequent effect they will have on the base flood elevation. The overall bridge length may need to be increased depending on the span arrangement selected and the change in the flood backwater, or justification will need to be documented.

2.3.3.F Scour and Stream Migration

The State Hydraulics Branch will indicate the anticipated depth of scour at the bridge piers. They will recommend pier shapes to best streamline flow and reduce the scour forces. They will also recommend measures to protect the piers from scour activity or accumulation of drift (use of deep foundations, minimum cover to top of footing, riprap, pier alignment to stream flow, closure walls between pier columns, etc.).

The State Hydraulics Branch will indicate the likelihood and severity of stream migration at the bridge piers. Where lateral stream migration is a possibility, the design shall include a reliability based estimate of the effects on the structure. The design requirements for stream migration is shown in BDM Section 7.1.7.

2.3.3.G Pier Protection

For bridges over navigable channels, piers adjacent to the channel may require pier protection such as fenders or pile dolphins. The Coast Guard will determine whether pier protection is required. This determination is based on the horizontal clearance provided for the navigation channel and the type of navigation traffic using the channel.

2.3.3.H Construction Access and Time Restrictions

Water crossings will typically have some sort of construction restrictions associated with them. These must be considered during preliminary plan preparation.

The time period that the Contractor will be allowed to do the work within the waterway may be restricted by regulations administered by various agencies. Depending on the time limitations, a bridge with fewer piers or faster pier construction may be more advantageous even if more expensive.

Contractor access to the water may also be restricted. Shore areas supporting certain plant species are sometimes classified as wetlands. A work trestle may be necessary in order to work in or gain access through such areas. Work trestles may also be necessary for bridge removal as well as new bridge construction. Work trestle feasibility, location, staging, deck area and approximate number of piles, and estimated cost need to be determined to inform the Region as part of the bridge preliminary plan.

2.3.3.I Buried structures that qualify as a bridge per National Bridge Inspection Standards (NBIS) shall be designed to meet above requirements for Water Crossings.

2.3.4 Bridge Widening

2.3.4.A Bridge Width

The provisions of Section 2.3.1 pertaining to bridge width for highway crossings shall apply. In most cases, the width to be provided by the widening will be what is called for by the design standards, unless a deviation is approved.

2.3.4.B Traffic Restrictions

Bridge widening involve traffic restrictions on the widened bridge and, if applicable, on the lanes below the bridge. The bridge site data submitted by the region should contain information regarding temporary lane widths and staging configurations. This information should be checked to be certain that the existing bridge width and the bridge roadway width during the intermediate construction stages of the bridge are sufficient for the lane widths, shy distances, temporary barriers, and construction room for the contractor. These temporary lane widths and shy distances are noted on the Preliminary Plan. The temporary lane widths and shy distances on the roadway beneath the bridge being widened should also be checked to ensure adequate clearance is available for any substructure construction.

2.3.4.C Construction Sequence

A construction sequence shall be developed using the traffic restriction data in the bridge site data. The construction sequence shall take into account the necessary steps for construction of the bridge widening including both the substructure and superstructure. Placement of equipment is critical because of limited access and working space limitations. Space is required for cranes to construct shafts and erect the girders. Consult the Construction Support Unit for crane information, such as: boom angle, capacities, working loads, working radius, and crane footprint. Construction work off of and adjacent to the structure and the requirements of traffic flow on and below the structure shall be taken into account. Generally, cranes are not allowed to lift loads while supported from the existing structure. Checks shall be made to be certain that girder spacing, closure pours, and removal work are all compatible with the traffic arrangements.

Projects with several bridges being widened at the same time should have sequencing that is compatible with the Region's traffic plans during construction and that allow the Contractor room to work. It is important to meet with the Region project staff to assure that the construction staging and channelization of traffic during construction is feasible and minimizes impact to the traveling public.

2.3.5 Temporary Bridges

The lane widths, shy distances, and overall roadway widths are determined by the Region. Review and approval of detour roadway widths is done by the HQ Traffic Office.

2.3.5.A Bridge Width

The lane widths, shy distances, and overall roadway widths are determined by the Region. Review and approval of detour roadway widths is done by the HQ Traffic Office.

2.3.5.B Live Load

For live load design criteria of temporary bridges, see Section 10.13.2.

2.3.5.C Temporary Bridge Type

Temporary bridge is typically designed by the Contractor per Contract Documents unless otherwise specified.

2.3.5.D Temporary Bridge Traffic Barrier

Temporary bridge traffic barrier shall be designed in accordance with Section 10.13.3.C.

2.3.6 Retaining Walls and Noise Walls

The requirements for Preliminary Plans for retaining walls and noise walls are similar to the requirements for bridges. The plan and elevation views define the overall limits and the geometry of the wall. The section view will show general structural elements that are part of the wall and the surface finish of the wall face.

The most common types of walls are outlined in Chapter 730 of the *Design Manual* M 22-01. The Bridge and Structures Office is responsible for all nonstandard walls (retaining walls and noise walls) as spelled out in the *Design Manual* M 22-01.

2.3.7 Bridge Deck Drainage

The State Hydraulics Branch provides a review of the Preliminary Plan with respect to the requirements for bridge deck drainage. An 11″ x 17″ print shall be provided to the State Hydraulics Branch for their review as soon as the Preliminary Plan has been developed. The length and width of the structure, profile grade, superelevation diagram, and any other pertinent information (such as locations of drainage off the structure) should be shown on the plan. For work with existing structures, the locations of any and all bridge drains shall be noted.

The State Hydraulics Branch or the Region Hydraulics staff will determine the type of drains necessary (if any), the location, and spacing requirements. They will furnish any details or modifications required for special drains or special situations.

If low points of sag vertical curves or superelevation crossovers occur within the limits of the bridge, the region should be asked to revise their geometrics to place these features outside the limits of the bridge. If such revisions cannot be made, the Hydraulics Branch will provide details to handle drainage with bridge drains on the structure.

2.3.8 Bridge Deck Protection Systems

An appropriate Bridge Deck Protection System shall be selected for each bridge in accordance with Section 5.7.4. The Preliminary Plan shall note in the lower left margin the type of Bridge Deck Protective System to be utilized on the bridge.

2.3.9 Construction Clearances

Most projects involve construction in and around traffic. Both traffic and construction must be accommodated. Construction clearances and working room must be reviewed at the preliminary plan stage to verify bridge constructability.

For construction clearances for roadways, the Region shall supply the necessary traffic staging information with the bridge site data. This includes temporary lane widths and shoulder or shy distances, allowable or necessary alignment shifts, and any special minimum vertical clearances. With this information, the designer can establish the falsework opening or construction opening.

The horizontal dimension of the falsework or construction opening shall be measured normal to the alignment of the road which the falsework spans. The horizontal dimension of the falsework or construction opening shall be the sum of the temporary traffic lane widths and shoulder or shy distances, plus two 2′ widths for the temporary concrete barriers, plus additional 2′ shy distances behind the temporary barriers. For multi-span falsework openings, a minimum of 2′, and preferably 4′, shall be used for the interior support width. This interior support shall also have 2′ shy on both sides to the two 2-foot wide temporary concrete barriers that will flank the interior support.

The minimum vertical clearance of the construction opening shall normally be 16′-6″ or as specified by the Region. The vertical space available for the falsework must be deep to accommodate the falsework stringers, camber strips, deck, and all deflections. If the necessary depth is greater than the space available, either the minimum vertical clearance for the falsework shall be reduced or the horizontal clearance and span for the falsework shall be reduced, or the profile grade of the structure shall be raised. Any of these alternatives shall be approved by the Region.

Once the construction clearances have been determined the designer should meet with the region to review the construction clearances to ensure compatibility with the construction staging. This review should take place prior to finalizing the preliminary bridge plan.

For railroads, see Section 2.3.2H.

2.3.10 Design Guides for Falsework Depth Requirements

Where falsework is required to support construction of cast-in-place superstructure or segmental elements, the designer of the Preliminary Plan shall confirm with the Region the minimum construction opening. See Section 2.3.9

The bridge designer shall consult with the Construction Support Engineer on falsework depth requirements outlined below.

Bridge designers shall evaluate falsework depth requirements based on the following guidelines:

2.3.10.A Falsework Spans < 36′ and No Skews

No evaluation is necessary. Provide for a minimum vertical clearance and a minimum falsework depth of 4′ to accommodate:

W36X___ steel beam sections
¾″ camber strip
⅝″plywood
4 x 4 joists
6″ depth for segmental falsework release

2.3.10.B Falsework Spans > 36′ or Spans with Skews or Limited Falsework Depth

While the falsework or construction openings are measured normal to the alignment which the falsework spans, the falsework span is measured parallel to the bridge alignment.

The Preliminary Plan designer shall perform preliminary design of the falsework sufficiently to determine its geometric and structural feasibility. Shallow, heavy, close-spaced wide-flange steel beams may be required to meet the span requirements within the available depth. The preliminary design shall be based on design guides in the *Standard Specifications* Section 6-02.3(17). Beams shall be designed parallel to the longitudinal axis of the bridge. The falsework span deflection shall be limited according to the *Standard Specifications* Section 6-02.3(17)B: generally span/360 for a single concrete placement, such as a slab, and span/500 for successive concrete placement forming a composite structure. This limits the stresses in the new structure from the construction and concrete placement sequences. Beam sizes shall be shown in the final plans (and in the Preliminary Plans as required) with the Contractor having the option of submitting an alternate design. The designer shall verify availability of the beam sizes shown in the plans.

2.3.10.C Bridge Widening

For bridge widening where the available depth for the falsework is fixed, designers shall design falsework using shallower and heavier steel beams to fit within the available depth. Beam sizes and details shall be shown in the final plans (and in the Preliminary Plans as required) with the Contractor having the option of using an alternate design. The designer shall verify availability of the beam sizes shown in the plans.

In some cases it may be appropriate to consider a shallower superstructure widening, but with similar stiffness, in order to accommodate the falsework and vertical clearance.

2.3.10.D Bridge with Skews

Falsework beams shall be laid out and designed for spans parallel to the bridge centerline or perpendicular to the main axis of bending. The centerline of falsework beams shall be located within 2′ of the bridge girder stems and preferably directly under the stems or webs in accordance with the *Standard Specifications* Section 6-02.3(17)E. Falsework beams placed normal to the skew or splayed complicate camber calculations and shall be avoided.

2.3.11 Inspection and Maintenance Access

2.3.11.A General

FHWA mandates that bridges be inspected every 24 months. The BPO inspectors are required to access bridge components to within 3′ for visual inspection and to access bearings close enough to measure movement. Maintenance personnel need to access damaged members and locations that may collect debris. This is accomplished by using many methods. Safety cables, ladders, bucket trucks, Under Bridge Inspection Truck (UBIT), (see Figure 2.3.11-1), and under bridge travelers are just a few of the most common methods. Preliminary Plan designers need to be aware of these requirements and prepare designs that allow access for bridge inspectors and maintenance personnel throughout the Preliminary Plan and TS&L planning phases.

Figure 2.3.11-1 Limits of Under Bridge Inspection Truck

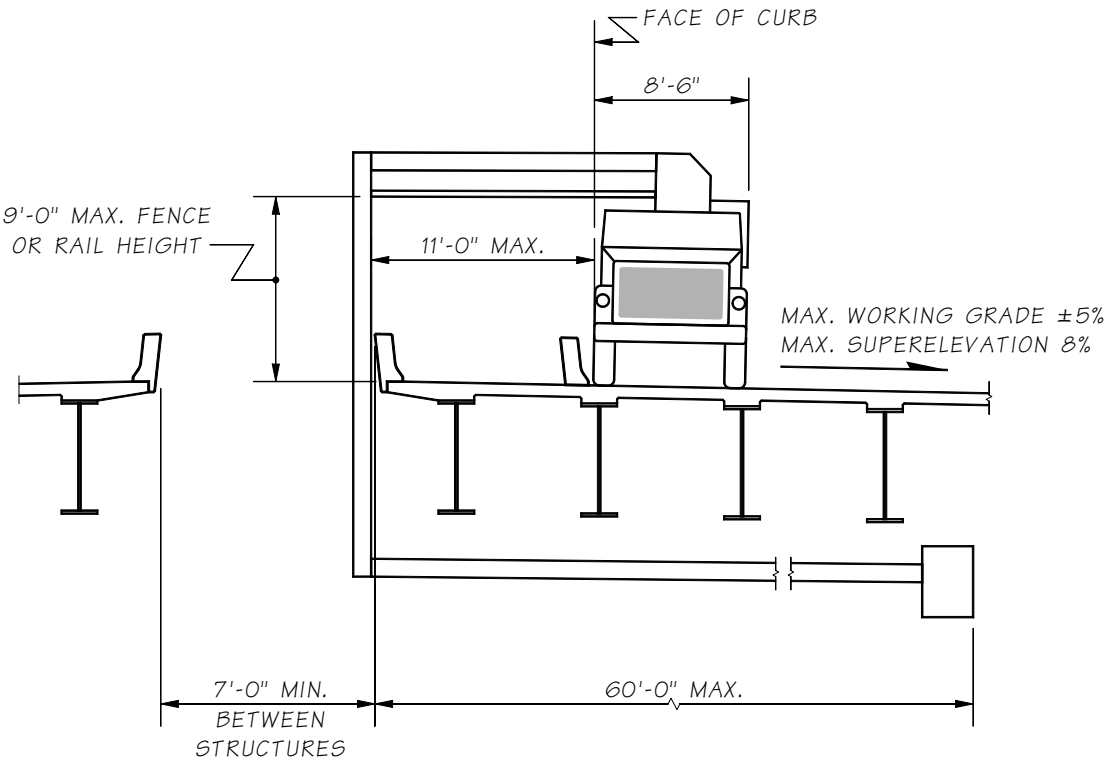

LIMITS OF UNDER BRIDGE INSPECTION TRUCK

UBITS CAN ONLY DEPLOY TO THE RIGHT SIDE OF TRUCK

2.3.11.B Safety Cables

Safety cables strung on steel plate girders or trusses allow for walking access. Care must be given to the application and location. Built-up plate girder bridges are detailed with a safety cable for inspectors walking the bottom flange. However, when the girders become more than 8′ deep, the inspection of the top flange and top lateral connections becomes difficult to access. It is not feasible for the inspectors to stand on the bottom flanges when the girders are less than 5′ deep. On large trusses, large gusset plates (3′ or more wide) are difficult to circumvent. Tie-off cables are best located on the interior side of the exterior girder of the bridge except at large gusset plates. At these locations, cables or lanyard anchors should be placed on the inside face of the truss so inspectors can utilize bottom lateral gusset plates to stand on while traversing around the main truss gusset plates.

2.3.11.C Travelers

Under bridge travelers, placed on rails that remain permanently on the bridge, can be considered on large steel structures. This is an expensive option, but it should be evaluated for large bridges with high average daily traffic (ADT) because access to the bridge would be limited by traffic windows that specify when a lane can be closed. Some bridges are restricted to weekend UBIT inspection for this reason.

2.3.11.D Abutment Slopes

Slopes in front of abutments shall provide enough overhead clearance to the bottom of the superstructure to access bearings for inspection and possible replacement (usually 3′ minimum).

2.3.11.E Inspection Lighting and Access

2.3.11.E.1 *Reinforced Concrete Box and Post-Tensioned Concrete Box Girders*

Refer to Section 5.2.6 for design criteria.

2.3.11.E.2 *Composite Steel Box Girders*

- All steel box or tub girders shall have inspection lighting and access.
- Inside clear height shall be 5 feet or greater to provide reasonable inspection access.
- Refer to Section 6.4.9 for design criteria.

2.4 Selection of Structure Type

2.4.1 Bridge Types

The required superstructure depth is determined during the preliminary plan development process. The LRFD-BDS Section 2.5.2.6.3 shows traditional minimum depths for constant depth superstructures. WSDOT has developed superstructure depth-to-span ratios based on past experience.

The LRFD-BDS Section 2.5.2.6.1, states that it is optional to check deflection criteria, except in a few specific cases. The WSDOT criteria is to check the live load deflection for all structures as specified in LRFD-BDS Section 3.6.1.3.2 and 2.5.2.6.2.

The superstructure depth is used to establish the vertical clearance that is available below the superstructure. For preliminary plans, the designer should use the more conservative depth determined from either the LRFD-BDS criteria or the WSDOT criteria outlined below. In either case, the minimum depth includes the deck thickness. For both simple and continuous spans, the span length is the horizontal distance between centerlines of bearings.

Refer to Section 2.3.11 for inspection and maintenance access requirements. Superstructure depth may be influenced when inspection lighting and access is required for certain bridge types.

The superstructure depth may be refined during the final design phase. It is assumed that any refinement will result in a reduced superstructure depth so the vertical clearance is not reduced from that shown in the preliminary plan. However, when profile grade limitations restrict superstructure depth, the preliminary plan designer shall investigate and/or work with the structural designer to determine a superstructure type and depth that will fit the requirements.

2.4.1.A Reinforced Concrete Slab

2.4.1.A.1 *Application*

Used for simple and continuous spans up to 60′.

2.4.1.A.2 *Characteristics*

Design details and falsework relatively simple. Shortest construction time for any cast-in-place structure. Correction for anticipated falsework settlement must be included in the dead load camber curve because of the single concrete placement sequence.

2.4.1.A.3 *Depth/Span Ratios*

1. **Constant Depth**

Simple span	1/22
Continuous spans	1/25

2. **Variable Depth**

   Adjust ratios to account for change in relative stiffness of positive and negative moment sections.

2.4.1.B Reinforced Concrete Tee-Beam

WSDOT restricts the use of cast-in-place reinforced concrete Tee-Beam girder for bridge superstructure. This type of superstructure may only be used for bridges with tight curvatures or irregular geometry upon Bridge Design Engineer approval.

2.4.1.B.1 *Application*

This type of Super Structure is not recommended for new bridges. It could only be used for bridge widening and bridges with tight curvature or unusual geometry.

Used for continuous spans 30′ to 60′. Has been used for longer spans with inclined leg piers.

2.4.1.B.2 *Characteristics*

Forming and falsework is more complicated than for a concrete slab. Construction time is longer than for a concrete slab.

2.4.1.B.3 *Depth/Span Ratios*

1. **Constant Depth**

Simple spans	1/13
Continuous spans	1/15

2. **Variable Depth**

Adjust ratios to account for change in relative stiffness of positive and negative moment sections.

2.4.1.C Reinforced Concrete Box Girder

WSDOT restricts the use of cast-in-place reinforced concrete box girder for bridge superstructure. This type of superstructure may only be used for bridges with tight curvatures or irregular geometry upon Bridge Design Engineer approval.

2.4.1.C.1 *Application*

This type of super structure is not recommended for new bridges. It could only be used for bridge widening and bridges with tight curvature or unusual geometry.

Used for continuous spans 50′ to 120′. Maximum simple span 100′ to limit excessive dead load deflections.

2.4.1.C.2 *Characteristics*

Forming and falsework is somewhat complicated. Construction time is approximately the same as for a tee-beam. High torsional resistance makes it desirable for curved alignments.

2.4.1.C.3 *Depth/Span Ratios**

1. **Constant Depth**

Simple spans	1/18
Continuous spans	1/20

2. **Variable Depth**

   Adjust ratios to account for change in relative stiffness of positive and negative moment sections.

   *If the configuration of the exterior web is sloped and curved, a larger depth/span ratio may be necessary.

2.4.1.D Post-tensioned Concrete Box Girder

2.4.1.D.1 *Application*

Normally used for continuous spans longer than 120′ or simple spans longer than 100′. Should be considered for shorter spans if a shallower structure depth is needed or for bridges with tight horizontal curvature.

2.4.1.D.2 *Characteristics*

Construction time is somewhat longer due to post-tensioning operations. High torsional resistance makes it desirable for curved alignments.

2.4.1.D.3 *Depth/Span Ratios**

1. **Constant Depth**

Simple spans	$\frac{1}{20.5}$
Continuous spans	$\frac{1}{25}$

2. **Variable Depth**

Two span structures	
At Center of span	$\frac{1}{25}$
At Intermediate pier	$\frac{1}{12.5}$
Multi-span structures	
At Center of span	$\frac{1}{36}$
At Intermediate pier	$\frac{1}{18}$

   *If the configuration of the exterior web is sloped and curved, a larger depth/span ratio may be necessary.

2.4.1.E Prestressed Concrete Girder Sections

2.4.1.E.1 *Application*

Local precast fabricators have several standard forms available for precast concrete sections based on the WSDOT standard girder series. These are versatile enough to cover a wide variety of span lengths.

WSDOT standard girders are:

1. WF100G, WF95G, WF83G, WF74G, WF58G, WF50G, WF42G, WF36G, W74G, W58G, W50G, and W42G precast, prestressed concrete I-girders requiring a cast-in-place reinforced concrete bridge deck used for spans less than 200-feet. The number (eg. 95) specifies the girder depth in inches.

WF95PTG, WF83PTG and WF74PTG post-tensioned, precast segmental I-girders with cast-in-place reinforced concrete bridge deck use for simple span up to 230-feet, and continuous span up to 250-feet with continuous post-tensioning over the intermediate piers.

2. U**G* and UF**G* precast, prestressed concrete tub girders requiring a cast-in-place reinforced concrete bridge deck are used for spans less than 140-feet. "U" specifies webs without flanges, "UF" specifies webs with flanges, ** specifies the girder depth in inches, and * specifies the bottom flange width in feet. U**G* girders have been precast as shallow as 26-inches.

   Post-tensioned, precast, prestressed tub girders with cast-in-place reinforced concrete bridge deck are used for simple span up to 160-feet and continuous span up to 200-feet.

3. W65DG, W53DG, W41DG, and W35DG precast, prestressed concrete decked bulb tee girders requiring a 1-½-inch minimum modified concrete overlay or a 3-inch minimum Hot Mix Asphalt (HMA) overlay wearing surface used for span less than 150-feet, with the Average Daily Traffic (ADT) limitation of 30,000 or less.

4. W62BTG, W38BTG, and W32BTG precast, prestressed concrete bulb tee girders requiring a cast-in-place reinforced concrete bridge deck for simple spans up to 130-feet.

5. 12-inch, 18-inch, 26-inch, 30-inch, and 36-inch precast, prestressed slabs requiring 5-inch minimum cast-in-place reinforced concrete bridge deck used for spans less than 100-feet.

6. 26-inch precast, prestressed ribbed girder, or double tee girder, used for spans less than 60-feet, and double tee members requiring an HMA overlay wearing surface used for spans less than 40-feet.

7. WF36TDG, WF42TDG, WF50TDG, WF58TDG, WF66TDG, WF74TDG, WF83TDG, WF95TDG, and WF100TDG precast, prestressed concrete thin top flange girders requiring a 5-inch minimum cast in place reinforced concrete bridge deck for simple spans up to 225-feet.

8. WF39DG, WF45DG, WF53DG, WF61DG, WF69DG, WF77DG, WF86DG, WF98DG, and WF103DG precast, prestressed concrete wide flange girders requiring a 1-½-inch minimum modified concrete or 3-inch minimum HMA overlay wearing surface used for spans less than 195-feet, with the Average Daily Traffic (ADT) limitation of 30,000 or less.

2.4.1.E.2 *Characteristics*

Superstructure design is quick for pre-tensioned girders with proven user-friendly software (PGSuper, PGSplice, and QConBridge)

Construction details and forming are fairly simple. Construction time is less than for a cast-in-place bridge. Little or no falsework is required. Falsework over traffic is usually not required; construction time over existing traffic is reduced.

Precast girders usually require that the bridge roadway superelevation transitions begin and end at or near piers; location of piers should consider this. The Region may be requested to adjust these transition points if possible.

Fully reinforced, composite 8 inch cast-in-place deck slabs continuous over interior piers or reinforced 5 inch cast-in-place deck slabs continuous over interior piers have been used with e. and f.

2.4.1.F Composite Steel Plate Girder

1. **Application**

   Used for simple spans up to 260′ and for continuous spans from 120′ to 400′. Relatively low dead load when compared to a concrete superstructure makes this bridge type an asset in areas where foundation materials are poor.

2. **Characteristics**

   Construction details and forming are fairly simple Construction time is comparatively short. Shipping and erecting of large sections must be reviewed. Cost of maintenance is higher than for concrete bridges. Current cost information should be considered because of changing steel market conditions.

3. **Depth/Span Ratios**

   A. **Constant Depth**

Simple spans	1/22
Continuous spans	1/25

   B. **Variable Depth**

@ Center of span	1/40
@ Intermediate pier	1/20

2.4.1.G Composite Steel Box Girder

2.4.1.G.1 *Use*

Used for simple spans up to 260′ and for continuous spans from 120′ to 400′. Relatively low dead load when compared to a concrete superstructure makes this bridge type an asset in areas where foundation materials are poor.

Inside clear height of less than 5 feet shall not be used because reasonable inspection access cannot be provided.

2.4.1.G.2 *Characteristics*

Construction details and forming are more difficult than for a steel plate girder. Shipping and erecting of large sections must be reviewed. Current cost information should be considered because of changing steel market conditions.

2.4.1.G.3 *Depth/Span Ratios*

1. **Constant Depth**

Simple spans	1/22
Continuous spans	1/25

2. **Variable Depth**

At Center of span	1/40
At Intermediate pier	1/20

Note: Sloping webs are not used on box girders of variable depth.

2.4.1.H Steel Truss (Through or Deck)

2.4.1.H.1 *Application*

Used for simple spans up to 300′ and for continuous spans up to 1,200′. Used where vertical clearance requirements dictate a shallow superstructure and long spans or where terrain dictates long spans and construction by cantilever method.

2.4.1.H.2 *Characteristics*

Construction details are numerous and can be complex. Cantilever construction method can facilitate construction over inaccessible areas. Through trusses are discouraged because of the resulting restricted horizontal and vertical clearances for the roadway.

2.4.1.H.3 *Depth/Span Ratios*

1. Simple spans $\frac{1}{6}$
2. Continuous spans

   @ Center of span $\frac{1}{18}$
   @ Intermediate pier $\frac{1}{9}$

2.4.1.I Segmental Concrete Box Girder

2.4.1.I.1 *Application*

Used for continuous spans from 200′ to 700′. Used where site dictates long spans and construction by cantilever method.

2.4.1.I.2 *Characteristics*

Use of travelers for the form apparatus facilitates the cantilever construction method enabling long-span construction without falsework. Precast concrete segments may be used. Tight geometric control is required during construction to ensure proper alignment.

2.4.1.I.3 *Depth/Span Ratios*

Variable depth
At Center of span $\frac{1}{50}$
At Intermediate pier $\frac{1}{20}$

2.4.1.J Railroad Bridges

2.4.1.J.1 *Use*

For railway over highway grade separations, most railroad companies prefer simple span steel construction. This is to simplify repair and reconstruction in the event of derailment or some other damage to the structure.

2.4.1.J.2 *Characteristics*

The heavier loads of the railroad live load require deeper and stiffer members than for highway bridges. Through girders can be used to reduce overall structure depth if the railroad concurs. Piers should be normal to the railroad to eliminate skew loading effects.

2.4.1.J.3 *Depth/Span Ratios*

Constant depth

Simple spans	1/12
Continuous two span	1/14
Continuous multi-span	1/15

2.4.1.K Timber

2.4.1.K.1 *Use*

Generally used for spans under 40′. WSDOT restricts the use of timber girders for bridge superstructures to non-vehicle use bridges or temporary bridges.

2.4.1.K.2 *Characteristics*

Excellent for short-term duration as for a detour. Simple design and details.

2.4.1.K.3 *Depth/Span Ratios*

Constant depth

Simple span – Timber beam	1/10
Simple span – Glulam beam	1/12
Continuous spans	1/14

2.4.1.L Other

Bridge types such as cable-stayed, suspension, arch, tied arch, and floating bridges have special and limited applications. The use of these bridge types is generally dictated by site conditions. Preliminary design studies will generally be done when these types of structures are considered.

2.4.2 Wall Types

Retaining walls, wingwalls, curtain walls, sound barrier walls, and tall closed abutment walls may be used where required to shorten spans or superstructure length or to reduce the width of approach fills. The process of selecting a type of retaining wall should economically satisfy structural, functional, and aesthetic requirements and other considerations relevant to a specific site. A detailed listing of the common wall types and their characteristics can be found in Section 8.3.

2.4.3 Buried Structure Types

Buried structures may be used where required in accordance with specific site conditions. The process of selecting a type of buried structure should economically satisfy structural, functional, and aesthetic requirements and other considerations relevant to a specific site. Detailed discussion of the common types of buried structures, their characteristics and appropriate applications is found in Section 8.3.

Refer to Section 2.3.3 for Freeboard and Maintenance access requirements.

2.5 Aesthetic Considerations

2.5.1 General Visual Impact

Bridge, retaining walls and noise walls have a strong visual impact in any landscape. Steps must be taken to assure that even the most basic structure will complement rather than detract from its surroundings. The EIS and bridge site data submitted by the Region should each contain a discussion on the aesthetic importance of the project site. This commentary, together with submitted video and photographs, will help the designer determine the appropriate structure type.

The State Bridge and Structures Architect should be contacted early in the preliminary bridge plan process for input on aesthetics. Normally, a visit to the bridge site with the State Bridge and Structures Architect and Region design personnel should be made.

Aesthetics is a very subjective element that must be factored into the design process in the otherwise very quantitative field of structural engineering. Bridges that are structurally efficient using the least material possible are generally visually well proportioned. However, the details such as pier walls, columns, and crossbeams require special attention to ensure a structure that will enhance the general vicinity.

For large projects incorporating several to many bridges and retaining walls, an architectural theme is frequently developed to bring consistency in structure type, details, and architectural appointments. The preliminary plan designer shall work with the State Bridge and Structures Architect to implement the theme.

2.5.2 End Piers

2.5.2.A Wingwalls

The size and exposure of the wingwall at the end pier should balance, visually, with the depth and type of superstructure used. For example, a prestressed girder structure fits best visually with a 15′ wingwall (or curtain wall/retaining wall). However, there are instances where a 20′ wingwall (or curtain wall/retaining wall) may be used with a prestressed girder (maximizing a span in a remote area, for example or with deep girders where they are proportionally better in appearance). The use of a 20′ wingwall shall be approved by the Bridge Design Engineer and the State Bridge and Structures Architect.

It is less expensive for bridges of greater than 40′ of overall width to be designed with wingwalls (or curtain wall/retaining wall) than to use a longer superstructure.

2.5.2.B Retaining Walls

For structures at sites where profile, right of way, and alignment dictate the use of high exposed wall-type abutments for the end piers, retaining walls that flank the approach roadway can be used to retain the roadway fill and reduce the overall structure length. Stepped walls are often used to break up the height, and allow for landscape planting. A curtain wall runs between the bridge abutment and the heel of the abutment footing. In this way, the joint in the retaining wall stem can coincide with the joint between the abutment footing and the retaining wall footing. This simplifies design and provides a convenient breaking point between design responsibilities if the retaining walls happen to be the responsibility of the Region. The length shown for the curtain wall dimension is an estimated dimension based on experience and preliminary foundation assumptions. It can be revised under design to satisfy the intent of having the wall joint coincide with the end of the abutment footing.

2.5.2.C Slope Protection

The Region is responsible for making initial recommendations regarding slope protection. It should be compatible with the site and should match what has been used at other bridges in the vicinity. The type selected shall be shown on the Preliminary Plan. It shall be noted on the "Not Included in Bridge Quantities" list.

2.5.2.D Noise Walls

Approval of the State Bridge and Structures Architect is required for the final selection of noise wall appearance, finish, materials and configuration.

2.5.3 Intermediate Piers

The size, shape, and spacing of the intermediate pier elements must satisfy two criteria. They must be correctly sized and detailed to efficiently handle the structural loads required by the design and shaped to enhance the aesthetics of the structure.

The primary view of the pier must be considered. For structures that cross over another roadway, the primary view will be a section normal to the roadway. This may not always be the same view as shown on the Preliminary Plan as with a skewed structure, for example. This primary view should be the focus of the aesthetic review.

Tapers and flares on columns should be kept simple and structurally functional. Fabrication and constructability of the formwork of the pier must be kept in mind. Crossbeam ends should be carefully reviewed. Skewed bridges and bridges with steep profile grades or those in sharp vertical curves will require special attention to detail.

Column spacing should not be so small as to create a cluttered look. Column spacing should be proportioned to maintain a reasonable crossbeam span balance.

2.5.4 Barrier and Wall Surface Treatments

2.5.4.A Plain Surface Finish

This finish will normally be used on structures that do not have a high degree of visibility or where existing conditions warrant. A bridge in a remote area or a bridge among several existing bridges all having a plain finish would be examples.

2.5.4.B Formliner Finishes

These finishes are the most common and an easy way to add a decorative texture to a structure. Variations on this type of finish can be used for special cases. The specific areas to receive this finish should be reviewed with the State Bridge and Structures Architect.

2.5.4.C Pigmented Sealer

The use of a pigmented sealer is used to control graffiti and can also be an aesthetic enhancement. Most commonly it is always used in urban areas. The selection should be reviewed with the State Bridge and Structures Architect and the Region.

2.5.4.D Architectural Details

Rustication grooves, relief panels, pilasters, and decorative finishes may visually improve appearance at transitions between different structure types such as cast-in-place abutments to structural earth retaining walls. Contact the State Bridge and Structures Architect for guidance.

In special circumstances custom designs may be provided. Designs rising to the level of art shall be subject to the procedures outlined in the *Design Manual* M 22-01

2.5.5 Superstructure

The horizontal elements of the bridge are perhaps the strongest features. The sizing of the structure depth based on the span/depth ratios in Section 2.4.1, will generally produce a balanced relationship.

Designs rising to the level of "Art" shall be subject to the procedures outlined in the *Design Manual* M 22-01.

Haunches or rounding of girders at the piers can enhance the structure's appearance. The use of such features should be kept within reason considering fabrication of materials and construction of formwork. The amount of haunch should be carefully reviewed for overall balance from the primary viewing perspective. Haunches are not limited to cast-in-place superstructures, but may be used in special cases on precast, prestressed I girders. They require job-specific forms which increase cost, and standard design software is not directly applicable.

The slab overhang dimension should approach that used for the structure depth. This dimension should be balanced between what looks good for aesthetics and what is possible with a reasonable slab thickness and reinforcement.

For box girders, the exterior webs can be sloped, but vertical webs are preferred. The amount of slope should not exceed l½: l for structural reasons, and should be limited to 4:1 if sloped webs are desired. Sloped webs should only be used in locations of high aesthetic impact.

When using precast, prestressed girders, all spans shall be the same series, unless approved otherwise by the Bridge Design Engineer.

2.6 Miscellaneous

2.6.1 Structure Costs

See Section 12.3 for preparing cost estimates for preliminary bridge design.

2.6.2 Handling and Shipping Precast Members and Steel Beams

Bridges utilizing precast concrete beams or steel beams need to have their access routes checked and sites reviewed to be certain that the beams can be transported to the site. It must also be determined that they can be erected once they reach the site.

Both the size and the weight of the beams must be checked. Likely routes to the site must be adequate to handle the truck and trailer hauling the beams. Avoid narrow roads with sharp turns, steep grades, and/or load-rated bridges, which may prevent the beams from reaching the site. The Bridge Preservation Office should be consulted for limitations on hauling lengths and weights.

Generally, 252 kips is the maximum weight of a girder that may be hauled by truck.

The site should be reviewed for adequate space for the contractor to set up the cranes and equipment necessary to pick up and place the girders. The reach and boom angle should be checked and should accommodate standard cranes.

2.7 WSDOT Standards for Highway Bridges

2.7.1 Design Elements

The following are standard design elements for bridges carrying highway traffic. They are meant to provide a generic base for consistent, clean looking bridges, and to reduce design and construction costs. Modification of some elements may be required, depending on site conditions. This should be determined on a case-by-case basis during the preliminary plan stage of the design process.

2.7.1.A General

Fractured Fin Finish shall be used on the exterior face of the traffic barrier. All other surfaces shall be Plain Surface Finish.

Exposed faces of wingwalls, columns, and abutments shall be vertical. The exterior face of the traffic barrier and the end of the intermediate pier crossbeam and diaphragm shall have a 1:12 backslope.

2.7.1.B Substructure

End piers use the following details:

15-foot wingwalls with prestressed concrete girders up to 74-inches in depth or a combination of curtain wall/retaining walls.

Stub abutment wall with vertical face. Footing elevation, pile type (if required), and setback dimension are determined from recommendations in the State Geotechnical Office Geotechnical Report.

Intermediate piers use the following details:

"Dropped" Crossbeams – The crossbeam below the girders is designed for the girder and bridge deck dead load, construction loads, live load, and superimposed dead loads. The minimum depth of the crossbeam shall be 3-feet. This crossbeam may be used for simple span continuous prestressed concrete girder bridges and continuous steel girder bridges.

"Semi-raised" Crossbeams – The crossbeam below the girders is designed for the girder and slab dead load, and construction loads. The crossbeam and the diaphragm together are designed for all live loads and composite dead loads. The minimum depth of the crossbeam shall be 3-feet.

"Raised" Crossbeams – The crossbeam is at the same level as the girders are designed for all dead and live loads.

Round Columns – Columns shall be 3-feet to 6-feet diameter. Dimensions are constant full height with no tapers. Bridges with roadway widths of 40-feet or less will generally be single column piers. Bridges with roadway widths of greater the 40-feet shall have two or more columns, following the criteria established in Section 2.3.1.H. Oval or rectangular column may be used if required for structural performance or bridge visual.

2.7.1.C Superstructure

Concrete Slab – 7½ inch minimum thickness with epoxy coated steel reinforcing bars in general with 5 inch minimum thickness for deck girders and 8 inch minimum thickness for steel girders.

Prestressed Concrete Girders – Girder spacing will vary depending on roadway width and span length. The bridge deck overhang dimension is approximately half of the girder spacing. Girder spacing typically ranges between 6-feet and 12-feet.

Intermediate Diaphragms – Locate in accordance with Table 5.6.2-1 and Section 5.6.4.C. Provide full or partial depth in accordance with Section 5.6.4.C.4.

End Diaphragms – "End Wall on Girder" type.

Traffic Barrier – Use 3'-6" high "F-shape" or Single-sloped barrier to meet worker fall protection requirements.

Fixed Diaphragm at Inter. Piers – Full or partial width of crossbeam between girders and outside of the exterior girders.

Hinged Diaphragm at Inter. Piers – Partial width of crossbeam between girders. Sloped curtain panel full width of crossbeam outside of exterior girders, fixed to ends of crossbeam.

BP Rail – 3′–6″ overall height for pedestrian traffic. 4′–6″ overall height for bicycle traffic.

Sidewalk – 6-inch height at curb line. Transverse slope of -0.02 feet per foot towards the curb line.

Sidewalk barrier – Inside face is vertical. Outside face slopes 1:12 outward.

Expansion Joints – refer to table in Section 9.1.1 for guidance regarding maximum bridge superstructure length beyond which the use of either intermediate expansion joints or modular expansion joints at the ends is required.

2.7.1.D Examples

Appendices 2.3-A2-1 and 2.7-A1-1 detail the standard design elements of a standard highway bridge.

The following bridges are good examples of a standard highway bridge. However, they do have some modifications to the standard.

SR 17 Undercrossing 395/110	Contract 3785
Mullenix Road Overcrossing 16/203E&W	Contract 4143

2.7.2 Detailing the Preliminary Plan

The Bridge or Culvert Preliminary Plan is used and reviewed by the Bridge and Structures Office or consultant who will do the structural design, Region designers and managers, Geotechnical engineers, Hydraulics engineers, Program managers, FHWA engineers and local agency designers and managers. It sometimes is used in public presentation of projects. With such visibility it is important that it's detailing is clear, complete, professional, and attractive. The designer, detailer, and checker shall strive for completeness and consistency in information, layout, line style, and fonts. Appendix B contains examples of Preliminary Plans following time-proven format that may be helpful. See also Chapter 11.

Typical sheet layout is as follows:

1. Plan and Elevation views. (This sheet ultimately becomes the Layout sheet of the design plan set)
2. Typical Section including details of stage construction.

   Superelevation diagrams, tables of existing elevations, Notes to Region, and other miscellaneous details as required shall go on Sheet 2, 3, or 4, as many as required. See also the Preliminary Plan Checklist for details, dimensions, and notes typically required. The completed plan sheets shall be reviewed for consistency by the Preliminary Plans Detailing Specialist.

2.8 Bridge Security

2.8.1 General

Security based bridge design and its direct correlation to modern social issues is addressed in this section. Criminal activity, illegal encampments, graffiti, hindrance to economic development and public eyesore create unwanted expensive. They also pose safety hazard for State Maintenance and Operations practices. The issue exists in urban areas as well as rural and recreational locales.

Bridges are dominant structures in landscapes. They are held to a higher standard of design due to their influence on communities, where economic and social settings are affected by their quality. Initial project cost savings may quickly be overshadowed by increased externalized costs. These externalized costs are born by local municipalities and businesses as well as other departments within WSDOT.

WSDOT bridge inspectors are required to inspect all bridges at least once every 24 months. The presence of the illegal encampments, as well as garbage, hypodermic needles, and feces often makes it impossible to do a close, hands-on inspection of the abutments and bearings of bridges. The Bridge Preservation Office has requested that maintenance clean up transient camps when it becomes difficult or impossible to do an adequate inspection of the bridges. Campfires set by the homeless have also caused damage to bridges.

Bridge Maintenance Crews also face the same difficulty when they need to do repair work on bridges in the urban area. Clean up requires (per law) posting the bridge seventy-two hours prior to any work. Material picked up is tagged, bagged, and stored for retrieval. Often the offenders are back the next day.

2.8.2 Design

Design is determined on a case by case basis using two strategies. These strategies are universally accepted best practices. The first, Crime Prevention through Environmental Design (CPTED), is a multi-disciplinary approach to deterring criminal behavior. The second, Context Sensitive Solutions (CSS), is also multi-disciplinary and focuses on project development methods. Multi-disciplinary teams consist of engineers and architects but may include law enforcement, local businesses, social service providers, and psychologists.

1. CPTED principals are based upon the theory that the proper design and effective use of the built environment can reduce crime, reduce the fear of crime, and improve the quality of life. Built environment implementations of CPTED seek to dissuade offenders from committing crimes by manipulating the built environment in which those crimes proceed from or occur. The six main concepts are territoriality, surveillance, access control, image/maintenance, activity support and target hardening. Applying all of these strategies is key when preventing crime in any neighborhood or right-of-way.

Natural surveillance and access control strategies limit the opportunity for crime. Territorial reinforcement promotes social control through a variety of measures. These may include enhanced aesthetics or public art. Image/maintenance and activity support provide the community with reassurance and the ability to stop crime by themselves. Target hardening strategies may involve fencing or concrete enclosures or they may include all techniques to resolve crime or chronic trespass into one final step.

2. WSDOT implements FHWA's CSS design development principles. The CSS methods require designers to consider the physical, economic, and social setting of a project. Stakeholder's interests are to be accounted for; including area residents and business owners.

2.8.3 Design Criteria

New bridges need to address design for the environment by basic criteria:

- Slopes under bridges need to be steep slope, and hardened with something like solid concrete so that flat areas cannot be carved into the hillside. Flat areas under bridge superstructures attract inappropriate uses and should be omitted.
- Illegal urban campers have been known to build shelters between the concrete girders. Abutment walls need to be high enough that they deny access to the superstructure elements. When it is not feasible to design for deterrence the sites need to be hardened with fencing buried several feet into the soil or with solid concrete walls. See Figures 2.8.3-1 and 2.8.3-2 for high security fence and concrete wall examples.
- Regular chain link is easy cut, therefore stouter material needs to be specified.
- Landscape design should coordinate with region or headquarters landscape architects. Areas need to be visible to law enforcement.

Figure 2.8.3-1 Bent Type Abutment Plan

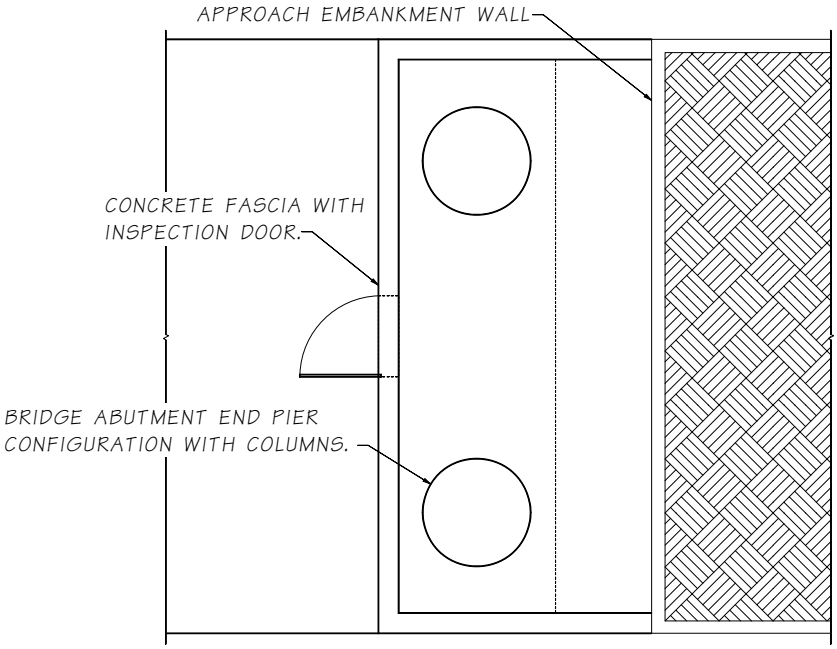

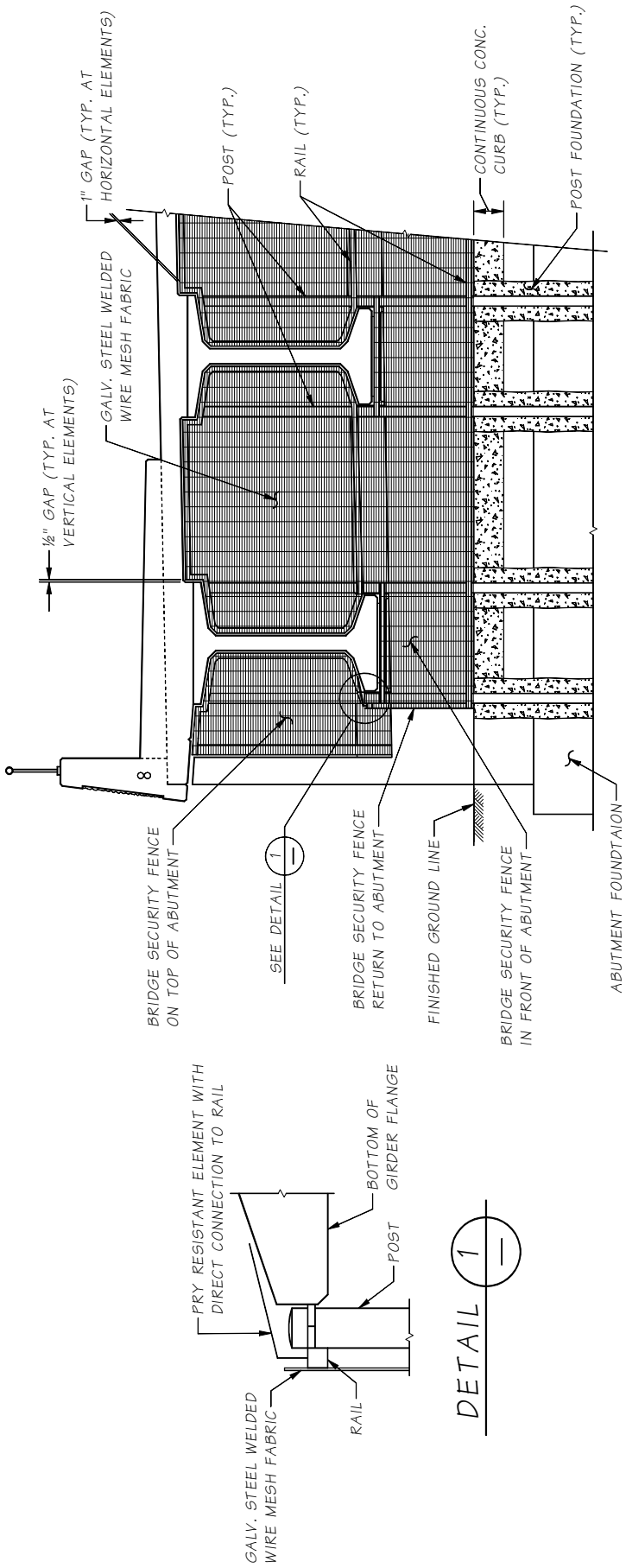
1" GAP (TYP. AT HORIZONTAL ELEMENTS)
POST (TYP.)
RAIL (TYP.)
CONTINUOUS CONC. CURB (TYP.)
POST FOUNDATION (TYP.)
½" GAP (TYP. AT VERTICAL ELEMENTS)
GALV. STEEL WELDED WIRE MESH FABRIC
BRIDGE SECURITY FENCE ON TOP OF ABUTMENT
SEE DETAIL 1
BRIDGE SECURITY FENCE RETURN TO ABUTMENT
FINISHED GROUND LINE
BRIDGE SECURITY FENCE IN FRONT OF ABUTMENT
ABUTMENT FOUNDTAION
PRY RESISTANT ELEMENT WITH DIRECT CONNECTION TO RAIL
BOTTOM OF GIRDER FLANGE
POST
GALV. STEEL WELDED WIRE MESH FABRIC
RAIL
DETAIL 1

Figure 2.8.3-2

2.9 Bridge Standard Drawings

2-B-1	Bridge Preliminary Plan Example - Precast Slab Bridge
2-B-2	Bridge Preliminary Plan Example - Temporary Bridge
2-B-3	Bridge Preliminary Plan Example - Bridge Cross Sections
2-B-4	Bridge Preliminary Plan Example - Precast Tub Girder Bridge
2-B-5	Bridge Preliminary Plan Example - Bridge Cross Section
2-B-6	Bridge Preliminary Plan Example - Roadway Data
2-B-7	Bridge Preliminary Plan Example - Precast Girder Bridge Widening
2-B-8	Bridge Preliminary Plan Example - Widened Bridge Cross Section
2-B-9	Bridge Preliminary Plan Example - Existing Roadway Survey Data
2.3-A1	Bridge Stage Construction Comparison
2.3-A2	Bridge Redundancy Criteria
2.7-A1	Standard Superstructure Elements

2.10 Appendices

Appendix 2.2-A1	Bridge Site Data General
Appendix 2.2-A2	Structure Site Data Rehabilitation
Appendix 2.2-A3	Structure Site Data Stream Crossings
Appendix 2.2-A4	Preliminary Plan Checklist
Appendix 2.2-A5	Request For Geotechnical & Hydraulic Information for Bridge Preliminary PlanRequest For Geotechnical & Hydraulic Information for Bridge Preliminary Plan

Appendix 2.2-A1 Bridge Site Data General

Washington State Department of Transportation

Structure Site Data General

Region	Made By	Date

Structure Information

SR	Structure Name	Control Section	Project No.

Highway Section	Section, Township & Range	Datum

Roadway width between curbs	What are expected foundation conditions?
Will the structure be widened in a contract subsequent to this contract ? ☐ Yes ☐ No ☐ N/A Which side and amount ?	When can foundation drilling be accomplished?
Will the roadway under the structure be widened in the future? ☐ Yes ☐ No ☐ N/A	Is slope protection or riprap required for the structure end slope ☐ Yes ☐ No ☐ N/A
Stage construction requirements? ☐ Yes ☐ No ☐ N/A	Are sidewalks to be provided? ☐ Yes ☐ No ☐ N/A If Yes, which side and width?
Should the additional clearance for off-track railroad maintenance equipment be provided?	Will there be bicycle traffic using this structure ☐ Yes ☐ No ☐ N/A If Yes, which side(s)?
Can a pier be placed in the median? ☐ Yes ☐ No ☐ N/A	Will signs or illumination be attached to the structure? ☐ Yes ☐ No ☐ N/A
What are the required falsework or construction opening dimensions ?	Will utility conduits be incorporated in the bridge? ☐ Yes ☐ No ☐ N/A
Are there detour or shoofly requirements? (If Yes, attach drawings) ☐ Yes ☐ No ☐ N/A	What do the traffic barriers on the structure transition to?
Can the R/W be adjusted to accommodate toe of approach fills? ☐ Yes ☐ No ☐ N/A	
What is the required vertical clearance?	Furnish type and location of existing features within the limits of this project, such as retaining walls, sign support structures, utilities, buildings, powerlines, etc.
What is the available depth for superstructure?	
Are overlays planned for a contract subsequent to this contra ☐ Yes ☐ No ☐ N/A	Are there security issues, such as the presence of illegal campers, that require design considerations?
Can profile be revised to provide greater or less clearance? ☐ Yes ☐ No ☐ N/A If Yes, which line and how much?	Any other data relative to selection of type, including your recommendations?
Will structure be constructed before, with or after approach ☐ Before ☐ With ☐ After ☐ N/A	

Attachments

- ☐ Vicinity Map
- ☐ Structure Site Contour Ma
- ☐ Specific Roadway sections at structure site and approved roadway sec
- ☐ Vertical Profile Data
- ☐ Horizontal Curve Data
- ☐ Superelevation Transition Diagrams
- ☐ Tabulated field surveyed and measured stations, offsets, and elevations of existing roadways (See Design Manual M 22-01, Cha
- ☐ Photographs and video of structure site, adjacent existing structures and surrounding terrain
- ☐
- ☐

DOT Form 235-002
Revised 07/2017

Appendix 2.2-A2 Structure Site Data Rehabilitation

Washington State Department of Transportation

Structure Site Data Rehabilitation

Region	Made By	Date

Structure Information

SR	Structure Name	Control Section	Project No.

Highway Section	Section, Township & Range	Vertical Datum

Existing roadway width, curb to curb _____ Left of ℄ _____ Right of ℄ _____

Proposed roadway width, curb to curb _____ Left of ℄ _____ Right of ℄ _____

Existing wearing surface *(concrete, HMA, HMA w /membrane, MC, epoxy, other)* _____ Thickness _____

Existing drains to be plugged, modified, moved, other? _____

Proposed overlay *(HMA, HMA w /membrame, MC, epoxy)* _____ Thickness _____

Is traffic barrier/railing to be modified? ☐ Yes ☐ No

Existing rail type _____

Proposed rail replacement type _____

Will terminal design "F" be required? ☐ Yes ☐ No

Will utilities be placed in the new barrier? ☐ Yes ☐ No

Will the structure be overlayed with or after rail replacement? ☐ With Rail Replacement ☐ After Rail Replacement

Condition of existing expansion joints _____

Existing expansion joints watertight? ☐ Yes ☐ No

Measure width of existing expansion joint, normal to skew. @ curb line _____ Inch @ ℄ roadway _____ Inch @ curb line _____ Inch

Estimate structure temperature at time of expansion joint measurement _____

Type of existing expansion joint _____

Describe damage, if any, to existing expansion joints _____

Existing Vertical Clearance _____

Proposed Vertical Clearance (at curb lines of traffic barrier) _____

Attachments

☐ Video tape of project

☐ Sketch indicating points at which expansion joint width was measured.

☐ Photographs of existing expansion joints.

☐ Existing deck chloride and delamination data.

☐ Roadway deck elevations at curb lines (10-foot spacing)

DOT Form 235-002A
Revised 07/201

Appendix 2.2-A3 Structure Site Data Stream Crossings

Washington State Department of Transportation

Structure Site Data Stream Crossings

Region	Made By	Date

Structure Information

SR	Structure Name	Control Section	Project No.

Highway Section	Section, Township & Range	Datum (e.g. NGVD29, NAVD88, USGS)

Name of Stream	Tributary of

Elevation of W.S. *(@ Date/Time of survey)*

_____

Streambed Material

☐ Fines ☐ Gravel ☐ Boulder
☐ Sand ☐ Cobble

☐ **Non-Tidal**

	Flow (CFS)	WSE (ft)
2-YR		
100-YR		
500-YR		

☐ **Tidal**

	Flow (CFS)	WSE (ft)
2-YR		
100-YR		
500-YR		
MLLW		
MHHW		

Amount and Character of Drift

_____

Manning's "N" Value *(Est.)*

_____

Attachments

☐ Site Contour Map *(See Sect. 710.04 WSDOT Design Manual)*

☐ Highway Alignment and Profile *(refer to base map and profiles)*

☐ Streambed: Profile and Cross Sections defining bankfull width and bank shelf widths and slopes *(See Sect. 710.03 WSDOT Design Manual)*

☐ Photographs

☐ Character of Stream Banks *(e.g., rock, silt.)* / Location of Solid Rock

☐ Other Data Relative to Selection of Type and Design of Structure, Including your Recommendations *(e.g., requirements of riprap, permission of piers in channel.)*

DOT Form 235-001
Revised 11/2019

Appendix 2.2-A4 Preliminary Plan Checklist

Project _____ SR _____ Prelim. Plan by _____ Check by _____ Date_____

Plan

_____ Survey Lines and Station Ticks
_____ Survey Line Intersection Angles
_____ Survey Line Intersection Stations
_____ Survey Line Bearings
_____ Roadway and Median Widths
_____ Lane and Shoulder Widths
_____ Sidewalk Width
_____ Connection/Widening for Guardrail/Barrier
_____ Profile Grade and Pivot Point
_____ Roadway Superelevation Rate (if constant)
_____ Lane Taper and Channelization Data
_____ Traffic Arrows
_____ Mileage to Junctions along Mainline
_____ Back to Back of Pavement Seats
_____ Span Lengths
_____ Lengths of Walls next to/part of Bridge
_____ Pier Skew Angle
_____ Bridge Drains, or Inlets off Bridge
_____ Existing drainage structures
_____ Existing utilities Type, Size, and Location
_____ New utilities - Type, Size, and Location
_____ Luminaires, Junction Boxes, Conduits
_____ Bridge mounted Signs and Supports
_____ Contours
_____ Top of Cut, Toe of Fill
_____ Bottom of Ditches
_____ Test Holes (if available)
_____ Riprap Limits
_____ Stream Flow Arrow
_____ R/W Lines and/or Easement Lines
_____ Points of Minimum Vertical Clearance
_____ Horizontal Clearance
_____ Exist. Bridge No. (to be removed, widened)
_____ Section, Township, Range
_____ City or Town
_____ North Arrow
_____ SR Number
_____ Bearing of Piers, or note if radial

Miscellaneous

_____ Structure Type
_____ Live Loading
_____ Undercrossing Alignment Profiles/Elevs.
_____ Superelevation Diagrams
_____ Curve Data
_____ Riprap Detail
_____ Plan Approval Block
_____ Notes to Region
_____ Names and Signatures
_____ Not Included in Bridge Quantities List
_____ Inspection and Maintenance Access

Elevation

_____ Full Length Reference Elevation Line
_____ Existing Ground Line x ft. Rt of Survey Line
_____ End Slope Rate
_____ Slope Protection
_____ Pier Stations and Grade Elevations
_____ Profile Grade Vertical Curves
_____ BP/Pedestrian Rail
_____ Barrier/Wall Face Treatment
_____ Construction/Falsework Openings
_____ Minimum Vertical Clearances
_____ Water Surface Elevations and Flow Data
_____ Riprap
_____ Seal Vent Elevation
_____ Datum
_____ Grade elevations shown are equal to ...
_____ For Embankment details at bridge ends...
Indicate F, H, or E at abutments and piers

Typical Section

_____ Bridge Roadway Width
_____ Lane and Shoulder Widths
_____ Profile Grade and Pivot Point
_____ Superelevation Rate
_____ Survey Line
_____ Overlay Type and Depth
_____ Barrier Face Treatment
_____ Limits of Pigmented Sealer
_____ BP/Pedestrian Rail dimensions
_____ Stage Construction, Stage traffic
_____ Locations of Temporary Concrete Barrier
_____ Closure Pour
_____ Structure Depth/Prestressed Girder Type
_____ Conduits/Utilities in bridge
_____ Substructure Dimensions
_____ Bridge Inspection Lighting and Access

Left Margin

_____ Job Number
_____ Bridge (before/with/after) Approach Fills
_____ Structure Depth/Prestressed Girder Type
_____ Deck Protective System
_____ Coast Guard Permit Status (Requirement for all water crossing)
_____ Railroad Agreement Status
_____ Points of Minimum Vertical Clearance
_____ Cast-in-Place Concrete Strength

Right Margin

_____ Control Section
_____ Project Number
_____ Region
_____ Highway Section
_____ SR Number
_____ Structure Name

Appendix 2.2-A5 Request For Geotechnical & Hydraulic Information for Bridge Preliminary Plan

Request For Geotechnical & Hydraulics Information For Bridge Preliminary Plans

Date: Requested By: Geotech Info Rovided By:

Hydraulics Info Provided By:

Project Name & Location:

Back Of Pavement Seat Stations (Bridge Or Structure Limits):

Geotechnical Information Requested	PIER:	PIER:	PIER:	PIER:	PIER:
	STA:	STA:	STA:	STA:	STA:
Anticipated foundation type: shallow, deep, or complex/very deep					
If shallow, expect seal/coffer dams: Yes or No					
If deep, expected type: pile, shaft, unknown					
If shaft casing requirements: permanent, temporary, both, unknown					
Bridge and slopes: 2:1 or other (fill in)					
Landslide risk: Yes or No					
Liquefaction/lateral spread risk: Yes or No					
Anticipate soil improvement: Yes or No					
Early boring(s) recommended: Yes or No					
Any additional comments or concerns:					
Hydraulics Information Requested					
Scour potential: Yes or No					
Channel migration risk: High or Low					
Early boring(s) recommended: Yes or No					
Any additional comments or concerns:					

2.99 References

1. Federal Highway Administration (FHWA) publication *Federal Aid Highway Program Manual*

   FHWA Order 5520.1 (dated December 24, 1990) contains the criteria pertaining to Type, Size, and Location studies.

   Volume 6, Chapter 6, Section 2, Subsection 1, Attachment 1 (Transmittal 425) contains the criteria pertaining to railroad undercrossings and overcrossings.

2. WAC480-60 *Railroad Companies - Clearances*

3. American Railway Engineering and Maintenance Association (AREMA) *Manual for Railroad Engineering*

   Note: This manual is used as the basic design and geometric criteria by all railroads. Use these criteria unless superseded by FHWA or WSDOT criteria.

4. WSDOT *Design Manual* M 22-01

5. WSDOT *Geotechnical Design Manual* M 46-03

6. WSDOT *Hydraulics Manual* M 23-03

7. WSDOT *Local Agency Guidelines* M 36-63

8. American Association of State Highway and Transportation Officials AASHTO LRFD *Bridge Design Specification*

9. *Union Pacific Railroad-BNSF Railway Guidelines for Railroad Grade Separation Projects*

10. WSDOT *Context Sensitive Solutions Executive Order* E 1028

11. Newman, O. Defensible Space: Crime Prevention Through Urban Design. New York: Macmillan. 1972

12. Jacobs, Jane. The Death and Life of Great American Cities. New York: Random House. 1961

Chapter 3 Contents

3.1 Scope . . . 3-1

3.2 Definitions . . . 3-2

3.3 Load Designations . . . 3-3

3.4 Limit States . . . 3-4

3.5 Load Factors and Load Combinations . . . 3-5

3.5.1 Load Factors for Substructure . . . 3-6

3.6 Loads and Load Factors for Construction . . . 3-7

3.7 Load Factors for Post-tensioning . . . 3-8

3.7.1 Post-tensioning Effects from Superstructure . . . 3-8

3.7.2 Secondary Forces from Post-tensioning, PS . . . 3-8

3.8 Permanent Loads . . . 3-9

3.8.1 Deck Overlay Requirement . . . 3-9

3.8.2 Distribution of Permanent Loads . . . 3-9

3.9 Live Loads . . . 3-10

3.9.1 Design Live Load . . . 3-10

3.9.2 Loading for Live Load Deflection Evaluation . . . 3-10

3.9.3 Distribution to Superstructure . . . 3-10

3.9.3.A Multi Girder Superstructure . . . 3-10

3.9.3.B Concrete Box Girders . . . 3-11

3.9.3.C Multiple Presence Factors . . . 3-11

3.9.3.D Distribution to Substructure . . . 3-11

3.9.3.E Distribution to Crossbeam . . . 3-11

3.9.4 Bridge Load Rating . . . 3-12

3.10 Pedestrian Loads . . . 3-13

3.11 Wind Loads . . . 3-14

3.11.1 Wind Load to Superstructure . . . 3-14

3.11.2 Wind Load to Substructure . . . 3-14

3.11.3 Wind on Noise Walls . . . 3-14

3.12 Loads on Buried Structures . . . 3-15

3.13 Earthquake Effects . . . 3-16

3.14 Substructure, Scour and Earth Pressure . . . 3-17

3.15 Force Effects Due to Superimposed Deformations . . . 3-18

3.16 Other Loads 3-19
3.16.1 Buoyancy 3-19
3.16.2 Collision Force on Bridge Substructure 3-19
3.16.3 Collision Force on Traffic Barrier 3-19
3.16.4 Force from Stream Current, Floating Ice, and Drift 3-19
3.16.5 Ice Load 3-19
3.16.6 Uniform Temperature Load 3-19
3.16.7 Vehicular Collision Force: CT 3-19
3.16.8 Bridges Subjected to Tsunami Effects 3-20
3.99 References 3-22

Chapter 3 Loads

3.1 Scope

The current AASHTO *Load and Resistance Factor Design (LRFD) Bridge Design Specifications* and applicable AASHTO *Guide Specifications* shall be the minimum design criteria used for all bridges except as modified herein.

3.2 Definitions

The definitions in this section supplement those given in LRFD-BDS Section 3.

Permanent Loads – Loads and forces that are, or are assumed to be, either constant upon completion of construction or varying only over a long time interval.

Transient Loads – Loads and forces that can vary over a short time interval relative to the lifetime of the structure.

Temporary Loads – Loads that occur for a limited duration during pre-service conditions

Construction Loads – Loads that occur during any construction activity and include imposed loads due to falsework and formwork, material stockpiles when permitted, and construction equipment

Tsunami Loads – Loads that occur as result of tsunami

3.3 Load Designations

Load designations follow LRFD-BDS Article 3.3.2, and as specified in this section.

3.4 Limit States

The basic limit state equation given by LRFD-BDS 1.3.2.1 is as:

$$\Sigma\eta_i\gamma_i Q_i \le \phi R_n = R_r \quad (3.4\text{-}1)$$

For loads for which a maximum value of γ_i is appropriate

$$\eta_i = \eta_D\eta_R\eta_I \ge 0.95$$

For loads for which a minimum value of γ_i is appropriate:

$$\eta_i = \frac{1}{\eta_D\eta_R\eta_I} \le 1.0$$

where:

η_i = load modifier
γ_i = load factor
Q_i = force effect
ϕ = resistance factor
R_n = nominal resistance
R_r = factored resistance

The modifier, η_i is the product of factors for ductility, redundancy, and importance. For simplicity use a value of 1.0 for η_i except for the design of columns when a minimum value of γ_i is appropriate. In such a case, use η_i = 0.95. Compression members in seismic designs are proportioned and detailed to ensure the development of significant and visible inelastic deformations at the extreme event limit states before failure.

Strength IV load combination shall not be used for foundation design.

The load factor for live load in the Service III load combination shall be as specified in Section 3.5.

The tsunami load is considered an Extreme Event load with load factor of 1.0 and load combination similar to Extreme Event I.

3.5 Load Factors and Load Combinations

The limit states load combinations, and load factors (γ_i) used for structural design are in accordance with the LRFD-BDS Table 3.4.1-1. For foundation design, loads are factored after distribution through structural analysis or modeling.

The design live load factor for the Service III Limit State load combination shall be as follows:

γ_{LL} = 0.8 when the requirements of Sections 5.6.1 and 5.6.2 are satisfied and stress analysis is based on gross section properties.

γ_{LL} = 1.0 when the requirements of Sections 5.6.1 and 5.6.2 are satisfied and stress analysis is based on transformed section properties.

In special cases that deviate from the requirements of Sections 5.6.1 and 5.6.2 and have been approved by the WSDOT Bridge Design Engineer, γ_{LL}, shall be as specified in LRFD-BDS Table 3.4.1-4.

The Service III live load factor for load rating shall be as specified in Section 13.1.1.

The live load factor for Extreme Event-I Limit State load combination, γ_{EQ} as specified in the LRFD-BDS Table 3.4.1-1 for all WSDOT bridges and walls shall be taken equal to 0.50. The γ_{EQ} factor applies to the live load force effect obtained from the bridge live load analysis. Associated mass of live load need not be included in the dynamic analysis.

The LRFD-BDS allows the live load factor in Extreme Event-I load combination, γ_{EQ}, to be determined on a project specific basis. The commentary indicates that the possibility of partial live load, i.e., γ_{EQ} < 1.0, with earthquakes should be considered. The application of Turkstra's rule for combining uncorrelated loads indicates that γ_{EQ} = 0.50 is reasonable for a wide range of values of average daily truck traffic (ADTT). The NCHRP Report 489 recommends live load factor for Extreme Event-I Limit State, γ_{EQ} equal to 0.25 for all bridges. This factor shall be increased to γ_{EQ} equal to 0.50 for bridges located in main state routes and congested roads.

Since the determination of live load factor, γ_{EQ} is based on ADTT or bridges located in congested roads could be confusing and questionable, it is decided that live load factor of γ_{EQ} equal to 0.50 to be used for all WSDOT bridges regardless the bridge location or traffic congestion. The live load factor equal to zero shall be used for tsunami load combination.

The base construction temperature may be taken as 64°F for the determination of Temperature Load.

The load factors γ_{TG} and γ_{SE} are to be determined on a project specific basis in accordance with LRFD-BDS 3.4.1 and 3.12. Load Factors for Permanent Loads, γ_p are provided in LRFD-BDS Table 3.4.1-2.

The load factor for down drag loads shall be as specified in the LRFD-BDS Table 3.4.1-2. The Geotechnical Report will provide the down drag force (*DD*). The down drag force is a load applied to the pile/shaft with the load factor specified in the Geotechnical Report. Generally, live loads (*LL*) are less than the down drag force and should be omitted when considering down drag forces.

The Load Factors for Superimposed Deformations are provided in Table 3.5-3 below.

Table 3.5-3 Load Factors for Superimposed Deformations

	PS	CR, SH
Superstructure	1.0	1.0
Substructures that are fixed at the base and have a longitudinal connection with the superstructure (such as a hinged or integral connection) and analyzed using the gross moment of inertial (I_g)	0.5	0.5
All other substructure supporting Superstructure analyzed using either gross moment of inertia (I_g) or the effective cracked moment of inertia ($I_{effective}$)	1.0	1.0

3.5.1 Load Factors for Substructure

Table 3.5-4 below provides general guidelines for when to use the maximum or minimum shaft/pile/column permanent load factors for axial capacity, uplift, and lateral loading.

In general, substructure design should use unfactored loads to obtain force distribution in the structure. Moment, shear and axial force responses are then factored for final structural design. All forces and load factors are as defined previously.

Table 3.5-4 Minimum/Maximum Substructure Load Factors for Strength Limit State

Axial Capacity	Uplift	Lateral Loading
DC_{max}, DW_{max}	DC_{min}, DW_{min}	DC_{max}, DW_{max}
DC_{max}, DW_{max} for causing shear	DC_{max}, DW_{max} for causing shear	DC_{max}, DW_{max} causing shear
DC_{min}, DW_{min} for resisting shear	DC_{min}, DW_{min} *for resisting shear*	DC_{min}, DW_{min} resisting shear
DC_{max}, DW_{max} for causing moments	DC_{max}, DW_{max} for causing moments	DC_{max}, DW_{max} for causing moments
DC_{min}, DW_{min} for resisting moments	DC_{min}, DW_{min} for resisting moments	DC_{min}, DW_{min} for resisting moments
EV_{max}	EV_{min}	EV_{max}
DD = varies	DD = varies	DD = varies
EH_{max}	EH_{max} if causes uplift	EH_{max}

In the table above, “causing moment” and “causing shear” are taken to be the moment and shear causing axial, uplift, and lateral loading respectively. “Resisting” is taking to mean those force effects that are diminishing axial capacity, uplift, and lateral loading.

3.6 Loads and Load Factors for Construction

Unless otherwise specified, the load factor for construction loads and for any associated dynamic effects shall not be less than 1.5 in Strength I.

When investigating Strength Load Combinations I, III, and V during construction, load factors for the weight of the structure and appurtenances, *DC* and *DW*, shall not be taken to be less than 1.25 when investigating for maximized force effects. Strength IV investigations shall use the appropriate factors from LRFD-BDS Tables 3.4.1-1 and 3.4.1-2.

Where evaluation of construction deflections is required by the contract documents, Load Combination Service I shall apply. Construction dead loads shall be considered as part of the permanent load and construction transient loads considered part of the live load. The associated permitted deflections shall be included in the contract documents.

For falsework and formwork design loads, see *Standard Specifications* Section 6-02.3(17)A. The base construction temperature shall be taken as 64°F for the determination of Temperature Load.

3.7 Load Factors for Post-tensioning

3.7.1 Post-tensioning Effects from Superstructure

When cast-in-place, post-tensioned superstructure is constructed monolithic with the piers, the substructure design should consider frame moments and shears caused by elastic shortening and creep of the superstructure upon application of the axial post-tensioning force at the bridge ends. Frame moments and shears thus obtained should be added algebraically to the values obtained from the primary and secondary moment diagrams applied to the superstructure.

When cast-in-place or precast, post-tensioned superstructure are supported on sliding bearings at some of the piers, the design of those piers should include the longitudinal force from friction on the bearings generated as the superstructure shortens during jacking. When post-tensioning is complete, the full permanent reaction from this effect should be included in the governing AASHTO load combinations for the pier under design.

3.7.2 Secondary Forces from Post-tensioning, PS

The application of post-tensioning forces on a continuous structure produces reactions at the structure's support and internal forces that are collectively called secondary forces.

Secondary prestressing forces (i.e. secondary moments) are the force effects in continuous members, as a result of continuous post-tensioning. In frame analysis software, the secondary moments are generally obtained by subtracting the primary moment (P^*e) from the total PS moment obtained by applying an equivalent static load which represents the forces due to post-tensioning. A load factor, γ_{PS}, of 1.0 is appropriate for the superstructure. For fixed columns a 50 percent reduction in PS force effects could be used given the elasto-plastic characteristics of the soil surrounding the foundation elements.

3.8 Permanent Loads

The design unit weights of common permanent loads are provided in Table 3.8-1.

Table 3.8-1 Permanent Loads

Item	Load
Precast Pre-tensioned or Post-tensioned Spliced Girders including 10 lb/ft^3 allowance for reinforcement	165 lb/ft^3
All Other Normal-Weight Reinforced Concrete including 5 lb/ft^3 allowance for reinforcement	155 lb/ft^3
Unreinforced Concrete	145 lb/ft^3
Concrete Overlay	150 lb/ ft^3
Lightweight or specified density concrete without allowance for reinforcement	110-135 lb/ft^3
Stay-in-Place Form for Box Girder (applied to slab area less overhangs and webs)	5 lb/ft^2
Traffic Barrier (32″ – F Shape) (Normal weight concrete)	460 lb/ft
Traffic Barrier (42″ – F Shape) (Normal weight concrete)	710 lb/ft
Traffic Barrier (34″ – Single Slope) (Normal weight concrete)	490 lb/ft
Traffic Barrier (42″ – Single Slope) (Normal weight concrete)	670 lb/ft
Wearing Surface – Hot Mix Asphalt (HMA)/Asphalt Concrete Pavement (ACP)	140 lb/ft^3
Soil, Compact	125 lb/ft^3

For lightweight concrete barrier, multiply the normal weight concrete barrier weight from Table 3.8-1 by the ratio of the actual material weight to the unit weight of normal weight concrete (155 lb/ft^3).

3.8.1 Deck Overlay Requirement

Vehicular traffic will generate wear and rutting on a concrete bridge deck over the life of a bridge. One option to correct excessive wear is to add a Hot Mix Asphalt (HMA) overlay on top of the existing concrete deck. This type of overlay requires less construction time and is less expensive compared to removing a portion of the deck and adding a modified concrete overlay. The initial bridge design needs to incorporate the future overlay dead load. All new bridge designs with a concrete driving surface, excluding modified concrete overlays, shall be designed for a 35 psf future wearing surface load. The future wearing surface load does not apply to girder deflection, "A" dimension, creep, or profile grade calculations.

Concrete bridge deck protection systems shall be in accordance with Section 5.7.4 for new bridge construction and widening projects.

3.8.2 Distribution of Permanent Loads

The dead load of one traffic barrier is divided uniformly among the three nearest girders. When there are six or fewer girders, traffic barrier loads are equally distributed to all girders.

Sidewalk loads are distributed by the same method as traffic barrier loads. However, if a wide sidewalk is directly supported by more than three girders, the sidewalk load shall be distributed equally to all supporting girders.

3.9 Live Loads

3.9.1 Design Live Load

Live load design criteria are specified in the lower right corner of the bridge preliminary plan sheet. The Bridge Preliminary Plan Engineer determines the criteria using the following guideline:

- New bridges and bridge widening with addition of substructure – HL-93
- Bridge superstructure widening with no addition of substructure – Live load criteria of the original design
- Temporary widening of existing bridges: Live load criteria of the existing bridge
- Detour and other temporary bridges, except as required by Section 10.13.2 – 75 percent of HL-93

The application of design vehicular live loads shall be as specified in AASHTO LRFD 3.6.1.3. The design tandem, or "low boy", defined in LRFD-BDS C3.6.1.3.1 shall be included in the design vehicular live load.

The effect of one design tandem combined with the effect of the design lane load specified in AASTHO LRFD 3.6.1.2.4 and, for negative moment between the points of contraflexure under a uniform load on all spans and reactions at interior supports, shall be investigated a dual design tandem spaced from 26.0 feet to 40.0 feet apart, measured between the trailing axle of the lead vehicle and the lead axle of the trailing vehicle, combined with the design lane load. For the purpose of this article, the pairs of the design tandem shall be placed in adjacent spans in such position to produce maximum force effect. Axles of the design tandem that do not contribute to the extreme force effect under consideration shall be neglected.

3.9.2 Loading for Live Load Deflection Evaluation

The loading for live load deflection criteria is defined in LRFD-BDS 3.6.1.3.2. Live load deflections for the Service I limit state shall satisfy the requirements of LRFD-BDS 2.5.2.6.2.

3.9.3 Distribution to Superstructure

3.9.3.A Multi Girder Superstructure

The live load distribution factor for exterior girder of multi girder bridges designated in LRFD-BDS Table 4.6.2.2.1-1 as type a, b, c, e, k and also i, j if sufficiently connected to act as a unit, shall be as follows:

- For exterior girder design with slab cantilever length equal or less than 40 percent of the adjacent interior girder spacing, use the live load distribution factor for interior girder. The slab cantilever length is defined as the distance from the centerline of the exterior girder to the edge of the slab.
- For exterior girder design with slab cantilever length exceeding 40 percent of the adjacent interior girder spacing, use the lever rule with the multiple presence factor of 1.0 for single lane to determine the live load distribution. The live load used to design the exterior girder shall not be less than the live load used for the adjacent interior girder.

- The special analysis based on the conventional approximation of loads on piles as described in LRFD-BDS C4.6.2.2.2d shall not be used unless the effectiveness of diaphragms on the lateral distribution of truck load is investigated. In accordance with the LRFD-BDS Bridge Design Specifications, 7th Edition, 2014 and later, the special analysis is only applicable to steel beam-slab bridge cross-sections with diaphragms or cross-frames.

3.9.3.B Concrete Box Girders

The load distribution factor for multi-cell cast in place concrete box girders shall be for interior girders from LRFD-BDS Table 4.6.2.2.2b-1 for bending moment, and Table 4.6.2.2.3a-1 for shear. The live load distribution factor for interior girders shall then be multiplied by the number of webs to obtain the design live load for the entire superstructure. The live load distribution need not exceed the total number of design lanes. The correction factor for live load distribution for skewed support as specified in LRFD-BDS Table 4.6.2.2.2e-1 for bending moment and AASTHO LRFD Table 4.6.2.2.3c-1 for shear shall apply.

$$DF = N_b \times Df_i \text{ Live load distribution factor for multi-cell box girder} \quad (3.9.4\text{-}1)$$

Where:

Df_i = Live load distribution factor for interior web
N_b = Number of webs

3.9.3.C Multiple Presence Factors

A reduction factor will be applied in the substructure design for multiple lane loadings in accordance with LRFD-BDS 3.6.1.1.2.

3.9.3.D Distribution to Substructure

The number of traffic lanes to be used in the substructure design shall be determined by dividing the entire roadway slab width by 12. No fractional lanes shall be used. Roadway slab widths of less than 24 feet shall have a maximum of two design lanes.

3.9.3.E Distribution to Crossbeam

The design and load rating live loading are distributed to the substructure by placing wheel line reactions in lane configurations that generate the maximum force effects in the substructure. A wheel line reaction is one-half of the reaction of a single lane of live load. For integral and hinged continuity diaphragms, live loads are considered to act directly on the substructure without further distribution through the superstructure as illustrated in Figure 3.9-1. For girder configurations where there is a clear load path through the girders to the cross beam, such as at expansion piers with girders supported on individual bearings, live load reactions are applied through the bearings. Normally, substructure design will not consider live load torsion or lateral distribution. Sidesway effects shall be considered.

Figure 3.9-1 Live Load Distribution to Substructure

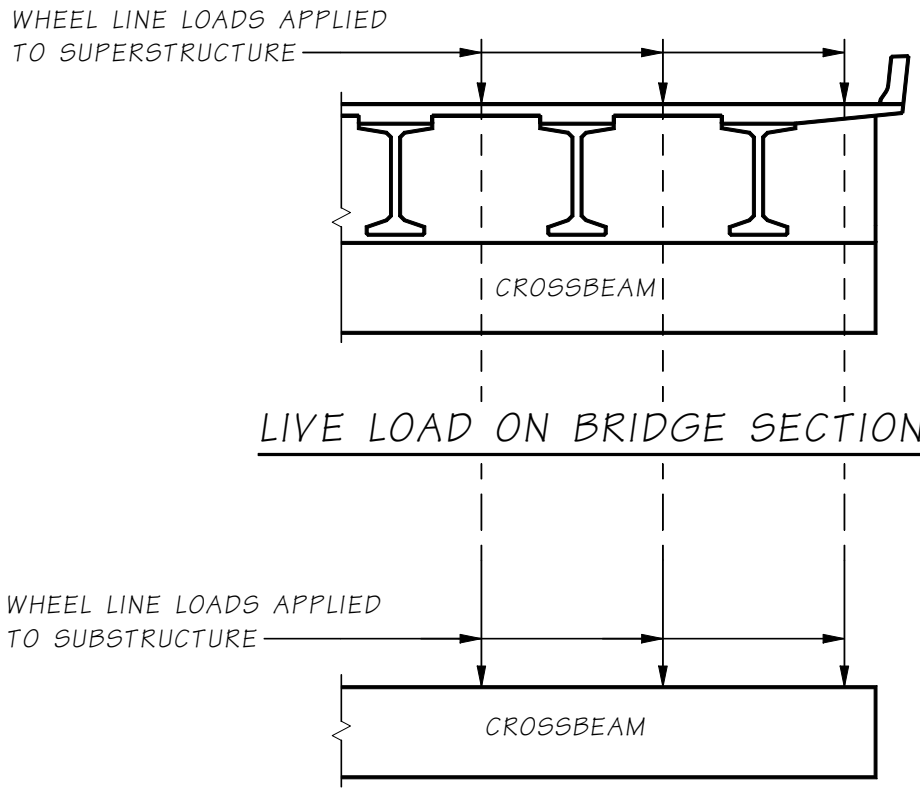

For steel and prestressed concrete superstructure where the live load is transferred to substructure through bearings, cross frames or diaphragms, the girder reaction may be used for substructure design. Live load placement is dependent on the member under design. Some examples of live load placement are as follows: the exterior vehicle wheel is placed 2 feet from the curb for maximum crossbeam cantilever moment or maximum eccentric foundation moment.

For crossbeam design between supports, the lanes are placed to obtain the maximum positive moment in the member; then re-located to obtain the maximum shear or negative moment in the member.

For column design, the design lanes are placed to obtain the maximum transverse moment at the top of the column; then re-located to obtain the maximum axial force of the column.

3.9.4 Bridge Load Rating

Bridge designers are responsible for Design, Legal, and Permit load rating of new bridges in accordance with the National Bridge Inspection Standards (NBIS) and the AASHTO *Manual Bridge Evaluation*. See Chapter 13 for detailed information on loading requirements for bridge load rating.

3.10 Pedestrian Loads

Pedestrian bridges shall be designed in accordance with the requirements of the AASHTO *LFRD Guide Specifications for the Design of Pedestrian Bridges*, dated December 2009.

Seismic design of pedestrian bridges shall be performed in accordance with the requirements of the AASHTO SEISMIC.

Pedestrian live load on vehicular bridge shall be as specified in LRFD 3.6.1.6.

Pedestrian live loads on sidewalks shall be distributed to the same girders as the sidewalk dead load.

3.11 Wind Loads

3.11.1 Wind Load to Superstructure

For the usual girder and slab bridges having individual span length of not more than 150 ft and a maximum height of 33 feet above low ground or water level, the following simplified wind pressure on structure (*WS*), could be used in lieu of the general method described in LRFD-BDS 3.8.1.2:

Table 3.11.1-1 Wind Pressure (kip per square foot)

Limit State	Wind Exposure Category					
	B		C		D	
	Transverse	Longitudinal	Transverse	Longitudinal	Transverse	Longitudinal
Strength III	0.029	0.007	0.040	0.010	0.046	0.012
Strength V	0.021	0.005	0.021	0.005	0.021	0.005
Service I	0.016	0.004	0.016	0.004	0.016	0.004
Service IV	0.016	0.004	0.023	0.006	0.026	0.007

Both forces shall be applied simultaneously.

For the usual girder and slab bridges having individual span length of not more than 150 feet and a maximum height of 33 feet above low ground or water level, the following simplified wind pressure on vehicle (*WL*), could be used in lieu of the general method described in LRFD-BDS 3.8.1.3:

- 0.10 kip per linear foot, transverse
- 0.04 kip per linear foot, longitudinal

Both forces shall be applied simultaneously.

3.11.2 Wind Load to Substructure

Wind forces shall be applied to the substructure units in accordance with the loadings specified in LRFD-BDS. Transverse stiffness of the superstructure may be considered, as necessary, to properly distribute loads to the substructure provided that the superstructure can sustain such loads. Vertical wind pressure, per LRFD-BDS 3.8.2, shall be included in the design where appropriate, for example, on single column piers. Wind loads shall be applied through shear keys or other positive means from the superstructure to the substructure.

Wind loads shall be distributed to the piers and abutments in accordance with the laws of statics. Transverse wind loads can be applied directly to the piers assuming the superstructure to act as a rigid beam. For large structures a more appropriate result might be obtained by considering the superstructure to act as a flexible beam on elastic supports.

3.11.3 Wind on Noise Walls

Wind on Noise Walls shall be as specified in LRFD-BDS 3.8.1, 3.8.1.2.4, and 15.8.2.

3.12 Loads on Buried Structures

Loads, live load distribution, and seismic design of buried structures shall be in accordance with the requirements of Section 8.3.

3.13 Earthquake Effects

Earthquake loads see Chapter 4.

3.14 Substructure, Scour and Earth Pressure

For substructure, scour, and earth pressure loads see Chapter 7.

3.15 Force Effects Due to Superimposed Deformations

PS, *CR*, *SH*, *TU* and *TG* are superimposed deformations. Load factors for *PS*, *CR*, and *SH*, are as shown in Table 3.5-3. In non-segmental structures: *PS*, *CR*, and *SH* are symbolically factored by a value of 1.0 in the strength limit state but are actually designed for in the service limit state. For substructure in the strength limit state, the value of 0.50 for γ_{PS}, γ_{CR}, γ_{SH}, and γ_{TU} may be used when calculating force effects in non-segmental structures, but shall be taken in conjunction with the gross moment of inertia in the columns or piers. The larger of the values provided for load factor of *TU* shall be used for deformations and the smaller values for all other effects. The calculation of displacements for *TU* loads utilizes a factor greater than 1.0 to avoid under sizing joints, expansion devices, and bearings.

The current LRFD-BDS requires a load factor of 1.2 on *CR*, *SH*, and *TU* deformations, and 0.5 on other *CR/SH/TU* force effects. The lower value had been rationalized as dissipation of these force effects over time, particularly in the columns and piers.

Changing the load factors for creep and shrinkage is not straight-forward because *CR*, *SH* are "superimposed deformations", that is, force effects due to a change in material behavior that cause a change in the statical system. For safety and simplicity in design, they are treated as loads--despite not being measurable at time $t = 0$. However, behavior is nonlinear and application of the load factor must also be considered. Some software will run service load analysis twice: once with and once without *CR*, *SH* effects. The *CR* and *SH* can then be isolated by subtracting the results of the two runs. Other software will couple the *CR* and *SH* with the dead load, giving a shrinkage- or creep-adjusted dead load.

The proposed compromise is to assign creep and shrinkage the same load factor as the *DC* loads but permit a factor of 1.0 if the project-specific creep coefficient can be determined and is then used in the linear analysis software.

Thermal and shrinkage loadings are induced by movements of the structure and can result from several sources. Movements due to temperature changes are calculated using coefficients of thermal expansion of 0.000006 feet/foot per degree for concrete and 0.0000065 feet/foot per degree for steel. Reinforced concrete shrinks at the rate of 0.0002 feet/foot.

3.16 Other Loads

3.16.1 Buoyancy

The effects of submergence of a portion of the substructure are to be calculated, both for designing piling for uplift and for realizing economy in footing design.

3.16.2 Collision Force on Bridge Substructure

See LRFD-BDS 3.6.5 and 3.14

3.16.3 Collision Force on Traffic Barrier

See LRFD-BDS 3.6.5.1

3.16.4 Force from Stream Current, Floating Ice, and Drift

See LRFD-BDS 3.9

3.16.5 Ice Load

In accordance with WSDOT HQ Hydraulics Office criteria, an ice thickness of 12″ shall be used for stream flow forces on piers throughout Washington State.

3.16.6 Uniform Temperature Load

The design thermal movement associated with a uniform temperature change may be calculated using the ranges of temperature as specified herein. The temperature ranges shown below reflect the difference between the extended lower and upper boundary to be used to calculate thermal deformation effects.

- Concrete Bridges (All Regions): 0° to 100°
- Steel Bridges (Eastern Washington): −30° to 120°
- Steel Bridges (Western Washington): 0° to 120°

3.16.7 Vehicular Collision Force: CT

Abutments and piers located within the clear zone as defined by the AASHTO *Roadside Design Guide* shall be investigated for collision. Collision shall be addressed by either providing structural resistance or by redirecting or absorbing the collision load. The provisions of LRFD-BDS 2.3.2.2.1 shall apply as appropriate.

Where the design choice is to provide structural resistance, the pier or abutment shall be designed for an equivalent static force of 600 kip, which is assumed to act in a direction between 0 and 15 degrees with the edge of the pavement in a horizontal plane, between 2.0 and 5.0 ft above the ground, whichever produces the critical shear or moment in the pier component and the connections to the foundation or pier cap.

Each of the following substructure components are considered to have adequate structural resistance to bridge collapse due to vehicular impacts:

1. Substructure components that are backed by soil (e.g., abutments).
2. Reinforced concrete pier components that are at least 3.0-ft thick and have a concrete cross-sectional area greater than 30.0 ft^2 as measured in the horizontal plane at all elevations from the top of the pier foundation to a height of at least 5.0 ft above the grade.

3. Pier systems with three or more columns where the designer shows by calculation that the superstructure will not collapse with one column missing when subjected to the full dead load with a 1.1 load factor and the live load in the permanent travel lanes with a load factor of 1.0.
4. Piers supporting a bridge superstructure where it is shown by calculation that the superstructure will not collapse with one column missing when subjected to the full dead load with a 1.1 load factor and the live load in the permanent travel lanes with a load factor of 1.0.
5. Pier walls and multi-column piers with struts between columns that have been designed and detailed as longitudinal traffic barriers according to Section 13.

Where the design choice is to redirect or absorb the collision load, protection shall consist of one of the following:

- For new or retrofit construction, a minimum 42.0-in. high crash tested rigid TL-5 barrier, as specified in LRFD-BDS Section 13, located such that the top edge of the traffic face of the barrier is 3.25 ft or more from the face of the pier component being protected. Provide a minimum of 60-ft of TL-5 barrier in advance of the leading pier component.
- For retrofit construction, a minimum 42.0-in. high crash tested rigid TL-5 barrier may be placed closer than 3.25 ft from the top edge of the traffic face of the barrier to the nearest traffic face of the pier component being protected when there is no other practical option. Such rigid barriers shall be structurally and geometrically capable of surviving the crash test as specified in LRFD-BDS Section 13. Provide a minimum of 60-ft of TL-5 barrier in advance of the leading pier component.

3.16.8 Bridges Subjected to Tsunami Effects

The AASHTO *Guide Specifications for Bridges Subject to Tsunami Effects* are intended for the design and construction of conventional bridges to resist the effects of tsunami waves. The conventional bridges are taken as those that:

- Have slab, beam, or box girder superstructures
- Are supported by pier and abutment substructures
- Are founded on shallow or deep foundations
- Have minimal changes in elevation along the bridge length
- Are straight in plan view (including skewed but not curved)

The tsunami design requirements for non-conventional bridges shall be considered on a case-by-case basis and consultation with the Bridge and Structures Office.

Determination of whether the tsunami hazard applies shall be made at the bridge preliminary plan or conceptual plan stage using the above-mentioned tools and shall be noted in the Job File. Bridge preliminary plan or conceptual plan shall specify the most probably bridge soffit elevation and superstructure depth, and substructure/foundation type for tsunami hazard determination.

Where possible, all new bridges shall be designed so that the tsunami wave does not contact the superstructure. If this is not possible the bridge shall be designed to ensure that the bridge can resist the tsunami hazard loading as specified in the AASHTO *Guide Specifications for Bridges Subject to Tsunami Effects*.

A bridge superstructure shall be considered for the tsunami hazard if the inundation at Mean High Water (MHW) is high enough to contact the bridge superstructure soffit based on the modeled inundation depth. Substructure design should consider loading applied through the superstructure and loads applied directly to the substructure. Both scour and geotechnical hazards due to tsunami inundation shall be investigated during final design.

The critical tsunami parameters including wave direction, velocity and depth, can be obtained from the Washington State Department of Natural Resources (DNR), at: Tsunami Hazard Maps - WA.

The performance requirement for bridges subjected to tsunami effects is life safety no-collapse as defined in Chapter 4 for seismic performance requirement. Higher performance for post-tsunami serviceability may be considered on a case-by-case basis for recovery bridges as defined in Chapter 4.

Simultaneous consideration of tsunami and seismic, or tsunami and scour are not recommended tsunami design of conventional bridges.

The provisions outlined in Section 7 of the AASHTO *Guide Specifications for Bridges Subject to Tsunami Effects* for reduction of tsunami loading, accommodation of forces, geometric proportioning, venting, and sacrificial elements could be used with the approval of the Bridge Design Engineer regardless of the contracting method.

3.99 References

1. AASHTO LRFD Bridge Design Specifications, 9th Edition, November 2020.
2. AASHTO Guide Specifications for Bridges Subjected to Tsunami Effects, 1st Edition, January 2022.

Chapter 4 Seismic Design and Retrofit Contents

4.1 General 4-1

4.1.1 Expected Bridge Seismic Performance 4-2

4.1.2 Expected Post-earthquake Service Levels 4-2

4.1.3 Expected Post-earthquake Damage States 4-3

4.2 WSDOT Additions and Modifications to AASHTO *Guide Specifications for LRFD Seismic Bridge Design* (SEISMIC) 4-4

4.2.1 Definitions 4-4

4.2.2 Earthquake Resisting Systems (ERS) Requirements for Seismic Design Categories (SDCs) C and D 4-4

4.2.3 Seismic Ground Shaking Hazard 4-9

4.2.3.A Site Coefficients 4-10

4.2.4 Selection of Seismic Design Category (SDC) 4-10

4.2.5 Temporary and Staged Construction 4-11

4.2.6 Load and Resistance Factors 4-11

4.2.7 Balanced Stiffness Requirements and Balanced Frame Geometry Recommendation 4-11

4.2.8 Selection of Analysis Procedure to Determine Seismic Demand 4-11

4.2.9 Member Ductility Requirement for SDCs C and D 4-11

4.2.10 Longitudinal Restrainers 4-11

4.2.11 Abutments 4-12

4.2.12 Foundation – General 4-16

4.2.13 Foundation – Spread Footing 4-16

4.2.14 Procedure 3: Nonlinear Time History Method 4-16

4.2.15 I_{eff} for Box Girder Superstructure 4-16

4.2.16 Foundation Rocking 4-16

4.2.17 Drilled Shafts 4-16

4.2.18 Longitudinal Direction Requirements 4-17

4.2.19 Liquefaction Design Requirements 4-17

4.2.20 Reinforcing Steel 4-17

4.2.21 Concrete Modeling 4-18

4.2.22 Expected Nominal Moment Capacity 4-18

4.2.23 Interlocking Bar Size 4-18

4.2.24 Splicing of Longitudinal Reinforcement in Columns Subject to Ductility Demands for SDCs C and D 4-18

4.2.25 Development Length for Column Bars Extended into Oversized Pile Shafts f or SDCs C and D 4-18

4.2.26 Lateral Confinement for Oversized Pile Shaft for SDCs C and D 4-18

4.2.27 Lateral Confinement for Non-Oversized Strengthened Pile Shaft for SDCs C and D 4-18

4.2.28 Requirements for Capacity Protected Members 4-19
4.2.29 Superstructure Capacity Design for Transverse Direction (Integral Bent Cap) for SDCs C and D 4-19
4.2.30 Superstructure Design for Non Integral Bent Caps for SDCs B, C, and D 4-19
4.2.31 Joint Proportioning 4-19
4.2.32 Cast-in-Place and Precast Concrete Piles 4-20
4.2.33 Seismic Resiliency using Innovative Materials and Construction 4-20

4.3 Seismic Design Requirements for Bridge Modifications and Widening Projects 4-21
4.3.1 General 4-21
4.3.2 Bridge Widening Project Classification 4-21
4.3.2.A Minor Modification and Widening Projects 4-21
4.3.2.B Major Modifications and Widening Projects 4-21
4.3.3 Seismic Design Requirements Bridge Widening Projects 4-22
4.3.4 Scoping for Bridge Widening and Liquefaction Mitigation. 4-24
4.3.5 Design and Detailing Considerations 4-24

4.4 Seismic Retrofitting of Existing Ordinary Bridges 4-26
4.4.1 Seismic Analysis Requirements 4-26
4.4.2 Seismic Retrofit Design. 4-27
4.4.3 Computer Analysis Verification 4-27
4.4.4 Earthquake Restrainers 4-27
4.4.5 Isolation Bearings 4-27

4.5 Seismic Design Requirements for Retaining Walls and Buried Structure 4-28
4.5.1 Seismic Design of Retaining Walls 4-28
4.5.2 Seismic Design of Buried Structure 4-28

4.99 References 4-29

Chapter 4 Seismic Design and Retrofit

4.1 General

Seismic design of new bridges and bridge widenings shall conform to LRFD-SGS as modified by Sections 4.2 and 4.3.

Analysis and design of seismic retrofits for existing bridges shall be completed in accordance with Section 4.4. Seismic design of retaining walls shall be in accordance with Section 4.5. For nonconventional bridges, bridges that are deemed critical or Recovery, or bridges that fall outside the scope of the Guide Specifications for any other reasons, project specific design requirements shall be developed and submitted to the WSDOT Bridge Design Engineer for approval.

The importance classifications for all highway bridges in Washington State are classified as "Ordinary" except for special major bridges. Special major bridges fitting the classifications of either "Critical" or "Recovery" will be so designated by either the WSDOT Bridge and Structures Engineer or the WSDOT Bridge Design Engineer.

Bridges are considered as Critical, Recovery, or Ordinary for their operational classification as described below. Two-level performance criteria are required for design of Recovery and Critical bridges. Recovery and Critical bridges shall be designated by WSDOT Regions or Local Agencies, in consultation with WSDOT State Bridge and Structures Engineer and State Bridge Design Engineer.

- **Critical Bridges**
  Critical bridges are expected to provide immediate access to emergency and similar life-safety facilities after an earthquake. The Critical designation is typically reserved for high-cost projects where WSDOT intends to protect the investment or for projects that would be especially costly to repair if they were damaged during an earthquake.
- **Recovery Bridges**
  Recovery bridges serve as vital links for rebuilding damaged areas and provide access to the public shortly after an earthquake.
- **Ordinary Bridges**
  All bridges not designated as either Critical or Recovery shall be designated as Ordinary.

4.1.1 Expected Bridge Seismic Performance

The seismic hazard evaluation level for designing bridges shall be in accordance with Table 4.1-1 for Safety Evaluation Earthquake (SEE) and/or Functional Evaluation Earthquake (FEE).

Table 4.1-1 Seismic Hazard Evaluation Levels and Expected Performance

Bridge Operational Importance Category	Seismic Hazard Evaluation Level	Expected Post Earthquake Damage State	Expected Post Earthquake Service Level
"Ordinary Bridges" – Eastern Washington	SEE	Significant	No Service
"Ordinary Bridges" – Western Washington (Not Lifeline)	SEE	Significant	No Service
	FEE	Minimal	Full Service
"Recovery Bridges" (Lifeline)	SEE	Moderate	Limited Service
	FEE	Minimal	Full Service
"Critical Bridges"	SEE	Minimal to Moderate	Limited Service
	FEE	None to Minimal	Full Service

4.1.2 Expected Post-earthquake Service Levels

- **No Service** – Bridge is closed for repair or replacement.
- **Limited Service** – Bridge is open for emergency vehicle traffic: A reduced number of lanes for Ordinary traffic is available within three months of the earthquake; Vehicle weight restriction may be imposed until repairs are completed. It is expected that within three months (Recovery Bridges) or within three days (Critical Bridges) of the earthquake, repair works on a damaged bridge would have reached the stage that would permit Ordinary traffic on at least some portion of the bridge.
- **Full Service** – Full access to Ordinary traffic is available almost immediately after the earthquake. The expected post-earthquake damage states and service levels of Critical bridges are included in Table 4.1-2 to provide an indication of their expected performance relative to Ordinary bridge categories.

Table 4.1-2 Displacement Ductility Demand Values, μ_D

Seismic Critical Member	Displacement Ductility Demand Limits						
	Ordinary Bridges • EW • SEE	Ordinary Bridges – WW (Not Lifeline)		Recovery Bridges (Lifeline)		Critical Bridges	
		SEE	FEE	SEE	FEE	SEE	FEE
Wall Type Pier in Weak Direction	5.0	5.0	1.5	2.5	1.5	1.5	1.0
Wall Type Pier in Strong Direction	1.0	1.0	1.0	1.0	1.0	1.0	1.0
Single Column Bent	5.0	5.0	1.5	2.5	1.5	1.5	1.0
Multiple Column Bent	6.0	6.0	2.0	3.5	2.0	1.5	1.0
Pile/Shaft-Column with Plastic Hinge at Top of Column	5.0	5.0	2.0	3.5	2.0	1.5	1.0
Pile/Shaft-Column with Plastic Hinge Below Ground	4.0	4.0	1.5	2.5	1.5	1.5	1.0
Superstructure	1.0	1.0	1.0	1.0	1.0	1.0	1.0

4.1.3 Expected Post-earthquake Damage States

- **Significant** – "imminent failure," i.e., onset of compressive failure of core concrete. Bridge replacement is likely. All plastic hinges within the structure have formed with ductility demand values approaching the limits specified in Table 4.1-2.
- **Moderate** – "extensive cracks and spalling, and visible lateral and/or longitudinal reinforcing bars". Bridge repair is likely but bridge replacement is unlikely
- **Minimal** – "flexural cracks and minor spalling and possible shear cracks". Essentially elastic performance
- **None** – No damage

The Design Spectrum for Safety Evaluation Earthquake (SEE) shall be taken as a spectrum based on a 7% probability of exceedance in 75 years (or approximate 1000-year return period). BDM Section 4.2.3 provides the ground motion software tool *SPECTRA* to develop spectral response parameters.

The Design Spectrum for Functional Evaluation Earthquake (FEE) shall be taken as a spectrum based on a 30% probability of exceedance in 75 years (or 210-year return period). The Geotechnical Engineer shall provide final design spectrum recommendations. The FEE may be obtained using the USGS Interactive website (https://earthquake.usgs.gov/hazards/interactive).

Ordinary and Recovery bridges subjected to the seismic hazard levels specified in Table 1 shall satisfy the displacement criteria specified in LRFD-SGS as applicable and the maximum displacement ductility demand, μ_D values as specified in Table 4.1-2.

4.2 WSDOT Additions and Modifications to AASHTO *Guide Specifications for LRFD Seismic Bridge Design* (SEISMIC)

WSDOT amendments to the LRFD-SGS are as follows:

4.2.1 Definitions

LRFD-SGS Article 2.1 – Add the following definitions:

- **Oversized Pile Shaft –** A drilled shaft foundation that is larger in diameter than the supported column and has a reinforcing cage larger than and independent of the columns. The size of the shaft shall be in accordance with Section 7.8.2.
- **Owner –** Person or agency having jurisdiction over the bridge. For WSDOT projects, regardless of delivery method, the term "Owner" in these Guide Specifications shall be the WSDOT State Bridge Design Engineer or/and the WSDOT State Geotechnical Engineer.

4.2.2 Earthquake Resisting Systems (ERS) Requirements for Seismic Design Categories (SDCs) C and D

LRFD-SGS Article 3.3 – WSDOT Global Seismic Design Strategies:

- **Type 1 –** Ductile Substructure with Essentially Elastic Superstructure. This category is permissible.
- **Type 2 –** Essentially Elastic Substructure with a Ductile Superstructure. This category is not permissible.
- **Type 3 –** Elastic Superstructure and Substructure with a Fusing Mechanism between the two. This category is permissible with WSDOT State Bridge Design Engineer's approval.

With the approval of the State Bridge Design Engineer, for Type 1 ERS for SDC C or D, if columns or pier walls are considered an integral part of the energy dissipating system but remain elastic at the demand displacement, the forces to use for capacity design of other components are to be a minimum of 1.2 times the elastic forces resulting from the demand displacement in lieu of the forces obtained from overstrength plastic hinging analysis. Because maximum limiting inertial forces provided by yielding elements acting at a plastic mechanism level is not effective in the case of elastic design, the following constraints are imposed. These may be relaxed on a case by case basis with the approval of the State Bridge Design Engineer.

1. Unless an analysis that considers redistribution of internal structure forces due to inelastic action is performed, all substructure units of the frame under consideration and of any adjacent frames that may transfer inertial forces to the frame in question must remain elastic at the design ground motion demand.
2. Effective member section properties must be consistent with the force levels expected within the bridge system. Reinforced concrete columns and pier walls should be analyzed using cracked section properties. For this purpose, in absence of better information or estimated by Figure 5.6.2-1, a moment of inertia equal to one half that of the un-cracked section shall be used.

3. Foundation modeling must be established such that uncertainties in modeling will not cause the internal forces of any elements under consideration to increase by more than 10 percent.
4. When site specific ground response analysis is performed, the response spectrum ordinates must be selected such that uncertainties will not cause the internal forces of any elements under consideration to increase by more than 10 percent.
5. Thermal, shrinkage, prestress or other forces that may be present in the structure at the time of an earthquake must be considered to act in a sense that is least favorable to the seismic load combination under investigation.
6. P-Delta effects must be assessed using the resistance of the frame in question at the deflection caused by the design ground motion.
7. Joint shear effects must be assessed with a minimum of the calculated elastic internal forces applied to the joint.
8. Detailing as normally required in either SDC C or D, as appropriate, must be provided.

It is permitted to use expected material strengths for the determination of member strengths except shear for elastic response of members.

The use of elastic design in lieu of overstrength plastic hinging forces for capacity protection described above shall only be considered if designer demonstrates that capacity design of Article 4.11 of the AASHTO *Guide Specifications for LRFD Bridge Seismic Design* is not feasible due to geotechnical or structural reasons.

If the columns or pier walls remain elastic at the demand displacement, shear design of columns or pier walls shall be based on 1.2 times elastic shear force resulting from the demand displacement and normal material strength shall be used for capacities. The minimum detailing according to the bridge seismic design category shall be provided.

Type 3 ERS may be considered only if Type 1 strategy is not suitable and Type 3 strategy has been deemed necessary for accommodating seismic loads. Use of isolation bearings needs the approval of WSDOT State Bridge Design Engineer. Isolation bearings shall be designed per the requirement specified in Section 9.3

Limitations on the use of ERS and ERE are shown in Figures 3.3-1a, 3.3-1b, 3.3-2, and 3.3-3.

- Figure 3.3-1b Type 6, connection with moment reducing detail should only be used at column base if proved necessary for foundation design. Fixed connection at base of column remains the preferred option for WSDOT bridges.
- The design criteria for column base with moment reducing detail shall consider all applicable loads at service, strength, and extreme event limit states.
- Figure 3.3-2 Types 6 and 8 are not permissible for non-liquefied configuration and permissible with WSDOT State Bridge Design Engineer's approval for liquefied configuration.

For ERSs and EREs requiring approval, the WSDOT State Bridge Design Engineer's approval is required regardless of contracting method (i.e., approval authority is not transferred to other entities).

BDM Figure 4.2.2-1 Figure 3.3-1a Permissible Earthquake-Resisting Systems (ERSs)

Longitudinal Response

1

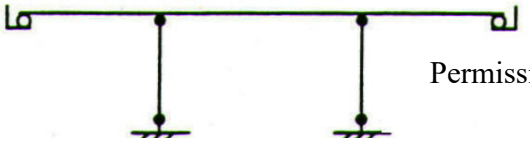

Permissible

- Plastic hinges in inspectable locations or elastic design of columns.
- Abutment resistance not required as part of ERS
- Knock-off backwalls permissible

Longitudinal Response

2

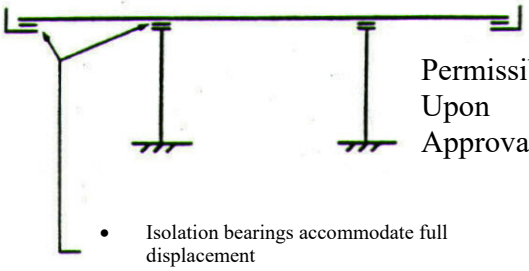

Permissible Upon Approval

- Isolation bearings accommodate full displacement
- Abutment not required as part of ERS

Transverse Response

3

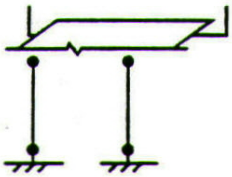

Permissible

- Plastic hinges in inspectable locations.
- Abutment not required in ERS, breakaway shear keys permissible with WSDOT Bridge Design Engineer's Approval

Transverse or Longitudinal Response

4



Permissible Upon Approval

- Plastic hinges in inspectable locations
- Isolation bearings with or without energy dissipaters to limit overall displacements

Transverse or Longitudinal Response

5



Permissible

- Abutment required to resist the design earthquake elastically
- Longitudinal passive soil pressure shall be less than 0.70 of the value obtained using the procedure given in BDM Article 4.2.11

Longitudinal Response

6

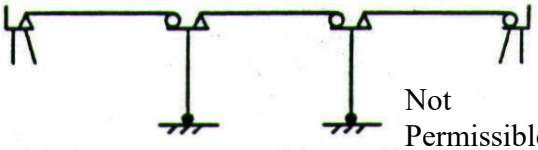

Not Permissible

- Multiple simply-supported spans with adequate support lengths
- Plastic hinges in inspectable locations or elastic design of columns

BDM Figure 4.2.2-2 Figure 3.3-1b Permissible Earthquake-Resisting Elements (EREs)

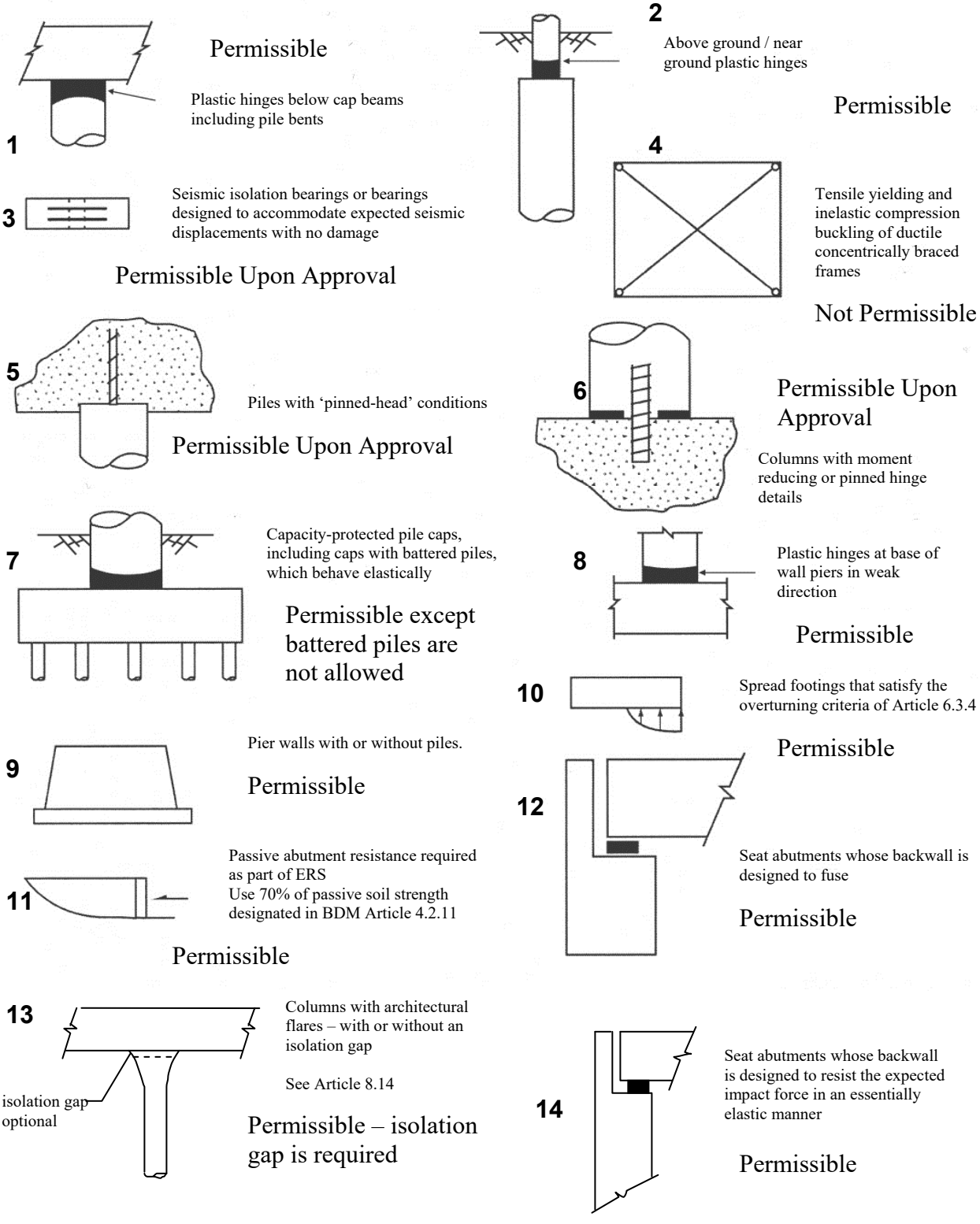

BDM Figure 4.2.2-3 Figure 3.3-2 Permissible Earthquake-Resisting Elements That Require Owner's Approval

1



Passive abutment resistance required as part of ERS Passive Strength
Use 100% of strength designated in Article 5.2.3

Not Permissible

2

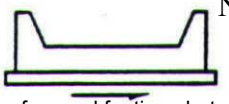

Not Permissible

Sliding of spread footing abutment allowed to limit force transferred

Limit movement to adjacent bent displacement capacity

3

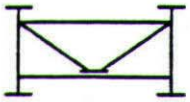

Ductile End-diaphragms in superstructure (Article 7.4.6)

Not Permissible

4

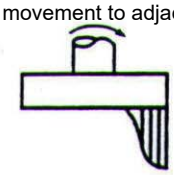

Not Permissible

Foundations permitted to rock

Use rocking criteria according to Appendix A

5

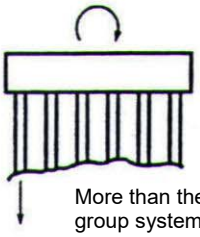

Not Permissible

More than the outer line of piles in group systems allowed to plunge or uplift under seismic loadings

6

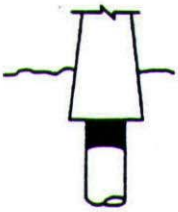

Wall piers on pile foundations that are not strong enough to force plastic hinging into the wall, and are not designed for the Design Earthquake elastic forces

Ensure Limited Ductility Response in Piles according to Article 4.7.1

Permissible Upon Approval for Liquefied Configuration

7

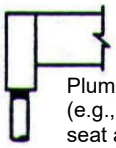

Not Permissible

Plumb piles that are not capacity-protected (e.g., integral abutment piles or pile-supported seat abutments that are not fused transversely)

Ensure Limited Ductility Response in Piles according to Article 4.7.1

8

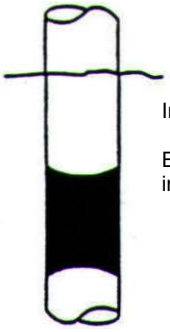

In-ground hinging in shafts or piles.

Ensure Limited Ductility Response in Piles according to Article 4.7.1

Permissible Upon Approval for Liquefied Configuration

9



Not Permissible

Batter pile systems in which the geotechnical capacities and/or in-ground hinging define the plastic mechanisms.

Ensure Limited Ductility Response in Piles according to Article 4.7.1

BDM Figure 4.2.2-4 Figure 3.3-3 Earthquake-Resisting Elements that Are Not Recommended for New Bridges

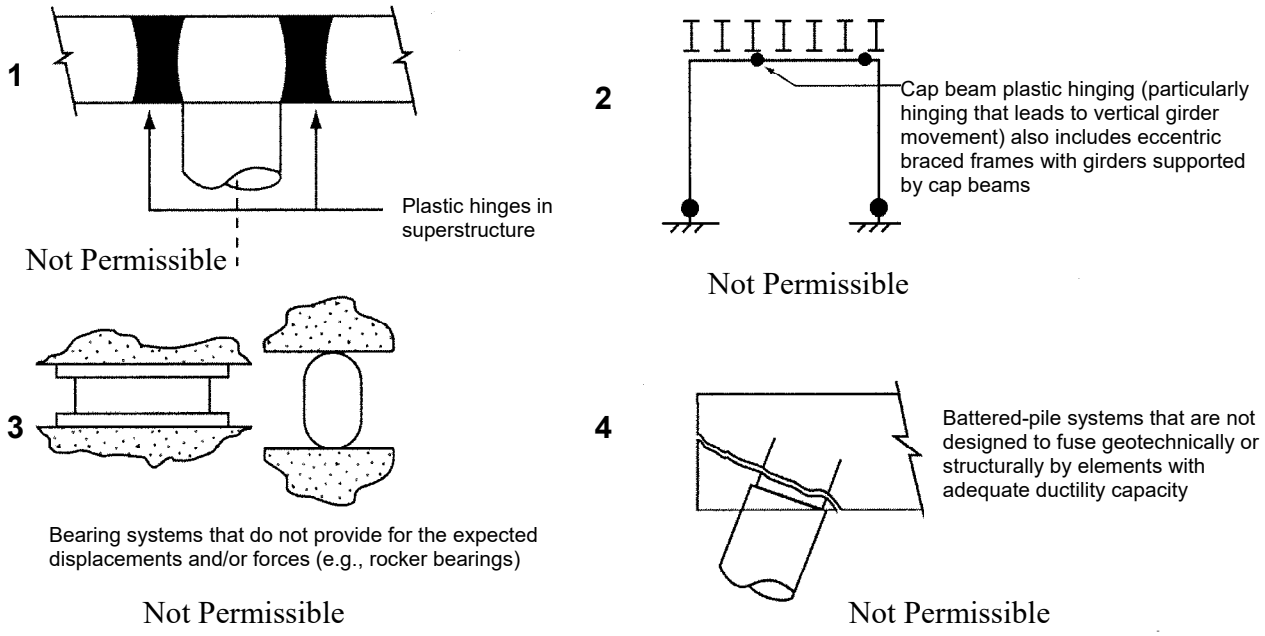

4.2.3 Seismic Ground Shaking Hazard

LRFD-SGS Article 3.4 – For bridges that are considered Critical, Recovery or Ordinary bridges with a site Class F, the seismic ground shaking hazard shall be determined based on the WSDOT State Geotechnical Engineer recommendations.

In cases where the site coefficients used to adjust mapped values of design ground motion for local conditions are inappropriate to determine the design spectra in accordance with general procedure of Article 3.4.1 (such as the period at the end of constant design spectral acceleration plateau (T_s) is greater than 1.0 second or the period at the beginning of constant design spectral acceleration plateau (T_o) is less than 0.2 second), a site-specific ground motion response analysis shall be performed.

In the general procedure, the spectral response parameters shall be determined using the most current version of the USGS 2014 Seismic Hazard Maps with Seven Percent Probability of Exceedance in 75 yr (approximate 1000-yr Return Period).

The Design Spectrum for Functional Evaluation Earthquake (FEE) shall be taken as a spectrum based on a 30% probability of exceedance in 75 years (or 210-year return period).

4.2.3.A Site Coefficients

The LRFD-SGS Article 3.4.2.3-Site Coefficients shall be modified as shown in Tables 4.2.3-1 A through C:

The site coefficients for peak ground acceleration, F_{pga}, short-period range F_a, and for long-period range F_v shall be taken as specified in the following Tables:

Table 4.2.3-1A Values of Site Coefficient, Fpga, for Peak Ground Acceleration

Site Class	Mapped Peak Ground Acceleration Coefficient (PGA)					
	PGA ≤ 0.10	PGA = 0.2	PGA = 0.3	PGA = 0.4	PGA = 0.5	PGA ≥ 0.6
A	0.8	0.8	0.8	0.8	0.8	0.8
B	0.9	0.9	0.9	0.9	0.9	0.9
C	1.3	1.2	1.2	1.2	1.2	1.2
D	1.6	1.4	1.3	1.2	1.1	1.1
E	2.4	1.9	1.6	1.4	1.2	1.1
F	*	*	*	*	*	*

Table 4.2.3-1B Values of Site Coefficient, F_a, for 0.2-sec Period Spectral Acceleration

Site Class	Mapped Spectral Acceleration Coefficient at Period 0.2 sec (S_s)					
	S_s ≤ 0.25	S_s = 0.50	S_s = 0.75	S_s = 1.00	S_s = 1.25	S_s ≥ 1.50
A	0.8	0.8	0.8	0.8	0.8	0.8
B	0.9	0.9	0.9	0.9	0.9	0.9
C	1.3	1.3	1.2	1.2	1.2	1.2
D	1.6	1.4	1.2	1.1	1.0	1.0
E	2.4	1.7	1.3	1.0	0.9	0.9
F	*	*	*	*	*	*

Table 4.Values of Site Coefficient, F_v, for 1.0-sec Period Spectral Acceleration

Site Class	Mapped Spectral Acceleration Coefficient at Period 1.0 sec (S_1)					
	S_1 ≤ 0.1	S_1 = 0.2	S_1 = 0.3	S_1 = 0.4	S_1 = 0.5	S_1 ≥ 0.6
A	0.8	0.8	0.8	0.8	0.8	0.8
B	0.8	0.8	0.8	0.8	0.8	0.8
C	1.5	1.5	1.5	1.5	1.5	1.4
D	2.4	2.2	2.0	1.9	1.8	1.7
E	4.2	3.3	2.8	2.4	2.2	2.0
F	*	*	*	*	*	*

*Site-specific response geotechnical investigation and dynamic site response analysis should be considered.

Note: Use straight line interpolation for intermediate values of *PGA*, S_s, and S_1.

4.2.4 Selection of Seismic Design Category (SDC)

LRFD-SGS Article 3.5 – Pushover analysis shall be used to determine displacement capacity for both SDCs C and D.

4.2.5 Temporary and Staged Construction

LRFD-SGS Article 3.6 – For bridges that are designed for a reduced seismic demand, the contract plans shall either include a statement that clearly indicates that the bridge was designed as temporary using a reduced seismic demand or show the Acceleration Response Spectrum (ARS) used for design. No liquefaction assessment required for temporary bridges. The design response spectra given in Article 3.4 may be reduced by a factor of not more than 2.5 to calculate the component elastic forces and displacements.

4.2.6 Load and Resistance Factors

LRFD-SGS Article 3.7 – Revise as follows:

Use load factors of 1.0 for all permanent loads. The load factor for live load shall be 0.0 when pushover analysis is used to determine the displacement capacity. Use live load factor of 0.5 for all other extreme event cases. Unless otherwise noted, all ϕ factors shall be taken as 1.0.

4.2.7 Balanced Stiffness Requirements and Balanced Frame Geometry Recommendation

LRFD-SGS Articles 4.1.2 and 4.1.3 – Balanced stiffness between bents within a frame and between columns within a bent and balanced frame geometry for adjacent frames are required for bridges in both SDCs C and D. Deviations from balanced stiffness and balanced frame geometry requirements require approval from the WSDOT Bridge Design Engineer.

4.2.8 Selection of Analysis Procedure to Determine Seismic Demand

LRFD-SGS Article 4.2 – Analysis Procedures:

- Procedure 1 (Equivalent Static Analysis) shall not be used.
- Procedure 2 (Elastic Dynamic Analysis) shall be used for all "regular" bridges with two through six spans and "not regular" bridges with two or more spans in SDCs B, C, or D.
- Procedure 3 (Nonlinear Time History) shall only be used with WSDOT Bridge Design Engineer's approval.

4.2.9 Member Ductility Requirement for SDCs C and D

LRFD-SGS Article 4.9 – In-ground hinging for drilled shaft and pile foundations may be considered for the liquefied configuration with WSDOT Bridge Design Engineer approval.

4.2.10 Longitudinal Restrainers

LRFD-SGS Article 4.13.1 – Longitudinal restrainers shall be provided at the expansion joints between superstructure segments. Restrainers shall be designed in accordance with the FHWA Seismic Retrofitting Manual for Highway Structure (FHWA-HRT-06-032) Article 8.4 the Iterative Method. See the earthquake restrainer design example in the Appendix of this chapter. Restrainers shall be detailed in accordance with the requirements of Guide Specifications Article 4.13.3 and Section 4.4.5. Restrainers may be omitted for SDCs C and D where the available seat width exceeds the calculated support length specified in Equation C4.13.1-1.

Omitting restrainers for liquefiable sites shall be approved by the WSDOT Bridge Design Engineer.

Longitudinal restrainers shall not be used at the end piers (abutments).

4.2.11 Abutments

LRFD-SGS Article 5.2 – Diaphragm Abutment type shown in Figure 5.2.3.2-1 shall not be used for WSDOT bridges.

LRFD-SGS Article 5.2 – Abutments to be revised as follows:

4.2.11.1 - General

The participation of abutment walls in providing resistance to seismically induced inertial loads may be considered in the seismic design of bridges either to reduce column sizes or reduce the ductility demand on the columns. Damage to backwalls and wingwalls during earthquakes may be considered acceptable when considering no collapse criteria, provided that unseating or other damage to the superstructure does not occur. Abutment participation in the overall dynamic response of the bridge system shall reflect the structural configuration, the load transfer mechanism from the bridge to the abutment system, the effective stiffness and force capacity of the wall-soil system, and the level of acceptable abutment damage. The capacity of the abutments to resist the bridge inertial loads shall be compatible with the soil resistance that can be reliably mobilized, the structural design of the abutment wall, and whether the wall is permitted to be damaged by the design earthquake. The lateral load capacity of walls shall be evaluated on the basis of a rational passive earth-pressure theory.

The participation of the bridge approach slab in the overall dynamic response of bridge systems to earthquake loading and in providing resistance to seismically induced inertial loads may be considered permissible upon approval from both the WSDOT Bridge Design Engineer and the WSDOT Geotechnical Engineer.

The participation of the abutment in the ERS should be carefully evaluated with the Geotechnical Engineer and the Owner when the presence of the abutment backfill may be uncertain, as in the case of slumping or settlement due to liquefaction below or near the abutment.

4.2.11.2 - Longitudinal Direction

Under earthquake loading, the earth pressure action on abutment walls changes from a static condition to one of two possible conditions:

- The dynamic active pressure condition as the wall moves away from the backfill, or
- The passive pressure condition as the inertial load of the bridge pushes the wall into the backfill.

The governing earth pressure condition depends on the magnitude of seismically induced movement of the abutment walls, the bridge superstructure, and the bridge/abutment configuration.

For semi-integral (Figure 4.2.11-1a), L-shape abutment with backwall fuse (Figure 4.2.11-1b), or without backwall fuse (Figure 4.2.11-1c), for which the expansion joint is sufficiently large to accommodate both the cyclic movement between the abutment wall and the bridge superstructure (i.e., superstructure does not push against abutment wall), the seismically induced earth pressure on the abutment wall shall be considered to be the dynamic active pressure condition. However, when the gap at the expansion joint is not sufficient to accommodate the cyclic wall/bridge seismic movements, a transfer of forces will occur from the superstructure to the abutment wall. As a result, the active earth pressure condition will not be valid and the earth pressure approaches a much larger passive pressure load condition behind the backwall. This larger load condition is the main

cause for abutment damage, as demonstrated in past earthquakes. For semi-integral or L-shape abutments, the abutment stiffness and capacity under passive pressure loading are primary design concerns.

Figure 4.2.11-1 Abutment Stiffness and Passive Pressure Estimate

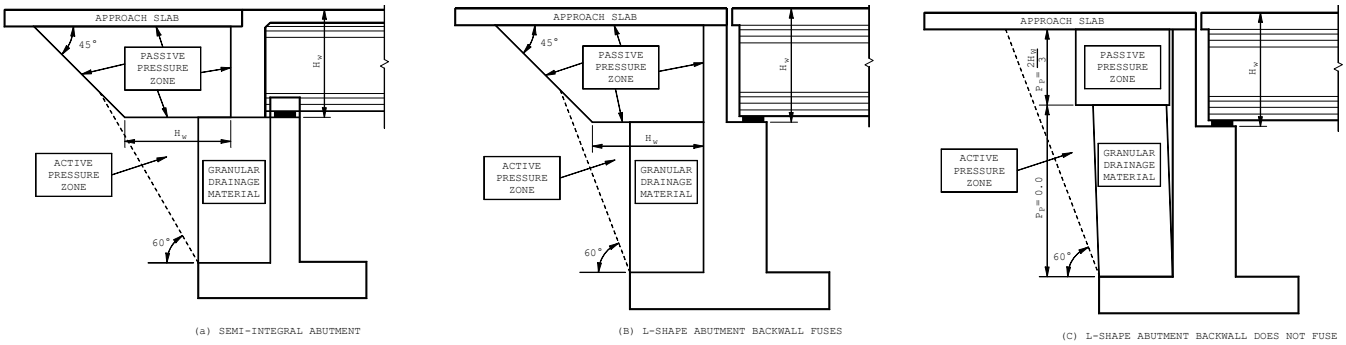

Where the passive pressure resistance of soils behind semi-integral or L-shape abutments will be mobilized through large longitudinal superstructure displacements, the bridge may be designed with the abutments as key elements of the longitudinal ERS. Abutments shall be designed to sustain the design earthquake displacements. When abutment stiffness and capacity are included in the design, it should be recognized that the passive pressure zone mobilized by abutment displacement extends beyond the active pressure zone normally used for static service load design. This is illustrated schematically in Figures 4.2.11-1a and 4.2.11-1b. Dynamic active earth pressure acting on the abutment need not be considered in the dynamic analysis of the bridge. The passive abutment resistance shall be limited to 70 percent of the value obtained using the procedure given in Article 4.2.11.2.1.

4.2.11.2.1 - Abutment Stiffness and Passive Pressure Estimate

Abutment stiffness, K_{eff} in kip/ft, and passive capacity, P_p in kips, should be characterized by a bilinear or other higher order nonlinear relationship as shown in Figure 4.2.11-2. When the motion of the back wall is primarily translation, passive pressures may be assumed uniformly distributed over the height (H_w) of the backwall or end diaphragm. The total passive force may be determined as:

$$P_p = {}_{pp} H_w W_w \qquad (4.2.11.2.1\text{-}1)$$

Where:

p_p = passive lateral earth pressure behind backwall or diaphragm (ksf)
H_w = height of back wall or end diaphragm exposed to passive earth pressure (feet)
W_w = width of back wall or diaphragm (feet)

Figure 4.2.11-2 Characterization of Abutment Capacity and Stiffness



(a) Semi-integral Abutment (b) L-shape Abutment

4.2.11.2.2 - Calculation of Best Estimate Passive Pressure P_p

If the strength characteristics of compacted or natural soils in the "passive pressure zone" are known, then the passive force for a given height, H_w, may be calculated using accepted analysis procedures. These procedures should account for the interface friction between the wall and the soil. The properties used shall be those indicative of the entire "passive pressure zone" as indicated in Figure 1. Therefore, the properties of backfill present immediately adjacent to the wall in the active pressure zone may not be appropriate as a weaker failure surface can develop elsewhere in the embankment.

For L-shape abutments where the backwall is not designed to fuse, H_w shall conservatively be taken as the depth of the superstructure, unless a more rational soil-structure interaction analysis is performed.

If presumptive passive pressures are to be used for design, then the following criteria shall apply:

- Soil in the "passive pressure zone" shall be compacted in accordance with *Standard Specifications* Section 2-03.3(14)I, which requires compaction to 95 percent maximum density for all “Bridge Approach Embankments”.
- For cohesionless, nonplastic backfill (fines content less than 30 percent), the passive pressure P_p may be assumed equal to $2H^w/3$ ksf per foot of wall length.

For other cases, including abutments constructed in cuts, the passive pressures shall be developed by a geotechnical engineer.

4.2.11.2.3 - Calculation of Passive Soil Stiffness

Equivalent linear secant stiffness, K_{eff} in kip/ft, is required for analyses. For semi-integral or L-shape abutments initial secant stiffness may be determined as follows:

$$K_{eff1} = \frac{P_p}{(F_w H_w)} \qquad (4.2.11.2.3\text{-}1)$$

Where:

P_p = passive lateral earth pressure capacity (kip)
H_w = height of back wall (feet)
F_w = the value of Fw to use for a particular bridge may be found in Table C3.11.1-1 of the AASHTO LRFD.

For L-shape abutments, the expansion gap should be included in the initial estimate of the secant stiffness as specified in:

$$K_{eff1} = \frac{P_p}{(F_w H_w + D_g)} \qquad (4.2.11.2.3\text{-}2)$$

Where:

D_g = width of gap between backwall and superstructure (feet)

For SDCs C and D, where pushover analyses are conducted, values of P_p and the initial estimate of K_{eff1} should be used to define a bilinear load-displacement behavior of the abutment for the capacity assessment.

4.2.11.2.4 - Modeling Passive Pressure Stiffness in the Longitudinal Direction

In the longitudinal direction, when the bridge is moving toward the soil, the full passive resistance of the soil may be mobilized, but when the bridge moves away from the soil no soil resistance is mobilized. Since passive pressure acts at only one abutment at a time, linear elastic dynamic models and frame pushover models should only include a passive

pressure spring at one abutment in any given model. Secant stiffness values for passive pressure shall be developed independently for each abutment.

As an alternative, for straight or with horizontal curves up to 30 degrees single frame bridges, and compression models in straight multi-frame bridges where the passive pressure stiffness is similar between abutments, a spring may be used at each abutment concurrently. In this case, the assigned spring values at each end need to be reduced by half because they act in simultaneously, whereas the actual backfill passive resistance acts only in one direction and at one time. Correspondingly, the actual peak passive resistance force at either abutment will be equal to the sum of the peak forces developed in two springs. In this case, secant stiffness values for passive pressure shall be developed based on the sum of peak forces developed in each spring. If computed abutment forces exceed the soil capacity, the stiffness should be softened iteratively until abutment displacements are consistent (within 30 percent) with the assumed stiffness.

4.2.11.3 - Transverse Direction

Transverse stiffness of abutments may be considered in the overall dynamic response of bridge systems on a case by case basis upon State Bridge Design Engineer approval.

Upon approval, the transverse abutment stiffness used in the elastic demand models may be taken as 50 percent of the elastic transverse stiffness of the adjacent bent.

Girder stops are typically designed to transmit the lateral shear forces generated by small to moderate earthquakes and service loads and are expected to fuse at the design event earthquake level of acceleration to limit the demand and control the damage in the abutments and supporting piles/shafts. Linear elastic analysis cannot capture the inelastic response of the girder stops, wingwalls or piles/shafts. Therefore, the forces generated with elastic demand assessment models should not be used to size the abutment girder stops. Girder stops for abutments supported on a spread footing shall be designed to sustain the lesser of the acceleration coefficient, A_s, times the superstructure dead load reaction at the abutment plus the weight of abutment and its footing or sliding friction forces of spread footings. Girder stops for pile/shaft supported foundations shall be designed to sustain the sum of 75 percent total lateral capacity of the piles/shafts and shear capacity of one wingwall.

The elastic resistance may be taken to include the use of bearings designed to accommodate the design displacements, soil frictional resistance acting against the base of a spread footing supported abutment, or pile resistance provided by piles acting in their elastic range.

The stiffness of fusing or breakaway abutment elements such as wingwalls (yielding or non-yielding), elastomeric bearings, and sliding footings shall not be relied upon to reduce displacement demands at intermediate piers.

Unless fixed bearings are used, girder stops shall be provided between all girders regardless of the elastic seismic demand. The design of girder stops should consider that unequal forces that may develop in each stop.

When fusing girder stops, transverse shear keys, or other elements that potentially release the restraint of the superstructure are used, then adequate support length meeting the requirements of Article 4.12 of the LRFD-SGS must be provided in the transverse direction as well as the longitudinal direction. Additionally, the expected redistribution of internal forces in the superstructure and other bridge system element must be

considered. Bounding analyses considering incremental release of transverse restraint at each end of the bridge should also be considered.

4.2.11.4 - Curved and Skewed Bridges

Passive earth pressure at abutments may be considered as a key element of the ERS of straight and curved bridges with abutment skews up to 20 degrees. For larger skews, due to a combination of longitudinal and transverse response, the span has a tendency to rotate in the direction of decreasing skew. Such motion will tend to cause binding in the obtuse corner and generate uneven passive earth pressure forces on the abutment, exceeding the passive pressure near one end of the backwall, and providing little or no resistance at other end. This requires a more refined analysis to determine the amount of expected movement. The passive pressure resistance in soils behind semi-integral or L-shape abutments shall be based on the projected width of the abutment wall normal to the centerline of the bridge. Abutment springs shall be included in the local coordinate system of the abutment wall.

4.2.12 Foundation – General

LRFD-SGS Article 5.3.1 – The required foundation modeling method (FMM) and the requirements for estimation of foundation springs for spread footings, pile foundations, and drilled shafts shall be based on the WSDOT State Geotechnical Engineer's recommendations.

4.2.13 Foundation – Spread Footing

LRFD-SGS Article C5.3.2 – Foundation springs for spread footings shall be determined in accordance with Section 7.2.7, *Geotechnical Design Manual* Section 6.5.1.1 and the WSDOT State Geotechnical Engineer's recommendations.

4.2.14 Procedure 3: Nonlinear Time History Method

LRFD-SGS Article 5.4.4 – The time histories of input acceleration used to describe the earthquake loads shall be selected in consultation with the WSDOT Geotechnical Engineer and the WSDOT State Bridge Design Engineer.

4.2.15 I_{eff} for Box Girder Superstructure

LRFD-SGS Article 5.6.3 – Gross moment of inertia shall be used for box girder superstructure modeling.

4.2.16 Foundation Rocking

LRFD-SGS Article 6.3.9 – Foundation rocking shall not be used for the design of WSDOT bridges.

4.2.17 Drilled Shafts

LRFD-SGS Article C6.5 – For WSDOT bridges, the scale factor for p-y curves or subgrade modulus for large diameter shafts shall not be used unless approved by the WSDOT State Geotechnical Engineer and WSDOT State Bridge Design Engineer.

4.2.18 Longitudinal Direction Requirements

LRFD-SGS Article 6.7.1 – Case 2: Earthquake Resisting System (ERS) with abutment contribution may be used provided that the mobilized longitudinal passive pressure is not greater than 70 percent of the value obtained using procedure given in Article 5.2.2.1.

4.2.19 Liquefaction Design Requirements

LRFD-SGS Article 6.8 – Soil liquefaction assessment shall be based on the WSDOT State Geotechnical Engineer's recommendation and *Geotechnical Design Manual* Section 6.4.2.7.

4.2.20 Reinforcing Steel

LRFD-SGS Article 8.4.1 – Longitudinal reinforcement for ductile members in SDC's B, C & D, including foundations where in-ground-hinging is considered as part of the ERS, shall conform to ASTM A706 Grade 60. ASTM A706 Grade 80 for longitudinal reinforcement for ductile members in SDC's B, C & D, including foundations where in-ground-hinging is considered as part of the ERS may be used on a case-by-case basis with the WSDOT State Bridge Design Engineer's approval. See Section 5.1.2 for other requirements.

For SDCs B, C, and D, the moment-curvature analyses based on strain compatibility and nonlinear stress strain relations shall be used to determine the plastic moment capacities of all ductile concrete members. The properties of reinforcing steel, as specified in Table 8-4.2-1, shall be used.

Deformed welded wire fabric may be used with the WSDOT State Bridge Design Engineer's approval.

Table 8.4.2-1 Properties for Reinforcing Steel Bars

Property	Notation	Bar Size	ASTM A706 Grade 60	ASTM A706 Grade 80	ASTM A615 Grade 60
Specified minimum yield strength (ksi)	f_y	#3– #18	60	80	60
Expected yield strength (ksi)	f_{ye}	#3– #18	68	85	68
Expected tensile strength (ksi)	f_{ue}	#3– #18	95	112	95
Expected yield strain	ε_{ye}	#3– #18	0.0023	0.0033	0.0023
Tensile strain at the onset of strain hardening	ε_{sh}	#3– #8	0.0150	0.0074	0.0150
		#9	0.0125		0.0125
		#10 & #11	0.0115		0.0115
		#14	0.0075		0.0075
		#18	0.0050		0.0050
Reduced ultimate tensile strain	ε^R_{su}	#4– #10	0.090	0.060	0.060
		#11– #18	0.060		0.040
Ultimate tensile strain	ε_{su}	#4– #10	0.120	0.095	0.090
		#11– #18	0.090		0.060

4.2.21 Concrete Modeling

LRFD-SGS Article 8.4.4- Revise the last paragraph as follows:

Where in-ground plastic hinging approved by the WSDOT State Bridge Design Engineer is part of the ERS, the confined concrete core shall be limited to a maximum compressive strain of 0.008. The clear spacing between the longitudinal reinforcements and between spirals and hoops in drilled shafts shall not be less than 6 inches or more than 8 inches when tremie placement of concrete is anticipated.

4.2.22 Expected Nominal Moment Capacity

LRFD-SGS Article 8.5

Replace the definition of λ_{mo} with the following:

λ_{mo}= overstrength factor
= 1.2 for ASTM A 706 Grade 60 reinforcement
= 1.4 for ASTM A 615 Grade 60 reinforcement

4.2.23 Interlocking Bar Size

LRFD-SGS Article 8.6.7 – The longitudinal reinforcing bar inside the interlocking portion of column (interlocking bars) shall be the same size of bars used outside the interlocking portion.

4.2.24 Splicing of Longitudinal Reinforcement in Columns Subject to Ductility Demands for SDCs C and D

LRFD-SGS Article 8.8.3 – The splicing of longitudinal column reinforcement outside the plastic hinging region shall be accomplished using mechanical couplers that are capable of developing the tensile strength of the spliced bar. Splices shall be staggered at least 2 feet. Lap splices shall not be used. The design engineer shall clearly identify the locations where splices in longitudinal column reinforcement are permitted on the plans. In general where the length of the rebar cage is less than 60 ft (72 ft for No. 14 and No. 18 bars), no splice in the longitudinal reinforcement shall be allowed.

4.2.25 Development Length for Column Bars Extended into Oversized Pile Shafts f or SDCs C and D

LRFD-SGS Article 8.8.10 – Extending column bars into oversized shaft shall be per Section 7.4.4.C, based on TRAC Report WA-RD 417.1 “Non-Contact Lap Splice in Bridge Column-Shaft Connections.”

4.2.26 Lateral Confinement for Oversized Pile Shaft for SDCs C and D

LRFD-SGS Article 8.8.12 – The requirement of this article for shaft lateral reinforcement in the column-shaft splice zone may be replaced with Section 7.8.2 K.

4.2.27 Lateral Confinement for Non-Oversized Strengthened Pile Shaft for SDCs C and D

LRFD-SGS Article 8.8.13 – Non oversized column shaft (the cross section of the confined core is the same for both the column and the pile shaft) is not permissible unless approved by the WSDOT State Bridge Design Engineer.

4.2.28 Requirements for Capacity Protected Members

LRFD-SGS Article 8.9 – Add the following paragraphs:

For SDCs C and D where liquefaction is identified, with the WSDOT State Bridge Design Engineer's approval, pile and drilled shaft in-ground hinging may be considered as an ERE. Where in-ground hinging is part of ERS, the confined concrete core should be limited to a maximum compressive strain of 0.008 and the member ductility demand shall be limited to 4.

Bridges shall be analyzed and designed for the non-liquefied condition and the liquefied condition in accordance with Article 6.8. The capacity protected members shall be designed in accordance with the requirements of Article 4.11. To ensure the formation of plastic hinges in columns, oversized pile shafts shall be designed for an expected nominal moment capacity, M_{ne}, at any location along the shaft, that is, equal to 1.25 times moment demand generated by the overstrength column plastic hinge moment and associated shear force at the base of the column. The safety factor of 1.25 may be reduced to 1.0 depending on the soil properties and upon the WSDOT State Bridge Design Engineer's approval.

The design moments below ground for extended pile shaft may be determined using the nonlinear static procedure (pushover analysis) by pushing them laterally to the displacement demand obtained from an elastic response spectrum analysis. The point of maximum moment shall be identified based on the moment diagram. The expected plastic hinge zone shall extend 3D above and below the point of maximum moment. The plastic hinge zone shall be designated as the "no splice" zone and the transverse steel for shear and confinement shall be provided accordingly.

4.2.29 Superstructure Capacity Design for Transverse Direction (Integral Bent Cap) for SDCs C and D

LRFD-SGS Article 8.11 – Revise the last paragraph as follows:

For SDCs C and D, the longitudinal flexural bent cap beam reinforcement shall be continuous. Splicing of cap beam longitudinal flexural reinforcement shall be accomplished using mechanical couplers that are capable of developing a minimum tensile strength of 85 ksi. Splices shall be staggered at least 2 feet. Lap splices shall not be used.

4.2.30 Superstructure Design for Non Integral Bent Caps for SDCs B, C, and D

LRFD-SGS Article 8.12 – Non integral bent caps shall not be used for continuous concrete bridges in SDC B, C, and D except at the expansion joints between superstructure segments.

4.2.31 Joint Proportioning

LRFD-SGS Article 8.13.4.1.1 – Revise the last bullet as follows:

Exterior column joints for box girder superstructure and other superstructures if the cap beam extends the joint far enough to develop the longitudinal cap reinforcement.

4.2.32 Cast-in-Place and Precast Concrete Piles

LRFD-SGS Article 8.16.2 – Minimum longitudinal reinforcement of 0.75 percent of A_g shall be provided for CIP piles in SDCs B, C, and D. Longitudinal reinforcement shall be provided for the full length of pile unless approved by the WSDOT Bridge Design Engineer.

4.2.33 Seismic Resiliency using Innovative Materials and Construction

Innovative materials and bridge construction are ideas that encourage engineers to consider principles that will enhance bridge performance, speed up construction, or add any other benefit to the industry. BDM Section 14.4 describes the self-centering columns that are designed restore much of their original shape after a seismic event. They're intended to improve the serviceability of a bridge after an earthquake. Self-centering columns are constructed with a precast concrete column segment with a duct running through it longitudinally. They rest on footings with post-tensioning (PT) strand developed into them. Once the precast column piece is set on the footing, the PT strand threads through the duct and gets anchored into the crossbeam above the column. The PT strand is unbonded to the column segment. As a column experiences a lateral load, the PT strand elastically stretches to absorb the seismic energy and returns to its original tension load after the seismic event. The expectation is the column would rotate as a rigid body and the PT strand would almost spring the column back to its original orientation.

Self-centering in bridge columns can be achieved using Shape Memory Alloy (SMA) and Engineered Cementitious Composite (ECC). These products are introduced into bridge design as a means to improve ductility, seismic resiliency, and serviceability of a bridge after an earthquake. SMA is a class of alloys that are manufactured from either a combination of nickel and titanium or copper, magnesium and aluminum. The alloy is shaped into round bars in sizes similar to conventional steel reinforcement. When stressed, the SMA can undergo large deformations and return to original shape.

4.3 Seismic Design Requirements for Bridge Modifications and Widening Projects

4.3.1 General

A bridge modification or widening is defined as where substructure bents are modified and new columns or piers are added, or an increase of bridge deck width or widenings to the sidewalk or barrier rails of an existing bridge resulting in significant mass increase or structural changes.

Bridge widenings in Washington State shall be designed in accordance with the requirements of the current edition of the LRFD-BDS. The seismic design of Ordinary, Recovery and Critical bridges shall be in accordance with the requirements of the LRFD-SGS, and WSDOT BDM.

The spectral response parameters shall be determined using USGS 2014 Seismic Hazard Maps and Site Coefficients defined in Section 4.2.3. The widening portion (new structure) shall be designed to meet current WSDOT standards for new Ordinary, Recovery and Critical bridges. Seismic analysis is required in accordance with Section 4.3.3 and is not required for single span bridges and bridges in SDC A. However, existing elements of single span bridges shall meet the requirements of LRFD-SGS as applicable.

4.3.2 Bridge Widening Project Classification

Bridge widening projects are classified according to the scope of work as either minor or major widening projects.

4.3.2.A Minor Modification and Widening Projects

A bridge widening project is classified as a minor widening project if all of the following conditions are met:

- Substructure bents are not modified and no new columns or piers are added, while abutments may be widened to accommodate the increase of bridge deck width.
- The net superstructure mass increase is equal or less than 10 percent of the original superstructure mass.
- Fixity conditions of the foundations are unchanged.
- There are no major changes of the seismicity of the bridge site that can increase seismic hazard levels or reduce seismic performance of the structure since the initial screening or most recent seismic retrofit.
- No change in live load use of the bridge.

4.3.2.B Major Modifications and Widening Projects

A bridge widening project is classified as a major widening project if any of the following conditions are met:

- Substructure bents are modified and new columns or piers are added, excepting abutments, which may be widened to accommodate the increase of bridge deck width.
- The net superstructure mass increase is more than 20 percent of the original superstructure mass.
- Fixity conditions of the foundations are changed.
- There are major changes of the seismicity of the bridge site that can increase seismic hazard levels or reduce seismic performance of the structure since the initial screening or most recent seismic retrofit.
- Change in live load use of the bridge

Major changes in seismicity include, but are not limited to, the following: near fault effect, significant liquefaction potential, or lateral spreading. If there are concerns about changes to the Seismic Design Response Spectrum at the bridge site, about a previous retrofit to the existing bridge, or an unusual imbalance of mass distribution resulting from the structure widening, the designer should consult the WSDOT Bridge and Structures Office.

4.3.3 Seismic Design Requirements Bridge Widening Projects

The Seismic Design requirements for Bridge Modifications and Widening are as follows and as illustrated in BDM Figure 4.3-1:

1. Ordinary bridge modification or widening projects classified as Minor Modification or Widening do not require either a seismic evaluation or a retrofit of the structure. If the conditions for Minor Modification or Widening project are met, it is anticipated that the modified or widened structure will not draw enough additional seismic demand to significantly affect the existing sub-structure elements.
2. Seismic analysis is required for all Major Modifications and Widening projects at project scoping level in accordance with Section 4.1. A complete seismic analysis is required for Ordinary bridges in Seismic Design Category (SDC) B, C, and D for major modifications and widening projects as described below. A project geotechnical report (including any unstable soil or liquefaction issues) shall be available to the structural engineer for seismic analysis. Seismic analysis shall be performed for both existing and widened structures. Capacity/Demand (C/D) ratios are required for existing bridge elements including foundation.
3. The widening portion of the structure shall be designed for liquefiable soils condition in accordance to the LRFD-SGS, and WSDOT BDM, unless soils improvement is provided to eliminate liquefaction.
4. Procedure for Ordinary Bridges: Seismic improvement of existing columns and crossbeams to C/D > 1.0 is required. The cost of seismic improvement shall be paid for with widening project funding (not from the Retrofit Program). The seismic retrofit of the existing Ordinary structure shall conform to the BDM, while the newly widened portions of the bridge shall comply with the LRFD-SGS, except for balanced stiffness criteria, which may be difficult to meet due to the existing bridge configuration. However, the designer should strive for the best balanced frame stiffness for the entire widened structure that is attainable in a cost effective manner. Major Modification and Widening Projects require the designer to determine the seismic C/D ratios of the existing bridge elements in the final widened condition. If the C/D ratios of columns and crossbeam of existing structure are less than 1.0, the improvement of seismically deficient elements is mandatory and the widening project shall include the improvement of existing seismically deficient bridge elements to C/D ratio of above 1.0. The C/D ratio of 1.0 is required to prevent the collapse of the bridge during the seismic event as required for life safety. Seismic improvement of the existing foundation elements (footings, pile caps, piles, and shafts to C/D ratios > 1.0) could be deferred to the Bridge Seismic Retrofit Program.
5. Procedure for Recovery/Critical Bridges: The initial goal is to conduct the seismic design effort so the composite structure (existing bridge and widening) meet requirements of the two-level seismic design (FEE and SEE) de-scribed in BDM Section 4.1. This includes the superstructure, substructure and foundation elements of the composite structure. Retrofitting or strengthening of the existing structure

may be necessary to achieve this. Depending on the year the bridge was constructed, type of foundation and capacity of the soils during a seismic event, it may become expensive to meet this goal. If the Engineer determines it is cost prohibitive to meet the two-level design criteria, the State Bridge Design Engineer may approve deviations. Examples of potential deviations include:

A. Meeting two-level design criteria for the widened portion, but only achieving Ordinary bridge criteria for the existing bridge.

B. Meeting two-level design criteria for the above-ground portions of the composite structure, but not achieving this for the below-ground portions (foundations).

C. Performing a two-level design, but requiring deviations from the displacement ductility demand limits identified in BDM Section 4.1.

D. Only achieving Ordinary (no collapse) criteria for the composite structure.

Figure 4.3-1 Seismic Design Criteria for Bridge Modifications and Widening

Modifications or Widening	Alterations	Seismic Design Guidance	Illustration
Minor Modifications • Deck Rehabilitations • Traffic Barrier Replacements • sidewalk addition/ rehabilitation • No change in LL use	• Superstructure mass increase is less than 10% • Fixity conditions are not changed	• Do not Require seismic evaluation • Do not require retrofit of the structure	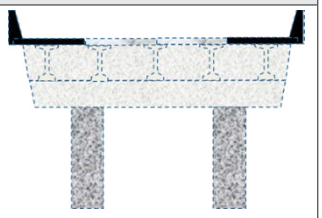
Major Modifications Minor Modifications PLUS • Replacing/adding girder and slab • Change in LL use	• Superstructure mass increase between 10% to 20% and/or • Fixity conditions are changed	• Seismic evaluation of the structure is required. • Do-No-Harm is required for substructure. • Do-No-Harm is required for foundation.	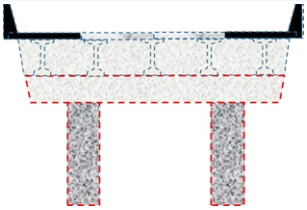
Major Widening – Case 1 Minor Modifications PLUS • Superstructure or Bent Widening	• Superstructure mass increase is more than > 20% and/or • Substructure/bents modified and/or • Fixity conditions are changed	• Seismic evaluation of the structure is required. • C/D ratio of equal or greater than 1.0 is required for substructure. • Do-No-Harm could be used for Foundation.	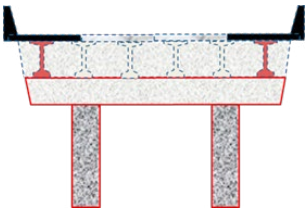
Major Widening – Case 2 • widening on one side	• Substructure or bents are modified. Columns are added on one side.	• Seismic evaluation of the structure is required. • C/D ratio of equal or greater than 1.0 is required for substructure. • Do-No-Harm could be used for Foundation.	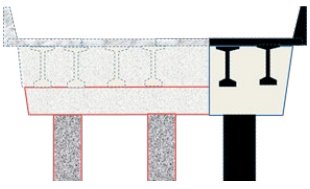
Major Widening – Case 3 • widening on both sides	• Substructure or bents are modified. Columns are added on both sides.	• Seismic evaluation of the structure is required. • C/D ratio of equal or greater than 1.0 is required for substructure. • Do-No-Harm could be used for Foundation.	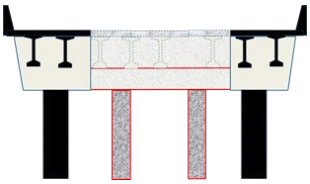

4.3.4 Scoping for Bridge Widening and Liquefaction Mitigation

The Region project manager should contact the Bridge Office for bridge widening and retaining wall scoping assistance before project funding commitments are made to the legislature and the public. The WSDOT Bridge and Structures office will work with the WSDOT Geotechnical Office to assess the potential for liquefaction or other seismic hazards that could affect the cost of the proposed structures. The initial evaluation design time and associated costs for the WSDOT Geotechnical and WSDOT Bridge and Structures offices shall be considered at the scoping phase.

4.3.5 Design and Detailing Considerations

Support Length – The support length at existing abutments, piers, in-span hinges, and pavement seats shall be checked. If there is a need for longitudinal restrainers, transverse restrainers, or additional support length on the existing structure, they shall be included in the widening design.

Connections Between Existing and New Elements – Connections between the new elements and existing elements should be designed for maximum over-strength forces. Where yielding is expected in the crossbeam connection at the extreme event limit state, the new structure shall be designed to carry live loads independently at the Strength I limit state. In cases where large differential settlement and/or a liquefaction-induced loss of bearing strength are expected, the connections may be designed to deflect or hinge in order to isolate the two parts of the structure. Elements subject to inelastic behavior shall be designed and detailed to sustain the expected deformations.

Longitudinal joints between the existing and new structure are not permitted.

Differential Settlement – The geotechnical designer should evaluate the potential for differential settlement between the existing structure and widening structure. Additional geotechnical measures may be required to limit differential settlements to tolerable levels for both static and seismic conditions. The bridge designer shall evaluate, design, and detail all elements of new and existing portions of the widened structure for the differential settlement warranted by the WSDOT State Geotechnical Engineer. Angular distortions between adjacent foundations greater than 0.008 (RAD) in simple spans and 0.004 (RAD) in continuous spans should not be permitted in settlement criteria.

The horizontal displacement of pile and shaft foundations shall be estimated using procedures that consider soil-structure interaction (see *Geotechnical Design Manual* Section 8.12.2.3). Horizontal movement criteria should be established at the top of the foundation based on the tolerance of the structure to lateral movement with consideration of the column length and stiffness. Tolerance of the superstructure to lateral movement will depend on bridge seat widths, bearing type(s), structure type, and load distribution effects.

Foundation Types – The foundation type of the new structure should match that of the existing structure. However, a different type of foundation may be used for the new structure due to geotechnical recommendations or the limited space available between existing and new structures. For example, a shaft foundation may be used in lieu of spread footing.

Existing Strutted Columns – The horizontal strut between existing columns may be removed. The existing columns shall then be analyzed with the new unbraced length and retrofitted if necessary.

Non Structural Element Stiffness – Median barrier and other potentially stiffening elements shall be isolated from the columns to avoid any additional stiffness to the system.

Deformation capacities of existing bridge members that do not meet current detailing standards shall be determined using the provisions of Section 7.8 of the *Retrofitting Manual for Highway Structures: Part 1 – Bridges*, FHWA-HRT-06-032. Deformation capacities of existing bridge members that meet current detailing standards shall be determined using the latest edition of the LRFD-SGS.

Joint shear capacities of existing structures shall be checked using *Caltrans Bridge Design Aid*, 14-4 Joint Shear Modeling Guidelines for Existing Structures.

In lieu of specific data, the reinforcement properties provided in Table 4.3.5-1 should be used.

Table 4.3.5-1 Stress Properties of Reinforcing Steel Bars

Property	Notation	Bar Size	ASTM A706	ASTM A615 Grade 60	ASTM A615 Grade 40*
Specified minimum yield stress (ksi)	f_y	No. 3 - No. 18	60	60	40
Expected yield stress (ksi)	f_{ye}	No. 3 - No. 18	68	68	48
Expected tensile strength (ksi)	f_{ue}	No. 3 - No. 18	95	95	68
Expected yield strain	ε_{ye}	No. 3 - No. 18	0.0023	0.0023	0.00166
Onset of strain hardening	ε_{sh}	No. 3 - No. 8	0.0150	0.0150	0.0193
		No. 9	0.0125	0.0125	
		No. 10 & No. 11	0.0115	0.0115	
		No. 14	0.0075	0.0075	
		No. 18	0.0050	0.0050	
Reduced ultimate tensile strain	ε_{su}^{R}	No. 4 - No. 10	0.090	0.060	0.090
		No. 11 - No. 18	0.060	0.040	0.060
Ultimate tensile strain	ε_{su}	No. 4 - No. 10	0.120	0.090	0.120
		No. 11 - No. 18	0.090	0.060	0.090

* ASTM A615 Grade 40 is for existing bridges in widening projects.

Isolation Bearings – Isolation bearings may be used for bridge widening projects to reduce the seismic demand through modification of the dynamic properties of the bridge. These bearings are a viable alternative to strengthening weak elements or non-ductile bridge substructure members of the existing bridge. Use of isolation bearings needs the approval of WSDOT Bridge Design Engineer. Isolation bearings shall be designed per the requirements specified in Section 9.3.

4.4 Seismic Retrofitting of Existing Ordinary Bridges

Seismic retrofitting of existing ordinary bridges shall be performed in accordance with the FHWA publication FHWA-HRT-06-032, *Seismic Retrofitting Manual for Highway Structures: Part 1 – Bridges* and WSDOT amendments as follows:

- Article 1.5.3 The spectral response parameters shall be determined using USGS 2014 Seismic Hazard Maps and Site Coefficients defined in Section 4.2.3.
- Article 7.4.2 Seismic Loading in Two or Three Orthogonal Directions

Revise the first paragraph as follows:

When combining the response of two or three orthogonal directions the design value of any quantity of interest (displacement, bending moment, shear or axial force) shall be obtained by the 100-30 percent combination rule as described in LRFD-SGS Article 4.4.

- Delete Eq. 7.44 and replace with the following:

$$L_p = \text{the maximum of } [(8800\varepsilon_y d_b) \text{ or } (0.08L + 4400\varepsilon_y d_b)] \quad (7\text{-}44)$$

- Delete Eq. 7.49 and replace with the following:

$$\phi_p = \left(5\left(\frac{V_i - V_m}{V_i - V_f}\right) + 2\right)\phi_y \quad (7.49)$$

- Delete Eq. 7.51 and replace with the following:

$$\phi_p = \left(4\left(\frac{V_{ji} - V_{jh}}{V_{ji} - V_{jf}}\right) + 2\right)\phi_y \quad (7.51)$$

The seismic retrofit of Recovery and Critical bridges shall be in accordance with the requirements of the WSDOT BDM with consultation of Bridge Design Engineer and Geotechnical with regard to practicability and cost.

4.4.1 Seismic Analysis Requirements

The seismic retrofit of Ordinary, Recovery and Critical bridges shall be in accordance with the requirements of the Seismic Retrofitting Manual, and WSDOT BDM. For Ordinary bridges, the seismic analysis need only be performed for the upper level (1,000 year return period, SEE defined in Section 4.1.1) ground motions with a life safety seismic performance level. For Recovery and Critical Bridges, the seismic design required for Ordinary bridges shall be performed and adequacy of the existing foundation for lower level seismic demand shall be investigated. The lower level earthquake has a return period of about 210 years (FEE defined in Section 4.1.1). A summary of C/D ratios for all elements shall be provided. With the approval of the WSDOT State Bridge and Structures, State Bridge Design and State Geotechnical Engineers the retrofit of foundation elements with seismic deficiencies could be deferred to the Seismic Retrofit Program.

The first step in retrofitting a bridge is to analyze the existing structure to identify seismically deficient elements. The initial analysis consists of generating capacity/demand ratios for all relevant bridge components. Seismic displacement and force demands shall be determined using the multi-mode spectral analysis of Section 5.4.2.2 (at a minimum). Prescriptive requirements, such as support length, shall be considered a demand and shall be included in the analysis. Seismic capacities shall be determined in accordance with the requirements of the *Seismic Retrofitting Manual*. Displacement capacities shall be determined by the Method D2 – Structure Capacity/Demand (Pushover) Method of Section 5.6.

4.4.2 Seismic Retrofit Design

Once seismically deficient bridge elements have been identified, appropriate retrofit measures shall be selected and designed. Table 1-11, Chapters 8, 9, 10, 11, and Appendices D thru F of the *Seismic Retrofitting Manual* shall be used in selecting and designing the seismic retrofit measures. The WSDOT Bridge and Structure Office Seismic Specialist will be consulted in the selection and design of the retrofit measures.

4.4.3 Computer Analysis Verification

The computer results will be verified to ensure accuracy and correctness. The designer should use the following procedures for model verification:

- Using graphics to check the orientation of all nodes, members, supports, joint, and member releases. Make sure that all the structural components and connections correctly model the actual structure.
- Check dead load reactions with hand calculations. The difference should be less than 5 percent.
- Calculate fundamental and subsequent modes by hand and compare results with computer results.
- Check the mode shapes and verify that structure movements are reasonable.
- Increase the number of modes to obtain 90 percent or more mass participation in each direction. GTSTRUDL/SAP2000 directly calculates the percentage of mass participation.
- Check the distribution of lateral forces. Are they consistent with column stiffness? Do small changes in stiffness of certain columns give predictable results?

4.4.4 Earthquake Restrainers

Longitudinal restrainers shall be high strength steel rods conform to ASTM F 1554 Grade 105, including Supplement Requirements S2, S3 and S5. Nuts, and couplers if required, shall conform to ASTM A 563 Grade DH. Washers shall conform to AASHTO M 293. High strength steel rods and associated couplers, nuts and washers shall be galvanized after fabrication in accordance with AASHTO M 232 or epoxy coated. The length of longitudinal restrainers shall be less than 24 feet.

4.4.5 Isolation Bearings

Isolation bearings may be used for seismic retrofit projects to reduce the demands through modification of the dynamic properties of the bridge as a viable alternative to strengthening weak elements of non-ductile bridge substructure members of existing bridge. Use of isolation bearings needs the approval of WSDOT State Bridge Design Engineer. Isolation bearings shall be designed per the requirements specified in Section 9.3.

4.5 Seismic Design Requirements for Retaining Walls and Buried Structure

4.5.1 Seismic Design of Retaining Walls

All retaining walls shall include seismic design load combinations. The design acceleration for retaining walls shall be determined in accordance with the LRFD-SGS. Once the design acceleration is determined, the designer shall follow the applicable design specification requirements listed in Appendix 8.1-A1:

> Exceptions to the cases described in Appendix 8.1-A1 may occur with approval from the WSDOT State Bridge Design Engineer and/or the WSDOT State Geotechnical Engineer.

4.5.2 Seismic Design of Buried Structure

Buried structures shall be designed for seismic effects in accordance with the requirements in Section 8.3.3.E.

4.99 References

AASHTO *LRFD Bridge Design Specifications*, 9th Edition, 2020

AASHTO *Guide Specifications for LRFD Seismic Bridge Design*, 2nd Edition, 2011

AASHTO *Guide Specifications for Seismic Isolation Design*, 3rd Edition, 2010

Caltrans *Bridge Design Aids* 14 4 Joint Shear Modeling Guidelines for Existing Structures, California Department of Transportation, August 2008

FHWA *Seismic Retrofitting Manual for Highway Structures: Part 1 Bridges*, Publication No. FHWA-HRT-06-032, January 2006

McLean, D.I. and Smith, C.L., *Noncontact Lap Splices in Bridge Column-Shaft Connections*, Report Number WA-RD 417.1, Washington State University

WSDOT *Geotechnical Design Manual* M 46-03, Environmental and Engineering Program, Geotechnical Services, Washington State Department of Transportation

This page intentionally left blank.

Chapter 5 Concrete Structures Contents

5.0 General 5-1

5.1 Materials 5-2

5.1.1 Concrete 5-2

5.1.1.A Strength of Concrete 5-2

5.1.1.A.1 CIP Concrete Bridges 5-2

5.1.1.A.2 Prestressed Concrete Girders 5-2

5.1.1.B Classes of Concrete 5-2

5.1.1.B.1 Class 3000 5-2

5.1.1.B.2 Class 4000 5-2

5.1.1.B.3 Class 4000A 5-2

5.1.1.B.4 Class 4000D 5-2

5.1.1.B.5 Class 4000P and 5000P 5-2

5.1.1.B.6 Class 4000W 5-3

5.1.1.B.7 Class 5000 or Higher 5-3

5.1.1.C Relative Compressive Concrete Strength 5-3

5.1.1.D Modulus of Elasticity 5-4

5.1.1.E Shrinkage and Creep 5-4

5.1.1.F Shrinkage 5-5

5.1.1.G Grout 5-5

5.1.1.H Mass Concrete 5-5

5.1.1.I Self-Consolidating Concrete (SCC) 5-6

5.1.1.J Shotcrete 5-6

5.1.1.K Lightweight Aggregate Concrete 5-7

5.1.1.L Concrete Cover to Reinforcement 5-8

5.1.1.L.1 Precast Prestressed Concrete Girders 5-8

5.1.1.L.2 Concrete Exposed to Salt/Seawater 5-8

5.1.1.M Ultra-High Performance Concrete (UHPC) 5-8

5.1.2 Reinforcing Steel 5-9

5.1.2.A Types and Grades 5-9

5.1.2.A.1 Corrosion Resistant Reinforcement 5-9

5.1.2.B Sizes 5-10

5.1.2.C Development 5-10

5.1.2.C.1 Tension Development Length 5-10

5.1.2.C.2 Compression Development Length 5-10

5.1.2.C.3 Tension Development Length of Standard Hooks 5-10

5.1.2.D Splices 5-11

5.1.2.D.1 Tension Lap Splices 5-11

5.1.2.D.2 Compression Lap Splices 5-11

5.1.2.D.3 Mechanical Splices 5-11

5.1.2.D.4 Welded Splices 5-11

5.1.2.E Hooks and Bends 5-11

5.1.2.F Fabrication Lengths 5-12

5.1.2.G Placement . . . 5-12
5.1.2.H Joint and Corner Details . . . 5-13
5.1.2.H.1 T-Joint . . . 5-13
5.1.2.H.2 “Normal” Right Corners . . . 5-13
5.1.2.H.3 Right or Obtuse Angle Corners . . . 5-13
5.1.2.I Welded Wire Reinforcement . . . 5-14
5.1.2.J Headed Steel Reinforcing Bars . . . 5-14
5.1.3 Prestressing Steel . . . 5-14
5.1.3.A General . . . 5-14
5.1.3.B Stress Limits . . . 5-15
5.1.3.C Prestressing Strands . . . 5-15
5.1.3.C.1 Straight Strands . . . 5-15
5.1.3.C.2 Harped Strands . . . 5-15
5.1.3.C.3 Temporary Strands . . . 5-15
5.1.3.D Development of Prestressing Strand . . . 5-16
5.1.3.D.1 General . . . 5-16
5.1.3.D.2 Partially Debonded Strands . . . 5-16
5.1.3.D.3 Strand Development Outside of Prestressed Concrete Girders . . . 5-16
5.1.4 Prestress Losses . . . 5-22
5.1.4.A Instantaneous Losses . . . 5-22
5.1.4.A.1 Elastic Shortening of Concrete . . . 5-22
5.1.4.A.2 Anchorage Set Loss . . . 5-22
5.1.4.A.3 Friction Losses . . . 5-23
5.1.4.B Approximate Estimate of Time-Dependent Losses . . . 5-23
5.1.4.C Refined Estimates of Time-Dependent Losses . . . 5-23
5.1.4.D Total Effective Prestress . . . 5-24
5.1.4.E Temporary Losses . . . 5-25
5.1.4.E.1 Lifting of Girders From Casting Beds . . . 5-25
5.1.4.E.2 Transportation . . . 5-25
5.1.4.E.3 Erection . . . 5-25
5.1.4.E.4 Final Configuration . . . 5-25
5.1.5 Post-tensioning Systems . . . 5-26
5.2 Design Considerations . . . 5-27
5.2.1 Service and Fatigue Limit States . . . 5-27
5.2.1.A General . . . 5-27
5.2.1.B Control of Cracking . . . 5-27
5.2.1.C Stress Limits in Prestressed Concrete Members . . . 5-27
5.2.2 Strength-Limit State . . . 5-29
5.2.2.A Flexure . . . 5-29
5.2.2.A.1 Flexural Design of Nonprestressed Singly-Reinforced Rectangular Beams . . . 5-30
5.2.2.B Shear . . . 5-30

5.2.2.C Interface Shear . . . 5-31
5.2.2.C.1 Interface Shear Between Deck Slab and Girder . . . 5-32
5.2.2.C.2 Interface Shear Friction at Girder End . . . 5-32
5.2.2.D Shear and Torsion . . . 5-33
5.2.3 Strut-and-Tie Model . . . 5-33
5.2.4 Deflection and Camber . . . 5-34
5.2.4.A General . . . 5-34
5.2.4.B Deflection Calculation for Prestressed Concrete Girders . . . 5-34
5.2.4.B.1 Elastic Deflection Due to Release of Prestress . . . 5-35
5.2.4.B.2 Creep Deflection Before Cutting Temporary Strands . . . 5-35
5.2.4.B.3 Deflection Due to Cutting of Temporary Strands . . . 5-35
5.2.4.B.4 Diaphragm Load Deflection . . . 5-35
5.2.4.B.5 Creep Deflection After Casting Diaphragms . . . 5-35
5.2.4.B.6 Deck Slab Load Deflection . . . 5-35
5.2.4.B.7 Superimposed Dead Load Deflection . . . 5-35
5.2.4.B.8 Final Camber . . . 5-35
5.2.4.C Pre-camber . . . 5-36
5.2.5 Construction Joints . . . 5-36
5.2.5.A Types of Joints . . . 5-36
5.2.5.B Shear Keys . . . 5-36
5.2.6 Inspection Access and Lighting . . . 5-37
5.2.6.A Inspection Access . . . 5-37
5.2.6.B Access Hatch, Air Vent Holes and Inspection Lighting . . . 5-37
5.3 Reinforced Concrete Box Girder Bridges . . . 5-40
5.3.1 Box Girder Basic Geometries . . . 5-40
5.3.1.A Web Spacing . . . 5-40
5.3.1.B Basic Dimensions . . . 5-40
5.3.1.B.1 Top Slab Thickness, T1 (includes ½″ wearing surface) . . . 5-40
5.3.1.B.2 Bottom Slab Thickness, T2 . . . 5-41
5.3.1.B.3 Girder Stem (Web) Thickness, T3 . . . 5-41
5.3.1.B.4 Intermediate Diaphragm Thickness, T4 and Diaphragm Spacing . . . 5-41
5.3.1.C Construction Considerations . . . 5-42
5.3.1.D Load Distribution . . . 5-42
5.3.1.D.1 Unit Design . . . 5-42
5.3.1.D.2 Dead Loads . . . 5-42
5.3.1.D.3 Live Load . . . 5-42
5.3.2 Reinforcement . . . 5-45
5.3.2.A Top Slab Reinforcement . . . 5-45
5.3.2.A.1 Near Center of Span . . . 5-45
5.3.2.A.2 Near Intermediate Piers . . . 5-45
5.3.2.A.3 Bar Patterns . . . 5-45
5.3.2.B Bottom Slab Reinforcement . . . 5-46
5.3.2.B.1 Near Center of Span . . . 5-46

5.3.2.B.2 Near Intermediate Piers . . . 5-47
5.3.2.B.3 Bar Patterns . . . 5-47
5.3.2.C Web Reinforcement . . . 5-47
5.3.2.C.1 Vertical Stirrups . . . 5-47
5.3.2.C.2 Web Longitudinal Reinforcement . . . 5-48
5.3.2.D Intermediate Diaphragm . . . 5-48
5.3.3 Crossbeam . . . 5-52
5.3.3.A General . . . 5-52
5.3.3.B Basic Geometry . . . 5-52
5.3.3.C Loads . . . 5-52
5.3.3.D Reinforcement Design and Details . . . 5-52
5.3.3.D.1 Top Reinforcement . . . 5-55
5.3.3.D.2 Skin Reinforcement . . . 5-55
5.3.4 End Diaphragm . . . 5-55
5.3.4.A Basic Geometry . . . 5-55
5.3.4.B Reinforcing Steel Details . . . 5-57
5.3.5 Dead Load Deflection and Camber . . . 5-57
5.3.6 Thermal Effects . . . 5-58
5.3.6.A Effective Bridge Temperature and Movement . . . 5-58
5.3.6.B Differential Temperature . . . 5-58
5.3.7 Hinges . . . 5-58
5.3.8 Drain Holes . . . 5-58
5.4 Hinges and Inverted T-Beam Pier Caps . . . 5-60
5.5 Bridge Widenings . . . 5-62
5.5.1 Review of Existing Structures . . . 5-62
5.5.1.A General . . . 5-62
5.5.1.B Original Contract Plans and Special Provisions . . . 5-62
5.5.1.C Original Calculations . . . 5-62
5.5.1.D Final Records . . . 5-62
5.5.2 Analysis and Design Criteria . . . 5-63
5.5.2.A General . . . 5-63
5.5.2.A.1 Appearance . . . 5-63
5.5.2.A.2 Materials . . . 5-63
5.5.2.A.3 Load Distribution and Construction Sequence . . . 5-63
5.5.2.A.4 Specifications . . . 5-63
5.5.2.A.5 Geometrical Constraints . . . 5-63
5.5.2.A.6 Overlay . . . 5-63
5.5.2.A.7 Strength of the Existing Structure . . . 5-64
5.5.2.A.8 Special Considerations . . . 5-64
5.5.2.B Seismic Design Criteria for Bridge Widenings . . . 5-64
5.5.2.C Substructure . . . 5-65
5.5.2.C.1 Selection of Foundation . . . 5-65
5.5.2.C.2 Scour and Drift . . . 5-65

5.5.2.D Superstructure . . . 5-65
5.5.2.D.1 Camber . . . 5-65
5.5.2.D.2 Closure Strip . . . 5-65
5.5.2.D.3 Stress Levels and Deflections in Existing Structures . . . 5-66
5.5.2.E Stability of Widening . . . 5-66
5.5.3 Removing Portions of the Existing Structure . . . 5-66
5.5.4 Attachment of Widening to Existing Structure . . . 5-67
5.5.4.A General . . . 5-67
5.5.4.A.1 Lap and Mechanical Splices . . . 5-67
5.5.4.A.2 Welding Reinforcement . . . 5-67
5.5.4.A.3 Drilling Into Existing Structure . . . 5-67
5.5.4.A.4 Dowelling Reinforcing Bars Into the Existing Structure . . . 5-67
5.5.4.A.5 Shear Transfer Across a Dowelled Joint . . . 5-69
5.5.4.A.6 Preparation of Existing Surfaces for Concreting . . . 5-69
5.5.4.A.7 Control of Shrinkage and Deflection on Connecting Reinforcement . . . 5-69
5.5.4.A.8 Post-tensioning . . . 5-69
5.5.4.B Connection Details . . . 5-70
5.5.4.B.1 Box Girder Bridges . . . 5-70
5.5.4.B.2 Flat Slab Bridges . . . 5-76
5.5.4.B.3 T-Beam Bridges . . . 5-77
5.5.4.B.4 Prestressed Concrete Girder Bridges . . . 5-78
5.5.5 Expansion Joints . . . 5-79
5.5.6 Possible Future Widening for Current Designs . . . 5-80
5.5.7 Bridge Widening Falsework . . . 5-80
5.6 Prestressed Concrete Girder Superstructures . . . 5-81
5.6.1 WSDOT Standard Prestressed Concrete Girder Types . . . 5-81
5.6.2 Design Criteria . . . 5-84
5.6.2.A Support Conditions . . . 5-85
5.6.2.B Composite Action . . . 5-85
5.6.2.B.1 General . . . 5-85
5.6.2.B.2 Load Application . . . 5-85
5.6.2.B.3 Composite Section Properties . . . 5-85
5.6.2.B.4 Slenderness Ratio . . . 5-85
5.6.2.C Design Procedure . . . 5-87
5.6.2.C.1 General . . . 5-87
5.6.2.C.2 Stress Conditions . . . 5-87
5.6.2.D Standard Strand Locations . . . 5-87
5.6.2.E Girder End Types . . . 5-89
5.6.2.E.1 End Type A . . . 5-89
5.6.2.E.2 End Type B . . . 5-91
5.6.2.E.3 End Type C . . . 5-92
5.6.2.E.4 End Type D . . . 5-94
5.6.2.F Splitting Resistance in End Regions of Prestressed Concrete Girders . . . 5-95

5.6.2.G Confinement Reinforcement in End Regions of Prestressed Concrete Girders . . . 5-95
5.6.2.H Girder Stirrups . . . 5-95
5.6.2.I Section Properties . . . 5-95
5.6.3 Fabrication and Handling . . . 5-97
5.6.3.A Shop Plans . . . 5-97
5.6.3.B Special Problems for Fabricators . . . 5-97
5.6.3.B.1 Strand Tensioning . . . 5-97
5.6.3.B.2 Hold Down Forces . . . 5-97
5.6.3.B.3 Numbers of Strands . . . 5-97
5.6.3.C Handling of Prestressed Concrete Girders . . . 5-97
5.6.3.C.1 In-Plant Handling . . . 5-97
5.6.3.C.2 Lateral Stability During Handling . . . 5-97
5.6.3.D Shipping Prestressed Concrete Girders . . . 5-98
5.6.3.D.1 General . . . 5-98
5.6.3.D.2 Mode of Transportation . . . 5-98
5.6.3.D.3 Weight Limitations . . . 5-99
5.6.3.D.4 Support Locations . . . 5-99
5.6.3.D.5 Height Limitations . . . 5-99
5.6.3.D.6 Lateral Stability During Shipping . . . 5-99
5.6.3.E Erection and Bridge Deck Construction . . . 5-100
5.6.3.F Construction Sequence for Multi-Span Prestressed Concrete Girder Bridges . . . 5-101
5.6.4 Superstructure Optimization . . . 5-101
5.6.4.A Girder Selection . . . 5-101
5.6.4.A.1 Girder Series Selection . . . 5-101
5.6.4.A.2 Girder Concrete Strength . . . 5-101
5.6.4.A.3 Girder Spacing . . . 5-101
5.6.4.B Bridge Deck Cantilevers . . . 5-102
5.6.4.B.1 Appearance . . . 5-102
5.6.4.B.2 Economy . . . 5-102
5.6.4.B.3 Bridge Deck Strength . . . 5-102
5.6.4.B.4 Drainage . . . 5-102
5.6.4.B.5 Bridge Curvature . . . 5-103
5.6.4.C Diaphragm Requirements . . . 5-103
5.6.4.C.1 General . . . 5-103
5.6.4.C.2 Design . . . 5-103
5.6.4.C.3 Geometry . . . 5-103
5.6.4.C.4 Full or Partial Depth Intermediate Diaphragms . . . 5-104
5.6.4.C.5 Tub Girder Intermediate Diaphragms . . . 5-104
5.6.4.D Skew Effects . . . 5-104
5.6.4.D.1 Analysis . . . 5-104
5.6.4.D.2 Detailing . . . 5-105
5.6.4.E Grade and Cross Slope Effects . . . 5-106
5.6.4.F Curve Effect and Flare Effect . . . 5-106
5.6.4.G Girder Pad Reinforcement . . . 5-106

5.6.5 Repair of Damaged Prestressed Concrete Girders at Fabrication 5-106
5.6.6 Repair of Damaged Prestressed Concrete Girders in Existing Bridges 5-107
5.6.6.A General 5-107
5.6.6.B Repair Procedure 5-107
5.6.6.B.1 Minor Damage 5-107
5.6.6.B.2 Moderate Damage 5-107
5.6.6.B.3 Severe Damage 5-108
5.6.6.B.4 Repair vs. Replacement of Damaged Girder 5-109
5.6.6.C Miscellaneous References 5-111
5.6.7 Deck Girders 5-111
5.6.7.A General 5-111
5.6.7.B Slab Girders 5-112
5.6.7.C Double-Tee and Ribbed Deck Girders 5-112
5.6.7.D Deck Bulb-Tee Girders 5-112
5.6.7.E Wide Flange Deck Girders 5-113
5.6.7.F Wide Flange Thin Deck Girders 5-114
5.6.8 Prestressed Concrete Tub Girders 5-114
5.6.8.A General 5-114
5.6.8.B Curved Tub Girders 5-114
5.6.9 Prestressed Concrete Girder Checking Requirement 5-115
5.6.10 Review of Shop Plans for Pre-tensioned Girders 5-115
5.7 Bridge Decks 5-116
5.7.1 Bridge Deck Requirements 5-116
5.7.1.A Minimum Bridge Deck Thickness 5-116
5.7.1.B Computation of Bridge Deck Strength 5-116
5.7.1.C Computation of “A” Dimension 5-117
5.7.1.D Staged Construction 5-117
5.7.2 Bridge Deck Reinforcement 5-117
5.7.2.A Transverse Reinforcement 5-117
5.7.2.B Longitudinal Reinforcement 5-118
5.7.2.B.1 Simple Spans 5-118
5.7.2.B.2 Continuous Spans 5-119
5.7.2.C Distribution of Flexural Reinforcement 5-119
5.7.2.D Bar Patterns 5-120
5.7.2.E Concrete Bridge Deck Design and Detailing 5-121
5.7.3 Stay-In-Place Deck Panels 5-122
5.7.3.A General 5-122
5.7.3.B Design Criteria 5-122
5.7.3.C Limitations on SIP Deck Panels 5-122
5.7.4 Bridge Deck Protection 5-123
5.7.4.A Deck Protection Systems 5-123
5.7.4.A.1 Type 1 Protection System 5-123
5.7.4.A.2 Type 2 Protection System 5-124

5.7.4.A.3 Type 3 Protection System . . . 5-126
5.7.4.A.4 Type 4 Protection System . . . 5-127
5.7.4.A.5 Type 5 Protection System . . . 5-127
5.7.4.B Existing Bridge Deck Widening . . . 5-128
5.7.4.B.1 Rebar . . . 5-128
5.7.4.B.2 Concrete Decks . . . 5-128
5.7.4.B.3 Concrete Overlays . . . 5-128
5.7.4.B.4 HMA Overlays . . . 5-129
5.7.4.B.5 Small Width Widening . . . 5-129
5.7.4.B.6 Expansion Joints . . . 5-129
5.7.4.C Bridge Deck Overlays . . . 5-129
5.7.4.C.1 Surface Preparation . . . 5-130
5.7.4.C.2 Existing Structure Evaluation . . . 5-130
5.7.4.C.3 Deck Repair . . . 5-131
5.7.5 HMA Paving on Bridge Decks . . . 5-131
5.7.5.A Design Responsibilities . . . 5-131
5.7.5.B Design Considerations . . . 5-132
5.7.5.B.1 HMA Depth . . . 5-132
5.7.5.B.2 Grade Controlled Structures . . . 5-132
5.7.5.B.3 Grade Transitions . . . 5-133
5.7.5.B.4 Full Removal . . . 5-133
5.7.5.B.5 Bare Deck HMA . . . 5-133
5.7.5.B.6 Bridge Transverse Joint Seals . . . 5-134
5.7.5.B.7 Bituminous Surface Treatments (BST) . . . 5-134
5.7.5.B.8 Culverts and Other Structures . . . 5-135
5.7.5.B.9 Paving Equipment Load Restrictions . . . 5-135
5.7.5.B.10 Plans Preparation . . . 5-135

5.8 Cast-in-place Post-Tensioned Bridges . . . 5-136
5.8.1 Design Parameters . . . 5-136
5.8.1.A General . . . 5-136
5.8.1.B Bridge Types . . . 5-136
5.8.1.B.1 Slab Bridge . . . 5-136
5.8.1.B.2 T-Beam Bridge . . . 5-137
5.8.1.B.3 Box Girder Bridge . . . 5-137
5.8.1.C Strand and Tendon Arrangements . . . 5-137
5.8.1.D Layout of Anchorages and End Blocks . . . 5-139
5.8.1.E Superstructure Shortening . . . 5-142
5.8.1.F Effects of Curved Tendons . . . 5-142
5.8.1.G Edge Tension Forces . . . 5-143
5.8.2 Analysis . . . 5-143
5.8.2.A General . . . 5-143
5.8.2.B Section Properties . . . 5-144
5.8.2.C Preliminary Stress Check . . . 5-144
5.8.2.D Camber . . . 5-145
5.8.2.E Expansion Bearing Offsets . . . 5-145

5.8.3 Post-tensioning 5-145
5.8.3.A Tendon Layout 5-145
5.8.3.B Prestress Losses 5-146
5.8.3.C Jacking End 5-146
5.8.3.D Steel Stress Curve 5-147
5.8.3.E Flexural Stress in Concrete 5-148
5.8.3.F Prestress Moment Curves 5-149
5.8.3.F.1 Single-Span Bridges, Simply Supported 5-149
5.8.3.F.2 Multispan Continuous Bridges 5-149
5.8.3.G Partial prestressing 5-149
5.8.4 Shear and Anchorages 5-149
5.8.4.A Shear Capacity 5-149
5.8.4.B Horizontal Shear 5-150
5.8.4.C End Block Stresses 5-150
5.8.5 Temperature Effects 5-150
5.8.6 Construction 5-151
5.8.6.A General 5-151
5.8.6.B Contract Plans 5-151
5.8.6.C Shop Plans 5-151
5.8.6.D Review of Post-tensioning Installation Drawings 5-151
5.8.6.E During Construction 5-152
5.8.7 Post-tensioning Notes Contract Plans 5-152
5.8.7.A Plan Details 5-152
5.8.7.B Post-tensioning Notes 5-153
5.9 Spliced Prestressed Concrete Girders 5-154
5.9.1 Definitions 5-154
5.9.2 WSDOT Criteria for Use of Spliced Girders 5-154
5.9.3 Girder Segment Design 5-155
5.9.3.A Design Considerations 5-155
5.9.3.B Post-tensioning 5-155
5.9.4 Joints Between Segments 5-156
5.9.4.A General 5-156
5.9.4.B Location of Closure Joints 5-156
5.9.4.C Details of Closure Joints 5-157
5.9.4.D Joint Design 5-157
5.9.5 Review of Shop Plans for Spliced Prestressed Concrete Girders 5-160
5.9.6 Post-tensioning Notes — Spliced Prestressed Concrete Girders 5-160
5.10 Segmental Bridges 5-161
5.10.1 Cross Section Dimensions 5-161

5.11 Bridge Standard Drawings 5-162

5.12 Appendices 5-166

Appendix 5.1-A1 Standard Hooks 5-167
Appendix 5.1-A2 Minimum Reinforcement Clearance and Spacing for Beams and Columns 5-168
Appendix 5.1-A3 Reinforcing Bar Properties 5-169
Appendix 5.1-A4 Tension Development Length of Deformed Bars 5-170
Appendix 5.1-A5 Compression Development Length and Minimum Lap Splice of Grade 60 Bars 5-173
Appendix 5.1-A6 Tension Development Length of 90º and 180º Standard Hooks 5-174
Appendix 5.1-A7 Tension Lap Splice Lengths of Grade 60 Bars – Class B 5-176
Appendix 5.1-A8 Prestressing Strand Properties and Development Length 5-179
Appendix 5.2-A1 Working Stress Design 5-180
Appendix 5.2-A2 Working Stress Design 5-181
Appendix 5.2-A3 Working Stress Design 5-182
Appendix 5.3-A1 Positive Moment Reinforcement 5-183
Appendix 5.3-A2 Negative Moment Reinforcement 5-184
Appendix 5.3-A3 Adjusted Negative Moment Case I (Design for M at Face of Support) . 5-185
Appendix 5.3-A4 Adjusted Negative Moment Case II (Design for M at 1/4 Point) 5-186
Appendix 5.3-A5 Cast-In-Place Deck Slab Design for Positive Moment Regions f'_c = 4.0 ksi 5-187
Appendix 5.3-A6 Cast-In-Place Deck Slab Design for Negative Moment Regions f'_c = 4.0 ksi 5-188
Appendix 5.3-A7 Slab Overhang Design-Interior Barrier Segment 5-189
Appendix 5.3-A8 Slab Overhang Design-End Barrier Segment 5-190
Appendix 5.6-A1-1 Span Capability of W Girders 5-191
Appendix 5.6-A1-2 Span Capability of WF Girders 5-192
Appendix 5.6-A1-3 Span Capability of Deck Bulb Tee Girders 5-194
Appendix 5.6-A1-4 Span Capability of WF Thin Deck Girders 5-195
Appendix 5.6-A1-5 Span Capability of WF Deck Girders 5-196
Appendix 5.6-A1-6 Span Capability of Trapezoidal Tub Girders without Top Flange 5-197
Appendix 5.6-A1-7 Span Capability of Trapezoidal Tub Girders with Top Flange 5-198
Appendix 5.6-A1-8 Span Capability of Post-tensioned Spliced I-Girders 5-199
Appendix 5.6-A1-9 Span Capability of Post-tensioned Spliced Tub Girders 5-201
Appendix 5.6-A1-10 Span Capability of WF Girders with Lighweight Concrete 5-203

5.99 References 5-205

Chapter 5 Concrete Structures

5.0 General

The provisions in this section apply to the design of cast-in-place (CIP) and precast concrete structures, both reinforced and prestressed.

Design of concrete structures shall be based on the requirements and guidance cited herein and in the current AASHTO *LRFD Bridge Design Specifications* (LRFD), AASHTO *Guide Specifications for LRFD Seismic Bridge Design* (SEISMIC), AASHTO *Guide Specification for Accelerated Bridge Construction* (ABC), Special Provisions and the *Standard Specifications for Road, Bridge, and Municipal Construction* (*Standard Specifications*) M 41-10.

5.1 Materials

5.1.1 Concrete

5.1.1.A Strength of Concrete

Pacific NW aggregates have consistently resulted in concrete strengths, which may exceed 10,000 psi in 28 days. Specified concrete strengths should be rounded to the next highest 100 psi.

5.1.1.A.1 *CIP Concrete Bridges*

Since conditions for placing and curing concrete for CIP components are not as controlled as they are for precast bridge components, Class 4000 concrete is typically used. Where significant economy can be gained or structural requirements dictate, Class 5000 concrete may be used with the approvals of the State Bridge Design Engineer, State Bridge Construction Office, and WSDOT Materials Lab.

5.1.1.A.2 *Prestressed Concrete Girders*

The recommended specified 28-day concrete compressive strength (f'c) is 7.0 ksi. Where higher strengths would eliminate a line of girders, a maximum of 10.0 ksi can be specified. Slab girders should be limited to 8.0 ksi.

The minimum specified concrete compressive strength at release (f'ci) is 5.0 ksi for prestressed concrete slab girders and 6.0 ksi for all other prestressed girders. Where higher strengths would eliminate a line of girders, the compressive strength at release may be increased up to 7.5 ksi. Release strengths as high as 8.5 ksi can be achieved with extended curing for special circumstances.

Specified concrete strengths should generally be rounded to the nearest 0.1 ksi above what is required for design and constructability.

5.1.1.B Classes of Concrete

5.1.1.B.1 *Class 3000*

Used in large sections with light to nominal reinforcement, mass pours, sidewalks, curbs, gutters, and nonstructural concrete guardrail anchors, luminaire bases.

5.1.1.B.2 *Class 4000*

Used in CIP post-tensioned or conventionally reinforced concrete box girders, slabs, traffic and pedestrian barriers, approach slabs, footings, box culverts, wing walls, curtain walls, retaining walls, columns, and crossbeams.

5.1.1.B.3 *Class 4000A*

Used for bridge approach slabs.

5.1.1.B.4 *Class 4000D*

Used for CIP bridge decks.

5.1.1.B.5 *Class 4000P and 5000P*

Used for CIP piles, shafts and deep foundations where vibration is not feasible or practical.

5.1.1.B.6 *Class 4000W*

Used underwater in seals.

5.1.1.B.7 *Class 5000 or Higher*

Used in CIP post-tensioned concrete box girder construction, deep bridge foundations, or in other special structural applications if significant economy can be gained or structural requirements dictate. Class 5000 or higher concrete is generally available near large urban centers. Designers shall confirm availability at the project site before specifying Class 5000 or higher concrete (such as with WACA).

The specified 28-day compressive strengths (*f'c*) are equal to the numerical class of concrete. The compressive strengths for design are shown in Table 5.1.1-1.

Table 5.1.1-1 28-Day Compressive Design Strength

Classes of Concrete	Design Compressive Strength (psi)
COMMERCIAL	2300
3000	3000
4000, 4000A, 4000D, 4000P	4000
4000W	2400*
5000, 5000P	5000
6000	6000

*40 percent reduction from Class 4000.

5.1.1.C Relative Compressive Concrete Strength

1. During design or construction of a bridge, it is necessary to determine the strength of concrete at various stages of construction. For instance, *Standard Specifications* Section 6-02.3(17)J discusses the time at which falsework and forms can be removed to various percentages of the concrete design strength. Occasionally, construction problems will arise which require a knowledge of the relative strengths of concrete at various ages. Table 5.1.1-2 shows the approximate values of the minimum compressive strengths of different classes of concrete at various ages. If the concrete has been cured under continuous moist curing at an average temperature, it can be assumed that these values have been developed.
2. Curing of the concrete (especially in the first 24 hours) has a very important influence on the strength development of concrete at all ages. Temperature affects the rate at which the chemical reaction between cement and water takes place. Loss of moisture can seriously impair the concrete strength.
3. If test strength is above or below that shown in Table 5.1.1-2, the age at which the design strength will be reached can be determined by direct proportion.

   For example, if the relative strength at 10 days is 64 percent instead of the minimum 70 percent shown in Table 5.1.1-2, the time it takes to reach the design strength can be determined using equation 5.1.1-1 below.

   Let x = relative strength to determine the age at which the concrete will reach the design strength

$$\frac{x}{70} = \frac{100}{64} \quad Therefore, x = 110\% \tag{5.1.1-1}$$

From Table 5.1.1-2, the design strength should be reached in 40 days.

Table 5.1.1-2 Relative and Compressive Strength of Concrete

Age	Relative Strength	Class 5000	Class 4000	Class 3000	Age	Relative Strength	Class 5000	Class 4000	Class 3000
Days	%	ksi	ksi	ksi	Days	%	ksi	ksi	ksi
3	35	1.75	1.40	1.05	20	91	4.55	3.64	2.73
4	43	2.15	1.72	1.29	21	93	4.65	3.72	2.79
5	50	2.50	2.00	1.50	22	94	4.70	3.76	2.82
6	55	2.75	2.20	1.65	23	95	4.75	3.80	2.85
7	59	2.95	2.36	1.77	24	96	4.80	3.84	2.88
8	63	3.15	2.52	1.89	25	97	4.85	3.88	2.91
9	67	3.35	2.68	2.01	26	98	4.90	3.92	2.94
10	70	3.5	2.80	2.10	27	99	4.95	3.96	2.97
11	73	3.65	2.92	2.19	28	100	5.00	4.00	3.00
12	75	3.75	3.00	2.25	30	102	5.10	4.08	3.06
13	77	3.85	3.08	2.31	40	110	5.50	4.40	3.30
14	79	3.95	3.16	2.37	50	115	5.75	4.60	3.45
15	81	4.05	3.24	2.43	60	120	6.00	4.80	3.60
16	83	4.15	3.32	2.49	70	125	6.25	5.00	3.75
17	85	4.25	3.34	2.55	80	129	6.45	5.16	3.87
18	87	4.35	3.48	2.61	90	131	6.55	5.24	3.93
19	89	4.45	3.56	2.67	100	133	6.70	5.40	4.00

5.1.1.D Modulus of Elasticity

The modulus of elasticity shall be determined as specified in AASHTO LRFD Section 5.4.2.4. For calculation of the modulus of elasticity, the unit weight of plain concrete (w_c) shall be taken as 0.155 kcf for prestressed concrete girders and 0.150 kcf for normal-weight concrete. The correction factor (*K1*) shall normally be taken as 1.0.

5.1.1.E Shrinkage and Creep

Shrinkage and creep shall be calculated in accordance with AASHTO LRFD Section 5.4.2.3. The relative humidity, *H*, may be taken as 75 percent for standard conditions. The maturity of concrete, *t*, may be taken as 2,000 days for standard conditions. The volume-to-surface ratio, *V/S*, is given in Table 5.6.1-1 for standard WSDOT prestressed concrete girders.

In determining the maturity of concrete at initial loading, *ti*, one day of accelerated curing by steam or radiant heat may be taken as equal to seven days of normal curing.

The final deflection is a combination of the elastic deflection and the creep effect associated with given loads shown by the equation below.

$$\Delta_{total} = \Delta_{elastic}[1 + \psi(t, t_i)] \quad (5.1.1\text{-}2)$$

Figure 5.1.1-1 provides creep coefficients for a range of typical initial concrete strength values, *f′ci*, as a function of time from initial seven day steam cure (*ti* = 7 days). The figure uses a volume-to-surface, *V/S*, ratio of 3.3 as an average for girders and relative humidity, *H*, equal to 75 percent.

Figure 5.1.1-1 Creep Coefficient for Standard Conditions as Function of Initial Concrete Strength

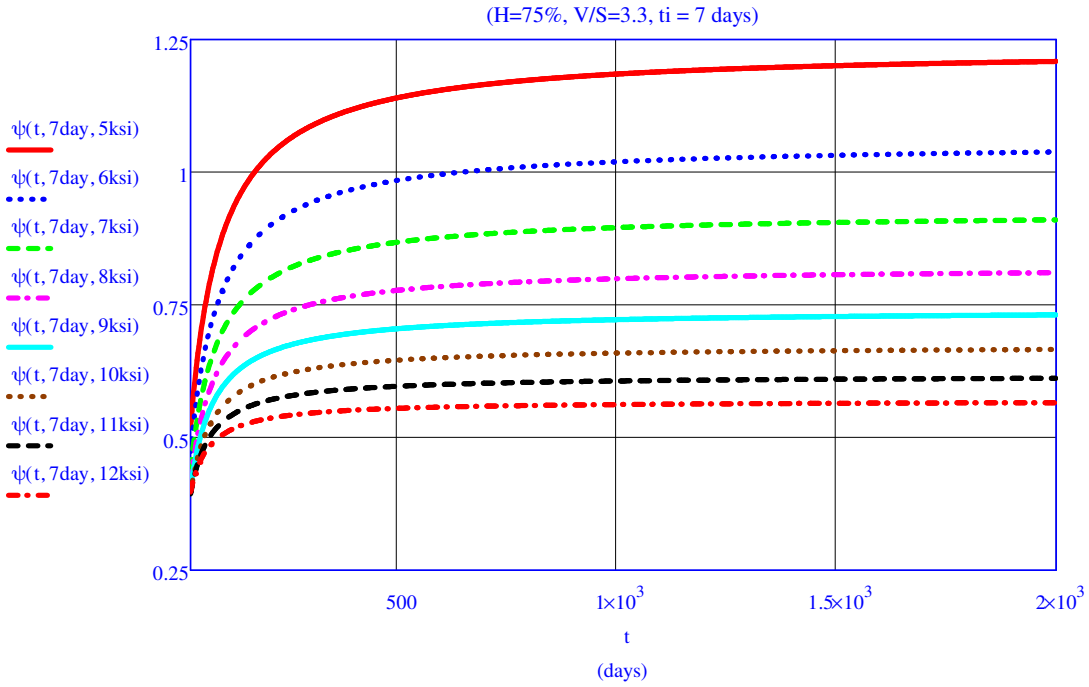

5.1.1.F Shrinkage

Concrete shrinkage strain, εsh, shall be calculated in accordance with AASHTO LRFD.

5.1.1.G Grout

Grout is usually a prepackaged cement based grout or non-shrink grout that is mixed, placed, and cured as recommended by the manufacturer. It is used under steel base plates for both bridge bearings and luminaries or sign bridge bases. Should the grout pad thickness exceed 4″, steel reinforcement shall be used. For design purposes, the strength of the grout, if properly cured, can be assumed to be equal to or greater than that of the adjacent concrete but not greater than 4000 psi. Non-shrink grout is used in keyways between precast prestressed tri-beams, double-tees, and deck bulb tees (see *Standard Specifications* Section 6-02.3(25)O for deck bulb tee exception).

5.1.1.H Mass Concrete

Mass concrete is any volume of concrete with dimensions large enough to require that measures be taken to cope with the generation of heat from hydration of the cement and attendant volume change to minimize cracking. Temperature-related cracking may be experienced in thick-section concrete structures, including spread footings, pile caps, bridge piers, crossbeams, thick walls, and other structures as applicable.

Concrete placements with least dimension greater than 6 feet should be considered mass concrete, although smaller placements with least dimension greater than 3 feet may also have problems with heat generation effects. Shafts need not be considered mass concrete.

The temperature of mass concrete shall not exceed 160°F. The temperature difference between the geometric center of the concrete and the center of nearby exterior surfaces shall not exceed 35°F.

Designers could mitigate heat generation effects by specifying construction joints and placement intervals. Designers should consider requiring the Contractor to submit a thermal control plan, which may include such things as:

1. Temperature monitors and equipment.
2. Insulation.
3. Concrete cooling before placement.
4. Concrete cooling after placement, such as by means of internal cooling pipes.
5. Use of smaller, less frequent placements.
6. Other methods proposed by the Contractor and approved by the Engineer of Record.

Concrete mix design optimization, such as using low-heat cement, fly ash or slag cement, low-water/cement ratio, low cementitious materials content, larger aggregate, etc. is acceptable as long as the concrete mix meets the requirements of the *Standard Specifications* for the specified concrete class.

The ACI Manual of Concrete Practice Publication 207 and specifications used for the Tacoma Narrows Bridge Project suspension cable anchorages (2003-2006) can be used as references.

5.1.1.I Self-Consolidating Concrete (SCC)

Self-consolidating concrete (SCC) may be used in structural members such as precast prestressed concrete girders, precast noise wall panels, barriers, three-sided structures, etc. as described in *Standard Specifications* Section 6-02.3(27).

SCC may be specified for cast-in-place applications where the use of conventional concrete could be challenging and problematic. Examples are where new concrete is being cast up against an existing soffit, or in members with very dense/congested reinforcing steel. Use of SCC for primary structural components such as columns, crossbeams, slabs, etc., requires the approval of the WSDOT Bridge Design Engineer.

5.1.1.J Shotcrete

Shotcrete could be used as specified in WSDOT Standard Plans. Shotcrete may not be suitable for some critical applications unless approved by the Engineer of Record.

For shotcrete structures in a marine environment (excluding Standard Plans), any steel reinforcing or components within 6" of the shotcrete surface shall be galvanized. Epoxy-coated reinforcing could be acceptable if test panels can demonstrate that the shotcreting process does not damage the epoxy coating. Marine environments are defined in Section 6.7.1.

Substitution of CIP conventional concrete in the contract document with shotcrete requires the approval of the Engineer of Record.

Some potential shortfalls of shotcrete as compared to conventional CIP concrete include:

- **Durability** – Conventional concrete is placed in forms and vibrated for consolidation. Shotcrete, whether placed by wet or dry material feed, is pneumatically applied to the surface and is not consolidated as conventional concrete. Due to the difference in consolidation, permeability can be affected. If the permeability is not low enough, the service life of the shotcrete will be affected and may not meet the minimum of 75 years specified for conventional concretes.

  Observation of some projects indicates the inadequate performance of shotcrete to properly hold back water. This results in leaking and potential freezing, seemingly at a higher rate than conventional concrete. Due to the method of placement of shotcrete, air entrainment is difficult to control. This leads to less resistance of freeze/thaw cycles.
- **Cracking** – There is more cracking observed in shotcrete surfaces compared to conventional concrete. Excessive cracking in shotcrete could be attributed to its higher shrinkage, method of curing, and lesser resistance to freeze/thaw cycles. The shotcrete cracking is more evident when structure is subjected to differential shrinkage.
- **Corrosion Protection** – The higher permeability of shotcrete places the steel reinforcement (whether mesh or bars) at a higher risk of corrosion than conventional concrete applications. Consideration for corrosion protection may be necessary for some critical shotcrete applications.
- **Safety** – Carved shotcrete and shotcrete that needs a high degree of relief to accent architectural features lead to areas of 4″-6″ of unreinforced shotcrete. These areas can be prone to an accelerated rate of deterioration. This, in turn, places pedestrians, bicyclists, and traffic next to the wall at risk of falling debris.
- **Visual Quality and Corridor Continuity** – As shotcrete is finished by hand, standard architectural design, as defined in the *Design Manual* M 22-01, typically cannot be met. This can create conflicts with the architectural guidelines developed for the corridor. Many times the guidelines are developed with public input. If the guidelines are not met, the public develops a distrust of the process. In other cases, the use of faux rock finishes, more commonly used by the private sector, can create the perception of the misuse of public funds.

5.1.1.K Lightweight Aggregate Concrete

Lightweight aggregate concrete shall not be used on bridge decks or other components exposed to traffic wheel loads in service.

5.1.1.L Concrete Cover to Reinforcement

Concrete cover to reinforcement shall conform to AASHTO LRFD Section 5.10.1.

5.1.1.L.1 *Precast Prestressed Concrete Girders*

Cover to prestressing strands in precast prestressed concrete girders may be measured to the center of the strand.

Cover to mild steel reinforcement in precast prestressed concrete girders shall conform to AASHTO LRFD Section 5.10.1. However, cover to ties and stirrups may be reduced to 1.0 inch in "Exterior other than above" applications. See Section 5.6.7.A for additional cover requirements for deck girders.

5.1.1.L.2 *Concrete Exposed to Salt/Seawater*

Salt/sea water can be an aggressive corrosive environment that significantly shortens the service life of reinforced concrete structures. ACI 201.2R 7.2.1 provides some guidance on severity of exposure: "The severity of marine exposures can vary greatly within a given concrete structure. In general, continuous submersion is the least aggressive exposure. Areas where capillary suction and evaporation are prevalent are the most aggressive because these processes tend to increase the concentration of salts. Examples of such exposures include reclaimed coastal areas with foundations below saline groundwater level, intertidal zones, and splash zones. "Corrosive water or soil contains greater or equal to 500 part per million (ppm) of chlorides. Sites that are considered corrosive due soley to sulfate content greater than or equal to 2,000 ppm and/or a pH of less than or equal to 5.5 should be considered non-corrosive in determining minimum cover.

Designers shall provide the minimum cover specified in AASHTO LRFD Table 5.12.3-1 to concrete structures with direct exposure to salt/sea water such as the Pacific Ocean and the Puget Sound. However, use of other corrosion mitigation strategies described in ACI 201.2R 7.2.3 and ACI 357.3R could be used to reduce this cover or provide additional protection such as minimizing concrete permeability, using corrosion resistant reinforcement, cathodic protection, treatments that penetrate or are applied on the surface of the concrete to slow the entry of chloride ions, etc.

5.1.1.M Ultra-High Performance Concrete (UHPC)

Ultra-high performance concrete is allowed for field cast-connections between precast elements. It may be used for repairs, overlays or other uses with State Bridge Design Engineer approval. WSDOT has funded two research projects with the Washington State University and the University of Washington studying the connection of wide flange deck girders using UHPC. The material studied is a high strength, high bond, fiber reinforced, flowable concrete capable of developing non-contact lap splices in a short distance. The material studied does not provide the same properties as common prepackaged commercial UHPC products, but it is capable of developing compact field connections between precast elements using locally available materials.

5.1.2 Reinforcing Steel

5.1.2.A Types and Grades

Steel reinforcement conforming to ASTM A 706 provides controlled ductility and enhanced weldability. Steel reinforcement for cast-in-place components and precast substructure components of bridges shall conform to ASTM A 706 unless noted otherwise. Steel reinforcement for precast bridge superstructure components, precast buried structures, retaining walls, barriers and other structures not designed for ductile seismic behavior shall conform to either ASTM A 706 or AASHTO M31 (ASTM A615). Steel reinforcement that is welded shall conform to ASTM A 706.

Grade 60 is the preferred grade for most components and structures. Grade 80 high-strength reinforcing steel may be used selectively to reduce congestion, reduce weight, speed up installation and/or reduce cost where its use is permitted and economical. Bridge decks, crossbeams, spread footings and foundation caps are components where Grade 80 longitudinal reinforcement could be economical. See Section 4.2.20 for additional seismic design requirements.

Designers should consider the need for additional development length when using high strength reinforcing steel. For improved economy, designers should minimize the number of different bar sizes on a job which use high-strength reinforcement. Where high-strength steel reinforcement is used in combination with Grade 60 reinforcement, designers should avoid specifying higher grades for bar sizes that Grade 60 is specified. This practice prevents confusion and improper installation on site. Mechanical couplers are available for high-strength reinforcement, but splices should be staggered and located in regions of low stress.

Transverse steel reinforcement for shear and torsion with a yield strength, f_y, in excess of 75 ksi shall use 75 ksi for resistance calculations. The limit of 75 ksi is intended to maintain the concrete's effectiveness in resisting shear by limiting the size of diagonal cracks that develop.

5.1.2.A.1 *Corrosion Resistant Reinforcement*

Corrosion resistant reinforcing such as stainless steel, chromium steel, galvanized steel or epoxy-coated steel may be used where added corrosion protection is needed. Glass fiber reinforced polymer (GFRP) bars may be used with State Bridge Design Engineer approval.

Epoxy-coated reinforcing is a preferred and economical method of enhanced corrosion protection compared to uncoated steel reinforcing. See Section 5.7.4 for use in Bridge Deck Protection Systems. Plans shall designate bar marks with "E".

Galvanized steel reinforcing shall conform to either ASTM A767 Class 1 or ASTM A1094. Chromate treatment of galvanized steel shall be left as optional for the contractor. Plans shall designate bar marks with "G".

Stainless steel reinforcing shall conform to ASTM A955, UNS S24100, UNS S31653 or UNS31803. Plans shall designate bar marks with "SS".

Corrosion resistant chromium alloyed reinforcing such as ChromX® (alternatively MMFX) shall conform to ASTM A1035 Type CM or CS. Type CS (with 9% chromium and a higher level of corrosion resistance) should be used where corrosion resistance beyond that of epoxy-coated reinforcing is desired. This reinforcement may be used in the design of bridge decks, substructure and foundation members where rebar congestion is a concern

or where corrosion protection is needed. Contract documents should avoid referring to reinforcement by trade names, such as ChromX® or MMFX. Plans shall designate bar marks with "CR".

GFRP reinforcing shall conform to the requirements of ASTM D7957. This type of reinforcing bar may be used in bridge decks in any Seismic Design Category, and in crossbeams and foundations in Seismic Design Category A. Design shall be in accordance with *AASHTO LRFD Bridge Design Guide Specifications for GRFP-Reinforced Concrete*, 2nd Edition. Plans shall designate bar marks with "GF".

Engineers shall minimize the potential for dissimilar metal corrosion when combining different types of reinforcing steel in a structure. Where corrosion resistant steel is used, specifications shall be provided to require industry standard best-practices for fabrication, handling, placing and protection.

5.1.2.B Sizes

Reinforcing bars are referred to in the contract plans and specifications by number and vary in size from #3 to #18. For bars up to and including #8, the number of the bar coincides with the bar diameter in eighths of an inch. The #9, #10, and #11 bars have diameters that provide areas equal to 1″ × 1″ square bars, 1⅛″ × 1⅛″ square bars and 1¼″ × 1¼″ square bars respectively. Similarly, the #14 and #18 bars correspond to 1½″ × 1½″ and 2″ × 2″ square bars, respectively.

5.1.2.C Development

5.1.2.C.1 *Tension Development Length*

Development length or anchorage of reinforcement is required on both sides of a point of maximum stress at any section of a reinforced concrete member. Development of reinforcement in tension shall be in accordance with AASHTO LRFD Section 5.10.8.2.1.

Appendix 5.1-A4 shows the tension development length for both uncoated and epoxy coated Grade 60 bars for normal weight concrete with specified strengths of 4.0 to 6.0 ksi.

5.1.2.C.2 *Compression Development Length*

Development of reinforcement in compression shall be in accordance with AASHTO LRFD Section 5.10.8.2.2. The basic development lengths for deformed bars in compression are shown in Appendix 5.1-A5. These values may be modified as described in AASHTO. However, the minimum development length shall be 1′-0″.

5.1.2.C.3 *Tension Development Length of Standard Hooks*

Standard hooks are used to develop bars in tension where space limitations restrict the use of straight bars. Development of standard hooks in tension shall be in accordance with AASHTO LRFD Section 5.10.8.2.4. Tension development lengths of 90° & 180° standard hooks are shown in Appendix 5.1-A6.

5.1.2.D Splices

The Contract Plans shall clearly show the locations and lengths of splices. Splices shall be in accordance with AASHTO LRFD Section 5.10.8.4.

Lap splices, for either tension or compression bars, shall not be less than 2′-0″.

5.1.2.D.1 *Tension Lap Splices*

Many of the same factors which affect development length affect splices. Consequently, tension lap splices are a function of the bar's development length, l_d. There are two classes of tension lap splices: Class A and B. Designers are encouraged to splice bars at points of minimum stress and to stagger lap splices along the length of the bars.

Appendix 5.1-A7 shows tension lap splices for both uncoated and epoxy coated Grade 60 bars for normal weight concrete with specified strengths of 4.0 to 6.0 ksi.

5.1.2.D.2 *Compression Lap Splices*

Compression lap splice lengths are shown in Appendix 5.1-A5 for concrete strengths greater than or equal to 3.0 ksi.

5.1.2.D.3 *Mechanical Splices*

Mechanical splices are proprietary splicing mechanisms. The requirements for mechanical splices are found in *Standard Specifications* Section 6-02.3(24)F and in AASHTO LRFD Sections 5.5.3.4 and 5.10.8.4.2b.

5.1.2.D.4 *Welded Splices*

AASHTO LRFD Section 5.10.8.4.2c describes the requirements for welded splices. On modifications to existing structures, welding of reinforcing bars may not be possible because of the non-weldability of some steels.

5.1.2.E Hooks and Bends

For hook and bend requirements, see AASHTO LRFD Section 5.10.2. Standard hooks and bend radii are shown in Appendix 5.1-A1 for steel reinforcing bars with yield strengths up to 100 ksi. Additional tie reinforcement may be required to anchor hooked bars when the yield strength exceeds 75 ksi.

When specifying and detailing galvanized reinforcing, designers should consider that larger bend diameters will be provided if the contractor elects to galvanize bars after fabrication. These diameters (see ASTM A 767) differ from standard CRSI requirements for 180 degree hooks on #7 and #8 bars and all stirrup/tie hooks.

When using GFRP bars, detailed bends should be avoided where possible. If bent bars are necessary, they should be coordinated with suppliers during design. Headed bar may be an acceptable alternative.

5.1.2.F Fabrication Lengths

Reinforcing bars are available in standard mill lengths of 40′ for bar sizes #3 and #4 and 60′ for bar sizes of #5 and greater. Designers shall limit reinforcing bar lengths to the standard mill lengths. Because of placement considerations, designers should consider limiting the overall lengths of bar size #3 to 30′ and bar size #5 to 40′.

Spirals of bar sizes #4 through #6 are available on 5,000 lb coils. Spirals should be limited to a maximum bar size of #6.

Straight galvanized reinforcing bars should be limited to a 40’ maximum length.

Straight stainless steel reinforcing bars should be limited to a 40’ maximum length for #3-#18 bar.

Corrosion resistant reinforcing (ASTM A 1035) is available in 60’ lengths for #4-#18 bar.

GFRP reinforcing bars should be limited to a 40’ maximum length.

For some materials, longer bars are possible. But the designer should coordinate with suppliers during design prior to specifying them. Longer bars can increase lead time and/or limit suppliers. Optional lap splices should be provided at the recommended maximum bar length where possible.

5.1.2.G Placement

Placement of reinforcing bars can be a challenge during construction. If reinforcement is congested, as is common in column joints, additional details are recommended in the contract plans showing how each bar is placed. Appendix 5.1-A2 shows the minimum clearance and spacing of reinforcement for beams and columns. High-strength reinforcement is one possible method to reduce congestion.

5.1.2.H Joint and Corner Details

5.1.2.H.1 *T-Joint*

The forces form a tension crack at 45° in the joint. Reinforcement as shown in Figure 5.1.2-1 is more than twice as effective in developing the strength of the corner than if the reinforcement was turned 180°.

Figure 5.1.2-1 T-Joint Reinforcing Details

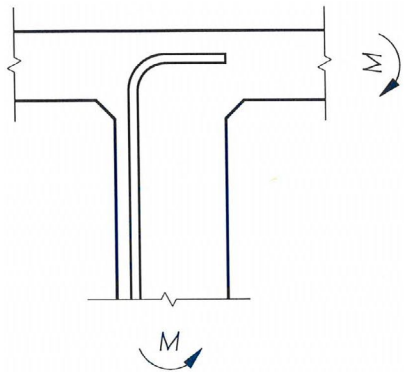

5.1.2.H.2 *"Normal" Right Corners*

Corners subjected to bending as shown in Figure 5.1.2-2 will crack radially in the corner outside of the main reinforcing steel. Smaller size reinforcing steel shall be provided in the corner to distribute the radial cracking.

Figure 5.1.2-2 "Normal" Right Corner Reinforcing Details

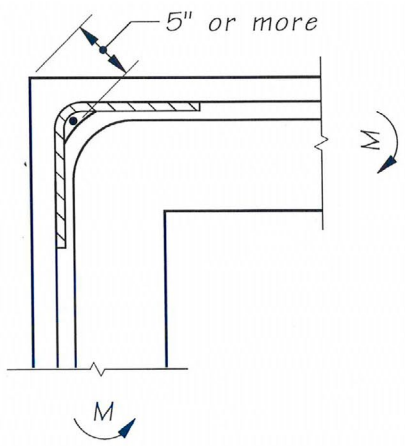

5.1.2.H.3 *Right or Obtuse Angle Corners*

Corners subjected to bending as shown in Figure 5.1.2-3 tend to crack at the reentrant corner and fail in tension across the corner. If not properly reinforced, the resisting corner moment may be less than the applied moment.

Reinforced as shown in Figure 5.1.2-3, but without the diagonal reinforcing steel across the corner, the section will develop 85 percent of the ultimate moment capacity of the wall. If the bends were rotated 180°, only 30 percent of the wall capacity would be developed.

Adding diagonal reinforcing steel across the corner, approximately equal to 50 percent of the main reinforcing steel, will develop the corner strength to fully resist the applied moment. Extend the diagonal reinforcement past the corner each direction for anchorage. Since this bar arrangement will fully develop the resisting moment, a fillet in the corner is normally unnecessary.

Figure 5.1.2-3 Right or Obtuse Angle Corner Reinforcing Details

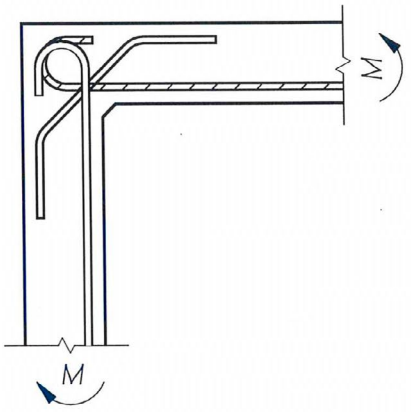

5.1.2.I Welded Wire Reinforcement

Welded wire reinforcement may be used to replace steel reinforcing bars in prestressed concrete girders, precast buried structures walls, barriers, and precast deck panels.

Welded wire shall be deformed and shall conform to the requirements of AASHTO M336/ ASTM A 1064. Epoxy-coated wire and welded wire reinforcement shall conform to *Standard Specifications* Section 9-07.3 with the exception that ASTM A884 Class A Type I shall be used instead of ASTM A775. Galvanized welded wire reinforcement shall conform to the requirements of ASTM A1060. Stainless steel welded wire reinforcement shall conform to the requirements of ASTM A1022.

Welded wire reinforcement shall be deformed. The specified minimum yield strength shall be limited to a maximum of 75 ksi.

Longitudinal wires and welds shall be excluded from regions with high shear demands, including girder webs, and are limited to the flange areas as described in AASHTO LRFD Section 5.8.2.8. Longitudinal wires for anchorage of welded wire reinforcement shall have an area of 40 percent or more of the area of the wire being anchored as described in ASTM A497 but shall not be less than D4.

5.1.2.J Headed Steel Reinforcing Bars

Headed steel reinforcing bars conforming to ASTM A970 Class HA may be used to develop reinforcement in tension. Use and development length shall be in accordance with ACI 318 (see Section 25.4.4 for development length). Minimum concrete cover and clearances to headed steel reinforcing bars shall also be provided to the outermost part of the head of the bar. Designers shall provide main bar (unheaded portion) location requirements in contract documents and verify that cover and clearance requirements to the head of the bar can be satisfied. ASTM A970 Class HA requires that the net bearing area of the head shall not be less than four times the nominal cross-sectional area of the bar. However, the head shape and an upper limit to the head net bearing area are not specified. A gross head area of ten times the bar area (a net bearing area of the head of nine times the bar area) could be used as an estimate of the upper limit of the head area.

5.1.3 Prestressing Steel

5.1.3.A General

Three types of high-tensile steel used for prestressing steel are:

1. **Strands**
   AASHTO M 203 Grade 270, low relaxation
2. **Bars**
   AASHTO M 275 Type II
3. **Parallel Wires**
   AASHTO M 204 Type WA

All WSDOT designs are based on low relaxation strands using either 0.5″ or 0.6″ diameter strands for girders, and ⅜″ or 7⁄16″ diameter strands for stay-in-place precast deck panels. Properties of uncoated and epoxy-coated prestressing stands are shown in Appendix 5.1-A8. 0.62″ and 0.7″ diameter strands may be used for top temporary strands in prestressed concrete girders when 10 0.6” diameter temporary top strands are not sufficient for temporary handling cases.

Provide adequate concrete cover and consider use of epoxy coated prestressing reinforcement in coastal areas or where members are directly exposed to salt water.

5.1.3.B Stress Limits

Stress limits for prestressing steel are as listed in AASHTO LRFD Section 5.9.2.2.

5.1.3.C Prestressing Strands

Standard strand patterns for all types of WSDOT prestressed concrete girders are shown on the Bridge Standard Drawings website (www.wsdot.wa.gov/Bridge/Structures/StandardDrawings.htm).

5.1.3.C.1 *Straight Strands*

The position of the straight strands in the bottom flange is standardized for each girder type.

5.1.3.C.2 *Harped Strands*

The harped strands are bundled between the harping points (the 0.4 and 0.6 points of the girder length). The girder fabricator shall select a bundle configuration that meets plan centroid requirements.

There are practical limitations to how close the centroid of harped strands can be to the bottom of a girder. The minimum design value for this shall be determined using the following guide: Up to 12 harped strands are placed in a single bundle with the centroid 4″ above the bottom of the girder. Additional strands are placed in twelve-strand bundles with centroids at 3″ spacing vertically upwards.

At the girder ends, the strands are splayed to a normal pattern. The centroid of strands at both the girder end and the harping point may be varied to suit girder stress requirements.

The slope of any individual harped strands shall not be steeper than 8 horizontal to 1 vertical for 0.6″ diameter strands, and 6 horizontal to 1 vertical for 0.5″ diameter strands.

The harped strand exit location at the girder ends shall be held as low as possible while maintaining the concrete stresses within allowable limits.

5.1.3.C.3 *Temporary Strands*

Temporary strands in the top flanges of prestressed concrete girders may be required for stability (see Section 5.6.3). These strands shall be considered to be pretensioned for design purposes, but may be post-tensioned at the manufacturer's discretion depending on pretensioning bed capacity. If the strands are post-tensioned, calculations shall be provided by the manufacturer considering the timing of post-tensioning (before or after lifting from the form). It is more efficient to post-tension the strands after removal of the girder from the form if they are not needed for stability during lifting. The calculations shall consider the effects on camber from any revisions to the concrete strength at transfer and timing of post-tensioning. In no case shall the temporary top strands be post-tensioned more than 48 hours after transfer of permanent pretensioning. These strands can be considered in design to reduce the required strength at release, to provide stability during handling and shipping, and to reduce the “A” dimension. These strands must be cut before the CIP intermediate diaphragms are placed.

5.1.3.D Development of Prestressing Strand

5.1.3.D.1 *General*

Development of prestressing strand shall be as described in AASHTO LRFD Section 5.9.4.3.

The development length of bonded uncoated & coated prestressing strands are shown in Appendix 5.1-A8.

5.1.3.D.2 *Partially Debonded Strands*

Where it is necessary to prevent a strand from actively supplying prestress force near the end of a girder, it shall be debonded. This can be accomplished by taping a close fitting PVC tube to the stressed strand from the end of the girder to some point where the strand can be allowed to develop its load. Since this is not a common procedure, it shall be carefully detailed on the plans. It is important when this method is used in construction that the taping of the tube is done in such a manner that concrete cannot leak into the tube and provide an undesirable bond of the strand.

Partially debonded strands shall meet the requirements of AASHTO LRFD Section 5.9.4.3.3.

5.1.3.D.3 *Strand Development Outside of Prestressed Concrete Girders*

Extended bottom prestressing strands are used to connect the ends of girders with diaphragms and resist loads from creep effects, shrinkage effects, positive moments due to seismic demand at fixed piers, and seismic connection forces at the abutments on single span bridges.

Extended strands must be developed in the short distance within the diaphragm. Strands shall be extended as far across the diaphragm as practical. And for fixed pier diaphragms or continuity diaphragms they shall be anchored at least 1'-9" from the girder end. The pattern of extended strands and embedded length of extended strands shall be sufficient to resist concrete breakout from the face of the crossbeam, while at the same time minimizing congestion. An explicit concrete breakout check may be unnecessary when all strands are effectively spliced across a crossbeam.

Strands shall be anchored with a strand chuck as shown in Figure 5.1.3-1. Strand chucks shall be a minimum 1$^{11}/_{16}$"ø barrel anchor or similar. The designer shall calculate the number of extended straight strands needed to develop the required moment capacity at the end of each girder. The number of extended strands shall not be less than four.

For fixed intermediate piers in Seismic Design Categories B-D at the Extreme Event I limit state, the girder anchorage with extended strands shall be sufficient to carry a calculated fraction of the plastic overstrength moment demand originating from the nearest column. The required number of extended strands, N_{ps}, for each girder shall be calculated using the following:

$$N_{ps} \geq \frac{M_{u,i}}{0.9\phi A_{ps} f_{py} d} \geq 4 \quad (5.1.3\text{-}1)$$

Where:

Mu,i = Design moment at the end of each girder (kip-in)
Aps = Area of each extended strand (in^2)
fpy = Yield strength of prestressing steel (ksi)
d = Distance from top of deck slab to c.g. of extended strands (in)
ϕ = Flexural resistance factor, 1.0

The design moment at the end of each girder shall be calculated using the following:

$$M_{u,i} = M_{g,i} - 0.9M_{SIDL} \quad (5.1.3\text{-}2)$$

Where:

Mg,i = The moment demand due to column plastic overstrength in girder i caused by the longitudinal seismic demands (kip-in)
MSIDL = Moment demand due to super imposed dead loads (traffic barrier, sidewalk, etc.) per girder (k-in.)

For spliced prestressed concrete girders, where post-tensioning tendons are installed over intermediate piers, $M_{u,i}$ shall be modified to account for induced moments.

The moment demand due to column plastic overstrength in each girder shall either be determined from the table in Appendix 5.1-A9 or Equation 5.1.3-3. This methodology assumes half the column plastic overstrength moment is resisted by the girders on each side of the column.

$$M_{g,i} = KM_{CG} \frac{sinh\left(\frac{\lambda L_{cb}}{2N_L}\right)}{sinh(\lambda L_{cb})} cosh\left[\lambda L_{cb}\left(1 - \frac{L_{cb,i}}{L_{cb}}\right)\right] \quad (5.1.3\text{-}3)$$

Where:

K = Span moment distribution factor. If the span lengths differ, the moment contribution to each span should be modified in accordance with the span lengths, using K_1 and K_2 as shown in Figure 5.1.3-2; otherwise K = 0.5.
MCG = Moment generated by a single column due to the column plastic overstrength and acting at the center of gravity of the superstructure. See Equation 5.1.3-4 (kip-in.)
Lcb,i = Distance from the centerline of nearest column to centerline of the girder (ft.)
λ*Lcb* = Ratio of total stiffness of all girders (within a half column spacing or overhang) to torsional stiffness of half the total length of the crossbeam or half the column spacing. See Equation 5.1.3-5.
Lcb = Half of the crossbeam length for single column bents, or half the column spacing or overhang length for multi-column bents (ft.)
NL = The number of contributing girder lines taken as L_{cb}/S.
S = Girder spacing (ft.)

The moment demand at the center of gravity of the superstructure for each column shall be calculated using the following:

$$M_{CG} = M_{po}^{top} + \frac{M_{po}^{top} + M_{po}^{base}}{L_c} h \quad (5.1.3\text{-}4)$$

Where:

M_{po}^{top} = Plastic overstrength moment at top of column, kip-in
M_{po}^{base} = Plastic overstrength moment at base of column (kip-in.)
h = Distance from top of column to C.G. of superstructure (ft.)
L_c = Column clear height, used to determine overstrength shear associated with the overstrength moment (ft.)

The total girder stiffness to crossbeam stiffness ratio shall be calculated using the following:

$$\lambda L_{cb} = \sqrt{\left(\frac{\alpha EI}{L_g}\right)\frac{2N_L}{(GJ/L_{cb})}} \quad (5.1.3\text{-}5)$$

Where:

= 3 for girders in which far end is free to rotate (expansion piers); and 4 for girders in which far end is fixed against rotation (continuous piers).

EI = Flexural stiffness of one girder, including composite deck (kip-in.^{2})

GJ = Torsional stiffness of the crossbeam cross-section (kip-in^2)

L_g = Girder span length if girders frame into the crossbeam from only one side;

= $\frac{2}{\left(1/L_1 + 1/L_2\right)}$, if girders frame into the crossbeam from both sides, where L_1 and L_2 are individual girder span lengths (ft.)

For dropped (two-stage) prismatic crossbeams, the moment distribution is likely to be nearly uniform. For raised (flush) crossbeams, it is likely that λL_{cb} will be > 1.0 and the moment distribution will not be uniform. For tapered crossbeams, Equation 5.1.3-2 may be used if the torsional stiffness is initially defined by the deepest section of the crossbeam, and λL_{cb} is then increased by 20%. This will lead to a less uniform distribution of girder moments than that found with a prismatic crossbeam.

A slight downwards adjustment in the number of extended strands for an individual girder is acceptable if the sum of the adjusted total moment resistance is greater than the ideal total moment resistance. Girders closer to the pier columns shall not have fewer strands than the ideal number required. When girder designs in a span are otherwise identical, the pattern and number of extended strands should also be identical, using the largest number of strands required for any girder.

For cases with uneven girder spacings or girders centered on columns, the designer shall verify that the total combined moment resistance of all girders within the tributary region of the column is greater than the total moment demand at the superstructure CG minus the total factored superimposed dead load moments.

Figure 5.1.3-1 Strand Development

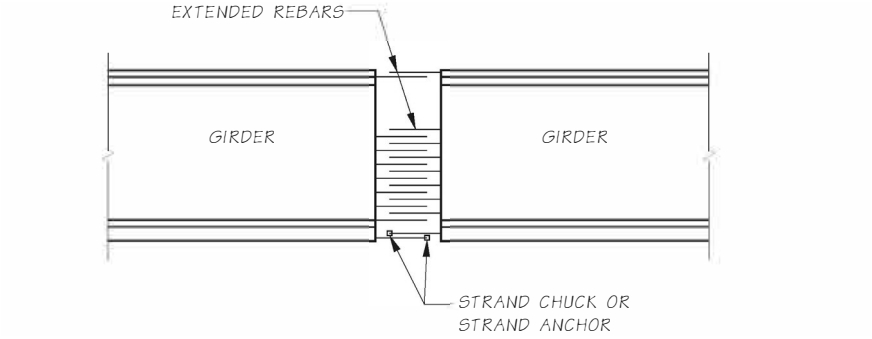

Figure 5.1.3-2 Extended Strand Design

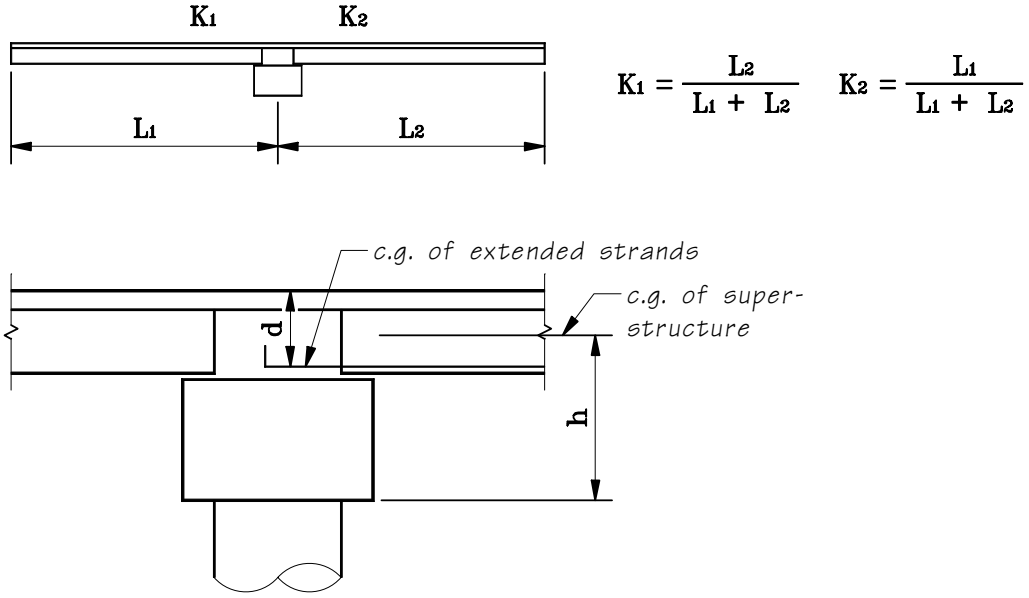

Anchorage of extended strands is essential for all prestressed concrete girder bridges with fixed diaphragms at intermediate piers. Extended strand anchorage may be achieved by directly overlapping extended strands, by use of strand, by the use of the crossbeam ties along with strand ties, or by a combination of all three methods. The following methods in order of hierarchy shall be used for all prestressed concrete girders for creating continuity of extended strands:

Method 1 – Direct extended strands overlapping shall be used at intermediate piers without any angle point due to horizontal curvature and for any crossbeam width. This is the preferred method of achieving extended strand continuity. Congestion of reinforcement and girder setting constructability shall be considered when large numbers of extended strands are required. In these cases, strand ties may be used in conjunction with extended strands. See Figure 5.1.3-3

Figure 5.1.3-3 Overlapping Extended Strands

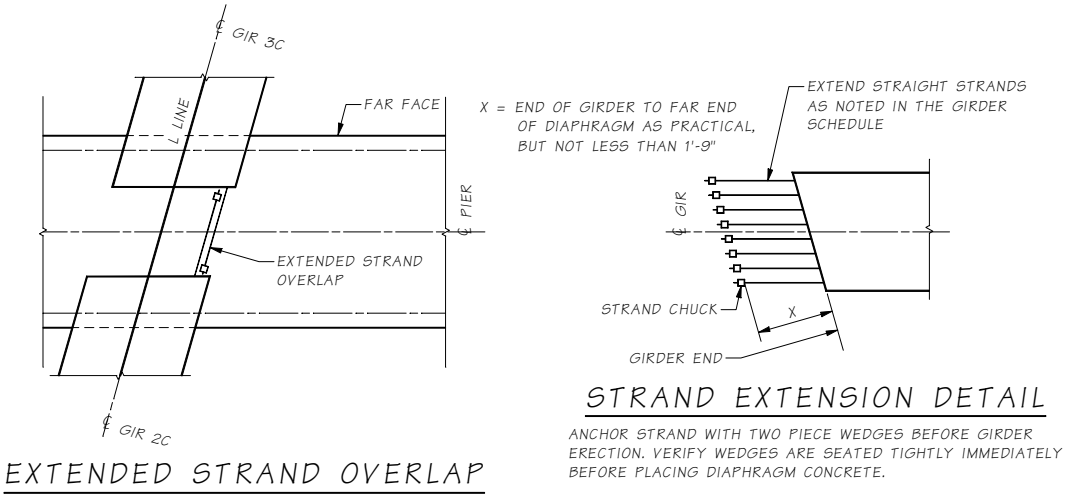

Method 2 – Strand ties shall be used at intermediate piers with a girder angle point due to horizontal curvature where extended strands are not parallel and would cross during girder placement. Crossbeam widths shall be greater than or equal to 6 feet measured along the skew. It is preferable that strand ties be used for all extended strands, however if the region becomes too congested for rebar placement and concrete consolidation, additional forces may be carried by crossbeam ties up to a maximum limit as specified in equation 5.1.3-6. See Figure 5.1.3-4.

Figure 5.1.3-4 Stand Ties

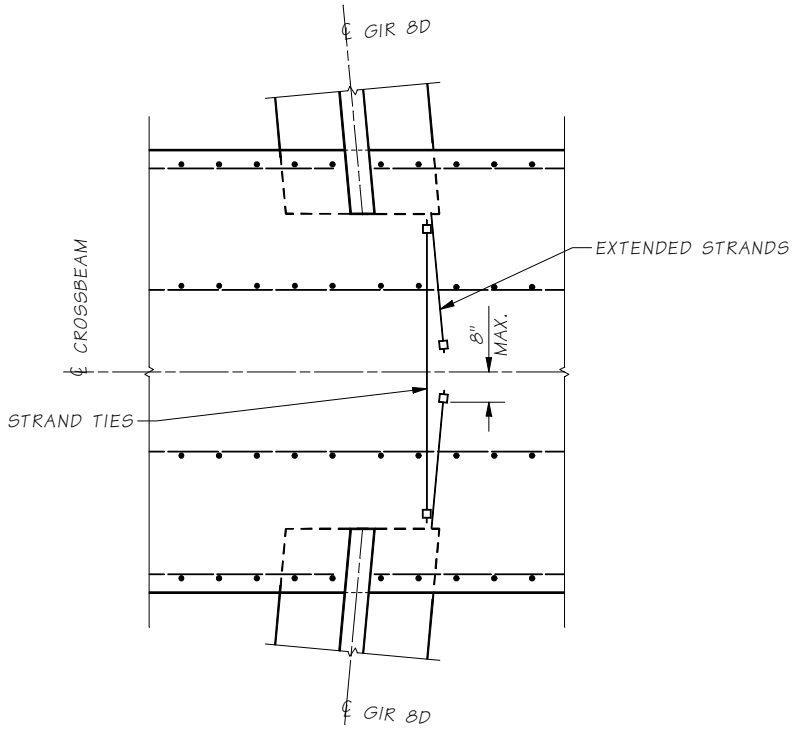

STRAND TIE DETAIL

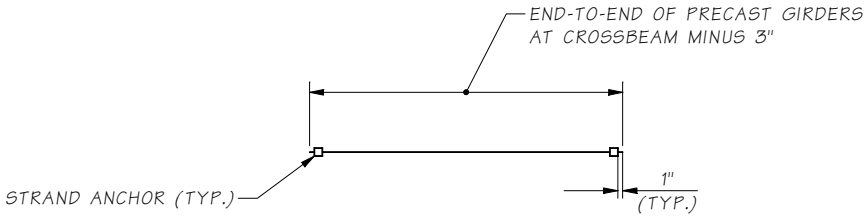

STRAND TIE GEOMETRY

Method 3 – For crossbeams with widths less than 6′ and a girder angle point due to horizontal curvature, strand ties shall be used if a minimum of 8″ of lap can be provided between the extended strand and strand tie. In this case the strand ties shall be considered fully effective. For cases where less than 8″ of lap is provided, the effectiveness of the strand tie shall be reduced proportional to the reduction in lap. All additional forces not taken by strand ties must be carried by crossbeam ties up to the maximum limit as specified in equation 5.1.3-6. If this limit is exceeded, the geometry of the width of the crossbeam shall be increased to provide sufficient lap for the strand ties. See Figure 5.1.3-5.

The area of transverse ties considered effective for strand ties development in the lower crossbeam (*As*) shall not exceed:

$$A_s = \frac{1}{2}\left(\frac{A_{ps} f_{py} N_{ps}}{f_{ye}}\right) \quad (5.1.3\text{-}6)$$

Where:

Aps = Area of strand ties (in^2)
fpy = Yield strength of extended strands (ksi)
Nps = Number of extended strands that are spliced with strand and crossbeam ties
fye = Expected yield strength of transverse tie reinforcement (ksi)

Two-thirds of A_s shall be placed directly below the girder and the remainder of A_s shall be placed outside the bottom flange width as shown in Figure 5.1.3-5.

The size of strand ties shall be the same as the extended strands, and shall be placed at the same level and proximity of the extended strands.

Figure 5.1.3-5 Lower Crossbeam Ties

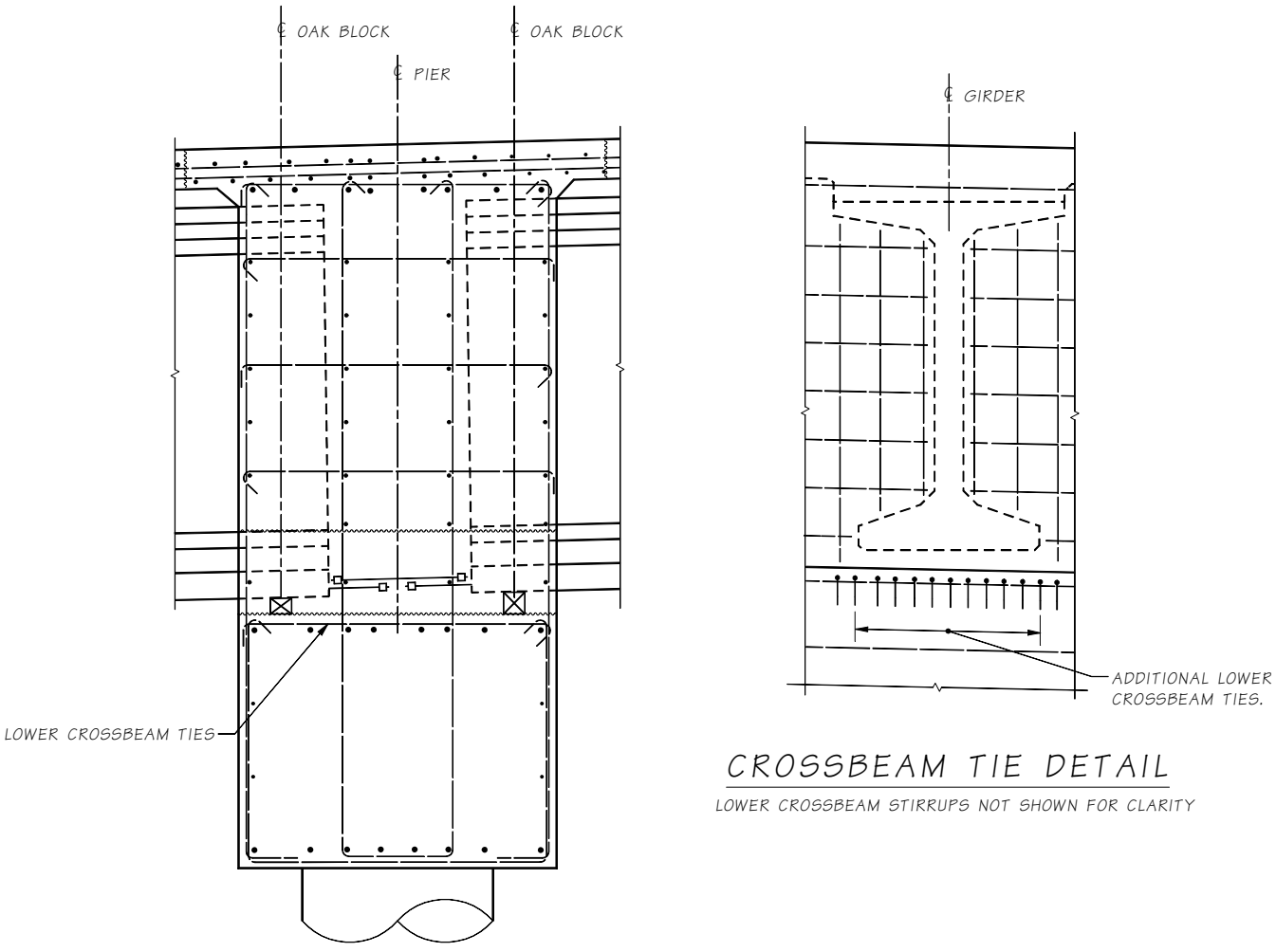

5.1.4 Prestress Losses

AASHTO LRFD outline the method of predicting prestress losses for usual prestressed concrete bridges that shall be used in design except as noted below.

5.1.4.A Instantaneous Losses

5.1.4.A.1 *Elastic Shortening of Concrete*

Transfer of prestress forces into the prestressed concrete girder ends results in an instantaneous elastic loss. The prestress loss due to elastic shortening shall be added to the time dependent losses to determine the total losses. The loss due to elastic shortening shall be taken as in accordance with AASHTO LRFD Section 5.9.3.2.3.

For pre-tensioned member and low-relaxation strands, f_{cgp} may be calculated based on $0.7f_{pu}$. For post-tensioned members with bonded tendons, f_{cgp} may be calculated based on prestressing force after jacking at the section of maximum moment.

5.1.4.A.2 *Anchorage Set Loss*

The anchor set loss for multi-strand tendons should be based on ⅜″ slippage for design purposes. For long tendons where the stress along the tendon at jacking may be approximated as linear, anchor set loss and the length affected by anchor set loss may be calculated as shown in Figure 5.1.4-1.

$$x = \sqrt{\frac{\Delta_{set} A_{PT} E_p L}{P_{j\text{-}left} - P_{j\text{-}right}}} \quad (5.1.4\text{-}1)$$

$$\Delta f_{pA} = \frac{2x\left(P_{j\text{-}left} - P_{j\text{-}right}\right)}{A_{PT} L} \quad (5.1.4\text{-}2)$$

Figure 5.1.4-1 Anchorage Set Loss

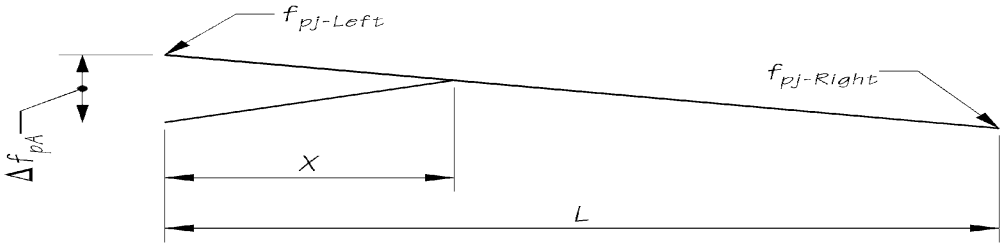

5.1.4.A.3 *Friction Losses*

Friction losses occurring during jacking and prior to anchoring depend on the system and materials used. For a rigid spiral galvanized ferrous metal duct system, μ shall be 0.20 and *K* = 0.0002. For plastic ducts, the designer shall use the values shown in AASHTO LRFD Table 5.9.3.2.2b.

To avoid the substantial friction loss caused by sharp tendon curvature in the end regions where the tendons flare out from a stacked arrangement towards the bearing plates, use 0.10 times the span length or 20 feet as the minimum flare zone length. The recommended minimum radius (horizontal or vertical) of flared tendons is 200 feet. In the special cases where sharp curvature cannot be avoided, extra horizontal and vertical ties shall be added along the concave side of the curve to resist the tendency to break through the web.

$$\Delta f_{pF} = f_{pj}\left(1 - e^{-(kx+\mu\alpha)}\right) \quad (5.1.4\text{-}3)$$

When summing the α angles for total friction loss along the structure, horizontal curvature of the tendons as well as horizontal and vertical roadway curvature shall be included in the summation. The α angles for horizontally and vertically curved tendons are shown in Figure 5.1.4-2.

Figure 5.1.4-2 The α Angles for Curved PT Tendons

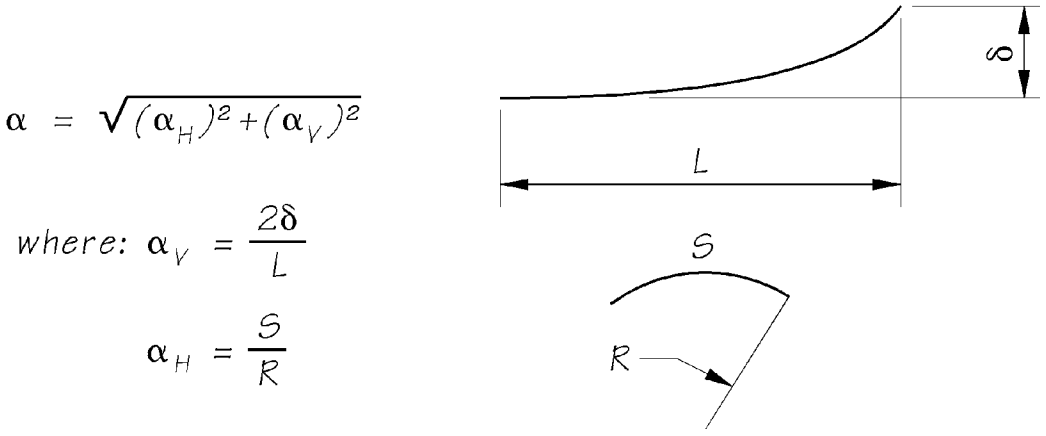

5.1.4.B Approximate Estimate of Time-Dependent Losses

The Approximate Estimate of Time-Dependent Losses of AASHTO LRFD Section 5.9.3.3 may be used for preliminary estimates of time-dependent losses for prestressed concrete girders with composite decks as long as the conditions set forth in AASHTO are satisfied.

5.1.4.C Refined Estimates of Time-Dependent Losses

Final design calculations of time-dependent prestress losses shall be based on the Refined Estimates of Time-Dependent Losses of AASHTO LRFD Section 5.9.3.4.

5.1.4.D Total Effective Prestress

For standard precast, pre-tensioned members with CIP deck subject to normal loading and environmental conditions and pre-tensioned with low relaxation strands, the total effective prestress may be estimated as:

$$f_{pe} = f_{pj} - \Delta f_{pT} - \Delta f_{pES} - \Delta f_{pED} - \Delta f_{pSS} \quad (5.1.4\text{-}4)$$

The total prestress loss may be estimated as:

$$\Delta f_{pT} = \Delta f_{pRO} + \Delta f_{pLT} \quad (5.1.4\text{-}5)$$

Initial relaxation that occurs between the time of strand stressing and prestress transfer may be estimated as:

$$\Delta f_{pRO} = \frac{log(24t)}{40}\left(\frac{f_{pj}}{f_{py}} - 0.55\right) f_{pj} \quad (5.1.4\text{-}6)$$

Where:

t = Duration of time between strand stressing and prestress transfer, typically 1 day
fpj = Jacking stress
fpy = Yield strength of the strand

Long term time dependent losses, Δ*fpLT*, are computed in accordance with the refined estimates of AASHTO LRFD Section 5.9.3.4 or a detailed time-step method. Elastic gain due to deck shrinkage shall be considered separately.

Elastic shortening, Δ*fpES*, is computed in accordance with AASHTO LRFD Section 5.9.3.2.3a.

The elastic gain due to deck placement, superimposed dead loads and live loads is taken to be:

$$\Delta f_{pED} = \frac{E_p}{E_c}\left[-\frac{(M_{slab}+M_{diaphragms})e_{ps}}{I_g} - \frac{(M_{sidl}+\gamma_{LL}M_{LL+IM})(Y_{bc}-Y_{bg}+e_{ps})}{I_c}\right] \quad (5.1.4\text{-}7)$$

Where:

Ep = Modulus of elasticity of the prestressing strand
Ec = Modulus of elasticity of the concrete at the time of loading
Mslab = Moment caused by deck slab placement
Mdiaphragms = Moment caused by diaphragms and other external loads applied to the non-composite girder section
Msidl = Moment caused by all superimposed dead loads including traffic barriers and overlays
M*LL+IM* = Moment caused by live load and dynamic load allowance
γ*LL* = Live load factor (1.0 for Service I and 0.8 for Service III)
eps = Eccentricity of the prestressing strand
Ig = Moment of inertia of the non-composite girder
Ic = Moment of inertia of the composite girder
Ybg = Location of the centroid of the non-composite girder measured from the bottom of the girder
Ybc = Location of the centroid of the composite girder measured from the bottom of the girder

The elastic gain due to slab shrinkage, Δ*fpSS*, shall be computed in accordance with AASHTO LRFD Section 5.9.3.4.3d. Deck shrinkage shall be considered as an external force applied to the composite section for the Service I, Service III, and Fatigue I limit states. This force is applied at the center of the deck with an eccentricity from the center of the deck to the center of gravity of the composite section. This force causes compression in the top of the girder, tension in the bottom of the girder, and an increase in the effective prestress force (an elastic gain). The deck shrinkage strain shall be computed as 50 percent of the strain determined by AASHTO LRFD Equation 5.4.2.3.3-1.

5.1.4.E Temporary Losses

For checking stresses during release, lifting, transportation, and erection of prestressed concrete girders, the elastic and time-dependent losses may be computed based on the following assumptions.

5.1.4.E.1 *Lifting of Girders From Casting Beds*

For normal construction, forms are stripped and girders are lifted from the casting bed within one day.

5.1.4.E.2 *Transportation*

Girders are most difficult to transport at a young age. The hauling configuration causes reduced dead load moments in the girder and the potential for overstress between the harping points. Overstress may also occur at the support points depending on the prestressing and the trucking configuration. This is compounded by the magnitude of the prestress force not having been reduced by losses. For an aggressive construction schedule girders are typically transported to the job site around day 10.

When losses are estimated by the Approximate Estimate of AASHTO LRFD Section 5.9.3.3, the losses at the time of hauling may be estimated by:

$$\Delta f_{pTH} = \Delta f_{pRO} + \Delta f_{pES} + \Delta f_{pH} \qquad (5.1.4\text{-}8)$$

Where:

Δf_{pTH} = total loss at hauling

Δf_{pH} = time dependent loss at time of hauling = $3\frac{f_{pi}A_{ps}}{A_g}\gamma_h\gamma_{st} + 3\gamma_h\gamma_{st} + 0.6$

5.1.4.E.3 *Erection*

During construction, the non-composite girders must carry the full weight of the deck slab and interior diaphragms. This loading typically occurs around 120 days for a normal construction schedule.

5.1.4.E.4 *Final Configuration*

The composite slab and girder section must carry all conceivable loads including superimposed dead loads such as traffic barriers, overlays, and live loads. It is assumed that superimposed dead loads are placed at 120 days and final losses occur at 2,000 days.

5.1.5 Post-tensioning Systems

Multistrand grouted tendons with steel strand are the preferred system for post-tensioned concrete bridge superstructures, spliced girders, and bridge components. For post-tensioned concrete bridge decks, unbonded single strand post tensioning systems may be used. The use of other post-tensioning systems and materials shall require the approval of the Bridge Design Engineer.

Multistrand and grouted post-tensioning systems for permanent construction shall be designed and constructed in accordance with Protection Level 2 (PL-2) practices, as defined by the requirements of PTI/ASBI M50.3-19 *Specification for Multistrand and Grouted Post-Tensioning* and PTI M55.1-19 *Specification for Grouting of Post-Tensioned Structures*. Unbonded single strand post-tensioning systems shall be designed and constructed in accordance with PTI M10.2-17 *Specification for Unbonded Single Strand Tendons*.

Designers should consult post-tensioning system supplier product guides to ensure that multiple suppliers can satisfy the design. Corrugated plastic duct shall be used and shall conform to standard sizes where possible. Common post-tensioning system component sizes and combinations are shown in Table 5.1.5-1. The nominal diameter for plastic duct may be used when interpreting code provisions that reference duct size or diameter without further clarification (i.e. inside diameter, outside diameter, etc.). The interior diameter of plastic duct shall be used when interpreting code provisions that reference duct area without further clarification.

Table 5.1.5-1 Post-tensioning System Sizes

Duct Size (Round)	ID	OD	Corrug. Dia.	Max # Strands (Pull, 0.6”ø)	Max # Strands (Push, 0.6”ø)	Common Anchorage Size (0.6”ø)
3"	2.99”	3.19”	3.63”	12	16	12
3-⅜"	3.35”	3.55”	3.94”	16	20	15, 19
4"	3.93”	4.29”	4.63”	22	27	19, 22
4-½"	4.49”	4.80”	5.28”	29	36	27

Dead end anchorages, defined as anchorages that are not accessible during stressing, shall be avoided where possible. Anchorage pourback materials shall be specified in the plans and should be concrete where possible. Epoxy grout may be used in exposed areas or where improved bond is needed. Non-shrink grout may be specified for small protected pourbacks where proper grout confinement is provided.

5.2 Design Considerations

5.2.1 Service and Fatigue Limit States

5.2.1.A General

Service limit state is used to satisfy stress limit, deflection, and control of cracking requirements. Design aids for tensile stress in reinforcement at the service limit state, f_{ss}, are provided in Appendices 5.2-A1, 5.2-A2, and 5.2-A3.

5.2.1.B Control of Cracking

Reinforcement shall be provided and spaced to meet the requirements in AASHTO LRFD Section 5.6.7 "Control of Cracking by Distribution of Reinforcement." The exposure factor shall be based upon a Class 2 exposure condition.

5.2.1.C Stress Limits in Prestressed Concrete Members

Allowable concrete stresses for the service and fatigue limit states are shown in Table 5.2.1-1. For prestressed concrete girders, the concrete stress limits shall be satisfied at all pre-service stages of girder construction and in service in accordance with Section 5.6.2.C. The tensile stress in the precompressed tensile zone for the final service load condition (Service III) is limited to zero. This prevents cracking of the concrete during the service life of the structure and provides additional stress and strength capacity for overloads.

The controlling locations for temporary compressive stress with and without lateral bending are shown in Figure 5.2.1-1.

For tensile stress limits that require bonded reinforcement sufficient to resist the tensile force in the concrete, the tensile force shall be computed using the procedure illustrated in Figure 5.2.1-2 assuming an uncracked section. The bonded reinforcement is proportioned using a stress of 0.5fy, not to exceed 30 ksi. Individual reinforcing bars are only considered if they are fully developed and are located within the tensile stress region of the member.

The variable λ is the concrete density modification factor calculated in accordance with AASHTO LRFD Section 5.4.2.8.

For precast prestressed segments that are continuous over supports, such as in spliced girders, the tensile stress limits at service limit states shall apply for the precast segment, but need not be applied to a CIP bridge deck.

Table 5.2.1-1 Stress Limits in Prestressed Concrete Members

Condition	Stress	Location	Stress Limit (ksi)
Temporary Stress at Transfer and Lifting from Casting Bed	Tensile	In areas without bonded reinforcement sufficient to resist the tensile force in the concrete	$0.0948\lambda\sqrt{f'_{ci}} \leq 0.2$
		In areas with bonded reinforcement sufficient to resist the tensile force in the concrete	$0.24\lambda\sqrt{f'_{ci}}$
	Compressive	All areas (except as noted below)	$0.65f'_{ci}$
		At section extremities (i.e. flange tips) during handling when lateral bending is explicitly considered	$0.70\ f'_{ci}$
Temporary Stress at Shipping and Erection	Tensile	In areas without bonded reinforcement sufficient to resist the tensile force in the concrete	$0.0948\ \lambda\ \sqrt{f'_c}$ (*ksi*)
		In areas with bonded reinforcement sufficient to resist the tensile force in the concrete	$0.24\lambda\sqrt{f'_c}$
	Compressive	All areas (except as noted below)	$0.65f'_c$
		At section extremities (i.e. flange tips) during handling when lateral bending is explicitly considered	$0.70\ f'_c$
Final Stresses at Service Limit State	Tensile	All Locations	0.0
	Compressive	All areas due to effective prestress and permanent loads	$0.45f'_c$
		All areas, due to effective prestress, permanent loads and transient (live) loads	$0.60f'_c$
Final Stresses at Fatigue Limit State	Compressive	All areas due to the Fatigue I Load Combination plus one-half the sum of effective prestress and permanent loads in accordance with AASHTO LRFD Section 5.5.3.1	$0.40f'_c$

Figure 5.2.1-1 Temporary Compressive Stress Limits With and Without Lateral Bending

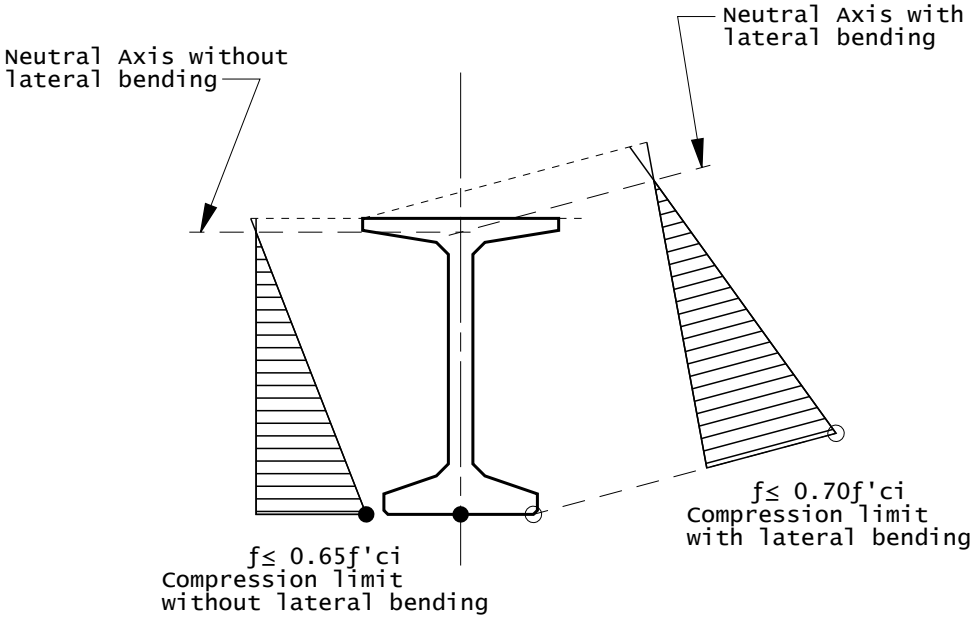

Figure 5.2.1-2 Bonded Reinforcement for Increased Temporary Tensile Stress Limit

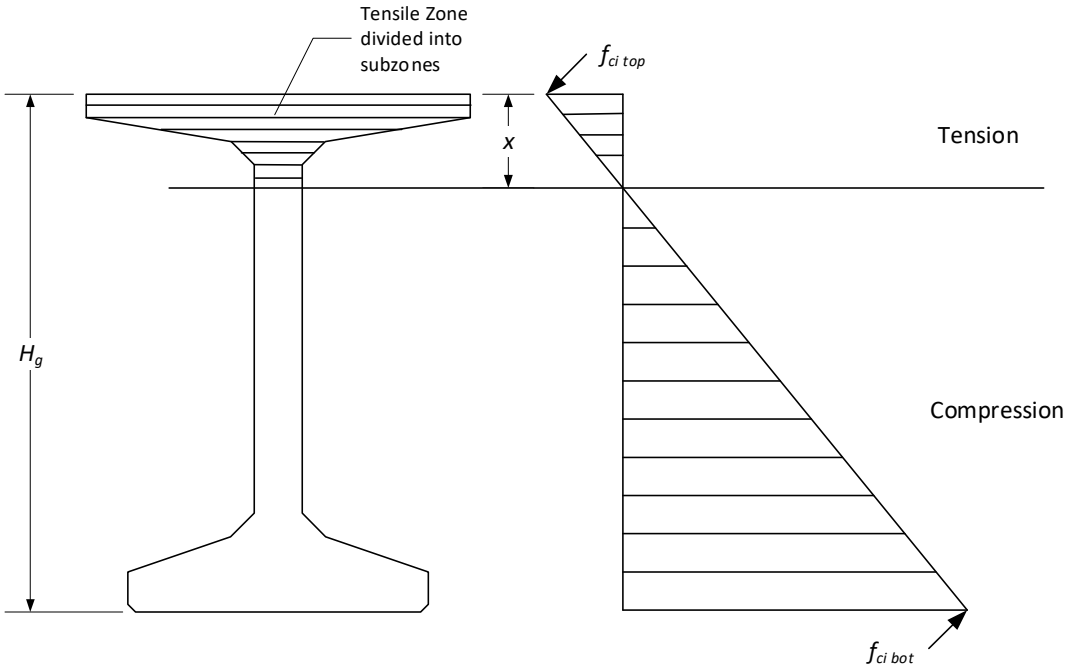

$$T = \int f_{ci}(x)dA \approx \sum T_i = \sum f_{ci}(x_i)A_i$$

$$A_s = \frac{T}{f_s}, where\ f_s = 0.5f_y \leq 30.0\ ksi$$

5.2.2 Strength-Limit State

5.2.2.A Flexure

Design for flexural force effects shall be in accordance with AASHTO LRFD Section 5.6.

For prestressed concrete girders, the approximate methods of AASHTO LRFD Section 5.6.3 underestimate the flexural strength of the composite deck-girder system[2, 23]. Strain compatibility approaches such as the PCI *Bridge Design Manual*[3] method (PCI BDM Section 8.2.2.5) and the Nonlinear Strain Compatibility Analysis method in the PCI Journal[23] are recommended. In addition to the effective area of the deck, the top flange of the girder and the mild reinforcement in the deck and the top flange of the girder may be included in the analysis.

The typical section for computation of prestressed concrete girder composite section properties is shown in Figure 5.6.2-1.

5.2.2.A.1 *Flexural Design of Nonprestressed Singly-Reinforced Rectangular Beams*

For design purposes, the area of reinforcement for a nonprestressed singly-reinforced rectangular beam or slab can be determined by letting:

$$M_u = \phi M_n = \phi A_s f_y \left(d - \frac{a}{2}\right) \quad (5.2.2\text{-}1)$$

However, if:

$$a = \frac{A_s f_y}{\alpha_1 f_c' b} \quad (5.2.2\text{-}2)$$

Equation (2) can be substituted into equation (1) and solved for A_s:

$$A_s = \left(\frac{\alpha_1 f_c' b}{f_y}\right)\left[d - \sqrt{d^2 - \frac{2M_u}{\alpha_1 f_c' b \phi}}\right] \quad (5.2.2\text{-}3)$$

Where:

A_s = Area of tension reinforcement (in^2)
M_u = Factored moment (kip-in)
f'_c = Specified compressive strength of concrete (ksi)
f_y = Specified minimum yield strength of tension reinforcement (ksi)
b = Width of the compression face (in)
d = Distance from compression face to centroid of tension reinf. (in)
Φ = 0.9
= From AASHTO LRFD Section 5.6.2.2

The resistance factor should be assumed to be 0.9 for a tension-controlled section for the initial determination of A_s. This assumption must then be verified by checking that the tensile strain in the extreme tension steel is equal to or greater than 0.005. This will also assure that the tension reinforcement has yielded as assumed.

$$\epsilon_t = 0.003\left(\frac{d_t - c}{c}\right) \geq 0.005 \quad (5.2.2\text{-}4)$$

Where:

ε_t = Tensile strain in the extreme tension steel
d_t = Distance from extreme compression fiber to centroid of extreme tension reinforcement (in)
c = $\dfrac{A_s f_y}{\alpha_1 f_c' b \beta_1}$
β_1 = From AASHTO LRFD Section 5.6.2.2

5.2.2.B Shear

AASHTO LRFD Section 5.7 addresses shear design of concrete members.

1. The shear design of prestressed members shall be based on the general procedure of AASHTO LRFD Section 5.7.3.4.2.
2. The shear design of all non-prestressed members shall be based on either the general procedure, or the simplified procedure of AASHTO LRFD Section 5.7.3.4.1.

3. The strut-and-tie model shall be employed as required by AASHTO LRFD Sections 5.7.1.1 and 2 for regions adjacent to abrupt changes in cross-section, openings, draped ends, deep beams, corbels, integral bent caps, c-bent caps, outrigger bents, deep footings, pile caps, etc.
4. The maximum spacing of transverse reinforcement is limited to 18 inches.

For prestressed concrete girders, shear for the critical section at d_v from the internal face of the support and at the harping point are of particular interest.

5.2.2.C Interface Shear

Interface shear transfer (shear friction) design is to be performed in accordance with AASHTO LRFD Section 5.7.4.

If a roughened surface is required for shear transfer at construction joints in new construction, they shall be identified in the plans. See *Standard Specifications* Section 6-02.3(12)A.

When designing for shear transfer between new and existing concrete, the designer shall consider the high construction cost associated with roughening existing concrete surfaces. Whenever practical, the design for placing new concrete against existing concrete shall be completed such that roughening of the existing concrete surfaces is not required (i.e. use cohesion and friction factors for a surface that is not intentionally roughened).

When the additional capacity provided by a roughened surface is required, the surface roughening shall meet the requirements specified in AASHTO LRFD Section 5.7.4.4 (i.e. uniform ¼″ minimum amplitude). See *Standard Specifications* Section 6-02.3(12)B and applicable WSDOT special provisions for concrete removal for reference.

The spall pattern roughening detail shown in Figure 5.2.2-1 may be included on plans as an alternative to the default uniform ¼″ amplitude roughening.

Figure 5.2.2-1 Spall Pattern Roughening Detail

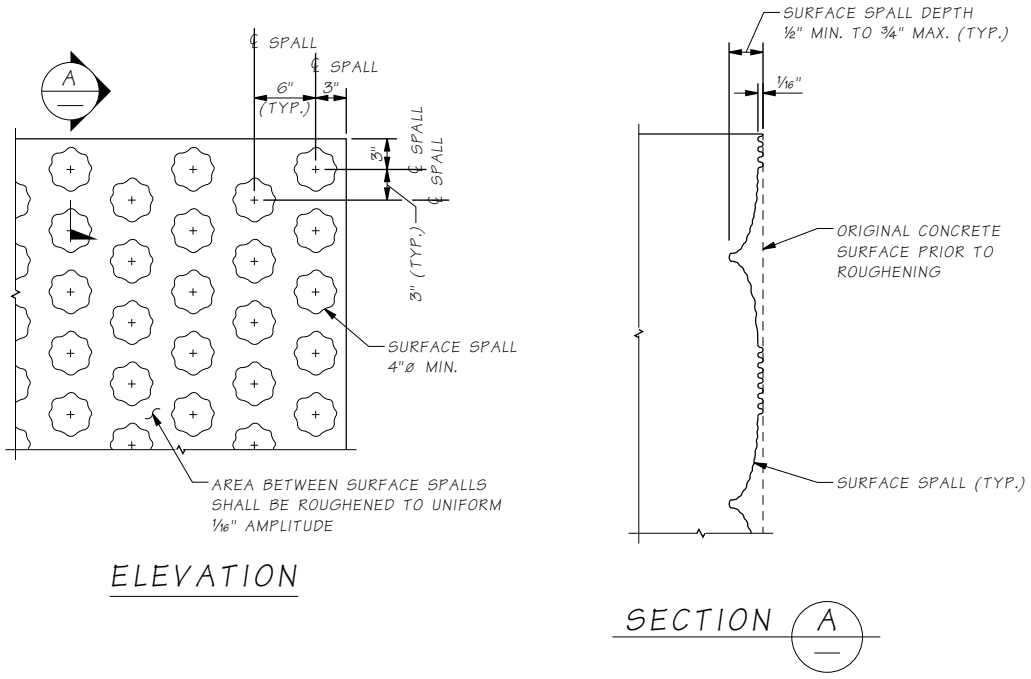

Interface shear in prestressed concrete girder design is critical at the interface connection between deck slab and girder, and at the end connection of the girder to a diaphragm or crossbeam. Shear in these areas is resisted by roughened or saw-tooth shear keyed concrete as well as reinforcement extending from the girder.

5.2.2.C.1 *Interface Shear Between Deck Slab and Girder*

The top surfaces of prestressed concrete girders with cast-in-place decks shall be roughened as described in *Standard Specifications* Section 6-02.3(25)H. The interface shear is resisted by the girder stirrups which extend up into the deck slab as well as the roughened top surface of the girder top flange.

It is conservative to compute the interface shear force using the full factored loading applied to the composite deck slab and girder. However, the interface shear force need only be computed from factored loads applied to the composite section after the deck slab is placed such as superimposed dead loads and live loads.

For Stay-in-Place (SIP) deck systems, only the roughened top flange surface between SIP panel supports (and the portion of the permanent net compressive force P_c on that section) is considered engaged in interface shear transfer.

5.2.2.C.2 *Interface Shear Friction at Girder End*

A prestressed concrete girder may be required to carry shears at the end surface of the girder.

An end condition at an intermediate pier crossbeam is shown in Figure 5.2.2-2. The shear which must be carried along the interface A-A is the actual factored shear acting on the section. The portion of the girder end that is roughened with saw-toothed shear keys shown on the standard girder plans may be considered as a “surface intentionally roughened to an amplitude of 0.25 inches”. Shear resistance must be developed using interface shear theory assuming the longitudinal bars and the extended strands are actively participating. The main longitudinal deck slab reinforcement is already fully stressed by negative bending moments and thus cannot be considered for shear requirements. All bars, including the extended strands, must be properly anchored in order to be considered effective. This anchorage requirement must be clearly shown on the plans.

Similar requirements exist for connecting the end diaphragm at bridge ends where the diaphragm is cast on the girders (girder End Type A). In this case, however, loads consist only of the factored diaphragm dead load, approach slab dead load, and those wheel loads which can distribute to the interface. Longitudinal reinforcement provided at girder ends shall be identical in both ends of the girder for construction simplicity.

The program PGSuper does not check interface shear friction at girder ends. Standard girder plan details are adequate for girder End Types A and B. Standard girder plan details shall be checked for adequacy for girder End Types C and D.

Figure 5.2.2-2 End Connection for Continuous Span Girder

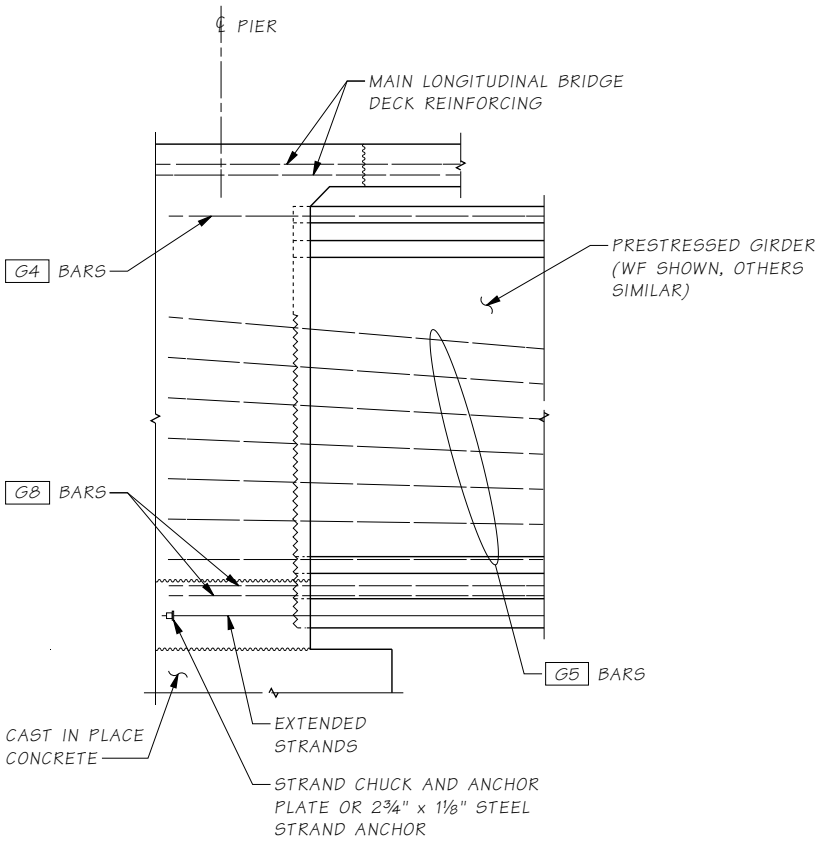

5.2.2.D Shear and Torsion

The design for shear and torsion is based on ACI 318-02 *Building Code*[4] *Requirements for Structural Concrete and Commentary* (318F-02) and is satisfactory for bridge members with dimensions similar to those normally used in buildings. AASHTO LRFD Section 5.7.3.6 may also be used for design.

According to Hsu[5], utilizing ACI 318-02 is awkward and overly conservative when applied to large-size hollow members. Collins and Mitchell[6] propose a rational design method for shear and torsion based on the compression field theory or strut-and-tie method for both prestressed and non-prestressed concrete beams. These methods assume that diagonal compressive stresses can be transmitted through cracked concrete. Also, shear stresses are transmitted from one face of the crack to the other by a combination of aggregate interlock and dowel action of the stirrups.

For recommendations and design examples, the designer can refer to the paper by M.P. Collins and D. Mitchell, Shear and Torsion Design of Prestressed and Non-Prestressed Concrete Beams, PCI Journal, September-October 1980, pp. 32-100[6].

5.2.3 Strut-and-Tie Model

Strut-and-tie models shall be used near regions of discontinuity or where beam theory is not applicable. Design and detailing considerations for strut-and-tie modeling is covered in AASHTO LRFD Section 5.8.2.

5.2.4 Deflection and Camber

5.2.4.A General

Flexural members are designed to have adequate stiffness to limit deflections or any deformations which may adversely affect the strength or serviceability of the structure at service load plus impact. The minimum superstructure depths are specified in AASHTO LRFD Table 2.5.2.6.3-1 and deflections shall be computed in accordance with AASHTO LRFD Section 5.6.3.5.2.

Accurate predictions of deflections are difficult to determine, since modulus of elasticity of concrete, E_c, varies with stress and age of concrete. Also, the effects of creep on deflections are difficult to estimate. For practical purposes, an accuracy of 10 to 20 percent is often sufficient. Prestressing can be used advantageously to control deflections; however, there are cases where excessive camber due to prestress has caused problems.

5.2.4.B Deflection Calculation for Prestressed Concrete Girders

The "*D*" dimension is the computed girder deflection at midspan (positive upward) immediately prior to deck slab placement.

Standard Specifications Section 6-02.3(25)K defines two levels of girder camber at the time the deck concrete is placed, denoted D @ 40 Days and D @ 120 Days. They shall be shown in the plans to provide the contractor with lower and upper bounds of camber that can be anticipated in the field.

PGSuper calculates estimated cambers at 40 days (D_{40}) and 120 days (D_{120}). Due to variations in observed camber, these estimated cambers are generally considered to be upper bounds at their respective times. This is based on measured girder cambers of prestressed concrete girders compared with the estimated cambers from PGSuper.

D @ 120 Days is the upper bound of expected camber range at a girder age of 120 days after the release of prestress and is primarily intended to mitigate interference between the top of the cambered girder and the placement of concrete deck reinforcement. It is also used to calculate the "A" dimension at the girder ends. The age of 120 days was chosen because data has shown that additional camber growth after this age is negligible. D @ 120 Days may be taken as D120, the estimated camber at 120 days reported by PGSuper.

D @ 40 Days is the lower bound of expected camber range at a girder age of 40 days (30 days after the earliest allowable girder shipping age of 10 days). To match the profile grade, girders with too little camber require an increased volume of haunch concrete along the girder length. For girders with large flange widths, such as the WF series, this can add up to significant quantities of additional concrete for a large deck placement. Thus, the lower bound of camber allows the contractor to assess the risk of increased concrete quantities and mitigates claims for additional material. D @ 40 Days shall be taken as 50 percent of D40, the estimated camber at 40 days reported by PGSuper.

Figure 5.2.4-1 shows a typical pattern of girder deflection with time at centerline span. Portions of this characteristic curve are described below. The subparagraph numbers correspond to circled numbers on the curve.

5.2.4.B.1 *Elastic Deflection Due to Release of Prestress*

The prestress force produces moments in the girder tending to bow the girder upward. Resisting these moments are girder section dead load moments. The result is a net upward deflection.

5.2.4.B.2 *Creep Deflection Before Cutting Temporary Strands*

The girder continues to deflect upward due to the effect of creep. This effect is computed using the equation stated in Section 5.1.1E.

5.2.4.B.3 *Deflection Due to Cutting of Temporary Strands*

Cutting of temporary strands results in an elastic upward deflection. The default time interval for creep calculations for release of top temporary strands is 90 days after the release of prestress during girder fabrication for D_{120} (10 days for D_{40}).

5.2.4.B.4 *Diaphragm Load Deflection*

The load of diaphragm is applied to the girder section resulting in an elastic downward deflection. The default time interval for creep calculations for placing diaphragms is 90 days after the release of prestress during girder fabrication for D_{120} (10 days for D_{40}).

5.2.4.B.5 *Creep Deflection After Casting Diaphragms*

The girder continues to deflect upward for any time delay between diaphragms and deck slab casting.

5.2.4.B.6 *Deck Slab Load Deflection*

The load of the deck slab is applied to the girder section resulting in an elastic downward deflection. The default time interval for creep calculations for placing the deck slab is 120 days after the release of prestress during girder fabrication for D_{120} (40 days for D_{40}).

5.2.4.B.7 *Superimposed Dead Load Deflection*

The load of the traffic barriers, sidewalk, overlay, etc. is applied to the composite girder section resulting in an elastic downward deflection.

5.2.4.B.8 *Final Camber*

It might be expected that the above deck slab dead load deflection would be accompanied by a continuing downward deflection due to creep. However, many measurements of actual structure deflections have shown that once the deck slab is poured, the girder tends to act as though it is locked in position. To obtain a smooth riding surface on the deck, the deflection indicated on Figure 5.2.4-1 as “Screed Camber” (known as “C”) is added to the profile grade elevation of the deck screeds. The “C” dimension and the “Screed Setting Dimensions” detail shall be given in the plans.

5.2.4.C Pre-camber

Prestressed concrete girders may be precambered to compensate for the natural camber and for the effect of the roadway geometry.

Figure 5.2.4-1 Prestressed Concrete Girder Camber

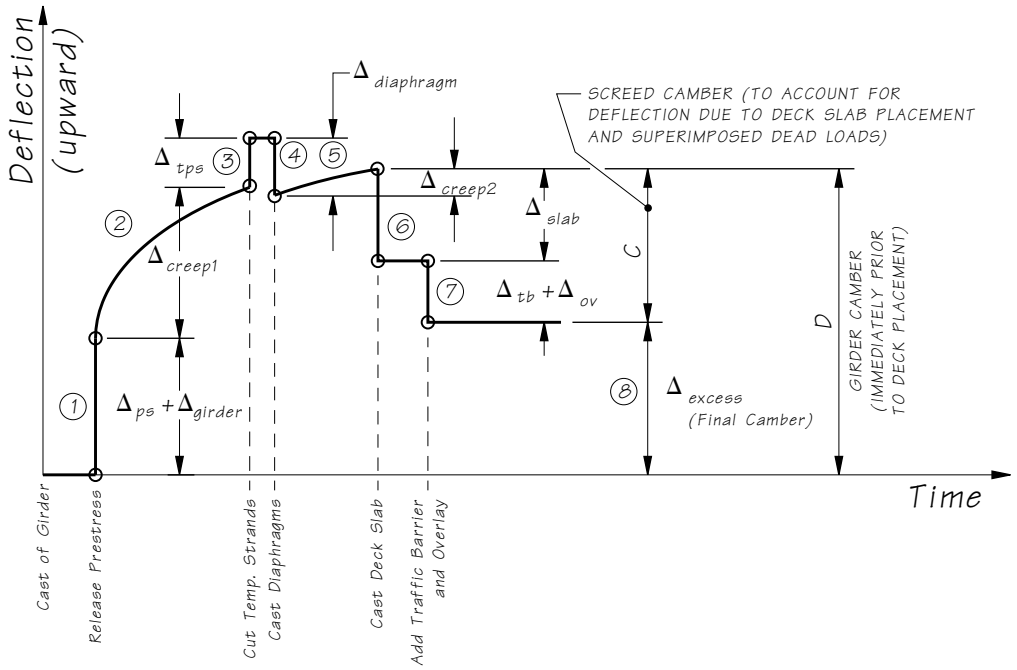

5.2.5 Construction Joints

Construction joints must divide the structure into a logical pattern of separate elements which also permit ease of manufacture and assembly.

The joint surfaces should be oriented perpendicular to the outer face of the element.

When construction joints are shown in the Plans for the convenience of the Contractor and are not structurally required, they shall be indicated as optional.

5.2.5.A Types of Joints

Joints are either wide or match cast. Depending on their width, they may be filled with CIP concrete or grout. Match cast joints are normally bonded with an epoxy bonding agent. Dry match cast joints are not recommended.

5.2.5.B Shear Keys

In order to assist shear transmission in wide joints, use a suitable system of keys. The shape of the keys may be chosen to suit a particular application and they can be either single keys or multiple keys. Single keys are generally large and localized whereas multiple keys generally cover as much of the joint surface area as is practical.

Single keys provide an excellent guide for erection of elements. Single keys are preferred for all match cast joints.

For all types of joints, the surfaces must be clean, free from grease and oil, etc. When using epoxy for bonding, the joints shall be lightly sandblasted to remove laitance. For CIP or other types of wide joints, the adjacent concrete surfaces shall be roughened and kept thoroughly wet, prior to construction of the joint. CIP joints are generally preferred.

5.2.6 Inspection Access and Lighting

5.2.6.A Inspection Access

For girder bridges with bottom flanges, the minimum girder spacing shall be 5' to permit inspection access between the bottom flanges.

See Section 10.8.1 for design requirements for confined spaces.

5.2.6.B Access Hatch, Air Vent Holes and Inspection Lighting

Box girders with inside clear height of less than or equal to 4 feet do not require access, lighting, receptacles and ventilation. Utilities, longitudinal restrainers and other components requiring inspection or maintenance are not permitted inside the box girder cells.

Box girders with inside clear height greater than 4 feet but less than 6.5 feet shall have access, lighting, receptacles and ventilation provided inside each box girder cell containing utilities, longitudinal restrainers and other components requiring inspection or maintenance.

Box girders with inside clear height greater than or equal to 6.5 feet shall have access, lighting, receptacles and ventilation provided inside.

Access, lighting, receptacles and ventilation shall not be provided inside prestressed concrete tub girder cells. Utilities, longitudinal restrainers and other components requiring inspection or maintenance are not permitted inside the girder cells.

Access doors shall have a minimum 2′-6″ diameter or 2′-6″ square clear opening. Lock box latches shall be installed on all access doors accessible from ground level. Access hatches shall swing into the box girders and shall be placed at locations that do not impact traffic. Lighting and receptacle requirements shall conform to *Design Manual* Chapter 1040. Air vents shall conform to Figures 5.2.6-1 and 5.2.6-2.

Box girder penetrations greater than one inch in diameter through the exterior shall be covered with galvanized wire mesh screen to prevent vermin and birds from accessing the penetration and the interior of the box girder. The wires shall have a maximum spacing of 1 inch in both directions.

Figure 5.2.6-1 Access Hatch Details

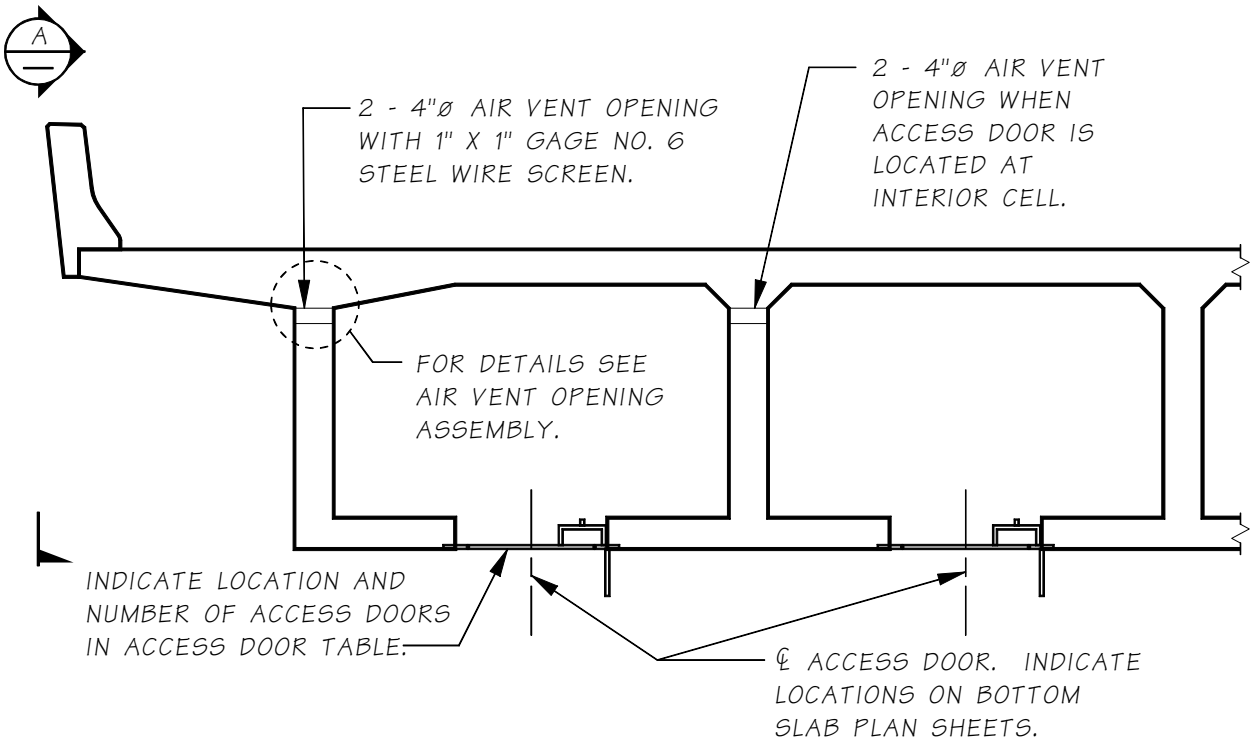

ELEVATION - AIR VENT HOLE IN WEBS

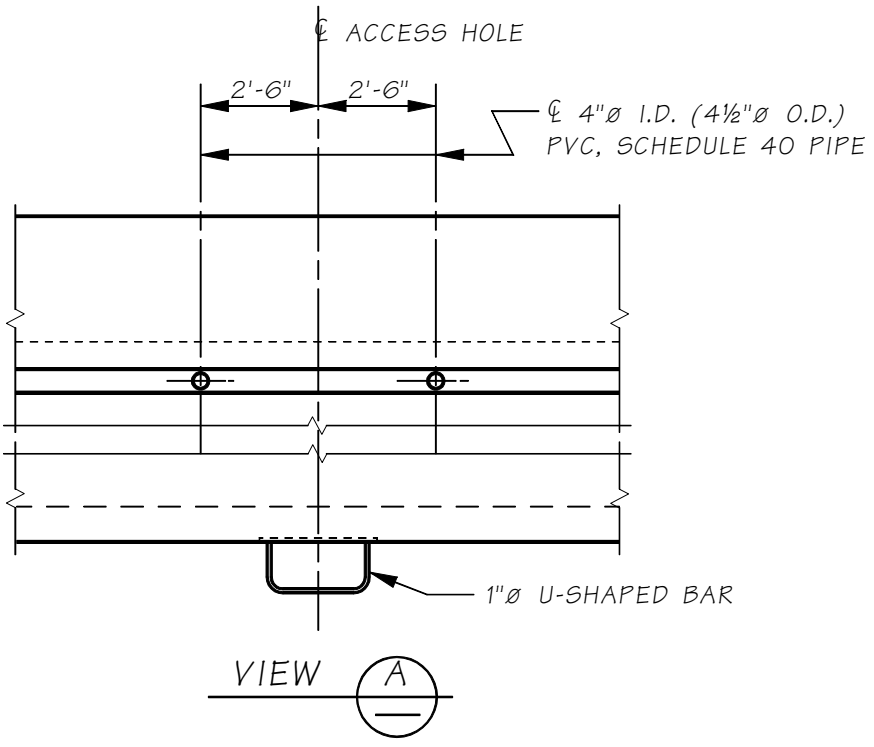

Figure 5.2.6-2 Air Vent Opening Detail

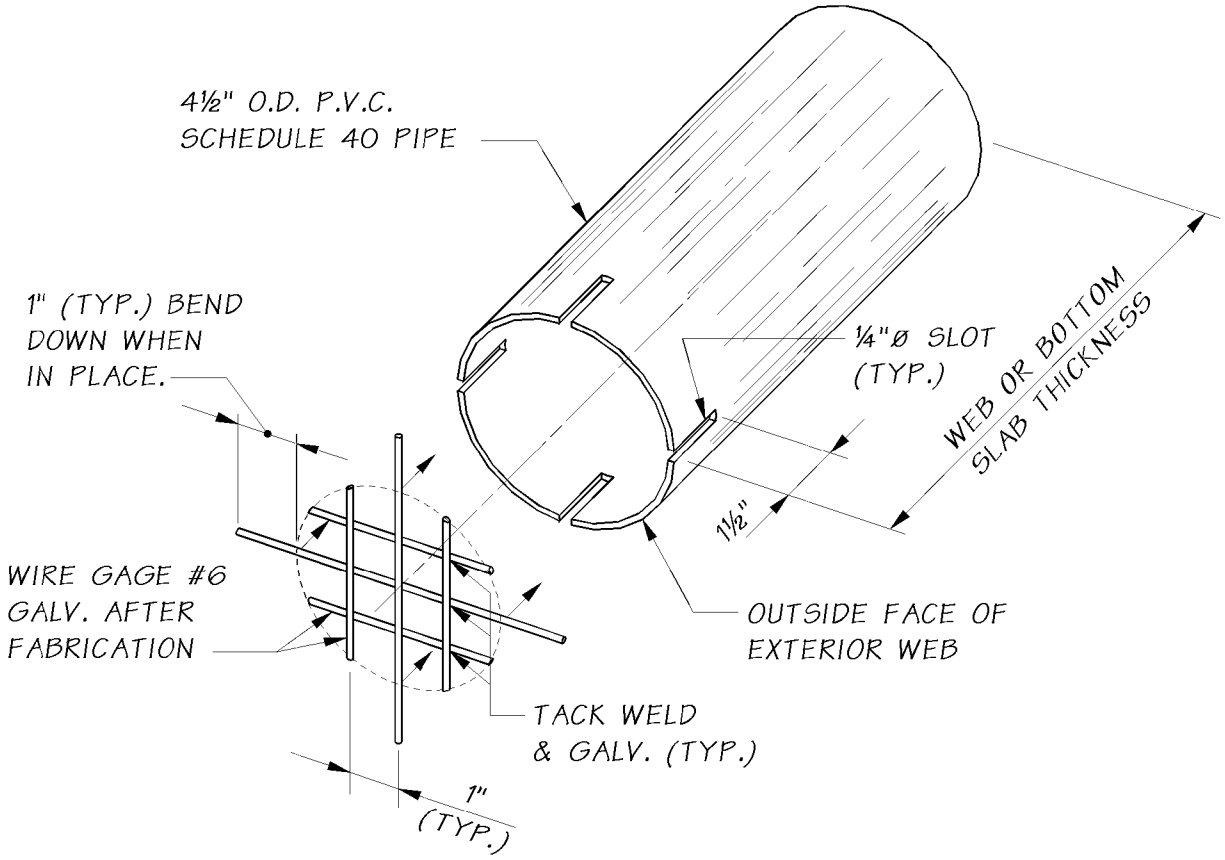

5.3 Reinforced Concrete Box Girder Bridges

Post-tensioning shall be required for all new CIP reinforced concrete single-span or multi-span box girder bridges.

The use of CIP reinforced concrete (RC) box girder bridges without post-tensioning shall be restricted to widening existing RC box girder bridges. RC box girder bridges may also be used for bridges with tight curvatures or irregular geometry upon the WSDOT Bridge Design Engineer's approval. Partial prestressing shall not be considered for design of RC box girders.

The performance and longevity of RC box girder bridges have been a major concern. Cracking in RC box girders are flexural in nature and are an inherent part of reinforced concrete design. RC box girders are designed for ultimate strength and checked for distribution of reinforcement for service conditions and control of cracking. This means that the concrete cracks under applied loads but the cracks are under control. Open cracks in RC box girders result in rebar corrosion and concrete deterioration, affecting the bridge longevity. Post-tensioning RC box girders eliminates cracks, limits corrosion, and improves structural performance.

The above requirements apply equally to RC T-beam and slab bridges. However, these types of superstructures are not encouraged. See also Sections 2.4.1.C and 2.4.1.D.

5.3.1 Box Girder Basic Geometries

5.3.1.A Web Spacing

The most economical web spacing for ordinary box girder bridges varies from about 8 to 12 feet. Greater girder spacing requires some increase in both top and bottom slab thickness, but the cost of the additional concrete can be offset by decreasing the total number of girder stems. Fewer girder stems reduces the amount of form work required and can lower costs.

The number of girder stems can be reduced by cantilevering the top slab beyond the exterior girders. A deck overhang of approximately one-half the girder spacing generally gives satisfactory results. This procedure usually results in a more aesthetic as well as a more economical bridge.

For girder stem spacing in excess of 12 feet or cantilever overhang in excess of 6 feet, transverse post-tensioning shall be used.

5.3.1.B Basic Dimensions

The basic dimensions for concrete box girders with vertical and sloped exterior webs are shown in Figures 5.3.1-1 and 5.3.1-2, respectively.

5.3.1.B.1 *Top Slab Thickness, T1 (includes ½″ wearing surface)*

$T1 = \frac{12(S + 10)}{30}$ but not less than 7″ with overlay or 7.5″ without overlay.

5.3.1.B.2 *Bottom Slab Thickness, T2*

1. Near center span

   $T2 = \frac{12\,S_{clr}}{16}$ but not less than 5.5″ (normally 6.0″ is used).

2. Near intermediate piers

   Thickening of the bottom slab is often used in negative moment regions to control compressive stresses that are significant.

   Transition slope = 24:1 (see T2 in Figure 5.3.1-1).

5.3.1.B.3 *Girder Stem (Web) Thickness, T3*

1. **Near Center Span**

   Minimum T3 = 9.0″ — vertical

   Minimum T3 = 10.0″ — sloped

2. **Near Supports**

   Thickening of girder stems is used in areas adjacent to supports to control shear requirements.

   Changes in girder web thickness shall be tapered for a minimum distance of 12 times the difference in web thickness.

   Maximum T3 = T3 + 4.0″ maximum

   Transition length = 12 × (difference in web thickness)

5.3.1.B.4 *Intermediate Diaphragm Thickness, T4 and Diaphragm Spacing*

1. For tangent and curved bridge with R > 800 feet

   T4 = 0″ (diaphragms are not required.)

2. For curved bridge with R < 800 feet

   T4 = 8.0″

   Diaphragm spacing shall be as follows:

   For 600′ < R < 800′ at ½ pt. of span.

   For 400′ < R < 600′ at ⅓ pt. of span.

   For R < 400′ at ¼ pt. of span.

5.3.1.C Construction Considerations

Review the following construction considerations to minimize constructability problems:

1. Construction joints at slab/stem interface or fillet/stem interface at top slab are appropriate.
2. All construction joints to have roughened surfaces.
3. Bottom slab is parallel to top slab (constant depth).
4. Girder stems are vertical.
5. Dead load deflection and camber to nearest ⅛″.
6. Skew and curvature effects have been considered.
7. Thermal effects have been considered.
8. The potential for falsework settlement is acceptable. This always requires added stirrup reinforcement in sloped outer webs.

5.3.1.D Load Distribution

5.3.1.D.1 *Unit Design*

According to the AASHTO LRFD, the entire slab width shall be assumed effective for compression. It is both economical and desirable to design the entire superstructure as a unit rather than as individual girders. When a reinforced box girder bridge is designed as an individual girder with a deck overhang, the positive reinforcement is congested in the exterior cells. The unit design method permits distributing all girder reinforcement uniformly throughout the width of the structure.

5.3.1.D.2 *Dead Loads*

Include additional D.L. for top deck forms:

5 pounds per square foot of the area.

10 pounds per square foot if web spacing > 10′-0″.

5.3.1.D.3 *Live Load*

See Section 3.9.4 for live load distribution to superstructure and substructure.

Figure 5.3.1-1 Basic Dimensions–Vertical Webs

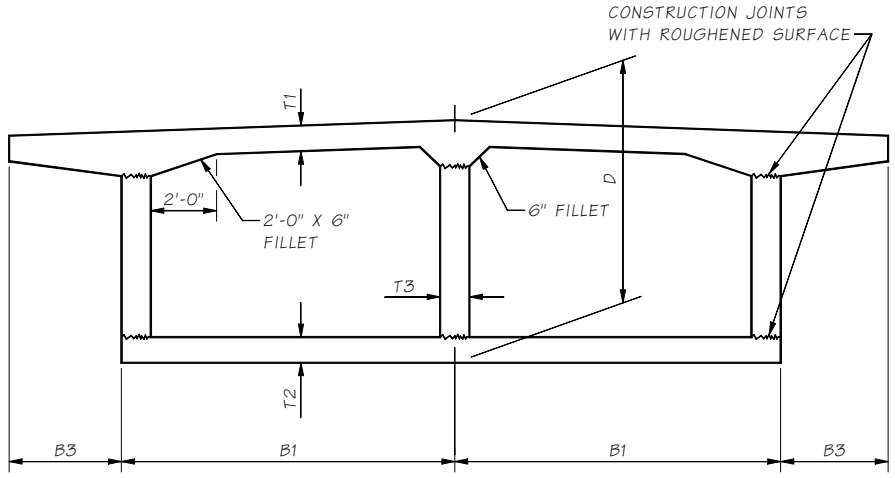

(a)

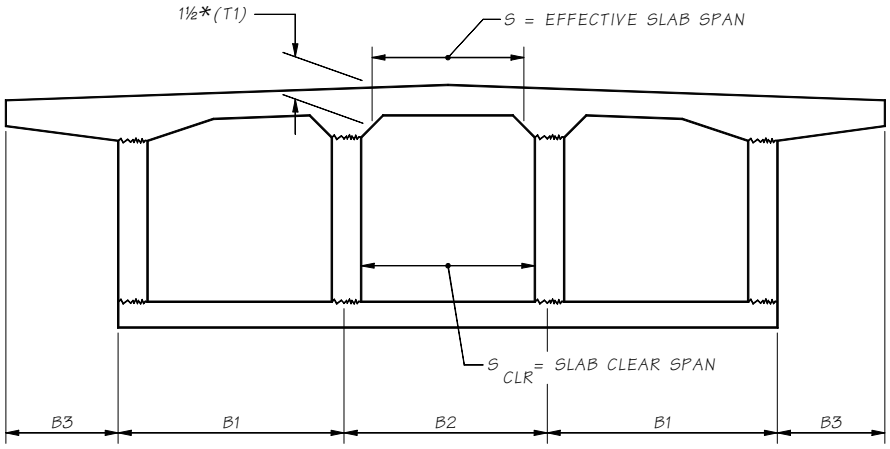

(b)

Figure 5.3.1-2 Basic Dimensions–Sloped Webs

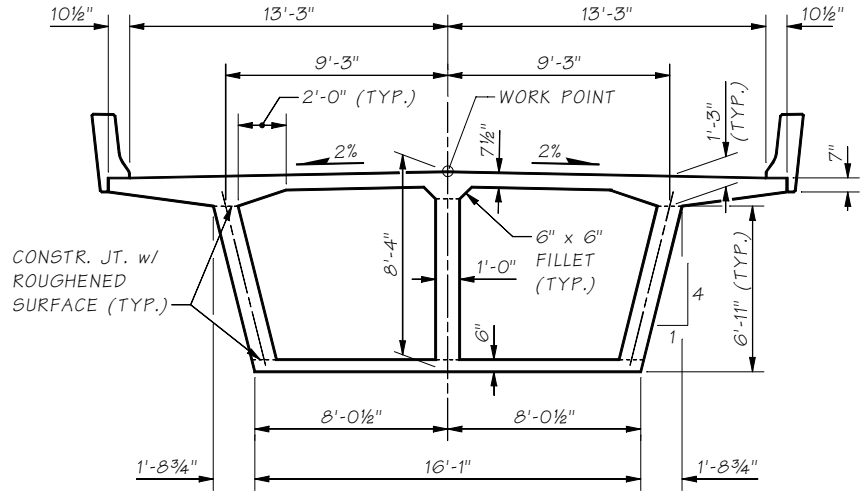

a - 2% CROWN

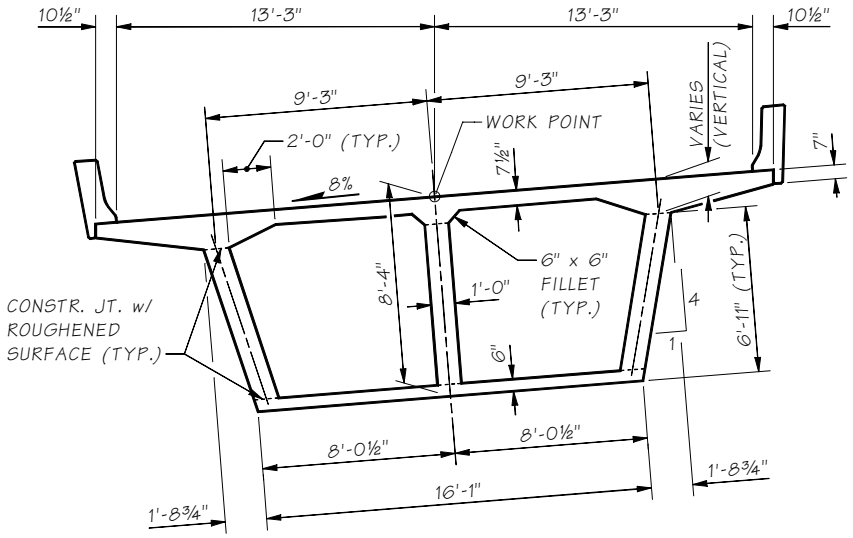

b - 8% SUPERELEVATION

BASIC DIMENSIONS
SLOPED WEBS

Dimensions are shown for demonstration only

5.3.2 Reinforcement

This section discusses flexural and shear reinforcement for top slab, bottom slab, webs, and intermediate diaphragms in box girders.

5.3.2.A Top Slab Reinforcement

5.3.2.A.1 *Near Center of Span*

Figure 5.3.2-1 shows the reinforcement required near the center of the span and Figure 5.3.2-2 shows the overhang reinforcement.

1. Transverse reinforcing in the top and bottom layers to transfer the load to the main girder stems.
2. Bottom longitudinal "distribution reinforcement" in the middle half of the deck span in S_{eff} is provided to aid distributing the wheel loads.
3. Top longitudinal "temperature and shrinkage reinforcement."

5.3.2.A.2 *Near Intermediate Piers*

Figure 5.3.2-3 illustrates the reinforcement requirement near intermediate piers.

1. Transverse reinforcing same as center of span.
2. Longitudinal reinforcement to resist negative moment (see Figure 5.3.2-3).
3. "Distribution of flexure reinforcement" to limit cracking shall satisfy the requirement of AASHTO LRFD Section 5.6.7 for class 2 exposure condition.

5.3.2.A.3 *Bar Patterns*

1. **Transverse Reinforcement**

   It is preferable to place the transverse reinforcement normal to bridge center line and the areas near the expansion joint and bridge ends are reinforcement by partial length bars.

2. **Longitudinal Reinforcement**

Figure 5.3.2-1 Partial Section Near Center of Span

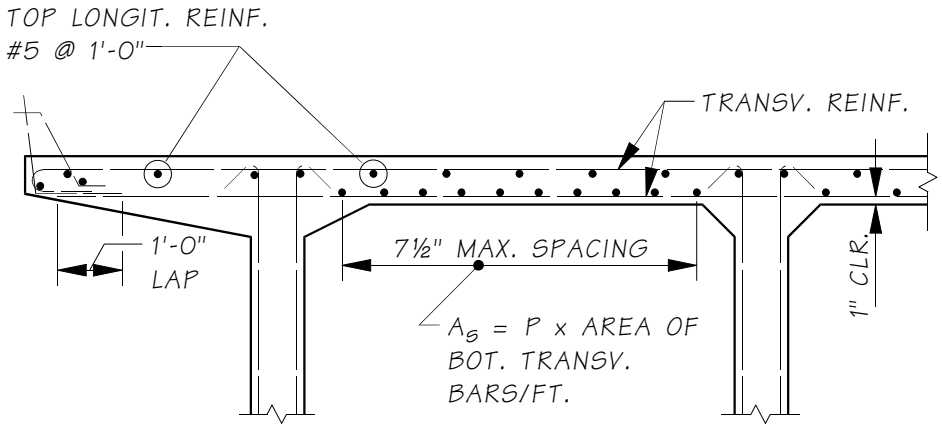

$$P = \frac{220}{\sqrt{S}} \qquad (MAX. = .67)$$

Figure 5.3.2-2 Overhang Detail

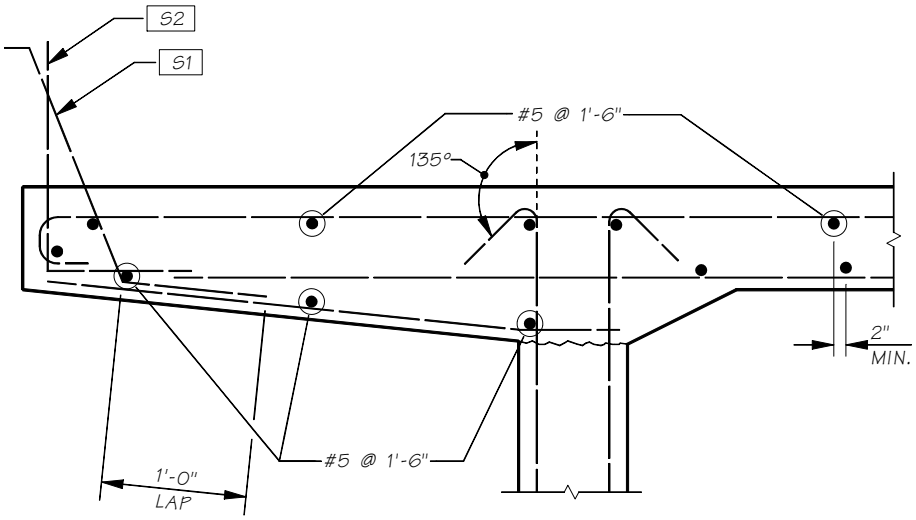

Figure 5.3.2-3 Top Slab Flexural Reinforcing Near Intermediate Pier

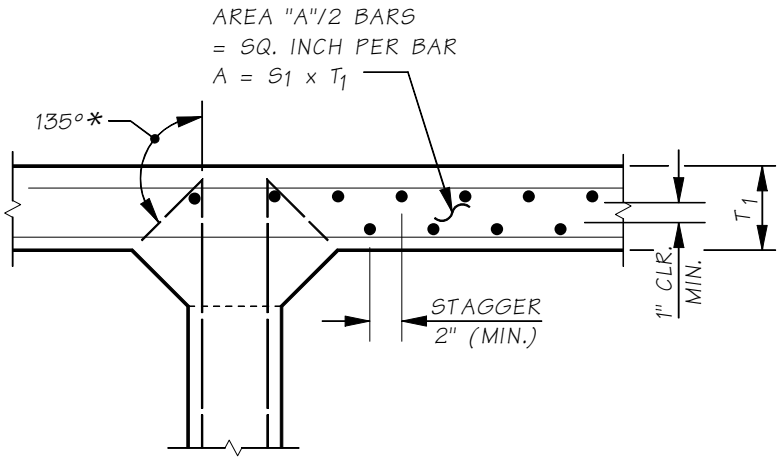

* ALL REBARS SHALL BE EPOXY COATED, BEND STIRRUPS 135 DEGREES. DO NOT EPOXY COAT STIRRUPS.

5.3.2.B Bottom Slab Reinforcement

5.3.2.B.1 *Near Center of Span*

Figure 5.3.2-5 shows the reinforcement required near the center of the span.

1. Minimum transverse "distributed reinforcement."

   A_s = 0.005 × flange area with ½A_s distributed equally to each surface.

2. Longitudinal "main reinforcement" to resist positive moment.

3. Check "distribution of flexure reinforcement" to limit cracking in accordance with AASHTO LRFD Section 5.6.7 for class 2 exposure condition.

4. Add steel for construction load (sloped outer webs).

5.3.2.B.2 *Near Intermediate Piers*

Figure 5.3.2-6 shows the reinforcement required near intermediate piers.

1. Minimum transverse reinforcement same as center of span.
2. Minimum longitudinal "temperature and shrinkage reinforcement." A_s = 0.004 × flange area with ½A_s distributed equally to each face.
3. Add steel for construction load (sloped outer webs).

5.3.2.B.3 *Bar Patterns*

1. **Transverse Reinforcement**

   All bottom slab transverse bars shall be bent at the outside face of the exterior web. For a vertical web, the tail splice will be 1′-0″ and for sloping exterior web 2′-0″ minimum splice with the outside web stirrups. See Figure 5.3.2-7.

2. **Longitudinal Reinforcement**

   For longitudinal reinforcing bar patterns, see Figures 5.3.2-5 and 5.3.2-6.

5.3.2.C Web Reinforcement

5.3.2.C.1 *Vertical Stirrups*

Vertical stirrups for a reinforced concrete box section is shown in Figure 5.3.2-8.

The web reinforcement shall be designed for the following requirements:

Vertical shear requirements.

- Out of plane bending on outside web due to live load on cantilever overhang.
- Horizontal shear requirements for composite flexural members.
- Minimum stirrups shall be:

$$\frac{A_v}{s} = 50\frac{b_w}{f_y} \qquad (5.3.2\text{-}1)$$

but not less than #5 bars at 1′-6″,

Where: b_W is the number of girder webs x T3

5.3.2.C.2 *Web Longitudinal Reinforcement*

Web longitudinal reinforcement for reinforced concrete box girders is shown in Figures 5.3.2-8 and 5.3.2-9. The area of skin reinforcement A_{sk} per foot of height on each side face shall be:

$$A_{sk} \geq 0.012(d - 30) \quad (5.3.2\text{-}2)$$

Reinforcing steel spacing < Web thickness (T3) or 12″.

The maximum spacing of skin reinforcement shall not exceed the lesser of d/6 and 12″. Such reinforcement may be included in strength computations if a strain compatibility analysis is made to determine stresses in the individual bars or wires. The total area of longitudinal skin reinforcement in both faces need not exceed one half of the required flexural tensile reinforcement.

For CIP sloped outer webs, increase inside stirrup reinforcement and bottom slab top transverse reinforcement as required for the web moment locked-in during construction of the top slab. This moment about the bottom corner of the web is due to tributary load from the top slab concrete placement plus 10 psf form dead load. See Figure 5.3.2-10 for typical top slab forming.

5.3.2.D Intermediate Diaphragm

Intermediate diaphragms are not required for bridges on tangent alignment or curved bridges with an inside radius of 800 feet or greater.

Figure 5.3.2-5 Bottom Slab Reinforcement Near Center of Span

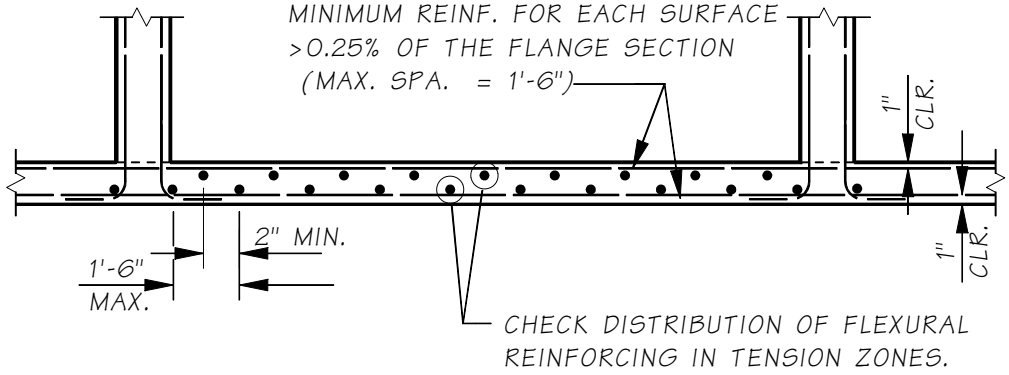

Figure 5.3.2-6 Bottom Slab Reinforcement Near Intermediate Pier

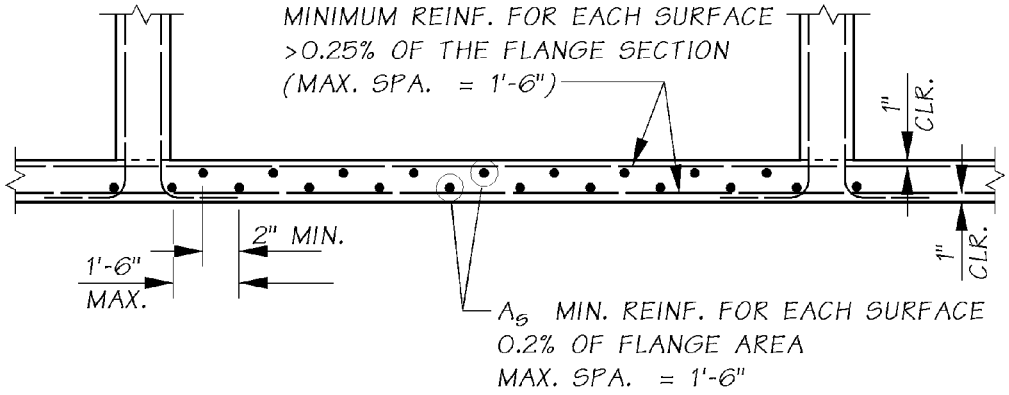

Figure 5.3.2-7 Web Reinforcement

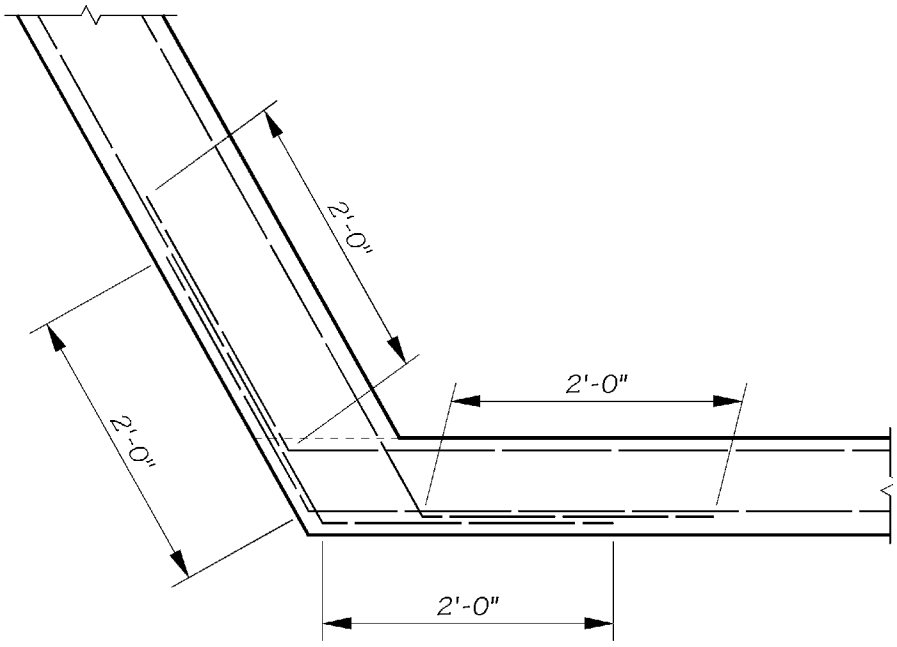

SLOPED WEB

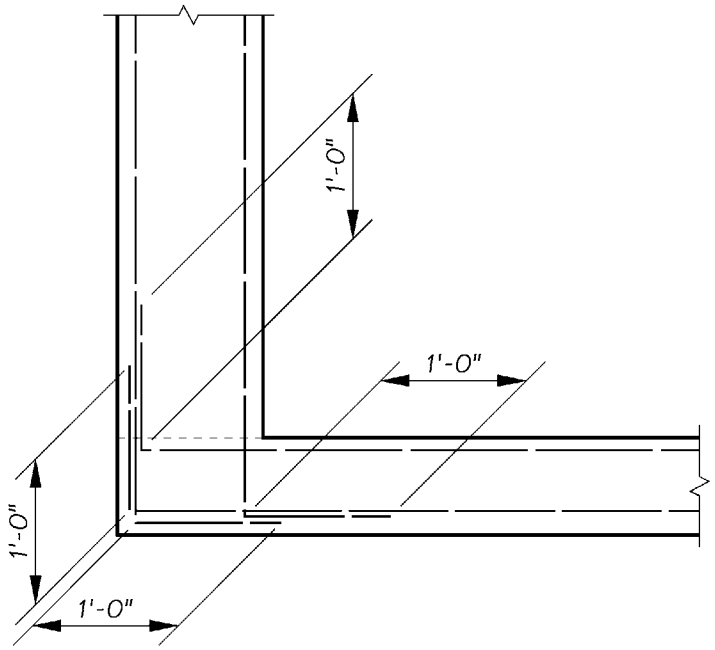

VERTICAL WEB

Figure 5.3.2-8 Web Reinforcement Details

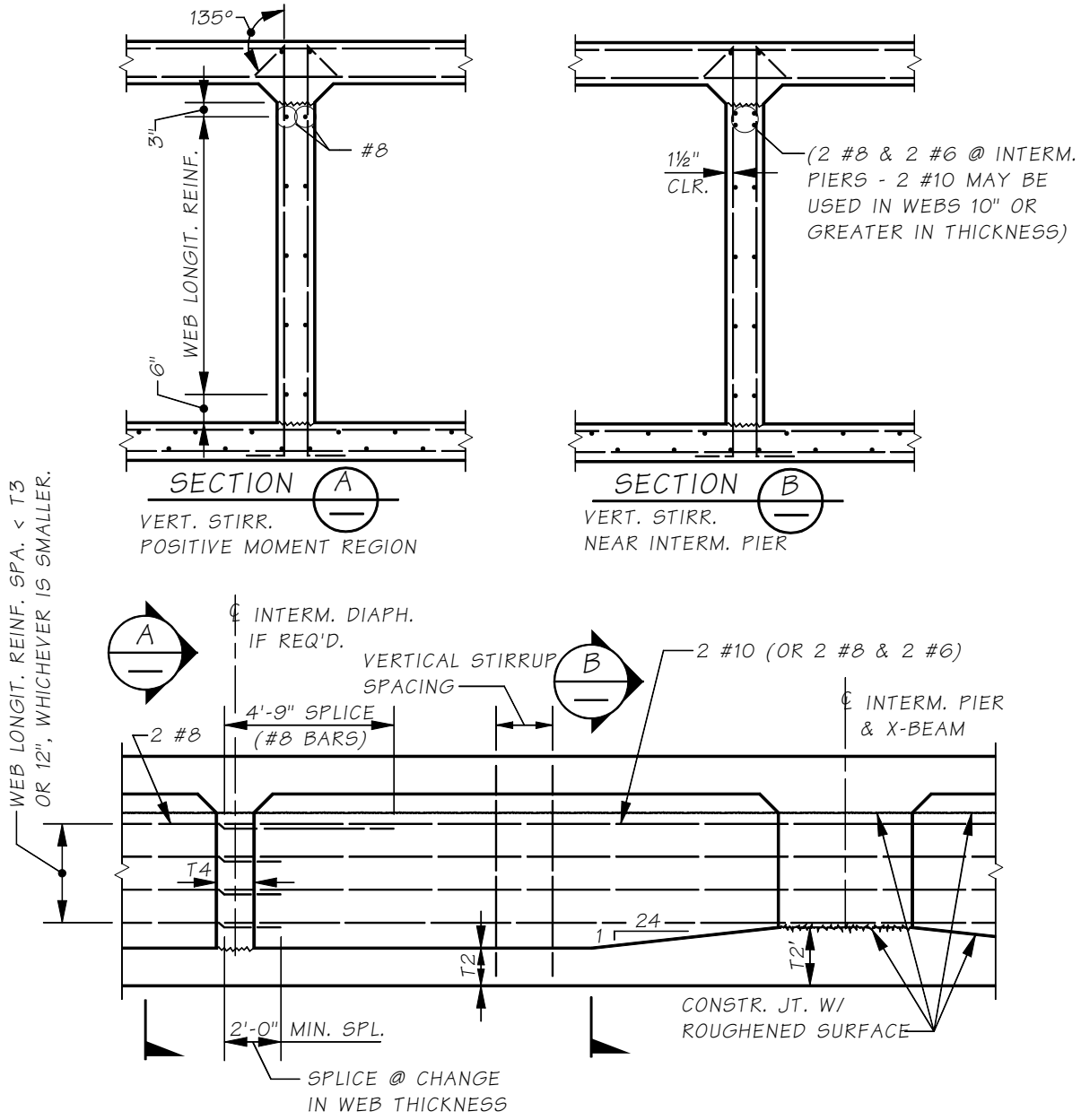

PARTIAL LONGITUDINAL GIRDER SECTION

Use 2 #10 (2 #8 & 2 #6 for 10" or less webs) at dead load negative moment region near piers. The length of shall be extended 35 diameters beyond the dead load point of inflecton. Do not splice the #10 (#8) bars near the pier. The #6 bars may be spliced at center pier. Use 2 #8 only for the positive moment region.

Figure 5.3.2-9 Web Reinforcement Details

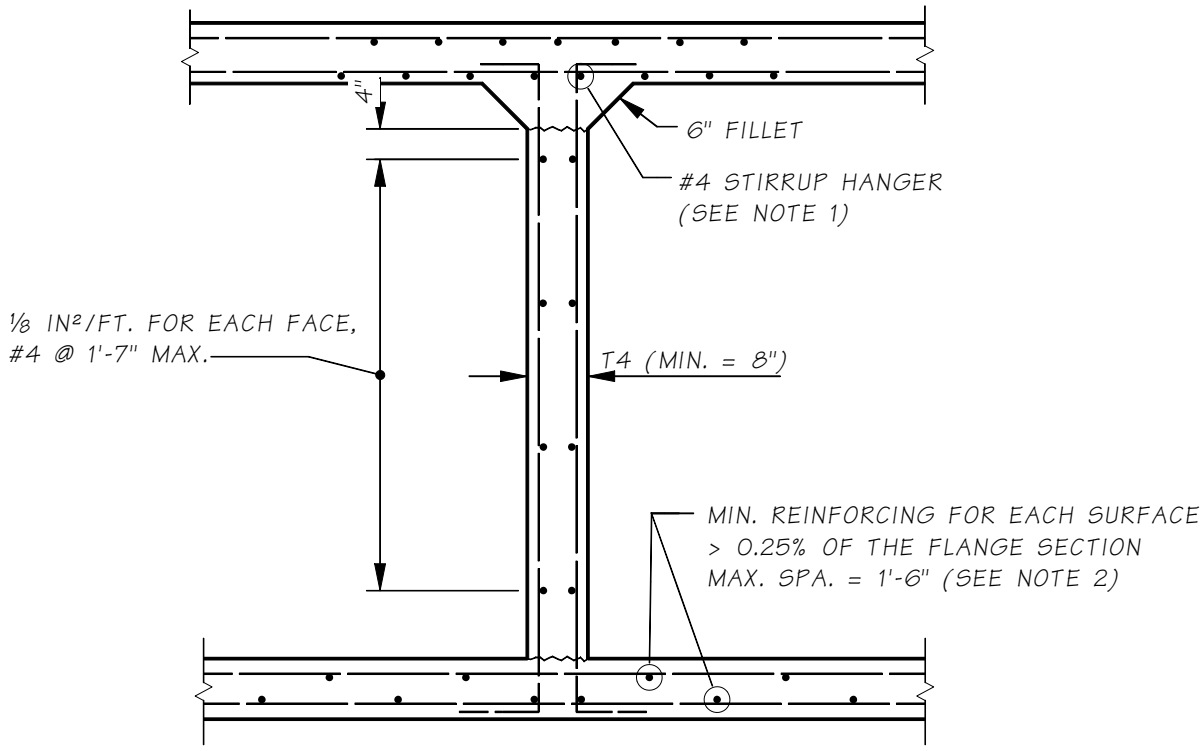

1. Stirrup hanger must be placed above longitudinal steel when diaphragm is skewed and slab reinforcement is placed normal to center of roadway. (Caution: Watch for the clearance with longitudinal steel.)

2. The reinforcement should have at least one splice to facilitate proper bar placement.

Figure 5.3.2-10 Typical Top Slab Forming for Sloped Web Box Girder

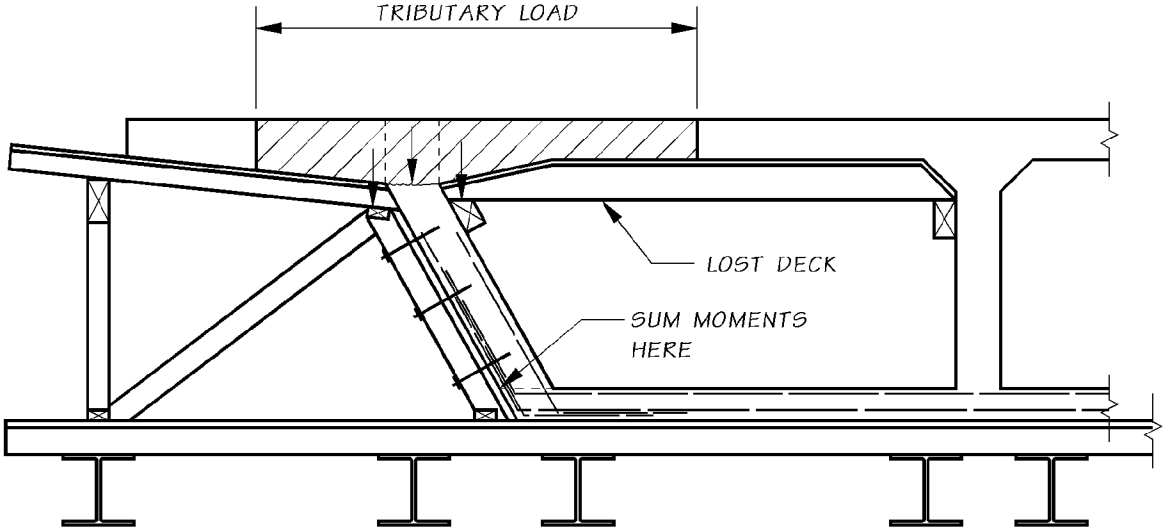

Notes:

1. The diagonal brace supports web forms during web pour. After cure, the web is stiffer than the brace, and the web attracts load from subsequent concrete placements.
2. The tributary load includes half the overhang because the outer web form remains tied to and transfers load to the web which is considerably stiffer than the formwork.
3. Increase web reinforcement for locked-in construction load due to top slab forming for sloped web box girders.

5.3.3 Crossbeam

5.3.3.A General

Crossbeam shall be designed in accordance with the requirements of strength limit state design of AASHTO LRFD and shall satisfy the serviceability requirements for crack control.

5.3.3.B Basic Geometry

For aesthetic purposes, it is preferable to keep the crossbeam within the superstructure so that the bottom slab of the entire bridge is a continuous plane surface interrupted only by the columns. Although the depth of the crossbeam may be limited, the width can be made as wide as necessary to satisfy design requirements. Normally, it varies from 3 feet to the depth of box but is not less than the column size plus 1′-0″ to allow placement of the column reinforcement as shown in see Figures 5.3.3-1 and 5.3.3-2.

Crossbeams on box girder type of construction shall be designed as a T beam utilizing the flange in compression, assuming the deck slab acts as a flange for positive moment and bottom slab a flange for negative moment. The effective overhang of the flange on a cantilever beam shall be limited to six times the flange thickness.

The bottom slab thickness is frequently increased near the crossbeam in order to keep the main box girder compressive stresses to a desirable level for negative girder moments as shown in Figures 5.3.3-1 and 5.3.3-2. This bottom slab flare also helps resist negative crossbeam moments. Consideration should be given to flaring the bottom slab at the crossbeam for designing the cap even if it is not required for resisting main girder moments.

5.3.3.C Loads

For concrete box girders the superstructure dead load shall be considered as uniformly distributed over the crossbeam. For concrete box girders the live load shall be considered as the truck load directly to the crossbeam from the wheel axles. Truck axles shall be moved transversely over the crossbeam to obtain the maximum design forces for the crossbeam and supporting columns.

5.3.3.D Reinforcement Design and Details

The crossbeam section consists of rectangular section with overhanging deck and bottom slab if applicable. The effective width of the crossbeam flange overhang shall be taken as the lesser of:

- 6 times slab thickness,
- ⅒ of column spacing, or
- ⅕₀ of crossbeam cantilever as shown in Figure 5.3.3-3.

The crossbeam shall have a minimum width of column dimension plus 6″.

Crossbeam is usually cast to the fillet below the top slab. To avoid cracking of concrete on top of the crossbeam, construction reinforcement shall be provided at approximately 3″ below the construction joint. The design moment for construction reinforcement shall be the factored negative dead load moment due to the weight of crossbeam and adjacent 10′ of superstructure each side. The total amount of construction reinforcement shall be adequate to develop an ultimate moment at the critical section at least 1.2 times the cracking moment M_{cr}.

Figure 5.3.3-1 Crossbeam Top Reinforcement for Skew Angle ≤ 25°

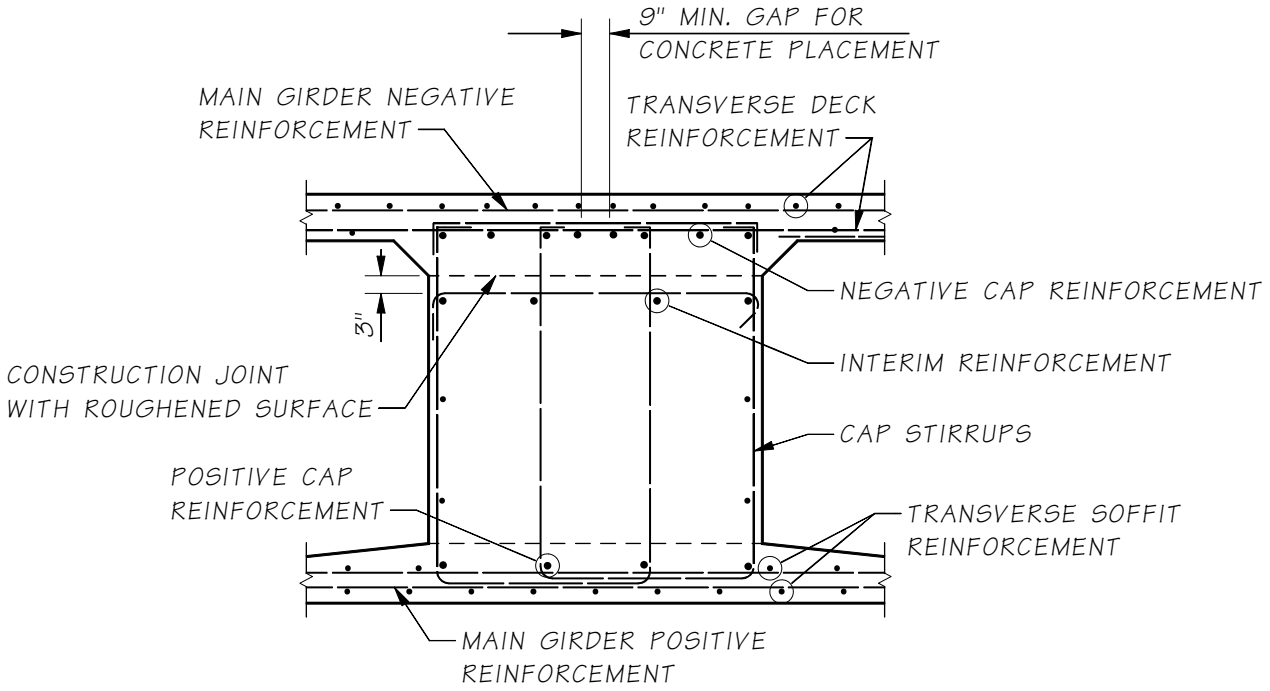

Figure 5.3.3-2 Crossbeam Top Reinforcement for Skew Angle > 25°

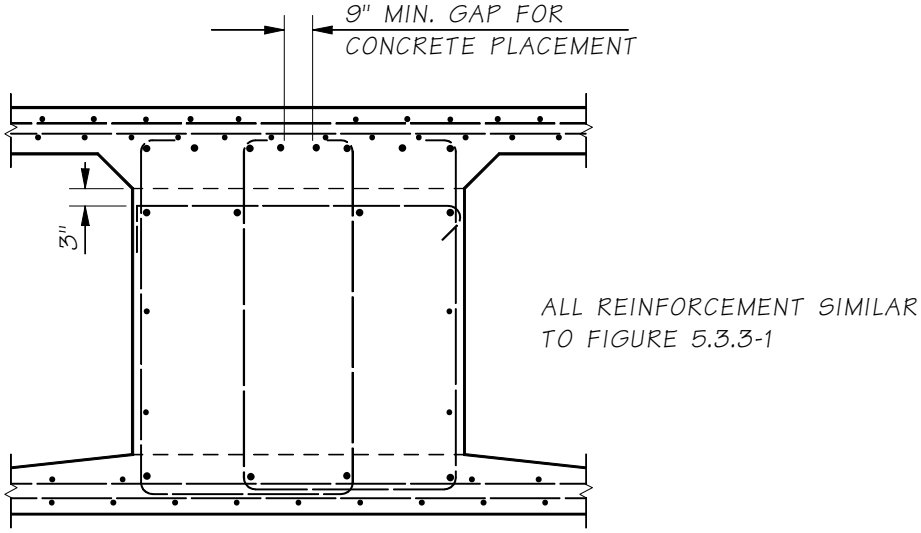

Figure 5.3.3-3 Effective Width of Crossbeam

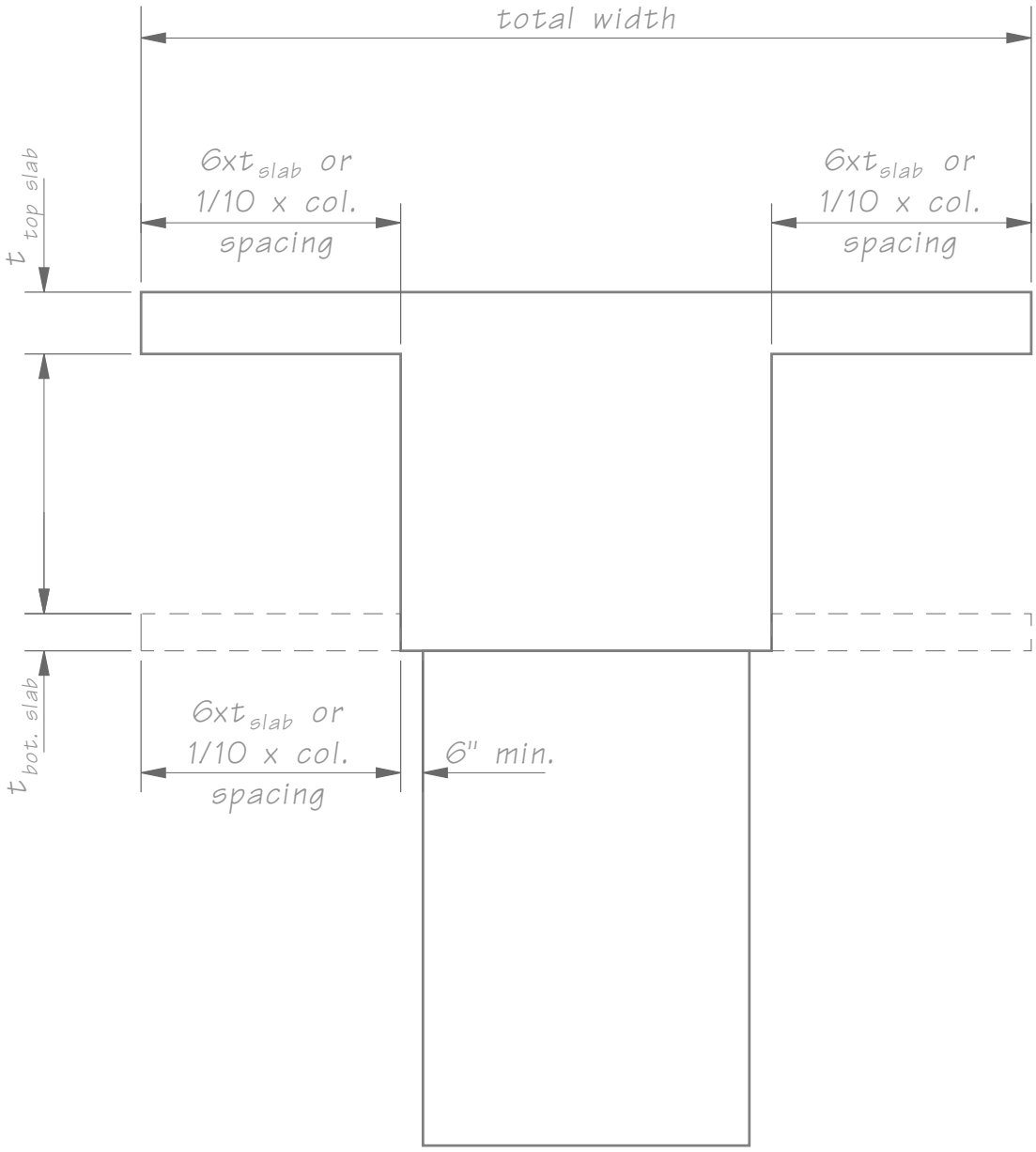

Special attention should be given to the details to ensure that the column and crossbeam reinforcement will not interfere with each other. This can be a problem especially when round columns with a great number of vertical bars must be meshed with a considerable amount of positive crossbeam reinforcement passing over the columns.

5.3.3.D.1 *Top Reinforcement*

The negative moment critical section shall be at the ¼ point of the square or equivalent square columns.

1. **When Skew Angle ≤ 25°**

   If the bridge is tangent or slightly skewed deck transverse reinforcement is normal or radial to centerline bridge, the negative cap reinforcement can be placed either in contact with top deck negative reinforcement (see Figure 5.3.3-1) or directly under the main deck reinforcement.

2. **When Skew Angle > 25°**

   When the structure is on a greater skew and the deck steel is normal or radial to the longitudinal centerline of the bridge, the negative cap reinforcement should be lowered to below the main deck reinforcement (see Figure 5.3.3-2).

3. **To avoid cracking of concrete**

   Interim reinforcement is required below the construction joint in crossbeams.

5.3.3.D.2 *Skin Reinforcement*

Longitudinal skin reinforcement shall be provided in accordance with AASHTO LRFD Section 5.6.7.

5.3.4 End Diaphragm

5.3.4.A Basic Geometry

Bearings at the end diaphragms are usually located under the girder stems to transfer loads directly to the pier as shown in Figure 5.3.4-1. In this case, the diaphragm width shall be equal to or greater than bearing grout pads as shown Figure 5.3.4-2.

Designer shall provide access space for maintenance and inspection of bearings.

Allowance shall be provided to remove and replace the bearings. Lift point locations, jack capacity, number of jacks, and maximum permitted lift shall be shown in the plan details.

Figure 5.3.4-1 Bearing Locations at End Diaphragm

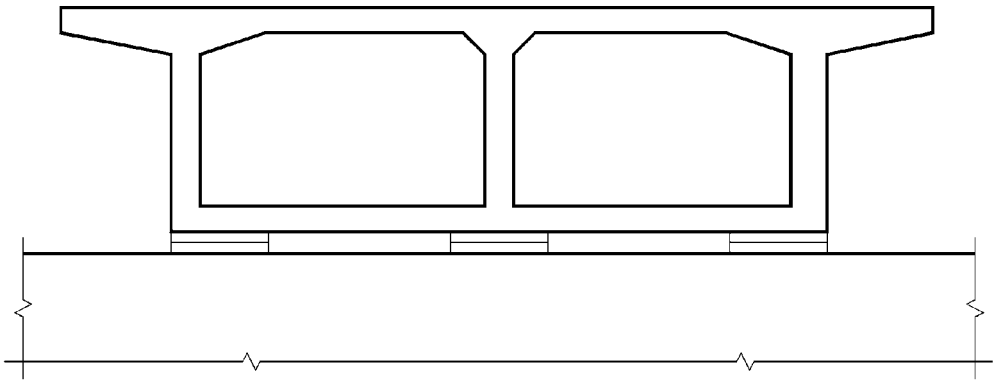

Figure 5.3.4-2 L-shape Abutment End Diaphragm

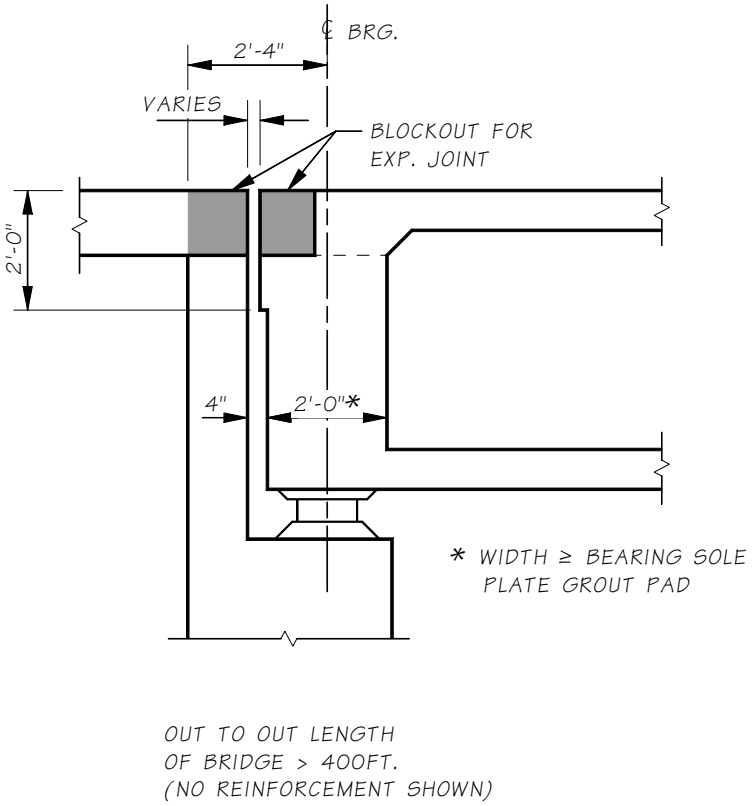

The most commonly used type of end diaphragm is shown in Figure 5.3.4-3. The dimensions shown here are used as a guideline and should be modified if necessary. This end diaphragm is used with a stub abutment and overhangs the stub abutment. It is used on bridges with an overall length less than 400 feet. If the overall length exceeds 400 feet, an L-shape abutment should be used.

Figure 5.3.4-3 End Diaphragm with Stub Abutment

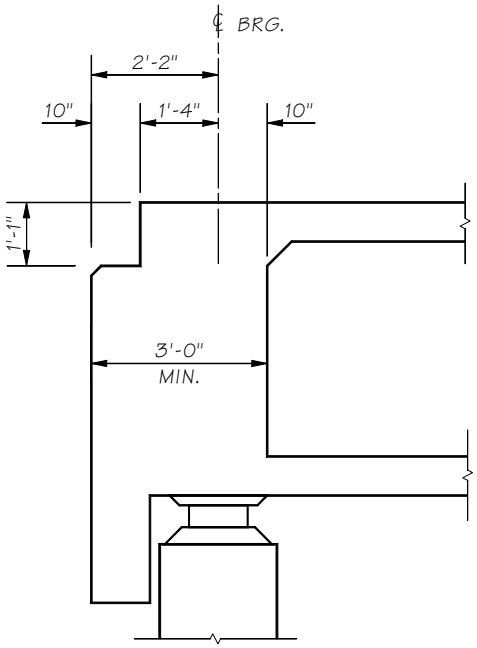

5.3.4.B Reinforcing Steel Details

Typical reinforcement details for an end diaphragm are shown in Figure 5.3.4-4.

Figure 5.3.4-4 Typical End Diaphragm Reinforcement

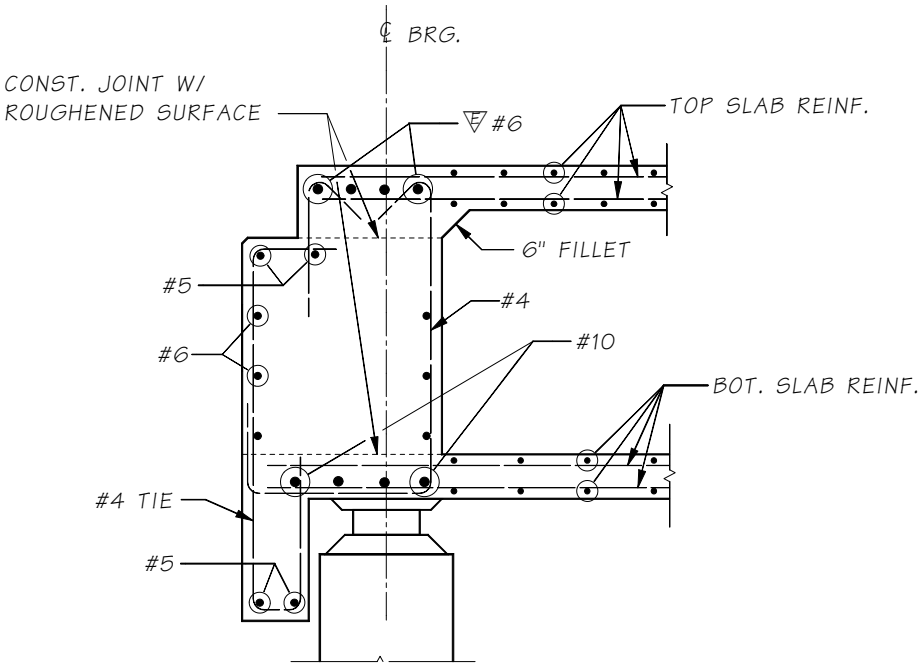

5.3.5 *Dead Load Deflection and Camber*

Camber is the adjustment made to the vertical alignment to compensate for the anticipated dead load deflection and the long-term deflection caused by shrinkage and creep. Estimating long-term deflection and camber for reinforced concrete flexural members shall be based on the creep coefficient given in Section 5.1.1E. Alternatively, Table 5.3.5-1 may be used for long-term camber multipliers.

Table 5.3.5-1 Long-term Camber Multipliers

	Multiplier Coefficient
Girder Adjacent to Existing/Stage Construction	
Deflection (downward) — apply to the elastic deflection due to the weight of member	1.90
Deflection (downward) — apply to the elastic deflection due to superimposed dead load only	2.20
Girder Away From Existing/Stage Construction	
Deflection (downward) — apply to the elastic deflection due to the weight of member	2.70
Deflection (downward) — apply to the elastic deflection due to superimposed dead load only	3.00

In addition to dead load deflection, forms and falsework tend to settle and compress under the weight of freshly placed concrete. The amount of this take-up is dependent upon the type and design of the falsework, workmanship, type and quality of materials and support conditions. The camber shall be modified to account for anticipated take-up in the falsework.

5.3.6 Thermal Effects

Concrete box girder bridges are subjected to stresses and/or movements resulting from temperature variation. Temperature effects result from time-dependent variations in the effective bridge temperature and from temperature differentials within the bridge superstructure.

5.3.6.A Effective Bridge Temperature and Movement

Proper temperature expansion provisions are essential in order to ensure that the structure will not be damaged by thermal movements. These movements, in turn, induce stresses in supporting elements such as columns or piers, and result in horizontal movement of the expansion joints and bearings. For more details see Chapter 8.

5.3.6.B Differential Temperature

Although time-dependent variations in the effective temperature have caused problems in both reinforced and prestressed concrete bridges, detrimental effects caused by temperature differential within the superstructure have occurred only in prestressed bridges. Therefore, computation of stresses and movements resulting from the vertical temperature gradients is not included in this chapter. For more details, see AASHTO Guide Specifications, Thermal Effects on Concrete Bridge Superstructures dated 1989.

5.3.7 Hinges

Hinges are one of the weakest links of box girder bridges subject to earthquake forces and it is desirable to eliminate hinges or reduce the number of hinges. For more details on the design of hinges, see Section 5.4.

Designer shall provide access space or pockets for maintenance and inspection of bearings.

Allowance shall be provided to remove and replace the bearings. Lift point locations, maximum lift permitted, jack capacity, and number of jacks shall be shown in the hinge plan details.

5.3.8 Drain Holes

Drain holes shall be placed in the bottom slab at the low point of each cell to drain curing water during construction and any rain water that leaks through the deck slab. Additional drains shall be provided as a safeguard against water accumulation in the cell (especially when waterlines are carried by the bridge). In some instances, drainage through the bottom slab is difficult and other means shall be provided (i.e., cells over large piers and where a sloping exterior web intersects a vertical web). In this case, a horizontal drain shall be provided through the vertical web. Figure 5.3.8-1 shows drainage details for the bottom slab of concrete box girder bridges with steel wire screen.

Figure 5.3.8-1 Drain Hole Details

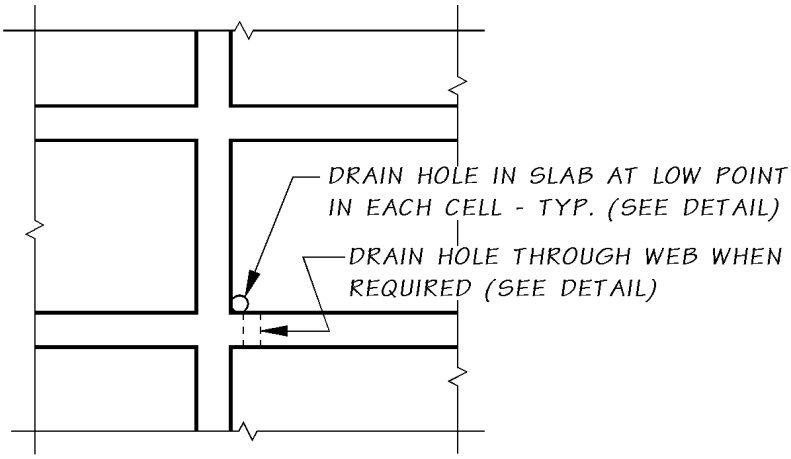

DRAIN HOLES
SHOWN ON FRAMING PLAN

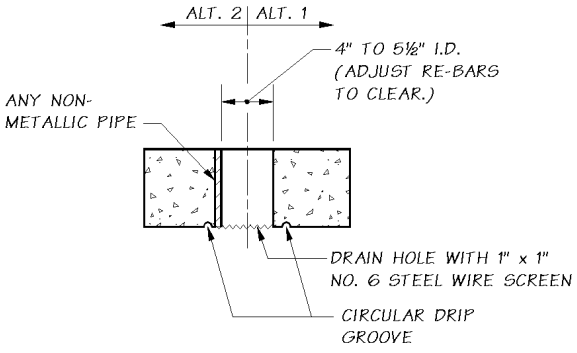

BOTTOM SLAB
DRAIN HOLE DETAIL

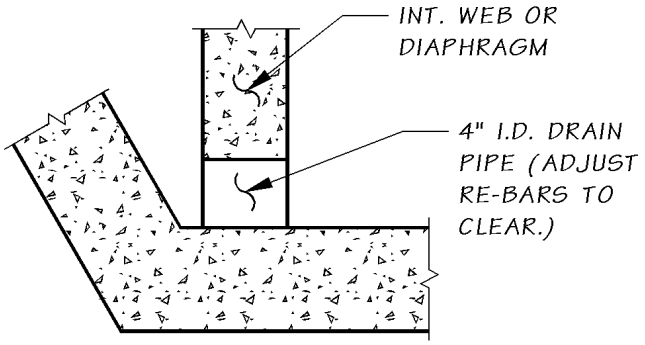

WEB DRAIN
HOLE DETAIL

5.4 Hinges and Inverted T-Beam Pier Caps

Hinges and inverted T-beam pier caps require special design and detailing considerations. Continuous hinge shelves (both top and bottom projecting shelves) and continuous ledges of inverted T-beam pier caps, which support girders, are shown in Figure 5.4-1. In each case, vertical tensile forces (hanger tension) act at the intersection of the web and the horizontal hinge shelf or ledge. In the ledges of inverted T-beam pier caps, passage of live loads may also cause reversing torsional stresses which together with conventional longitudinal shear and bending produce complex stress distributions in the ledges[7, 8].

Figure 5.4-2 provides minimum shelf or ledge support lengths (N) and provides positive longitudinal linkage (e.g., earthquake restrainers) in accordance with the current AASHTO LRFD *Guide Specifications for Seismic Design* requirements. Design considerations for beam ledges, inverted T-beam and hinges are given in AASHTO LRFD Section 5.8.4.3.

Inverted T-beam pier caps shall not be used for prestressed concrete girder bridges unless approved by the WSDOT Bridge Design Engineer.

Figure 5.4-1 Hinge and Inverted T-Beam Pier Cap

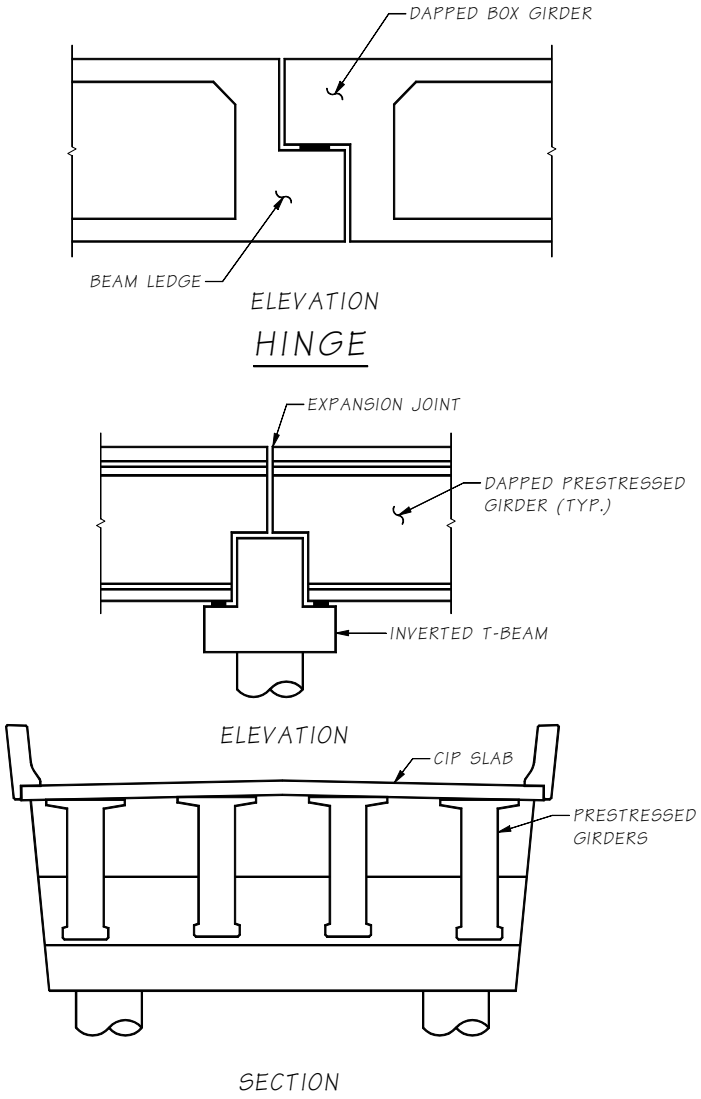

Figure 5.4-2 In-Span Hinge

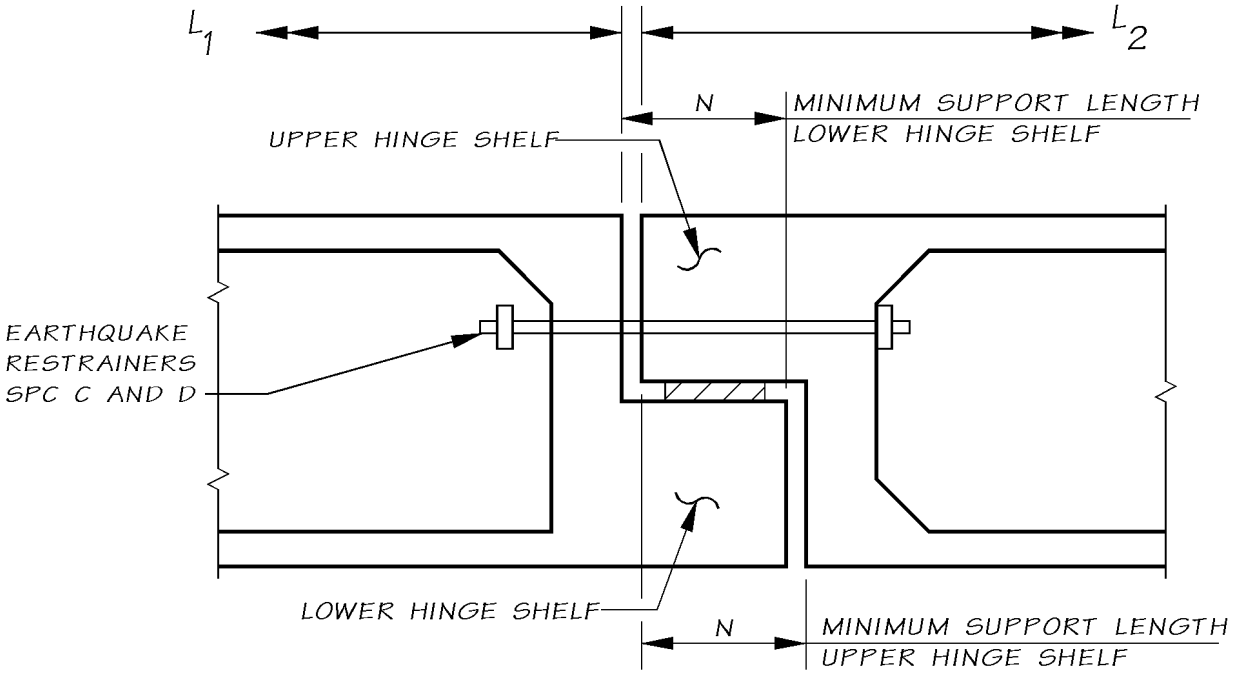

5.5 Bridge Widenings

This section provides general guidance for the design of bridge widenings. Included are additions to the substructure and the superstructure of reinforced concrete box girder, flat slab, T-beam, and prestressed concrete girder bridges. For additional information, see ACI Committee Report, Guide for Widening Highway Bridges[9].

5.5.1 Review of Existing Structures

5.5.1.A General

Obtain the following documents from existing records for preliminary review, design, and plan preparation:

1. The "As-Built" contract plans, usually available from the "Bridge Engineering Information System" on the Bridge and Structures Office website.
2. The original contract plans and special provisions, which can be obtained from Engineering Records (Plans Vault), Records Control or the "Bridge Engineering Information System" on the Bridge and Structures Office website.
3. Check with the WSDOT Bridge Preservation Office for records of any unusual movements/rotations and other structural information.
4. Original design calculations, which are stored in State Archives.
5. Current field measurements. Current field measurements of existing pier crossbeam locations are recommended so that new prestressed concrete girders are not fabricated too short or too long. This is particularly important if piers have been constructed with different skews.
6. Original and current Foundation Reports from the Materials Lab or from the Plans Vault.
7. Change Order files to the original bridge contract Bridge Archive Engineer.

5.5.1.B Original Contract Plans and Special Provisions

Location and size of reinforcement, member sizes and geometry, location of construction joints, details, allowable design soil pressure, and test hole data are given on the plans. Original contract plans can be more legible than the microfilm copies.

The special provisions may include pertinent information that is not covered on the plans or in the AASHTO *LRFD Specifications*.

5.5.1.C Original Calculations

The original calculations should be reviewed for any "special assumptions" or office criteria used in the original design. The actual stresses in the structural members, which will be affected by the widening, should be reviewed. This may affect the structure type selected for the widening.

5.5.1.D Final Records

For major widening/renovation projects, the Final Records should be reviewed particularly for information about the existing foundations and piles. Sometimes the piles indicated on the original plans were omitted, revised, or required preboring. Final Records are available from Records Control or Bridge Records (Final Records on some older bridges may be in storage at the Materials Lab).

5.5.2 Analysis and Design Criteria

5.5.2.A General

Each widening represents a unique situation and construction operations may vary between widening projects. The guidelines in this section are based on years of WSDOT design experience with bridge widenings.

5.5.2.A.1 *Appearance*

The widening of a structure should be accomplished in such a manner that the existing structure does not look "added on to." When this is not possible, consideration should be given to enclosure walls, cover panels, paint, or other aesthetic treatments. Where possible and appropriate, the structure's appearance should be improved by the widening.

5.5.2.A.2 *Materials*

Preferably, materials used in the construction of the widening shall have the same thermal and elastic properties as the materials in the original structure.

5.5.2.A.3 *Load Distribution and Construction Sequence*

The members of the widening should be proportioned to provide similar longitudinal and transverse load distribution characteristics as the existing structure. Normally this can be achieved by using the same cross sections and member lengths that were used in the existing structure.

The construction sequence and degree of interaction between the widening and the existing structure, after completion, shall be fully considered in determining the distribution of the dead load for design of the widening and stress checks for the existing structure.

A suggested construction sequence or stage construction shall be clearly shown in the plans to avoid confusion and misinterpretation during construction. A typical construction sequence may involve placing the deck concrete, removing the falsework, placing the concrete for the closure strip, and placing the concrete for the traffic barrier.

5.5.2.A.4 *Specifications*

The design of the widening shall conform to the current AASHTO *LRFD Bridge Design Specifications* and the *Standard Specifications*.

5.5.2.A.5 *Geometrical Constraints*

The overall appearance and geometrical dimensions of the superstructure and columns of the widening should be the same or as close as possible to those of the existing structure. This is to ensure that the widening will have the same appearance and similar structural stiffness as the original structure.

5.5.2.A.6 *Overlay*

It should be established at the preliminary plan stage if an overlay is required as part of the widening.

5.5.2.A.7 *Strength of the Existing Structure*

A review of the strength of the main members of the existing structure shall be made for construction conditions utilizing AASHTO *LRFD Specifications*.

A check of the existing main members after attachment of the widening shall be made for the final design loading condition.

If the existing structural elements do not have adequate strength, consult your Design Unit Manager or in the case of consultants, contact the Consultant Liaison Engineer for appropriate guidance.

If significant demolition is required on the existing bridge, consideration should be given to requesting concrete strength testing for the existing bridge and including this information in the contract documents.

5.5.2.A.8 *Special Considerations*

1. For structures that were originally designed for HS-20 loading, HL-93 shall be used to design the widening. For structures that were originally designed for less than HS-20, consideration should be given to replacing the structure instead of widening it.
2. Longitudinal joints are not permitted in order to eliminate potentially hazardous vehicle control problems.
3. The *Standard Specifications* do not permit falsework to be supported from the existing structure unless the Plans and Specifications state otherwise. This requirement eliminates the transmission of vibration from the existing structure to the widening during construction. The existing structure may still be in service.
4. For narrow widenings where the Plans and Specifications require that the falsework be supported from the original structure (e.g., there are no additional girders, columns, crossbeams, or closure strips), there shall be no external rigid supports such as posts or falsework from the ground. Supports from the ground do not permit the widening to deflect with the existing structure when traffic is on the existing structure. This causes the uncured concrete of the widening to crack where it joins the existing structure. Differential dead load deflection during construction shall be given consideration.
5. Precast members may be used to widen existing CIP structures. This method is useful when the horizontal or vertical clearances during construction are insufficient to build CIP members.
6. The alignment for diaphragms for the widening shall generally coincide with the existing diaphragms.
7. When using battered piles, estimate the pile tip elevations and ensure that they will have ample clearance from all existing piles, utilities, or other obstructions. Also check that there is sufficient clearance between the existing structure and the pile driving equipment.

5.5.2.B Seismic Design Criteria for Bridge Widenings

Seismic design of bridge widenings shall be in accordance with Section 4.3.

5.5.2.C Substructure

5.5.2.C.1 *Selection of Foundation*

1. The type of foundation to be used to support the widening shall generally be the same as that of the existing structure unless otherwise recommended by the Geotechnical Engineer. The effects of possible differential settlement between the new and the existing foundations shall be considered.
2. Consider present bridge site conditions when determining new foundation locations. The conditions include: overhead clearance for pile driving equipment, horizontal clearance requirements, working room, pile batters, channel changes, utility locations, existing embankments, and other similar conditions.

5.5.2.C.2 *Scour and Drift*

Added piles and columns for widenings at water crossings may alter stream flow characteristics at the bridge site. This may result in pier scouring to a greater depth than experienced with the existing configuration. Added substructure elements may also increase the possibility of trapping drift. The Hydraulics Engineer shall be consulted concerning potential problems related to scour and drift on all widenings at water crossings.

5.5.2.D Superstructure

5.5.2.D.1 *Camber*

Accurate prediction of dead load deflection is more important for widenings than for new bridges, since it is essential that the deck grades match.

To obtain a smooth transition in transverse direction of the bridge deck, the camber of the girder adjacent to the existing structure shall be adjusted for the difference in camber between new and existing structure. A linear interpolation may be used to adjust the camber of the girders located away from the existing structure. The multipliers for estimating camber of new structure may be taken as shown in Table 5.3.5-1.

5.5.2.D.2 *Closure Strip*

Except for narrow deck slab widenings a closure strip is required for all widenings. The width shall be the minimum required to accommodate the necessary reinforcement and for form removal. Reinforcement which extends through the closure strip shall be investigated. Shear shall be transferred across the closure strip by shear friction and/or shear keys.

All falsework supporting the widening shall be released and formwork supporting the closure strip shall be supported from the existing and newly widened structures prior to placing concrete in the closure strip. Because of deck slab cracking experienced in widened concrete decks, closure strips are required unless the mid-span dead load camber is ½″ or less.

In prestressed concrete girder bridge widenings, the closure shall extend through the intermediate and end diaphragms. The diaphragms shall be made continuous with existing diaphragms.

5.5.2.D.3 *Stress Levels and Deflections in Existing Structures*

Caution is necessary in determining the cumulative stress levels, deflections, and the need for shoring in existing structural members during rehabilitation projects.

The designer shall investigate the adequacy of the existing structure adjacent to the widening for any additional loads, taking into account the loss of removed components.

For example, a T-beam bridge was originally constructed on falsework and the falsework was released after the deck slab concrete gained strength. As part of a major rehabilitation project, the bridge was closed to traffic and the entire deck slab was removed and replaced without shoring. Without the deck slab, the stems behave as rectangular sections with a reduced depth and width. The existing stem reinforcement was not originally designed to support the weight of the deck slab without shoring. After the new deck slab was placed, wide cracks from the bottom of the stem opened, indicating that the reinforcement was overstressed. This overstress resulted in a lower load rating for the newly rehabilitated bridge. This example shows the need to shore up the remaining T-beam stems prior to placing the new deck slab so that excessive deflections do not occur and overstress in the existing reinforcing steel is prevented.

It is necessary to understand how the original structure was constructed, how the rehabilitated structure is to be constructed, and the cumulative stress levels and deflections in the structure from the time of original construction through rehabilitation.

5.5.2.E Stability of Widening

For relatively narrow box girder and T-beam widenings, symmetry about the vertical axis should be maintained because lateral loads are critical during construction. When symmetry is not possible, use pile cap connections, lateral connections, or special falsework. A minimum of two webs is generally recommended for box girder widenings. For T-beam widenings that require only one additional web, the web should be centered at the axis of symmetry of the deck slab. Often the width of the closure strip can be adjusted to accomplish this.

5.5.3 Removing Portions of the Existing Structure

Portions of the existing structure to be removed shall be clearly indicated on the plans. Where a clean break line is required, a ¾″ deep saw cut shall be specified for a deck slab with normal wear and a ½″ deep saw cut for worn deck slabs. In no case, however, shall the saw blade cut or nick the main transverse top slab reinforcement. The special provisions shall state that care will be taken not to damage any reinforcement which is to be saved. Hydromilling is preferred where reinforcing bar cover is shallow and can effectively remove delaminated decks because of the good depth control it offers. When greater depths of slab are to be removed, special consideration should be given to securing exposed reinforcing bars to prevent undue vibration and subsequent fatigue cracks from occurring in the reinforcing bars.

The current General Special Provisions should be reviewed for other specific requirements on deck slab removal.

Removal of any portion of the main structural members should be held to a minimum. Careful consideration shall be given to the construction conditions, particularly when the removal affects the existing frame system. In extreme situations, preloading by jacking is acceptable to control stresses and deflections during the various stages of removal and construction. Removal of the main longitudinal deck slab reinforcement should be

kept to a minimum. See "Slab Removal Detail" Figure 5.5.4-1 for the limiting case for the maximum allowable removal.

The plans shall include a note that critical dimensions and elevations are to be verified in the field prior to the fabrication of precast units or expansion joint assemblies.

In cases where an existing sidewalk is to be removed but the supporting slab under the sidewalk is to be retained, Region personnel should check the feasibility of removing the sidewalk. Prior to design, Region personnel should make recommendations on acceptable removal methods and required construction equipment. The plans and specifications shall then be prepared to accommodate these recommendations. This will ensure the constructibility of plan details and the adequacy of the specifications.

5.5.4 Attachment of Widening to Existing Structure

5.5.4.A General

5.5.4.A.1 *Lap and Mechanical Splices*

To attach a widening to an existing structure, the first choice is to utilize existing reinforcing bars by splicing new bars to existing. Lap splices or mechanical splices should be used. However, it may not always be possible to splice to existing reinforcing bars and spacing limitations may make it difficult to use mechanical splices.

5.5.4.A.2 *Welding Reinforcement*

Existing reinforcing steel may not be readily weldable. Mechanical splices should be used wherever possible. If welding is the only feasible means, the chemistry of the reinforcing steel must be analyzed and acceptable welding procedures developed.

5.5.4.A.3 *Drilling Into Existing Structure*

It may be necessary to drill holes and set dowels in epoxy resin in order to attach the widening to the existing structure.

When drilling into heavily reinforced areas, chipping should be specified to expose the main reinforcing bars. If it is necessary to drill through reinforcing bars or if the holes are within 4 inches of an existing concrete edge, core drilling shall be specified. Core drilled holes shall be roughened before resin is applied. If this is not done, a dried residue, which acts as a bond breaker and reduces the load capacity of the dowel, will remain. Generally, the drilled holes are ⅛″ in diameter larger than the dowel diameter for #5 and smaller dowels and ¼″ in diameter larger than the dowel diameter for #6 and larger dowels.

In special applications requiring drilled holes greater than 1½″ diameter or deeper than 2′, core drilling shall be specified. These holes shall also be intentionally roughened prior to applying epoxy resin.

Core drilled holes shall have a minimum clearance of 3″ from the edge of the concrete and 1″ clearance from existing reinforcing bars in the existing structure. These clearances shall be noted in the plans.

5.5.4.A.4 *Dowelling Reinforcing Bars Into the Existing Structure*

1. Dowel bars shall be set with an approved epoxy resin. The existing structural element shall be checked for its adequacy to transmit the load transferred to it from the dowel bars.

2. Dowel spacing and edge distance affect the allowable tensile dowel loads. Allowable tensile loads, dowel bar embedment, and drilled hole sizes for reinforcing bars (Grade 60) used as dowels and set with an approved epoxy resin are shown in Table 5.5.4-1. These values are based on an edge clearance greater than 3″, a dowel spacing greater than 6″, and are shown for both uncoated and epoxy coated dowels. Table 5.5.4-2 lists dowel embedment lengths when the dowel spacing is less than 6″. Note that in Table 5.5.4-2 the edge clearance is equal to or greater than 3″, because this is the minimum edge clearance for a drilled hole from a concrete edge.

   If it is not possible to obtain these embedments, such as for traffic railing dowels into existing deck slabs, the allowable load on the dowel shall be reduced by the ratio of the actual embedment divided by the required embedment.

3. The embedments shown in Table 5.5.4-1 and Table 5.5.4-2 are based on dowels embedded in concrete with f'_c=4,000 psi.

Table 5.5.4-1 Allowable Tensile Load for Dowels Set With Epoxy Resin f'_c = 4,000 psi, Grade 60 Reinforcing Bars, Edge Clearance ≥ 3″, and Spacing ≥ 6″

Bar Size	Allowable Design Tensile Load, T* (kips)	Drill Hole Size (in)	Required Embedment, L_e	
			Uncoated (in)	Epoxy Coated (in)
#4	12.0	⅝	7	8
#5	18.6	¾	8	9
#6	26.4	1	9	10
#7	36.0	1⅛	11	12
#8	47.4	1¼	13	14.5
#9	60.0	1⅜	16	17½
#10	73.6	1½	20	22
#11	89.0	1⅝	25	28

* Allowable Tensile Load (Strength Design) = $(f_y)(A_s)$.

Table 5.5.4-2 Allowable Tensile Load for Dowels Set With Epoxy Resin, f'_c=4,000 psi, Grade 60 Reinforcing Bars, Edge Clearance ≥ 3″, and Spacing < 6″

Bar Size	Allowable Design Tensile Load, T* (kips)	Drill Hole Size (in)	Required Embedment, L_e	
			Uncoated (in)	Epoxy Coated (in)
#4	12.0	⅝	9½	10½
#5	18.6	¾	10½	11½
#6	26.4	1	11½	12½
#7	36.0	1⅛	13½	15
#8	47.4	1¼	16½	18
#9	60.0	1⅜	20	22
#10	73.6	1½	24	27
#11	89.0	1⅝	30	33

*Allowable Tensile Load (Strength Design) = $(f_y)(A_s)$.

5.5.4.A.5 *Shear Transfer Across a Dowelled Joint*

Shear shall be carried across the joint by shear friction. The existing concrete surface shall be intentionally roughened. Both the concrete and dowels shall be considered effective in transmitting the shear force. Chipping shear keys in the existing concrete can also be used to transfer shear across a dowelled joint, but is expensive.

5.5.4.A.6 *Preparation of Existing Surfaces for Concreting*

See "Removing Portions of Existing Concrete" in the General Special Provisions and *Standard Specifications* Section 6-02.3(12) for requirements. Unsound, damaged, dirty, porous, or otherwise undesirable old concrete shall be removed, and the remaining concrete surface shall be clean, free of laitance, and intentionally roughened to ensure proper bond between the old and new concrete surfaces.

5.5.4.A.7 *Control of Shrinkage and Deflection on Connecting Reinforcement*

Dowels that are fixed in the existing structure may be subject to shear as a result of longitudinal shrinkage and vertical deflection when the falsework is removed. These shear forces may result in a reduced tensile capacity of the connection. When connecting the transverse reinforcing bars across the closure strip is unavoidable, the interaction between shear and tension in the dowel or reinforcing bar shall be checked. The use of wire rope or sleeved reinforcement may be acceptable, subject to approval by your Bridge Design Unit Manager.

Where possible, transverse reinforcing bars shall be spliced to the existing reinforcing bars in a blocked-out area which can be included in the closure strip. Nominal, shear friction, temperature and shrinkage, and distribution reinforcing bars shall be bent into the closure strip.

Rock bolts may be used to transfer connection loads deep into the existing structure, subject to the approval of your Bridge Design Unit Manager.

5.5.4.A.8 *Post-tensioning*

Post-tensioning of existing crossbeams may be utilized to increase the moment capacity and to eliminate the need for additional substructure. Generally, an existing crossbeam can be core drilled for post-tensioning if it is less than 30′ long. The amount of drift in the holes alignment may be approximately 1″ in 20′. For crossbeams longer than 30′, external post-tensioning should be considered.

For an example of this application, refer to Contract 3846, Bellevue Transit Access – Stage 1.

5.5.4.B Connection Details

The details on the following sheets are samples of details which have been used for widening bridges. They are informational and are not intended to restrict the designer's judgment.

5.5.4.B.1 *Box Girder Bridges*

Figures 5.5.4-1 through 5.5.4-6 show typical details for widening box girder bridges.

Welding or mechanical butt splice are preferred over dowelling for the main reinforcement in crossbeams and columns when it can be done in the horizontal or flat position. It shall be allowed only when the bars to be welded are free from restraint at one end during the welding process.

Figure 5.5.4-1 Deck Slab Removal Detail

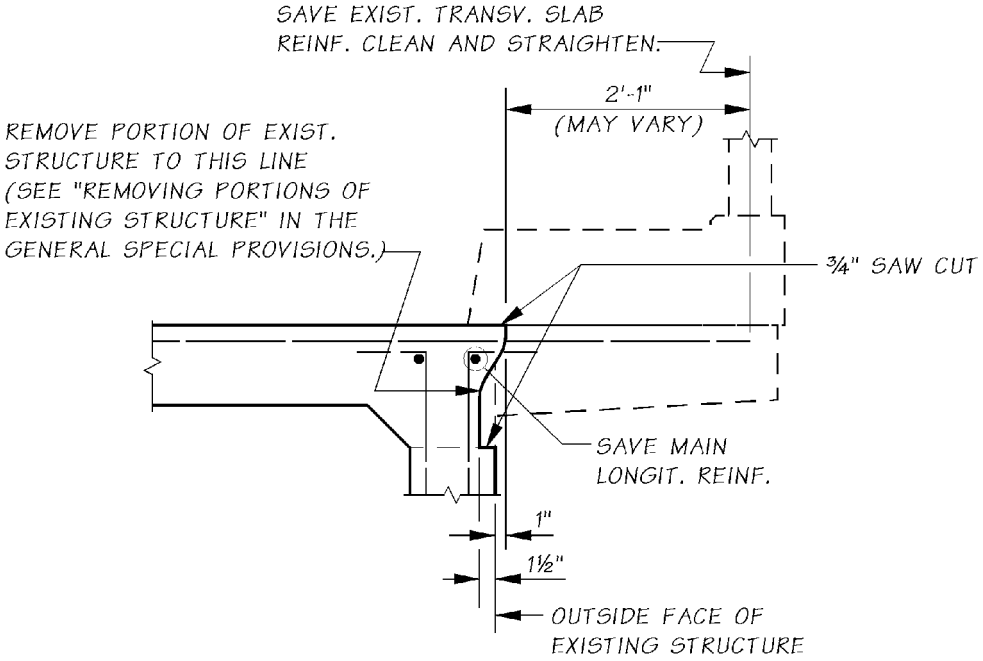

Figure 5.5.4-2 Box Girder Section in Span

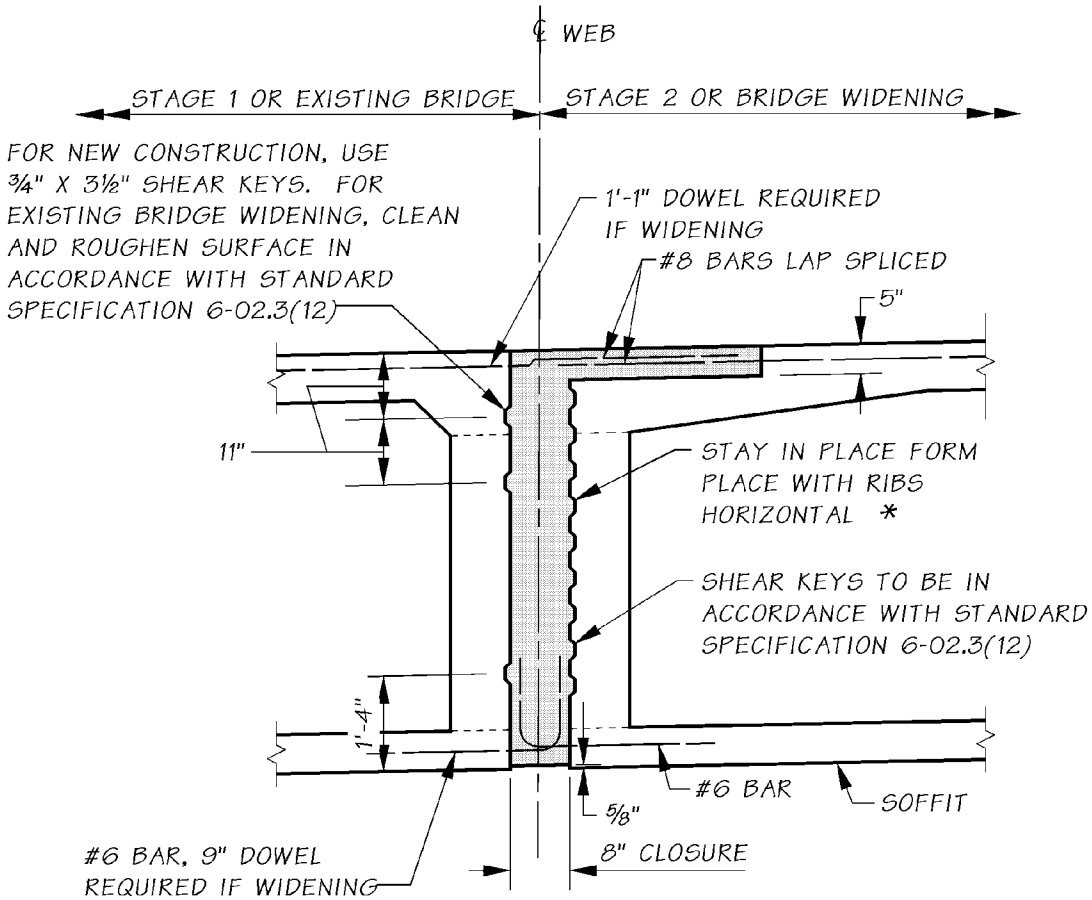

STAY IN PLACE FORM DETAIL
FOR BOX GIRDER STAGED CONSTRUCTION
OR WIDENING

* STAY IN PLACE FORMS SHALL BE SOLID GALVANIZED SHEET METAL. FORMS MUST BE VERTICALLY BRACED AS NECCESSARY TO PREVENT BOWING DURING CONCRETE PLACEMENT. TIMBER BRACING MUST BE REMOVED. IF STEEL WALES OR TIES ARE USED, THEY MAY BE LEFT IN PLACE. THE CONTRACTOR SHALL SUBMIT DESIGN CALCULATIONS IN ACCORDANCE WITH STANDARD SPECIFICATIONS 6-02.3(16) AND 6-02.3(17).

Figure 5.5.4-3 Box Girder Section Through Crossbeam

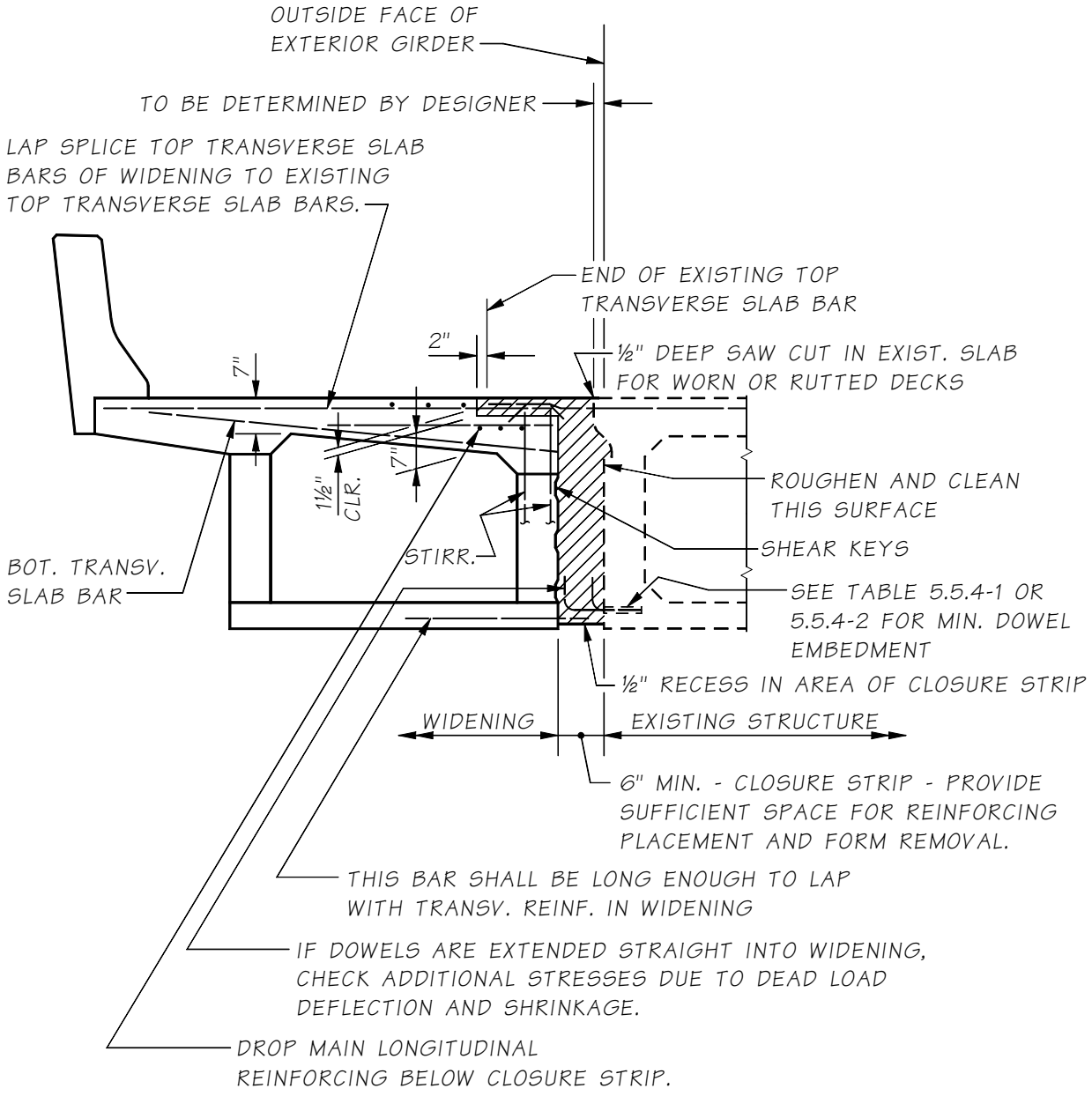

Figure 5.5.4-4 Box Girder Section in Span at Diaphragm Alternate I

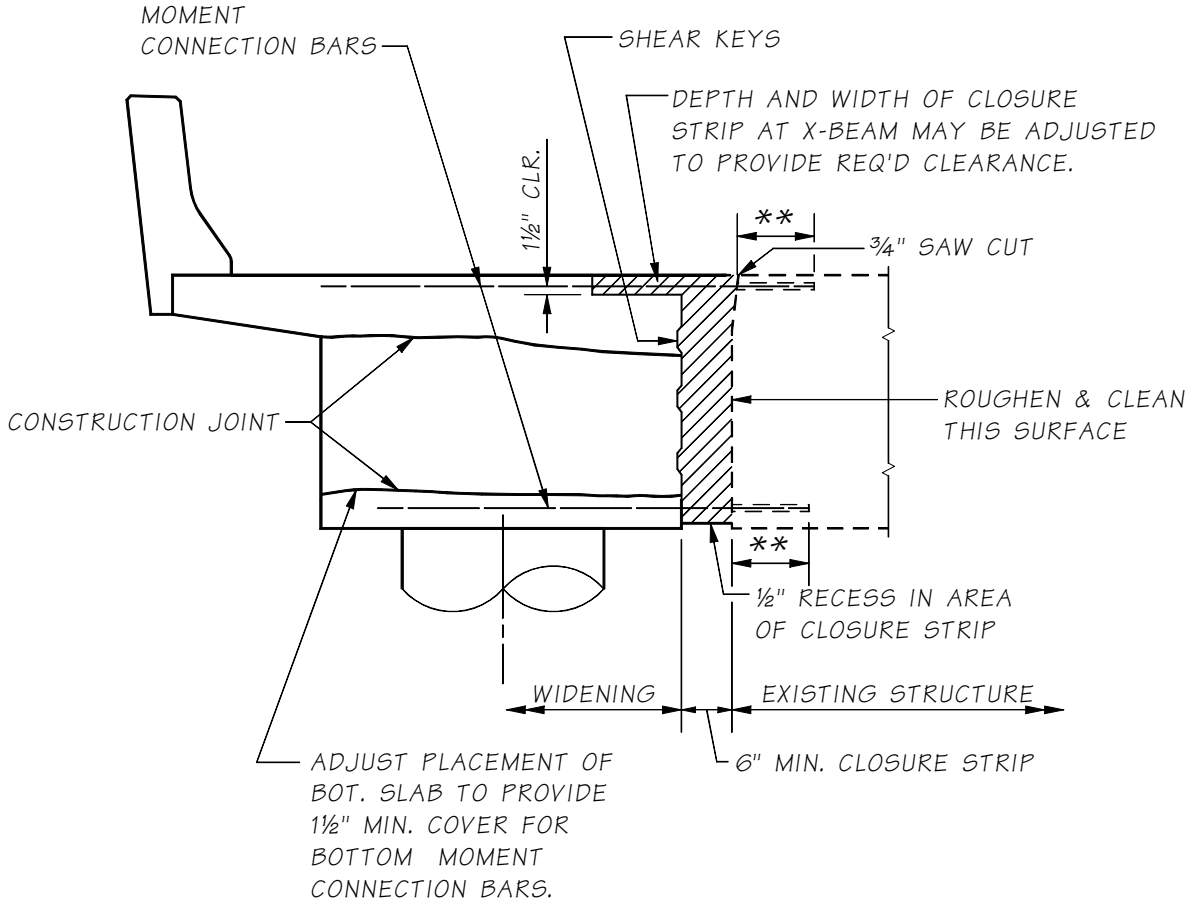

SEE "BOX GIRDER - SECTION IN SPAN" FOR ADDITIONAL DETAILS.

** SEE TABLE 5.5.4-1 OR 5.5.4-2
FOR MINIMUM DOWEL EMBEDMENT

Figure 5.5.4-5 Box Girder Section in Span at Diaphragm Alternate II

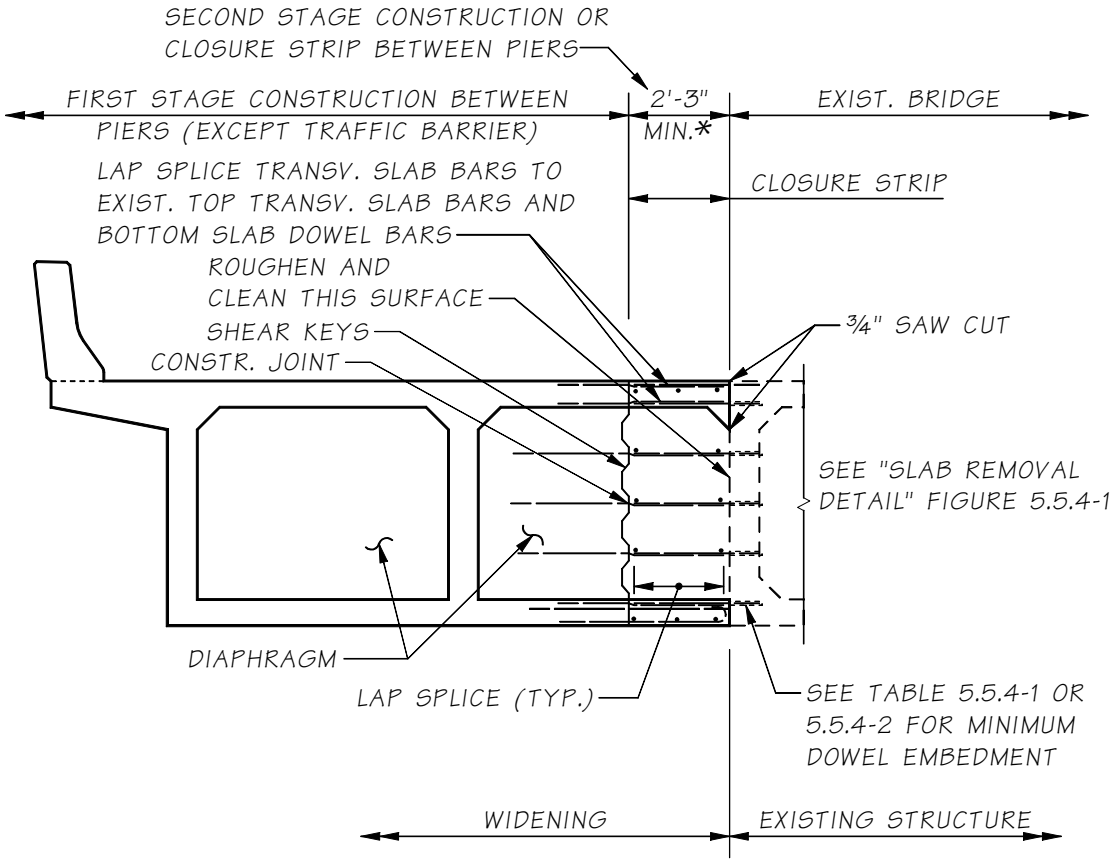

* IF LAP SPLICE EXCEEDS 2'-0", INCREASE WIDTH OF CLOSURE STRIP TO ACCOMMODATE INCREASED LAP SPLICE.

Figure 5.5.4-6 Narrow Box Girder Widening Details

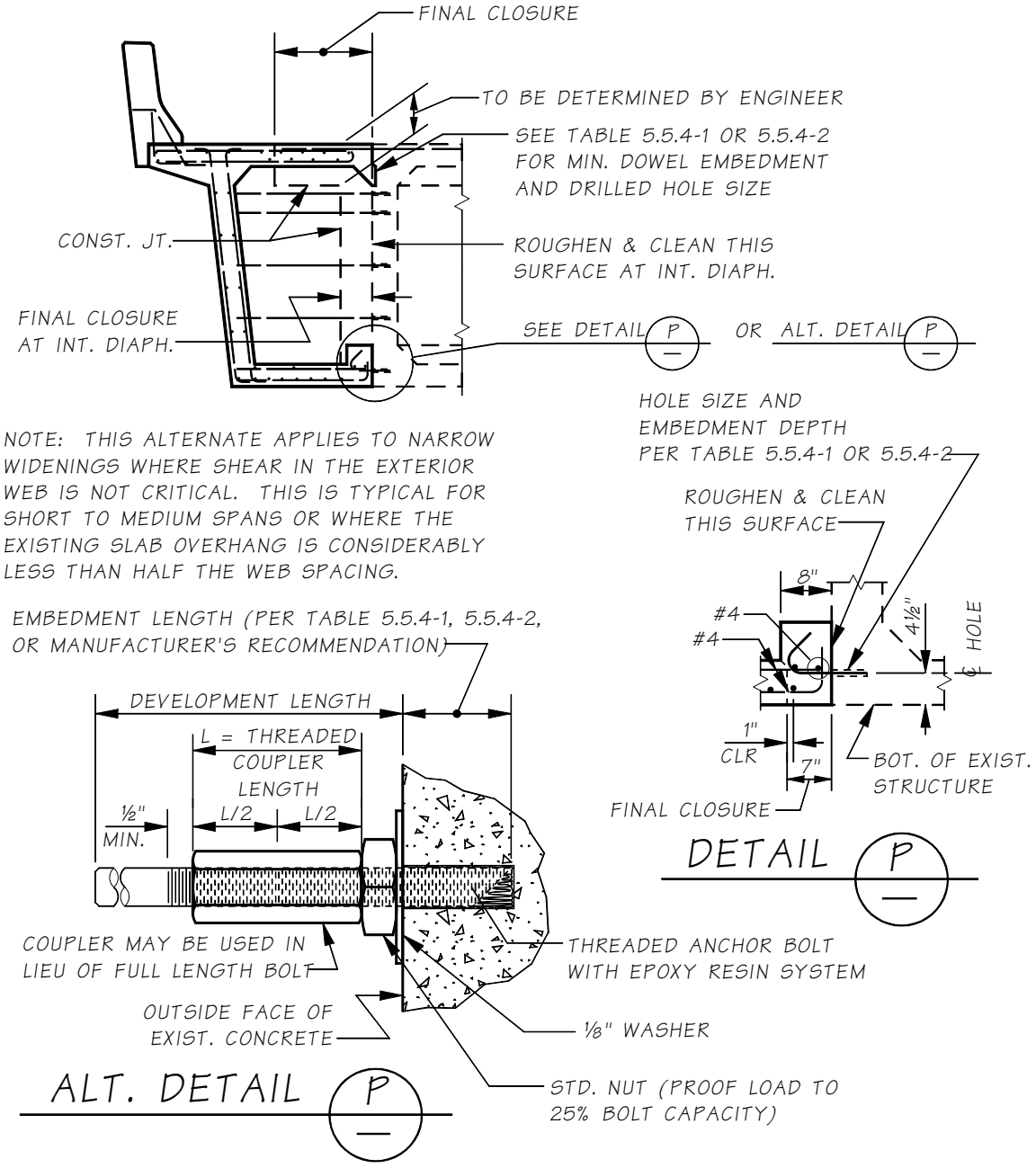

5.5.4.B.2 *Flat Slab Bridges*

It is not necessary to remove any portion of the existing slab to expose the existing transverse reinforcing bars for splicing purposes, because the transverse slab reinforcement is only distribution reinforcement. The transverse slab reinforcement for the widening may be dowelled directly into the existing structure without meeting the normal splice requirements.

For the moment connection details, see Figure 5.5.4-7.

Note: Falsework shall be maintained under pier crossbeams until closure pour is made and cured for 10 days.

Figure 5.5.4-7 Flat Slab–Section Through Crossbeam

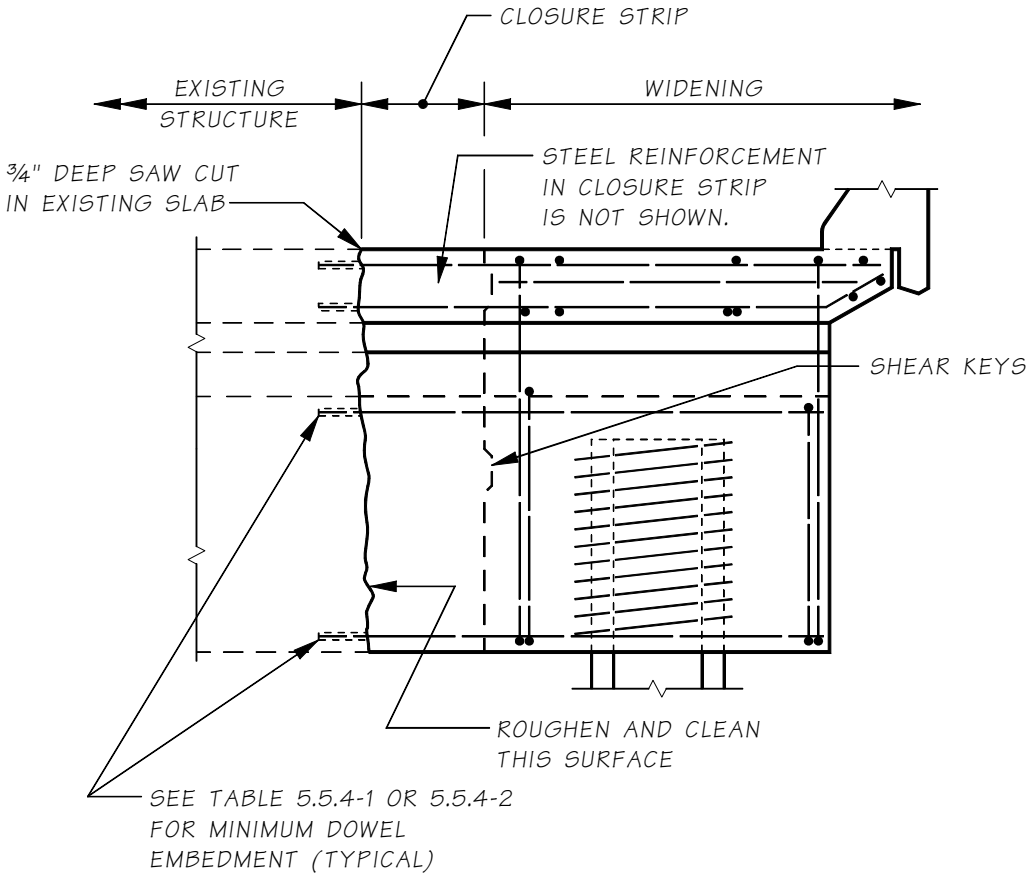

NOTE: FALSEWORK SHALL BE MAINTAINED UNDER PIER CROSSBEAMS UNTIL CLOSURE POUR IS MADE AND CURED 10 DAYS.

5.5.4.B.3 *T-Beam Bridges*

Use details similar to those for box girder bridges for crossbeam connections. See Figure 5.5.4-8 for slab connection detail.

Figure 5.5.4-8 T-Beam–Section in Span

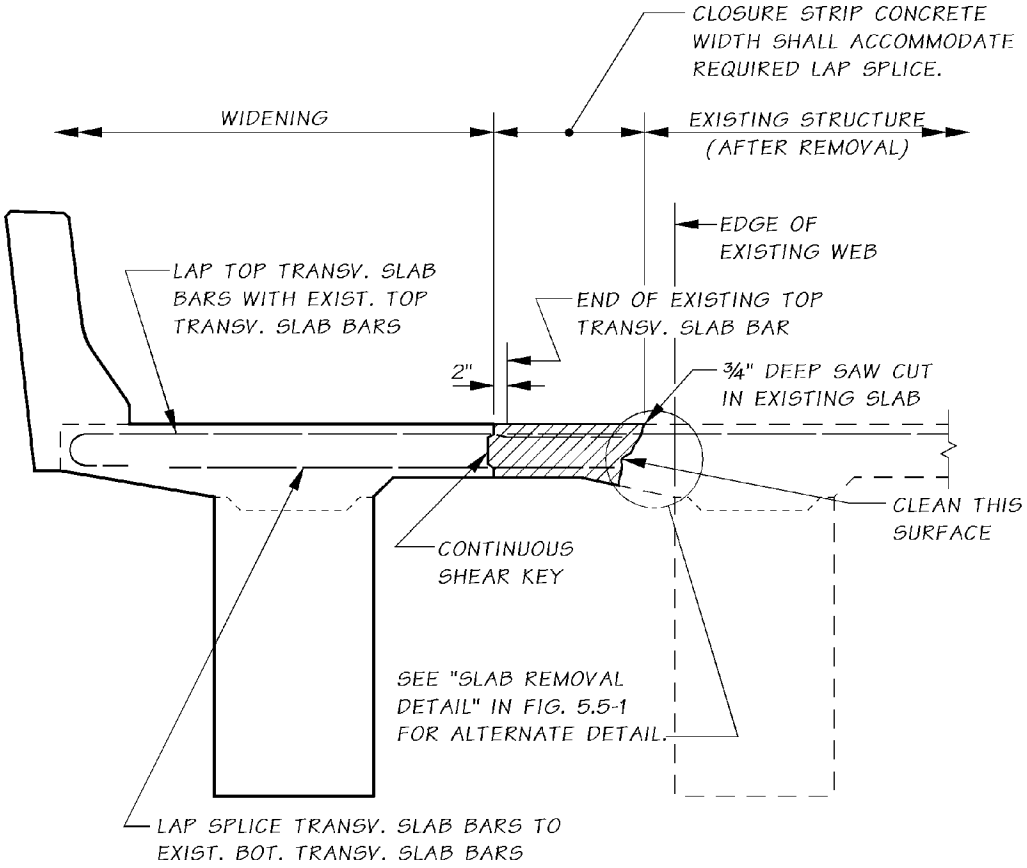

5.5.4.B.4 *Prestressed Concrete Girder Bridges*

Use details similar to those for box girder bridges for crossbeam moment connections and use details similar to those in Figure 5.5.4-9 for the slab connection detail.

Figure 5.5.4-9 Prestressed Concrete Girder–Section in Span

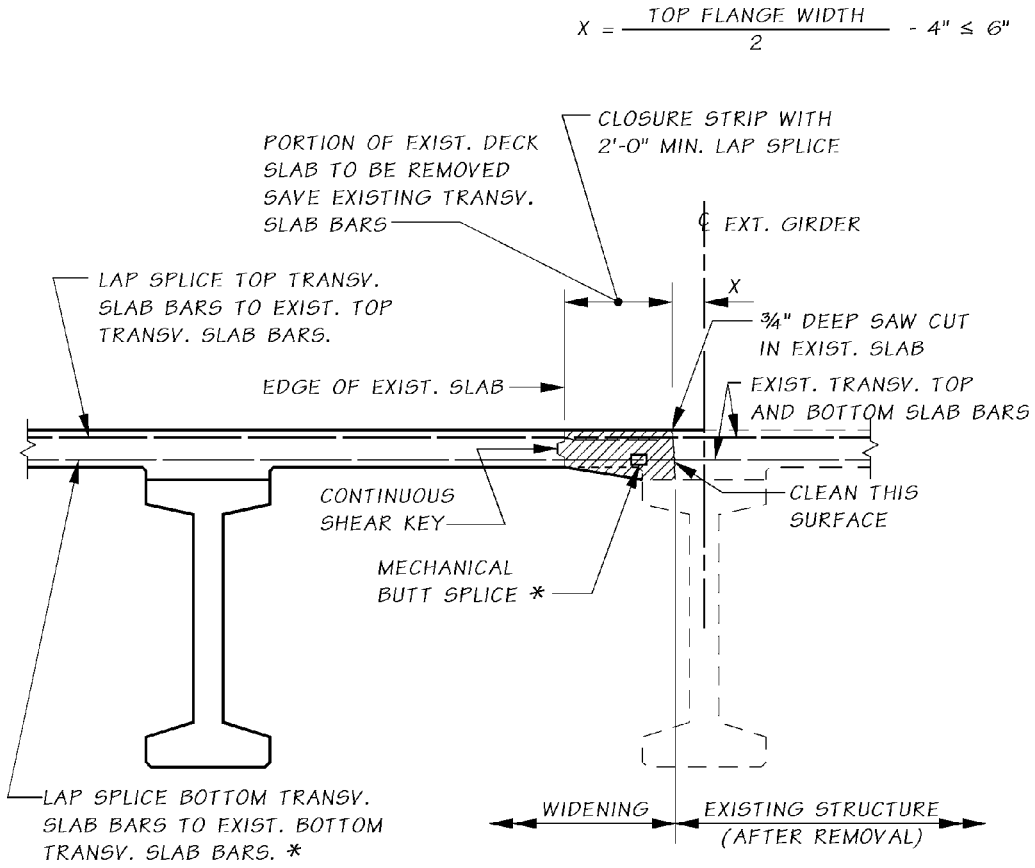

5.5.5 Expansion Joints

The designer should determine if existing expansion joints can be eliminated. It will be necessary to determine what modifications to the structure are required to provide an adequate functional system when existing joints are eliminated.

For expansion joint design, see Section 9.1 Expansion Joints. Very often on widening projects it is necessary to chip out the existing concrete deck and rebuild the joint. Figures 5.5.5-1 and 5.5.5-2 show details for rebuilding joint openings for compression seal expansion joints.

If a widening project includes an overlay, the expansion joint may have to be raised, modified or replaced. See the Joint Specialist for plan details that are currently being used to modify or retrofit existing expansion joints.

Figure 5.5.5-1 Expansion Joint Detail Shown for Compression Seal With Existing Reinforcing Steel Saved

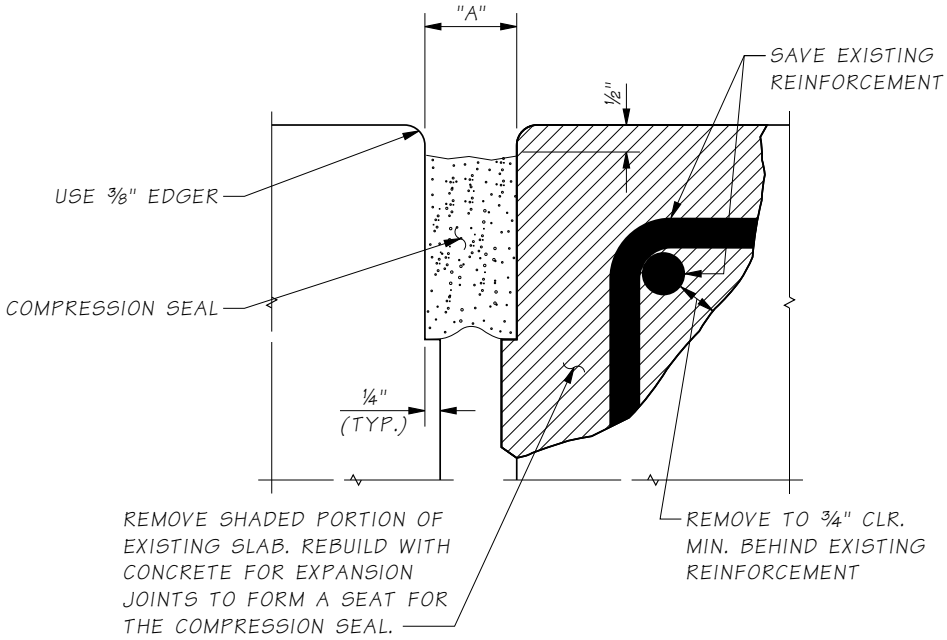

Figure 5.5.5-2 Expansion Joint Detail Shown for Compression Seal With New Reinforcing Steel Added

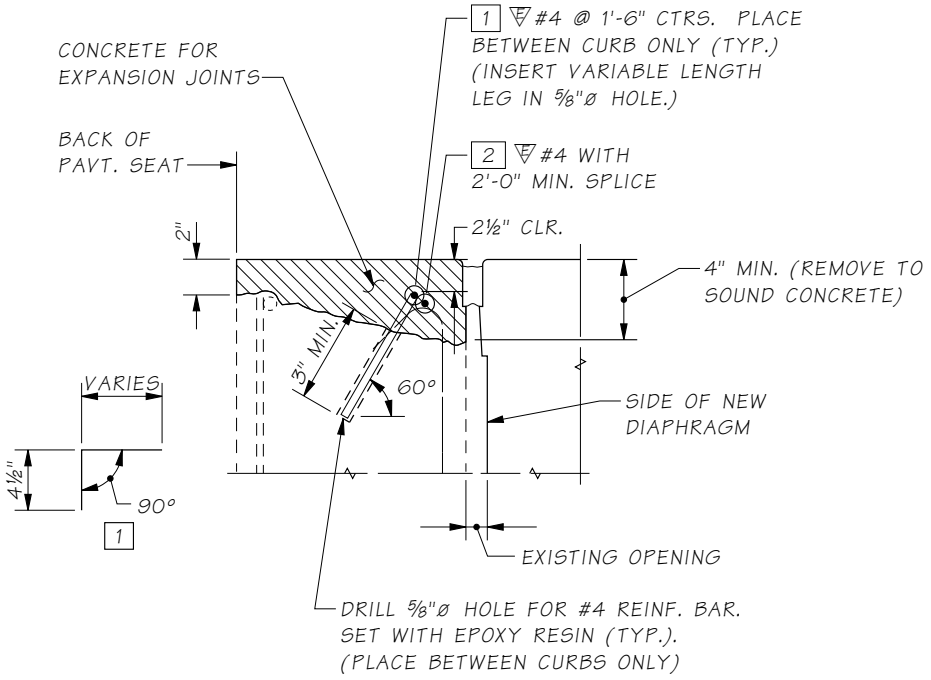

5.5.6 Possible Future Widening for Current Designs

For current projects that include sidewalks, provide a smooth rather than a roughened construction joint between the sidewalk and the slab.

5.5.7 Bridge Widening Falsework

For widenings which do not have additional girders, columns, crossbeams, or closure pours, falsework should be supported by the existing bridge. There should be no external support from the ground. The reason is that the ground support will not allow the widening to deflect the existing bridge when traffic is on the bridge. This will cause the "green" concrete to crack where it joins the existing bridge. The designer should contact the Bridge Construction Support Unit regarding falsework associated with widenings.

5.6 Prestressed Concrete Girder Superstructures

The prestressed concrete girder bridge is an economical and rapid type of bridge construction and often preferred for WSDOT bridges.

Precast sections are generally fabricated in plant or somewhere near the construction site and then erected. Precasting permits better material quality control and is often more economical than CIP concrete.

5.6.1 WSDOT Standard Prestressed Concrete Girder Types

A girder type consists of a series of girder cross sections sharing a common shape. The numbers within girder series generally refer to the depth of the section in inches. Refer to *Standard Specifications* Section 6-02.3(25) for a comprehensive list of Standard WSDOT girder types. Standard WSDOT girder types include:

Prestressed Concrete I Girders – Washington State Standard I Girders were adopted in the mid-1950s. The original series was graduated in 10 foot increments from 30 feet to 100 feet. In 1990, revisions were made incorporating the results of the research done at Washington State University on girders without end blocks. The revisions included three major changes: a thicker web; end blocks were eliminated; and strand spacing was increased. The current Series of this type include W42G, W50G, W58G, and W74G.

Prestressed Concrete Wide Flange (WF) I Girders and Spliced Prestressed Concrete Girders – In 1999, deeper girders, commonly called "Supergirders" were added to the WSDOT standard concrete girders. These new supergirders may be pre-tensioned or post-tensioned. The pre-tensioned Series are designated as WF74G, WF83G and WF95G and the post-tensioned (spliced) Series are designated as WF74PTG, WF83PTG and WF95PTG.

In 2004 Series WF42G, WF50G, and WF58G were added to the prestressed concrete girder standards. In 2008, Series WF66G, WF100G, and WF100PTG were added to the prestressed concrete girder standards. In 2009, Series WF36G was added to the prestressed concrete girder standards.

Prestressed Concrete Wide Flange Deck Girders – In 2015, the top flanges of Wide Flange I Girders were widened and thickened to support traffic loads without a CIP concrete deck. The top flanges are either spliced using ultra high performance concrete or mechanically connected at the flange edges to adjacent girders. This Series includes the WF39DG through the WF103DG.

Prestressed Concrete Wide Flange Thin Deck Girders – In 2015, the top flanges of wide flange I girders were widened to create a girder which would support a CIP concrete deck placement without formwork. This Series includes the WF36TDG through the WF100TDG.

Deck Bulb Tee Girders – This type of girder has a top flange designed to support traffic loads and are mechanically connected at the flange edges to adjacent girders. They include Series W35DG, W41DG, W53DG and W65DG.

Prestressed Concrete Slab Girders – Prestressed concrete slab girders are available in heights ranging from 12 inches to 30 inches. 36 inch deep sections may be available but may not be as economical as similar single-web members. Designers should check availability with fabricators.

Prestressed Concrete Tub Girders – In 2004 prestressed concrete tub girders were added as standard girders.

All WSDOT prestressed concrete girders are high performance high strength concrete girders. They generally rely on high strength concrete to be effective for the spans expected as a single piece. The approximate ranges of maximum span lengths are as shown in Table 5.6.1-1 and Appendices 5.6-A1-1 to 5.6-A1-9.

Standard drawings for WSDOT prestressed concrete girders are shown in the Bridge Standard Drawings website (www.wsdot.wa.gov/Bridge/Structures/StandardDrawings.htm).

Table 5.6.1-1 Section Properties of WSDOT Standard Prestressed Concrete Girders

Type	Depth (in)	Area (in^2)	Y_b (in)	I_x (in4)	I_y (in^4)	J (in^4)	Wt. (k/ft)	Volume-to-Surface Ratio (in)	Max. Span Capability (ft)
W42G	42	373.25	18.94	76092	5408	4670	0.428	2.77	85
W50G	50	525.5	22.81	164958	13363	8509	0.602	3.12	110
W58G	58	603.5	28.00	264609	17065	9499	0.692	3.11	120
W74G	73.5	746.7	38.08	546110	34759	10489	0.856	2.90	150
WF36G	36	690.8	17.54	124772	71291	13997	0.792	3.24	110
WF42G	42	727.5	20.36	183642	71406	14428	0.834	3.23	125
WF50G	50	776.5	24.15	282559	71559	15004	0.890	3.22	135
WF58G	58	825.5	27.97	406266	71712	15580	0.946	3.21	150
WF66G	66	874.5	31.80	556339	71865	16155	1.002	3.20	165
WF74G	74	923.5	35.66	734356	72018	16731	1.058	3.19	175
WF83G	82.625	976.4	39.83	959393	72184	17352	1.119	3.19	180
WF95G	94.5	1049.1	45.60	1328995	72411	18207	1.202	3.18	195
WF100G	100	1082.8	48.27	1524912	72516	18602	1.241 {1.015}	3.17	205 (203*) {210}
WF100G with 5'-1" Top Flange	100	1118.8	49.89	1612834	99849	18714	{1.049}	3.06	{230}
12″ x 4' Solid Slab	12	564	6.0	6768	-	-	0.646	4.78	30
18″ x 4' Voided Slab	18	655	9.0	21876	-	-	0.751	3.05	45
24" x 4' Voided Slab	24	741	12.0	48179	-	-	0.849	3.08	60
26″ x 4' Voided Slab	26	835	13.0	62874	-	-	0.957	3.41	65
30″ x 4'-4" Voided Slab	30	1021	15.0	104444	-	-	1.170	3.71	75
U54G4	54	1038.8	20.97	292423	493926	19520	1.190	3.51	125
U54G5	54	1110.8	19.81	314382	788289	20390	1.273	3.47	130
U66G4	66	1208.5	26.45	516677	637751	22285	1.385	3.51	145
U66G5	66	1280.5	25.13	554262	997354	23153	1.467	3.47	145
U78G4	78	1378.2	32.06	827453	798969	24971	1.579	3.51	155
U78G5	78	1450.2	30.62	885451	1227303	25808	1.662	3.48	165 (152*)
UF60G4	60	1207.7	26.03	483298	639795	22376	1.384	3.48	145
UF60G5	60	1279.7	24.74	519561	999184	23246	1.466	3.45	145
UF72G4	72	1377.4	31.69	787605	800958	25127	1.578	3.48	155
UF72G5	72	1449.4	30.26	844135	1229061	26008	1.661	3.45	160 (152*)

Weight and span capability are based on normal weight concrete with a unit weight of 165 pcf, except as noted. Values in {} are based on lightweight concrete with a unit weight of 135 pcf.

* The span capability figure represents the length at which the section weighs 262 kips.

5.6.2 Design Criteria

WSDOT design criteria for prestressed concrete girder superstructures are given in Table 5.6.2-1.

AASHTO LRFD Section 5.12.3.3 "Bridges Composed of Simple Span Precast Girders Made Continuous" allows for some degree of continuity for loads applied on the bridge after the continuity diaphragms have been cast and cured. This assumption is based on the age of the girder when continuity is established, and degree of continuity at various limit states. Both degree of continuity and time of continuity diaphragm casting may result in contractual and design issues. Designing these types of bridges for the envelope of simple span and continuous spans for applicable permanent and transient loads is the approach used by WSDOT as it has yielded good results.

Table 5.6.2-1 Design Criteria for Prestressed Concrete Girders

Design Specifications	AASHTO *LRFD Specifications* and WSDOT *Bridge Design Manual* M 23-50
Design Method	Prestressed concrete members shall be designed for service limit state for stress limits and checked for strength limit state for ultimate capacity.
Superstructure Continuity	Prestressed concrete girder superstructures shall be designed for the envelope of simple span and continuous span loadings for all permanent and transient loads. Loads applied before establishing continuity (typically before placement of continuity diaphragms) need only be applied as a simple span loading. Continuity reinforcement shall be provided at supports for loads applied after establishing continuity.
Loads and Load Factors	Service, Strength, Fatigue, and Extreme Event Limit State loads and load combinations shall be in accordance with AASHTO *LRFD Specifications*
Stress Limits	Table 5.2.1-1
Prestress Losses	Section 5.1.4
Shear Design	AASHTO LRFD Section 5.7 and Section 5.2.2.B
Shipping and Handling	Section 5.6.3
Continuous Structure Configuration	Girder type, depth and number of lines shall be identical in adjacent spans. Girder type, depth and number of lines may be changed at expansion piers.
Girder End Skew Angle	Girder end skew angles for prestressed concrete slabs, deck bulb-tees, WFDG girders, WFTDG girders and tubs shall be limited to 30°. Girder end skew angles for all other prestressed concrete girders shall be limited to 45°.
Intermediate Diaphragms	Except for Prestressed Concrete Wide Flange Deck Girder and Prestressed Concrete Slab Girder bridges, CIP concrete intermediate diaphragms shall be provided for prestressed concrete girder bridge spans in the following situations: • Spans crossing a roadway with a minimum vertical clearance of 20'-0" or less. • Spans crossing a railway with a minimum vertical clearance of 23'-4" or less from the top of rail. • Spans crossing a water body or waterway with a minimum vertical clearance of 6'-0" of less from the 100-year MRI water surface level. • Spans that will possibly or likely have vehicular traffic under the span in the future with a minimum vertical clearance of 20'-0" or less. Intermediate diaphragms shall be equally spaced between bearing centerlines at a spacing not to exceed 50'. Intermediate diaphragms shall be either partial or full depth as described in Section 5.6.4.C.4.

5.6.2.A Support Conditions

The prestressed concrete girders are assumed to be supported on rigid permanent simple supports. These supports can be either bearing seats or elastomeric pads. The design span length is the distance center to center of bearings for simple spans. For continuous spans erected on falsework (raised crossbeam), the effective point of support for girder design is assumed to be the face of the crossbeam. For continuous spans on crossbeams (dropped or semi-dropped crossbeam), the design span length is usually the distance center to center of temporary bearings.

5.6.2.B Composite Action

5.6.2.B.1 *General*

The sequence of construction and loading is extremely important in the design of prestressed concrete girders. The composite section has a much larger capacity than the basic girder section but it cannot take loads until the deck slab has obtained adequate strength. Assumptions used in computing composite section properties are shown in Figure 5.6.2-1.

5.6.2.B.2 *Load Application*

The following sequence and method of applying loads is typically used in girder analysis:

1. Girder dead load is applied to the girder section.
2. Diaphragm dead load is applied to the girder section.
3. Deck slab dead load is applied to the girder section.
4. Superimposed dead loads (such as barriers, sidewalks and overlays) and live loads are applied to the composite section.

5.6.2.B.3 *Composite Section Properties*

A CIP concrete bridge deck forms the top flange of the composite girder in prestressed concrete girder bridge construction.

1. **Effective and Transformed Flange Width**

   The effective flange width of a concrete bridge deck for computing composite section properties shall be in accordance with AASHTO LRFD Section 4.6.2.6. The effective flange width shall be reduced by the ratio E_{slab}/E_{girder} to obtain the transformed flange width. The effective modulus of the composite section with the transformed flange width is then E_{girder}.

2. **Effective Flange Thickness**

   The effective flange thickness of a concrete bridge deck for computing composite section properties shall be the deck thickness reduced by ½″ to account for wearing. Where a bridge will have an overlay applied prior to traffic being allowed on the bridge, the full deck thickness may be used as effective flange thickness.

5.6.2.B.4 *Slenderness Ratio*

The lateral slenderness ratio of WF girders l/r, where l is the girder length and r is the radius of gyration about the weak axis, shall not exceed 310. WF100G girders reach this limit at a length of 210 ft. The top flange width of WF100G girders can be increased to 5'-1" for spans greater than 210 ft.

Figure 5.6.2-1 Typical Section for Computation of Composite Section Properties

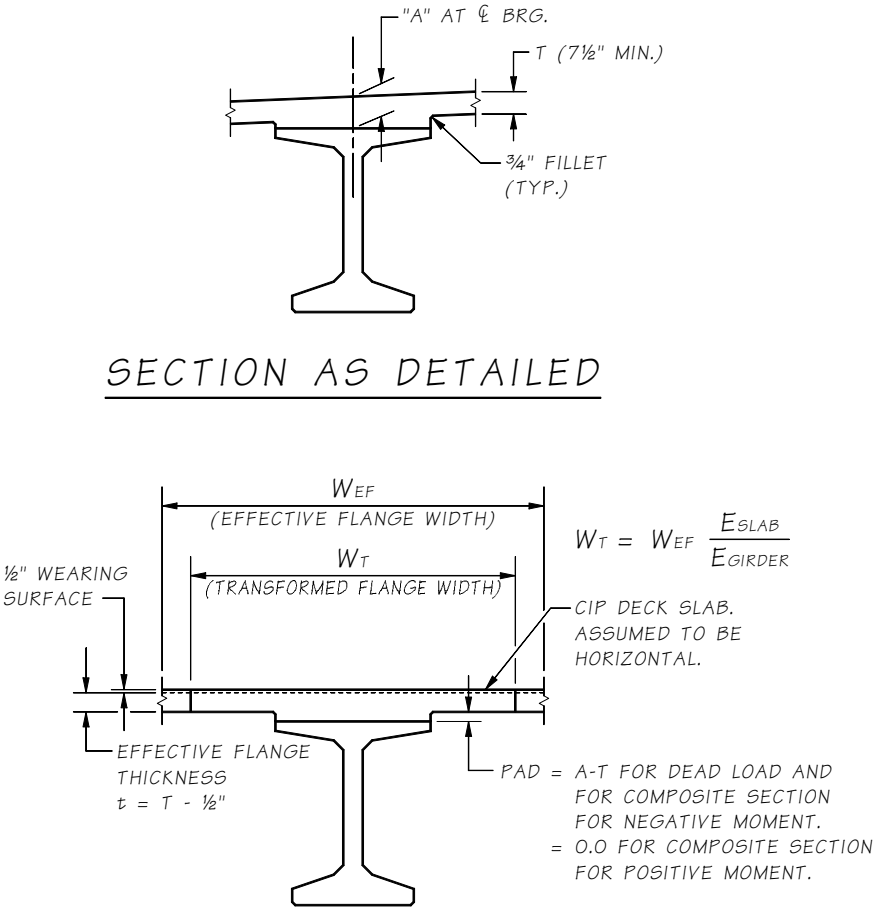

1. **Flange Position**

   An increased dimension from top of girder to top of bridge deck at centerline of bearing at centerline of girder shall be shown in the Plans. This is called the "A" dimension. It accounts for the effects of girder camber, vertical curve, deck cross slope, etc.

   For purposes of calculating composite section properties for negative moments, the pad/haunch height between bottom of deck and top of girder shall be taken as the "A" dimension minus the flange thickness "T" at intermediate pier supports and shall be reduced by girder camber as appropriate at other locations.

   For purposes of calculating composite section properties for positive moments, the bottom of the bridge deck shall be assumed to be directly on the top of the girder. This assumption may prove to be true at center of span where excess girder camber occurs.

2. **Section Dead Load**

   The bridge deck dead load to be applied to the girder shall be based on the full bridge deck thickness. The full effective pad/haunch weight shall be added to that load over the full length of the girder. The full effective pad or haunch height is typically the "A" dimension minus the flange thickness "T", but may be higher at midspan for a crest vertical curve.

5.6.2.C Design Procedure

5.6.2.C.1 *General*

The WSDOT Prestressed concrete girder design computer program PGSuper is the preferred method for design.

5.6.2.C.2 *Stress Conditions*

The stress limits as described in Table 5.2.1-1 shall not be exceeded for prestressed concrete girders at all stages of construction and in service. The stages of construction for which stress limits shall be checked shall include, but not be limited to the following:

1. Prestressing release at casting yard using Service I Limit State
2. Lifting at casting yard using Service I Limit State. Dead load impact need not be considered during lifting. This check shall be done in accordance with Section 5.6.3.C.2.
3. Shipping for a girder with impact using Service I Limit State. A dead load impact of 20 percent shall be included acting both up and down. The angle of inclination shall be the equilibrium tilt angle computed for lateral stability with a roadway superelevation of 2 percent. This check shall be done in accordance with Section 5.6.3.D.6. This condition represents the girder traveling along a straight road at a typical 2% superelevation with dynamic load effects.
4. Shipping for a girder without impact using Service I Limit State. Dead load impact, wind and centrifugal forces need not be included. The angle of inclination shall be the equilibrium tilt angle computed for lateral stability with a roadway superelevation of 6 percent. This check shall be done in accordance with Section 5.6.3.D.6. This condition represents the girder going slowly through a corner with a 6 percent superelevation.
5. Deck and diaphragm placement using Service I Limit State
6. Final condition without live load using Service I Limit State
7. Final condition with live load using Service I Limit State for compressive stresses and Service III Limit State for tensile stresses
8. Final condition with live load using Fatigue I Limit State

When dead load impact is included in construction checks, the deflection and sweep induced by the dynamic component need not be considered when performing stress and stability checks.

5.6.2.D Standard Strand Locations

Standard strand locations of typical prestressed concrete girders are shown in Figure 5.6.2-2 the Bridge Standard Drawings website (www.wsdot.wa.gov/Bridge/Structures/StandardDrawings.htm).

Figure 5.6.2-2 Typical Prestressed Concrete Girder Configuration

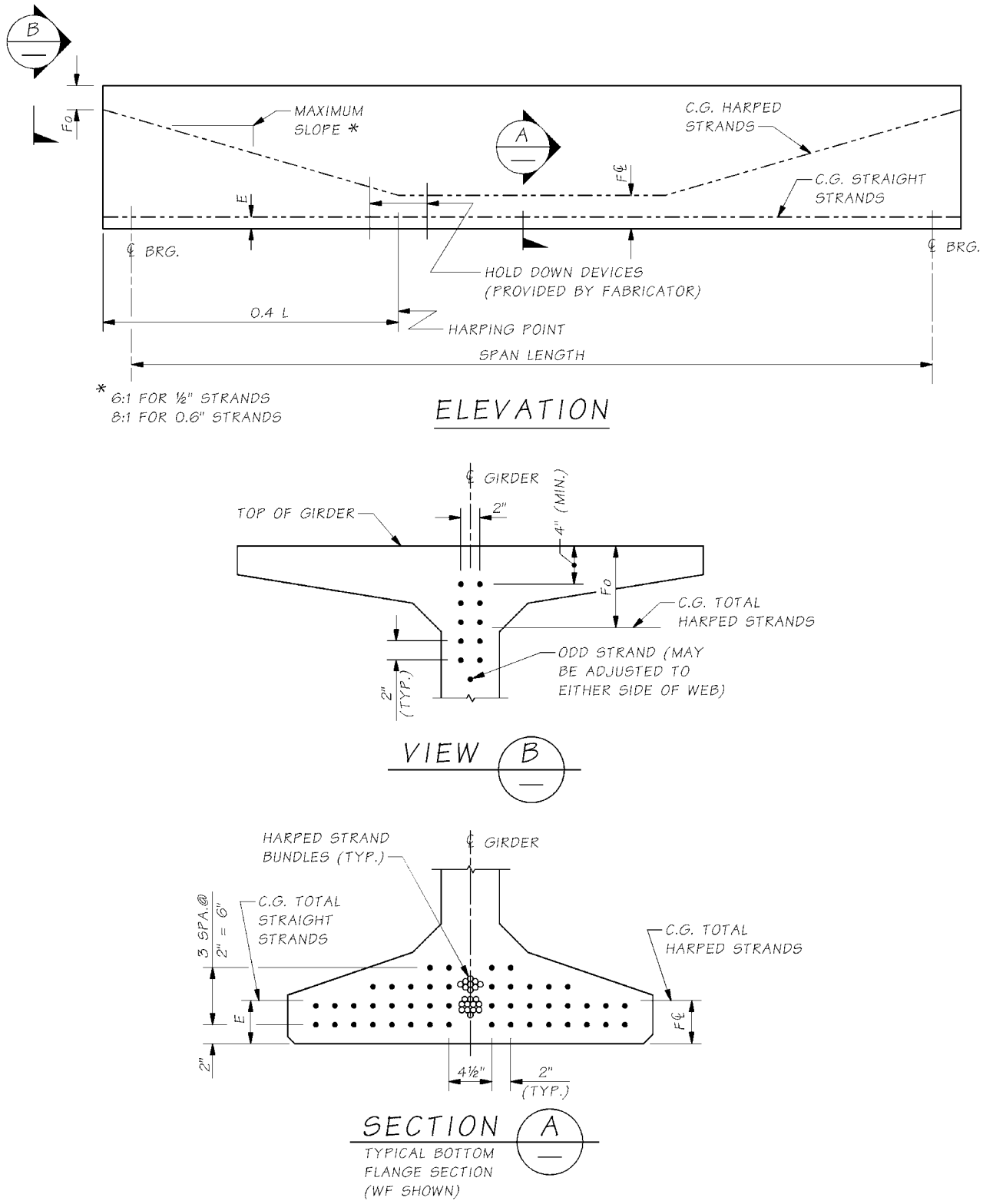

5.6.2.E Girder End Types

There are four typical end types for prestressed concrete girders. Due to the extreme depth of the WF83G, WF95G, and WF100G girders, and possible end of girder tilt at the piers for profile grades, the designer will need to pay particular attention to details to assure the girders will fit and perform as intended.

The end types designs may require modification for bridge security. The space between girders at the abutment may require omission by extending the diaphragm to the face of the abutment stem. Coordinate with the WSDOT State Bridge and Structures Architect during final design where required.

The four end types are shown as follows:

5.6.2.E.1 *End Type A*

End Type A as shown in Figure 5.6.2-3 is for cantilever end piers with an end diaphragm cast on the end of the girders. End Type A has a recess at the bottom of the girder near the end for an elastomeric bearing pad. See Bridge Standard Drawings 5.6-A4-12 and 5.6-A9-9 for bearing pad details. The recess at the centerline of bearing is 0.5″ deep. This recess is to be used for profile grades up to and including 4 percent. The recess is to be replaced by an embedded steel plate flush with the bottom of the girder for grades over 4 percent. A tapered bearing plate, with stops at the edges to contain the elastomeric pad, can be welded or bolted to the embedded plate to provide a level bearing surface.

Reinforcing bars and pre-tensioned strands project from the end of the girder. The designer shall assure that these bars and strands fit into the end diaphragm. Extended prestressing strands should be capable of developing seismic connection forces, but at least 4 strands should be extended. Embedment of the girder end into the end diaphragm shall be a minimum of 3″ and a maximum of 6″. For girder ends where the tilt would exceed 6″ of embedment, the girder ends shall be tilted to attain a plumb surface when the girder is erected to the profile grade.

The gap between the end diaphragm and the stem wall shall be a minimum of 1½″ or ½″ greater than required for longitudinal bridge movement.

Figure 5.6.2-3 End Type A (End Diaphragm on Girder)

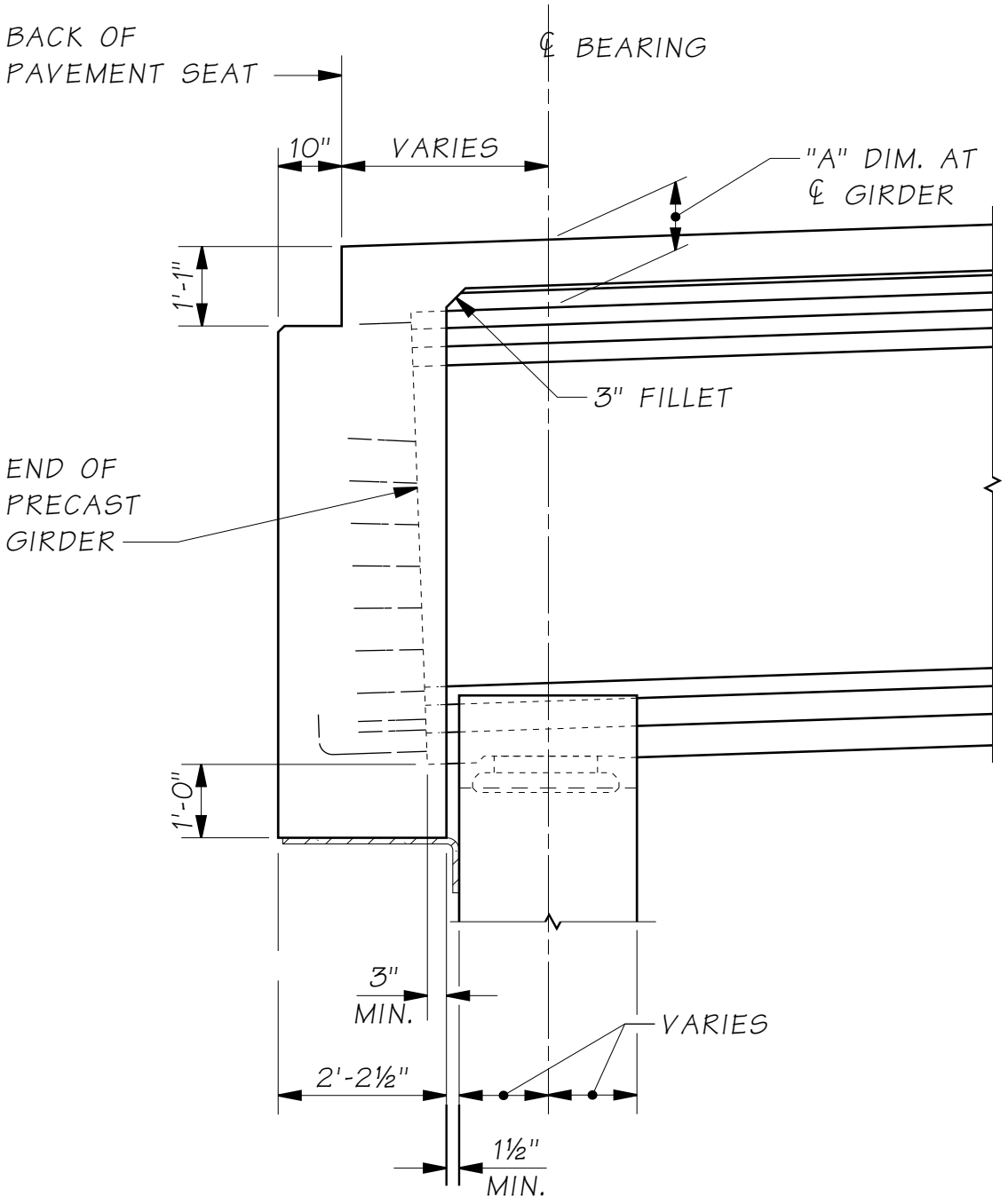

5.6.2.E.2 *End Type B*

End Type B as shown in Figure 5.6.2-4 is for "L" type abutments. End Type B also has a recess at the bottom of the girder for an elastomeric bearing pad. Notes regarding the bearing recess on End Type A also apply to End Type B. End Type B typically does not have reinforcing or strand projecting from the girder end.

The centerline of the diaphragm is normal to the roadway surface. The centerline of the bearing is coincident with the centerline of the diaphragm at the top of the elastomeric pad.

Figure 5.6.2-4 End Type B (L-Shape End Pier)

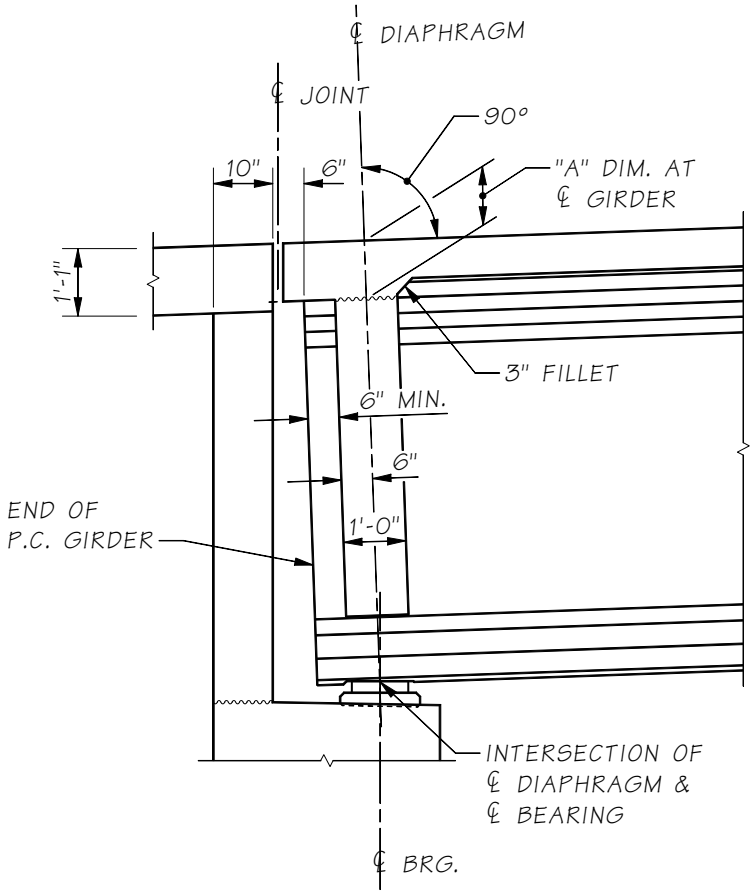

5.6.2.E.3 *End Type C*

End Type C as shown in Figure 5.6.2-5 is for continuous spans and an intermediate hinge diaphragm at an intermediate pier. There is no bearing recess and the girder is temporarily supported on oak blocks. This detail may be used to reduce the seismic demand at an intermediate pier by allowing rotation about the axis parallel to the crossbeam. The reduced pier stiffness will lower the plastic overstrength shear demand (V_{po}), allow for shorter columns and eliminate the plastic hinge at the top of each column. While the diaphragm hinge is intended to act as a pin, there may be some residual stiffness at the connection that shall be determined by the designer. This stiffness will move the point of inflection down the pier, inducing some plastic overstrength shear demand.

The hinge connection should be assumed pinned to determine the pier displacement and ductility demand for seismic analysis.

The designer shall check the edge distance and provide a dimension that prevents edge failure, or spalling, at the top corner of the supporting cross beam for load from the oak block including dead loads from girder, deck slab, and construction loads.

For prestressed concrete girders with intermediate hinge diaphragms, designers shall:

1. Check size and minimum embedment in crossbeam and diaphragm for hinge bars. Bars shall be sized based on interface shear due to calculated plastic overstrength shear force (V_{po}) from the column while ignoring the concrete cohesion and axial load contributions.
2. Design the width of the shear key to take the factored vertical bearing force per AASHTO LRFD Section 5.6.5 at the Strength limit state. The maximum shear key width shall be limited to 0.3d, where d is the width of the diaphragm.
3. Confinement reinforcement shall be added to the diaphragm between the girders over a vertical distance equal to or greater than the diaphragm width. Confinement shall be no less than #4 ties bars spaced at 12 inches longitudinally and staggered 6 inches vertically.
4. The throat of the hinge gap shall be no larger than 0.75 inches The bottom of diaphragm may taper up to 5 degrees maximum to allow for 1.5 times the elastic service, strength or extreme rotation. The material used to form the gap shall be strong enough to support the wet concrete condition and shall be removed after concrete placement.
5. Check interface shear friction at girder end (see Section 5.2.2.C.2).

Design of the pier in the transverse direction (parallel to the crossbeam axis) shall be performed per the AASHTO Seismic Guide Specifications.

Figure 5.6.2-5 End Type C (Intermediate Hinge Diaphragm)

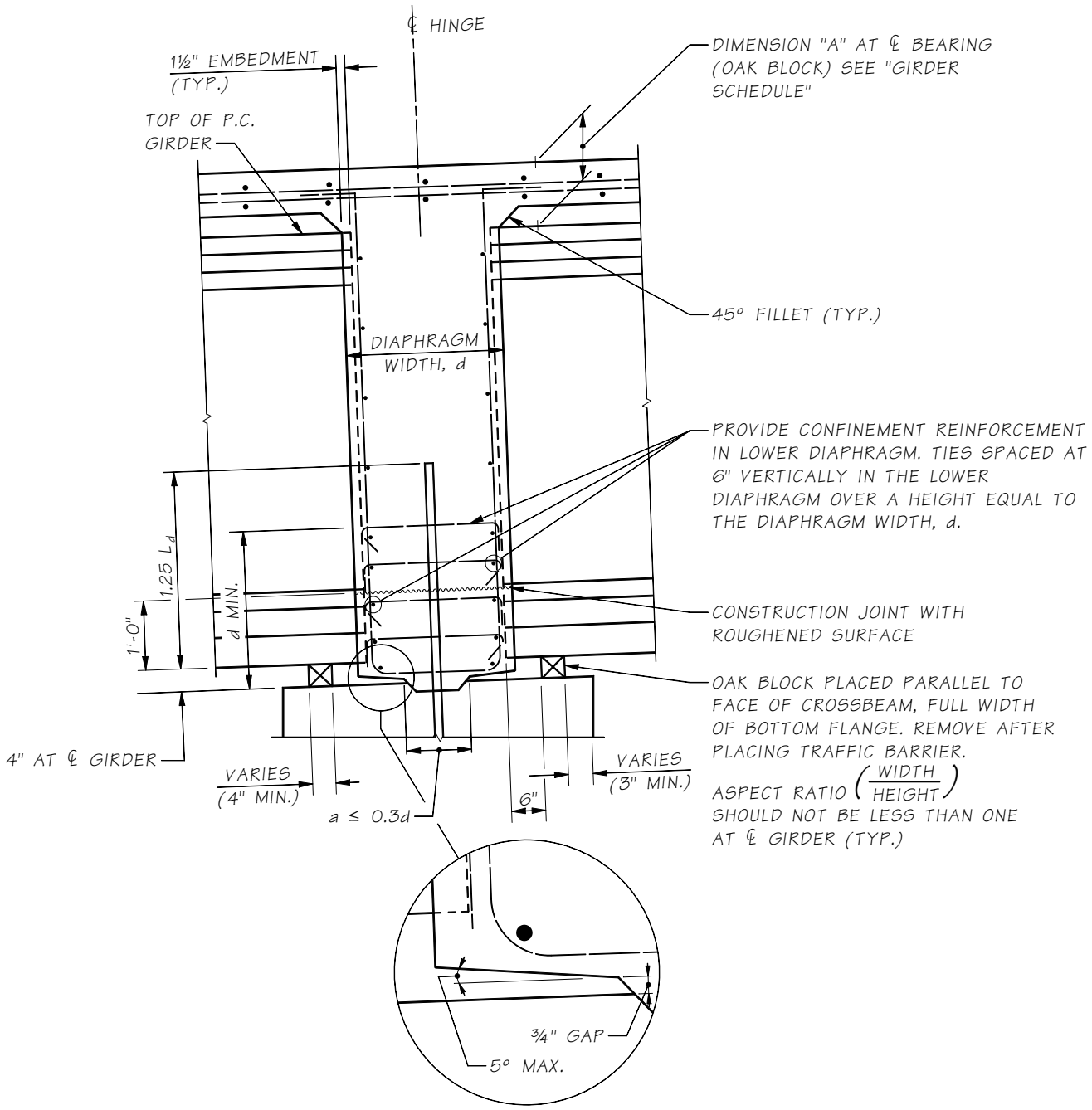

5.6.2.E.4 *End Type D*

End Type D as shown in Figure 5.6.2-6 is for continuous spans fully fixed to columns at intermediate piers. There is no bearing recess and the girder is temporarily supported on oak blocks.

The designer shall check the edge distance and provide a dimension that prevents edge failure, or spalling, at the top corner of the supporting cross beam for load from the oak block including dead loads from the girder and construction loads. The designer shall check interface shear friction at the girder end (see Section 5.2.2.C.2).

Figure 5.6.2-6 End Type D

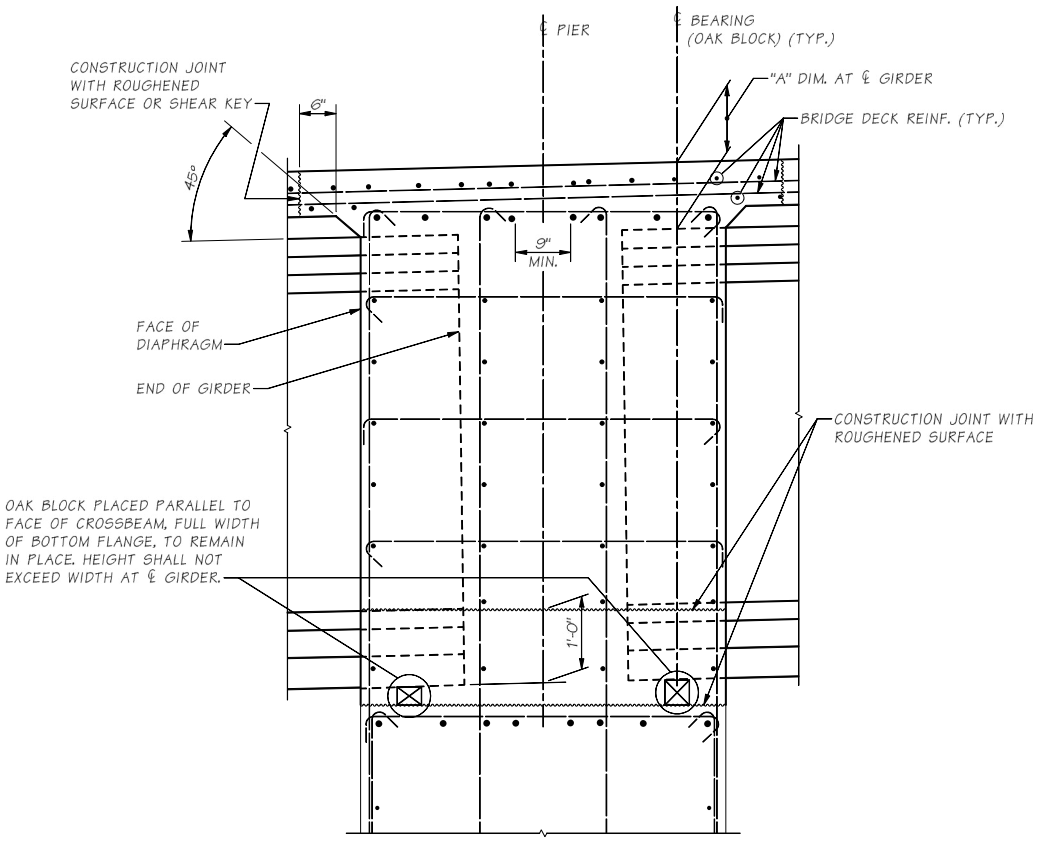

5.6.2.F Splitting Resistance in End Regions of Prestressed Concrete Girders

The splitting resistance of pre-tensioned anchorage zones shall be as described in AASHTO LRFD Section 5.9.4.4.1. For pre-tensioned I-girders or bulb tees, the end vertical reinforcement shall not be larger than #5 bars and spacing shall not be less than 2½″. For pre-tensioned tub girders, the end vertical reinforcement shall not be larger than #5 bars and spacing shall not be less than 3″. Any remaining splitting reinforcement not fitting within the h/4 zone may be placed beyond the h/4 zone at the minimum spacing allowed.

5.6.2.G Confinement Reinforcement in End Regions of Prestressed Concrete Girders

Confinement reinforcement in accordance with AASHTO LRFD Section 5.9.4.4.2 shall be provided.

5.6.2.H Girder Stirrups

Except as otherwise permitted, for girders with CIP deck slabs, girder stirrups shall be field bent over the top mat of reinforcement in the bridge deck.

Stirrups for slab and wide flange thin deck girders which shall be bent at the heigh shown in the standard girder plans.

I-girder stirrups may be prebent, but the extended hook shall be within the core of the slab (the inside edge of the hook shall terminate above the bottom mat deck slab bars). For I-girders with a 7½” minimum thickness cast-in-place bridge deck, girder stirrups no larger than #5 bars, and with or without permanent precast prestressed concrete stay-in-place deck panels, prebent stirrups may be used with “hat bar” stirrup extensions. Details shall conform to Figure 5.6.2-7 and the following requirements (see reference 27):

- Girder stirrups shall all extend at least 5” from the top of the girder, but typically no more than the deck thickness minus 2.5”.
- Hat bars shall be epoxy coated and shall be the same bar size as the girder stirrups

5.6.2.I Section Properties

Gross section properties (including the gross deck area transformed by the girder/deck modular ratio if applicable) shall be used for design of precast concrete girders including prestress losses, camber, and flexural capacity. Transformed sections (transforming reinforcement to an equivalent concrete area) may be used in special cases with the approval of the WSDOT Bridge Design Engineer.

Figure 5.6.2-7 Hat Bar Plan Details

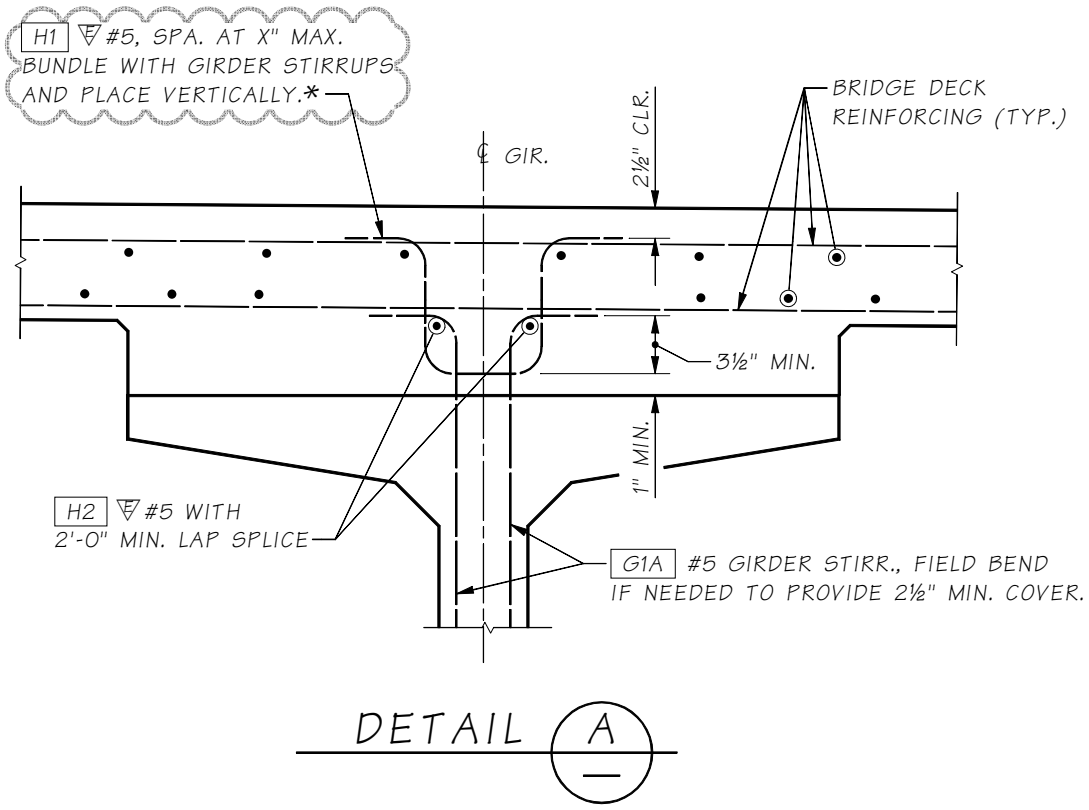

* H1 #5 MAY BE OMITTED AT LOCTIONS WHERE GIRDER STIRRUPS PROJECT AT LEAST 3" ABOVE THE BOTTOM OF THE TRANSVERSE BAR IN THE BOTTOM MAT OF THE BRIDGE DECK.

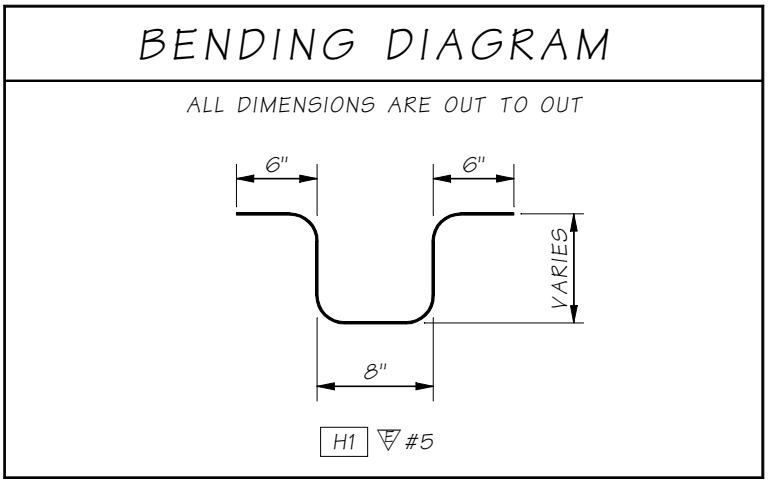

5.6.3 Fabrication and Handling

5.6.3.A Shop Plans

Fabricators of prestressed concrete girders are required to submit shop plans which show specific details for each girder. These shop plans are reviewed for conformance with the Contract Plans and specifications.

5.6.3.B Special Problems for Fabricators

5.6.3.B.1 *Strand Tensioning*

The method selected for strand tensioning may affect the design of the girders. The strand arrangements shown in the office standard plans and included in the PGSuper computer program are satisfactory for tensioning methods used by fabricators in this state. Harped strands are normally tensioned by pulling them as straight strands to a partial tension. The strands are then deflected vertically as necessary to give the required harping angle and strand stress. In order to avoid overtensioning the harped strands by this procedure, the slope of the strands is limited to a maximum of 6:1 for 0.5″ ϕ strands and 8:1 for 0.6″ϕ strands. The straight strands are tensioned by straight jacking.

5.6.3.B.2 *Hold Down Forces*

Forces on the hold-down units are developed as the harped strands are raised. The hold-down device provided by the fabricator must be able to hold the vertical component of the harping forces. Normally a two or more hold-down unit is required. Standard commercial hold-down units have been preapproved for use with particular strand groups.

5.6.3.B.3 *Numbers of Strands*

Since the prestressing beds used by the girder fabricators can carry several girders in a line, it is desirable that girders have the same number of strands where practical. This allows several girders to be set up and cast at one time.

For pre-tensioned concrete girders, the number of permanent prestressing strands (straight and harped) shall be limited to 100 total 0.6″ϕ strands.

5.6.3.C Handling of Prestressed Concrete Girders

5.6.3.C.1 *In-Plant Handling*

The maximum weight that can be handled by precasting plants in the Pacific Northwest is 262 kips. It is possible that products heavier than 262 kips can be manufactured if they will be shipped directly to the jobsite by barge, but special plant lifting arrangements must be investigated. Headroom is also not generally a concern for the deeper sections.

5.6.3.C.2 *Lateral Stability During Handling*

In order to ensure constructability, the designer shall specify the lifting embedment locations (centroid 3′ minimum from ends - see *Standard Specifications* Section 6-02.3(25) L), maximum midspan vertical deflection and the corresponding concrete strength at release that satisfies the stress limits from Section 5.2.1.C and provides an adequate factor of safety for lateral stability. The calculations shall conform to methods as described in *Standard Specifications* Section 6-02.3(25) and reference 26. Factors of safety of 1.0 against cracking and 1.5 against failure shall be used.

Biaxial stresses due to lateral bending at the girder tilt equilibrium condition shall consider the assumed lifting embedment transverse placement tolerance and the girder sweep tolerance. Stresses shall be evaluated for the girder tilt equilibrium condition for a hanging girder as described in *Standard Specifications* Section 6-02.3(25) and reference 26.

Lateral stability can be a concern when handling long, slender girders. Lateral bending failures are sudden, catastrophic, costly, pose a serious threat to workers and surroundings, and therefore shall be considered by designers. When the girder forms are stripped from the girder, the prestressing level is higher and the concrete strength is lower than at any other point in the life of the member. Lifting embedment/support misalignment, horizontal girder sweep and other girder imperfections can cause the girder to roll when handling, causing a component of the girder weight to be resisted by the weak axis.

Lateral stability may be improved using the following methods:

1. Move the lifting embedments away from the ends. This may increase the required concrete release strength, because decreasing the distance between lifting devices increases the concrete stresses at the harp point. Stresses at the support may also govern, depending on the exit location of the harped strands.
2. Select a girder section that is relatively wide and stiff about its vertical (weak) axis.
3. Add temporary prestressing in the top flange.
4. Brace the girder.
5. Raise the roll axis of the girder with a rigid yoke.

5.6.3.D Shipping Prestressed Concrete Girders

5.6.3.D.1 *General*

The ability to ship girders can be influenced by a large number of variables, including mode of transportation, weight, length, height, and lateral stability. The ability to ship girders is also strongly site-dependent. For large or heavy girders, routes to the site shall be investigated during the preliminary design phase. To this end, on projects using large or heavy girders, WSDOT can place an advisory in their special provisions including shipping routes, estimated permit fees, escort vehicle requirements, Washington State Patrol requirements, and permit approval time.

5.6.3.D.2 *Mode of Transportation*

Three modes of transportation are commonly used in the industry: truck, rail, and barge. In Washington State, an overwhelming percentage of girders are transported by truck, so discussion in subsequent sections will be confined to this mode. However, on specific projects, it may be appropriate to consider rail or barge transportation.

Standard rail cars can usually accommodate larger loads than a standard truck. Rail cars range in capacity from approximately 120 to 200 kips. However, unless the rail system runs directly from the precasting plant to the jobsite, members must be trucked for at least some of the route, and weight may be restricted by the trucking limitations.

For a project where a large number of girders are required, barge transportation may be the most economical. Product weights and dimensions are generally not limited by barge delivery, but by the handling equipment on either end. In most cases, if a product can be made and handled in the plant, it can be shipped by barge.

5.6.3.D.3 *Weight Limitations*

The net weight limitation with trucking equipment currently available in Washington State is approximately 180 kips, if a reasonable delivery rate (number of pieces per day) is to be maintained. Product weights of up to 262 kips can be hauled with currently available equipment at a limited rate. The hauling of heavier girders may be possible with coordination with hauling subcontractors. Hauling subcontractors should be consulted on the feasibility of shipping large or heavy girders on specific projects.

5.6.3.D.4 *Support Locations*

The designer shall provide shipping support locations in the plans to ensure adequate girder stability. Shipping support locations shall be no closer than the girder depth to the ends of the girder at the girder centerline. The overhangs at the leading and trailing ends of the girders should be minimized and equal if possible. Generally, the leading end overhang should not exceed 15′ to avoid interference with trucking equipment. Local carriers should be consulted if a larger leading end overhang is required. Shipping support locations shall maintain the concrete stresses within allowable limits.

Length between shipping support locations may be governed by turning radii on the route to the jobsite. Potential problems can be circumvented by moving the support points closer together (away from the ends of the girder), or by selecting alternate routes. Up to 130′ between supports is typically acceptable for most projects.

5.6.3.D.5 *Height Limitations*

The height of a deep girder section sitting on a jeep and steerable trailer is of concern when considering overhead obstructions on the route to the jobsite. The height of the support is approximately 6′ above the roadway surface. When adding the depth of the girder, including camber, the overall height from the roadway surface to the top of concrete can rapidly approach 14′. Overhead obstructions along the route should be investigated for adequate clearance in the preliminary design phase. Obstructions without adequate clearance must be bypassed by selecting alternate routes.

Expectations are that, in some cases, overhead clearance will not accommodate the vertical stirrup projection on deeper WSDOT standard girder sections. Alternate stirrup configurations can be used to attain adequate clearance, depending on the route from the plant to the jobsite.

5.6.3.D.6 *Lateral Stability During Shipping*

In order to ensure constructability, the designer shall specify concrete strengths, shipping support locations, minimum shipping support rotational spring constants, shipping support center-to-center wheel spacing, maximum midspan vertical deflection at shipping and temporary top strand configurations in the Plans that satisfy the stress limits from Section 5.2.1.C and provide adequate factors of safety for lateral stability during shipping. The calculations shall conform to methods described in *Standard Specifications* Section 6-02.3(25) and reference 26. Factors of safety of 1.0 against cracking and 1.5 against failure and rollover shall be used. The maximum midspan vertical deflection at shipping used to evaluate stability shall be shown in the plans. In order to minimize the need for re-analysis under contract, this value may be conservatively determined using losses at 10 days, camber at 90 days, and a span length equal to the girder length.

The rotational stiffness and center-to-center wheel spacing used in design shall be taken from Table 5.6.3-1. Design the girder for transportation with the least stiff support system as possible while achieving recommended factors of safety.

Table 5.6.3-1 Shipping Support Parameters

Shipping Support Rotational Spring Constant, K_θ (Kip-in/radian)	Shipping Support Center-to-Center Wheel Spacing, W_{cc}
40,000	72
50,000	72
60,000	72 or 96
70,000	96
80,000	96

Design for shipping should not preclude the contractor from making modifications under contract that consider actual conditions, such as fabrication tolerances and the haul route, but the Engineer should confirm that any proposed changes are structurally acceptable in the final in-service structure.

5.6.3.E Erection and Bridge Deck Construction

A variety of methods are used to erect prestressed concrete girders, depending on the weight, length, available crane capacity, and site access. Generally, lifting girders during erection is not as critical as when they are stripped from the forms, particularly when the same lifting devices are used for both. However, if appurtenances such as deck overhang formwork brackets are attached to the girder, the lifting slings are at an angle other than 90° ± 10° from the top surface of the girder, wind loads are present, the girder is erected in such a manner that one end is supported at the top by a lifting device while the other end is seated on a girder transport vehicle or bearing, or a separate set of erection devices are used, the girder shall be checked for stresses and lateral stability as part of the contractor's erection plan. In addition, once the girder is set in place, the free span between supports is usually increased. Wind can also pose a problem. Consequently, when girders are erected, they shall immediately be braced. The temporary bracing of the girders is the contractor's responsibility. For tub girders, designers should consider web out-of-plane bending forces that will develop during construction. Examples of these loads include forces developed by lift rigging and loading due to the deck finishing machine. These cases may require temporary struts and govern the design of web stirrups.

For long-span girders and other girders where the lifting loops are placed far from the girder ends to accommodate lifting at release, designers should consider specifying additional lifting loops closer to the girder ends that can be used during erection. When setting girders on bearings during erection, there can be end rotations of the girder that cause horizontal shear in bearings. The magnitude of this shear force or deformation should be considered. Placing lifting loops closer to girder ends minimizes the magnitude of girder end rotation.

5.6.3.F Construction Sequence for Multi-Span Prestressed Concrete Girder Bridges

For multi-span prestressed concrete girder bridges, the sequence and timing of the superstructure construction has a significant impact on the performance and durability of the bridge. In order to maximize the performance and durability, the "construction sequence" details shown on the Bridge Standard Drawings website (www.wsdot.wa.gov/Bridge/Structures/StandardDrawings.htm) shall be followed for all new WSDOT multi-span prestressed concrete girder bridges. Particular attention shall be paid to the timing of casting the lower portion of the pier diaphragms/crossbeams (30 days minimum after girder fabrication) and the upper portion of the diaphragms/crossbeams (10 days minimum after placement of the deck slab). The requirements apply to multi-span prestressed concrete girder bridges with monolithic and hinge diaphragms/crossbeams.

5.6.4 Superstructure Optimization

5.6.4.A Girder Selection

Cost of the girders is a major portion of the cost of prestressed concrete girder bridges. Much care is therefore warranted in the selection of girders and in optimizing their position within the structure. The following general guidelines should be considered.

5.6.4.A.1 *Girder Series Selection*

All girders in a bridge shall be of the same series unless approved otherwise by the Bridge and Structures Engineer. If vertical clearance is no problem, a larger girder series, utilizing fewer girder lines, may be a desirable solution.

Fewer girder lines may result in extra reinforcement and concrete but less forming cost. These items must also be considered.

5.6.4.A.2 *Girder Concrete Strength*

Higher girder concrete strengths should be specified where that strength can be effectively used to reduce the number of girder lines, see Section 5.1.1.A.2. When the bridge consists of a large number of spans, consideration should be given to using a more exact analysis than the usual design program in an attempt to reduce the number of girder lines. This analysis shall take into account actual live load, creep, and shrinkage stresses in the girders.

5.6.4.A.3 *Girder Spacing*

Consideration must be given to the deck slab cantilever length to determine the most economical girder spacing. This matter is discussed in Section 5.6.4.B. The deck slab cantilever length should be made a maximum if a line of girders can be saved. It is recommended that the overhang length, from edge of slab to center line of exterior girder, be less than 40 percent of girder spacing; then the exterior girder can use the same design as that of the interior girder. The following guidance is suggested.

1. **Tapered Spans**

   On tapered roadways, the minimum number of girder lines should be determined as if all girder spaces were to be equally flared. As many girders as possible, within the limitations of girder capacity should be placed. Deck slab thickness may have to be increased in some locations in order to accomplish this.

2. **Curved Spans**

   On curved roadways, normally all girders will be parallel to each other. It is critical that the exterior girders are positioned properly in this case, as described in Section 5.6.4.B.

3. **Geometrically Complex Spans**

   Spans which are combinations of taper and curves will require especially careful consideration in order to develop the most effective and economical girder arrangement. Where possible, girder lengths and numbers of straight and harped strands should be made the same for as many girders as possible in each span.

4. **Number of Girders in a Span**

   Usually all spans will have the same number of girders. Where aesthetics of the underside of the bridge is not a factor and where a girder can be saved in a short side span, consideration should be given to using unequal numbers of girders. It should be noted that this will complicate crossbeam design by introducing torsion effects and that additional reinforcement will be required in the crossbeam.

5.6.4.B Bridge Deck Cantilevers

The exterior girder location is established by setting the dimension from centerline of the exterior girder to the adjacent curb line. For straight bridges this dimension will normally be no less than 2′-6″ for W42G, W50G, and W58G; 3′-0″ for W74G; and 3′-6″ for WF74G, WF83G, WF95G and WF100G. Some considerations which affect this are noted below.

5.6.4.B.1 *Appearance*

Normally, for best appearance, the largest bridge deck overhang which is practical should be used.

5.6.4.B.2 *Economy*

Fortunately, the condition tending toward best appearance is also that which will normally give maximum economy. Larger curb distances may mean that a line of girders can be eliminated, especially when combined with higher girder concrete strengths.

5.6.4.B.3 *Bridge Deck Strength*

It must be noted that for larger overhangs, the bridge deck section between the exterior and the first interior girder may be critical and may require thickening.

5.6.4.B.4 *Drainage*

Where drainage for the bridge is required, water from bridge drains is normally piped across the top of the girder and dropped inside of the exterior girder line. A large bridge deck cantilever length may severely affect this arrangement and it must be considered when determining exterior girder location.

5.6.4.B.5 *Bridge Curvature*

When straight prestressed concrete girders are used to support curved roadways, the curb distance must vary. Normally, the maximum bridge deck overhang at the centerline of the long span will be made approximately equal to the overhang at the piers on the inside of the curve. At the point of minimum curb distance, however, the edge of the girder top flange should be no closer than 1′-0″ from the bridge deck edge. Where curvature is extreme, other types of bridges should be considered. Straight girder bridges on highly curved alignments have a poor appearance and also tend to become structurally less efficient.

5.6.4.C Diaphragm Requirements

5.6.4.C.1 *General*

Intermediate diaphragms provide girder stability for the bridge deck placement and improve the bridge resistance to over-height impact loads.

Diaphragms for prestressed concrete girder bridges shall be cast-in-place concrete. For large girder spacings or other unusual conditions, special diaphragm designs shall be performed.

Inserts may be used to accommodate the construction of intermediate diaphragms for connections between the diaphragm and the web of prestressed concrete girders. The designer shall investigate the adequacy of the insert and the connection to develop the tensile capacity of diaphragm reinforcement. The designer shall also investigate the interface shear capacity of the diaphragm-to-web connections for construction and deck placement loads.

Vertical reinforcement for intermediate diaphragms may be terminated at the top of top flange if SIP deck panels are used for the bridge deck.

5.6.4.C.2 *Design*

Diaphragms shall be designed as transverse beam elements carrying both dead load and live load.

5.6.4.C.3 *Geometry*

Diaphragms shall normally be oriented parallel to skew (as opposed to normal to girder centerlines). This procedure has the following advantages:

1. The build-up of higher stresses at the obtuse corners of a skewed span is minimized. This build-up has often been ignored in design.
2. Skewed diaphragms are connected at points of approximately equal girder deflections and thus tend to distribute load to the girders in a manner that more closely meets design assumptions.
3. The diaphragms have more capacity as tension ties and compression struts are continuous. Relatively weak inserts are only required at the exterior girder.

On curved bridges, diaphragms shall normally be placed on radial lines.

5.6.4.C.4 *Full or Partial Depth Intermediate Diaphragms*

Based on research done by Washington State University (WSU) on damage by over-height loads[24], the type of intermediate diaphragms for prestressed concrete girder bridges (including widenings) shall be as follows:

1. Full depth intermediate diaphragms as shown in the office standard plans shall be used for bridges crossing over roads of ADT > 50,000.
2. Either full depth or partial depth intermediate diaphragms as shown in the office standard plans may be used for all bridges not included in item a.

5.6.4.C.5 *Tub Girder Intermediate Diaphragms*

Where required, intermediate diaphragms shall be provided both inside and between prestressed concrete tub girders.

The diaphragms inside the tub may be cast in the field or at the fabrication plant. The bottom of the diaphragm inside the tub shall be at least 3 inches above the top of the bottom flange.

The diaphragms between the tubs shall be cast in the field. For diaphragms between the tubs, the roughened surface or shear keys on the sloped web faces may not be effective in resisting interface shear. All diaphragm and construction loads on the diaphragm before the deck cures and gains strength will then be resisted by the reinforcement or inserts alone.

5.6.4.D Skew Effects

Skew in prestressed concrete girder bridges affects structural behavior and member analysis and complicates construction.

5.6.4.D.1 *Analysis*

Normally, the effect of skew on girder analysis is ignored. It is assumed that skew has little structural effect on normal spans and normal skews. For short, wide spans and for extreme skews (values over 30°), the effect of the skew on structural action shall be investigated. All trapezoidal tub, slab, wide flange deck, wide flange thin deck and deck bulb-tee girders have a skew restriction of 30°.

Skews at ends of prestressed concrete girders cause prestressing strand force transfer to be unbalanced about the girder centerline at girder ends. In some cases, this has caused bottom flange cracking. Recent projects where this cracking occurred are Contract 8128 (Bridge Number 522/142N has W74G girders with 55 degree skew and 8 bottom flange straight strands) and Contract 8670 (Bridge Number 5/456E has WF100G girders with 56 degree skew and 40 bottom flange straight strands). Details shown in Figure 5.6.4-1 could be used to minimize bottom flange cracking for girders with large skews.

5.6.4.D.2 *Detailing*

To minimize labor costs and to avoid stress problems in prestressed concrete girder construction, the ends of girders for continuous spans shall normally be made skewed. Skewed ends of prestressed concrete girders shall always match the piers they rest on at either end.

Figure 5.6.4-1 Skewed Girder End Details to Prevent Cracking

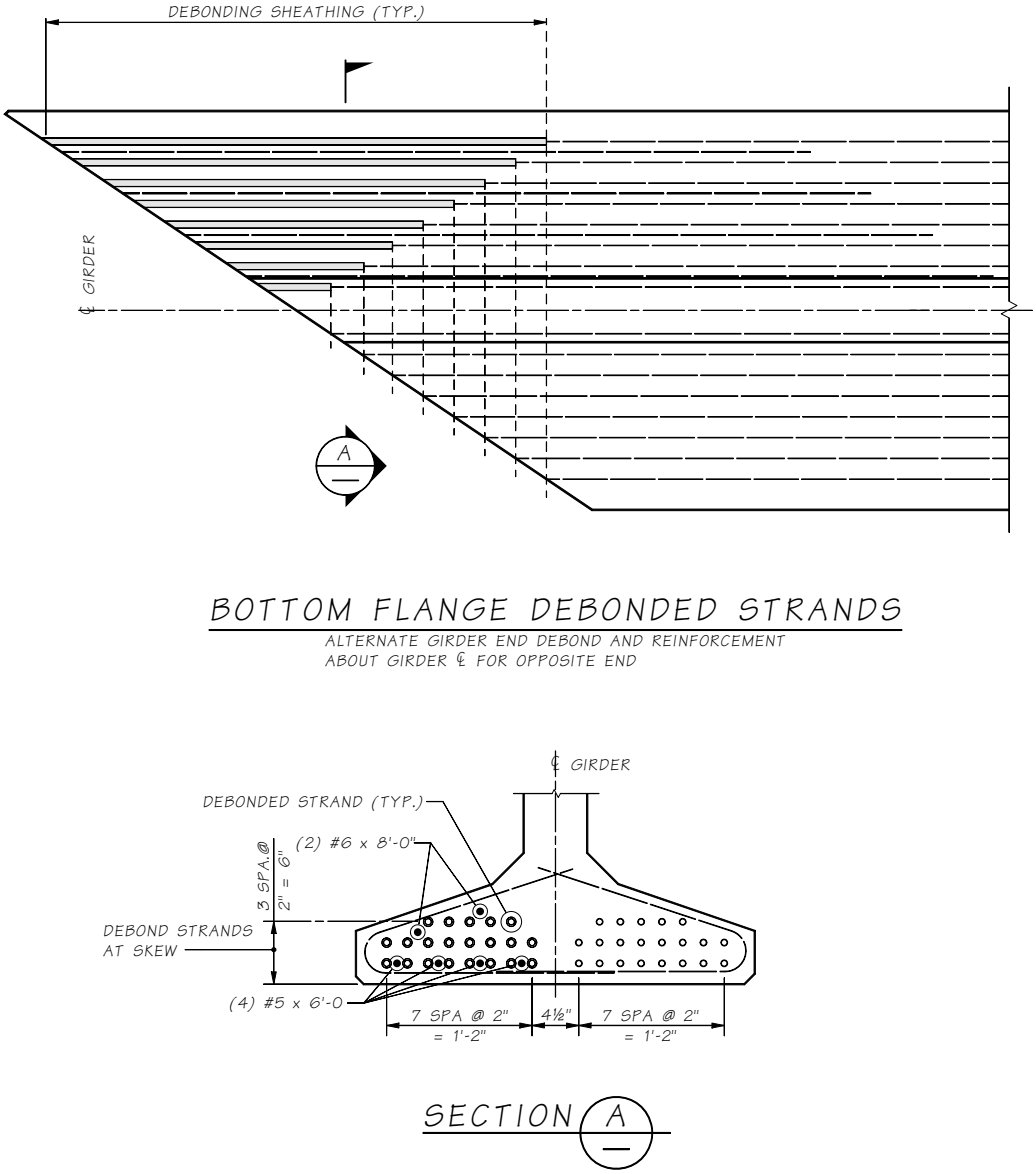

5.6.4.E Grade and Cross Slope Effects

Large cross slopes require an increased amount of the girder pad dimension ('A' dimension) necessary to ensure that the structure can be built. This effect is especially pronounced if the bridge is on a horizontal or vertical curve. Care must be taken that deck drainage details reflect the cross slope effect.

Girder lengths shall be modified for added length along grade slope.

5.6.4.F Curve Effect and Flare Effect

Curves and tapered roadways each tend to complicate the design of straight girders. The designer must determine what girder spacing to use for dead load and live load design and whether or not a refined analysis, that considers actual load application, is warranted. Normally, the girder spacing at centerline of span can be used for girder design, especially in view of the conservative assumptions made for the design of continuous girders.

5.6.4.G Girder Pad Reinforcement

Girders with a large "A" dimension may require a deep pad between the top of the girder and the bottom of the deck. When the depth of the pad at the centerline of the girder exceeds 6″, reinforcement shall be provided in the pad as shown in Figure 5.6.4-2.

Figure 5.6.4-2 Girder Pad Reinforcement

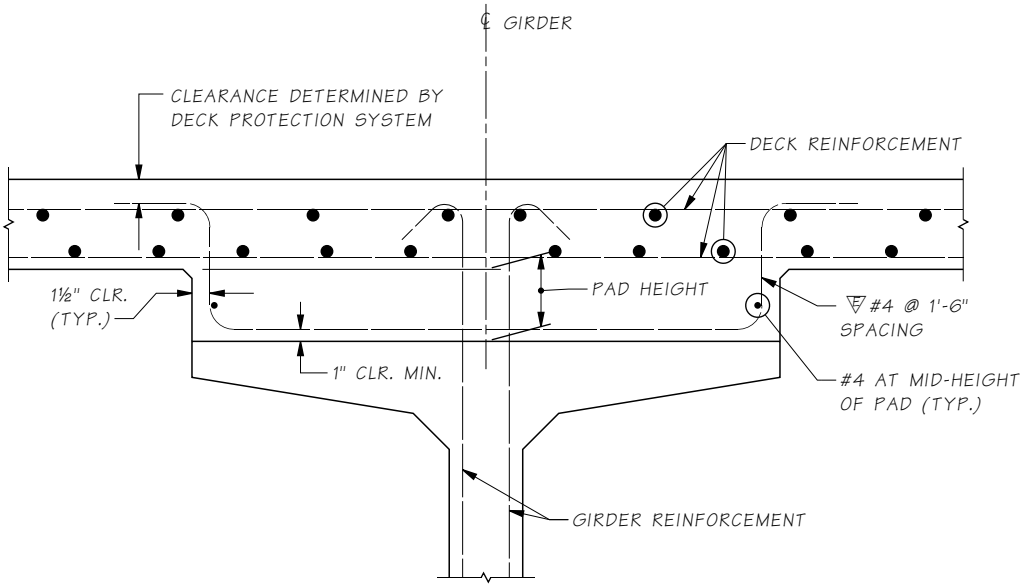

5.6.5 Repair of Damaged Prestressed Concrete Girders at Fabrication

When girders suffer defects during fabrication or damage before becoming part of a final structure, the girder repairs shall be addressed with pre-approved repair procedures from the current Annual Plant Approval document for the fabricator (see *Standard Specifications* Section 6-02.3(25)A). If the repairs cannot be addressed by this document, the fabricator shall initiate the Fax Resolution process from the current Annual Plant Approval document to address contract specific repairs with the Project Office and HQ Bridge Construction. Normally, no designer action is required. When evaluating repairs for unusual situations not covered, the designer must ensure that the required strength and appearance of the girder can be maintained. If stressing will occur after the repair is made, normally no test loading is required; however, such a test should be considered. See reference [14] for guidance.

5.6.6 Repair of Damaged Prestressed Concrete Girders in Existing Bridges

5.6.6.A General

This section is intended to cover repair of damaged girders on existing bridges. For repair of newly constructed girders, see Section 5.6.5. Over-height loads are a fairly common source of damage to prestressed concrete girder bridges. The damage may range from spalling and minor cracking of the lower flange of the girder to loss of a major portion of a girder section. Occasionally, one or more strands may be broken. The damage is most often inflicted on the exterior or first interior girder.

5.6.6.B Repair Procedure

The determination of the degree of damage to a prestressed concrete girder is largely a matter of judgment. Where the flange area has been reduced or strands lost, calculations can aid in making this judgment decision. The following are general categories of damage and suggested repair procedures (see references [15, 16]).

5.6.6.B.1 *Minor Damage*

If the damage is slight and concerns only spalling of small areas of the outside surface of the concrete, repair may be accomplished by replacing damaged concrete areas with concrete grout. The area where new concrete is to be applied shall first be thoroughly cleaned of loose material, dried, and then coated with epoxy.

5.6.6.B.2 *Moderate Damage*

If damage is moderate, (damage does not exceed replacement criteria in Item 4 below), a repair procedure shall be developed using the following guidelines. It is probable that some prestress will have been lost in the damaged area due to reduction in section and consequent strand shortening or through loss of strands. The following steps shall be part of any proposed repair procedure:

1. **Determine Condition**

   Sketch the remaining cross section of the girder and compute its reduced section properties. Determine the stress in the damaged girder due to the remaining prestress and loads in the damaged state. If severe overstresses are found, action must be taken to restrict loads on the structure until the repair has been completed. If the strand loss is so great that AASHTO prestress requirements cannot be met with the remaining strands, consideration should be given to replacing the girder.

2. **Restore Prestress If Needed**

   Prestress in damaged/severed strands can sometimes be restored with mechanical strand couplers. Damaged girders with broken 0.6” diameter strands may need to be repaired with 0.5” diameter strands and additional post-tensioning as needed. Current commercially-available couplers are capable of restoring full prestressing force in strands of up to ½” diameter. Verify that the restoration of full prestress force will not cause overstress in the damaged girder section.

3. **Prepare a Repair Plan**

   Draw a sketch to show the area of concrete removal required for replacement of damaged concrete, and for installation of any mechanical strand couplers required. The damaged area is to be thoroughly prepared, coated with epoxy, and repaired with grout equal in strength to the original concrete.

5.6.6.B.3 *Severe Damage*

Where the damage to the girder is considered to be irreparable due to loss of many strands, extreme cracking, etc., the girder shall be replaced. This has been done several times, but involves some care in determining a proper replacement sequence.

In general, the procedure consists of cutting through the existing deck slab and diaphragms and removing the damaged girder. Adequate exposed reinforcement steel must remain to allow splicing of the new bars. The new girder and new reinforcement is placed and previously cut concrete surfaces are cleaned and coated with epoxy. New deck slab and diaphragm portions are then poured.

It is important that the camber of the new girder be matched with that in the old girders. Excessive camber in the new girder can result in inadequate deck slab thickness. Girder camber can be controlled by prestress, curing time, or dimensional changes.

Casting the new bridge deck and diaphragms simultaneously in order to avoid overloading the existing girders in the structure should be considered. Extra bracing of the girder at the time of casting the bridge deck will be required.

Methods of construction shall be specified in the plans that will minimize inconvenience and dangers to the public while achieving a satisfactory structural result. High early strength grouts and concretes should be considered.

In case of replacement of a damaged girder, the intermediate diaphragms adjacent to the damaged girder shall be replaced with full depth diaphragms as shown in Figure 5.6.6-1.

In case of replacement of a damaged girder, the replacement girder should be of the same type or the same depth as the original damaged girder.

In case of repair of a damaged girder with broken or damaged prestressing strands, the original damaged strands shall be replaced with similar diameter strands. Restoration of the prestress force as outlined in Section 5.6.6 B-2b shall be considered.

Existing bridges with pigmented sealer shall have replacement girders sealed. Those existing bridges without pigmented sealer need not be sealed.

Figure 5.6.6-1 Full Depth Intermediate Diaphragm Replacement

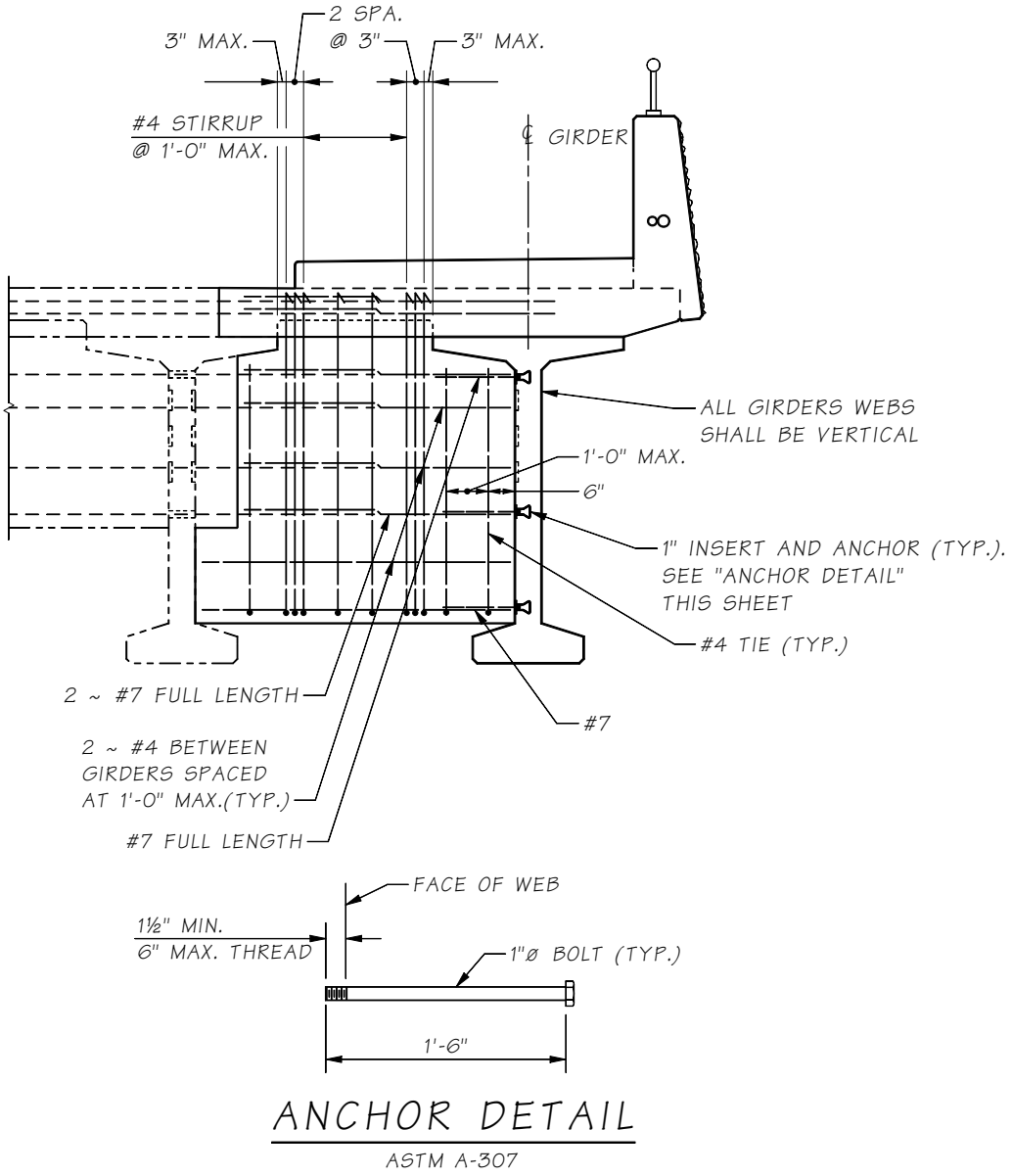

5.6.6.B.4 *Repair vs. Replacement of Damaged Girder*

Several factors need to be considered when evaluating whether to repair or to replace a damaged girder. Among them are the level of concrete damage, number of broken strands, location and magnitude of web damage, permanent offset of the original girder alignment, and overall structural integrity. Other considerations include fresh damage to previously damaged girders, damage to adjacent girders, and cost of repair versus replacement. Ultimately, the evaluation hinges on whether the girder can be restored to its original capacity and whether the girder can be repaired sufficiently to carry its share of the original load.

The following guidelines describe damaged girder conditions which require replacement:

- **Strand Damage** – More than 25 percent of prestressing strands are damaged/severed. If over 25 percent of the strands have been severed, replacement is required. Splicing is routinely done to repair severed strands. However, there are practical limits as to the number of couplers that can be installed in the damaged area.

- **Girder Displacements** – The bottom flange is displaced from the horizontal position more than ½″ per 10′ of girder length. If the alignment of the girder has been permanently altered by the impact, replacement is required. Examples of non-repairable girder displacement include cracks at the web/flange interface that remain open. Abrupt lateral offsets may indicate that stirrups have yielded. A girder that is permanently offset may not be restorable to its original geometric tolerance by practical and cost-effective means.
- **Concrete Damage at Harping Point** – Concrete damage at harping point resulting in permanent loss of prestress. Extreme cracking or major loss of concrete near the harping point may indicate a change in strand geometry and loss in prestress force. Such loss of prestress force in the existing damaged girder cannot be restored by practical and cost effective means, and requires girder replacement.
- **Concrete Damage at Girder Ends** – Severe concrete damage at girder ends resulting in permanent loss of prestress or loss of shear capacity. Extreme cracking or major loss of concrete near the end of a girder may indicate unbonding of strands and loss in prestress force or a loss of shear capacity. Such loss of prestress force or shear capacity in the existing damaged girder cannot be restored by practical and cost-effective means, and requires girder replacement.
- **Significant Concrete Loss from the Web** – Significant damage of concrete in the web that results in loss of shear capacity shall require girder replacement. The web damage shall be considered significant when more than 25 percent of web section is damaged or when shear reinforcement has yielded.

Damaged girders shall be replaced in accordance with current WSDOT design criteria and with current girder series.

There are other situations as listed below which do not automatically trigger replacement, but require further consideration and analysis.

- **Significant Concrete Loss from the Bottom Flange** – For girder damage involving significant loss of concrete from the bottom flange, consideration should be given to verifying the level of stress remaining in the exposed prestressing strands. Residual strand stress values will be required for any subsequent repair procedures.
- **Adjacent Girders** – Capacity of adjacent undamaged girders. Consideration must be given as to whether dead load from the damaged girder has been shed to the adjacent girders and whether the adjacent girders can accommodate the additional load.
- **Previously Damaged Girders** – Damage to a previously damaged girder. An impact to a girder that has been previously repaired may not be able to be restored to sufficient capacity.
- **Cost** – Cost of repair versus replacement. Replacement may be warranted if the cost of repair reaches 70 percent of the replacement project cost.
- **Continuous Girders** – Continuous girders with or without raised crossbeam that requires supporting falsework in the adjacent spans.
- **Superstructure Replacement** – Superstructure replacement shall be considered if more that 50 percent of all girders in the span are damaged or if there is a high risk of future impacts from over-height loads.

5.6.6.C Miscellaneous References

The girder replacement contracts and similar jobs listed in Table 5.6.6-1 should be used for guidance:

Table 5.6.6-1 Girder Replacement Contracts

Contract	Project Name	Bridge Number	Total Bridge Length (ft)	Year work planned	Work Description
7646	I-5 SR 11 Interchange Chuckanut Overcrossing Bridge	11/1	287	2009	Replace damaged PCG
8133	US 395 Court Street Bridge – Replace / Repair Girders	395/103	114	2011	Replace damaged PCG
8251	I-5 113th Ave SW Bridge Special Repair	5/309	204	2012	Replace damaged PCG
8220	SR 16 Olympic Drive NW Bridge Special Repair	16/120	207	2012	Replace damaged PCG
8218	SR 167 24th St. E Bridge Special Repair	167/38	382	2012	Replace damaged PCG
8489	I-5 Chamber Way Bridge Special Repair	5/227	185	2014	Replace damaged PCG
8598	SR 16 Olympic Drive NW Bridge Special Repair	16/120	207	2014	Replace damaged PCG
8801	I-5 NBCD Over 41st Division Dr. Special Repair	5/411NCD	172	2015	Replace damaged PCG
8810	I-5 Birch Bay Lynden Rd Bridge Bridge Repair	5/834	272	2015	Replace damaged PCG
8813	I-90, Front St Bridge 90/66S Girder Replacement	90/66S	231	2015	Replace damaged PCG
8828	I-90 Stampede Pass Interchange – Bridge Repair	90/113	151	2016	Replace damaged PCG span
9465	I-90 Danekas Rd Undercrossing – Bridge Repair	90/332	225	2019	Replace damaged PCG span

5.6.7 Deck Girders

5.6.7.A General

The term “deck girder” refers to a girder whose top flange or surface is the driving surface, with or without an overlay or CIP topping. They include slab, double-tee, ribbed, deck bulb-tee, wide flange deck and wide flange thin deck girders.

Unless noted otherwise deck girders that are not connected to adjacent girders shall use a Type 1 deck protection system; girders that only have shear connections with adjacent girders shall use a Type 3 or Type 4 deck protection system; and girders that have moment connections with adjacent girders shall use Type 2 or Type 3 deck protection systems. The requirements for bridge deck protection systems are covered in Section 5.7.4.

Deck girders without a composite CIP concrete deck or topping shall have a minimum concrete cover of 2″ over the top mat. The top mat of reinforcement in the deck girder (top flange) shall be epoxy-coated.

5.6.7.B Slab Girders

Slab girder spans between centerlines of bearing shall be limited to the prestressed concrete girder height multiplied by 30 due to unexpected variations from traditional beam camber calculations.

Standard configurations of slab girders are shown in the girder standard plans. The width of slab girders should not exceed 8′-0″. Designers should minimize the number of different widths of slabs on projects in order simplify fabrication. For slab girders bearing on reinforced soil, standard details shall be modified per Section 7.5.2.A.

Slab girder spans shall use a Type 4 deck protection system. The longitudinal reinforcement shall #5 bars be spaced at 12 inches maximum and the transverse reinforcement shall be #5 bars spaced at 6 inches maximum.

The AASHTO LRFD criteria for deflection shall be satisfied for slab girders.

A minimum of two permanent top strands shall be provided for slab girders, one adjacent to each edge. Additional permanent top strands can be used if required to control girder end tensile stresses as well as concrete stresses due to plant handling, shipping and erection.

In some cases it may be necessary to use temporary top strands to control girder end tensile stresses as well as concrete stresses due to plant handling, shipping and erection. These strands shall be bonded for 10′ at both ends of the girder, and unbonded for the remainder of the girder length. Temporary strands shall be cut prior to equalizing girders and placing the CIP bridge deck. Designers may also consider other methods to control girder stresses including debonding permanent strands at girder ends and adding mild steel reinforcement.

Girder equalization, shear keys and weld ties are not required when a minimum 5″ composite CIP bridge deck is placed over slab girders. Differential camber is expected to be small but the designer should ensure it can be accommodated by the CIP deck.

Designers should ensure that the cross slope of girder supports are the same at both ends of each girder in order to prevent girder torsion, point loads, and gaps between the girder and the bearings.

Lateral restraint of slab girder superstructures with end type A at abutments shall be provided by external girder stops, one on each side of the bridge.

Utilities and appurtenances shall not be run through the voids in slab girders.

5.6.7.C Double-Tee and Ribbed Deck Girders

Double-tee and ribbed deck girders shall be limited to widening existing similar structures. A hot mix asphalt (HMA) overlay with membrane shall be specified. These sections are capable of spanning up to 60′.

5.6.7.D Deck Bulb-Tee Girders

Deck bulb-tee girders have standard girder depths of 35, 41, 53, and 65 inches. The top flange/deck may vary from 4-feet 1-inch to 6-feet wide. They are capable of spanning up to 155 feet. Deck bulb-tee girders shall be limited to pedestrian bridges, temporary bridges and to widening existing similar structures.

Deck bulb-tee girders shall be installed with girder webs plumb. Bridge deck superelevation shall be accommodated by varying the top flange thickness. Superelevation should be limited so that lifting embedments can be located at the center of gravity of the girder to prevent complications with lifting, hauling and erection. Use of deck bulb-tee girders should be avoided when superelevation transitions occur within the span.

Girder size and weight shall be evaluated for shipping and hauling to the project site.

5.6.7.E Wide Flange Deck Girders

Wide flange deck girders have standard girder depths ranging from 39 inches to 103 inches. The top flange/deck may vary from 5-feet to 8-feet wide.

Bridge deck superelevation shall be accommodated by varying the top flange thickness. Superelevation should be limited so that lifting embedments can be located at the center of gravity of the girder to prevent complications with lifting, hauling and erection. Use of wide flange deck girders should be avoided on roadways with superelevation transitions or sharp horizontal curvature. They shall be limited to spans where the pier skew angles are within 10° of each other. Designers should balance weight, prestress and camber between adjacent girders to improve fit-up.

Biaxial bending stress and the effect of an eccentric shear center shall be considered when roadway cross-slopes exceed 0.04 ft/ft.

Girder size and weight shall be evaluated for shipping and hauling to the project site.

1. Wide Flange Deck Girders with Mechanical Connections

   These girders rely on weld ties and a grouted keyway to connect adjacent girders.

   These girders shall be limited to pedestrian bridges, temporary bridges and to widening existing similar structures.

2. Wide Flange Deck Girders with UHPC Connections

   These girders rely on a short non-contact lap splice between extended transverse reinforcement in cast-in-place closures of ultra high performance concrete. A non-structural overlay shall be used on these bridges to protect the deck girders as well as accommodate differential girder camber. A polyester concrete overlay can be used. An HMA overlay can be used where the approach roadways are HMA. Modified concrete overlays may be considered, but special consideration is required to prevent debonding of the overlay from UHPC.

   These girders shall be limited to simple span bridges with roadway with cross- slopes of 0.04 ft/ft or less. WF39DG, WF45DG, and WF53DG girders may be erected with the web plumb or perpendicular to the roadway surface. Erect all other girders with the web plumb.

   Due to the risk of over height impacts and the difficulty of repairing UHPC connections, these bridges shall be limited to spans with at least 16’-6” of vertical clearance above roadways below.

   Precise fit-up between the top flanges of adjacent girders is necessary for a quality UHPC connection joint. When the ends of girders are skewed, top flange edges are vertically offset relative to one another due to camber. This is commonly known as the “saw tooth” effect. The “saw tooth” effect can be accommodated by negating the

effects of camber with longitudinal top flange thickening or precamber or adjusting the bearing elevations so that adjacent top flanges align. Adjustments typically consist of raising one end of the girder and lowering the other to match the profile of the adjacent girder. This approach is only viable if the roadway profile is made to match the camber.

5.6.7.F Wide Flange Thin Deck Girders

Wide flange thin deck girders have standard girder depths ranging from 36 inches to 100 inches. The top flange may vary from 5-feet to 8-feet wide.

Welded ties and grouted keys at flange edges are not required. The CIP bridge deck thickness shall be capable of accommodating expected girder camber variations and tolerances using a Type 1 Deck Protection System. The deck shall be assumed to be 7" minimum in preliminary design, but may be reduced to as thin as 6" in final design.

Two mats of transverse reinforcement in the CIP bridge deck shall be designed to resist live loads and superimposed dead loads. The cover to the bottom of the bottom mat shall be 1" minimum. Bottom mat longitudinal bars are not required.

Wide flange thin deck girders shall be installed with girder webs plumb. Bridge deck superelevation shall be accommodated by varying the CIP bridge deck thickness. Use of wide flange thin deck girders should be avoided with large superelevations in order to limit CIP bridge deck thickness.

5.6.8 Prestressed Concrete Tub Girders

5.6.8.A General

Prestressed concrete tub girders (U and UF sections) are an option for moderate bridge spans.

The standard tub girders (U sections) have 4′-0″ or 5′-0″ bottom flange widths and are 4′-6″, 5′-6″ or 6′-6″ deep. A 6″ deep top flange can be added to tub girders (UF sections) to improve structural efficiency and to accommodate placement of formwork and stay-in-place precast deck panels.

Drain holes shall be provided at the low point of the tub girders at the centerline of the bottom flange.

5.6.8.B Curved Tub Girders

Curved tub girders may be considered for bridges with moderate horizontal radiuses.

Curved tub girders can either be designed in one piece or in segments depending on span configurations and shipping limitations. Curved tub girders are post-tensioned at the fabrication plant and shipped to the jobsite. Additional jobsite post-tensioning may be required if segment assembly is necessary, or if continuity over intermediate piers is desired. Closure joints at segment splices shall meet the requirements of Section 5.9.4.C.

The following limitations shall be considered for curved tub girders:

1. The overall width of curved segments for shipment shall not exceed 16 feet.
2. The location of the shipping supports shall be carefully studied so that the segment is stable during shipping. The difference in dead load reactions of the shipping supports within the same axle shall not exceed 5 percent.

3. The maximum shipping weight of segments may be different depending on the size of the segments. The shipping weight shall meet the legal axle load limits set by the RCW, but in no case shall the maximum shipping weight exceed 275 kips.
4. The minimum web thickness shall be 10″. Other cross-sectional dimensions of WSDOT standard tub girders are applicable to curved tub girders.
5. Effects of curved tendons shall be considered in accordance with Section 5.8.1.F.
6. The clear spacing between the outside diameter of ducts shall be 2″ min. The duct diameter shall not exceed 4½″.

5.6.9 Prestressed Concrete Girder Checking Requirement

1. Shear reinforcing size and spacing shall be determined by the designer.
2. Determine lifting location and required concrete strength at release to provide adequate stability during handling. Generally temporary strands provide additional stability for lifting and transportation, and reduce the camber. Less camber allows for less "A" dimension and concrete pad dead weight on the structure. Temporary strands are cut after the girders are erected and braced and before the intermediate diaphragms are cast.
3. Due to the extreme depth of the WF83G, WF95G, and WF100G girders, and possible tilt at the piers for profile grades, the designer will need to pay particular attention to details to assure the girders will fit and perform as intended.
4. Check edge distance of supporting cross beam.

5.6.10 Review of Shop Plans for Pre-tensioned Girders

Pretensioning shop drawings shall be reviewed by the designer. Shop drawings, after review by the designer, shall be stamped with the official seal and returned to the bridge construction support office. The review must include:

1. All prestressing strands shall be of ½″ or 0.6″ diameter grade 270 low relaxation uncoated strands.
2. Number of strands per girder.
3. Jacking stresses of strands shall not exceed $0.75f_{pu}$.
4. Strand placement patterns and harping points.
5. Temporary strand pattern, bonded length, location and size of blockouts for cutting strands.
6. Procedure for cutting temporary strands and patching the blockouts shall be specified.
7. Number and length of extended strands and rebars at girder ends.
8. Locations of holes and shear keys for intermediate and end diaphragms.
9. Location and size of bearing recesses.
10. Saw tooth at girder ends.
11. Location and size of lifting loops or lifting bars.
12. All horizontal and vertical reinforcement.
13. Girder length and end skew.

5.7 Bridge Decks

Concrete bridge decks shall be designed using the Traditional Design of AASHTO LRFD Section 9.7.3 as modified by this section.

The following information is intended to provide guidance for bridge deck thickness and transverse and longitudinal reinforcement of bridge decks. Information on deck protection systems is given in Section 5.7.4.

5.7.1 Bridge Deck Requirements

5.7.1.A Minimum Bridge Deck Thickness

The minimum bridge deck thickness (including 0.5″ wearing surface) shall be 7.5″ for concrete girder bridges, 8.0″ for steel girder bridges, and 8.5″ for concrete girder bridges with SIP deck panels. This minimum bridge deck thickness may be reduced by 0.5″ for bridges with Deck Protection Systems 2, 3 and 5.

The minimum CIP bridge deck thickness for prestressed concrete slab girders is 5″.

For bridge deck overhangs that support traffic barriers, the minimum thickness shall be 8”. This minimum is intended to satisfy crashworthiness requirements as well as provide clearance for hooked transverse bars in the deck.

Minimum bridge deck thicknesses are established in order to ensure that overloads will not result in premature bridge deck cracking.

The minimum clearance between top and bottom reinforcing mats shall be 1″.

5.7.1.B Computation of Bridge Deck Strength

The design thickness for usual bridge decks are shown in Figures 5.7.1-1 and 2.

The thickness of the bridge deck and reinforcement in the area of the cantilever may be governed by traffic barrier loading. Wheel loads plus dead load shall be resisted by the sections shown in Figure 5.7.1-2.

Design of the cantilever is normally based on the expected depth of the bridge deck at centerline of girder span. This is usually less than the dimensions at the girder ends.

Figure 5.7.1-1 Depths for Bridge Deck Design at Interior Girder

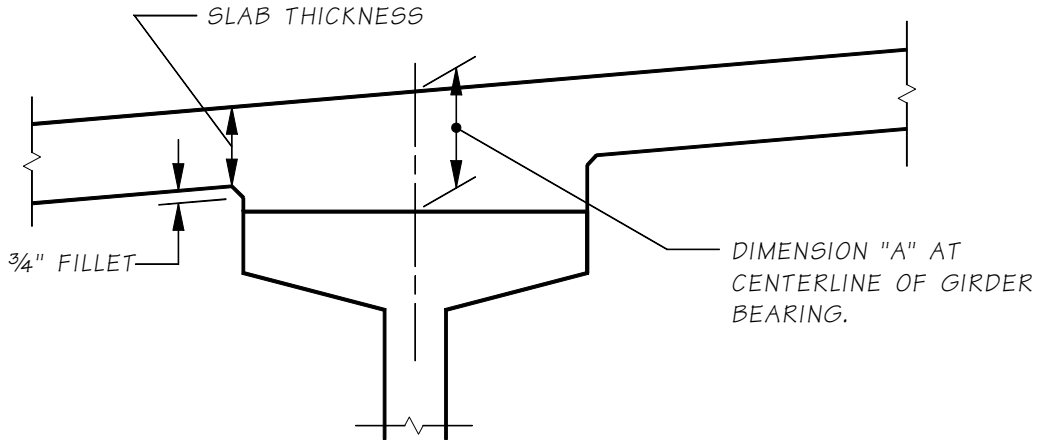

Figure 5.7.1-2 Depths for Bridge Deck Design at Overhang

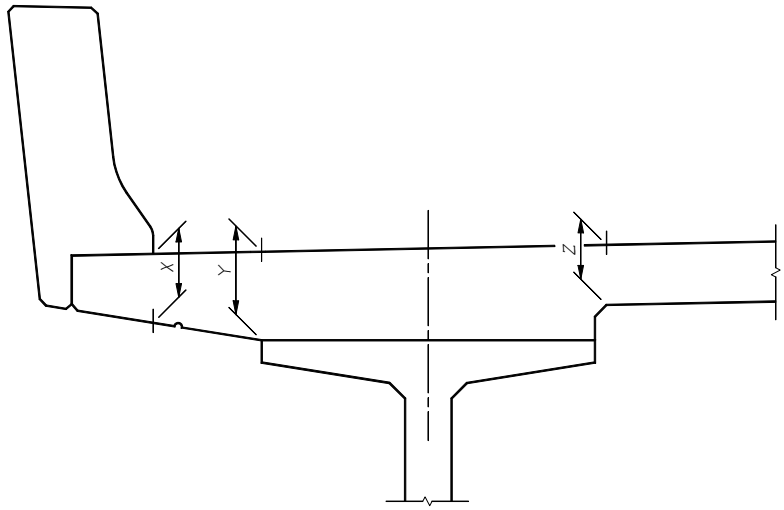

5.7.1.C Computation of "A" Dimension

The distance from the top of the bridge deck to the top of the girder at centerline bearing at centerline of girder is represented by the "A" Dimension. This ensures that adequate allowance will be made for excess camber, transverse deck slopes, vertical and horizontal curvatures. Where temporary prestress strands at top of girder are used to control the girder stresses due to shipping and handling, the "A" dimension must be adjusted accordingly.

The note in the left margin of the layout sheet shall read: "A" Dimension = X" (not for design).

5.7.1.D Staged Construction

Bridge decks constructed in stages shall have a longitudinal closure pour between adjacent stages. Closure pours allow for dead load deflection, balanced load distribution and isolation of decks from vibration caused by adjacent traffic. After closure pour concrete is placed, traffic should be restricted from early-age loading of the concrete.

5.7.2 Bridge Deck Reinforcement

5.7.2.A Transverse Reinforcement

The size and spacing of transverse reinforcement may be governed by interior bridge deck span design and cantilever design. Where cantilever design governs, short hooked bars may be added at the bridge deck edge to increase the reinforcement available in that area. Top transverse reinforcement is always hooked at the bridge deck edge unless a traffic barrier is not used. Top transverse reinforcement is preferably spliced at some point between girders in order to allow the clearance of the hooks to the bridge deck edge forms to be properly adjusted in the field. Usually, the bridge deck edge hooks will need to be tilted in order to place them. On larger bars, the clearance for the longitudinal bar through the hooks shall be checked. Appendices 5.3-A5 through 5.3-A8 can be used to aid in selection of bar size and spacing.

For skewed spans, the transverse bars are placed normal to bridge centerline and the areas near the expansion joints and bridge ends are reinforced by partial length bars. For raised crossbeam bridges, the bottom transverse bridge deck reinforcement is discontinued at the crossbeam.

The spacing of bars over the crossbeam must be detailed to be large enough to allow concrete to be poured into the crossbeam. For typical requirements, see Section 5.3.3.D.

For bridge decks with a crowned roadway, the bottom surface and rebar shall be flat, as shown in Figure 5.7.2-1.

Figure 5.7.2-1 Bottom of Bridge Deck at Crown Point

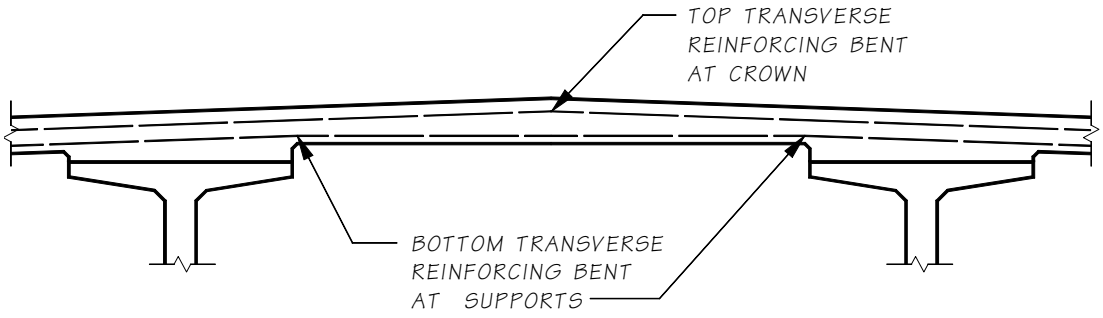

5.7.2.B Longitudinal Reinforcement

This section discusses reinforcement requirements for resistance of longitudinal moments in continuous multi-span prestressed concrete girder bridges and is limited to reinforcement in the bridge deck since capacity for resisting positive moment is provided by the girder reinforcement. For longitudinal reinforcement requirements for decks on steel girder bridges, see Chapter 6.

5.7.2.B.1 *Simple Spans*

For simple span bridges, longitudinal bridge deck reinforcement is not required to resist negative moments and therefore the reinforcement requirements are nominal. Figure 5.7.2-2 defines longitudinal reinforcement requirements for these decks. The bottom longitudinal reinforcement is defined by AASHTO LRFD Section 9.7.3.2 requirements for distribution reinforcement. The top longitudinal reinforcement is based on current office practice.

Figure 5.7.2-2 Nominal Longitudinal Deck Slab Reinforcement

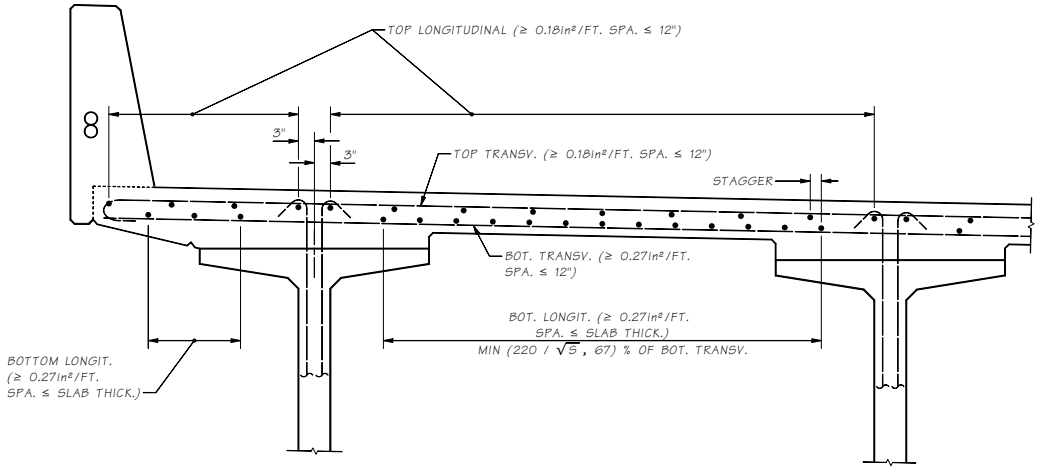

SECTION
TYPICAL SLAB REINFORCEMENT

5.7.2.B.2 *Continuous Spans*

Continuity reinforcement shall be provided at supports for loads applied after establishing continuity. The longitudinal reinforcement in the bridge deck at intermediate piers is dominated by the negative moment requirement. Where these bars are cut off, they are lapped by the nominal top longitudinal reinforcement described in Section 5.7.2.D.

Continuity reinforcement for structures designed as simple spans may be terminated where no longer required by load demands. Reinforcing bars shall be developed beyond the point where the bar is required, but they do not need to be anchored farther as shown in Figure 5.7.2-4.

The required bridge deck thickness for various bar combinations is shown in Table 5.7.2-1.

5.7.2.C Distribution of Flexural Reinforcement

The provision of AASHTO LRFD Section 5.6.7 for class 2 exposure condition shall be satisfied for both the top and bottom faces of the bridge deck.

Table 5.7.2-1 Minimum Bridge Deck Thickness for Various Bar Sizes

	Minimum Bridge Deck Thickness (Inches) Transverse Bar		
Longitudinal Bar	**#5**	**#6**	**#7**
#4	7½	--	--
#5	7½	7½	7¾
#6	7½	7¾	8
#7	7¾	8	8¼
#8	8	8½	8¾
#9	8½	8¾	9
#10	8¾	--	--

Note:
Deduct ½″ from minimum bridge deck thickness shown in table when an overlay is used.

5.7.2.D Bar Patterns

Figure 5.7.2-3 shows two typical top longitudinal reinforcing bar patterns. Care must be taken that bar lengths conform to the requirements of Section 5.1.2.

Figure 5.7.2-3 Longitudinal Reinforcing Bar Patterns

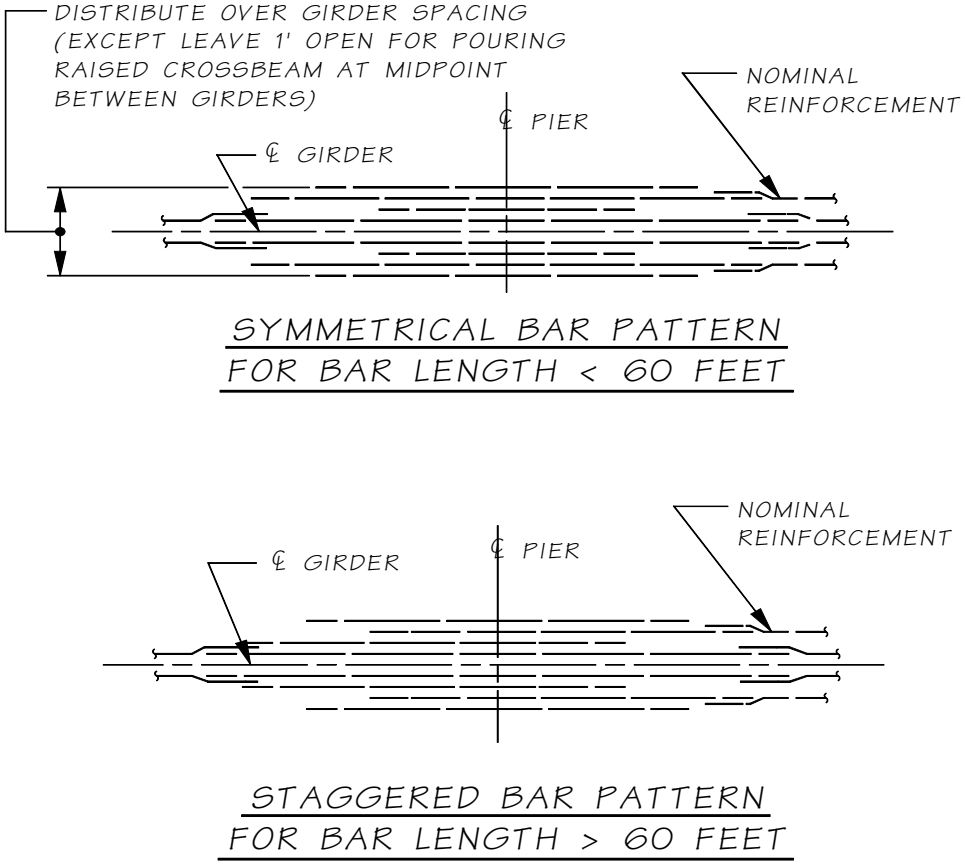

All bars shall be extended by their development length beyond the point where the bar is required.

Normally, no more than 33 percent of the total area of main reinforcing bars at a support (negative moment) or at midspan (positive moment) shall be cut off at one point. Where limiting this value to 33 percent leads to severe restrictions on the reinforcement pattern, an increase in figure may be considered. Two reinforcement bars shall be used as stirrup hangers.

Figure 5.7.2-4 Bar Splice Within Moment Envelope

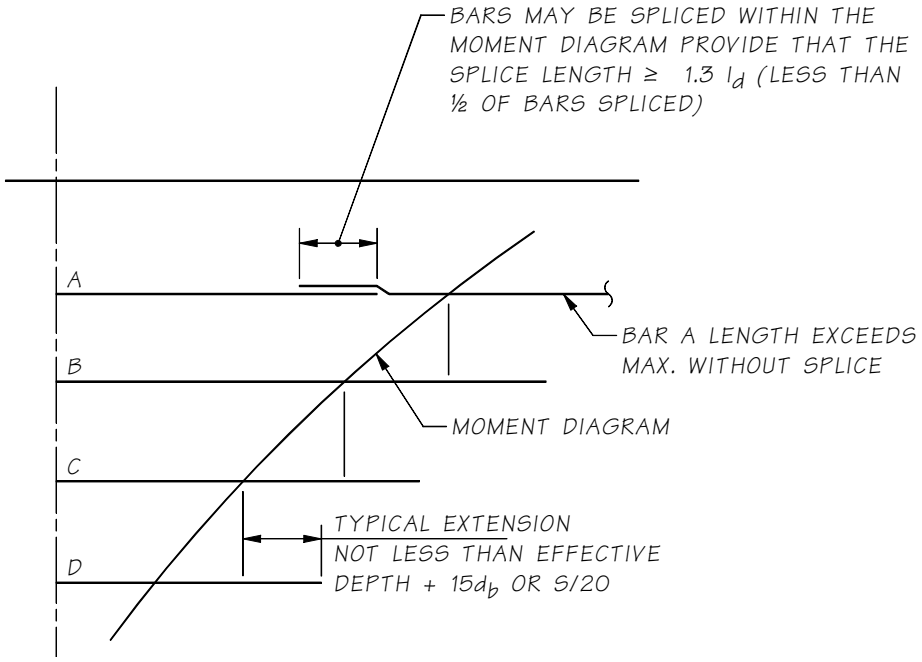

5.7.2.E Concrete Bridge Deck Design and Detailing

These requirements are primarily for beam-slab bridges with main reinforcement perpendicular to traffic:

- Minimum cover over the top layer of reinforcement shall be 2.5″ including 0.5″ wearing surface (Deck Protection Systems 1 and 4). The minimum cover over the bottom layer reinforcement shall be 1.0″.
- The minimum clearance between top and bottom reinforcing mats shall be 1″.
- A maximum bar size of #5 is preferred for longitudinal and transverse reinforcement in the bridge deck except that a maximum bar size of #7 is preferred for longitudinal reinforcement at intermediate piers. #6 bars may be used for transverse reinforcement, but designers should be aware that they may not be fully developed at overhang curblines for all traffic barriers.
- The minimum amount of reinforcement in each direction shall be 0.18 in^2/ft for the top layer and 0.27 in^2/ft for the bottom layer. The amount of longitudinal reinforcement in the bottom of bridge decks shall not be less than $\frac{220}{\sqrt{S}} \leq 67$ percent of the positive moment as specified in AASHTO LRFD Section 9.7.3.2.
- Top and bottom reinforcement in longitudinal direction of bridge deck shall be staggered to allow better flow of concrete between the reinforcing bars.
- The maximum bar spacing in transverse and longitudinal directions for the top mat, and transverse direction of the bottom mat shall not exceed 12″. The maximum bar spacing for bottom longitudinal within the effective length, as specified in AASHTO LRFD Section 9.7.2.3, shall not exceed the deck thickness.
- Allow the Contractor the option of either a roughened surface or a shear key at the intermediate pier diaphragm construction joint.
- Both top and bottom layer reinforcement shall be considered when designing for negative moment at the intermediate piers.
- Reduce lap splices if possible. Use staggered lap splices for both top and bottom in longitudinal and transverse directions.

5.7.3 Stay-In-Place Deck Panels

5.7.3.A General

The use of precast, prestressed stay-in-place (SIP) deck panels for bridge decks may be investigated at the preliminary design stage. The acceptance evaluation will consider such items as extra weight for seismic design and the resulting substructure impacts.

The composite deck system consisting of precast prestressed concrete deck panels with a CIP topping has advantages in minimizing traffic disruption, speeding up construction and solving constructability issues on certain projects. Contractors, in most cases, prefer this composite deck panel system for bridge decks in traffic congested areas and other specific cases.

Precast prestressed stay-in-place deck panels typically do not require air-entrained concrete because they are protected from saturation under service.

SIP deck panels may be used on WSDOT bridges with WSDOT State Bridge and Structures Engineer approval. Details for SIP deck panels are shown on the Bridge Standard Drawings website (www.wsdot.wa.gov/Bridge/Structures/StandardDrawings.htm).

Steel deck forms are not permitted in order to allow inspection of deck soffits and to avoid maintenance of a corrosion protection system.

5.7.3.B Design Criteria

The design of SIP deck panels follows the AASHTO *LRFD Bridge Design Specifications* and the *PCI Bridge Design Manual*. The design philosophy of SIP deck panels is identical to simple span prestressed concrete girders. They are designed for Service Limit State and checked for Strength Limit State. The precast panels support the dead load of deck panels and CIP topping, and the composite SIP deck panel and CIP cross-section resists the live load and superimposed dead loads. The tensile stress at the bottom of the panel is limited to zero per WSDOT design practice.

5.7.3.C Limitations on SIP Deck Panels

The conventional full-depth CIP bridge deck shall be used for most applications. However, the WSDOT Bridge and Structures Office may allow the use of SIP deck panels with the following limitations:

1. SIP deck panels shall not be used in negative moment regions of continuous conventionally reinforced bridges. SIP deck panels may be used in post-tensioned continuous bridges. Negative moment regions shall be determined as the envelope of moments from all Service and Strength Limit states.
2. Bridge widening. SIP deck panels are not allowed in the bay adjacent to the existing structure because it is difficult to set the panels properly on the existing structure, and the requirement for a CIP closure. SIP deck panels can be used on the other girders when the widening involves multiple girders.
3. Phased construction. SIP deck panels are not allowed in the bay adjacent to the previously placed deck because of the requirement for a CIP closure.
4. Prestressed concrete girders with narrow flanges. Placement of SIP deck panels on girders with flanges less than 12″ wide is difficult.

5. A minimum bridge deck thickness of 8.5″, including 3.5″ precast deck panel and 5″ CIP concrete topping shall be specified.
6. SIP deck panels are not allowed for steel girder bridges.

5.7.4 Bridge Deck Protection

The roadway surface for all bridge structures shall conform to one of the listed deck protection systems. Special conditions (i.e. a widening) where it may be desirable to deviate from the standard deck protection systems require approval of the WSDOT Bridge Asset Management Unit.

Preliminary plans shall indicate the protection system in the left margin in accordance with Section 2.3.8.

For bridge deck rehabilitation projects, the WSDOT Bridge Asset Management Unit will recommend the Deck Protection System and type of overlay if applicable.

Saw cutting or grinding pavement items are not allowed on the bridge decks. Rumble strips and recessed pavement markers shall not be placed on bridge decks, or approach slab surfaces whether they are concrete or asphalted as stated in *Standard Specifications* Section 8-08 and 8-09, respectively.

Traffic detection loops shall not be located in an existing bridge surface. They may be installed during the construction of bridge decks prior to placing the deck concrete in accordance with Standard Plan J-50.16.

5.7.4.A Deck Protection Systems

The following paragraphs describe five WSDOT protective systems used to protect a concrete bridge deck design.

5.7.4.A.1 *Type 1 Protection System*

This is the default deck protection system for cases where a deck protection system has not been specified. Type 1 protection system shall be used for cast-in-place bridge decks with two layers of reinforcement, see Figure 5.7.4-1. This also applies to CIP slab bridges, deck replacements and the widening of existing decks. System 1 consists of the following:

1. A minimum 2½″ of concrete cover over top bars of deck reinforcing for cast-in-place decks. The cover includes a ½″ wearing surface and ¼″ tolerance for the placement of the reinforcing steel. Bottom cover shall be 1” minimum.
2. Both the top and bottom mat of deck reinforcing shall be epoxy-coated or equivalent corrosion protection system as specified in BDM 5.1.2.
3. Girder stirrups and horizontal shear reinforcement do not require epoxy-coating or equivalent corrosion protection system as specified in BDM 5.1.2..

Bridge decks using partial depth precast prestressed SIP deck panels shall be considered Type 1 protections systems, except that reinforcement and prestressing strand need not be epoxy coated.

Figure 5.7.4-1 Type 1 Protection System

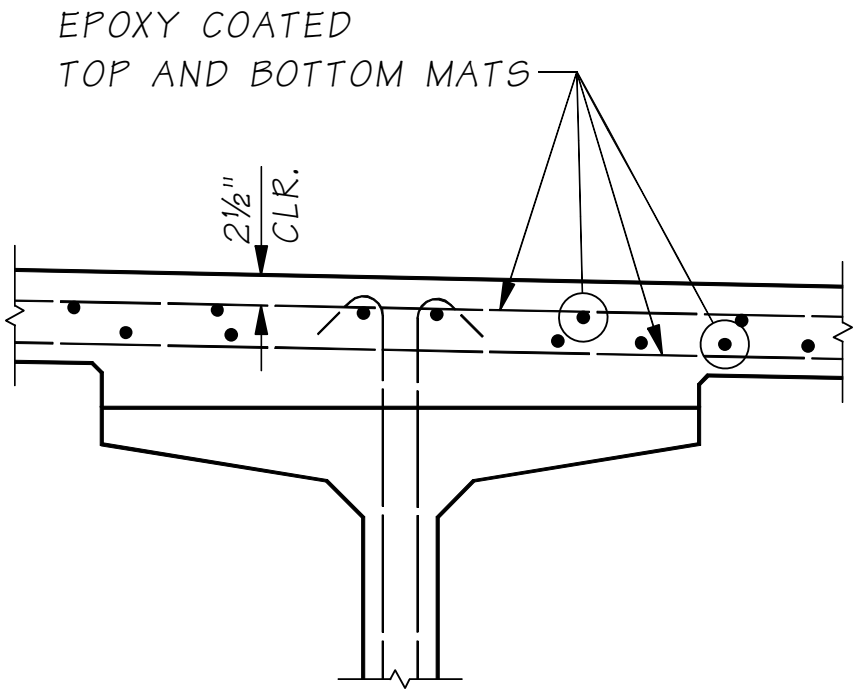

5.7.4.A.2 *Type 2 Protection System*

This protection system consists of cementitious and polymer-based overlays on new and existing bridge decks, see Figure 5.7.4-2 for an example of a modified concrete overlay on a deck rehabilitation project.

For new bridges, a 1½″ modified concrete overlay shall be used.

The common overlays are as follows.

1. **1½″ Modified Concrete Overlay**

   Concrete overlays are generally described as a 1.5″ minimum unreinforced layer of modified concrete. Overlay concrete is modified to provide a low permeability that slows or prevents the penetration of chlorides into the bridge deck, but also has a high resistance to rutting. Ideally, the concrete cover to the top layer of reinforcement should be 2.5″. For new structures, the deck reinforcement shall be epoxy coated or equivalent corrosion protection system as specified in BDM 5.1.2.

   These overlays were first used by WSDOT in 1979 and have an expected life between 20-40 years. There are more than 600 bridges with concrete overlays as of 2010. This is the preferred overlay system for deck rehabilitation that provides long-term deck protection and a durable wearing surface. In construction, the existing bridge deck is hydromilled ½″ prior to placing the 1.5″ overlay. This requires the grade to be raised 1″. For decks with existing concrete overlays, the existing overlay should be removed entirely.

   The modified concrete overlay specifications allow a contractor to choose between a latex, microsilica or fly ash modified mix design. Construction requires a deck temperature between 45°F–75°F with a wind speed less than 10 mph. Traffic control can be significant since the time to cure the concrete overlay alone is 42 hours.

2. **¾″ Polyester Polymer Concrete Overlay**

   These overlays were first used by WSDOT in 1989 and have an expected life between 20-40 years with more than 30 overlay as of 2021. This type of overlay is a polymer-based concrete that uses specialized equipment to place and finish. Construction requires dry weather with temperatures above 50°F and normally cures within 4 hours. A polyester concrete overlay may be specified in special cases when rapid construction is needed. Due to its lower modulus of elasticity and compressive strength than Portland cement based concrete, polyester concrete may not be a good candidate to replace large volumes of structural concrete, such as in decks and edge beams.

3. **3″ Concrete Class 4000D Overlay**

   These are nominally 3" thick concrete overlays placed after the existing bridge deck is scarified down to the top mat of bridge deck reinforcement. The depth of placement may be reduced for structural reasons such as in non-redundant deck overhangs, but the minimum thickness shall be 2" to accommodate the larger aggregate in Concrete Class 4000D.

   These overlays were first used in the mid 2010's on bridges that had previously received a modified concrete overlay. Second generation modified concrete overlays were seen to suffer from debonding, which may have been caused by microcracks in the substrate concrete caused by rotary milling machines and other percussive equipment used to scarify bridge decks in the past. The increased depth of removal using hydromilling equipment ensures the removal of bruised/microcracked concrete in the existing bridge deck.

4. **Historical Overlay Systems**

   A rapid set latex modified concrete (RSLMC) overlay uses special cement manufactured by the CTS Company based in California. RSLMC is mixed in a mobile mixing truck and applied like a regular concrete overlay. The first RSLMC overlay was applied to bridge 162/20 South Prairie Creek in 2002 under Contract No. 016395. Like polyester, this overlay cures in 4 hours and may be specified in special cases when rapid construction is needed.

   Thin polymer overlays are built up layers of a polymer material with aggregate broad cast by hand. The first thin overlay was placed in 1986 and after placing 25 overlays, they were discontinued in the late 1998 due to poor performance.

Figure 5.7.4-2 Type 2 Protection System

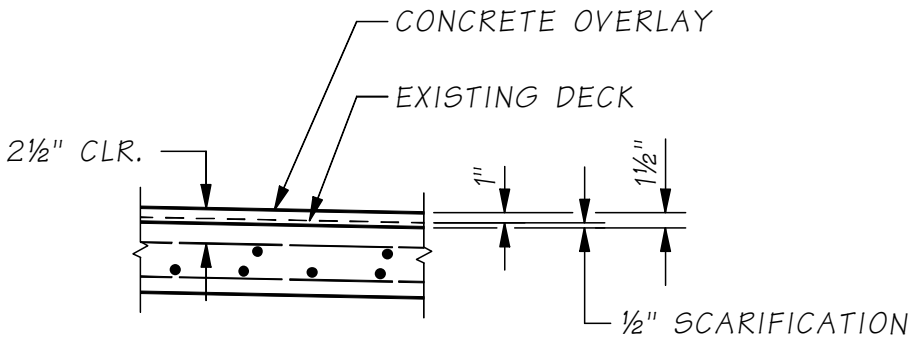

5.7.4.A.3 *Type 3 Protection System*

This protection system consists of a Hot Mixed Asphalt (HMA) overlay wearing surface and requires the use of a waterproofing membrane, see Figure 5.7.4-3. HMA overlays should be applied over decks with 2" of concrete cover and epoxy-coated or other corrosion resistant reinforcing. HMA overlays provide a lower level of deck protection and introduce the risk of damage by planing equipment during resurfacing. Asphalt overlays with a membrane were first used on a WSDOT bridges in 1971 and about ⅓ of WSDOT structures have HMA. The bridge HMA has an expected life equal to the roadway HMA when properly constructed.

Waterproof membranes are required with the HMA overlay. Unlike roadway surfaces, the HMA material collects and traps water carrying salts and oxygen at the concrete surface deck. This is additional stress to an epoxy protection system or a bare deck and requires a membrane to mitigate the penetration of salts and oxygen to the structural reinforcement and cement paste. See *Standard Specifications* for more information on waterproof membranes.

HMA overlays may be used in addition to the Type 1 Protection System for new bridges where it is desired to match roadway pavement materials or for simple span WFDG girder bridges connected with UHPC. New bridge designs using HMA shall have a minimum depth of overlay of 0.25' (3″) to allow future resurfacing contracts to remove and replace 0.15′ HMA without damaging the concrete cover or the waterproof membrane. Plan sheet references to the depth of HMA shall be in feet, since this is customary for the paving industry.

Existing structures may apply an HMA overlay in accordance with the Bridge Paving Policies, Section 5.7.5.

Standard Plan A-40.20.00, Bridge Transverse Joints Seals for HMA provides some standard details for saw cutting small relief joints in HMA paving. Saw cut joints can have a longer life, better ride, and help seal the joint at a location known to crack and may be used for small bridge expansion joints less than 1 inch.

Figure 5.7.4-3 Type 3 Protection System

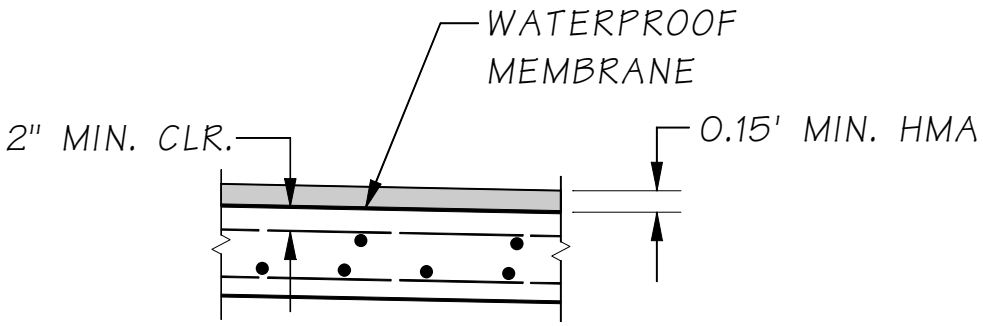

5.7.4.A.4 *Type 4 Protection System*

This system is a minimum 5″ cast-in-place (CIP) topping with at least one mat of epoxy coated reinforcement, see Figure 5.7.4-4. This system eliminates girder wheel distribution problems, provides a quality protection system and provides a durable wearing surface. It is commonly used on slab girder bridges that transfer shear forces between girders with minimal flexure.

1. A minimum concrete cover of 1″ applies to the top mat of the top of the prestressed member.
2. Epoxy coating the prestressed member top mat reinforcement is not required.

Figure 5.7.4-4 Deck Protection System 4

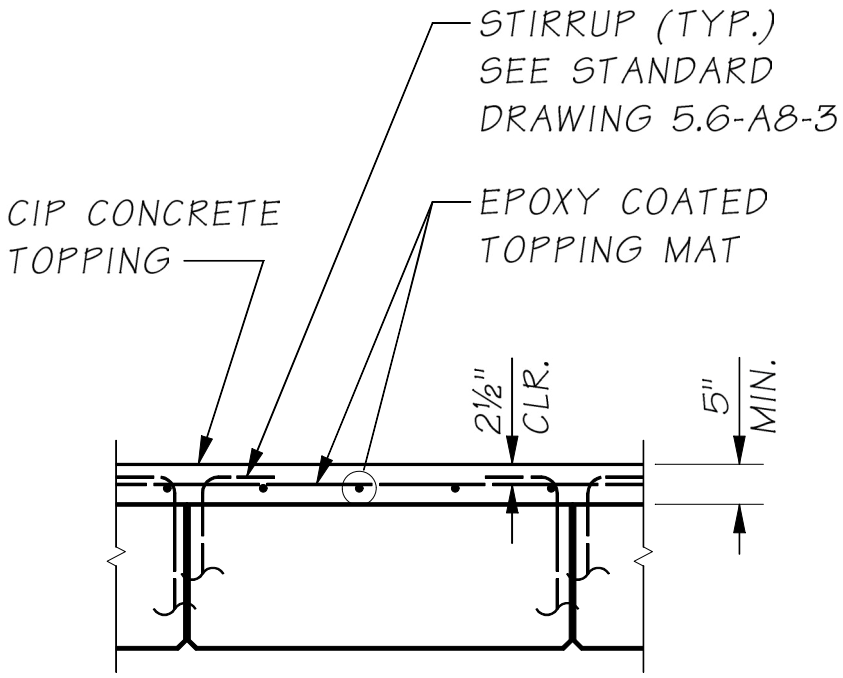

5.7.4.A.5 *Type 5 Protection System*

This system requires a layered, 3″ concrete cover for double protection, see Figure 5.7.4-5. All segmentally constructed bridges shall use this system to protect construction joints and provide minor grade adjustments during construction. Segmental bridges and bridge decks with transverse post-tensioning in the deck shall use this system since deck rehabilitation due to premature deterioration is very costly. The 3″ cover consists of the following:

1. Both the top and bottom mat of deck reinforcing are epoxy-coated or equivalent corrosion protection system as specified in BDM Section 5.1.2. Girder/web stirrups and horizontal shear reinforcement does not require epoxy-coating.
2. The deck is constructed with a 1¾″ concrete cover.
3. The deck is then scarified ¼″ prior to the placement of a modified concrete overlay. Scarification shall be diamond grinding to preserve the integrity of the segmental deck and joints.
4. A 1½″ modified concrete overlay is placed as a wearing surface.

Figure 5.7.4-5 Type 5 Protection System

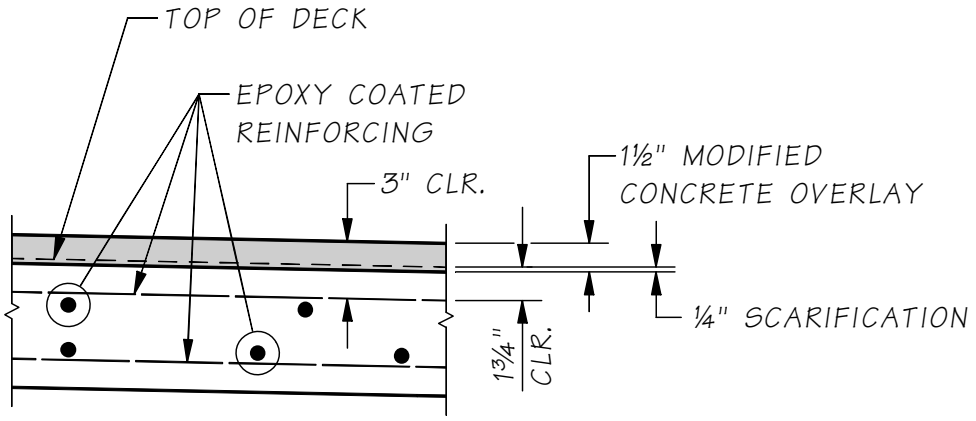

5.7.4.B Existing Bridge Deck Widening

New deck rebar shall match the existing top layer. This provides steel at a uniform depth which is important when removing concrete during future rehab work. Bridges prior to the mid 1980's used 1½″ concrete cover. New and widened decks using a Type 1 Protection System shall have 2½″ cover.

When an existing bridge is widened, the existing concrete or asphalt deck may require resurfacing. WSDOT is forced to rehab concrete decks based on the condition of the existing deck or concrete overlay. If a deck or overlay warrants rehabilitation, then the existing structure shall be resurfaced and included in the widening project.

By applying the stated design criteria, the following policies shall apply to bridge widening projects which may require special traffic closures for the bridge work.

5.7.4.B.1 *Rebar*

The deck or cast-in-place slab of the new widened portion shall use the Type 1 Protection System, even though the existing structure has bare rebar. The top mat of new rebar shall match the height of existing rebar. Variations in deck thickness are to be obtained by lowering the bottom of the deck or slab.

5.7.4.B.2 *Concrete Decks*

If the existing deck is original concrete without a concrete overlay, the new deck shall have a Type 1 Protection System and the existing deck shall have a 1½″ concrete overlay or Type 2 Protection System. This matches the rebar height and provides a concrete cover of 2.5″ on both the new and old structure.

If the existing deck has a concrete overlay, the new deck shall have a Type 1 Protection System and the existing overlay shall be replaced if the deck deterioration is greater than 1 percent of the deck area.

5.7.4.B.3 *Concrete Overlays*

It is preferred to place a concrete overlay from curb to curb. If this is problematic for traffic control, then Plans shall provide at least a 6″ offset lap where the overlay construction joint will not match the deck construction joint.

5.7.4.B.4 *HMA Overlays*

The depth of existing asphalt must be field measured and shown on the bridge plans. This mitigates damage of the existing structure due to removal operations and reveals other design problems such as: improper joint height, buried construction problems, excessive weight, or roadway grade transitions adjustments due to drainage.

The new deck must meet the rebar and cover criteria stated above for Concrete Decks and deck tinning is not required. Type 3 Protection system shall be used and HMA shall be placed to provide a minimum 0.15′ or the optimum 0.25′.

5.7.4.B.5 *Small Width Widening*

With approval of the WSDOT Bridge Management Unit, smaller width widening design that has traffic on the new construction can match existing 1½″ concrete cover for the widened portion, if the existing deck deterioration is less than 1 percent of the deck area.

5.7.4.B.6 *Expansion Joints*

All joints shall be in good condition and water tight for the existing bridge and the newly constructed widened portion. The following joint criteria applies:

1. The existing expansion joint shall be replaced if:
   - More than 10 percent of the length of a joint has repairs within 1′-0″ of the joint.
   - Part of a joint is missing.
   - The joint is a non-standard joint system placed by maintenance.
2. All existing joint seals shall be replaced.
3. When existing steel joints are not replaced in the project, the new joint shall be the same type and manufacturer as the existing steel joint.
4. Steel joints shall have no more than one splice and the splice shall be at a lane line. Modular joints shall not have any splices.

5.7.4.C Bridge Deck Overlays

Bridge deck overlays are an important means to preserve decks and the underlying structure. Because bridge decks are directly exposed to live loading and the environment, most bridges are expected to need resurfacing of some sort during their service life. The need for an overlay or other resurfacing can be triggered by (among other reasons) excessive wear, rutting, delamination, spalling, patching, corrosion and/or chloride exposure.

For rehabilitation jobs, the type of overlay or resurfacing specified in the Bridge Condition Report will depend on the level of deterioration in the bridge deck, the nature of previous deck rehabilitation efforts, deck expansion joint type, approach roadway material, and the impact of lane closures during construction.

The portion of overlays placed above the top of the original deck are typically not considered part of a structural deck due to the lack of reinforcing and risk of delamination. Portland cement-based overlay materials such as modified concrete and Concrete Class 4000D may be considered as structural concrete when they replace original deck concrete, such as in patches, edge beams, diaphragms and joint headers.

5.7.4.C.1 *Surface Preparation*

Overlays are typically bonded to the underlying deck through a mechanical and/or chemical means. Adequate surface preparation is essential for the long-term durability of overlays.

For Portland cement-based concrete overlays, surface preparation requires the use of hydro-demolition or small hand tool roughening of the concrete substrate. These methods ensure a high degree of mechanical roughness as well as the removal of weakened concrete at the interface zone. These methods also minimize the risk of damage to reinforcing bars when the exposure of reinforcing bars is possible or expected.

Polyester concrete and other lower modulus materials typically only require shot blasting and the use of a chemical primer. Hydro-demolition is typically not used for polyester concrete overlays because polyester concrete is sensitive to water.

5.7.4.C.2 *Existing Structure Evaluation*

For deck rehabilitation projects, longitudinal and transverse deck reinforcement shall be evaluated for the effects of deck concrete removal which impact the load carrying capacity of the superstructure, including areas where the deck is used to resist tension, compression and flexural forces.

Hydro-demolition machines have the potential to remove more depth than intended due to poor calibration or concrete/surface condition. Concrete removal may also expose areas of poorly consolidated or delaminated concrete. Because of this potential, there is risk of section loss to the deck and superstructure during construction. Also, if reinforcing bars become debonded over a significant length, they could lose effectiveness in resisting dead and live load tension or flexure. Designers should consider the risk of inelastic redistribution of dead load.

Limitations shall be placed in the contract to describe removal sequencing and limits as determined by analysis. Limitations typically include requiring the work to be performed in longitudinal strips, which limits the width of potential section loss in the structure. Limits can also be placed on the length of section loss in the superstructure allowed during hydro demolition before a concrete patch (Type 2 Deck Repair) needs to be placed. Further, the weight and placement of construction load equipment may need limits. When establishing the sequence and limits of removal work, designers should consider the following:

- Condition of the deck
- Superstructure type and level of ductility
- Locked-in forces carried by the deck
- Girder/web spacing and redundancy
- Scarification depth relative to deck and concrete cover thickness
- Size, location and development length of deck reinforcing bars
- The presence of prestressing tendons
- Likely methods of concrete delivery and placement
- Proximity of adjacent traffic to work on the bridge
- Construction schedule and other traffic control constraints

While structure needs are critical, designers should consider that overly restrictive limits on the work can significantly extend the duration of the work. In some cases, traffic may need to be completely restricted or detoured.

5.7.4.C.3 *Deck Repair*

Deck repair work is often necessary after scarification to restore the structural integrity of the underlying deck. Shallow repairs below the scarification depth (Type 1 Deck Repair) can often be filled with the overlay material as the overlay is being placed. In the case of deeper repairs, concrete patches should be placed and cured prior to placing of the overlay (Type 2 Deck Repair). Placing deeper repair patches prior to the overlay material avoids the risk of plastic settlement and cracking that can arise when there is a sudden change in the depth of placed concrete. Some Type 2 Deck Repair may also need to be performed prior to the completion of scarification in order to avoid the loss of bridge section or strength.

In order to maintain structural integrity, the material for Type 2 Deck Repair should typically be a structural concrete with a strength and modulus similar to the original deck. This could include Concrete Class M, Modified Concrete, Concrete Class 4000D, or Concrete Class 4000. However, polyester concrete is often used for polyester concrete overlays in order to accelerate the schedule and avoid introducing moisture at the overlay bond zone.

5.7.5 HMA Paving on Bridge Decks

5.7.5.A Design Responsibilities

Bridge paving design options are bridge specific based on the existing conditions and previous paving. All designers, whether WSDOT Bridge and Structures Office, Region PEO, or outside consultants, shall have the following documents in-hand before beginning any bridge deck paving design:

1. *Bridge Condition Report* (BCR) as developed by the WSDOT Bridge and Structures Office for each bridge within the project limits. The BCR specifies the known bridge deck paving conditions present at the bridge, and specifies the paving depths and bridge deck repair requirements as determined by the WSDOT State Bridge Asset Management unit.
2. *Project Resurfacing Report* as developed by the Region Materials Laboratory. The Region PEO is responsible for field evaluation of the current surfacing condition and the current depth of surfacing as confirmed by cores taken by the Region Materials Laboratory. Surfacing depths vary from bridge to bridge and vary within the same bridge deck, so multiple cores at a bridge are necessary to establish a valid current baseline.

Discrepancies in paving depths specified at each bridge between the Project Resurfacing Report and the BCR shall be discussed by the Region PEO and the Bridge Asset Management unit to reach a consensus prior to continuing with bridge deck paving design.

Bridge deck paving PS&E for bridges in HMA paving projects may be prepared in the Region by the Design PEO provided all of the following conditions are satisfied:

1. A minimum of 0.25 feet of competent HMA is present on the bridge deck. Milling operations will leave a minimum of 0.10 feet of HMA on the bridge deck. Filling operations will not add more than 0.15 feet of HMA. Bridge deck repair and a waterproof membrane are not planned.

2. No bridge expansion joint or header repair or replacement work is required.
3. The bridges have an operating load rating equal or greater than 45 tons. Operating ratings are shown on the Bridge Engineering Information System (BEIST) summary sheet: http://beist/InventoryAndRepair/Inventory/BRIDGE
4. The BCR indicates paving weight restrictions are not required for the structure.

Bridge deck paving PS&E for bridges not conforming to all of the criteria above will be prepared by the WSDOT Bridge and Structures Office.

Region is responsible for field evaluation of paving condition and the depth of asphalt provided by the last paving contract. Asphalt depths can vary on the concrete deck and from bridge to bridge. In most cases, asphalt depth measurements at the fog line on the four corners of the deck are sufficient to establish a design depth for contracts. The Bridge Asset Manager shall be informed of the measurements. Paving shown in the Plans would use an approximate or averaged value of the measurements. Some situations may require a Plan Detail showing how the depth varies to assist the planing operations.

5.7.5.B Design Considerations

An HMA wearing surface is a recognized method to manage concrete rutting, improve the ride on HMA roadways, and is a form of deck protection. Bridges may or may not have the capacity to carry the additional dead load of an asphalt wearing surface.

The following bridge paving policies have been developed with the concurrence of WSDOT Pavement Managers to establish bridge HMA Design options available for state managed structures.

5.7.5.B.1 *HMA Depth*

HMA thickness shall be 0.25′ or 3″. A greater depth may be allowed if structurally acceptable, such as structures with ballast or as approved by the WSDOT Load Rating Engineer. The thickness of HMA shall not reduce the exposed barrier height below minimum requirements. Paving designs that increase the HMA more than 3″ require a new Load Rating analysis and shall be submitted to the WSDOT Bridge Preservation office Load Rating Engineer.

1. Concrete bridge decks with more than 0.21′ HMA may be exempted from paving restrictions for mill/fill HMA design.
2. Prestressed concrete deck girders and slabs with less than 0.25′ HMA require paving restrictions to avoid planing the supporting structure.
3. A paving grade change will be required when more than 0.25′ of asphalt exists on a structure in order to reduce the weight on the structure and meet acceptable rail height standards.

5.7.5.B.2 *Grade Controlled Structures*

For bridge decks with an HMA thickness less than 0.25′ and the grade is limited by bridge joint height or other considerations, resurfacing must provide full depth removal of HMA or mill/fill the minimum 0.12′.

5.7.5.B.3 *Grade Transitions*

When raising or lowering the HMA grade profile on/off or under the bridge, the maximum rate of change or slope shall be 1″/40′ (1′/500′) as shown in Standard Plan A-60.30-00, even if this means extending the project limits. Incorrect transitions are the cause of many "bumps at the bridge" and create an undesired increase in truck loading. The following items should be considered when transitioning a roadway grade:

1. Previous HMA overlays that raised the grade can significantly increase the minimum transition length.
2. Drainage considerations may require longer transitions or should plane to existing catch basins.
3. Mainline paving that raises the grade under a bridge must verify Vertical Clearance remains in conformance to current Vertical Clearance requirements. Mill/Fill of the roadway at the bridge is generally desired unless lowering the grade is required. See *Design Manual* Section 720.04 Bridge Site Design Elements, (5) Vertical Clearances, (c) Minimum Clearance for Existing Structures, 1. Bridge Over a Roadway.

5.7.5.B.4 *Full Removal*

Full depth removal and replacement of the HMA is always an alternate resurfacing design option. Full depth removal may be required by the Region Pavement Manager or the Bridge Office due to poor condition of the HMA or bridge deck. Bridge Deck Repair and Membrane Waterproofing (Deck Seal) standard pay items are required for this option and the Bridge Office will provide engineering estimates of the quantity (SF) and cost for both.

1. Bridge deck repair will be required when the HMA is removed and the concrete is exposed for deck inspection. Chain drag testing is completed and based on the results, the contractor is directed to fix the quantity of deck repairs. The chain drag results are sent to the WSDOT State Bridge Asset Manager and used by the WSDOT Bridge Office to monitor the condition of the concrete deck and determine when the deck needs rehabilitation or replacement.
2. Membrane Waterproofing (Deck Seal) is Standard Item 4455 and will be required for all HMA bridge decks, except when the following conditions are met.
   A. HMA placed on a deck that has a Modified Concrete Overlay which acts like a membrane.
   B. The bridge is on the P2 replacement list or deck rehabilitation scheduled within the next 4 years or two bienniums.

5.7.5.B.5 *Bare Deck HMA*

Paving projects may place HMA on a bare concrete deck, with concurrence of the WSDOT Bridge Asset Manager, if the bridge is on an HMA route and one of the following conditions apply.

1. Rutting on the concrete deck is ½″ or more.
2. The Region prefers to simplify paving construction or improve the smoothness at the bridge.

When the concrete bridge deck does not have asphalt on the surface, Region Design should contact the Region Materials lab and have a Chain Drag Report completed and forwarded to the Bridge Asset Manager during design to establish the Bridge Deck Repair quantities for the project. Pavement Design should then contact Region Bridge Maintenance to request the repairs be completed prior to contract; or the repairs may be included in the paving contract. Small amounts of Bridge Deck Repair have an expensive unit cost by contract during paving operations.

5.7.5.B.6 *Bridge Transverse Joint Seals*

Saw cut pavement joints shown in Standard Plan A-40.20-04 perform better and help prevent water problems at the abutment or in the roadway. Typical cracking locations where pavement joint seals are required: End of the bridge; End of the approach slab; or joints on the deck. However, if Pavement Designers do not see cracking at the ends of the bridge, then sawcut joints may be omitted for these locations. HQ Program Management has determined this work is "incidental" to P1 by definition and should be included in a P1 paving project and use Standard Item 6517. The following summarizes the intended application of the Details in Standard Plan A-40.20-04.

1. **Detail 1 & 2**
   Applies where HMA on the bridge surface abuts an HMA roadway.
2. **Detail 3 & 4**
   Applies where concrete bridge surface abuts an HMA roadway.
3. **Detail 5, 6 & 7**
   Applies at open concrete joints.
4. **Detail 11**
   Applies to longitudinal staging joints.
5. **Detail 12**
   Applies to pavement repair at pavement seats.

5.7.5.B.7 *Bituminous Surface Treatments (BST)*

Bituminous Surface Treatments (or chip seals) ½″ thick may be applied to bridge decks with HMA under the following conditions.

1. Plans must identify or list all structures bridges included or expected within project limits and identify bridge expansion joint systems to be protected.
2. BST is not allowed on weight restricted or posted bridges.
3. Planing will be required for structures at the maximum asphalt design depth or the grade is limited.

BSTs are generally not a problem if the structure is not grade limited for structural reasons. BCRs will specify a ½″ chip seal paving depth of 0.03′ for BST Design to be consistent with Washington State Pavement Management System. Plans should indicate ½″ chip seal to be consistent with *Standard Specifications* and standard pay items.

5.7.5.B.8 *Culverts and Other Structures*

Culverts or structures with significant fill and do not have rail posts attached to the structure generally will not have paving limitations. Culverts and structures with HMA pavement applied directly to the structure have bridge paving design limits.

5.7.5.B.9 *Paving Equipment Load Restrictions*

All structures shall be evaluated for their ability to carry the weight of HMA removal and HMA paving equipment. Modern HMA roadway paving equipment can be quite heavy, and typically does not conform to legal vehicle axle patterns. This is particularly true for material transfer vehicles (MTV's).

Each plan set shall include one plan sheet for HMA removal equipment load restrictions and one plan sheet for HMA paving equipment load restrictions. These limits should be selected to give the paving contractor the most flexibility to select equipment and achieve HMA compaction. In special cases for short span bridges where only one piece of equipment can occupy a span, piece weight limits may be specified by plan note.

Specified paving loads and configurations shall have an operating load rating factor greater than 1.0. An impact factor of 0.1 or greater shall be used. Vibratory methods of compaction shall not be allowed on bridges or other structures.

5.7.5.B.10 *Plans Preparation*

All WSDOT structures within the defined project limits must be evaluated for paving or Bituminous Surface Treatment (BST or chip seal). All bridges shall be identified in the Plans as "INCLUDED IN PROJECT" or "NOT INCLUDED" in accordance with *Plan Preparation Manual* Section 4 "Vicinity Map", paragraph (n). This applies to all state bridges including but not limited to:

1. Off the main line. Typical locations include bridges on ramps, frontage roads, or bridges out of right-of-way.
2. Bridges where the main line route crosses under the structure.
3. Bridges at the beginning and ending stations of the project. It is not necessary to include the bridge when it was recently resurfaced, but it should be included if incidental joint maintenance repairs are necessary.

A standard Microstation detail is available to simplify detailing of bridge paving in the Plans, see "SH_DT_RDSECBridgeDeckOverlay_Detail". The table format is copied from the BCR and allows the bridge paving design requirements to be listed in the table. All bridges within the limits of the project must be listed in the table to clarify which structures do not have paving and facilitate data logging for the Washington State Pavement Management System and the Bridge Office.

5.8 Cast-in-place Post-Tensioned Bridges

5.8.1 Design Parameters

5.8.1.A General

Post-tensioning is generally used for CIP construction and spliced prestressed concrete girders since pretensioning is generally practical only for fabricator-produced structural members. The FHWA *Post-tensioned Box Girder Bridge Manual*[17] is recommended as the guide for design. This manual discusses longitudinal post-tensioning of box girder webs and transverse post-tensioning of box girder slabs, but the methods apply equally well to other types of bridges. The following recommendations are intended to augment the FHWA Manual and the AASHTO *LRFD Bridge Design Specifications* and point out where current WSDOT practice departs from practices followed elsewhere.

Post-tensioning consists of installing steel tendons into a hollow duct in a structure after the concrete sections are cast. These tendons are usually anchored at each end of the structure and stressed to a design strength using a hydraulic jacking system. After the tendon has been stressed, the duct is typically filled with grout which bonds the tendon to the concrete section and prevents corrosion of the strand. The anchor heads are then encased in concrete to provide corrosion protection.

5.8.1.B Bridge Types

Post-tensioning has been used in various types of CIP bridges in Washington State with box girders predominating. The following are some examples of other bridge types:

Kitsap County, Contract 9788, Multi-Span Slab

Peninsula Drive, Contract 5898, Two- Span Box Girder

Covington Way to 180th Avenue SE, Contract 4919, Two-Span Box Girder Longitudinal Post-tensioning

Snohomish River Bridge, Contract 4444, Multi-Span Box Girder Longitudinal Post-tensioning

See Section 2.4.1 for structure type comparison of post-tensioned concrete box girder bridges to other structures. In general, a post-tensioned CIP bridge can have a smaller depth-to-span ratio than the same bridge with conventional reinforcement. This is an important advantage where minimum structure depth is desirable. However, structure depth must be deep enough to accommodate anchorages.

5.8.1.B.1 *Slab Bridge*

Structure depth can be quite shallow in the positive moment region when post-tensioning is combined with haunching in the negative moment region. However, post-tensioned CIP slabs are usually more expensive than when reinforced conventionally. Designers should proceed with caution when considering post-tensioned slab bridges because severe cracking in the decks of bridges of this type has occurred [21, 22, 23].

The Olalla Bridge (Contract 9202) could be reviewed as an example. This bridge has spans of 41.5′–50′–41.5′, a midspan structure depth of 15 inches, and some haunching at the piers.

5.8.1.B.2 *T-Beam Bridge*

This type of bridge, combined with tapered columns, can be structurally efficient and aesthetically pleasing, particularly when the spacing of the beams and the columns are the same. A T-Beam bridge can also be a good choice for a single-span simply-supported structure.

When equally spaced beams and columns are used in the design, the width of beam webs should generally be equal to the width of the supporting columns. See SR 16, Union Avenue O'Xings, for an example. Since longitudinal structural frame action predominates in this type of design, crossbeams at intermediate piers can be relatively small and the post-tensioning tendons can be placed side-by-side in the webs, resulting in an efficient center of gravity of steel line throughout. For other types of T-Beam bridges, the preferred solution may be smaller, more closely spaced beams and fewer, but larger pier elements. If this type of construction is used in a multispan, continuous bridge, the beam cross-section properties in the negative moment regions need to be considerably larger than the properties in the positive moment regions to resist compression.

Larger section properties can be obtained by gradually increasing the web thickness in the vicinity of intermediate piers or, if possible, by adding a fillet or haunch. The deck slab overhang over exterior webs should be roughly half the web spacing.

5.8.1.B.3 *Box Girder Bridge*

This type of bridge has been a popular choice in this state. The cost of a prestressed box girder bridge is practically the same as a conventionally-reinforced box girder bridge, however, longer spans and shallower depths are possible with prestressing.

The superstructure of multi-cell box girders shall be designed as a unit. The entire superstructure section (traffic barrier excluded) shall be considered when computing the section properties.

For criteria on distribution of live loads, see Section 3.9.4. All slender members subjected to compression must satisfy buckling criteria.

Web spacing should normally be 8 to 11 feet and the top slab overhang over exterior girders should be approximately half the girder spacing unless transverse post-tensioning is used. The apparent visual depth of box girder bridges can be reduced by sloping all or the lower portion of the exterior web. If the latter is done, the overall structure depth may have to be increased. Web thickness should be 12 inches minimum, but not less than required for shear, horizontal and vertical reinforcing, duct placement, and for concrete placing clearance. Providing 2½″ of clear cover expedites concrete placement and consolidation in the heavily congested regions adjacent to the post-tensioning ducts. Webs should be flared at anchorages. Top and bottom slab thickness should normally meet the requirements of Section 5.3.1.B, but not less than required by stress and specifications. Generally, the bottom slab would require thickening at the interior piers of continuous spans. This thickening should be accomplished by raising the top surface of the bottom slab at the maximum rate of ½″ per foot.

5.8.1.C Strand and Tendon Arrangements

The total number of strands selected should be at least the minimum required to meet the strength and service limit state requirements at all points. Check PT supplier literature for duct sizes and strand capacity. The most economical tendon selection will generally be the maximum duct size within the range than can be fit within the web. Commonly-

stocked anchorages for ½″ diameter strands include 9, 12, 19, 27, 31, and 37 strands. Commonly-stocked anchorages for 0.6″ diameter strands include 4, 7, 12, 19, 22, and 27 strands. The design should utilize commonly-stocked items. For example, a design requiring 66 strands per web would be most economically satisfied by three 22-strand tendons. A less economical choice would be four 17-strand tendons with 19-strand anchorages. The interior cross-sectional area of duct area shall be at least 2.5 times the net cross-sectional area of the prestressing steel. In the regions away from the end anchorages, the duct placement patterns indicated in Figures 5.8.1-1 through 5.8.1-3 shall be used.

Although post-tensioning steel normally takes precedence in a member, sufficient room must be provided for other essential mild steel and placement of concrete, in particular near diaphragms and cross-beams.

More prestress may be needed in certain portions of a continuous superstructure than elsewhere, and the designer may consider using separate short tendons in those portions of the spans only. However, the savings on prestressing steel possible with such an arrangement should be balanced against the difficulty involved in providing suitable anchoring points and sufficient room for jacking equipment at intermediate locations in the structure. For example, torsion in continuous, multigirder bridges on a curve can be counter-balanced by applying more prestress in the girders on the outside of the curve than in those on the inside of the curve.

Some systems offer couplers which make possible stage construction of long bridges. With such systems, forms can be constructed and concrete cast and stressed in a number of spans during stage 1, as determined by the designer. After stage 1 stressing, couplers can be added, steel installed, concrete cast and stressed in additional spans. To avoid local crushing of concrete and/or grout, the stress existing in the steel at the coupled end after stage 1 stressing shall not be exceeded during stage 2 stressing.

Figure 5.8.1-1 Tendon Placement Pattern for Box Girder Bridges

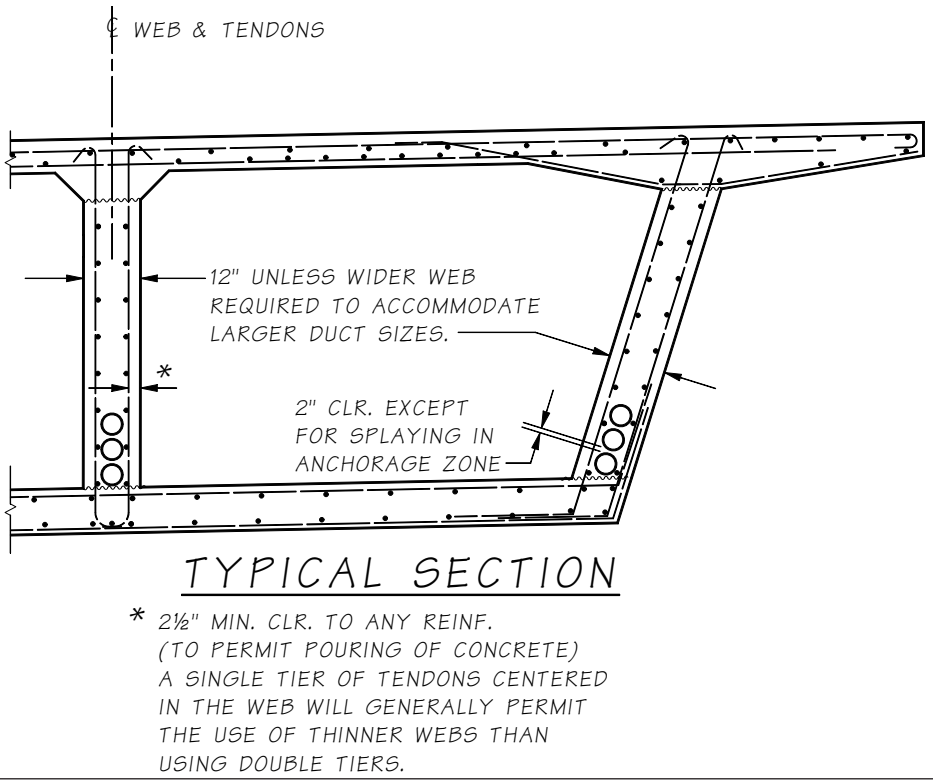

Figure 5.8.1-2 Tendon Placement Pattern for Box Girder Bridges

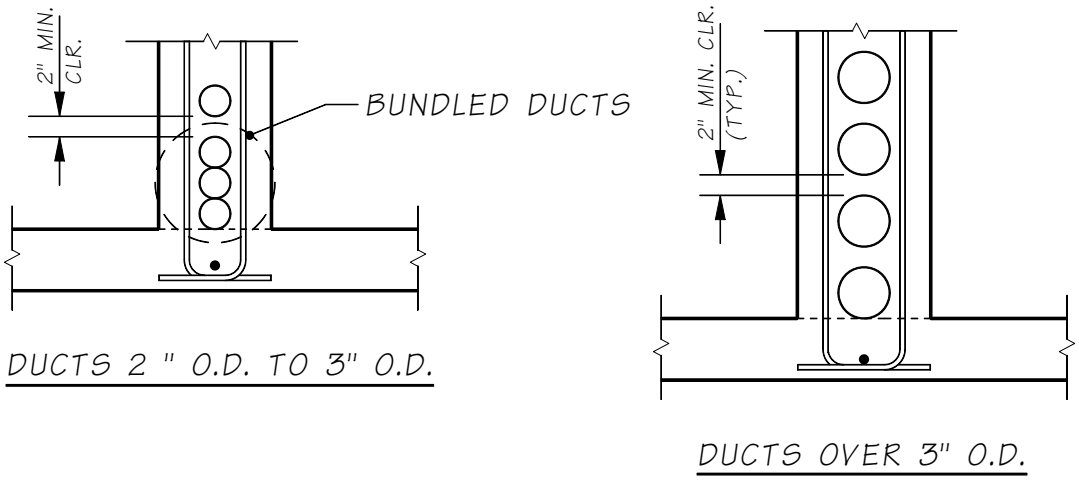

Figure 5.8.1-3 Tendon Placement Pattern for Flat Slab Bridges

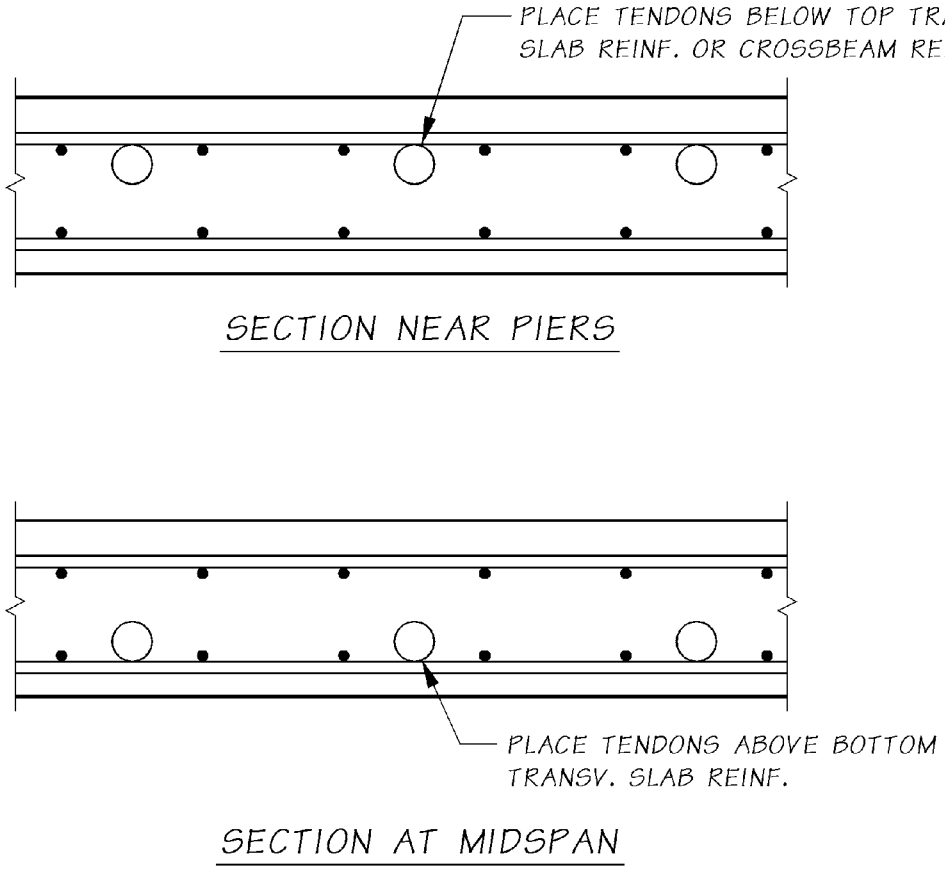

5.8.1.D Layout of Anchorages and End Blocks

Consult industry brochures and shop plans for recent bridges before laying out end blocks. To encourage bids from a wider range of suppliers, try to accommodate the large square bearing plate sizes common to several systems.

Sufficient room must be allowed inside the member for mild steel and concrete placement and outside the member for jacking equipment. The size of the anchorage block in the plane of the anchor plates shall be large enough to provide a minimum of 1″ clearance from the plate edge to any free edge.

The end block dimensions shall meet the requirements of the AASHTO *LRFD Specifications*. Note that in long-span box girder superstructures requiring large bearing pads, the end block should be somewhat wider than the bearing pad beneath to avoid subjecting the relatively thin bottom slab to high bearing stresses. When the piers of box girder or T-beam bridges are severely skewed, the layout of end blocks, bearing pads, and curtain walls at exterior girders become extremely difficult as shown in Figure 5.8.1-4. Note that if the exterior face of the exterior girder is in the same plane throughout its entire length, all the end block widening must be on the inside. To lessen the risk of tendon break-out through the side of a thin web, the end block shall be long enough to accommodate a horizontal tendon curve of 200 feet minimum radius. The radial component of force in a curved tendon is discussed in AASHTO LRFD Section 5.9.5.4.3.

Figure 5.8.1-4 Layout of Anchorages and End Blocks

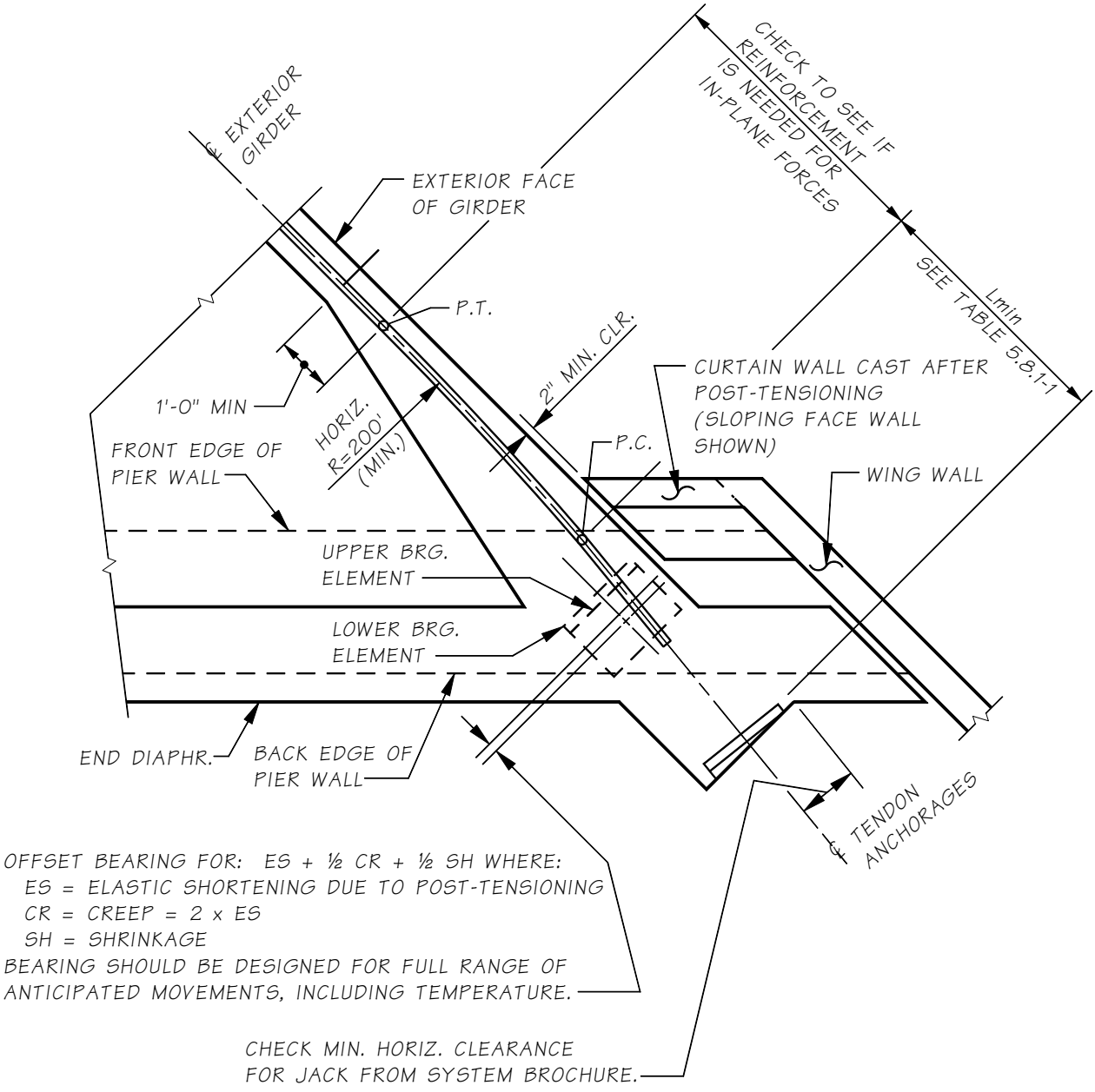

All post-tensioning anchorages in webs of box girder or multi stem superstructures shall be vertically aligned. Special Anchorage Devices may be used to avoid a staggered anchorage layout. If a staggered layout must be used, the plans shall be reviewed and approved by the WSDOT Bridge Design Engineer.

To ensure maximum anchorage efficiency, maximum fatigue life and prevention of strand breakage, a minimum tangent length at the anchorage is required to ensure that the strands enter the anchorage without kinking.

To prevent excessive friction loss and damage to the prestressing sheathings, adherence to the minimum tendon radii is required.

Table 5.8.1-1 and Figure 5.8.1-5 present the required minimum radius of curvature along with the required minimum tangent lengths at stressing anchorages. Deviation from these requirements needs the approval of the WSDOT Bridge Design Engineer.

Table 5.8.1-1 Minimum Tendon Radii and Tangent Length

Anchor Types	Radii, ft.	Tangent Length, ft.
½" Diameter Strand Tendons		
5-4	7.5	2.6
5-7	9.8	2.6
5-12	13.5	3.3
5-19	17.7	3.3
5-27	21.0	3.3
5-31	22.3	4.9
5-37	24.0	4.9
0.6" Diameter Strand Tendons		
6-4	10.6	3.3
6-7	12.8	3.3
6-12	16.4	3.3
6-19	20.7	4.9
6-22	22.6	4.9
6-31	26.4	4.9

Figure 5.8.1-5 Tangent Length and Tendon Radii

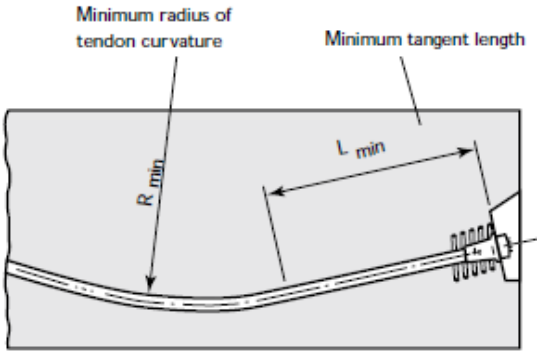

5.8.1.E Superstructure Shortening

Whenever members such as columns, crossbeams, and diaphragms are appreciably affected by post-tensioning of the main girders, those effects shall be included in the design. This will generally be true in structures containing rigid frame elements. For further discussion, see Section 2.6 of reference [17].

Past practice in the state of Washington regarding control of superstructure shortening in post-tensioned bridges with rigid piers can be illustrated by a few examples. Single-span bridges have been provided with a hinge at one pier and longitudinal slide bearings at the other pier. Two-span bridges have been detailed with longitudinal slide bearings at the end piers and a monolithic middle pier. On the six-span Evergreen Parkway Undercrossing (Bridge Number 101/510), the center pier (pier 4) was built monolithic with the superstructure, and all the other piers were constructed with slide bearings. After post-tensioning, the bearings at piers 3 and 5 were converted into fixed bearings to help resist large horizontal loads such as earthquakes.

Superstructures which are allowed to move longitudinally at certain piers are typically restrained against motion in the transverse direction at those piers. This can be accomplished with suitable transverse shear corbels or bearings allowing motion parallel to the bridge only. The casting length for box girder bridges shall be slightly longer than the actual bridge layout length to account for the elastic shortening of the concrete due to prestress.

5.8.1.F Effects of Curved Tendons

AASHTO LRFD Section 5.9.5.4.3 shall be used to consider the effects of curved tendons. In addition, confinement reinforcement shall be provided to confine the PT tendons when R_{in} is less than 800 feet or the effect of in-plane plus out-of-plane forces is greater than or equal to 10 k/ft:

$$\frac{P_u}{R_{in}} + \frac{P_u}{\pi R_{out}} \geq 10\,\frac{k}{ft} \qquad \textbf{(5.8.1-1)}$$

Where:

P_u = Factored tendon force = 1.2 P_{jack} (kips)

R_{in} = Radius of curvature of the tendon at the considered location causing in-plane force effects (typically horizontal) (ft)

R_{out} = Radius of curvature of the tendon at the considered location causing out-of-plane force effects (typically vertical) (ft)

Curved tendon confinement reinforcement, when required, shall be as shown in Figure 5.8.1-6. Spacing of the confinement reinforcement shall not exceed either 3.0 times the outside diameter of the duct or 18.0 inches.

Figure 5.8.1-6 Curved Tendon Confinement Reinforcement

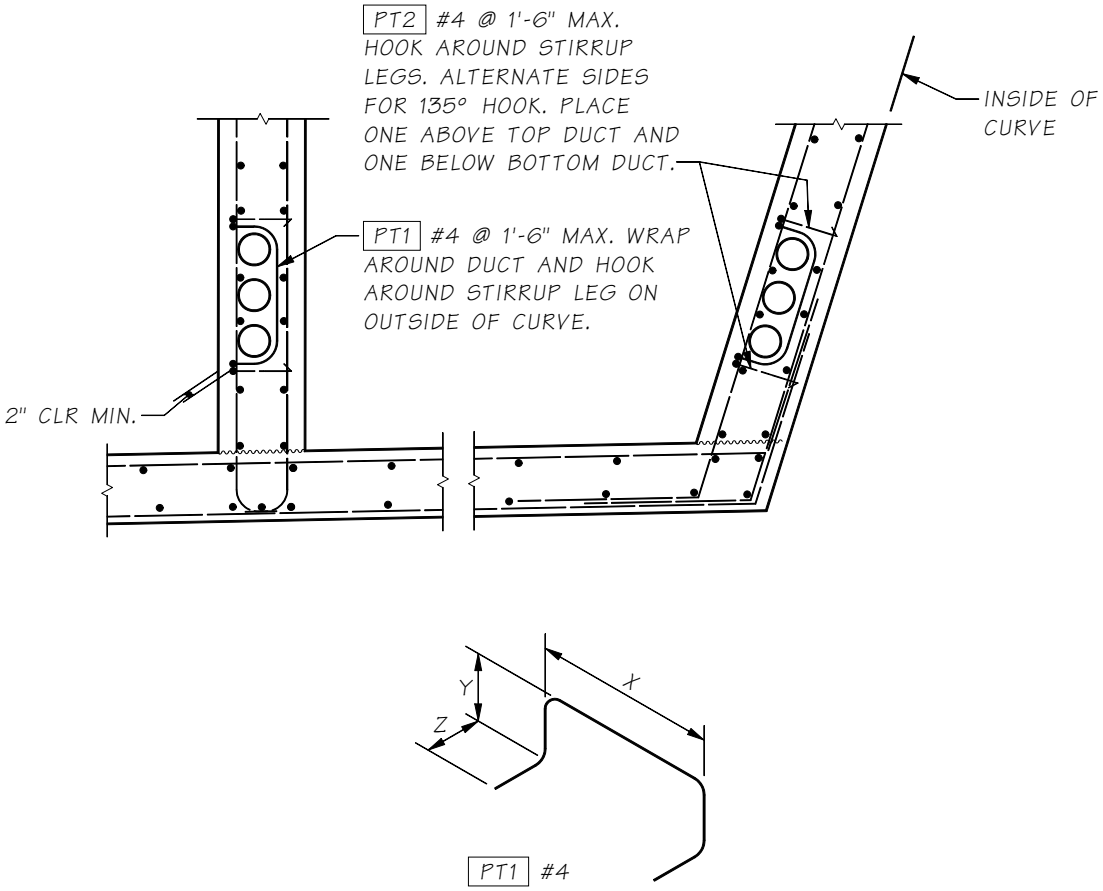

5.8.1.G Edge Tension Forces

If the centroid of all tendons is located outside of the kern of the section, spalling and longitudinal edge tension forces are induced. Evaluate in accordance with AASHTO LRFD Section 5.8.4.5.4.

5.8.2 Analysis

5.8.2.A General

The procedures outlined in Section 2.1 through 2.5 of reference [17] for computation of stress in single and multispan box girders can be followed for the analysis of T-beams and slab bridges as well.

STRUDL or CSIBridge is recommended for complex structures which are more accurately idealized as space frames. Examples are bridges with sharp curvature, varying superstructure width, severe skew, or slope-leg intermediate piers. An analysis method in Chapter 10 of reference[18] for continuous prestressed beams is particularly well adapted to the loading input format in STRUDL. In the method, the forces exerted by cables of parabolic or other configurations are converted into equivalent vertical linear or concentrated loads applied to members and joints of the superstructure. The vertical loads are considered positive when acting up toward the center of tendon curvature and negative when acting down toward the center of tendon curvature. Forces exerted by anchor plates at the cable ends are coded in as axial and vertical concentrated forces combined with a concentrated moment if the anchor plate group is eccentric. Since

the prestress force varies along the spans due to the effects of friction, the difference between the external forces applied at the end anchors at opposite ends of the bridge must be coded in at various points along the spans in order for the summation of horizontal forces to equal zero. With correct input, the effects of elastic shortening and secondary moments are properly reflected in all output, and the prestress moments printed out are the actual resultant (total) moments acting on the structure. For examples of the application of STRUDL to post-tensioning design, see the calculations for I-90 West Sunset Way Ramp and the STRUDL/CSI Bridge manuals.

5.8.2.B Section Properties

As in other types of bridges, the design normally begins with a preliminary estimate of the superstructure cross-section and the amount of prestress needed at points of maximum stress and at points of cross-section change. For box girders, see Figures 2-0 through 2-5 of Reference[17]. For T-beam and slab bridges, previous designs are a useful guide in making a good first choice.

For frame analysis, use the properties of the entire superstructure regardless of the type of bridge being designed. For stress analysis of slab bridges, calculate loads and steel requirements for a 1′ wide strip. For stress analysis of T-beam bridges, use the procedures outlined in the AASHTO *LRFD Specifications*.

Note that when different concrete strengths are used in different portions of the same member, the equivalent section properties shall be calculated in terms of either the stronger or weaker material. In general, the concrete strength shall be limited to the values indicated in Section 5.1.1.

5.8.2.C Preliminary Stress Check

In accordance with AASHTO, flexural stresses in prestressed members are calculated at service load levels. Shear stresses, stirrups, moment capacities vs. applied moments are calculated at ultimate load levels.

During preliminary design, the first objective should be to satisfy the stress limits in the concrete at the critical points in the structure with the chosen cross-section and amount of prestressing steel, then the requirements for shear stress, stirrups, and ultimate moment capacity can be readily met with minor or no modifications in the cross-section. For example, girder webs can be thickened locally near piers to reduce excessive shear stress.

In the AASHTO formulas for tensile stress limits in concrete, bonded reinforcement should be interpreted to mean bonded auxiliary (nonprestressed) reinforcement in conformity with Article 8.6 of the 2002 ACI *Code for Analysis and Design of Reinforced Concrete Bridge Structures*. The refined estimate for computing time-dependent losses in steel stress given in the code shall be used. To minimize concrete cracking and protect reinforcing steel against corrosion for bridges, the concrete stress limits under final conditions in the precompressed tensile zone shall be limited to zero in the top and bottom fibers as shown in Figure 5.8.2-1.

In all cases where tension is allowed in the concrete under initial or final conditions, extra mild steel (auxiliary reinforcement) shall be added to carry the total tension present. This steel can be computed as described in Section 9-5 of Reference[18].

Figure 5.8.2-1 Box Girder Stresses

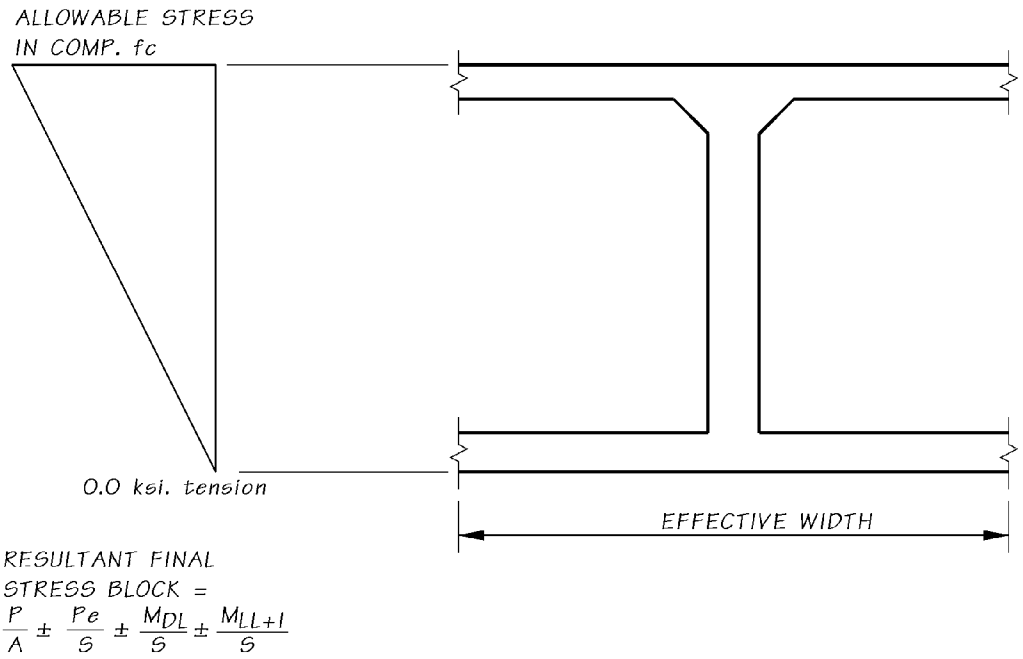

In case of overstress, try one or more of the following remedies: adjust tendon profiles, add or subtract prestress steel, thicken slabs, revise strength of concrete of top slab, add more short tendons locally, etc.

5.8.2.D Camber

The camber to be shown on the plans shall include the effect of both dead load and final prestress.

5.8.2.E Expansion Bearing Offsets

Figure 5.8.1-4 indicates expansion bearing offsets for the partial effects of elastic shortening, creep, and shrinkage. The initial offset shown is intended to result in minimal bearing eccentricity for the majority of the life of the structure. The bearing shall be designed for the full range of anticipated movements: *ES+CR+SH+TEMP* including load factors specified in AASHTO for deflections.

5.8.3 Post-tensioning

5.8.3.A Tendon Layout

After a preliminary estimate has been made of the concrete section and the amount of prestressing needed at points of maximum applied load, it may be advantageous in multispan bridges to draw a tendon profile to a convenient scale superimposed on a plot of the center of gravity of concrete (c.g.c.) line. The most efficient tendon profile from the standpoint of steel stress loss will normally be a series of rather long interconnected parabolas, but other configurations are possible. For continuous bridges with unequal span lengths, the tendon profile (eccentricity) shall be based on the span requirement. This results in an efficient post-tensioning design. The tendon profile and c.g.c. line plot is strongly recommended for superstructures of variable cross-section and/or multiple unsymmetrical span arrangements, but is not necessary for superstructures having

constant cross- section and symmetrical spans. The main advantages of the tendon profile and c.g.c. plot are:

1. The primary prestress moment curves (prestress force times distance from c.g.c. line to center of gravity of steel (c.g.s.) lines) at all points throughout all spans are quickly obtained from this plot and will be used to develop the secondary moment curves (if present) and, ultimately, to develop the resultant total prestress moment curve.
2. Possible conflicts between prestressing steel and mild steel near end regions, crossbeams, and diaphragms may become apparent.
3. Possible design revisions may be indicated. For example, camber in bridges with unequal spans can be balanced by adjusting tendon profiles.

   The tendon profile and c.g.c. line diagram shall also contain a sketch of how the end bearing plates or anchors are to be arranged at the ends of the bridge. Such a sketch can be useful in determining how large the end block in a girder bridge will have to be and how much space will be required for mild steel in the end region. In general, the arrangement of anchor plates should be the same as the arrangement of the ducts to which they belong to avoid problems with duct cross-overs and to keep end blocks of reasonable width.

5.8.3.B Prestress Losses

Prestress losses shall be as indicated in Section 5.1.4.

5.8.3.C Jacking End

Effective prestressing force in design of post-tensioned bridges depends on the accumulation of friction losses due to the horizontal and vertical curvature of the tendons as well as the curvature of the bridge. Although jacking ends of post-tensioned bridges is important to achieve more effective design, consideration shall be given to the practicality of jacking during construction. The following general stressing guidelines shall be considered in specifying jacking end of post-tensioned bridges.

- All simple or multiple span CIP or precast concrete bridges with total length of less than 350′ shall be stressed from one end only.
- All CIP or precast concrete post tensioned bridges with total length between 350′ to 600′. may be stressed from one end or both ends if greater friction losses due to vertical or horizontal curvature are justified by the designer.
- All CIP or precast concrete bridges with total length of greater than 600′ shall be stressed from both ends.

When stressing tendons from both ends or when alternating a single pull from both ends (half tendons pulled from one end with the other half pulled from the other end), all tendons shall be stressed on one end before all tendons are stressed on the opposite end.

Stressing at both ends shall preferably be done on alternate tendons, and need not be done simultaneously on the same tendon. In rare cases, tendons can be stressed from both ends to reduce large tendon losses but is undesirable due to worker safety issues and a reduction in stressing redundancy.

5.8.3.D Steel Stress Curve

Steel stresses may be plotted either as the actual values or as a percentage of the jacking stresses. A steel stress diagram for a typical two-span bridge is shown in Figure 5.8.3-1. Spans are symmetrical about pier 2 and the bridge is jacked from both ends.

Figure 5.8.3-1 Stress Diagram for a 2-Span PT Bridge

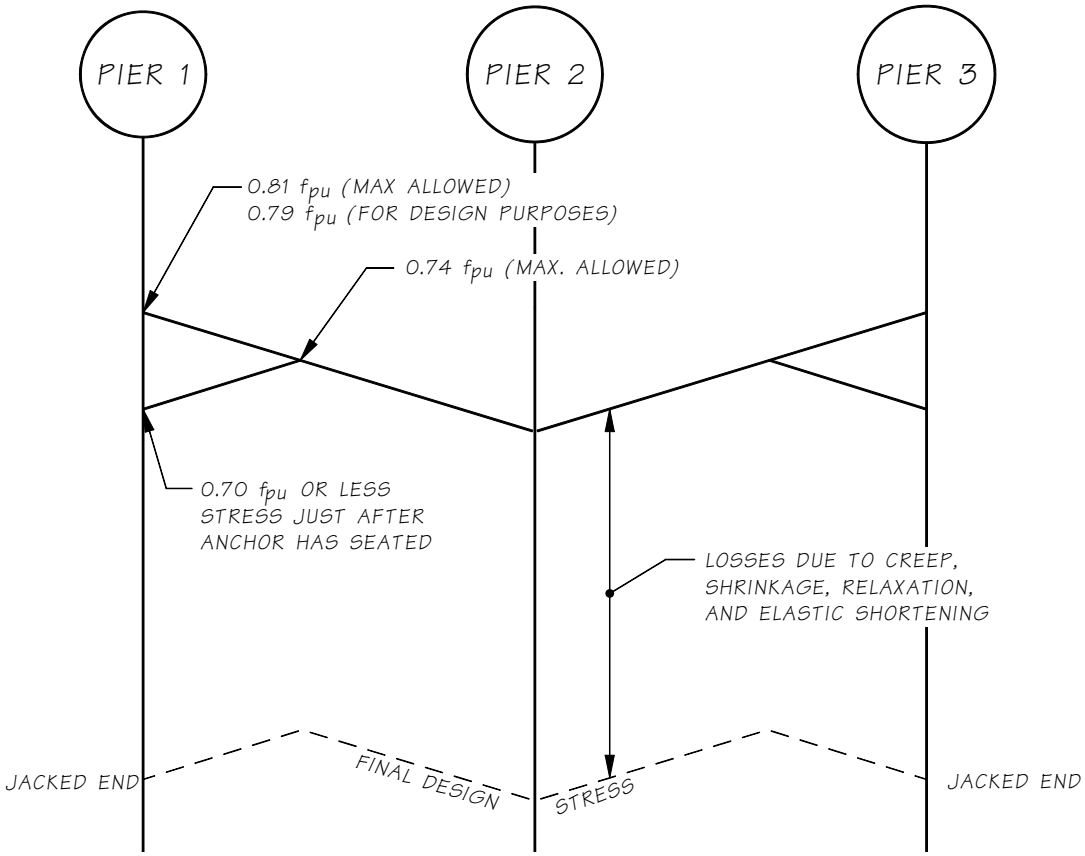

Accurate plotting of steel stress variation due to local curvature is normally not necessary, and straight lines between intersection points on the diagram as shown in Figure 5.8.3-1 are usually sufficient. When tendons are continuous through the length of the bridge, the stress for design purposes at the jacked end should be limited to $0.79f_{pu}$ or 213 ksi for 270 ksi low relaxation strands. This would permit the post-tensioning contractor to jack to the slightly higher value of $0.81f_{pu}$ for low relaxation strands as allowed by the AASHTO *LRFD Specifications* in case friction values encountered in the field turn out somewhat greater than the standard values used in design. Stress loss at jacked end shall be calculated from the assumed anchor set of $\frac{3}{8}''$, the normal slippage during anchoring in most systems. At the high points on the initial stress curve, the stress shall not exceed $0.74f_{pu}$ for low relaxation strands after seating of the anchorage. If these values are exceeded, the jacking stress can be lowered or alternately the specified amount of anchor set can be increased.

When the total tendon length (L) is less than the length of cable influenced by anchor set (x) and the friction loss is small, as in short straight tendons, the $0.70f_{pu}$ value at the anchorage immediately after anchor set governs. In these cases, the allowable jacking stress value at the anchorage cannot be used and a slightly lower value shall be specified.

In single-span, simply supported superstructures friction losses are so small that jacking from both ends is normally not warranted. In the longer multispan bridges where the

tendons experience greater friction losses, jacking from both ends will usually be necessary. Jacking at both ends need not be done simultaneously, since final results are virtually the same whether or not the jacking is simultaneous. If unsymmetrical two-span structures are to be jacked from one end only, the jacking must be done from the end of the longest span.

In the absence of experimental data, the friction coefficient for post-tensioning tendons in rigid and semi-rigid galvanized metal sheathing shall be taken as shown in Table 5.8.3-1. For tendon lengths greater than 1,000 feet, investigation is warranted on current field data of similar length bridges for appropriate values of μ. In the absence of experimental data, the friction coefficient for post-tensioning tendons in polyethylene ducts shall be taken as shown in the AASHTO *LRFD Bridge Design Specifications*.

Table 5.8.3-1 Friction Coefficients for Post-tensioning Tendons in Metal Ducts

Tendon Length	μ
500 ft or less	0.15
Over 500 ft to 750 ft	0.20
Over 750 ft to 1,000 ft	0.25

For tendon lengths greater than 1,000 feet, investigation is warranted on current field data of similar length bridges for appropriate values of μ.

5.8.3.E Flexural Stress in Concrete

Stress at service load levels in the top and bottom fibers of prestressed members shall be checked for at least two conditions that will occur in the lifetime of the members. The initial condition occurs just after the transfer of prestress when the concrete is relatively fresh and the member is carrying its own dead load. The final condition occurs after all the prestress losses when the concrete has gained its full ultimate strength and the member is carrying dead load and live load. For certain bridges, other intermediate loading conditions may have to be checked, such as when prestressing and falsework release are done in stages and when special construction loads have to be carried, etc. The concrete stresses shall be within the AASHTO *LRFD Specification* allowable except as amended in Section 5.2.1.

In single-span simply supported superstructures with parabolic tendon paths, flexural stresses at service load levels need to be investigated at the span midpoint where moments are maximum, at points where the cross-section changes, and near the span ends where shear stress is likely to be maximum (see Section 5.8.4 Shear). For tendon paths other than parabolic, flexural stress shall be investigated at other points in the span as well.

In multispan continuous superstructures, investigate flexural stress at points of maximum moment (in the negative moment region of box girders, check at the quarter point of the crossbeam), at points where the cross section changes, and at points where shear is likely to be maximum. Normally, mild steel should not be used to supplement the ultimate moment capacity. It may be necessary, however, to determine the partial temperature and shrinkage stresses that occur prior to post-tensioning and supply mild steel reinforcing for this condition.

In addition, maximum and minimum steel percentages and cracking moment shall be checked. See Section 2.3.8 of Reference [17].

5.8.3.F Prestress Moment Curves

5.8.3.F.1 *Single-Span Bridges, Simply Supported*

The primary prestress moment curve is developed by multiplying the initial steel stress curve ordinates by the area of prestressing steel times the eccentricity of steel from the center of gravity of the concrete section at every tenth point in the span. The primary prestress moment curve is not necessary for calculating concrete stresses in single-span simply supported bridges. Since there is no secondary prestress moment developed in the span of a single span, simply supported bridge which is free to shorten, the primary prestress moment curve is equal to the total prestress moment curve in the span. However, if the single span is rigidly framed to supporting piers, the effect of elastic shortening shall be calculated. The same would be true when unexpected high friction is developed in bearings during or after construction.

5.8.3.F.2 *Multispan Continuous Bridges*

Designers shall take into account the elastic shortening of the superstructure due to prestressing. To obtain the total prestress moment curve used to check concrete stresses, the primary and secondary prestress moment curves must be added algebraically at all points in the spans. As the secondary moment can have a large absolute value in some structures, it is very important to obtain the proper sign for this moment, or a serious error could result.

5.8.3.G Partial prestressing

Partial prestressing is not allowed in WSDOT bridge designs. However, mild reinforcement could be added to satisfy the ultimate flexural capacity under factored loads if the following requirements are satisfied:

1. Stress limits, as specified in this manual for Service-I and Service-III limit states, shall be satisfied with post-tensioning only. The zero-tension policy remains unchanged.
2. Additional mild reinforcement could be used if the ultimate flexural capacity cannot be met with the prestressing provided for service load combinations. The mild reinforcement is filling the gap between the service load and ultimate load requirements. This should be a very small amount of mild reinforcement since adequate post-tensioning is already provided to satisfy the service load requirement for dead load and live loads.
3. If mild reinforcement is added, the resistance factor for flexural design shall be adjusted in accordance with AASHTO LRFD Section 5.5.4.2 to account for the effect of partial prestressing. The section will still be considered uncracked and requirements for crack control, and side skin reinforcement do not apply.

5.8.4 Shear and Anchorages

5.8.4.A Shear Capacity

Concrete box girder and T-beam bridges with horizontal construction joints (which result from webs and slabs being cast at different times) shall be checked for both vertical and horizontal shear capacity. Generally, horizontal shear requirements will control the stirrup design.

Vertical concrete shear capacity for prestressed or post-tensioned structural members is calculated in accordance with AASHTO LRFD Section 5.7.3. Minimum stirrup area and maximum stirrup spacing are subject to the limitations presented in AASHTO LRFD Sections 5.7.2.5 and 5.7.2.6. For further explanation, refer to Section 11.4 of the ACI 318-02 *Building Code Requirements for Reinforced Concrete and Commentary*. Chapter 27 of Notes on ACI 318-02 Building Code Requirements for Reinforced Concrete with Design Applications presents two excellent example problems for vertical shear design.

5.8.4.B Horizontal Shear

Horizontal shear stress acts over the contact area between two interconnected surfaces of a composite structural member. AASHTO LRFD Section 5.7.4 shall be used for shear-friction design.

5.8.4.C End Block Stresses

The highly concentrated forces at the end anchorages cause bursting and spalling stresses in the concrete which must be resisted by reinforcement. For a better understanding of this subject, see Chapter 7 of Reference[18 and 19], and Section 2.82 of Reference[17].

Note that the procedures for computing horizontal bursting and spalling steel in the slabs of box girders and T-beams are similar to those required for computing vertical steel in girder webs, except that the slab steel is figured in a horizontal instead of a vertical plane. In box girders, this slab steel should be placed half in the top slab and half in the bottom slab. The anchorage zones of slab bridges will require vertical stirrups as well as additional horizontal transverse bars extending across the width of the bridge. The horizontal spalling and bursting steel in slab bridges shall be placed half in a top layer and half in a bottom layer.

5.8.5 Temperature Effects

Most specifications for massive bridges call for a verification of stresses under uniform temperature changes of the total bridge superstructure. Stresses due to temperature unevenly distributed within the cross-section are not generally verified. In reality, however, considerable temperature gradients are set up within the cross-section of superstructures. Such temperature differences are mostly of a very complex nature, depending on the type of cross-section and direction of solar radiation [20].

Solar radiation produces uniform heating of the upper surface of a bridge superstructure which is greater than that of the lower surface. An inverse temperature gradient with higher temperatures at the lower surface occurs rarely and involves much smaller temperature differences. In statically indeterminate continuous bridge beams, a temperature rise at the upper surface produces positive flexural moments which cause tensile stresses in the bottom fibers. When the temperature gradient is constant over the entire length of a continuous beam superstructure, positive flexural moments are induced in all spans. These moments are of equal constant magnitude in the interior spans and decrease linearly to zero in the end spans. The most critical zones are those which have the lowest compressive stress reserve in the bottom fibers under prestress plus dead load. Normally, these are the zones near the interior supports where additional tensile stresses develop in the bottom fibers due to

- A concentrated support reaction, and
- Insufficient curvature of prestressed reinforcement.

Studies have shown that temperature is the most important tension-producing factor, especially in two-span continuous beams in the vicinity of intermediate supports, even when the temperature difference is only 10°C between the deck and bottom of the beam. In practice, a box girder can exhibit a ΔT=30°C. The zone at a distance of about 0.3 to 2.0*d* on either side of the intermediate support proved to be particularly crack-prone.

Uniform temperature loads (TU) as well thermal gradients loads (TG) shall be considered in design.

5.8.6 Construction

5.8.6.A General

Construction plans for conventional post-tensioned box girder bridges include two different sets of drawings. The first set (contract plans) is prepared by the design engineer and the second set (shop plans) is prepared by the post-tensioning materials supplier (contractor).

5.8.6.B Contract Plans

The contract plans shall be prepared to accommodate several post-tensioning systems, so only prestressing forces and eccentricity should be detailed. The concrete sections shall be detailed so that available systems can be installed. Design the thickness of webs and flanges to facilitate concrete placement. Generally, web thickness for post-tensioned bridges shall be as described in Section 5.8.1.B. See Section 5.8.7 for design information to be included in the contract plan post-tensioning notes.

5.8.6.C Shop Plans

The shop plans are used to detail, install, and stress the post-tensioning system selected by the Contractor. These plans must contain sufficient information to allow the engineer to check their compliance with the contract plans. These plans must also contain the location of anchorages, stressing data, and arrangement of tendons.

5.8.6.D Review of Post-tensioning Installation Drawings

Post-tensioning installation drawings shall be reviewed by the designer (or Bridge Technical Advisor) and consulted with the Concrete Specialist if needed. Review of the drawings shall verify that the plans, specifications, applicable PTI requirements, and design assumptions are satisfied. The PTI requirements include a detailed list of most of the required items. Reviewers should pay special attention to the following:

1. Ensure that the special anchorage device test reports for post-tensioning anchorages are included, and that the tendon drawing details for post-tensioning anchorage local zones are validated by the tested anchorage configuration (i.e. minimum spacing, edge distance, and concrete strength) shown in the test reports.
2. Ensure that the layout of the post-tensioning anchorages is consistent with the design of the general zone reinforcing. If not, either the anchorage layout or general zone may need to be revised.
3. Ensure than tendon vents and drains are properly located and oriented.

5.8.6.E During Construction

1. In case of low concrete strength, the design engineer should investigate the adequacy of the design with lower strength if they suspect repairs may be avoidable.
2. If the measured elongation of a strand tendon is within ± 7 percent of the approved calculated elongation, the stressed tendon is acceptable. For tendons shorter than 40 ft, if the measured elongation is within ± 7 percent + ¼ inch, the stressed tendon is acceptable.
3. If the measured elongation is greater than the allowable range, anchorage force verification after seating (lift-off force) should be performed. The lift-off force should not be less than 99 percent of the approved calculated force nor more than 70% $f$pu As.
4. If the measured elongation is less than the allowable range, anchorage force verification of the fixed-end anchorage should be performed. The designer could consider acceptance where the total prestressing force in a web, girder, or even bridge cross-section is greater than 98% of the design prestressing force.
5. One broken strand per tendon may be structurally acceptable. (Post-tensioning design shall preferably allow one broken strand). If more than one strand per tendon is broken, the designed should consider the ability of the other tendons in the structure to provide prestressing and strength.
6. Other problems such as unbalanced and out of sequence post-tensioning, strand surface condition, strand subjected to corrosion and exposure, delayed post-tensioning, jack calibration, etc. should be evaluated on a case-by-case basis in coordination with the contractor, post-tensioning system supplier, HQ Bridge Construction Office, and the Engineer of Record.

5.8.7 Post-tensioning Notes Contract Plans

5.8.7.A Plan Details

The Plans for post-tensioned concrete shall include a longitudinal section showing the vertical profile of the center-of-gravity of the prestressing force, camber diagram for dead load plus prestress force, and the post-tensioning notes as suggested in Section 5.8.7.B. The following information shall typically be included in a post-tensioning table on a per-web basis: minimum required concrete strengths at the time of stressing, minimum number of strands required, jacking load, anchorage load after seating, and long term prestress losses.

5.8.7.B Post-tensioning Notes

1. THE POST-TENSIONING SYSTEM SHALL CONFORM TO THE REQUIREMENTS FOR PROTECTION LEVEL 2 (PL-2).
2. THE DESIGN IS BASED ON 0.6"ø LOW RELAXATION STRANDS WITH THE ESTIMATED AVERAGE LONG TERM PRESTRESS LOSS DUE TO STEEL RELAXATION, ELASTIC SHORTENING, CREEP AND SHRINKAGE OF CONCRETE SHOWN IN THE POST-TENSIONING TABLE.
3. THE ACTUAL ANCHOR SET, INSTANTANEOUS PRESTRESS LOSS AND JACKING FORCE CALCULATED BY THE CONTRACTOR SHALL BE SPECIFIED IN THE POST-TENSIONING INSTALLATION DRAWINGS. THE DESIGN IS BASED ON INSTANTANEOUS PRESTRESS LOSS ASSUMING THE FOLLOWING:
   A. ANCHOR SET OF ⅜”
   B. FRICTION, μ = 0.14
   C. WOBBLE COEFFICIENT, k = 0.0002/FT
4. THE DUCT SHALL BE ROUND AND THE MAXIMUM SIZE SHALL BE [???]”. THE INSIDE CROSS-SECTIONAL AREA OF THE DUCT SHALL BE AT LEAST 2.5 TIMES THE NET AREA OF THE PRESTRESSING STEEL IN THE DUCT.
5. THE COMPRESSIVE STRENGTH OF CONCRETE AT THE TIME OF STRESSING SHALL BE AS SHOWN IN POST-TENSIONING TABLE OR THE POST-TENSIONING INSTALLATION DRAWINGS, WHICHEVER IS HIGHER.
6. ALL TENDONS SHALL BE STRESSED FROM [ONE END, BOTH ENDS, ALTERNATING ENDS, . . .].
7. THE TENDON STRESSING SEQUENCE SHALL MEET THE FOLLOWING CRITERIA:
   A. THE PRESTRESSING FORCE SHALL BE APPLIED SYMMETRICALLY ABOUT THE CENTERLINE OF THE BRIDGE.
   B. THE PRESTRESSING FORCE IN ADJACENT WEBS/GIRDERS SHALL NOT DIFFER BY MORE THAN THE TOTAL PRESTRESSING FORCE OF ONE TENDON.
   C. AT NO TIME DURING THE STRESSING OPERATION SHALL MORE THAN ⅙ OF THE TOTAL PRESTRESSING FORCE BE APPLIED ECCENTRICALLY ABOUT THE CENTERLINE OF THE BRIDGE.

5.9 Spliced Prestressed Concrete Girders

5.9.1 Definitions

The provisions herein apply to precast girders fabricated in segments that are spliced longitudinally to form the girders in the final structure. The cross-section for this type of bridge is typically composed of wide flange I girders or trapezoidal tub girders with a composite CIP deck. WSDOT Bridge and Structure office's standard drawings for spliced I-girders are as shown on the Bridge Standard Drawings website (www.wsdot.wa.gov/Bridge/Structures/StandardDrawings.htm). Span capabilities of spliced prestressed concrete girders are shown in Appendices 5.6-A1-8 for I girders and 5.6-A1-9 for trapezoidal tub girders.

Prestressed concrete wide flange deck girder or deck bulb tee girder bridges may also be fabricated in segments and spliced longitudinally. Splicing in this type of girder may be beneficial because the significant weight of the cross-section may exceed usual limits for handling and transportation. Spliced structures of this type, which have longitudinal joints in the deck between each deck girder, shall comply with the additional requirements of AASHTO LRFD Section 5.12.2.3.

Spliced prestressed concrete girder bridges may be distinguished from what is referred to as "segmental construction" in bridge specifications by several features which typically include:

- The lengths of some or all segments in a bridge are a significant fraction of the span length rather than having a large number of segments in each span.
- Design of joints between girder segments at the service limit state does not typically govern the design for the entire length of the bridge for either construction or for the completed structure.
- 2'-0" minimum CIP concrete closures are required for connecting spliced girder segments, where segmental bridge segments are often joined with epoxy in match-cast joints.
- The bridge cross-section is composed of girders with a CIP concrete composite deck rather than precasting the full width and depth of the superstructure as one piece. In some cases, the deck may be integrally cast with each girder. Connecting the girders across the longitudinal joints completes a bridge of this type.
- Girder sections are used, such as bulb tee, deck bulb tee or tub girders, rather than closed cell boxes with wide monolithic flanges.
- Provisional ducts are required for segmental construction to provide for possible adjustment of prestress force during construction. Similar requirements are not given for spliced prestressed concrete girder bridges because of the redundancy provided by a greater number of webs and tendons, and typically lower friction losses because of fewer joint locations.

5.9.2 WSDOT Criteria for Use of Spliced Girders

See Section 5.6.3.D.3 for criteria on providing an alternate spliced-girder design for long span one-piece pre-tensioned girders.

5.9.3 Girder Segment Design

5.9.3.A Design Considerations

Stress limits for temporary concrete stresses in girder segments specified in Section 5.2.1C shall apply at each stage of pretensioning or posttensioning. The concrete strength at release and initial lifting shall be f'_{ci} and at the time the post-tensioning is applied shall be f'_c in the stress limits.

Stress limits for final concrete stresses at the service load in girder segments as specified in Section 5.2.1C shall apply for intermediate load stages with the concrete strength at the time of loading shall be f'_c in the stress limits.

All supports required prior to the splicing of the girder shall be shown on the contract documents, including elevations and reactions. The stage of construction during which the temporary supports are removed shall also be shown on the contract documents.

Stresses computations shall account for changes in the structural system, in particular the effects of the application of load to one structural system and its removal from a different structural system. Redistribution of such stresses by creep shall be taken into account and allowance shall be made for possible variations in the creep rate and magnitude.

Prestress losses in spliced prestressed concrete girder bridges shall be estimated using the provisions of Section 5.1.4. The effects of combined pretensioning and post-tensioning and staged post-tensioning shall be considered. When required, the effects of creep and shrinkage in spliced prestressed concrete girder bridges shall be estimated using the provisions of Section 5.1.1.

The designer shall consider requirements for bracing of the girder segments once they have been erected. Any requirements for bracing during subsequent stages of construction that the contractor needs to design shall be specified in the contract documents.

5.9.3.B Post-tensioning

Longitudinal post-tensioning may be applied with the following considerations:

1. Post-tensioning precast segments in their final position before deck casting. This option is recommended by WSDOT for all spliced girder bridges. This option may require higher concrete compressive stress at CIP closures. But this option is more suitable for future deck repairs and deck replacement since the deck is not prestressed.
2. Post-tensioning girder line segments before erecting girders. Handling and shipping of spliced girders with segments post-tensioned prior to erection requires larger cranes and more staging area. This option may be used in some cases where the use of temporary support at the bridge site is not feasible.
3. Post-tensioning after deck casting. This option require lower concrete compressive stress at CIP closure. This option complicates future deck repairs and deck replacements since the deck is prestressed.
4. Two stage post-tensioning where girders are post-tensioned separately for dead load in the first stage, followed by post-tensioning the entire superstructure in a second stage after deck placement.

Designers shall investigate the required concrete compressive strength at the CIP closures. Achieving high strength concrete for CIP closures may be challenging in some locations.

Ducts for longitudinal post-tensioning shall be kept below the bridge deck, and ideally below the top of web when they could be exposed to damage during construction.

Effects of curved tendons shall be considered in accordance with Section 5.8.1.F.

All post-tensioning tendons shall be fully grouted after stressing. For construction cases prior to grouting posttensioning ducts, cross-section properties shall be reduced by deducting the area of ducts and void areas around tendon couplers.

Where some or all post-tensioning is applied after the bridge deck concrete is placed, fewer posttensioning tendons and a lower concrete strength in the closure joint may be required. However, deck replacement, if necessary, is difficult to accommodate with this construction sequence. Where all of the post-tensioning is applied before the deck concrete is placed, a greater number of post tensioning tendons and a higher concrete strength in the closure joint may be required. However, in this case, the deck can be replaced if necessary.

5.9.4 Joints Between Segments

5.9.4.A General

Cast-in-place closure joints are typically used in spliced girder construction. The sequence of placing concrete for the closure joints and bridge deck shall be specified in the contract documents. Match-cast joints shall not be specified for spliced girder bridges unless approved by the Bridge Design Engineer. Prestress, dead load, and creep effects may cause rotation of the faces of the match-cast joints prior to splicing. If match cast joint is specified, the procedures for splicing the girder segments that overcome this rotation to close the match-cast joint shall be shown on the contract plans.

5.9.4.B Location of Closure Joints

The location of intermediate diaphragms shall be offset by at least 2′-0″ from the edge of cast-in-place closure joints.

In horizontally curved spliced girder bridges, intermediate diaphragms could be located at the CIP closure joints if straight segments are spliced with deflection points at closures. In this case, the diaphragm should be extended beyond the face of the exterior girder for improved development of diaphragm reinforcement.

The final configuration of the closures shall be coordinated with the State Bridge and Structures Architect on all highly visible bridges, such as bridges over vehicular or pedestrian traffic.

5.9.4.C Details of Closure Joints

The length of a closure joint between concrete segments shall allow for the splicing of steel whose continuity is required by design considerations and the accommodation of the splicing of post-tensioning ducts. The length of a closure joint shall not be less than 2′-0″. A longer closure joint may be used to provide more room to accommodate tolerances for potential misalignment of ducts within girder segments and misalignment of girder segments at erection.

Web reinforcement within the joint shall be the larger of that in the adjacent girders. The face of the segments at closure joints shall be specified as intentionally roughened surface or use a sawtooth pattern.

Concrete cover to web stirrups at the CIP closures of pier diaphragms shall not be less than 2½″. If intermediate diaphragm locations coincide with CIP closures between segments, then the concrete cover at the CIP closures shall not be less than 2½″. This increase in concrete cover is not necessary if intermediate diaphragm locations are away from the CIP closures. See Figures 5.9.4-1 to 5.9.4-3 for details of closure joints.

Adequate reinforcement shall be provided to confine tendons at CIP closures and at intermediate pier diaphragms. The reinforcement shall be proportioned to ensure that the steel stress during the jacking operation does not exceed $0.6f_y$.

The clear spacing between the outside diameter of ducts at CIP closures of pier diaphragms shall be 2.0″ minimum.

On the construction sequence sheet indicate that the side forms at the CIP closures and intermediate pier diaphragms shall be removed to inspect for concrete consolidation prior to post-tensioning and grouting.

Self-consolidating concrete (SCC) may be used for CIP closures.

5.9.4.D Joint Design

Stress limits for temporary concrete stresses in joints before losses specified in Section 5.2.1.C shall apply at each stage of post-tensioning. The concrete strength at the time the stage of post-tensioning is applied shall be substituted for f'_{ci} in the stress limits.

Stress limits for concrete stresses in joints at the service limit state after losses specified in Section 5.2.1.C shall apply. These stress limits shall also apply for intermediate load stages, with the concrete strength at the time of loading substituted for f'_c in the stress limits. The compressive strength of the closure joint concrete at a specified age shall be compatible with design stress limitations.

Figure 5.9.4-1 CIP Closure at Pier Diaphragm

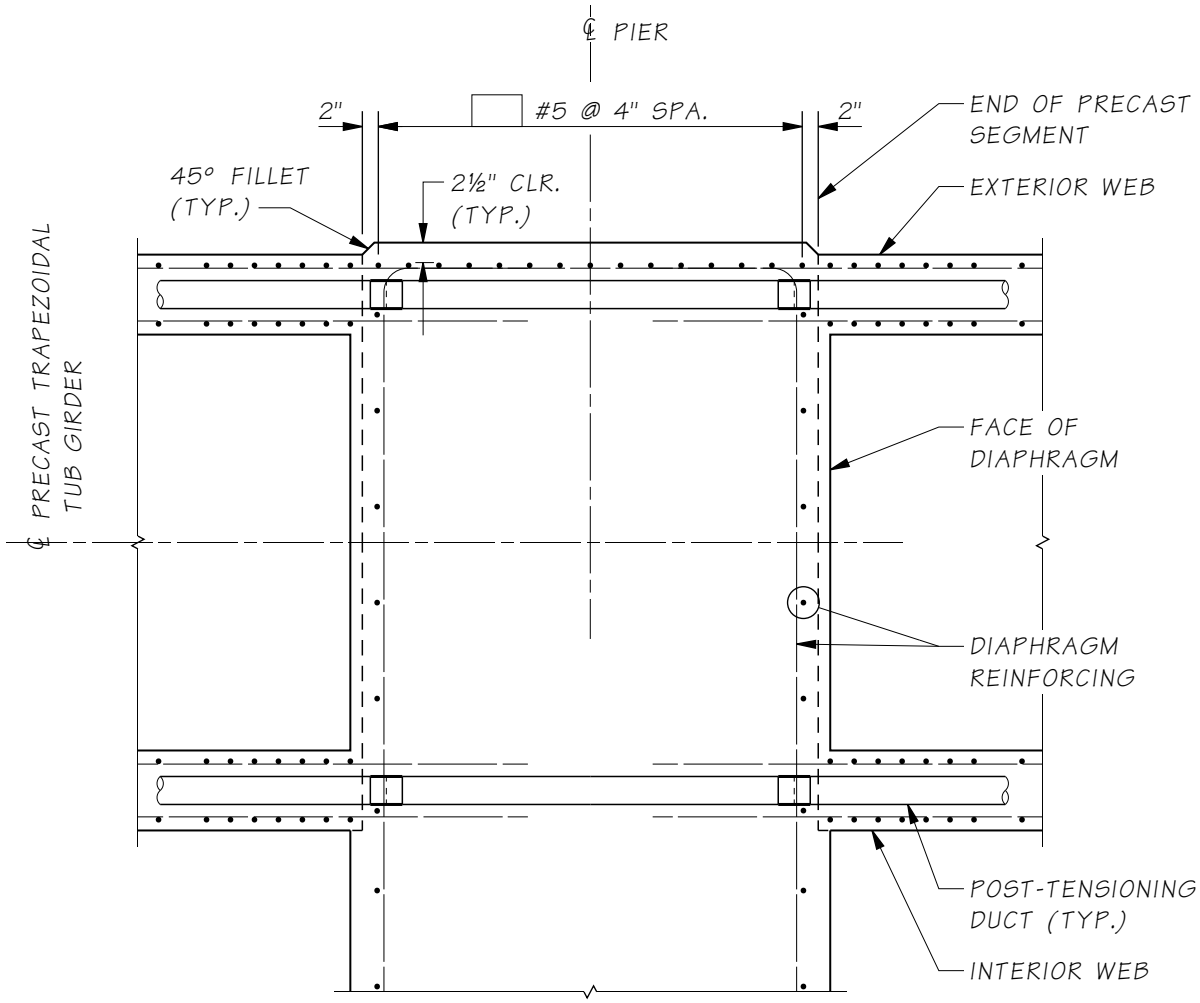

Figure 5.9.4-2 CIP Closure Away from Intermediate Diaphragm

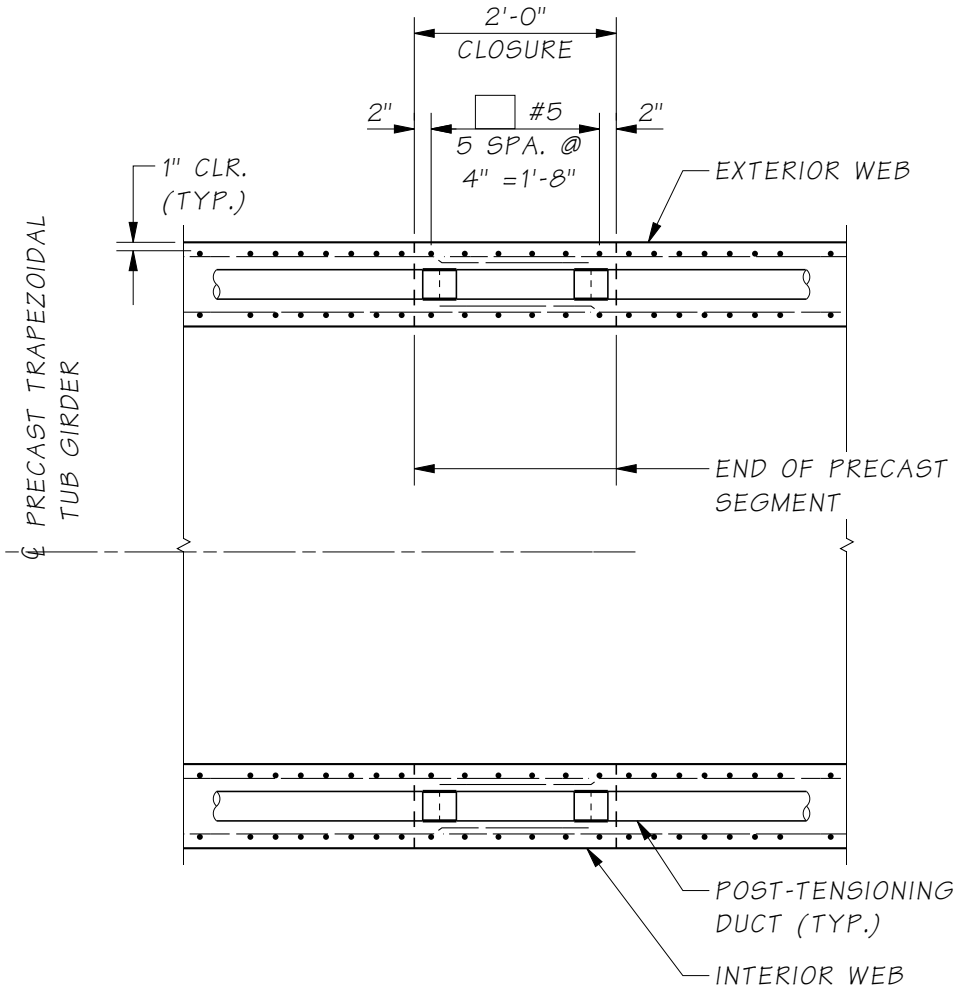

Figure 5.9.4-3 CIP Closure at Intermediate Diaphragm

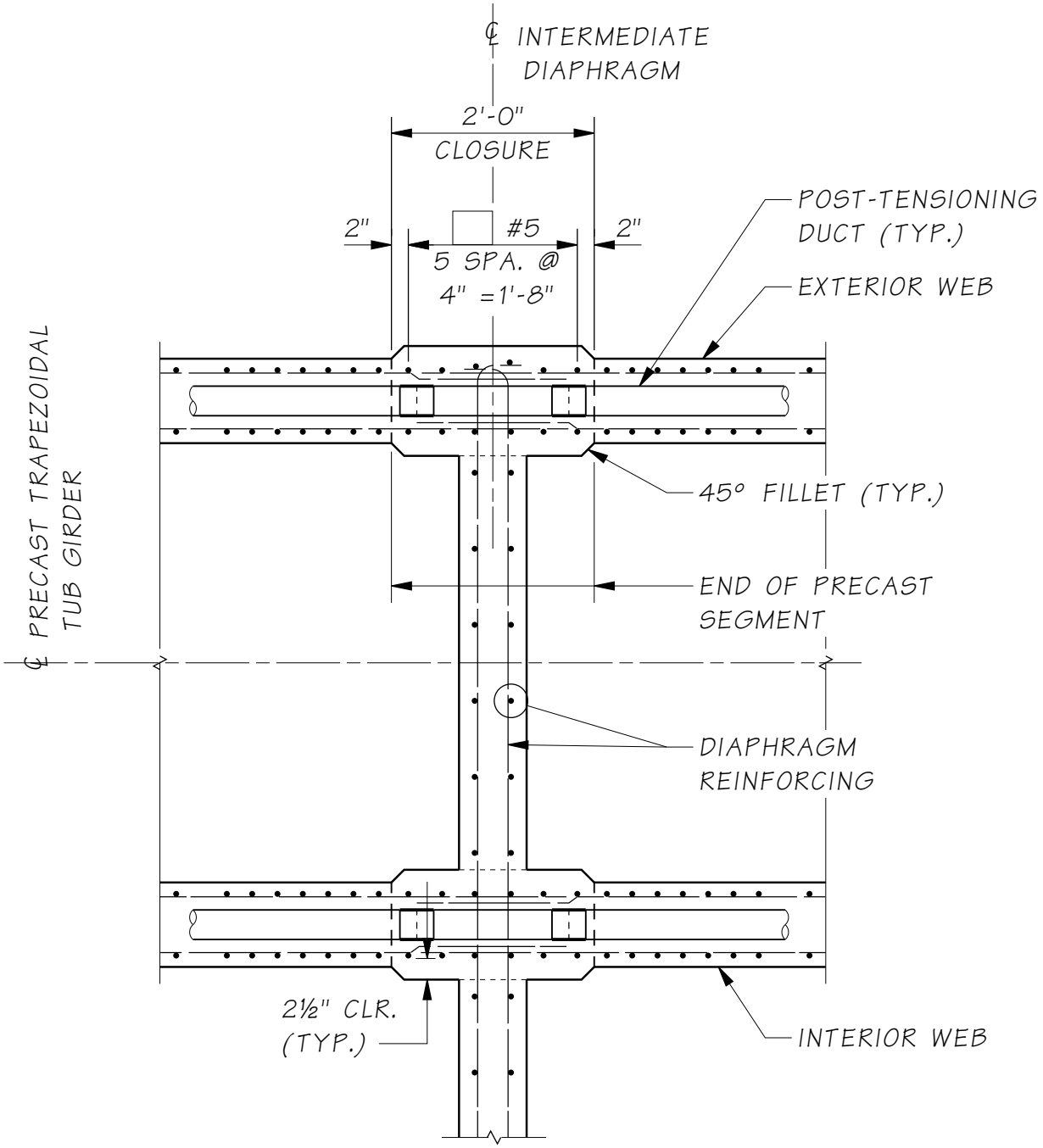

5.9.5 Review of Shop Plans for Spliced Prestressed Concrete Girders

Shop drawings and post-tensioning installation drawings for spliced prestressed concrete girders shall be reviewed by the designer or Engineer-of-Record and consulted with the Concrete Specialist if needed. See Section 5.6.10 for the review of girder shop drawings, and Section 5.8.6.D for the review of post-tensioning installation drawings.

5.9.6 Post-tensioning Notes — Spliced Prestressed Concrete Girders

Contract plan preparation for spliced prestressed concrete girders should include the details and notes in Section 5.8.7.

5.10 Segmental Bridges

5.10.1 *Cross Section Dimensions*

For segmental box girder bridges of span length L, girder depth (d_o), top flange width (b) the cross section should satisfy the following:

For constant depth girders: $1/15 > d_o/L > 1/30$

For single cell box girders: $d_o/b \geq 1/6$

Top flange overhangs should not exceed 0.45 times the interior span of the top flange

5.11 Bridge Standard Drawings

Girder Sections

5.6-A1-10 Prestressed Concrete I and WF Girders (PDF 75KB) (DWG 62KB)
5.6-A1-11 Prestressed Concrete Deck Girders (PDF 118KB) (DWG 79KB)
5.6-A1-12 Spliced Prestressed Concrete Girder (PDF 127KB) (DWG 73KB)
5.6-A1-13 Prestressed Concrete Tub Girders (PDF 65KB) (DWG 41KB)

Superstructure Construction Sequences

5.6-A2-1 Single Span Prestressed Girder Construction Sequence (PDF 84KB) (DWG 64KB)
5.6-A2-2 Multiple Span Prestressed Girder Construction Sequence (PDF 80KB) (DWG 51KB)
5.6-A2-3 Raised Crossbeam Prestressed Girder Construction Sequence (PDF 80KB) (DWG 51KB)

W Girders

5.6-A3-1 W42G Girder Details 1 of 2 (PDF 109KB) (DWG 140KB)
5.6-A3-2 W42G Girder Details 2 of 2 (PDF 86KB) (DWG 136KB)
5.6-A3-3 W50G Girder Details 1 of 2 (PDF 110KB) (DWG 136KB)
5.6-A3-4 W50G Girder Details 2 of 2 (PDF 87KB) (DWG 125KB)
5.6-A3-5 W58G Girder Details 1 of 3 (PDF 111KB) (DWG 142KB)
5.6-A3-6 W58G Girder Details 2 of 3 (PDF 85KB) (DWG 184KB)
5.6-A3-7 W58G Girder Details 3 of 3 (PDF 85KB) (DWG 77KB)
5.6-A3-8 W74G Girder Details 1 of 3 (PDF 114KB) (DWG 147KB)
5.6-A3-9 W74G Girder Details 2 of 3 (PDF 85KB) (DWG 117KB)
5.6-A3-10 W74G Girder Details 3 of 3 (PDF 69KB) (DWG 83KB)

WF Girders

5.6-A4-1 WF Girder Details 1 of 5 (PDF 120KB) (DWG 82KB)
5.6-A4-2 WF Girder Details 2 of 5 (PDF 103KB) (DWG 107KB)
5.6-A4-3 WF Girder Details 3 of 5 (PDF 99KB) (DWG 90KB)
5.6-A4-4 WF Girder Details 4 of 5 (PDF 105KB) (DWG 105KB)
5.6-A4-5 WF Girder Details 5 of 5 (PDF 101KB) (DWG 99KB)
5.6-A4-6 Additional Extended Strands (PDF 88KB) (DWG 73KB)
5.6-A4-7 End Diaphragm Details (PDF 143KB) (DWG 115KB)
5.6-A4-8 L Abutment End Diaphragm Details (PDF 126KB) (DWG 106KB)
5.6-A4-9 Diaphragm at Intermediate Pier Details (PDF 135KB) (DWG 153KB)
5.6-A4-10 Partial Depth Intermediate Diaphragm Details (PDF 106KB) (DWG 95KB)
5.6-A4-11 Full Depth Intermediate Diaphragm Details (PDF 99KB) (DWG 99KB)
5.6-A4-12 I Girder Bearing Details (PDF 109KB) (DWG 86KB)

Wide Flange Thin Deck Girders

5.6-A5-1 WF Thin Deck Girder Details 1 of 5 (PDF 121KB) (DWG 81KB)
5.6-A5-2 WF Thin Deck Girder Details 2 of 5 (PDF 106KB) (DWG 119KB)
5.6-A5-3 WF Thin Deck Girder Details 3 of 5 (PDF 103KB) (DWG 98KB)
5.6-A5-4 WF Thin Deck Girder Details 4 of 5 (PDF 111KB) (DWG 119KB)
5.6-A5-5 WF Thin Deck Girder Details 5 of 5 (PDF 101KB) (DWG 101KB)
5.6-A5-6 WF Thin Deck Girder End Diaphragm Details (PDF 147KB) (DWG 111KB)
5.6-A5-7 WF Thin Deck Girder L Abutment End Diaphragm Details (PDF 127KB) (DWG 110KB)
5.6-A5-8 WF Thin Deck Girder Diaphragm at Intermediate Pier Details (PDF 129KB) (DWG 149KB)
5.6-A5-9 WF Thin Deck Girder Partial Depth Intermediate Diaphragm (PDF 100KB) (DWG 84KB)
5.6-A5-10 WF Thin Deck Girder Full Depth Intermediate Diaphragm (PDF 98KB) (DWG 48KB)

Wide Flange Deck Girders

5.6-A6-1 WF Deck Girder Details 1 of 4 (PDF 91KB) (DWG 41KB)
5.6-A6-2 WF Deck Girder Details 2 of 4 (PDF 88KB) (DWG 74KB)
5.6-A6-3 WF Deck Girder Details 3 of 4 (PDF 94KB) (DWG 68KB)
5.6-A6-4 WF Deck Girder Details 4 of 4 (PDF 120KB) (DWG 121KB)
5.6-A6-5 WF Deck Girder End Diaphragm Details (PDF 130KB) (DWG 72KB)
5.6-A6-6 WF Deck Girder L Abutment End Diaphragm Details (PDF 1115KB) (DWG 128KB)
5.6-A6-7 WF Deck Girder Diaphragm at Intermediate Pier Details (PDF 108KB) (DWG 71KB)
5.6-A6-8 WF Deck Girder Full Depth Intermediate Diaphragm (PDF 78KB) (DWG 52KB)

Wide Flange Deck Girders (UHPC)

5.6-A6-10 WFDG UHPC Girder Details 1 of 5 (PDF 426KB) (DWG 143KB)
5.6-A6-11 WFDG UHPC Girder Details 2 of 5 (PDF 103KB) (DWG 87KB)
5.6-A6-12 WFDG UHPC Girder Details 3 of 5 (PDF 100KB) (DWG 90KB)
5.6-A6-13 WFDG UHPC Girder Details 4 of 5 (PDF 109KB) (DWG 166KB)
5.6-A6-14 WFDG UHPC Girder Details 5 of 5 (PDF 115KB) (DWG 127KB)
5.6-A6-15 WFDG UHPC End Diaphragm Details (PDF 118KB) (DWG 110KB)
5.6-A6-16 WFDG UHPC L Abutment End Diaphragm Details (PDF 115KB) (DWG 86KB)
5.6-A6-17 WFDG UHPC Intermediate Diaphragm (PDF 115KB) (DWG 86KB)
5.6-A6-18 WFDG UHPC Full Intermediate Diaphragm (PDF 68KB) (DWG 96KB)

Deck Bulb Tee Girders

5.6-A7-1 Deck Bulb Tee Girder Schedule (PDF 112KB) (DWG 74KB)
5.6-A7-2 Deck Bulb Tee Girder Details 1 of 2 (PDF 126KB) (DWG 153KB)
5.6-A7-3 Deck Bulb Tee Girder Details 2 of 2 (PDF 126KB) (DWG 114KB)

Slabs

5.6-A8-1 Slab Girder Details 1 of 3 (PDF 129KB) (DWG 115KB)
5.6-A8-2 Slab Girder Details 2 of 3 (PDF 82KB) (DWG 134KB)
5.6-A8-3 Slab Girder Details 3 of 3 (PDF 88KB) (DWG 77KB)
5.6-A8-4 Slab Girder Fixed Diaphragm (PDF 90KB) (DWG 80KB)
5.6-A8-5 Slab Girder End Diaphragm (PDF 89KB) (DWG 81KB)
5.6-A8-6 Slab Girder Framing Plan and Typical Section (PDF 124KB) (DWG 49KB)

Tub Girders

5.6-A9-1 Tub Girder Schedule and Notes (PDF 671KB) (DWG 102KB)
5.6-A9-2 Tub Girder Details 1 of 3 (PDF 145KB) (DWG 128KB)
5.6-A9-3 Tub Girder Details 2 of 3 (PDF 69KB) (DWG 49KB)
5.6-A9-4 Tub Girder Details 3 of 3 (PDF 55KB) (DWG 37KB)
5.6-A9-5 Tub Girder End Diaphragm on Girder Details (PDF 63KB) (DWG 59KB)
5.6-A9-6 Tub Girder Raised Crossbeam Details (PDF 74KB) (DWG 55KB)
5.6-A9-7 Tub SIP Deck Panel Girder End Diaphragm on Girder Details (PDF 77KB) (DWG 56KB)
5.6-A9-8 Tub SIP Deck Panel Girder Raised Crossbeam Details (PDF 85KB) (DWG 55KB)
5.6-A9-9 Tub Girder Bearing Details (PDF 62KB) (DWG 32KB)

Stay-In-Place Deck Panel

5.6-A10-1 Stay-In-Place (SIP) Deck Panel Details (PDF 80KB) (DWG 51KB)

Post Tensioned Spliced Girders

5.9-A1-1 WF74PTG Spliced Girder Details 1 of 5 (PDF 76KB) (DWG 52KB)
5.9-A1-2 WF74PTG Spliced Girder Details 2 of 5 (PDF 69KB) (DWG 88KB)
5.9-A1-3 Spliced Girder Details 3 of 5 (PDF 68KB) (DWG 98KB)
5.9-A1-4 WF74PTG Girder Details 4 of 5 (PDF 99KB) (DWG 47KB)
5.9-A1-5 Spliced Girder Details 5 of 5 (PDF 74KB) (DWG 99KB)

5.9-A2-1 WF83PTG Spliced Girder Details 1 of 5 (PDF 70KB) (DWG 65KB)
5.9-A2-2 WF83PTG Spliced Girder Details 2 of 5 (PDF 116KB) (DWG 94KB)
5.9-A2-4 WF83PTG Spliced Girder Details 4 of 5 (PDF 72KB) (DWG 47KB)

5.9-A3-1 WF95PTG Spliced Girder Details 1 of 5 (PDF 69KB) (DWG 103KB)
5.9-A3-2 WF95PTG Spliced Girder Details 2 of 5 (PDF 117KB) (DWG 96KB)
5.9-A3-4 WF95PTG Spliced Girder Details 4 of 5 (PDF 83KB) (DWG 117KB)

5.9-A4-1 Trapezoidal Tub Girder Bearing Details (PDF 76KB) (DWG 57KB)
5.9-A4-2 Tub Spliced Girder Details 1 of 5 (PDF 70KB) (DWG 55KB)
5.9-A4-3 Tub Spliced Girder Details 2 of 5 (PDF 90KB) (DWG 62KB)
5.9-A4-4 Tub Spliced Girder Details 3 of 5 (PDF 69KB) (DWG 65KB)

5.9-A4-5	Tub Spliced Girder Details 4 of 5 (PDF 73KB) (DWG 54KB)
5.9-A4-6	Tub Spliced Girder Details 5 of 5 PDF 72KB) (DWG 50KB)
5.9-A4-7	Tub Girder End Diaphragm on Girder Details (PDF 81KB) (DWG 65KB)
5.9-A4-8	Tub Spliced Girder Raised Crossbeam Details (PDF 90KB) (DWG 59KB)
5.9-A5-1	P.T. Trapezoidal Tub SIP Deck Panel Spliced Girder Details 1 of 5 (PDF 80KB) (DWG 58KB)
5.9-A5-2	P.T. Trapezoidal Tub SIP Deck Panel Spliced Girder Details 2 of 5 (PDF 97KB) (DWG 63KB)
5.9-A5-3	P.T. Trapezoidal Tub SIP Deck Panel Spliced Girder Details 3 of 5 (PDF 74KB) (DWG 59KB)
5.9-A5-4	P.T. Trapezoidal Tub SIP Deck Panel Spliced Girder Details 4 of 5 (PDF 73KB) (DWG 54KB)
5.9-A5-5	P.T. Trapezoidal Tub SIP Deck Panel Spliced Girder Details 5 of 5 (PDF 72KB) (DWG 51KB)
5.9-A5-6	Trapezoidal Tub SIP Deck Panel Girder End Diaphragm on Girder Details (PDF 86KB) (DWG 67KB)
5.9-A5-7	Trapezoidal Tub SIP Deck Panel Spliced Girder Raised Crossbeam Details (PDF 94KB) (DWG 60KB)

5.12 Appendices

Appendix 5.1-A1	Standard Hooks
Appendix 5.1-A2	Minimum Reinforcement Clearance and Spacing for Beams and Columns
Appendix 5.1-A3	Reinforcing Bar Properties
Appendix 5.1-A4	Tension Development Length of Deformed Bars
Appendix 5.1-A5	Compression Development Length and Minimum Lap Splice of Grade 60 Bars
Appendix 5.1-A6	Tension Development Length of 90° and 180° Standard Hooks
Appendix 5.1-A7	Tension Lap Splice Lengths of Grade 60 Bars – Class B
Appendix 5.1-A8	Prestressing Strand Properties and Development Length
Appendix 5.2-A1	Working Stress Design
Appendix 5.2-A2	Working Stress Design
Appendix 5.2-A3	Working Stress Design
Appendix 5.3-A1	Positive Moment Reinforcement
Appendix 5.3-A2	Negative Moment Reinforcement
Appendix 5.3-A3	Adjusted Negative Moment Case I (Design for M at Face of Support)
Appendix 5.3-A4	Adjusted Negative Moment Case II (Design for M at 1/4 Point)
Appendix 5.3-A5	Cast-In-Place Deck Slab Design for Positive Moment Regions f'_c = 4.0 ksi
Appendix 5.3-A6	Cast-In-Place Deck Slab Design for Negative Moment Regions f'_c = 4.0 ksi
Appendix 5.3-A7	Slab Overhang Design-Interior Barrier Segment
Appendix 5.3-A8	Slab Overhang Design-End Barrier Segment
Appendix 5.6-A1-1	Span Capability of W Girders
Appendix 5.6-A1-2	Span Capability of WF Girders
Appendix 5.6-A1-3	Span Capability of Deck Bulb Tee Girders
Appendix 5.6-A1-4	Span Capability of WF Thin Deck Girders
Appendix 5.6-A1-5	Span Capability of WF Deck Girders
Appendix 5.6-A1-6	Span Capability of Trapezoidal Tub Girders without Top Flange
Appendix 5.6-A1-7	Span Capability of Trapezoidal Tub Girders with Top Flange
Appendix 5.6-A1-8	Span Capability of Post-tensioned Spliced I-Girders
Appendix 5.6-A1-9	Span Capability of Post-tensioned Spliced Tub Girders
Appendix 5.6-A1-10	Span Capability of WF Girders with Lighweight Concrete

Appendix 5.1-A1 Standard Hooks

RECOMMENDED END HOOKS
All Grades
D = Finished bend diameter

Bar Size	D	180° HOOKS		90° HOOKS
		A or G	J	A or G
#3	2¼"	5"	3"	6"
#4	3"	6"	4"	8"
#5	3¾"	7"	5"	10"
#6	4½"	8"	6"	1'-0"
#7	5¼"	10"	7"	1'-2"
#8	6"	11"	8"	1'-4"
#9	9½"	1'-3"	11¾"	1'-7"
#10	10¾"	1'-5"	1'-1¼"	1'-10"
#11	1'-0"	1'-7"	1'-2¾"	2'-0"
#14	1'-6¼"	2'-3"	1'-9¾"	2'-7"
#18	2'-0"	3'-0"	2'-4½"	3'-5"

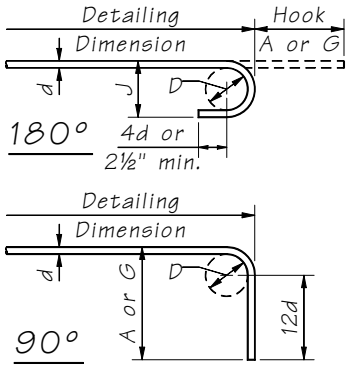

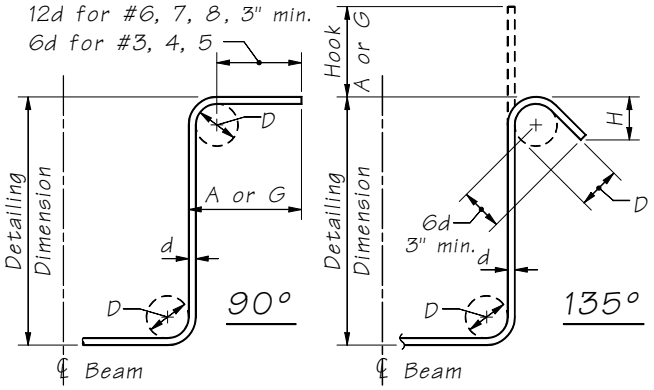

STIRRUP AND TIE HOOK DIMENSIONS
All Grades (except galvanized)

Bar Size	D	90° HOOKS	135° HOOKS	
		Hook A or G	Hook A or G	H Approx.
#3	2"	4½"	4½"	2¾"
#4	2½"	4¾"	5"	3"
#5	3¼"	6"	6"	3¾"
#6	4½"	1'-0"	8"	4½"
#7	5¼"	1'-2"	9"	5¼"
#8	6"	1'-4"	10½"	6"

(Updated 3/2022)

Appendix 5.1-A2 Minimum Reinforcement Clearance and Spacing for Beams and Columns

PREFERED MINIMUM CLEARANCE AND SPACING
FOR BEAMS AND COLUMNS.
(DISTANCES IN INCHES)

Bar Size	A	B	C	D
#4	3¼	4	-	-
5	3½	4¼	-	-
6	3¾	4½	-	-
7	4	4¾	-	-
8	4¼	5	4½	5½
9	4½	5¼	4¾	6
10	4¾	5½	5	6¼
11	5	6	5⅛	6½
14	5½	7	5½	7¼
18	6	8½	6¾	9

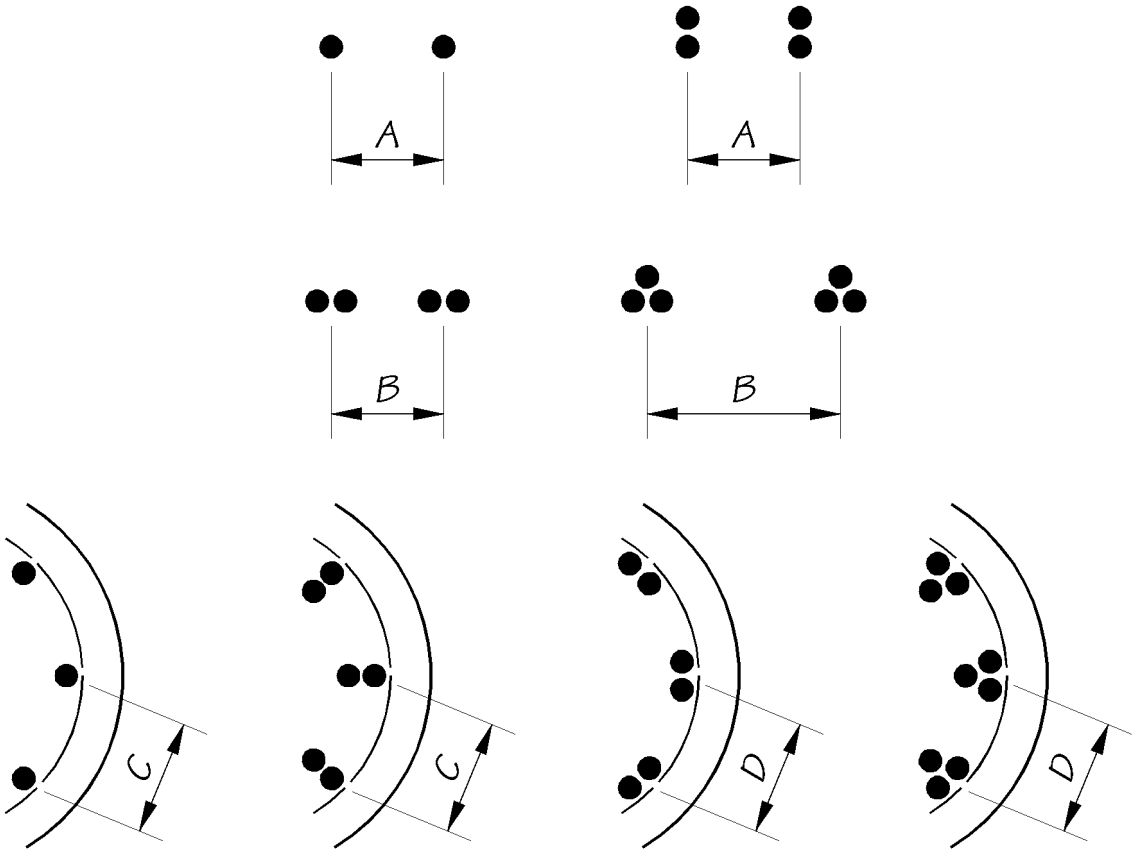

Appendix 5.1-A3 Reinforcing Bar Properties

Bar Size (#)	Weight (lbs/ft)	Nominal Diameter (in)	Outside Diameter (in)	Area (in^2)	Standard Mill Length (ft)
3	0.376	0.375	0.42	0.11	40
4	0.668	0.500	0.56	0.20	40
5	1.043	0.625	0.70	0.31	60
6	1.502	0.750	0.83	0.44	60
7	2.044	0.875	0.96	0.60	60
8	2.670	1.000	1.10	0.79	60
9	3.400	1.128	1.24	1.00	60
10	4.303	1.270	1.40	1.27	60
11	5.313	1.410	1.55	1.56	60
14	7.65	1.693	1.86	2.25	60
18	13.60	2.257	2.48	4.00	60

Appendix 5.1-A4 Tension Development Length of Deformed Bars

			Tension Development Length l_d of Uncoated Deformed Bars (in)							
Bar	$f'c$	Basic Dev.	λ_{rc} = 0.4		λ_{rc} = 0.6		λ_{rc} = 0.8		λ_{rc} = 1.0	
(#)	(ksi)	Len. l_{db} (in)	Top Bars	Others	Top Bars	Others	Top Bars	Others	Top Bars	Others
3	4.0	27.00	14.04	12.00	21.06	16.20	28.08	21.60	35.10	27.00
	5.0	24.15	12.56	12.00	18.84	14.49	25.12	19.32	31.39	24.15
	6.0	22.05	12.00	12.00	17.20	13.23	22.93	17.64	28.66	22.05
4	4.0	36.00	18.72	14.40	28.08	21.60	37.44	28.80	46.80	36.00
	5.0	32.20	16.74	12.88	25.12	19.32	33.49	25.76	41.86	32.20
	6.0	29.39	15.28	12.00	22.93	17.64	30.57	23.52	38.21	29.39
5	4.0	45.00	23.40	18.00	35.10	27.00	46.80	36.00	58.50	45.00
	5.0	40.25	20.93	16.10	31.39	24.15	41.86	32.20	52.32	40.25
	6.0	36.74	19.11	14.70	28.66	22.05	38.21	29.39	47.77	36.74
6	4.0	54.00	28.08	21.60	42.12	32.40	56.16	43.20	70.20	54.00
	5.0	48.30	25.12	19.32	37.67	28.98	50.23	38.64	62.79	48.30
	6.0	44.09	22.93	17.64	34.39	26.45	45.85	35.27	57.32	44.09
7	4.0	63.00	32.76	25.20	49.14	37.80	65.52	50.40	81.90	63.00
	5.0	56.35	29.30	22.54	43.95	33.81	58.60	45.08	73.25	56.35
	6.0	51.44	26.75	20.58	40.12	30.86	53.50	41.15	66.87	51.44
8	4.0	72.00	37.44	28.80	56.16	43.20	74.88	57.60	93.60	72.00
	5.0	64.40	33.49	25.76	50.23	38.64	66.97	51.52	83.72	64.40
	6.0	58.79	30.57	23.52	45.85	35.27	61.14	47.03	76.42	58.79
9	4.0	81.22	42.23	32.49	63.35	48.73	84.46	64.97	105.58	81.22
	5.0	72.64	37.77	29.06	56.66	43.59	75.55	58.11	94.43	72.64
	6.0	66.31	34.48	26.53	51.72	39.79	68.97	53.05	86.21	66.31
10	4.0	91.44	47.55	36.58	71.32	54.86	95.10	73.15	118.87	91.44
	5.0	81.79	42.53	32.71	63.79	49.07	85.06	65.43	106.32	81.79
	6.0	74.66	38.82	29.86	58.24	44.80	77.65	59.73	97.06	74.66
11	4.0	101.52	52.79	40.61	79.19	60.91	105.58	81.22	131.98	101.52
	5.0	90.80	47.22	36.32	70.83	54.48	94.43	72.64	118.04	90.80
	6.0	82.89	43.10	33.16	64.65	49.73	86.21	66.31	107.76	82.89
14	4.0	121.90	63.39	48.76	95.08	73.14	126.77	97.52	158.46	121.90
	5.0	109.03	56.69	43.61	85.04	65.42	113.39	87.22	141.74	109.03
	6.0	99.53	51.75	39.81	77.63	59.72	103.51	79.62	129.39	99.53
18	4.0	162.50	84.50	65.00	126.75	97.50	169.00	130.00	211.26	162.50
	5.0	145.35	75.58	58.14	113.37	87.21	151.16	116.28	188.95	145.35
	6.0	132.68	69.00	53.07	103.49	79.61	137.99	106.15	172.49	132.68

Notes:

1. Values based on use of normal weight concrete.
2. Values based on use of grade 60 reinforcement.
3. Top bars are horizontal bars placed so that more than 12” of fresh concrete is cast below the reinforcement.
4. The minimum tension development length = 12”.
5. λ_{rc} is the Reinforcement Confinement Factor.

			Tension Development Length ld of Epoxy Coated Deformed Bars (in) (cover less than 3_{db} or clear spacing between bars less than 6_{db}) λ_{cf} = 1.5							
Bar	$f'c$	Basic Dev.	λ_{rc} = 0.4		λ_{rc} = 0.6		λ_{rc} = 0.8		λ_{rc} = 1.0	
(#)	(ksi)	Len. l_{db} (in)	Top Bars	Others	Top Bars	Others	Top Bars	Others	Top Bars	Others
3	4.0	27.00	18.36	16.20	27.54	24.30	36.72	32.40	45.90	40.50
	5.0	24.15	16.42	14.49	24.63	21.73	32.84	28.98	41.05	36.22
	6.0	22.05	14.99	13.23	22.49	19.84	29.98	26.45	37.48	33.07
4	4.0	36.00	24.48	21.60	36.72	32.40	48.96	43.20	61.20	54.00
	5.0	32.20	21.90	19.32	32.84	28.98	43.79	38.64	54.74	48.30
	6.0	29.39	19.99	17.64	29.98	26.45	39.98	35.27	49.97	44.09
5	4.0	45.00	30.60	27.00	45.90	40.50	61.20	54.00	76.50	67.50
	5.0	40.25	27.37	24.15	41.05	36.22	54.74	48.30	68.42	60.37
	6.0	36.74	24.98	22.05	37.48	33.07	49.97	44.09	62.46	55.11
6	4.0	54.00	36.72	32.40	55.08	48.60	73.44	64.80	91.80	81.00
	5.0	48.30	32.84	28.98	49.27	43.47	65.69	57.96	82.11	72.45
	6.0	44.09	29.98	26.45	44.97	39.68	59.96	52.91	74.95	66.14
7	4.0	63.00	42.84	37.80	64.26	56.70	85.68	75.60	107.10	94.50
	5.0	56.35	38.32	33.81	57.48	50.71	76.63	67.62	95.79	84.52
	6.0	51.44	34.98	30.86	52.47	46.30	69.96	61.73	87.45	77.16
8	4.0	72.00	48.96	43.20	73.44	64.80	97.92	86.40	122.40	108.00
	5.0	64.40	43.79	38.64	65.69	57.96	87.58	77.28	109.48	96.60
	6.0	58.79	39.98	35.27	59.96	52.91	79.95	70.55	99.94	88.18
9	4.0	81.22	55.23	48.73	82.84	73.09	110.45	97.46	138.07	121.82
	5.0	72.64	49.40	43.59	74.09	65.38	98.79	87.17	123.49	108.96
	6.0	66.31	45.09	39.79	67.64	59.68	90.19	79.58	112.73	99.47
10	4.0	91.44	62.18	54.86	93.27	82.30	124.36	109.73	155.45	137.16
	5.0	81.79	55.61	49.07	83.42	73.61	111.23	98.14	139.04	122.68
	6.0	74.66	50.77	44.80	76.15	67.19	101.54	89.59	126.92	111.99
11	4.0	101.52	69.03	60.91	103.55	91.37	138.07	121.82	172.58	152.28
	5.0	90.80	61.75	54.48	92.62	81.72	123.49	108.96	154.36	136.20
	6.0	82.89	56.37	49.73	84.55	74.60	112.73	99.47	140.91	124.34
14	4.0	121.90	82.89	73.14	124.33	109.71	165.78	146.28	207.22	182.84
	5.0	109.03	74.14	65.42	111.21	98.12	148.28	130.83	185.35	163.54
	6.0	99.53	67.68	59.72	101.52	89.57	135.36	119.43	169.20	149.29
18	4.0	162.50	110.50	97.50	165.75	146.25	221.01	195.00	276.26	243.76
	5.0	145.35	98.84	87.21	148.25	130.81	197.67	174.42	247.09	218.02
	6.0	132.68	90.23	79.61	135.34	119.42	180.45	159.22	225.56	199.03

Notes:

1. Values based on use of normal weight concrete.
2. Values based on use of grade 60 reinforcement.
3. Top bars are horizontal bars placed so that more than 12” of fresh concrete is cast below the reinforcement.
4. The minimum tension development length = 12”.
5. λ_{rc} is the Reinforcement Confinement Factor.

			Tension Development Length l_d of Epoxy Coated Deformed Bars (in) (cover not less than 3_{db} and clear spacing between bars not less than 6_{db}) λ_{cf} = 1.2							
Bar	$f'c$	Basic Dev.	λ_{rc} = 0.4		λ_{rc} = 0.6		λ_{rc} = 0.8		λ_{rc} = 1.0	
(#)	(ksi)	Len. l_{db} (in)	Top Bars	Others	Top Bars	Others	Top Bars	Others	Top Bars	Others
3	4.0	27.00	16.85	12.96	25.27	19.44	33.70	25.92	42.12	32.40
	5.0	24.15	15.07	12.00	22.60	17.39	30.14	23.18	37.67	28.98
	6.0	22.05	13.76	12.00	20.63	15.87	27.51	21.16	34.39	26.45
4	4.0	36.00	22.46	17.28	33.70	25.92	44.93	34.56	56.16	43.20
	5.0	32.20	20.09	15.46	30.14	23.18	40.18	30.91	50.23	38.64
	6.0	29.39	18.34	14.11	27.51	21.16	36.68	28.22	45.85	35.27
5	4.0	45.00	28.08	21.60	42.12	32.40	56.16	43.20	70.20	54.00
	5.0	40.25	25.12	19.32	37.67	28.98	50.23	38.64	62.79	48.30
	6.0	36.74	22.93	17.64	34.39	26.45	45.85	35.27	57.32	44.09
6	4.0	54.00	33.70	25.92	50.54	38.88	67.39	51.84	84.24	64.80
	5.0	48.30	30.14	23.18	45.21	34.78	60.28	46.37	75.35	57.96
	6.0	44.09	27.51	21.16	41.27	31.75	55.03	42.33	68.78	52.91
7	4.0	63.00	39.31	30.24	58.97	45.36	78.62	60.48	98.28	75.60
	5.0	56.35	35.16	27.05	52.74	40.57	70.32	54.09	87.90	67.62
	6.0	51.44	32.10	24.69	48.15	37.04	64.20	49.38	80.25	61.73
8	4.0	72.00	44.93	34.56	67.39	51.84	89.86	69.12	112.32	86.40
	5.0	64.40	40.18	30.91	60.28	46.37	80.37	61.82	100.46	77.28
	6.0	58.79	36.68	28.22	55.03	42.33	73.37	56.44	91.71	70.55
9	4.0	81.22	50.68	38.98	76.02	58.48	101.36	77.97	126.70	97.46
	5.0	72.64	45.33	34.87	67.99	52.30	90.66	69.74	113.32	87.17
	6.0	66.31	41.38	31.83	62.07	47.75	82.76	63.66	103.45	79.58
10	4.0	91.44	57.06	43.89	85.59	65.84	114.12	87.78	142.65	109.73
	5.0	81.79	51.03	39.26	76.55	58.89	102.07	78.51	127.59	98.14
	6.0	74.66	46.59	35.84	69.88	53.76	93.18	71.67	116.47	89.59
11	4.0	101.52	63.35	48.73	95.02	73.09	126.70	97.46	158.37	121.82
	5.0	90.80	56.66	43.59	84.99	65.38	113.32	87.17	141.65	108.96
	6.0	82.89	51.72	39.79	77.59	59.68	103.45	79.58	129.31	99.47
14	4.0	121.90	76.06	58.51	114.09	87.77	152.13	117.02	190.16	146.28
	5.0	109.03	68.03	52.33	102.05	78.50	136.07	104.67	170.08	130.83
	6.0	99.53	62.11	47.77	93.16	71.66	124.21	95.55	155.26	119.43
18	4.0	162.50	101.40	78.00	152.10	117.00	202.80	156.00	253.51	195.00
	5.0	145.35	90.70	69.77	136.05	104.65	181.39	139.53	226.74	174.42
	6.0	132.68	82.79	63.69	124.19	95.53	165.59	127.38	206.99	159.22

Notes:

1. Values based on use of normal weight concrete.
2. Values based on use of grade 60 reinforcement.
3. Top bars are horizontal bars placed so that more than 12” of fresh concrete is cast below the reinforcement.
4. The minimum tension development length = 12”.
5. λ_{rc} is the Reinforcement Confinement Factor.

Appendix 5.1-A5 Compression Development Length and Minimum Lap Splice of Grade 60 Bars

Bar (#)	Compression Development Length, l_d (in)			Min. Compression Lap Splice (in)
	f'_c = 3 ksi	f'_c = 4 ksi	$f'_c \geq$ 5 ksi	$f'c \geq$ 3 ksi
3	12.00	12.00	12.00	24.00
4	12.00	12.00	12.00	24.00
5	13.64	12.00	12.00	24.00
6	16.37	14.18	13.50	24.00
7	19.10	16.54	15.75	26.25
8	21.82	18.90	18.00	30.00
9	24.62	21.32	20.30	33.84
10	27.72	24.00	22.86	38.10
11	30.77	26.65	25.38	42.30
14	36.95	32.00	30.47	50.79
18	49.26	42.66	40.63	67.71

Notes:

1. Where excess bar area is provided, the development length may be reduced by the ratio of required area to provided area.
2. Where reinforcement is enclosed within a spiral composed of a bar of not less than 0.25 inches in diameter and spaced at not more than a 4.0 inch pitch, the compression development length may be multiplied by 0.75.
3. The minimum compression development length is 12 inches.
4. Where bars of different size are lap spliced in compression, the splice length shall not be less than the development length of the larger bar or the splice length of the smaller bar.
5. Where ties along the splice have an effective area not less than 0.15 percent of the product of the thickness of the compression component times the tie spacing, the compression lap splice may be multiplied by 0.83.
6. Where the splice is confined by spirals, the compression lap splice may be multiplied by 0.75.
7. The minimum compression lap splice length is 24 inches.

Appendix 5.1-A6 Tension Development Length of 90º and 180º Standard Hooks

Bar (#)	$f'c$ (ksi)	Basic Dev. Len. l_{hb} (in)	Standard Hook Tension Development Length l_{dh} (in)			
			Cover Factor λ_{rc} = 1.0 (see Note 5)		Cover Factor λ_{rc} = 0.8 (see Note 5)	
			Reinforcement Confinement Factor λ_{rc} = 1.0 (see Notes 6 and 7)	Reinforcement Confinement Factor λ_{rc} = 0.8 (see Notes 6 and 7)	Reinforcement Confinement Factor λ_{rc} = 1.0 (see Notes 6 and 7)	Reinforcement Confinement Factor λ_{rc} = 0.8 (see Notes 6 and 7)
3	4	7.13	7.13	6.00	6.00	6.00
	5	6.37	6.37	6.00	6.00	6.00
	6	5.82	6.00	6.00	6.00	6.00
4	4	9.50	9.50	7.60	7.60	6.08
	5	8.50	8.50	6.80	6.80	6.00
	6	7.76	7.76	6.21	6.21	6.00
5	4	11.88	11.88	9.50	9.50	7.60
	5	10.62	10.62	8.50	8.50	6.80
	6	9.70	9.70	7.76	7.76	6.21
6	4	14.25	14.25	11.40	11.40	9.12
	5	12.75	12.75	10.20	10.20	8.16
	6	11.64	11.64	9.31	9.31	7.45
7	4	16.63	16.63	13.30	13.30	10.64
	5	14.87	14.87	11.90	11.90	9.52
	6	13.57	13.57	10.86	10.86	8.69
8	4	19.00	19.00	15.20	15.20	12.16
	5	16.99	16.99	13.60	13.60	10.88
	6	15.51	15.51	12.41	12.41	9.93
9	4	21.43	21.43	17.15	17.15	13.72
	5	19.17	19.17	15.34	15.34	12.27
	6	17.50	17.50	14.00	14.00	11.20
10	4	24.13	24.13	19.30	19.30	15.44
	5	21.58	21.58	17.27	17.27	13.81
	6	19.70	19.70	15.76	15.76	12.61
11	4	26.79	26.79	21.43	21.43	17.15
	5	23.96	23.96	19.17	19.17	15.34
	6	21.87	21.87	17.50	17.50	14.00
14	4	32.17	32.17	32.17	32.17	32.17
	5	28.77	28.77	28.77	28.77	28.77
	6	26.26	26.26	26.26	26.26	26.26
18	4	42.88	42.88	42.88	42.88	42.88
	5	38.36	38.36	38.36	38.36	38.36
	6	35.01	35.01	35.01	35.01	35.01

Notes:

1. Values based on use of normal weight concrete.
2. Values based on use of grade 60 reinforcement.
3. The basic development length l_{hb} shall be multiplied by 1.2 for epoxy coated reinforcement.
4. The basic development length l_{hb} may be reduced by the ratio of required area to provided area where excess bar area is provided.
5. The basic development length l_{hb} may be multiplied by 0.8 for #11 and smaller bars for hooks with side cover normal to plane of the hook not less than 2.5 inches, and for 90 degree hook with cover on the bar extension beyond hook not less than 2.0 inches.
6. The basic development length l_{hb} may be multiplied by 0.8 for 90 degree hooks of #11 and smaller bars that are either enclosed within ties or stirrups perpendicular to the bar being developed, spaced not greater than $3d_b$ along the development length, l_{dh}, of the hook; or enclosed within ties or stirrups parallel to the bar being developed spaced not greater than $3d_b$ along the length of the tail extension of the hook plus bend, and in both cases the first tie or stirrup enclosing the bent portion of the hook is within $2d_b$ of the outside of the bend.
7. The basic development length l_{hb} may be multiplied by 0.8 for 180 degree hooks of #11 and smaller bars that are enclosed within ties or stirrups perpendicular to the bar being developed, spaced not greater than $3d_b$ along the development length, l_{dh}, of the hook, and the first tie or stirrup enclosing the bent portion of the hook is within $2d_b$ of the outside of the bend.
8. Minimum tension development length is the larger of $8d_b$ and 6 inches.

Appendix 5.1-A7 Tension Lap Splice Lengths of Grade 60 Bars – Class B

		Class B Tension Lap Splice Length of Uncoated Deformed Bars (in)							
Bar	$f'c$	λ_{rc} = 0.4		λ_{rc} = 0.6		λ_{rc} = 0.8		λ_{rc} = 1.0	
(#)	(ksi)	Top Bars	Others	Top Bars	Others	Top Bars	Others	Top Bars	Others
3	4.0	24.00	24.00	27.38	24.00	36.50	28.08	45.63	35.10
	5.0	24.00	24.00	24.49	24.00	32.65	25.12	40.81	31.39
	6.0	24.00	24.00	24.00	24.00	29.81	24.00	37.26	28.66
4	4.0	24.34	24.00	36.50	28.08	48.67	37.44	60.84	46.80
	5.0	24.00	24.00	32.65	25.12	43.53	33.49	54.42	41.86
	6.0	24.00	24.00	29.81	24.00	39.74	30.57	49.68	38.21
5	4.0	30.42	24.00	45.63	35.10	60.84	46.80	76.05	58.50
	5.0	27.21	24.00	40.81	31.39	54.42	41.86	68.02	52.32
	6.0	24.84	24.00	37.26	28.66	49.68	38.21	62.09	47.77
6	4.0	36.50	28.08	54.76	42.12	73.01	56.16	91.26	70.20
	5.0	32.65	25.12	48.98	37.67	65.30	50.23	81.63	62.79
	6.0	29.81	24.00	44.71	34.39	59.61	45.85	74.51	57.32
7	4.0	42.59	32.76	63.88	49.14	85.18	65.52	106.47	81.90
	5.0	38.09	29.30	57.14	43.95	76.18	58.60	95.23	73.25
	6.0	34.77	26.75	52.16	40.12	69.55	53.50	86.93	66.87
8	4.0	48.67	37.44	73.01	56.16	97.34	74.88	121.68	93.60
	5.0	43.53	33.49	65.30	50.23	87.07	66.97	108.83	83.72
	6.0	39.74	30.57	59.61	45.85	79.48	61.14	99.35	76.42
9	4.0	54.90	42.23	82.35	63.35	109.80	84.46	137.26	105.58
	5.0	49.11	37.77	73.66	56.66	98.21	75.55	122.76	94.43
	6.0	44.83	34.48	67.24	51.72	89.65	68.97	112.07	86.21
10	4.0	61.81	47.55	92.72	71.32	123.63	95.10	154.53	118.87
	5.0	55.29	42.53	82.93	63.79	110.58	85.06	138.22	106.32
	6.0	50.47	38.82	75.71	58.24	100.94	77.65	126.18	97.06
11	4.0	68.63	52.79	102.94	79.19	137.26	105.58	171.57	131.98
	5.0	61.38	47.22	92.07	70.83	122.76	94.43	153.46	118.04
	6.0	56.03	43.10	84.05	64.65	112.07	86.21	140.09	107.76
14		Not Allowed		Not Allowed		Not Allowed		Not Allowed	
18		Not Allowed		Not Allowed		Not Allowed		Not Allowed	

Notes:

1. Values based on use of normal weight concrete.
2. Values based on use of grade 60 reinforcement.
3. Top bars are horizontal bars placed so that more than 12” of fresh concrete is cast below the reinforcement.
4. The minimum tension lap splice length = 24”.
5. λ_{rc} is the Reinforcement Confinement Factor.
6. Class A tension lap splices may be used where the area of reinforcement provided is at least twice that required by analysis over the entire length of the lap splice and one-half or less of the total reinforcement is spliced within the required lap splice length. The Class A modification factor is 0.77.

		Class B Tension Lap Splice Length of Epoxy Coated Deformed Bars (in) (cover less than 3_{db} or clear spacing between bars less than 6_{db}) λ_{cf} = 1.5							
Bar	*f'*c	λ_{rc} = 0.4		λ_{rc} = 0.6		λ_{rc} = 0.8		λ_{rc} = 1.0	
(#)	(ksi)	Top Bars	Others	Top Bars	Others	Top Bars	Others	Top Bars	Others
3	4.0	24.00	24.00	35.80	31.59	47.74	42.12	59.67	52.65
	5.0	24.00	24.00	32.02	28.25	42.70	37.67	53.37	47.09
	6.0	24.00	24.00	29.23	25.79	38.98	34.39	48.72	42.99
4	4.0	31.82	28.08	47.74	42.12	63.65	56.16	79.56	70.20
	5.0	28.46	25.12	42.70	37.67	56.93	50.23	71.16	62.79
	6.0	25.98	24.00	38.98	34.39	51.97	45.85	64.96	57.32
5	4.0	39.78	35.10	59.67	52.65	79.56	70.20	99.45	87.75
	5.0	35.58	31.39	53.37	47.09	71.16	62.79	88.95	78.49
	6.0	32.48	28.66	48.72	42.99	64.96	57.32	81.20	71.65
6	4.0	47.74	42.12	71.60	63.18	95.47	84.24	119.34	105.30
	5.0	42.70	37.67	64.04	56.51	85.39	75.35	106.74	94.18
	6.0	38.98	34.39	58.46	51.59	77.95	68.78	97.44	85.98
7	4.0	55.69	49.14	83.54	73.71	111.38	98.28	139.23	122.85
	5.0	49.81	43.95	74.72	65.93	99.62	87.90	124.53	109.88
	6.0	45.47	40.12	68.21	60.18	90.94	80.25	113.68	100.31
8	4.0	63.65	56.16	95.47	84.24	127.30	112.32	159.12	140.40
	5.0	56.93	50.23	85.39	75.35	113.86	100.46	142.32	125.58
	6.0	51.97	45.85	77.95	68.78	103.94	91.71	129.92	114.64
9	4.0	71.79	63.35	107.69	95.02	143.59	126.70	179.49	158.37
	5.0	64.22	56.66	96.32	84.99	128.43	113.32	160.54	141.65
	6.0	58.62	51.72	87.93	77.59	117.24	103.45	146.55	129.31
10	4.0	80.83	71.32	121.25	106.98	161.67	142.65	202.08	178.31
	5.0	72.30	63.79	108.45	95.69	144.60	127.59	180.75	159.48
	6.0	66.00	58.24	99.00	87.35	132.00	116.47	165.00	145.59
11	4.0	89.74	79.19	134.62	118.78	179.49	158.37	224.36	197.96
	5.0	80.27	70.83	120.40	106.24	160.54	141.65	200.67	177.06
	6.0	73.28	64.65	109.91	96.98	146.55	129.31	183.19	161.64
14		Not Allowed		Not Allowed		Not Allowed		Not Allowed	
18		Not Allowed		Not Allowed		Not Allowed		Not Allowed	

Notes:

1. Values based on use of normal weight concrete.
2. Values based on use of grade 60 reinforcement.
3. Top bars are horizontal bars placed so that more than 12” of fresh concrete is cast below the reinforcement.
4. The minimum tension lap splice length = 24”.
5. λ_{rc} is the Reinforcement Confinement Factor.
6. Class A tension lap splices may be used where the area of reinforcement provided is at least twice that required by analysis over the entire length of the lap splice and one-half or less of the total reinforcement is spliced within the required lap splice length. The Class A modification factor is 0.77.

		Class B Tension Lap Splice Length of Epoxy Coated Deformed Bars (in) (cover not less than 3_{db} and clear spacing between bars not less than 6_{db}) λ_{cf} = 1.2							
Bar	***f'*c**	**λ_{rc} = 0.4**		**λ_{rc} = 0.6**		**λ_{rc} = 0.8**		**λ_{rc} = 1.0**	
(#)	**(ksi)**	**Top Bars**	**Others**	**Top Bars**	**Others**	**Top Bars**	**Others**	**Top Bars**	**Others**
3	4.0	24.00	24.00	32.85	25.27	43.80	33.70	54.76	42.12
	5.0	24.00	24.00	29.39	24.00	39.18	30.14	48.98	37.67
	6.0	24.00	24.00	26.82	24.00	35.77	27.51	44.71	34.39
4	4.0	29.20	24.00	43.80	33.70	58.41	44.93	73.01	56.16
	5.0	26.12	24.00	39.18	30.14	52.24	40.18	65.30	50.23
	6.0	24.00	24.00	35.77	27.51	47.69	36.68	59.61	45.85
5	4.0	36.50	28.08	54.76	42.12	73.01	56.16	91.26	70.20
	5.0	32.65	25.12	48.98	37.67	65.30	50.23	81.63	62.79
	6.0	29.81	24.00	44.71	34.39	59.61	45.85	74.51	57.32
6	4.0	43.80	33.70	65.71	50.54	87.61	67.39	109.51	84.24
	5.0	39.18	30.14	58.77	45.21	78.36	60.28	97.95	75.35
	6.0	35.77	27.51	53.65	41.27	71.53	55.03	89.42	68.78
7	4.0	51.11	39.31	76.66	58.97	102.21	78.62	127.76	98.28
	5.0	45.71	35.16	68.57	52.74	91.42	70.32	114.28	87.90
	6.0	41.73	32.10	62.59	48.15	83.46	64.20	104.32	80.25
8	4.0	58.41	44.93	87.61	67.39	116.81	89.86	146.02	112.32
	5.0	52.24	40.18	78.36	60.28	104.48	80.37	130.60	100.46
	6.0	47.69	36.68	71.53	55.03	95.38	73.37	119.22	91.71
9	4.0	65.88	50.68	98.82	76.02	131.76	101.36	164.71	126.70
	5.0	58.93	45.33	88.39	67.99	117.85	90.66	147.32	113.32
	6.0	53.79	41.38	80.69	62.07	107.59	82.76	134.48	103.45
10	4.0	74.18	57.06	111.26	85.59	148.35	114.12	185.44	142.65
	5.0	66.35	51.03	99.52	76.55	132.69	102.07	165.86	127.59
	6.0	60.56	46.59	90.85	69.88	121.13	93.18	151.41	116.47
11	4.0	82.35	63.35	123.53	95.02	164.71	126.70	205.88	158.37
	5.0	73.66	56.66	110.49	84.99	147.32	113.32	184.15	141.65
	6.0	67.24	51.72	100.86	77.59	134.48	103.45	168.10	129.31
14		Not Allowed		Not Allowed		Not Allowed		Not Allowed	
18		Not Allowed		Not Allowed		Not Allowed		Not Allowed	

Notes:

1. Values based on use of normal weight concrete.
2. Values based on use of grade 60 reinforcement.
3. Top bars are horizontal bars placed so that more than 12” of fresh concrete is cast below the reinforcement.
4. The minimum tension lap splice length = 24”.
5. λ_{rc} is the Reinforcement Confinement Factor.
6. Class A tension lap splices may be used where the area of reinforcement provided is at least twice that required by analysis over the entire length of the lap splice and one-half or less of the total reinforcement is spliced within the required lap splice length. The Class A modification factor is 0.77.

Appendix 5.1-A8 Prestressing Strand Properties and Development Length

AASHTO M203 Grade 270 Uncoated Prestressing Strands
Properties and Development Length

Strand Diameter (in)	Weight (lbs/ft)	Nominal Diameter (in)	Area (in^2)	Transfer length (in)	Develop. Length k = 1.0 (ft)	Develop. Length k = 1.6 (ft)
⅜	0.290	0.375	0.085	22.5	5.05	8.08
7/16	0.390	0.438	0.115	26.3	5.90	9.44
½	0.520	0.500	0.153	30.0	6.74	10.78
½ S	0.568	0.520	0.167	31.2	7.01	11.21
9/16	0.651	0.563	0.192	33.8	7.58	12.14
0.60	0.740	0.600	0.217	36.0	8.08	12.93
0.62	0.788	0.620	0.231	37.2	8.35	13.36
0.70	1.000	0.700	0.294	42.0	9.43	15.09

Assumptions for determining development length:

f_{ps} = f_{pu} = 270 ksi
f_{pe} = (270 ksi x 0.75)–40 ksi = 162.5 ksi

Appendix 5.2-A1 Working Stress Design

Service Load — Concrete Stresses and Constants

		CLASS	CLASS
n	(See E_c below)	8	10
f'_c		4000 psi.	3000 psi.
f_c	(Compression)	1600	1200
f_c	(Tension) Use only with special permission	100	86
f_s	(Grade 40)	20,000	20,000
f_s	(Grade 60)	24,000	24,000
v_c	(With web reinf.)	313	271
v_c		60 *	52 *
	Slabs & Footings (Peripheral Shear)		
	v_c	114	99
	v_c (With web reinf.)	190	164
K	(f_s = 24000)	246	
K	Balanced rectangular sections	272	197
k		.390	.375
j		.870	.875
p		.0156	.01125
E_c	(for stress calc.) (n as above)	522,000 #/□"	418,000 #/□"
E_c	(for short term defl. due to E. Q., etc.) (n = 8)	522,000	522,000
E_c	(for D.L. Camber of Slabs, T&S Moms., Settlement) (n=16)	261,000	261,000
E_c	(for D.L. Camber, except slabs) (n = 24)	174,000	174,000

Temp. Coeff. = .000006 1/1° ~ 45° Drop to 35° Rise ~ All climates.
Shrinkage Coeff. = .0002% (Temp. rise & shrinkage cancel).

* For more detailed analysis $v_c = 0.9(f'_c)^{\frac{1}{2}} + 1100\,\rho_w\left(\frac{Vd}{M}\right)$
See 1974 A.A.S.H.T.O. Interim I.5.29 (B)(2).

Stirrup spacing ; (Kip & inch units) $S = \frac{A_s \times f_s \times jd}{V - V_c} = \frac{A_s \times 20 \times 7/8\,d}{V_s} = \frac{17.50\,A_s \times d}{V_s}$

A_s = Total area of stirrup legs.
V_s = Total shear taken by stirrups.
V = Total shear on section.
V_c = Total shear by conc. = $v_c \times bjd$

o

$d = \sqrt{M/bK}$ (Balanced rectangular section)

$f_c = \frac{2M}{kjbd^2}$ (Rectangular section)

$f_s = \frac{M}{A_s jd}$

$v = \frac{V}{bjd}$

$n = \frac{E_s}{E_c}$

Appendix 5.2-A2 Working Stress Design

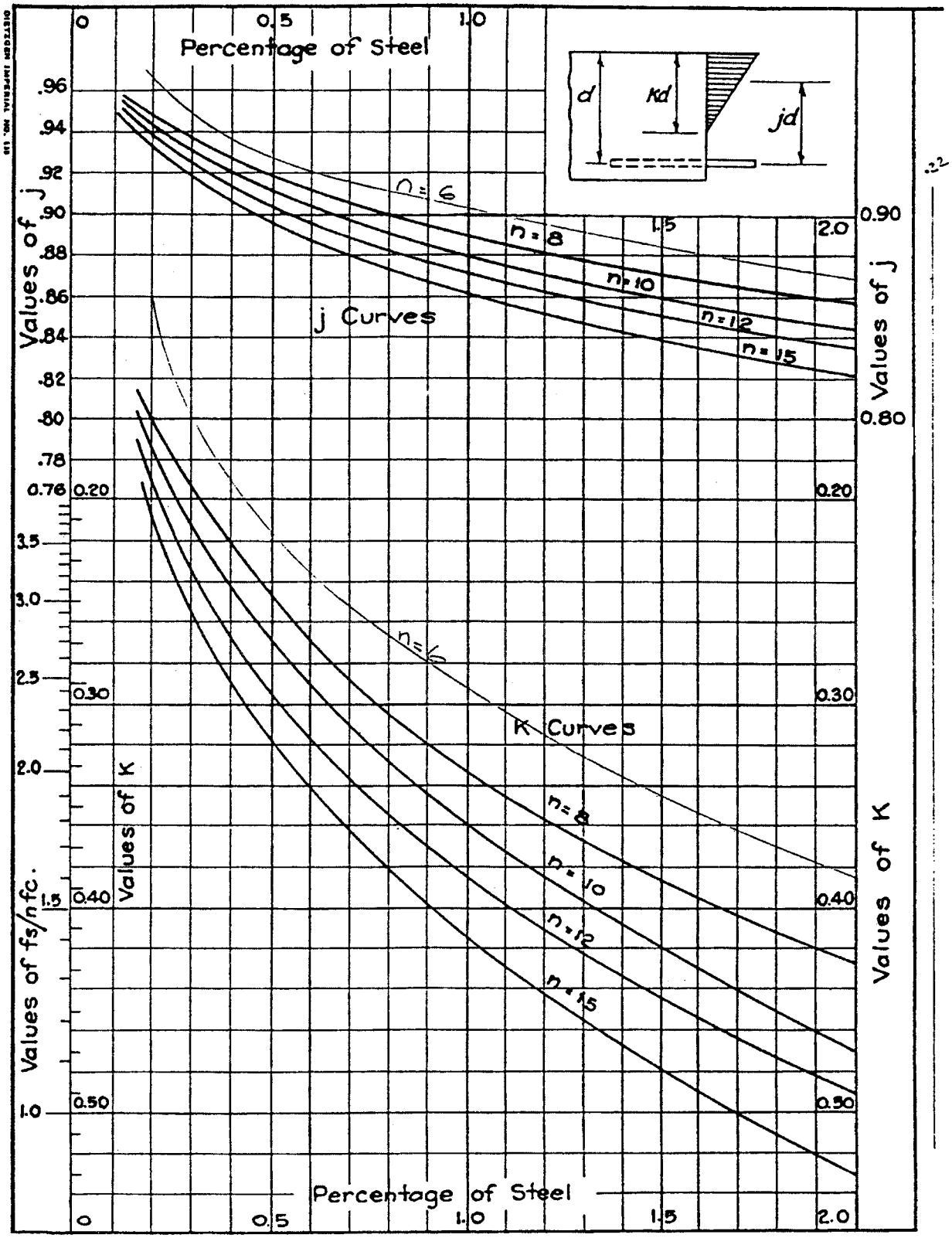

Appendix 5.2-A3 Working Stress Design

COEFFICIENTS (K, k, j, p) FOR RECTANGULAR SECTIONS

f'_c and n	f_c	K	k	j	p	K	k	j	p
		f_s = 16,000		a = 1.13		f_s = 18,000		a = 1.29	
	875.	137.	.356	.881	.0097	128.	.329	.890	.0080
2500	1000.	169.	.387	.871	.0121	158.	.359	.880	.0100
	1125.	201.	.415	.862	.0146	190.	.387	.871	.0121
10.1	1250.	235.	.441	.853	.0172	222.	.412	.863	.0143
	1500.	306.	.486	.838	.0228	291.	.457	.848	.0190
	1050.	173.	.376	.875	.0124	162.	.349	.884	.0102
3000	1200.	212.	.408	.864	.0153	199.	.380	.873	.0127
	1350.	252.	.437	.854	.0184	238.	.408	.864	.0153
9.2	1500.	294.	.463	.846	.0217	278.	.434	.855	.0181
	1800.	380.	.509	.830	.0286	362.	.479	.840	.0240
	1400.	249.	.412	.863	.0180	234.	.384	.872	.0149
4000	1600.	303.	.444	.852	.0222	286.	.416	.861	.0185
	1800.	359.	.474	.842	.0266	341.	.444	.852	.0222
8.0	2000.	417.	.500	.833	.0313	397.	.471	.843	.0261
	2400.	536.	.545	.818	.0409	513.	.516	.828	.0344
	1750.	327.	.437	.854	.0239	309.	.408	.864	.0199
5000	2000.	397.	.470	.843	.0294	376.	.441	.853	.0245
	2250.	468.	.500	.833	.0351	446.	.470	.843	.0294
7.1	2500.	542.	.526	.825	.0411	518.	.497	.835	.0345
	3000.	694.	.571	.810	.0535	666.	.542	.819	.0452
		f_s = 20,000		a = 1.44		f_s = 22,000		a = 1.60	
	875.	120.	.306	.898	.0067	113.	.287	.904	.0057
2500	1000.	149.	.336	.888	.0084	141.	.315	.895	.0072
	1125.	179.	.362	.879	.0102	170.	.341	.886	.0087
10.1	1250.	211.	.387	.871	.0121	200.	.365	.878	.0104
	1500.	277.	.431	.856	.0162	264.	.408	.864	.0139
	1050.	152.	.326	.891	.0085	144.	.305	.898	.0073
3000	1200.	188.	.356	.881	.0107	178.	.334	.889	.0091
	1350.	226.	.383	.872	.0129	214.	.361	.880	.0111
9.2	1500.	265.	.408	.864	.0153	252.	.385	.872	.0131
	1800.	346.	.453	.849	.0204	331.	.429	.857	.0176
	1400.	221.	.359	.880	.0126	210.	.337	.888	.0107
4000	1600.	272.	.390	.870	.0156	258.	.368	.877	.0134
	1800.	324.	.419	.860	.0188	309.	.396	.868	.0162
8.0	2000.	379.	.444	.852	.0222	362.	.421	.860	.0191
	2400.	492.	.490	.837	.0294	472.	.466	.845	.0254
	1750.	292.	.383	.872	.0168	278.	.361	.880	.0144
5000	2000.	358.	.415	.862	.0208	341.	.392	.869	.0178
	2250.	426.	.444	.852	.0250	407.	.421	.860	.0215
7.1	2500.	496.	.470	.843	.0294	475.	.447	.851	.0254
	3000.	641.	.516	.828	.0387	617.	.492	.836	.0335
		f_s = 27,000		a = 2.00		f_s = 30,000		a = 2.24	
	875.	99.	.247	.918	.0040	92.	.228	.924	.0033
2500	1000.	124.	.272	.909	.0050	115.	.252	.916	.0042
	1125.	150.	.296	.901	.0062	140.	.275	.908	.0052
10.1	1250.	178.	.319	.894	.0074	167.	.296	.901	.0062
	1500.	237.	.359	.880	.0100	224.	.336	.888	.0084
	1050.	126.	.264	.912	.0051	117.	.244	.919	.0043
3000	1200.	157.	.290	.903	.0064	147.	.269	.910	.0054
	1350.	190.	.315	.895	.0079	178.	.293	.902	.0066
9.2	1500.	225.	.338	.887	.0094	211.	.315	.895	.0079
	1800.	299.	.380	.873	.0127	282.	.356	.881	.0107
	1400.	185.	.293	.902	.0076	173.	.272	.909	.0063
4000	1600.	230.	.322	.893	.0095	215.	.299	.900	.0080
	1800.	277.	.348	.884	.0116	260.	.324	.892	.0097
8.0	2000.	326.	.372	.876	.0138	308.	.348	.884	.0116
	2400.	430.	.416	.861	.0185	407.	.390	.870	.0156
	1750.	247.	.315	.895	.0102	231.	.293	.902	.0085
5000	2000.	305.	.345	.885	.0128	287.	.321	.893	.0107
	2250.	366.	.372	.876	.0155	346.	.347	.884	.0130
7.1	2500.	430.	.397	.868	.0184	407.	.372	.876	.0155
	3000.	564.	.441	.853	.0245	537.	.415	.862	.0208

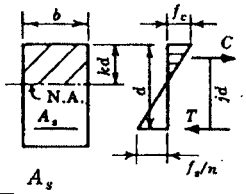

$$p = \frac{A_s}{bd}$$

$$k = \frac{1}{1 + f_s/nf_c} \qquad j = 1 - \tfrac{1}{3}k$$

$$p^* = \frac{f_c}{2f_s} \times k \qquad K = \frac{f_c}{2}kj$$

$$a = \frac{f_s}{12{,}000} \times \text{(av. } j\text{-value)}$$

for use in

$$A_s = \frac{M}{ad} \text{ or } A_s = \frac{NE}{adi}$$

K	k	j	p
f_s = 24,000		a = 1.76	
107.	.269	.910	.0049
133.	.296	.901	.0062
161.	.321	.893	.0075
191.	.345	.885	.0090
253.	.387	.871	.0121
136.	.287	.904	.0063
169.	.315	.895	.0079
204.	.341	.886	.0096
240.	.365	.878	.0114
317.	.408	.864	.0153
199.	.318	.894	.0093
246.	.348	.884	.0116
295.	.375	.875	.0141
347.	.400	.867	.0167
454.	.444	.852	.0222
265.	.341	.886	.0124
326.	.372	.876	.0155
390.	.400	.867	.0187
456.	.425	.858	.0221
595.	.470	.843	.0294
f_s = 33,000		a = 2.48	
86.	.211	.930	.0028
108.	.234	.922	.0036
132.	.256	.915	.0044
157.	.277	.908	.0052
211.	.315	.895	.0072
110.	.226	.925	.0036
138.	.251	.916	.0046
168.	.273	.909	.0056
199.	.295	.902	.0067
267.	.334	.889	.0091
162.	.253	.916	.0054
203.	.279	.907	.0068
246.	.304	.899	.0083
291.	.327	.891	.0099
387.	.368	.877	.0134
218.	.274	.909	.0073
271.	.301	.900	.0091
327.	.326	.891	.0111
386.	.350	.883	.0132
511.	.392	.869	.0178

*"Balanced steel ratio" applies to problems involving bending only.

Appendix 5.3-A1 Positive Moment Reinforcement

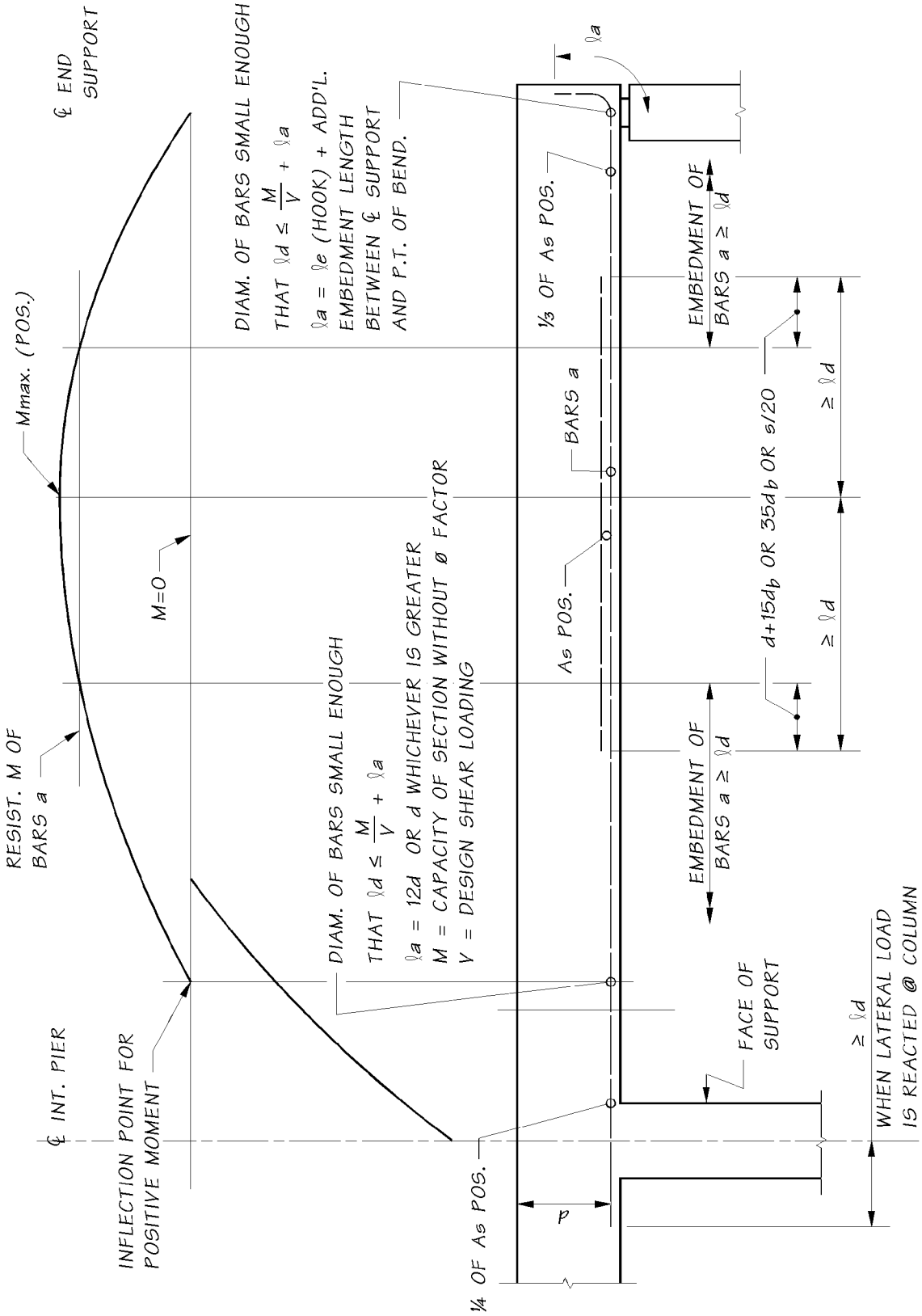

Appendix 5.3-A2 Negative Moment Reinforcement

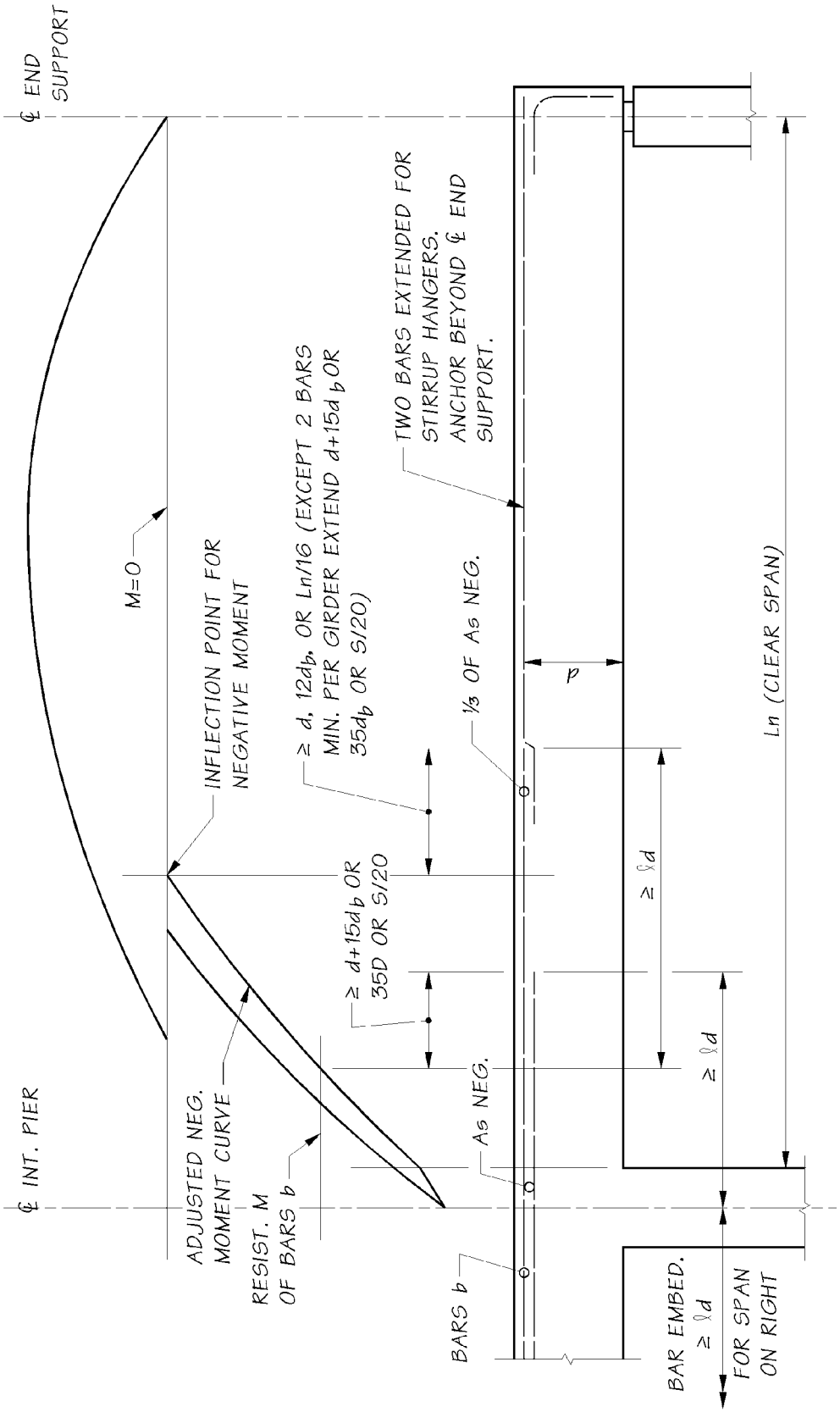

Appendix 5.3-A3 Adjusted Negative Moment Case I (Design for M at Face of Support)

CASE I (DESIGN FOR M AT FACE OF EFFECTIVE SUPPORT) APPLIES TO GIRDERS, BEAMS OR X-BEAMS WHERE THE SUPPORT INCREASES THE DEPTH OF THE BEAM EXCEPT FOR CASES WHERE:

1. THE INCREASE IN DEPTH DUE TO THE SUPPORT IS INSUFICIENT TO RESIST THE MOMENT AT ℄ SUPPORT; THAT IS
   $d℄ < dface \frac{M\ ¼\ PT.}{Mface}$
2. CONTINUOUS BEAMS WHERE ONE-HALF THE LENGTH OF SUPPORT DIVIDED BY THE SPAN IS GREATER THAN 0.1:($\frac{W/2}{SPAN} > 0.1$)

WHERE CASE 1. OR 2. APPLIES USE CASE II.

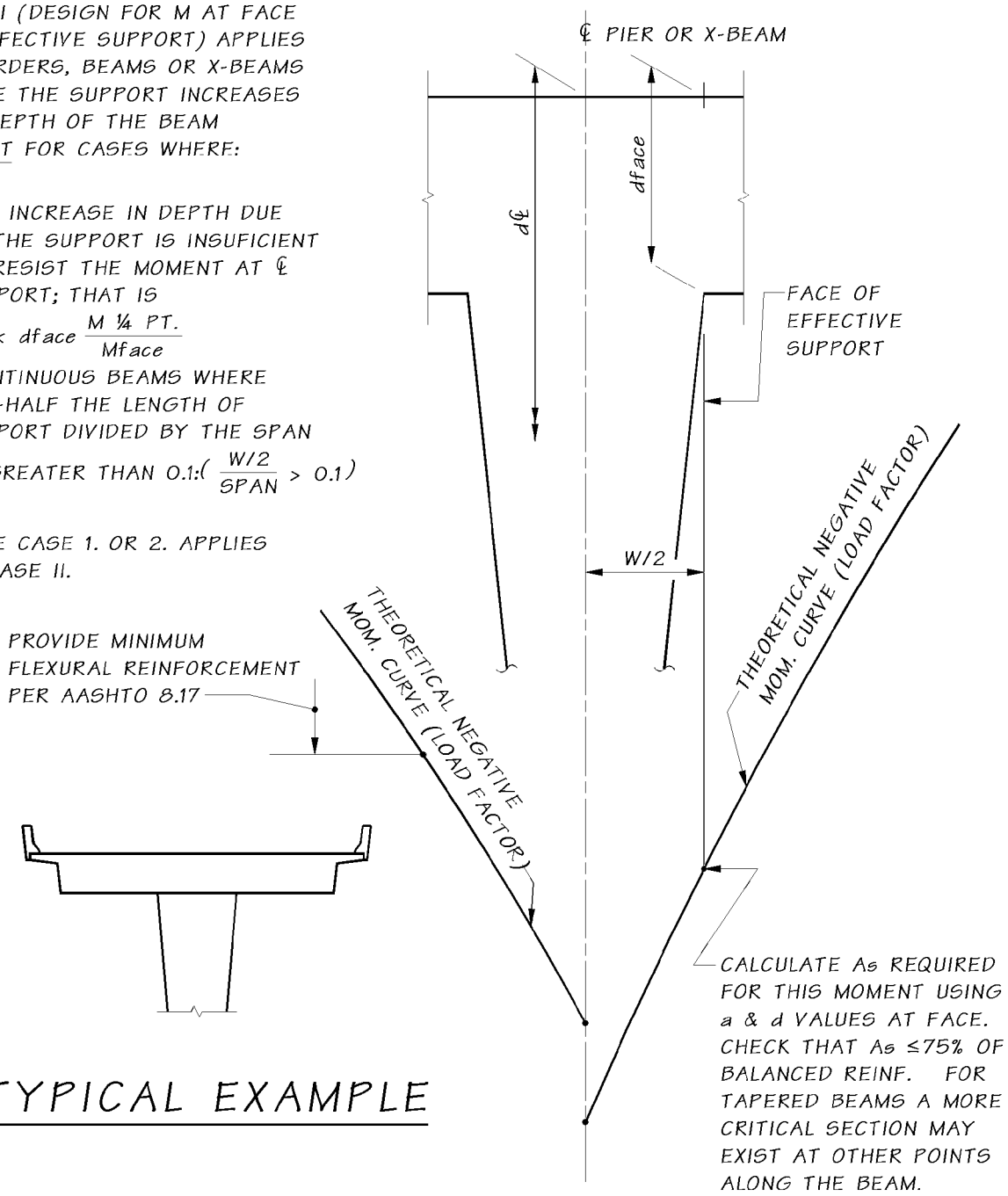

TYPICAL EXAMPLE

Appendix 5.3-A4 Adjusted Negative Moment Case II (Design for M at 1/4 Point)

CASE II (DESIGN FOR M ½ POINT OF SUPPORT) APPLIES TO GIRDERS, BEAMS, OR X-BEAMS WHERE ONE OF THE FOLLOWING SUPPORT CONDITIONS EXIST:

1. NO INCREASE IN BEAM DEPTH CAN BE ATTRIBUTED TO THE SUPPORT.
2. THE INCREASE IN DEPTH DUE TO THE SUPPORT IS INSUFICIENT TO RESIST THE MOMENT AT ℄ SUPPORT; THAT IS

   $$d℄ \leq dface \frac{M\ ¼\ PT.}{Mface}$$

3. CONTINUOUS BEAMS WHERE ONE-HALF THE LENGTH OF SUPPORT DIVIDED BY THE SPAN IS GREATER THAN 0.1: $\left(\frac{W/2}{SPAN} > 0.1 \right)$

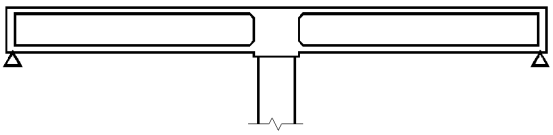

TYPICAL SECTION

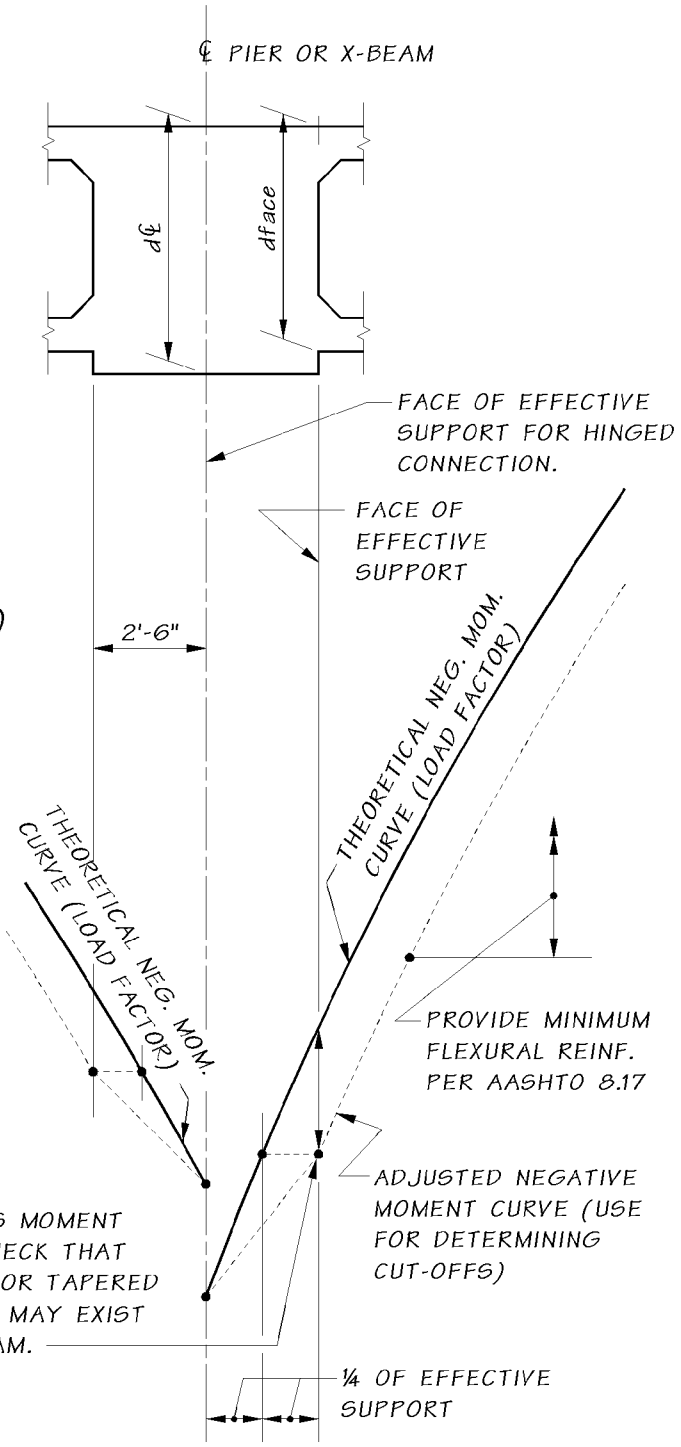

CALCULATE As REQUIRED FOR THIS MOMENT USING a & d VALUES AT FACE. CHECK THAT As ≤ 75% OF BALANCED REINF. FOR TAPERED BEAMS A MORE CRITICAL SECTION MAY EXIST AT OTHER POINTS ALONG THE BEAM.

Appendix 5.3-A5 Cast-In-Place Deck Slab Design for Positive Moment Regions f'_c = 4.0 ksi

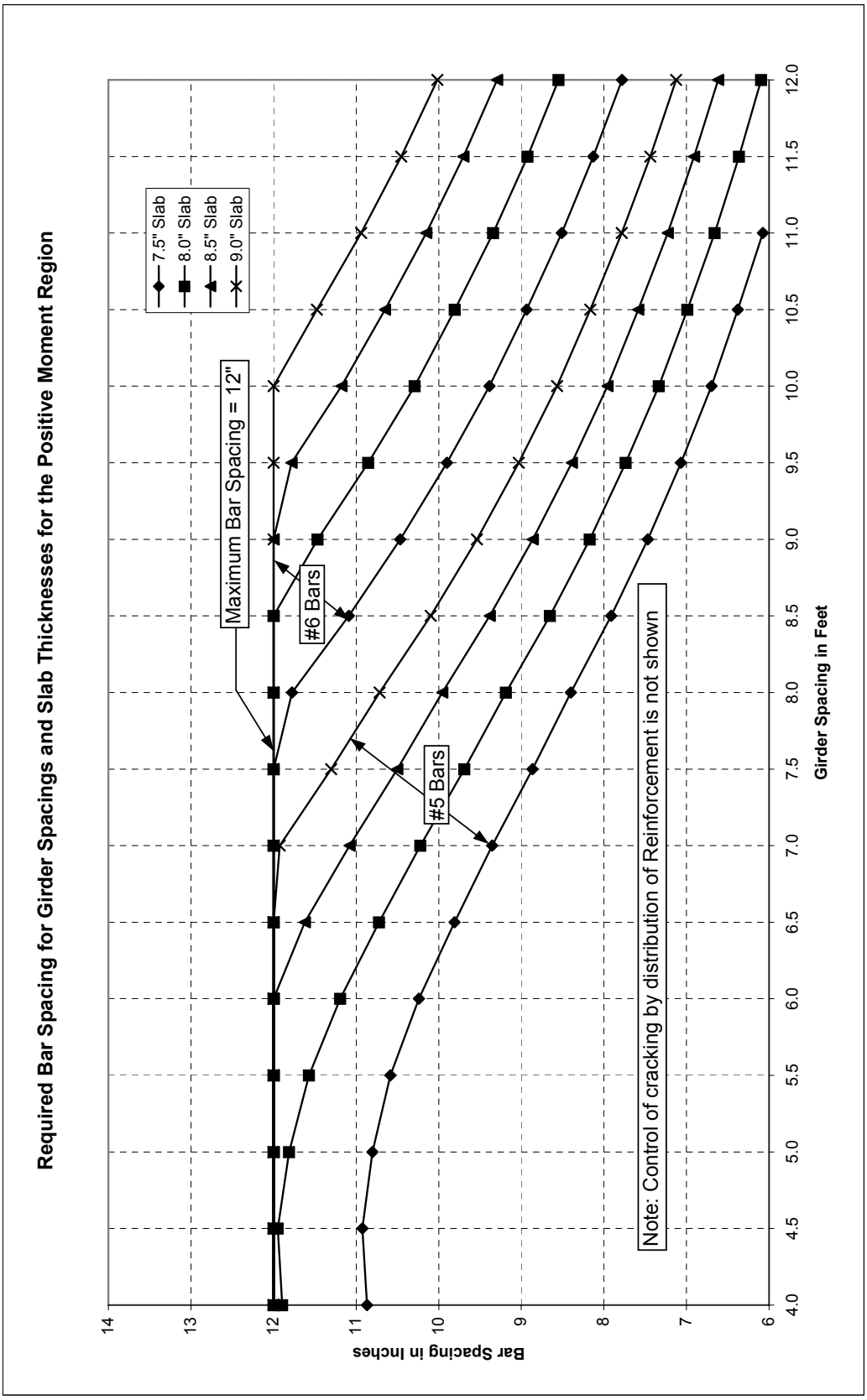

Appendix 5.3-A6 Cast-In-Place Deck Slab Design for Negative Moment Regions f'_c = 4.0 ksi

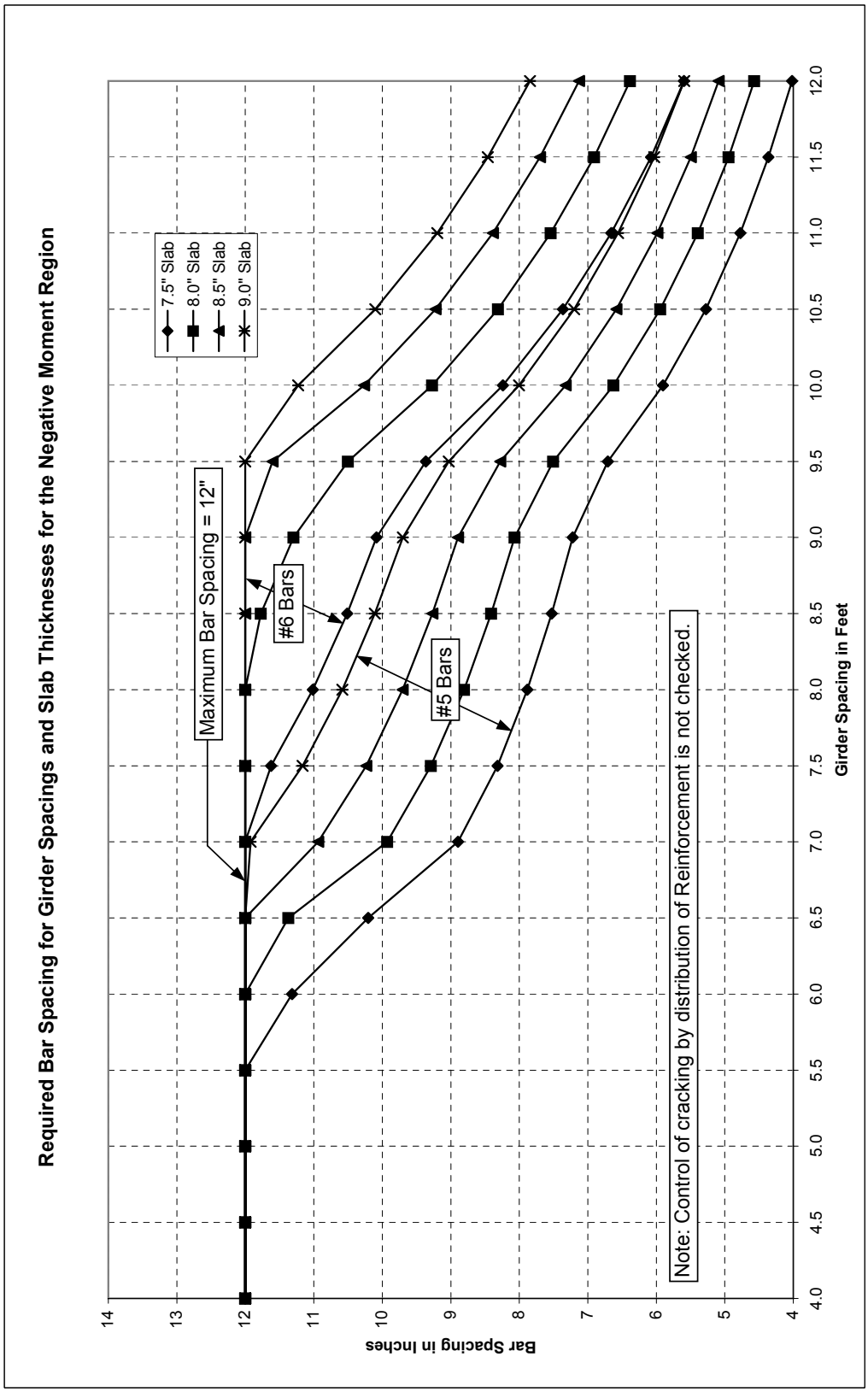

Appendix 5.3-A7 Slab Overhang Design-Interior Barrier Segment

A13.4.1 Design Case 1 Slab Overhang Required Reinforcement for Vehicle Impact–Interior Barrier Segment–LRFD

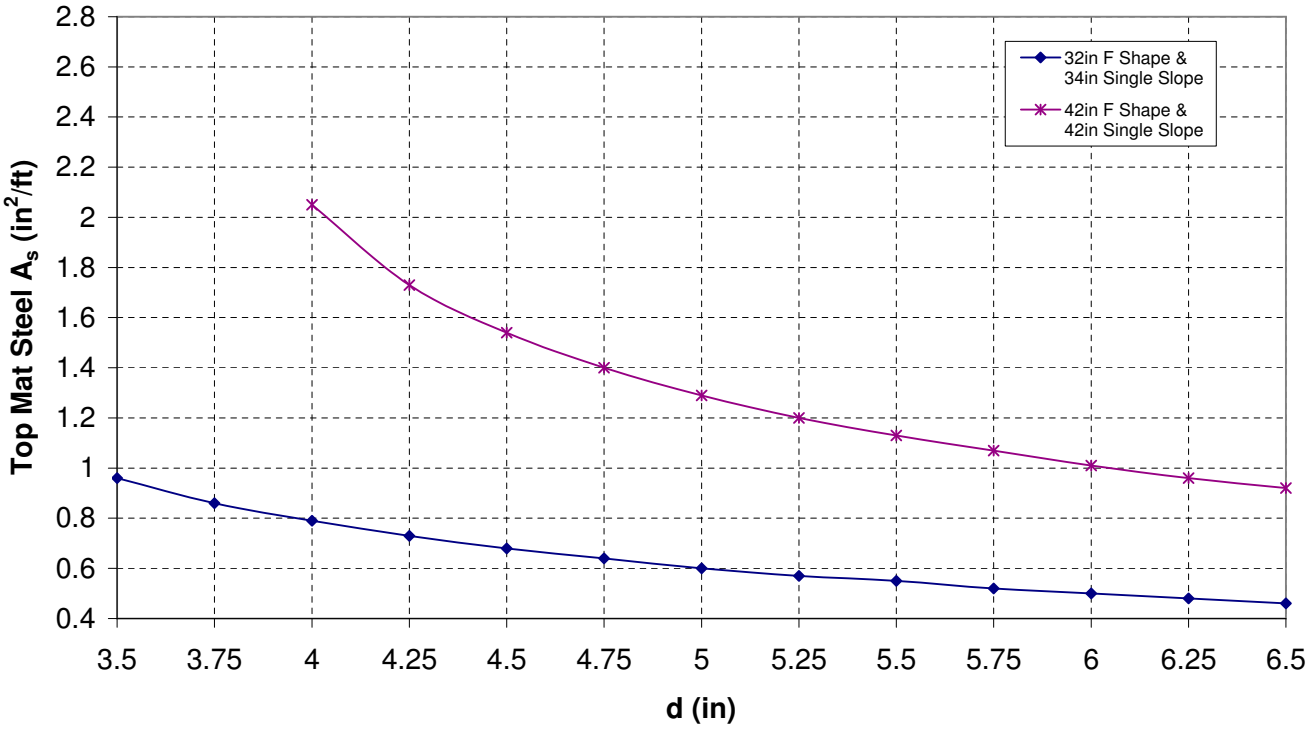

Notes:

1. Top and bottom mats each carry one-half the tension impact load.
2. Only Design Case 1 of LRFD A13.4.1 is considered. Designer must also check Design Cases 2 and 3.
3. Section considered is a vertical section through the slab overhang at the toe of the barrier.

Appendix 5.3-A8 Slab Overhang Design-End Barrier Segment

**Slab Overhang Required Reinforcement for Vehicle Impact–
End Barrier Segment–LRFD A13.4.1 Design Case 1**

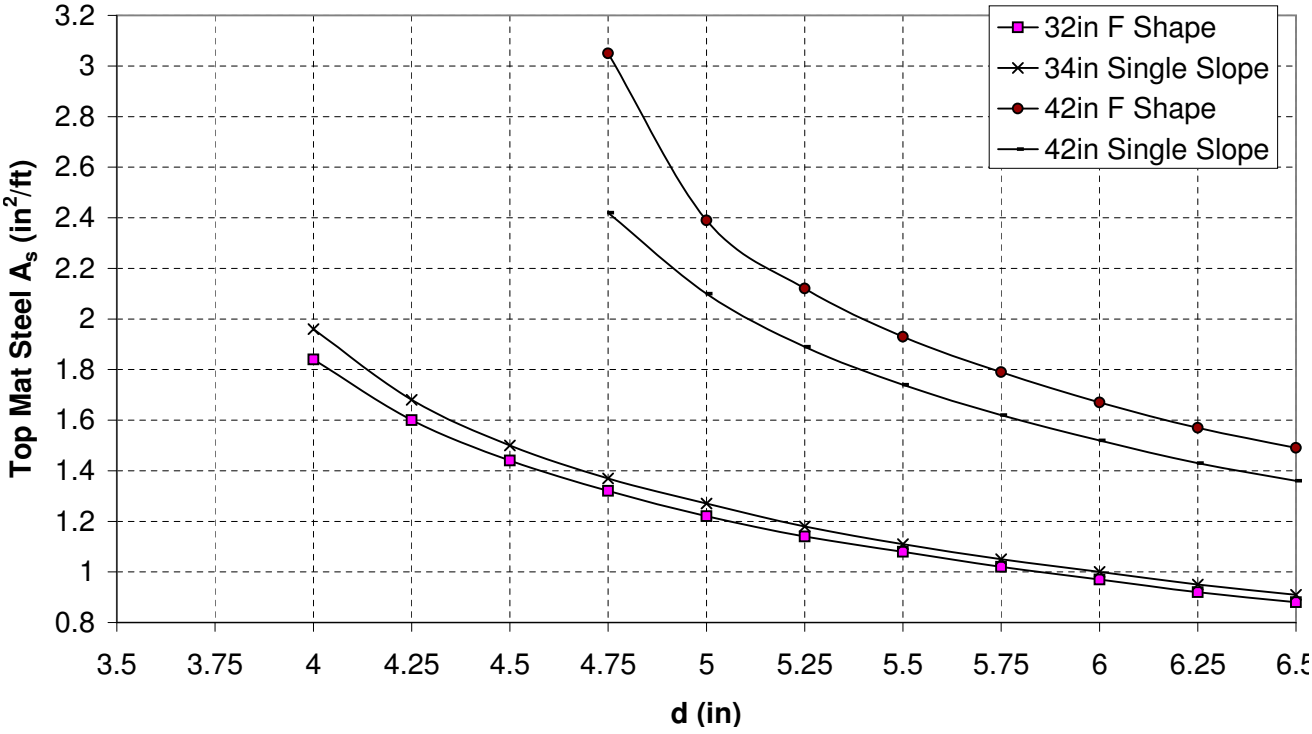

Notes:

1. Top and bottom mats each carry one-half the tension impact load.
2. Only Design Case 1 of LRFD A13.4.1 is considered. Designer must also check Design Cases 2 and 3.
3. Section considered is a vertical section through the slab overhang at the toe of the barrier.

Appendix 5.6-A1-1 Span Capability of W Girders

Girder Type	Girder Spacing (ft)	CL Bearing to CL Bearing (ft)	"A" Dim (in)	Deck Thickness (in)	Shipping Weight (kips)
W42G	5	90	10.75	7.5	40
	6	85	10.25	7.5	38
	7	80	10.75	7.5	36
	8	75	10.50	7.5	33
	9	70	10.50	7.5	31
	10	65	10.00	7.5	29
	11	60	10.00	8.0	25
	12	50	10.25	8.5	23
W50G	5	115	11.00	7.5	71
	6	110	11.25	7.5	68
	7	105	11.25	7.5	65
	8	100	11.25	7.5	62
	9	95	11.25	7.5	59
	10	90	10.75	7.5	56
	11	85	11.25	8.0	53
	12	80	11.25	8.5	50
W58G	5	130	11.25	7.5	92
	6	125	11.25	7.5	89
	7	120	11.25	7.5	85
	8	115	11.50	7.5	82
	9	110	11.50	7.5	78
	10	105	11.50	7.5	75
	11	100	11.75	8.0	71
	12	95	11.75	8.5	68
W74G	5	155	11.25	7.5	131
	6	145	11.50	7.5	127
	7	140	11.50	7.5	122
	8	135	11.75	7.5	118
	9	130	11.50	7.5	114
	10	125	11.50	7.5	110
	11	120	11.75	8.0	105
	12	115	12.25	8.5	101

Design Parameters:

- PG Super Version 6.1
- Girder: f'ci = 7.5 ksi, f'c = 10 ksi
- Slab: f'c = 4 ksi
- No Vertical or Horizontal Curve
- 2% Roadway Crown Slope
- Average Camber > Final Camber
- 42" Single Slope Barrier
- 6% Roadway Superelevation for Shipping Check
- Standard WSDOT Abutment End Type A
- 1 ½" Concrete Overlay or 35 psf HMA Overlay
- Typical Interior Girder

Appendix 5.6-A1-2 Span Capability of WF Girders

Girder Type	Girder Spacing (ft)	CL Bearing to CL Bearing (ft)	"A" Dim (in)	Deck Thickness (in)	Shipping Weight (kips)
WF36G	5	110	11.50	7.5	87
	6	100	12.00	7.5	79
	7	95	12.00	7.5	75
	8	90	11.75	7.5	72
	9	85	11.75	7.5	68
	10	85	11.50	7.5	68
	11	80	11.50	7.5	64
	12	75	11.75	8.0	60
WF42G	5	125	11.75	7.5	107
	6	120	12.25	7.5	103
	7	115	12.25	7.5	99
	8	110	11.75	7.5	94
	9	105	12.25	7.5	90
	10	95	11.50	7.5	82
	11	95	11.50	7.5	82
	12	90	12.00	8.0	78
WF50G	5	135	12.00	7.5	123
	6	135	12.00	7.5	123
	7	130	12.00	7.5	119
	8	125	12.25	7.5	114
	9	120	12.25	7.5	110
	10	115	12.00	7.5	105
	11	110	12.25	7.5	101
	12	100	11.75	8.0	92
WF58G	5	150	11.50	7.5	145
	6	145	10.75	7.5	140
	7	140	11.50	7.5	135
	8	135	12.25	7.5	130
	9	130	12.00	7.5	126
	10	125	11.75	7.5	121
	11	115	12.25	7.5	112
	12	110	12.25	8.0	107
WF66G	5	165	11.25	7.5	168
	6	160	11.50	7.5	163
	7	155	11.50	7.5	158
	8	150	12.00	7.5	153
	9	145	11.50	7.5	148
	10	135	11.75	7.5	138
	11	130	11.75	7.5	133
	12	120	12.50	8.0	123

Girder Type	Girder Spacing (ft)	CL Bearing to CL Bearing (ft)	"A" Dim (in)	Deck Thickness (in)	Shipping Weight (kips)
WF74G	5	175	11.00	7.5	188
	6	170	11.25	7.5	183
	7	165	11.50	7.5	178
	8	160	11.75	7.5	172
	9	155	11.75	7.5	167
	10	145	11.75	7.5	157
	11	135	11.25	7.5	146
	12	130	11.75	8.0	141
WF83G	5	185	11.00	7.5	210
	6	180	10.75	7.5	204
	7	175	11.25	7.5	199
	8	170	11.50	7.5	193
	9	165	11.50	7.5	189
	10	160	11.50	7.5	182
	11	155	11.75	7.5	177
	12	150	12.25	8.0	171
WF95G	5	195	10.50	7.5	238
	6	190	10.75	7.5	232
	7	185	10.75	7.5	226
	8	185	11.00	7.5	226
	9	180	11.25	7.5	220
	10	175	11.50	7.5	214
	11	170	11.50	7.5	208
	12	165	12.00	8.0	202
WF100G	5	205	10.50	7.5	257
	6	200	10.50	7.5	252
	7	195	10.50	7.5	245
	8	190	11.00	7.5	239
	9	185	11.00	7.5	233
	10	180	11.25	7.5	227
	11	175	11.25	7.5	221
	12	170	11.75	8.0	214

Design Parameters:

- PG Super Version 6.1
- Girder: f'ci = 7.5 ksi, f'c = 10 ksi
- Slab: f'c = 4 ksi
- No Vertical or Horizontal Curve
- 2% Roadway Crown Slope
- Average Camber > Final Camber
- 42" Single Slope Barrier
- 6% Roadway Superelevation for Shipping Check
- Standard WSDOT Abutment End Type A
- 1 ½" Concrete Overlay or 35 psf HMA Overlay
- Typical Interior Girder

Appendix 5.6-A1-3 Span Capability of Deck Bulb Tee Girders

Girder Type	Girder Width (ft)	CL Bearing to CL Bearing (ft)	Excess Camber at Diaphragm (in)	Shipping Weight (kips)	Governed by Live Load Deflection
W35DG	4	85	2.249	69	Yes
	5	95	5.007	84	
	6	90	4.756	87	
W41DG	4	110	3.411	93	Yes
	5	110	5.041	101	No
	6	105	5.077	106	Yes
W53DG	4	135	3.879	125	Yes
	5	135	4.067	135	No
	6	130	4.864	141	No
W65DG	4	145	3.17	146	No
	5	150	3.889	163	
	6	145	4.067	169	

Design Parameters:

- PG Super Version 6.1
- Girder: f'ci = 7.5 ksi, f'c = 10 ksi
- Slab: f'c = 4 ksi
- No Vertical or Horizontal Curve
- 2% Roadway Crown Slope
- Average Camber > Final Camber
- 42" Single Slope Barrier
- 6% Roadway Superelevation for Shipping Check
- Standard WSDOT Abutment End Type A
- 1 ½" Concrete Overlay or 35 psf HMA Overlay
- Typical Interior Girder

Appendix 5.6-A1-4 Span Capability of WF Thin Deck Girders

Girder Type	Top Flange Width (ft)	CL Bearing to CL Bearing (ft)	"A" Dim (in)	Shipping Weight (kips)
WF36TDG	5	110	10.75	94
	6	100	11.00	89
	7	90	11.25	85
	8	85	11.25	84
WF42TDG	5	120	11.25	107
	6	115	11.25	107
	7	105	11.75	103
	8	100	11.50	102
WF50TDG	5	140	10.75	132
	6	130	11.75	129
	7	120	12.00	124
	8	110	11.75	119
WF58TDG	5	155	10.50	155
	6	150	11.00	157
	7	135	11.75	147
	8	125	12.00	141
WF66TDG	5	170	10.00	180
	6	165	10.75	181
	7	150	11.75	171
	8	140	12.00	166
WF74TDG	5	180	9.75	200
	6	175	10.75	202
	7	165	11.50	198
	8	155	12.00	192
WF83TDG	5	195	9.50	229
	6	190	10.25	231
	7	180	11.25	226
	8	170	12.00	221

•• **WF95TDG, & WF100TDG** are available but span lengths are shorter then WF83TDG due to Hauling

Design Parameters:

- PG Super Version 6.1
- Girder: f'ci = 7.5 ksi, f'c = 10 ksi
- Slab: f'c = 4 ksi
- No Vertical or Horizontal Curve
- 2% Roadway Crown Slope
- Slab 7" CIP
- Average Camber > Final Camber
- 42" Single Slope Barrier
- 6% Roadway Superelevation for Shipping Check
- Standard WSDOT Abutment End Type A
- 1 ½" Concrete Overlay or 35 psf HMA Overlay
- Typical Interior Girder
- ½ D40 ≥ C

Appendix 5.6-A1-5 Span Capability of WF Deck Girders

Girder Type	Top Flange Width (ft)	CL Bearing to CL Bearing (ft)	Shipping Weight (kips)
WF39DG	5	115	127
	6	110	133
	7	100	132
	8	95	136
WF45DG	5	130	149
	6	125	156
	7	115	156
	8	110	161
WF53DG	5	145	174
	6	140	182
	7	130	183
	8	125	190
WF61DG	5	160	200
	6	155	210
	7	145	212
	8	140	220
WF69DG	5	175	229
	6	170	240
	7	160	243
	8	155	252
WF77DG	5	185	252
	6	180	#264
	7	175	#275
	8	165	#278

•• **WF86DG, WF98DG, & WF103DG** are available but max length exceeds shipping limits

Shipping Weight over 262 Kips

Design Parameters:

- PG Super Version 6.1
- Girder: f'ci = 7.5 ksi, f'c = 10 ksi
- Slab: f'c = 4 ksi
- No Vertical or Horizontal Curve
- 2% Roadway Crown Slope
- 9" UHPC Joint
- Average Camber > Final Camber
- 42" Single Slope Barrier
- 6% Roadway Superelevation for Shipping Check
- Standard WSDOT Abutment End Type A
- 1 ½" Concrete Overlay or 35 psf HMA Overlay
- Typical Interior Girder
- ½ D40 ≥ C

Appendix 5.6-A1-6 Span Capability of Trapezoidal Tub Girders without Top Flange

Girder Type	Girder Spacing (ft)	CL Bearing to CL Bearing (ft)	"A" Dim (in)	Deck Thickness (in)	Shipping Weight (kips)
U54G4	8	130	10.75	7.5	159
	10	125	11.00	7.5	152
	12	115	10.00	7.5	140
	14	105	9.75	7.5	128
U54G5	9	130	10.00	7.5	169
	11	125	10.75	7.5	163
	13	115	10.25	7.5	150
	15	110	10.50	7.5	143
U66G4*	8	145	10.00	7.5	204
	10	140	10.25	7.5	198
	12	135	10.25	7.5	191
U66G5*	9	150	10.25	7.5	224
	11	140	10.25	7.5	209
	13	135	10.25	7.5	202
	15	130	10.25	7.5	195
U78G4*	8	155	10.00	7.5	249
	10	150	10.00	7.5	241
	12	145	9.75	7.5	233
U78G5*	9	165	10.25	7.5	279#
	11	160	10.25	7.5	270#
	13	150	10.50	7.5	254
	15	145	11.50	7.5	245

Span Capability Exceeds Maximum Ground Shipping Weight of 262 Kips

* Girder exceeds Range of Applicability for Simplified Analysis. Refer to AASHTO Table 4.6.2.2.2b-1 Live Load Distribution Factor for Moment in Interior Beams

Design Parameters:

- PG Super Version 6.1
- Girder: f'ci = 7.5 ksi, f'c = 10 ksi
- Slab: f'c = 4 ksi
- No Vertical or Horizontal Curve
- 2% Roadway Crown Slope
- Average Camber > Final Camber
- 42" Single Slope Barrier
- 6% Roadway Superelevation for Shipping Check
- Standard WSDOT Abutment End Type A
- 1 ½" Concrete Overlay or 35 psf HMA Overlay
- Typical Interior Girder

Appendix 5.6-A1-7 Span Capability of Trapezoidal Tub Girders with Top Flange

Girder Type	Girder Spacing (ft)	CL Bearing to CL Bearing (ft)	"A" Dim (in)	Deck Thickness (in)	Shipping Weight (kips)
UF60G4	9*	145	9.25	8.50	204
	11	135	9.50	8.50	190
	13	130	10.00	8.50	184
	15	125	10.25	8.50	177
UF60G5	10*	145	9.25	8.50	216
	12	135	9.75	8.50	202
	14	130	10.00	8.50	194
	16	125	10.25	8.50	187
UF72G4*	9*	155	9.25	8.50	249
	11*	145	9.75	8.50	233
	13*	140	10.00	8.50	225
	15*	135	10.25	8.50	217
UF72G5*	10*	160#	9.50#	8.50	270#
	12*	155#	10.00#	8.50	262#
	14*	150#	10.00#	8.50	253#
	16*	145	10.00	8.50	245

•• ***UF84G4 & UF84G5*** are available but max spans exceed maximum shipping weight

\# Span Capability Exceeds Maximum Ground Shipping Weight of 252 Kips

* Girder exceeds Range of Applicability for Simplified Analysis. Refer to AASHTO Table 4.6.2.2.2b-1 Live Load Distribution Factor for Moment in Interior Beams

Design Parameters:

- PGSuper Version 3.1.3.1
- Girder f'ci = 7.5 ksi, f'c = 10 ksi
- Slab f'c = 4 ksi
- No verticle or horizontal curve
- 2% roadway crown slope
- 42" Single Slope Barrier
- 6% roadway superelevation for shipping check
- Standard WSDOT Abutment End Type A
- 1 ½" concrete overlay or 35 psf HMA overlay
- Typical interior girder
- 8.5" Deck with the option of using a 3.5" SIP panel with a 5" CIP slab

Appendix 5.6-A1-8 Span Capability of Post-tensioned Spliced I-Girders

f'ci = 6.0 ksi, f'c = 9 ksi Strand diameter = 0.6" Grade 270 ksi low relaxation												
Girder Type	Girder Spacing (ft)	Span Length (ft)	Cast-in-place Closures	PT Ducts - Strands/Duct (Duct#4 @ Bottom)				Jacking Force** (kips)	Tendon Force after Seating** (kips)	Tendson Loss* (kips)	E1 (in)	E3 (in)
			Length (ft)	1	2	3	4					
WF74PTG Post-tensioned Before Slab Casting	6	170	2	-	22	22	22	2970	2680	730	36.4	12.7
	8	155	2	-	22	22	22	2970	2670	740	36.4	12.7
	10	140	2	-	22	22	22	2970	2650	760	36.4	12.7
	12	120	2	-	22	22	22	2970	2630	780	36.4	12.7
	14	100	2	-	22	22	22	2970	2590	815	36.4	12.7
WF74PTG Post-tensioned After Slab Casting	6	195	2	-	22	22	22	2960	2690	680	36.4	12.7
	8	185	2	-	22	22	22	2960	2710	680	36.4	12.7
	10	175	2	-	22	22	22	2960	2690	690	36.4	12.7
	12	165	2	-	22	22	22	2990	2720	700	36.4	12.7
	14	155	2	-	22	22	22	3020	2750	710	36.4	12.7
WF83PTG Post-tensioned Before Slab Casting	6	185	2	11	22	22	22	3500	3160	850	33.8	14.5
	8	165	2	-	22	22	22	2985	2710	720	36.4	12.7
	10	155	2	-	22	22	22	2985	2700	730	36.4	12.7
	12	135	2	-	22	22	22	2985	2680	740	36.4	12.7
	14	115	2	-	22	22	22	2985	2620	810	33.8	12.7
WF83PTG Post-tensioned After Slab Casting	6	*205	2	11	22	22	22	3500	3200	810	33.8	14.5
	8	200	2	11	22	22	22	3500	3210	800	37.6	14.5
	10	195	2	22	22	22	22	4000	3640	940	37.6	15.7
	12	185	2	22	22	22	22	4000	3640	940	37.6	15.7
	14	175	2	22	22	22	22	4000	3640	940	37.6	15.7
WF95PTG Post-tensioned Before Slab Casting	6	200	2	11	22	22	22	3500	3150	860	46.1	14.5
	8	185	2	11	22	22	22	3500	3110	980	46.1	14.5
	10	175	2	11	22	22	22	3500	3130	880	46.1	14.5
	12	155	2	8	22	22	22	3360	2990	860	44.9	14.1
	14	135	2	-	22	22	22	3000	2630	810	59.0	12.7
WF95PTG Post-tensioned After Slab Casting	6	235	2	11	22	22	22	3500	3210	800	46.1	14.5
	8	230	2	22	22	22	22	4000	3650	930	37.6	15.7
	10	215	2	22	22	22	22	4000	3640	940	37.6	15.7
	12	205	2	22	22	22	22	4000	3640	950	37.6	15.7
	14	190	2	22	22	22	22	4000	3630	960	37.6	15.7

* Controlled by over-reinforced section (see LRFD Sec. 5.7.3.3)

** Total force calculated at jacking end of post-tensioned girder (rounded to the nearest 10)

Design Parameters:

- PGSplice V. 0.3
- WSDOT BDM LRFD design criteria
- No vertical or horizontal curve
- 2.0 percent roadway crown slope
- Interior girder with barrier load (6 girder bridge)
- Only flexural service and strength checked; lifting and hauling checks not necessarily satisfed
- Simple girder span lengths are CL bearing to CL bearing
- Slab f'_c = 4.0 ksi
- Standard WSDOT “F” shape barrier
- Under normal exposure condition and 75 percent relative humidity
- Spans reported in 5′-0″ increments
- Designs based on “normally” reinforced sections (c/de < 0.42 LRFD 5.7.3.3)
- Designs based on 22 strands/duct
- For 6′-10′ girder spacing -- 7.5″ slab
- For 12′ girder spacing -- 8.0″ slab
- For 14′ girder spacing -- 8.75″ slab
- Girders post-tensioned before slab pour are assumed to be post-tensioned adjacent to structure.
- All spec checks at wet joints have been ignored. It isassumed that the designer can modify the wet joints to reach the required span as shown in the table. These modifcations are outside the scope of this table.

Appendix 5.6-A1-9 Span Capability of Post-tensioned Spliced Tub Girders

Girder Type	Girder Spacing (ft)	Span Length (ft)	End Segments	Middle Segment	Spliced Post-tensioned Girder								
			No. of Straight Strands	No. of Straight Strands	PT Ducts ~ Strands/Duct (Duct #4 @ Bottom)				Jacking Force* (kips)	Tendon Force after Seating* (kips)	Tendon Loss* (kips)	E1 (in)	E3 (in)
					1	2	3	4					
U54PTG4	8	135	4	6	-	-	11	22	2904	2636	570	20.0	8.9
	14	150	4	14	-	2	22	22	4048	3708	760	31.5	10.1
U54PTG5	9	135	4	8	-	-	12	22	2992	2764	578	19.7	9.0
	15	150	4	14	-	6	22	22	4400	4032	826	29.8	10.9
U54PTG6	10	135	4	6	-	-	18	22	3520	3200	684	18.3	9.5
	16	145	4	14	-	8	22	22	4576	4196	852	29.0	11.2
U66PTG4	8	155	4	8	-	-	15	22	3256	2944	648	18.9	9.3
	14	170	4	16	-	7	22	22	4488	4088	864	29.4	11.0
U66PTG5	9	155	4	8	-	-	17	22	3432	3110	678	18.5	9.4
	15	170	4	16	-	10	22	22	4752	4334	910	29.3	11.3
U66PTG6	10	155	4	8	-	-	21	22	3784	3434	742	17.7	9.7
	16	165	4	14	-	12	22	22	4928	4500	940	27.7	11.7
U78PTG4	8	175	4	10	-	-	19	22	3608	3262	722	18.1	9.6
	16	190	4	20	-	15	22	22	5192	4718	1014	26.8	12.1
U78PTG5	9	180	4	10	-	2	22	22	4048	3692	776	31.5	10.1
	17	195	4	22	-	21	22	22	5720	5202	1110	25.2	12.6
U78PTG6	10	180	4	10	-	6	22	22	4400	4018	840	29.8	10.9
	18	190#	4	20	2	22	22	22	5896	5400	1104	395.0	12.9

Total force calculated at jacking end of post-tensioned girder

Span capability exceeds maximum shipping weight of 200 kips

Design Parameters:

- PGSplice V. 0.3
- WSDOT BDM LRFD design criteria
- No vertical or horizontal curve
- 2.0 percent roadway crown slope
- Interior girder with barrier load (6 girder bridge)
- Only flexural service and strength checked; lifting and hauling checks not necessarily satisfied
- Simple girder span lengths are CL bearing to CL bearing
- Standard WSDOT “F” shape barrier
- Under normal exposure condition and 75 percent humidity
- Spans reported in 5′-0″ increments
- “A” dimension = deck thickness + 2″
- Closure pour for spliced girders is 2′, f'_{ci} = 6.0 ksi, f'_c = 9 ksi
- Girder f'_{ci} = 6.0 ksi, f'_c = 9.0 ksi, slab f'_c = 4.0 ksi
- Girders are spliced in-place after slab is cast
- Prestressing and post-tensioning steel is 0.6″ diameter, Grade 270
- End segments are 25 percent of total length; center segment is 50 percent of total length
- Range of applicability requirements in LRFD ignored; span lengths may be longer than allowed by LRFD
- Designs are based on a 22 diameter strand limit per 4″ duct for high pressure grout
- All spec checks at wet joints have been ignored. It is assumed that the designer can modify the wet joints to reach the required span as shown in the table. These modifications are outside the scope of this table.

Appendix 5.6-A1-10 Span Capability of WF Girders with Lighweight Concrete

Table 1. No girder sag present in the final condition

Girder Type	Girder Spacing (ft)	CL Bearing to CL Bearing (ft)	"A" Dim (in)	Deck Thickness (in)	Shipping Weight (kips)
WF74G	5	180	12.00	7.5	162
	6	175	12.00	7.5	158
	7	170	12.25	7.5	153
	8	165	12.00	7.5	149
	9	160	12.25	7.5	144
	10	155	12.25	7.5	140
WF83G	5	190	11.75	7.5	181
	6	185	12.25	7.5	176
	7	180	12.25	7.5	171
	8	175	12.00	7.5	167
	9	170	12.50	7.5	162
	10	165	12.25	7.5	157
WF95G	5	205	12.00	7.5	216
	6	200	12.00	7.5	204
	7	195	12.00	7.5	199
	8	190	12.25	7.5	194
	9	185	12.00	7.5	189
	10	180	12.25	7.5	184
WF100G	5[1]	215	11.75	7.5	230
	6[1]	210	10.50	7.5	224
	7	205	11.75	7.5	216
	8	200	11.75	7.5	211
	9	195	12.00	7.5	206
	10	190	12.00	7.5	200

1. 4’-7” wide top flange to satisfy lateral slenderness requirements

Design Parameters:

- PG Super Version 6.1
- Girder: f’ci = 7.5 ksi, f’c = 10 ksi
- Slab: f’c = 4 ksi
- No Vertical or Horizontal Curve
- 2% Roadway Crown Slope
- Average Camber > Final Camber
- Lightweight Concrete Girders
- Normal Concrete Deck
- 42” Single Slope Barrier
- 6% Roadway Superelevation for Shipping Check
- Standard WSDOT Abutment End Type A
- 1 ½” Concrete Overlay or 35 psf HMA Overlay
- Typical Interior Girder
- ½ D40 ≥ C, i.e no sag
- Concrete Unit Weight: 0.128 kip/ft^3
- Concrete w/ Reinf. Unit Weight: 0.138 kip/ft^3

Table 2. Potential girder sag allowed in the final condition

Girder Type	Girder Spacing (ft)	CL Bearing to CL Bearing (ft)	"A" Dim (in)	Deck Thickness (in)	Shipping Weight (kips)
WF74G	5	190	10.75	7.5	171
	6	180	11.25	7.5	162
	7	175	11.75	7.5	158
	8	170	11.75	7.5	153
	9	165	12.00	7.5	149
	10	155	12.25	7.5	140
WF83G	5	200	10.75	7.5	190
	6	195	11.00	7.5	185
	7	190	11.25	7.5	181
	8	180	11.75	7.5	171
	9	175	12.00	7.5	167
	10	170	12.25	7.5	162
WF95G	5[1]	220	10.00	7.5	224
	6[1]	210	10.25	7.5	214
	7	205	10.75	7.5	209
	8	195	11.25	7.5	199
	9	190	11.75	7.5	194
	10	180	12.00	7.5	189
WF100G	6[2]	220	9.25	7.5	231
	7[1]	215	9.50	7.5	226
	8	205	9.75	7.5	216
	9	200	10.00	7.5	211
	10	195	10.25	7.5	206

1. 4’-7” wide top flange to satisfy lateral slenderness requirements
2. 5’-1” wide top flange to satisfy lateral slenderness requirements

Design Parameters:

- PG Super Version 6.1
- Girder: f’ci = 7.5 ksi, f’c = 10 ksi
- Slab: f’c = 4 ksi
- No Vertical or Horizontal Curve
- 2% Roadway Crown Slope
- Lightweight Concrete Girders
- Normal Concrete Deck
- Girders at this span length may end up with a sag in the final condition. Precamber may be required.
- 42” Single Slope Barrier
- 6% Roadway Superelevation for Shipping Check
- Standard WSDOT Abutment End Type A
- 1 ½” Concrete Overlay or 35 psf HMA Overlay
- Typical Interior Girder
- Concrete Unit Weight: 0.128 kip/ft^3
- Concrete w/ Reinf. Unit Weight: 0.138 kip/ft^3

5.99 References

1. AASHTO LRFD *Bridge Construction Specifications*, Current Edition, AASHTO, Washington, D.C.
2. Seguirant, S.J., "New Deep WSDOT Standard Sections Extend Spans of Prestressed Concrete Girders," PCI JOURNAL, V. 43, No. 4, July-August 1998, pp. 92-119.
3. PCI *Bridge Design Manual*, Precast/Prestressed Concrete Institute, Chicago, IL, 1997.
4. ACI 318-02, Building Code Requirements for Reinforced Concrete and Commentary, American Concrete Institute, 1989, pp.353.
5. Hsu, T. T. C., Torsion of Reinforced Concrete, Van Nostrand Reinhold Co., New York, 1st Ed., 1984, 516 pp.
6. Collins, M. P. and Mitchell, D., Shear and Torsion Design of Prestressed and Non-Prestressed Concrete Beams, PCI Journal, September-October, 1980, pp. 32-100.
7. Mirza, S.A., and Furlong, R.W., Design of Reinforced and Prestressed Concrete Inverted T Beams for Bridge Structures, PCI Journal, Vol. 30, No. 4, July-August 1985, pp. 112-136.
8. Rabbat, B.G., Reader Comments Design of Reinforced and Prestressed Concrete inverted T Beams for Bridge Structures, PCI Journal, Vol. 31, No. 3, May-June 1986, pp. 157-163.
9. ACI Committee 345, Guide for Widening Highway Bridges, ACI Structural Journal, July/August, 1992, pp. 451-466.
10. PCI Design Handbook, Precast and Prestressed Concrete, Sixth Edition, Precast/Prestressed Concrete Institute, Chicago, IL, 2004.
11. Mast, R.F., "Lateral Stability of Long Prestressed Concrete Beams, Part 1," PCI JOURNAL, V. 34, No. 1, January-February 1989, pp. 34-53.
12. Mast, R.F., "Lateral Stability of Long Prestressed Concrete Beams, Part 2," PCI JOURNAL, V. 38, No. 1, January-February 1993, pp. 70-88.
13. Imper, R.R., and Laszlo, G., "Handling and Shipping of Long Span Bridge Beams," PCI JOURNAL, V. 32, No. 6, November-December 1987, pp. 86-101.
14. Manual for the Evaluation and Repair of Precast, Prestressed Concrete Bridge Products, Precast/Prestressed Concrete Institute, Chicago, IL, 2006.
15. Transportation Research Board Report No. 226 titled, Damage Evaluation and Repair Methods for Prestressed Concrete Bridge Members.
16. Transportation Research Board Report No. 280 titled, Guidelines for Evaluation and Repair of Prestressed Concrete Bridge Members.
17. *Post-tensioned Box Girder Bridge Manual*, FHWA-HIF-15-016, 2016.
18. Prestressed Concrete Structures T. Y. Lin, Wiley.
19. Prestressed Concrete Vol. I and II, Guyon, Wiley
20. Design of Concrete Bridges for Temperature Gradients, ACI Journal, May 1978.

21. Mast, R. F., “Unified Design Provisions for Reinforced and Prestressed Concrete Flexural and Compression Members”, ACI Structural Journal, V. 89, No. 2, March-April 1992, pp. 185-199. See also discussions by R.K. Devalapura and M.K. Tadros, C.W. Dolan and J.V. Loscheider and closure to discussions in V. 89, No. 5, September-October 1992, pp. 591-593.

22. Weigel, J.A., Seguirant, S.J., Brice, R., and Khaleghi, B., “High Performance Precast, Prestressed Concrete Girder Bridges in Washington State,” PCI JOURNAL, V. 48, No. 2, March-April 2003, pp. 28-52.

23. Seguirant, S. J., Brice, R., and Khaleghi, B., “Flexural Strength of Reinforced and Prestressed Concrete T-Beams,” PCI JOURNAL, V. 50, No. 1, January-February 2005, pp 44-73.

24. TRAC Report WA-RD 696.1, "Effect of Intermediate Diaphragms to Prestressed Concrete Bridge Girders in Over-Height Truck Impacts” completed on April 2008 by the Washington State University.

25. NCHRP Report 628, “Self-Consolidating Concrete for Precast, Prestressed Concrete Bridge Elements”, NCHRP Project 18-12, Transportation Research Board, 2009.

26. PCI Publication CB-02-16-E, “Recommended Practice for Lateral Stability of Precast, Prestressed Concrete Bridge Girders”, First Edition, Precast/Prestressed Concrete Institute, February 2016.

27. Chapman, D., “WSDOT Girder Stirrup Hat Bar Test,” Concrete Technology Corporation, 2012.

6.0 Structural Steel 6-1
6.0.1 Introduction 6-1
6.0.2 Special Requirements for Steel Bridge Rehabilitation or Modification 6-1
6.0.3 Retrofit of Low Vertical Clearance Truss Portal and Sway Members 6-1
6.1 Design Considerations 6-6
6.1.1 Codes, Specification, and Standards 6-6
6.1.2 WSDOT Steel Bridge Practice 6-7
6.1.3 Preliminary Girder Proportioning 6-8
6.1.4 Estimating Structural Steel Weights 6-9
6.1.5 Bridge Steels 6-10
6.1.6 Plate Sizes 6-11
6.1.7 Girder Segment Sizes 6-11
6.1.8 Computer Programs 6-12
6.1.9 Fasteners 6-12
6.1.9.A ASTM F 3125 GR A325 & GR F1852 6-13
6.1.9.B ASTM A449 6-13
6.1.9.C F1554 – Grade 105 6-13
6.1.9.D ASTM F 3125 GR A490 & GR F2280 6-13
6.1.9.E A354–Grade BD 6-13
6.1.10 Bending Steel 6-14
6.2 Girder Bridges 6-15
6.2.1 General 6-15
6.2.2 I-Girders 6-15
6.2.3 Tub or Box Girders 6-16
6.2.4 Fracture Critical Superstructures 6-17
6.3 Design of I-Girders 6-18
6.3.1 Limit States for AASHTO LRFD Bridge Design Specifications 6-18
6.3.2 Composite Section 6-18
6.3.3 Flanges 6-18
6.3.4 Webs 6-19
6.3.5 Transverse Stiffeners 6-19
6.3.6 Longitudinal Stiffeners 6-20
6.3.7 Bearing Stiffeners 6-20
6.3.8 Cross Frames 6-20
6.3.9 Bottom Laterals 6-23
6.3.10 Bolted Field Splice for Girders 6-24
6.3.11 Camber 6-25
6.3.12 Bridge Deck Placement Sequence 6-27

6.3.13 Bridge Bearings for Steel Girders . . . 6-27
6.3.14 Surface Roughness and Hardness . . . 6-27
6.3.15 Welding . . . 6-29
6.3.16 Shop Assembly . . . 6-30
6.4 Plan Details . . . 6-31
6.4.1 General . . . 6-31
6.4.2 Structural Steel Notes . . . 6-31
6.4.3 Framing Plan . . . 6-31
6.4.4 Girder Elevation . . . 6-32
6.4.5 Typical Girder Details . . . 6-32
6.4.6 Cross Frame Details . . . 6-32
6.4.7 Camber Diagram and Bearing Stiffener Rotation . . . 6-33
6.4.8 Bridge Deck . . . 6-33
6.4.9 Handrail Details, Inspection Lighting, and Access . . . 6-33
6.4.10 Box Girder Details . . . 6-34
6.5 Shop Plan Review . . . 6-36
6.6 Painting of Existing Steel Bridges . . . 6-37
6.6.1 General . . . 6-37
6.6.2 Vertical Analysis . . . 6-38
6.6.3 Horizontal Analysis . . . 6-39
6.6.4 Special Considerations . . . 6-41
6.6.4.A Coast Guard . . . 6-41
6.6.4.B Moveable Spans . . . 6-41
6.6.4.C Traffic Control . . . 6-42
6.6.4.D Review of Construction Submittals . . . 6-42
6.6.4.E Structural Steel Repairs . . . 6-42
6.6.5 Quantities and Estimates . . . 6-43
6.7 Corrosion of Steel Foundations and Buried Structures . . . 6-44
6.7.1 Corrosion of Steel Foundations . . . 6-44
6.7.2 Corrosion and Abrasion of Metal Buried Structures . . . 6-45
6.7.2.A Corrosion . . . 6-46
6.7.2.B Steel Structures . . . 6-46
6.7.2.C Aluminum Alloy Structures . . . 6-47
6.7.2.D Alternative Coatings and Mitigation for De-icing Salts . . . 6-49
6.7.2.E Abrasion . . . 6-49
6.8 Bridge Standard Drawings . . . 6-51
6.99 References . . . 6-52

6.0 Structural Steel

6.0.1 Introduction

This chapter primarily covers design and construction of steel plate and box girder bridge superstructures. Because of their limited application, other types of steel superstructures (truss, arch, cable stayed, suspension, etc.) are not addressed except as it relates to retrofit of truss sway and portal frames and for painting of existing steel trusses.

Plate girder bridges are commonly used for river crossings and curved interchange ramps. Typical span lengths range from 150 to 300 feet. Steel girders are also being used where limited vertical clearance requires shallow superstructure depth. They may be set over busy highway lanes with a minimum of disruption and falsework, similar to precast concrete elements. Longitudinal launching of steel framing and transverse rolling of completed steel structures has been done successfully.

English units are the current standard for detailing. Widening or rehabilitation plan units should be consistent with the original.

6.0.2 Special Requirements for Steel Bridge Rehabilitation or Modification

As part of steel bridge rehabilitation or modification, calculations shall be made to demonstrate the adequacy of existing members and connections, with special attention given to fracture critical components such as truss gusset plates. When structural modifications or other alterations result in significant changes in stress level, deficiencies shall also be corrected. A thorough survey of impacted components shall be made to determine section loss due to corrosion or prior modification.

6.0.3 Retrofit of Low Vertical Clearance Truss Portal and Sway Members

A WSDOT internal study and subsequent report titled "*Low Vertical Clearance Truss Bridges: Risk Assessment and Retrofit Mitigation Study*" completed in November, 2017 identifies all the trusses on the WSDOT inventory with vertical clearances less than the current minimum of 16'-6". The report prioritizes the over 60 trusses with substandard vertical clearance for potential retrofit and provides scoping level project cost estimates. The goal is to eventually procure a funding source to gradually begin to retrofit the most vulnerable structures that have the highest risk of being struck with an over-height vehicle causing damage to the structure. Previous over-height vehicle impacts have caused damage ranging from minor distortion of members to as severe as a total collapse similar to the SR 5/712 Skagit River Bridge in 2013.

When through-truss type structures are programed for maintenance, painting, structural retrofit, or barrier/railing rehabilitation projects, the designer should reference the previously mentioned report to determine if the structure is a high priority for consideration of a portal and/or sway raising retrofit. If the structure is in the Priority Group 1 or 2 categories, inquiries should be made with the Region Project Office, the Bridge Asset Management Engineer, and the Steel Specialist to determine if a portal and/or sway retrofit should be added to the project.

Most existing through-truss structures have portal and sway members that form a parabolic shape, where the vertical clearance at the centerline of the bridge is higher than at the left and right truss lines where the portals and sways connect to the main truss members. When a portal and/or sway retrofit is to be performed, a typical retrofit is to remove the entire parabolic portal or sway member, modify the secondary members attached to the portal or sway, and install a new beam with a straight horizontal profile. Alternatively, and because the portal or sway members often have sufficient clearance for a portion of the length, the members can be cut at the 16'-6" height and a short member added to each side in a straight horizontal profile. Examples of each one of these retrofit schemes is shown in Figures 6.0.3-1 and 6.0.3-2, respectively.

Figure 6.0.3-1 Complete Portal Replacement

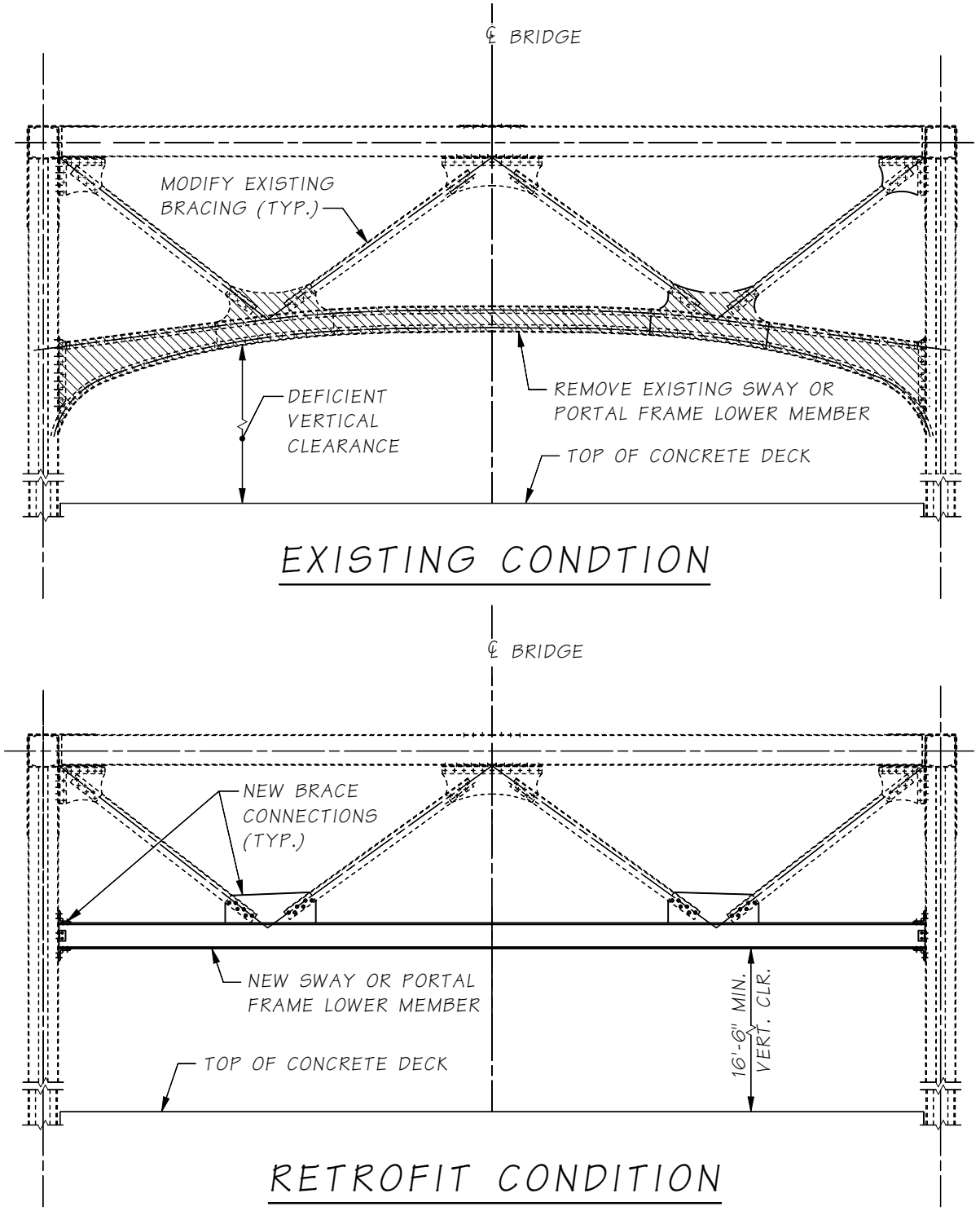

Figure 6.0.3-2 Partial Portal Replacement

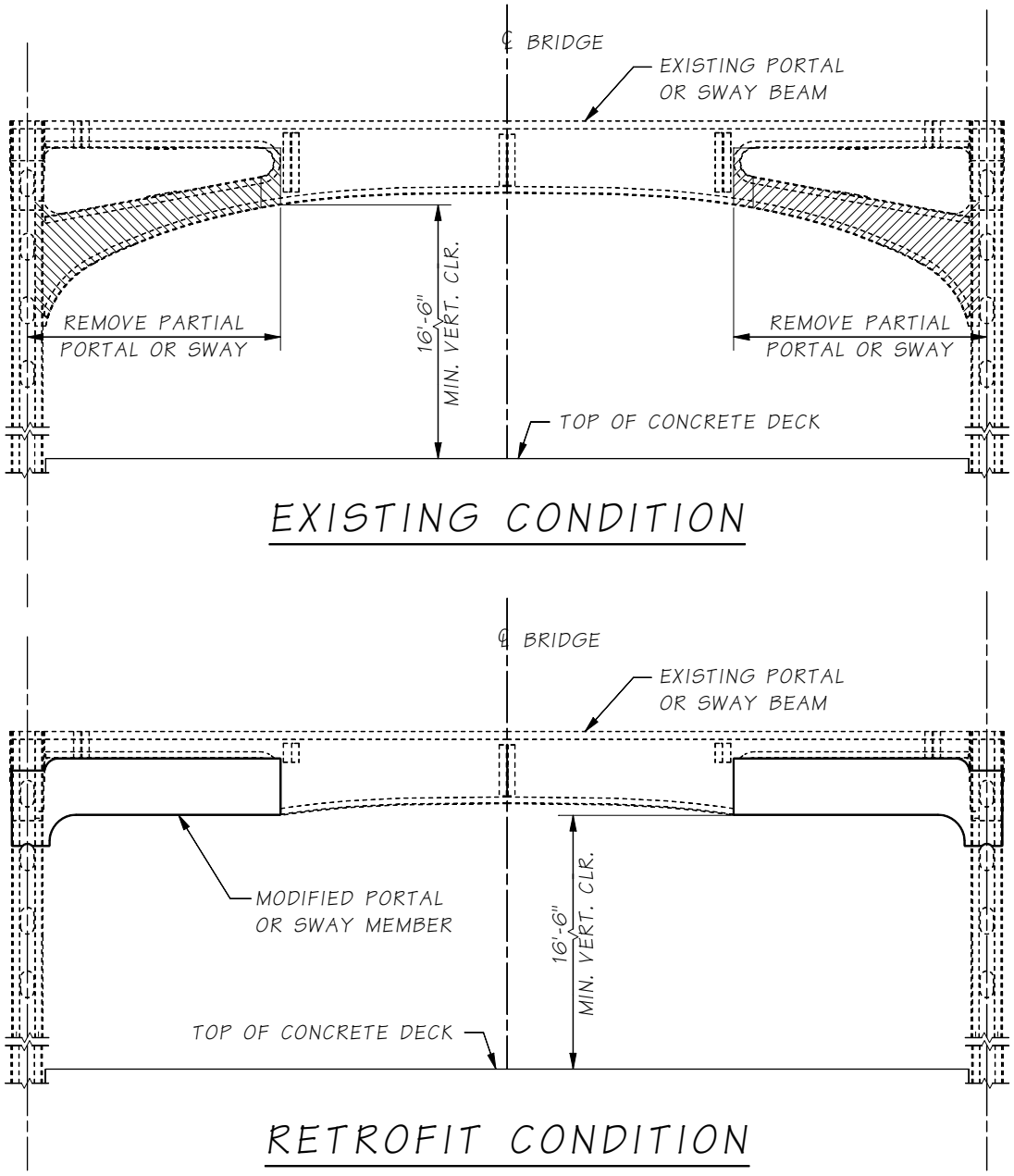

When a portal raising retrofit is being performed, the designer will need to check the end posts on the truss to determine if strengthening of these highly loaded compression members is required. The horizontal portal member acts as a brace point for the end post. The capacity of the member is reduced due to an increase in the unbraced length. When the portal is raised, the distance from the bottom chord connection point to the portal horizontal connection to the end post is increased, thus increasing the unbraced length. In most instances, the end posts are strengthened by adding side plates to the member. These are typically bolted on, but have also been field welded in the past.

A relatively straight forward analysis method for determining the end post retrofit needs is to analyze the existing portal frame with a 2-D model in its existing condition. A unit load can be applied to the upper panel point of the portal frame and a displacement determined. The same analysis is then performed with the portal horizontal member in its raised condition. The section of the end post can be increased by adding steel plate until the deflections for the applied load are the same. The applied load can be the actual calculated lateral wind or seismic load or just a nominal load. This is a relative stiffness comparison analysis so the exact load is not critical. In most cases the boundary conditions for the bottom of the end post can be considered pinned. A more rigorous 3-D analysis with actual wind and seismic loads can always be performed, especially if 3-D models are available due to other retrofit needs. In addition to the lateral analysis of the end posts, the compressive capacity shall also be analyzed and verified to be sufficient in the final condition and during any construction conditions. The construction condition is particularly important if live load will remain on the structure while the existing portal is removed. In this case the unbraced length will be at its longest length (panel point to panel point) and needs to be analyzed to be structurally sufficient during the interim construction conditions. Temporary horizontal bracing has been utilized in the past to provide a temporary brace point on the end post after the existing portal is removed and prior to installation of the new.

The designer should also consider how many portal and/or sway members can be worked on at the same time during construction. In most cases, traffic will still be on the structure during the retrofit project. The stability of the truss must be maintained at all times. Previous retrofit projects determined that requiring every other sway member to remain in place during a retrofit project was sufficient. A 3-D model will likely be required to determine the number of portal and sway members that can be removed at one time.

The State Bridge and Structures Architect and the Region Project Office shall also be consulted during any portal and sway raising projects. Many of the existing trusses are old enough to be on the historic register and changing any visual appearance of the structure may require additional permits or approvals.

6.1 Design Considerations

6.1.1 Codes, Specification, and Standards

Steel highway bridges shall be designed to the following codes and specifications:

- AASHTO *LRFD Bridge Design Specifications* (LRFD-BDS), latest edition
- AASHTO *Guide Specifications for LRFD Seismic Bridge Design* (LRFD-SGS)
- ANSI/AWS A2.4-98 *Standard Symbols for Welding, Brazing, and Nondestructive Examination*

The following codes and specifications shall govern steel bridge construction:

- WSDOT *Standard Specifications for Road, Bridge, and Municipal Construction* (*Standard Specifications*) M 41-10, latest edition
- AASHTO/AWS D1.5M/D1.5: *Bridge Welding Code*, latest edition

The following AASHTO/National Steel Bridge Alliance (NSBA) Steel Bridge Collaboration publications are available to aid in the design and fabrication of steel bridges. These publications can be downloaded from the AASHTO website or a copy can be obtained from the Steel Specialist:

- G1.2-2003, *Design Drawing Presentation Guidelines*
- G12.1-2020, Guidelines *to* Design for Constructability *and Fabrication*
- G1.3-2002, *Shop Detail Drawing Presentation Guidelines*
- S2.1-2018, *Steel Bridge Fabrication Guide Specification*
- S4.1-2019, *Steel Bridge Fabrication QC QA Guidelines*
- G4.2-2021, *Guidelines for the Qualification of Structural Bolting Inspectors*
- G4.4-2006, *Sample Owners Quality Assurance Manual*
- S8.1-2014, *Guide Specification for Application of Coating Systems with Zinc-Rich Primers to Steel Bridges*
- S8.2-2017, *Specification for Application of Thermal Spray Coating Systems to Steel Bridges*
- G13.1-2019, *Guidelines for Steel Girder Bridge Analysis*
- G9.1-2022, *Steel Bridge Bearing Guidelines*
- S10.1-2019, *Steel Bridge Erection Guide Specification*
- G1.4-2006, *Guidelines for Design Details*
- G1.1-2020, *Shop Detail Drawing Review/Approval Guidelines*
- G2.2-2016, *Guidelines for Resolution of Steel Bridge Fabrication Errors*
- G14.1-2021, *Addressing Fatigue Cracking and Details at Risk of Constraint-Induced Fracture*

The *Steel Bridge Design Handbook*, which includes 19 volumes of steel bridge design aids and 6 design examples, was originally produced by US Steel in the 1970s and had previously been maintained by the FHWA. The document has now been taken over by the NSBA and was recently updated in 2021. The update was completed by the FHWA, NSBA, and HDR Engineering. The newly updated documents are also available as design aids and can be downloaded from the NSBA website at the following link: Steel Bridge Design Handbook | American Institute of Steel Construction (aisc.org). These documents are current with the AASTHO Bridge Design Specifications, 9th Edition.

Copies of these publications can be obtained from the Steel Specialist.

- *Bridge Steels and Their Mechanical Properties–Volume 1*
- *Steel Bridge Fabrication–Volume 2*
- *Structural Steel Bridge Shop Drawings–Volume 3*
- *Structural Behavior and Design of Steel–Volume 4*
- *Selecting the Right Bridge Type–Volume 5*
- *Stringer Bridges and Making the Right Choices–Volume 6*
- *Loads and Load Combinations–Volume 7*
- *Structural Analysis–Volume 8*
- *Redundancy–Volume 9*
- *Limit States–Volume 10*
- *Design for Constructability–Volume 11*
- *Design for Fatigue–Volume 12*
- *Bracing System Design–Volume 13*
- *Splice Design–Volume 14*
- *Bearing Design–Volume 15*
- *Substructure Design–Volume 16*
- *Bridge Deck Design–Volume 17*
- *Load Rating of Steel Bridges–Volume 18*
- *Corrosion Protection of Steel Bridges–Volume 19*
- *Design Example: Three-span Continuous Straight Composite Steel I-Girder Bridge*
- *Design Example: Two-span Continuous Straight Composite Steel I-Girder Bridge*
- *Design Example: Two-span Continuous Straight Composite Steel Wide-Flange Beam Bridge*
- *Design Example: Three-span Continuous Curved Composite Steel I-Girder Beam Bridge*
- *Design Example: Three-span Continuous Straight Composite Steel Tub-Girder Bridge*
- *Design Example: Three-span Continuous Curved Composite Steel Tub-Girder Bridge*

6.1.2 WSDOT Steel Bridge Practice

Unshored, composite construction is used for most plate girder and box girder bridges. Shear connectors are placed throughout positive and negative moment regions, for full composite behavior. A minimum of one percent longitudinal deck steel, in accordance with LRFD-BDS Article 6.10.1.7, shall be placed in negative moment regions to ensure adequate deck performance. Additionally, due to cracking observed in some positive moment regions on some recent steel girder structures, the one percent longitudinal deck steel is required to be placed the full length of the bridge. For service level stiffness analysis, such as calculating live load moment envelopes, the bridge deck shall be considered composite and uncracked for the entire bridge length, provided the above methods are used.

For negative moment at strength limit states, the bridge deck shall be ignored while reinforcing steel is included for stress and section property calculations. Where span arrangement is not well balanced, these assumptions may not apply.

Plastic design may be utilized as permitted in the LRFD-BDS.

Currently, economical design requires simplified fabrication with less emphasis on weight reduction. The number of plate thicknesses and splices should be minimized. Also, the use of fewer girder lines, spaced at a maximum of about 14 to 16 feet, saves on fabrication, shipping, painting, and future inspection. Widely spaced girders will have

heavier flanges, hence, greater stability during construction. Normally, eliminating a girder line will not require thickening remaining webs or increasing girder depth. The increased shear requirement can be met with a modest addition of web stiffeners or slightly thicker webs at interior piers.

For moderate to long spans, partially stiffened web design is the most economical. This method is a compromise between slender webs requiring transverse stiffening throughout and thicker, unstiffened webs. Stiffeners used to connect cross frames shall be welded to top and bottom flanges. Jacking stiffeners shall be used adjacent to bearing stiffeners, on girder or diaphragm webs, in order to accommodate future bearing replacement. If solid diaphragms (I-sections) are used at piers and designed for jacking, sufficient access shall be provided for form removal behind the diaphragm. For plate girders, the diaphragm shall be at least 0.75 of the girder depth.

Coordinate jack placement in substructure and girder details. Verify bearing stiffener locations are placed such that jacks can be installed, girders raised, and bearings removed. Proper access should be provided to permit the bearings to be removed and replaced in the future.

Steel framing shall consist of main girders and cross frames. Bottom lateral systems shall only be used when temporary bracing is not practical. Where lateral systems are needed, they shall be detailed carefully for adequate fatigue life.

Standard corrosion protection for steel bridges is the *Standard Specifications* four-coat paint system west of the Cascades and where paint is required for appearance. Unpainted weathering steel shall only be used east of the Cascades. WSDOT does not allow the use of steel stay-in-place deck forms.

6.1.3 Preliminary Girder Proportioning

The superstructure depth is initially determined during preliminary plan development and is based upon the span/depth ratios provided in Chapter 2. The depth may be reduced to gain vertical clearance, but the designer should verify live load deflection requirements are met. See LRFD-BDS Table 2.5.2.6.3-1. Live load deflections shall be limited in accordance with the optional criteria of LRFD-BDS Articles 2.5.2.6.2 and 3.6.1.3.2.

The superstructure depth is typically shown as the distance from the top of the bridge deck to the bottom of the web. Web depths are generally detailed in multiples of 6 inches.

On straight bridges, interior and exterior girders shall be detailed as identical. Spacing should be such that the distribution of wheel loads on the exterior girder is close to that of the interior girder. The number of girder lines should be minimized, with a maximum spacing of 14–16 feet. Steel bridges shall be redundant, with three or more girders lines for I-girders and two or more boxes for box girders, except as otherwise approved by the Steel Specialist and Bridge Design Engineer.

6.1.4 Estimating Structural Steel Weights

For the preliminary quantities or preliminary girder design, an estimate of steel weights for built-up plate composite I-girders can be obtained from Figure 6.1.4-1. This figure is based upon previous designs with AASHTO HS-20 live loads with no distinction between service load designs and load factor designs. This chart also provides a good double check on final quantities.

The weights shown include webs, flanges, and all secondary members (web stiffeners, diaphragms, cross frame, lateral systems, and gusset plates) plus a small allowance for weld metal, bolts, and shear connectors.

Both straight and curved box girder quantities may be estimated with the chart, using a 10 to 20 percent increase.

The chart should only be used for a lower bound estimate of curved I-girder weight. Roadway width and curvature greatly influence girder weight, including cross frames. An additional resource for estimating structural steel weights is the *NSBA Steel Span Weight Curves* published in 2016, which can be obtained off of their website.

Figure 6.1.4-1 Composite Welded Steel Plate "I" Girder

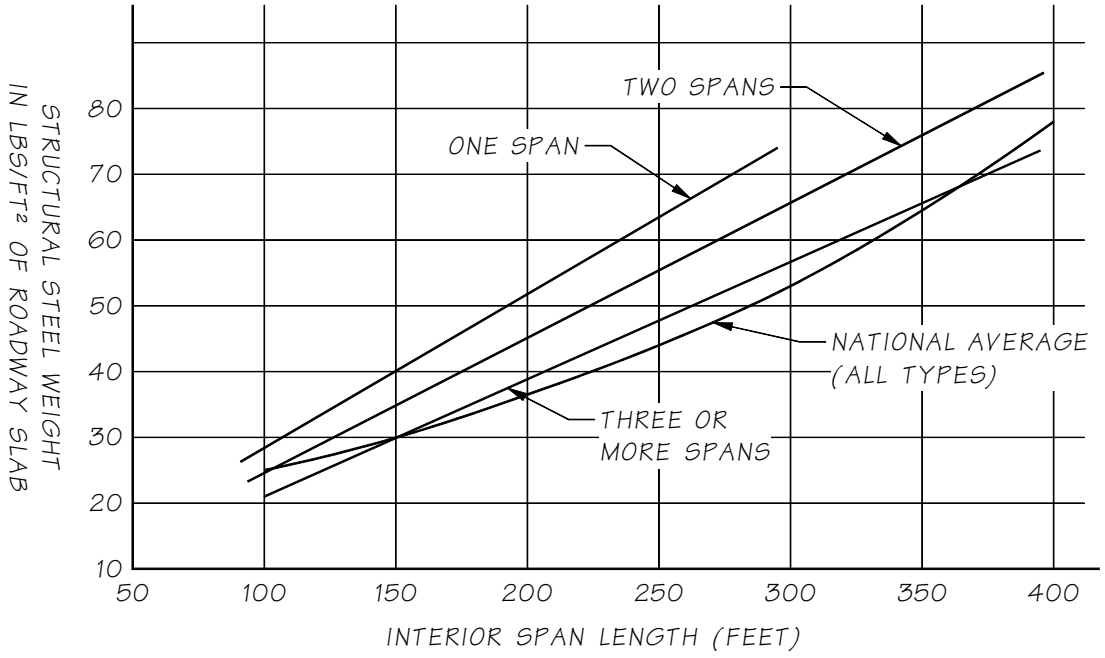

6.1.5 Bridge Steels

Use AASHTO M 270/ASTM A 709 grades 50 or 50W for plate girders and box girders. AASHTO M 270 grades HPS70W and HPS100W may only be used if allowed by the Bridge Design Engineer. HPS70W can be economical if used selectively in a hybrid design. For moderate spans HPS70W could be considered for the bottom flanges throughout and top flanges near interior piers. HPS 50W is no longer readily available and should be avoided.

For wide flange beams, use AASHTO M 270/ASTM A 709 Grade 50S or ASTM A 992. For ancillary members such as expansion joint headers, utility brackets, bearing components or small quantities of tees, channels, and angles, ASTM M 270/ASTM A 709 bridge steels are acceptable but are not required. In these cases, equivalent ASTM designated steels may be used.

The following table shows equivalent designations. Grades of steel are based on minimum yield point.

ASTM	ASTM A 709/AASHTO M 270
A 36	Grade 36
A 572 gr 50	Grade 50
A 992 (W and rolled sections)	Grade 50S
A 588	Grade 50W
---	Grade HPS 70W
---	Grade HPS l00W*

*Minimum yield strength is 90 ksi for plate thickness greater than 2½".

A 992 or 50S steel is most commonly available in W shapes but is also available in other rolled sections including beams (S and M shapes), H-piles, and tees cut from W-shapes. Channels and angles are not readily available in ASTM A992. Angles are often more available in thicknesses that are not an increment of 1/16". For example, if a 5/16" thickness is required for design, it would be appropriate to increase to 3/8" for availability considerations. All the materials in the table are prequalified under the Bridge Welding Code.

All main load-carrying members or components subject to tensile stress shall be identified in the plans and shall meet the minimum Charpy V-notch (CVN) fracture toughness values as specified in LRFD-BDS Table 6.6.2.1-2, temperature zone 2. Fracture critical members or components shall also be designated in the plans.

Availability of weathering steel can be a problem for some sections. For example, steel suppliers do not stock angles or channels in weathering steel. Weathering steel wide flange and tee sections are difficult to locate or require a mill order. A mill order is roughly 10,000 pounds. ASTM A 709 and AASHTO M 270 bridge steels are not typically stocked by local service centers. The use of bridge steel should be restricted to large quantities such as found in typical plate or box girder projects. The older ASTM specification steels, such as A 36 or A 572, should be specified when a fabricator would be expected to purchase from local service centers.

Structural tubes and pipes are covered by other specifications. See the latest edition of the AISC *Manual of Steel Construction* for selection and availability. These materials are not considered prequalified under the Bridge Welding Code. They are covered under the Structural Welding Code AWS D1.1. Structural tubing ASTM A 500 shall not be used for dynamic loading applications. ASTM A 1085 is a newer cold formed and welded HSS section specification that is a Gr 50 steel. Supplements for heat treating and CVNs are included and may also be specified. CVN tests are typically performed in the flats of the HSS square or rectangular tube sections. CVN values in the bend radius of the tubes may be lower than values obtained in the flats, however recent informational testing has shown the CVN values in the corners meet or exceeds the requirements for FCM steels in temperature zone 2. Heat treating of the sections can improve the values, but no data is currently available. ASTM A 1085 should not be specified for dynamic loading applications until further data is available. The designer should check with suppliers to ensure the size and quantities are readily available. In some cases minimum tonnage or bundle quantities is required in order to obtain HSS sections in ASTM A 1085. Consult with the Steel Specialist for more information.

6.1.6 Plate Sizes

Readily available lengths and thicknesses of steel plates should be used to minimize costs. Tables of standard plate sizes have been published by various steel mills and should be used for guidance. These tables are available through the Steel Specialist or online.

In general, an individual plate should not exceed 12′-6″ feet in width, including camber requirements, or a length of about 60 feet. If either or both of these dimensions are exceeded, a butt splice is required and should be shown or specified on the plans. Some plates may be available in lengths over 90 feet, so web splice locations should be considered optional. Quenched and tempered plates are limited to 50 feet, based on oven size.

Plate thicknesses of less than 5⁄16 inches shall not be used for bridge applications.

Preferred plate thicknesses, English units, are as follows:

- 5⁄16″ to 7⁄8″ in 1⁄16″ increments
- 7⁄8″ to 1¼″ in 1⁄8″ increments
- 1¼″ to 4″ in ¼″ increments

6.1.7 Girder Segment Sizes

Locate bolted field splices so that individual girder segments can be handled, shipped, and erected without imposing unreasonable requirements on the contractor. Crane limitations need to be considered in congested areas near traffic or buildings. Transportation route options between the girder fabricator and the bridge site can affect the size and weight of girder sections allowed. Underpasses with restricted vertical clearance in sag vertical curves can be obstructions to long, tall segments shipped upright. The Region Project Office should help determine the possible routes, and the restrictions they impose, during preliminary planning or early in the design phase. Local heavy haul trucking companies can also be consulted to help determine girder shipping segment lengths and depths. Contact the Steel Specialist for more information.

Segment lengths should be limited to 150 feet, depending upon cross section. Long, slender segments can be difficult to handle and ship due to their flexibility. Horizontal curvature of girder segments may increase handling and shipping concerns. Out-to-out width of curved segments, especially box girders, should not exceed 14 feet without additional travel permits and requirements. Weight is seldom a controlling factor for I-girders. However, 40 tons is a practical limit for some fabricators. Limit weight to a maximum of 100 tons if delivery by truck is anticipated.

Consider the structure's span length and the above factors when determining girder segment lengths. In general, field splices should be located at dead load inflection points. When spans are short enough, some field splices can be designated optional if resulting segment lengths and weights meet the shipping criteria.

6.1.8 Computer Programs

The designer should consult the Steel Specialist to determine the computer program best suited for a particular bridge type.

Office practice and good engineering principles require that the results of any computer program or analysis be independently verified for accuracy. Also, programs with built-in code checks must be checked for default settings. Default settings may reflect old code or office practice may supersede the code that the program was written for.

6.1.9 Fasteners

All bolted connections shall be friction type (slip-critical). Assume Class B faying surfaces where inorganic zinc primer is used. If steel will be given a full paint system in the shop, the primed faying surfaces need to be masked to maintain the Class B surface.

Properties of High-Strength Bolts

Material	Bolt Diameter	Tensile Strength ksi	Yield Strength ksi
ASTM F 3125 GR A325 & GR F1852	½–1½ inch	120	92
	Over 1½		Not Available
ASTM A 449	¼–1 inch	120	92
	1⅛–1½ inch	105	81
	1¾–3 inch	90	58
	Over 3		Not Available
ASTM F 1554			
Grade 105	¼–3 inch	125-150	105
Grade 55	¼–4 inch	75-95	55
Grade 36	¼–4 inch	58-80	36
ASTM F 3125 GR A490 & GR F2280	½–1½ inch	150-173 (max)	130
	Over 1½		Not Available
ASTM A 354 GR BD	¼–2½ inch	150	130
	Over 2½–4 inch	140	115
	Over 4		Not Available

General Guidelines for Steel Bolts

6.1.9.A ASTM F 3125 GR A325 & GR F1852

High strength steel, headed bolts for use in structural joints. These bolts may be hot-dip galvanized in accordance with ASTM F2329 or mechanically galvanized in accordance with ASTM B695 – Class 55. For painted structures, WSDOT's current policy is to require galvanized bolts for structures that are painted to avoid the need for blasting and priming of black bolts after erection of the steel in the field. The *Standard Specifications* provides requirements for surface preparation and painting of galvanized bolts. Do not specify for anchor bolts. Galvanized GR F1852 "Twist-Off" style bolts are not permitted on WSDOT structures. A recent change to the ASTM F3125 specification allows for alternate dimensions such as modified head geometry or special thread lengths. The modified head geometry would include countersunk heads, which previously needed to be specified as ASTM A449. The engineer shall specify Supplement S2 when requiring alternate dimensions.

6.1.9.B ASTM A449

High strength steel bolts and studs for general applications including anchor bolts. Recommended for use where strengths equivalent to ASTM F 3125 GR A325 bolts are desired but custom geometry or lengths are required. Strengths for ASTM A 449 bolts are equivalent to GR A325 up to 1" diameter. If using bolts of larger diameter, a reduction in strength as indicated in the previous table shall be accounted for. These bolts may be hot-dip galvanized. Do not use these as anchor bolts for seismic applications due to low CVN impact toughness.

6.1.9.C F1554 – Grade 105

Higher strength anchor bolts to be used for larger sizes (1½″ to 4″). When used in seismic applications, such as bridge bearings that resist lateral loads, specify supplemental CVN requirement S4 with a test temperature of -20°F. Lower grades may also be suitable for sign structure foundations. This specification should also be considered for seismic restrainer rods, and may be galvanized. The equivalent AASHTO M 314 shall not be specified as it doesn't include the CVN supplemental requirements.

6.1.9.D ASTM F 3125 GR A490 & GR F2280

High strength alloy steel, headed bolts for use in structural joints. These bolts should not be hot dip galvanized, because of the high susceptibility to hydrogen embrittlement. In lieu of galvanizing, the application of an approved zinc rich paint may be specified. Other coating applications are available and are specified in ASTM F3125. The Steel Specialist shall be consulted prior to specifying one of the alternative coatings. Do not specify for anchor bolts. Only uncoated GR F2280 "Twist-Off" bolts are permitted on WSDOT structures.

6.1.9.E A354–Grade BD

High strength alloy steel bolts and studs. These are suitable for anchor bolts where strengths equal to ASTM F 3125 GR A490 bolts are desired. These bolts should not be hot dip galvanized. If used in seismic applications, specify minimum CVN toughness of 25 ft-lb at 40°F.

6.1.10 Bending Steel

It is often necessary to bend steel plate or members for use in the final configuration. This is common for sign brackets or bridge and architectural railings. In researching bending and rolling facilities, the minimum size bending radius for 2-inch to 6-inch diameter, schedule 40 or 80 pipe is 3 times the diameter, 3D. The measurement is taken to the centerline of the pipe. Some facilities may not be able to bend to this tight of a radius so specifying 4D or 5D is preferable.

When bending square tubes in the 2 to 4-inch range, a 12-inch inside radius should be used as a minimum, with larger radius being preferred.

When bends to larger diameter members, square or rectangular tubes, or rolled shapes (I-beams, angles and channels) is required, the designer should contact bend and roll facilities to verify capabilities. Consult with the Steel Specialist for additional information.

Bending of AASTHO M270 (ASTM A709) bridge steel may be necessary for haunched girders or the dapped ends of girders. Typically these plates can be cold bent (room temperature) provided a minimum radius of 5 times the thickness of the plate is specified, 5t. This requirement is for bending plate perpendicular to direction of final rolling. If it is necessary to bend parallel to the rolling direction, the minimum radius shall be increased to 7.5t.

When bending other grades of steel and for ancillary components (connection plates etc.) up to 3/4" thick the minimum bend radius may be taken as 1.5t, or as recommended by the plate producer. Again, the larger the bend radius the finished part will permit the better. Cracking can originate from the outside edges of bent plate, therefore it is recommended to require the edges of bent plates to be ground to a chamfer or radius prior to bending. Require the grinding to occur one-foot beyond the end of the bend.

Hot bending of bridge steels may be used with the approval of the WSDOT State Bridge Design Engineer and Steel Specialist. The Contractor shall submit a heating and bending plan for review. The plates shall be bent at a temperature above the "blue brittle" temperature of 700F but not greater than 1200F, except for HPS 70W and HPS 100W shall be limited to 1100F. Minimum radii shall be as previously specified.

6.2 Girder Bridges

6.2.1 General

Once the material of choice, structural steel has been eclipsed by prestressed concrete. Fabrication, material and life cycle costs have contributed to steel's relative cost disadvantage. Costs may be minimized by simplifying fabrication details, optimizing the number of girder lines, allowing for repetitive fabrication of components such as cross frames and stiffeners, and ensuring ease of shipping and erecting.

The specifications allow a combination of plastic design in positive moment regions and elastic design in negative moment regions. Plate girders, of the depths typically built in this state, have traditionally been designed to elastic limits or lower. High performance and weathering steel can be used to save weight and life cycle painting costs, thereby minimizing the cost gap between steel and concrete bridges.

I-girders may require accommodation for bridge security. Security fences may be installed within the confines of the superstructure to deter inappropriate access. Coordinate with the State Bridge and Structures Architect during final design where required.

6.2.2 I-Girders

Welded plate I-girders constitute the majority of steel girders designed by WSDOT. The I-girder represents an efficient use of material for maximizing stiffness. Its shortcoming is inefficiency in resisting shear. Office practice is to maintain constant web thickness and depth for short to medium span girders. Weight savings is achieved by minimizing the number of webs used for a given bridge. This also helps minimize fabrication, handling, and painting costs. Current office practice is to use a minimum of three girders to provide redundant load path structures. Two girder superstructures are considered non-redundant and hence, fracture critical.

Buckling behavior of relatively slender elements complicates steel plate girder design. Most strength calculations involve checks on buckling in some form. Local buckling can be a problem in flanges, webs, and stiffeners if compression is present. Also, overall stability shall be ensured throughout all stages of construction, with or without a bridge deck. The art of designing steel girders is to minimize material and fabrication expense while ensuring adequate strength, stiffness, and stability.

I-girders are an excellent shape for welding. All welds for the main components are easily accessible and visible for welding and inspection. The plates are oriented in the rolling direction to make good use of strength, ductility, and toughness of the structural steel. The web is attached to the top and bottom flanges with continuous fillet welds. Usually, they are made with automatic submerged arc welders (SAW). These welds are loaded parallel to the longitudinal axis and resist horizontal shear between the flanges and web. Minimum size welds based on plate thickness will satisfy strength and fatigue requirements in most cases. The flanges and webs are fabricated to full segment length with full penetration groove welds. These welds are inspected by ultrasound (UT) 100 percent. Tension welds, as designated in the plans, are also radiographed (RT) 100 percent. Office practice is to have flanges and webs fabricated full length before they are welded into the "I" shape. Weld splicing built-up sections results in poor fatigue strength and zones that are difficult to inspect. Quality welding and inspection requires good access for both.

6.2.3 Tub or Box Girders

Typical steel box girders for WSDOT are trapezoidal tub sections. Using single top flange plates to create true box sections is very uncommon when reinforced concrete decks are used. Tub girders will be referred to herein as box girders, as in LRFD-BDS Article 6.11.

The top lateral system placed inside the girder is treated as an equivalent plate, closing the open section, to increase torsional stiffness before bridge deck curing. Although not required by the code, it helps ensure stability that may be overlooked during construction. Partial or temporary bracing may be used provided it is properly designed and installed. Dramatic construction failures have occurred due to insufficient bracing of box girders. Stability of the shape shall be ensured for all stages of construction in accordance with LRFD-BDS Article 6.11.3. The cured bridge deck serves to close the section for torsional stiffness. Internal cross frames or diaphragms are used to maintain the shape and minimize distortion loading on individual plates and welds making up the box. Box segments will have considerable torsional stiffness when top lateral bracing is provided. This may make fit-up in the field difficult.

The ability to make box girders with high torsional stiffness makes them a popular choice for short radius curved structures. Curved box girders, because of inherent torsional stiffness, behave differently than curved I-girders. Curved box girder behavior can be easily modeled with modern finite element software. See curved girder references listed at the end of this chapter for complete description.

Straight box girders, when proportioned in accordance with LRFD-BDS Article 6.11.2 may be designed without consideration of distortional stresses. The range of applicability for live load distribution is based on:

$$0.5 \leq N_L \,/\, N_b \leq 1.5 \qquad (6.2.3\text{-}1)$$

Which limits the number of lanes loading each box. Wide box girder spacing, outside this range, will require additional live load analysis. Consideration must be given to differential deflection between boxes when designing the bridge deck. Generally, use of cross frames between boxes is limited to long spans with curvature.

Box girders shall have a single bearing per box for bridges with multiple box girders, not bearings under each web. If bearings are located under each web, distribution of loads is uncertain. For single box girder bridges, two bearings per box shall be used. Generally, plate diaphragms with access holes are used in place of pier cross frames.

With the exception of effects from inclined webs, top flanges and webs are designed as if they were part of individual I-girders.

The combined bottom flange is unique to box girders. In order to maximize web spacing while minimizing bottom flange width, place webs out of plumb on a slope of 1 in 4. Wide plates present two difficulties: excessive material between shop splices and buckling behavior in compression zones (interior piers). To keep weight and plate thickness within reason, it is often necessary to stiffen the bottom flange in compression with longitudinal stiffeners. Office practice is to use tee sections for longitudinal stiffeners and channel bracing at cross frame locations (transverse stiffeners). If possible, bottom flange stiffeners are terminated at field splices. Otherwise, carefully ground weld terminations are needed in tension regions with high stress range. Due to the transverse flexibility of thin wide plates, stiffener plates are welded across the bottom flange at cross frame locations, combined with web vertical stiffeners. For the design of the bottom flange in compression, see LRFD-BDS Articles 6.11.8.2 and 6.11.11.2.

6.2.4 Fracture Critical Superstructures

Non-redundant, fracture critical single tub superstructures, and twin I-girder systems, may sometimes be justified. In which case, approval for this bridge type must be obtained from the WSDOT State Bridge Design Engineer. Conditions that favor this option are narrow one lane ramps, especially with tightly curved alignments, at locations within existing mainline interchanges. Flyover ramps often fall into these constraints. The box section allows in-depth inspection access without significant disruption to mainline traffic. UBIT access over urban interstate lanes is becoming increasingly difficult to obtain.

Where curvature is significant, the box section is a stiffer, more efficient load carrying system than a twin I-girder system. If a twin I-girder system is to be used, approval must also be secured. Some form of permanent false decking or other inspection access needs to be included over mainline lanes that will be difficult to close for UBIT access. This access needs to be appropriate for fracture critical inspections. If curvature is not severe, the twin I-girder system may prove to be more economical than a single box.

The maximum roadway width for either a single box or twin I-girder superstructure is about 27 feet. Where roadway width exceeds this, additional girders shall be used. Mainline structures, usually exceeding 38 feet in width, will require a minimum of three webs, with four webs being the preferred minimum.

Increased vertical clearance from mainline traffic should be obtained for either of these bridge types. The desired minimum is 20 feet. Box sections tend to offer greater stiffness than equal depth I-girders, especially on curved alignment. The web depth may be reduced below LRFD-BDS Table 2.5.2.6.3-1 minimums provided live load deflection criteria are met. However, avoid web depth less than 5′-0″ so that inspection access is within reason. The desirable minimum web depth for boxes is 6′-6″. Box sections with web depth of 6′-6″ should be capable of interior spans up to 250 feet. Main spans of 150 feet should be considered the low end of this girder type's economical range. Because of the proximity of flyover ramps to high numbers of observers, attempt to streamline their superstructure depths where economical and deflection criteria can be achieved.

Consider use of high performance steels, AASHTO M270 grade HPS70W for these girder types. Grades of steel with equal CVN toughness may be considered, however the improved through-thickness properties of the HPS grades should also be considered. If practical, maintain a maximum flange thickness of 2″ when using HPS for better properties and plate availability. The improved toughness of HPS will lower the chance of sudden crack propagation if a crack does become visible to casual observation.

The limit state load modifier relating to redundancy, η_r = 1.05, as specified in LRFD-BDS Article 1.3.4 shall be used in the design of non-redundant steel structures. However, for load rating non-redundant structures, a system factor of 0.85 is currently required in the AASHTO *Manual for Bridge Evaluation* (MBE) on the capacity of the girders, which is not consistent with the redundancy load modifier used in design. The designer shall design some reserve capacity in the girders so the load rating value for HL93 Inventory is greater than or equal to 1.0.

The LRFD-BDS approximate live load distribution factors are not applicable to these girder types. The level rule or the preferred refined analysis shall be used. Where highly curved, only a refined analysis shall be used.

Fracture-critical members and system redundant members shall be designed for infinite fatigue life, which requires design using the Fatigue I load combination specified In Table 3.4.1-1 and the nominal fatigue resistance specified In Article 6.6.1.2.5.

6.3 Design of I-Girders

6.3.1 Limit States for AASHTO LRFD Bridge Design Specifications

Structural components shall be proportioned to satisfy the requirements of strength, extreme event, service, and fatigue limit states as outlined in LRFD-BDS Articles1.3.2 and 6.5.

Service limit states are included in Service I and Service II load combinations. Service I load combination is used to check the live load deflection limitations of LRFD-BDS Article 2.5.2.6. Service II places limits on permanent deflection, no yielding, slenderness of the web in compression, and slip of bolted connections.

The fatigue live load specified in LRFD-BDS Article 3.6.1.4 shall be used for checking girder details in accordance with Article 6.6. A single fatigue truck, without lane loading or variable axle spacing, is placed for maximum and minimum effect to a detail under investigation. The impact is 15 percent, regardless of span length. The load factor is 1.75. It is generally possible to meet the constant amplitude fatigue limit (CAFL) requirement for details with good fatigue performance. Limiting the calculated fatigue range to the CAFL ensures infinite fatigue life. Webs shall be checked for fatigue loading in accordance with LRFD-BDS Article 6.10.5.3, using the calculated fatigue stress range for flexure or shear. Shear connector spacing shall be according to LRFD-BDS Article 6.10.10. Generally, the fatigue resistance (Zr) for ⅞″ diameter shear connectors can be taken as 4.2 kips for an infinite number of cycles (CAFL = 4.2 kips).

Flanges and webs shall meet strength limit state requirements for both construction and final phases. Constructability requirements for flanges and webs are covered in LRFD-BDS Article 6.10.3. Flexure resistance is specified in LRFD-BDS Articles 6.10.7 and 6.10.8; shear resistance is specified in LRFD-BDS Article 6.10.9

Pier cross frames shall be designed for seismic loading, extreme event load combination. Bolts are treated as bearing type connections with LRFD-BDS Article 6.5.4.2 resistance factors. The resistance factor for all other members is 1.0 at extreme limit state.

6.3.2 Composite Section

Live load plus impact shall be applied to the transformed composite section using Es/Ec, commonly denoted n. Long-term loading (dead load of barriers, signs, luminaries, overlays, etc.) is applied to the transformed composite section using 3n. Positive moments are applied to these composite sections accordingly; both for service and strength limit states. The bridge deck may be considered effective in negative moment regions provided tensile stresses in the deck are below the modulus of rupture. This is generally possible for Service I load combination and fatigue analysis. For strength limit state loadings, the composite section includes longitudinal reinforcing while the bridge deck is ignored.

6.3.3 Flanges

Flange thickness is limited to 4″ maximum in typical bridge plate, but the desirable maximum is 3″. Structural Steel Notes on contract plans shall require all plates for flange material 2” or less to be purchased such that the ratio of reduction of thickness from a slab to plate shall be at least 3.0:1. This requirement helps ensure the plate material has limited inclusions and micro-porosity that can create problems during cutting and welding.

Plates for flange material greater than 2" thick shall be supplied based on acceptable ultrasonic testing (UT) inspection in accordance with ASTM A 578. UT scanning and acceptance shall be as follows:

- The entire plate shall be scanned in accordance with ASTM A 578 and shall meet Acceptance Standard C, and
- Plate material within 12-inches of flange complete joint penetration splice welds shall be scanned in accordance with ASTM A 578 Supplementary S1 and shall meet Acceptance Standard C

The number of plate thicknesses used for a given project should be kept to a minimum. Generally, the bottom flange should be wider than the top flange. Flange width changes should be made at bolted field splices. Thickness transitions are best done at welded splices. LRFD-BDS Article 6.13.6.1.4 requires fill plates at bolted splices to be developed, if thicker than ¼″. Since this requires a significant increase in the number of bolts for thick fill plates, keeping the thickness transition ¼″ or less by widening pier segment flanges can be a better solution. Between field splices, flange width should be kept constant.

6.3.4 Webs

Maintain constant web thickness throughout the structure. If different web thickness is needed, the transition shall be at a welded splice. Horizontal web splices are not needed unless web height exceeds 12′-6″. Vertical web splices for girders should be shown on the plans in an elevation view with additional splices made optional to the fabricator. All welded web splices on exterior faces of exterior girders and in tension zones elsewhere shall be ground smooth. Web splices of interior girders need not be ground in compression zones.

6.3.5 Transverse Stiffeners

Transverse stiffeners shall be used in pairs at cross frame locations on interior girders and on the inside of webs of exterior girders. They shall be welded to the top flange, bottom flange and web at these locations. This detail is considered fatigue category C' for longitudinal flange stress. Stiffeners used between cross frames shall be located on one side of the web, welded to the compression flange, and cut short of the tension flange. Stiffeners located between cross frames in regions of stress reversal shall be welded to one side of the web and cut short of both flanges. Alternatively, they may be welded to both flanges if fatigue Category C' is checked. Transverse stiffeners may be dropped when not needed for strength. If cross frame spacing is less than 3 times the web depth, additional stiffeners may only be necessary near piers.

Stiffened webs require end panels to anchor the first tension field. The jacking stiffener to bearing stiffeners space shall not be used as the anchor panel. The first transverse stiffener is to be placed at no greater spacing than 1.5 times the web depth from the bearing or jacking stiffener.

Transverse stiffeners shall be designed and detailed to meet LRFD-BDS Article 6.10.11.1. Where they are used to connect cross frames, they should be a minimum width of 8″ to accommodate two bolt rows.

6.3.6 Longitudinal Stiffeners

On long spans where web depths exceed 10 feet, comparative cost evaluations shall be made to determine whether the use of longitudinal stiffeners will be economical. The use of longitudinal stiffeners may be economical on webs 10 feet deep or greater. Weld terminations for longitudinal stiffeners are fatigue prone details. Longitudinal stiffener plates shall be continuous, splices being made with full penetration welds before being attached to webs. Transverse stiffeners should be pieced to allow passage of longitudinal stiffeners.

Design of longitudinal stiffeners is covered by LRFD-BDS Article 6.10.11.3.

6.3.7 Bearing Stiffeners

Stiffeners are required at all bearings to enable the reaction to be transmitted from the web to the bearing. These stiffeners are designated as columns, therefore, must be vertical under total dead load. The connection of the bearing stiffener to flanges consists of partial penetration groove welds reinforced with fillet welds, of sufficient size to transmit design loads.

Pier cross frames may transfer large seismic lateral loads through top and bottom connections. Weld size must be designed to ensure adequate load path from deck and cross frames into bearings.

Design of bearing stiffeners is covered by LRFD-BDS Article 6.10.11.2.

6.3.8 Cross Frames

The primary function of intermediate cross frames is to provide stability to individual girders or flanges. Cross frames or diaphragms are required at each support to brace girders; they should be as near to full-depth as practical and are required to be a minimum of 0.75 of the web depth for plate girders and 0.5 of the web depth for rolled sections.

On curved bridges, the cross frames also resist torsional twisting of the superstructure and are considered primary members. Pier cross frames are subjected to lateral loads from wind, earthquake, and curvature. These forces are transmitted from the roadway slab to the bearings by way of the pier cross frames. Intermediate cross frames also resist wind load to the lower half of the girders. The primary load path for wind is the concrete deck and pier diaphragms. Wind load on the bottom flange is shed incrementally to the deck through intermediate cross frames. The essential function, however, is to brace the compression flanges for all stages of construction and service life. As such, continuous span girders require bottom flange bracing near interior supports. Office practice requires intermediate cross frames at spacing consistent with design assumptions. The 25 foot maximum spacing of older specifications is not maintained in the LRFD-BDS code.

A rectangular grid of girders and cross frames with 3 or less girders may not be sufficiently stiff laterally before the deck is cured. Both wind and deck placement can cause noticeable deflections. In the case of deck placement, permanent sideway and rotation of the steel framing may result in a system buckling mode and should be checked per AASHTO section 6.10.3.4.2. Some form of temporary or permanent lateral bracing to an adjacent structure is recommended when possible. For example, when widening a steel girder bridge, the top and bottom struts of the cross frames should be installed and connected to the existing bridge with one bolt at each connection. This provides lateral stability but allows vertical deflections. The remaining connection bolts can be installed after the deck is cast.

Cross frames and connections should be detailed for repetitive fabrication and openness for inspection and painting. Cross frames consisting of back-to-back angles separated by gusset plates are not permitted. These are difficult to repaint. Cross frames are generally patterned as K-frames or as X-frames. Typically the configuration selected is based on the most efficient geometry. The diagonals should closely approach a slope of 1:1 or 45°. Some rules of thumb for selecting either X or K-frames are as follows:

- If S/D is less than or equal to 1.0, use X-frames
- If S/D is greater than or equal to 1.5, use K-frames
- If 1 < S/D < 1.5, OK to use either

Where,

S = girder spacing
D = total depth of web

WSDOT standard practice when using K-frame configured cross frames is to orient the frame where the diagonals meet at the center of the bottom horizontal strut. For pier cross frames, it may be advantageous to flip the K-frame so the diagonals help to transfer lateral loads from the deck directly into the girder bearings.

Avoid conflicts with utilities passing between the girders. Detailing of cross frames should follow guidelines of economical steel bridge details promoted by the National Steel Bridge Alliance. Office practice is to bolt rather than weld individual cross frames units to girder stiffeners. Welding of individual pieces to make up a cross frame unit is acceptable. Oversize holes are not allowed in cross frame connections if girders are curved and should be avoided for straight and skewed bridges unless approved by the Steel Specialist.

Intermediate cross frames for straight girders with little or no skew should be designed as secondary members. Choose members that meet minimum slenderness requirements and design connections only for anticipated loads, not for 75 percent strength of member. Cross frames should also be sized to meet the stability bracing requirements discussed in Chapter 13 of the recently updated (Feb. 2022) Steel Bridge Design Handbook. The stability bracing forces should be added to the loads obtained from the first-order analysis loads such as dead load, wind etc.

In general, cross frames should be installed parallel to piers for skew angles of 0° to 20°. For greater skew angles, other arrangements may be used. Recent research has provided guidance, much of which is included in AASTHO, for cross frame arrangements for skews greater than 20°, especially near intermediate piers and abutments. The key is to avoid a cross frame spanning from one girder that is supported by a pier or abutment to an adjacent girder point away from the support. This creates large cross frame forces due to differential deflections of the girders. Consult with the Steel Specialist for recommendations on cross frame arrangements.

Intermediate cross frames for curved I-girders require special consideration. Cross frames for curved girder bridges are main load carrying members and tension components should be so designated in the plans. For highly curved systems, it is more efficient to keep members and connections concentric, as live loads can be significant. Welded connections should be carefully evaluated for fatigue. Recent ballot items approved for the 10th Edition of AASHTO provides reductions in the fatigue demands in cross frames. Currently the load factors for Fatigue I (infinite) and Fatigue II (finite) are 1.75 and 0.80, respectively. These have been found to be overly conservative for cross frame design. The approved ballot item allows the current Fatigue I and II load factors to be multiplied by a cross frame design factor of 0.65.

For design and detailing of cross frames, the following are additional items to consider:

1. When using a refined analysis, such as a 3D model, member stiffness for equal leg single angles, unequal leg single angles connected by the long leg, and flange connected WT members may use an effective member stiffness equal to 0.65AE. This approach will reduce the force demands by accounting for connection stiffness and second-order stiffness softening. It is recommended to create a new steel material property within the analysis model with a reduced modulus, E, versus reducing the area, A, of the section.
2. When modeling cross frames in 3D models, the ends of the members should be considered pinned and the point of the connection to the girder web modeled as close to the true location as possible. Connecting the cross frame member directly into the intersection of the web and flanges can often produce higher demands than the members will actually experience.
3. When obtaining fatigue demands on cross frames, the maximum and minimum forces shall be obtained with the fatigue truck confined to one critical transverse position per each longitudinal position throughout the length of the bridge. In other words, the max/min forces on a cross frame shall be obtained from the truck loading from one lane. For a specific cross frame, it is too conservative to use the max force from a truck positioned in lane 1 while taking the minimum force obtained from and adjacent lane. For typical FEA model software, such as CSI Bridge, consisting of a model with multiple lanes, the normal output is to provide an envelope of max and min forces considering all the lanes. Fatigue truck loading will need to be carefully obtained from FEA models and should be limited to demands produced from one lane of loading at a time.
4. Cross frames can be one of the most expensive items to fabricate for a steel bridge. Economy of repetition should be considered in the design and detailing. If the loads on the cross frames vary along the length of the bridge, the cross frame designs can be grouped into 2-3 types based on demands. For example, one design for highly loaded frames, one for intermediate, and one for lightly loaded. It can be expensive to design one cross frame for the maximum demands and use them at all locations.
5. Detailing of cross frames have historically identified work points (WP) on the plans at the intersections of cross frame centerlines and the centerline of the girder web. Consider using the center of a bolt hole at cross frame gusset connections as a defined WP. This enables the fabricators in the shop to physically layout the WP in their fabrication jigs versus having it be “off in space” beyond the limits of the actual cross frame. Additionally, distances or clearances from girder flanges to bottom of cross frame gussets or WP can be called out with +/- tolerances, especially when there are variations in girder framing geometry. If there are tolerances allowed in the actual location of the cross frame, it provides opportunity for the fabricator to detail and fabricate cross frames that are exactly the same.
6. When obtaining cross frame loads, consider the actual stiffness of the supports and allowable movements in the bearings. A true pin or fixed bearing in a model can produce high demands on the pier cross frames. Including flexibility of the support or slight movements in bearings, say ⅛” to ¼”, can greatly reduce demands. This will depend on the bearing type.

7. For straight or slightly skewed I-girder bridges, consider lean on bracing for the cross frames. Lean on bracing has not been codified by AASHTO but several states have used them successfully in steel bridges. The general concept is to minimize the number of complete cross frames between girder lines. For example, in a 4-girder system labeled A through D, a complete K or X cross frame would be used between girders A and B while only top and bottom struts are installed between girders B-C and between C-D. The positions of the complete cross frame would vary along the length of the bridge and in some bays, complete cross frames would be used between all girders. See Figure 6.3.8-1 for a general illustration. The construction sequence will need to be carefully considered so stability is provided during girder erection. See the Steel Specialist for more guidance on design and detailing of lean on bracing.
8. Single angles members for cross frames are generally preferred by fabricators. These are the easiest to fabricate. WT sections require a W-beam to be cut in half, adding an additional step to fabrication. The LRFD-BDS provides equations for design of single angles that account for the eccentricity of the angle and the connection point, allowing the angle to be designed for just axial demands. When checking slenderness minimum requirements L/r or KL/r, use the radius of gyration, r, from the Z-Z axis.

Web stiffeners at cross frames shall be welded to top and bottom flanges. This practice minimizes out-of-plane bending of the girder web.

Figure 6.3.8-1 Lean on Bracing Example

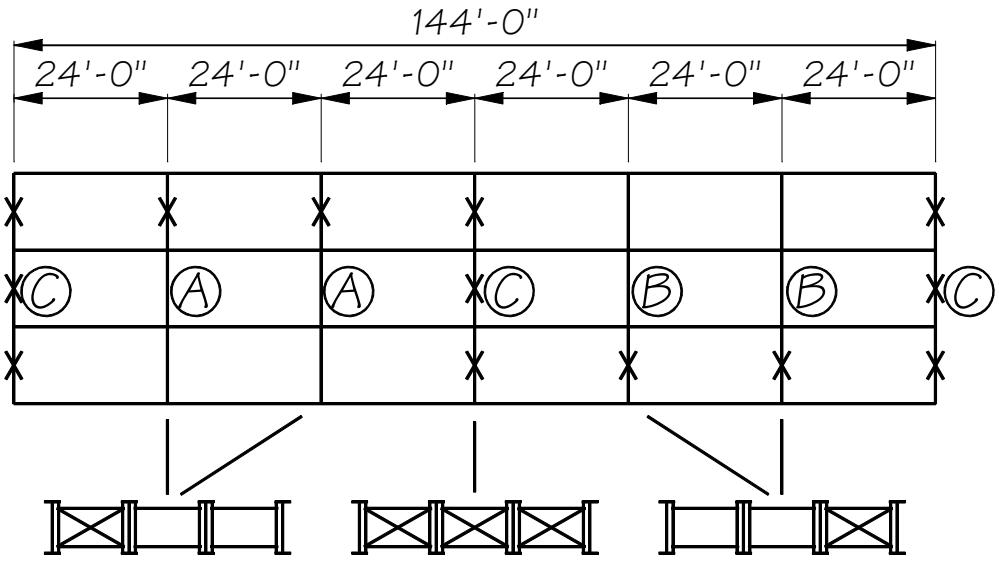

6.3.9 Bottom Laterals

Bottom lateral systems are expensive to install permanently. If possible, they should be avoided in favor of alternative bracing methods. They are seldom required in the completed structure, but may contribute to nuisance fatigue cracking or fracture in the main girders.

The primary function of a bottom lateral system is to stabilize the girders against lateral loads and translation before the bridge deck hardens. The layout pattern is based on number of girder lines, girder spacing, and cross frame spacing. Cost considerations should include geometry, repetition, number, and size of connections. If used, limit bottom laterals to one or two bays.

For both straight and curved structures, bottom laterals carry dead and live loads, in proportion to distance from the neutral axis. They should be modeled in the structure to determine the actual forces the member's experience. Since they carry slab dead load, they should be accounted for when calculating camber.

Where lateral gusset plates are fillet welded to girder webs, the fatigue stress range in the girder is limited to Category E without transition radius, or Category D with carefully made transition radius. The gusset plates should be bolted to the girder web in regions of high tension stress range.

For widening projects, bottom laterals are not needed since the new structure can be braced against the existing structure during construction. Framing which is adequately braced should not require bottom laterals.

6.3.10 Bolted Field Splice for Girders

Field splices shall be bolted. Splices are usually located at the dead load inflection point to minimize the design bending moment. See LRFD-BDS Articles 6.13.2 and 6.13.6.1 for bolted splice design requirements. A major revision to the design of bolted splices was implemented in the 8th Edition of the LRFD-BDS. The design methodology is simplified and requires top and bottom flange splice plates and bolts to be sized to develop the capacity of the smaller flange. Designing web splices is outlined in LRFD-BDS Article 6.13.6.1.3c. Web splices are sized to develop the shear capacity of the web, with a check on moments. Only 2 rows of web bolts will typically be required on each side of the splice plate. Bolted web splices should not involve thin fill material. Thickness transitions for webs, if needed, should be done with welded shop splices. The NSBA has developed a bolted splice EXCEL spreadsheet, which can be downloaded from their website to assist in splice design.

Flange splice design is outlined in LRFD-BDS Article 6.13.6.1.3b. For splice plates at least ⅜″ thick and ⅞″ diameter bolts, threads may be excluded from all shear planes for a 25 percent increase in strength, per LRFD-BDS Article 6.13.2.7. Bolts designed with threads excluded from shear planes shall be designated as such in the plans. Generally, bolts in girder field splices may be designed for double shear.

A requirement has been added for developing fillers used in bolted splices, LRFD-BDS Article 6.13.6.1.4. When fill plates are greater than ¼″, the splice or filler needs to be extended for additional bolts. As filler thickness increases, the shear resistance of bolts decreases. A way of minimizing filler thickness is to transition flange width for pier segments. Using equal plate thickness by this method has the added benefit of reducing the number of plate sizes in a project.

Splice bolts shall be checked for Strength load combinations and slip at Service II load combination. When faying surfaces are blasted and primed with inorganic zinc paint, a Class B surface condition is assumed.

Fabrication of girder splices is covered by *Standard Specifications* Sections 6-03.3(27) and 6-03.3(28). Method of field assembly is covered by Section 6-03.3(32) and bolting inspection and installation by Section 6-03.3(33). Since bolted joints have some play due to differences in bolt diameter and hole size, field splices are drilled while segments are set in proper alignment in the shop. The joint is pinned (pin diameter equals hole size to prohibit movement) for shop assembly and also during initial field fit-up. Normally, this ensures repeatability of joint alignment from shop to field.

6.3.11 Camber

Camber shall include effects of profile grade, superelevation, anticipated dead load deflections, and bridge deck shrinkage (if measurable). Permanent girder deflections shall be shown in the plans in the form of camber diagrams and tables. Dead load deflections are due to steel self-weight, bridge deck dead load, and superimposed dead loads such as overlay, sidewalks, and barriers. Since fabricated camber and girder erection have inherent variability, bridge deck form height is adjusted after steel has been set. Although a constant distance from top of web to top of deck is assumed, this will vary along the girders. Bridge deck forms without adjustment for height are not allowed. Girders shall be profiled once fully erected, and before bridge deck forms are installed. See *Standard Specifications* Section 6-03.3(39).

Girder camber is established at three stages of construction. First, girder webs are cut from plates so that the completed girder segment will assume the shape of reverse dead load deflections superimposed on profile grade. Only minor heat corrections may be made in the shop to meet the camber tolerance of the *Bridge Welding Code* AWS D1.5 Chapter 3.5. Camber for plate girders is not induced by mechanical force. The fabricated girder segment will incorporate the as-cut web shape and minor amounts of welding distortion. Next, the girder segments are brought together for shop assembly. Field splices are drilled as the segments are placed in position to fit profile grade plus total dead load deflection (no load condition). Finally, the segments are erected, sometimes with supports at field splices. There may be slight angle changes at field splices, resulting in altered girder profiles. Errors at mid-span can be between one to two inches at this stage.

The following is a general outline for calculating camber and is based on girders having shear studs the full length of the bridge.

Two camber curves are required, one for total dead load plus bridge deck formwork and one for steel framing self-weight. The difference between these curves is used to set bridge deck forms.

Girder dead load deflection is determined by using various computer programs. Many steel girder design programs incorporate camber calculation. Girder self-weight shall include the basic section plus stiffeners, cross frames, welds, shear studs, etc. These items may be accounted for by adding an appropriate percentage of basic section weight (15 percent is a good rule of thumb). Total dead load camber shall consist of deflection due to:

Steel weight, applied to steel section. Include 5 psf bridge deck formwork allowance in the total dead load camber, but not in the steel weight camber. The effect of removing formwork is small in relation to first placement, due to composite action between girders and bridge deck. It isn't necessary to account for the removal.

1. Bridge deck weight, applied to steel section. This should be the majority of dead load deflection.
2. Traffic barriers, sidewalks, and overlays, applied to long-term composite section using 3n. Do not include weight of future overlays in the camber calculations.
3. Bridge deck shrinkage (if $\geq$ ¾″).

Bridge deck dead load deflection will require the designer to exercise some judgment concerning degree of analysis. A two or three span bridge of regular proportions, for example, may not require a rigorous analysis. The bridge deck could be assumed to be

placed instantaneously on the steel section only. Generally, due to creep, deflections and stresses slowly assume a state consistent with instantaneous bridge deck placement. However, with the modern analysis tools available, it is recommended a rigorous analysis be performed for all steel bridge designs. An analysis coupled with a bridge deck placement sequence should be used. This requires an incremental analysis where previous bridge deck placement are treated as composite sections (using a modulus of elasticity for concrete based on age at time of second pour) and successive bridge deck placements are added on non-composite sections. Each bridge deck placement requires a separate deflection analysis. The total effect of bridge deck construction is the superposition of each bridge deck placement. This analysis can also be accomplished using staged construction features in most finite element analysis software.

Traffic barriers, sidewalks, overlays, and other items constructed after the bridge deck placement should be analyzed as if applied to the long-term composite section full length of the bridge. The modulus of elasticity of the slab concrete shall be reduced to one third of its short term value. For example, if f′c = 4000 psi, then use a value of n = 24.

Bridge deck shrinkage has a varying degree of effect on superstructure deflections. The designer shall use some judgment in evaluating this effect on camber. Bridge deck shrinkage should be the smallest portion of the total camber. It has greater influence on shallower girder sections, say rolled beams. Simple spans will see more effect than continuous spans. For medium to long span continuous girders (spans over 200 feet without any in-span hinges), bridge deck shrinkage deflection can be ignored. For simple span girders between 150 and 250 feet, the deflection should not exceed 1″. For calculation, apply a shrinkage strain of 0.0002 to the long-term composite section using 3n.

In addition to girder deflections, show girder rotations at bearing stiffeners. This will allow shop plan detailers to compensate for rotations so that bearing stiffeners will be vertical in their final position.

Camber tolerance is governed by the *Bridge Welding Code* AWS D1.5, chapter 5.5. A note of clarification is added to the plan camber diagram: “For the purpose of measuring camber tolerance during shop assembly, assume top flanges are embedded in concrete without a designed haunch.” This allows a high or low deviation from the theoretical curve, otherwise no negative camber tolerance is allowed.

A screed adjustment diagram shall be included with the camber diagram. This diagram, with dimension table, shall be the remaining calculated deflection just prior to bridge deck placement, taking into account the estimated weight of deck formwork and deck reinforcing. The weight of bridge deck formwork may be taken equal to 5 psf, or the assumed formwork weight used to calculate total camber. The weight of reinforcing may be taken as the span average distributed uniformly. The screed adjustment should equal: (Total Camber – Steel Camber)–(deflection due to forms + rebar). The screed adjustment shall be shown at each girder line. This will indicate how much twisting is anticipated during bridge deck placement, primarily due to span curvature and/or skew. These adjustments shall be applied to theoretical profile grades, regardless of actual steel framing elevations. The adjustments shall be designated “C”. The diagram shall be designated as “Screed Setting Adjustment Diagram.” The table of dimensions shall be kept separate from the girder camber, but at consistent locations along girders. That is, at $\frac{1}{10}^{th}$ points or panel points. A cross section view shall be included with curved span bridges, showing effects of twisting. See Appendix 6.4-A6.

For the purpose of setting bridge deck soffit elevations, a correction shall be made to the plan haunch dimension based on the difference between theoretical flange locations and actual profiled elevations. The presence of bridge deck formwork shall be noted at the time of the survey. The presence of false decking need not be accounted for in design or the survey.

6.3.12 Bridge Deck Placement Sequence

The bridge deck shall be placed in a prescribed sequence allowing the concrete in each segment to shrink with minor influence on other segments. Negative moment regions (segments over interior piers) must be placed after positive moment regions have had time to cure. This helps minimize shrinkage cracking and provides manageable volumes of concrete for a work shift.

Positive moment regions should be placed first, while negative moment regions are placed last. Successive segments should not be placed until previous segments attain sufficient strength, typically about 2000 psi or cure of 3 to 7 days. This general guideline is sufficient for typical, well balanced span, however the designer should check slab tensile stresses imposed on adjoining span segments. Required concrete strength can be increased, but needless delays waiting for higher strengths should be avoided. Also, the contractor should be given the option of placing positive moment segments with little influence on each other at a convenient rate, regardless of curing time. That is, segments separated by a span could be placed the same or next day without any harm. These can be lumped in the same pour sequence.

6.3.13 Bridge Bearings for Steel Girders

Make bearing selection consistent with required motions and capacities. The following order is the general preference, high to low, however the designer should consider economics and constructability when selecting bearings. In some cases where an elastomeric bearing could handle vertical loads and rotations, additional girder stops and/or hold downs may be needed, which could make a disc bearing a smarter and more economical choice.

- No bearings (integral abutments or piers)
- Elastomeric bearings
- Fabric pad bearings
- Disc bearings
- Spherical bearings

6.3.14 Surface Roughness and Hardness

The standard measure of surface roughness is the microinch value. This can be measured in a number of scales but typically in the USA, the Ra scale is assumed. Surface roughness shall be shown on the plans for all surfaces for which machining is required unless covered by the *Standard Specifications* or Special Provisions. Consult the *Machinery's Handbook* for common machining practice. Edge finishing for steel girders is covered in *Standard Specifications* Section 6-03.3(14). Surface hardness of thermal cut girder flanges is also controlled.

Following is a brief description of some finishes:

1000A surface produced by thermal cutting

500A rough surface finish typical of "as rolled" sections. Suitable for surfaces that do not contact other parts and for bearing plates on grout.

250A fairly smooth surface. Suitable for connections and surfaces not in moving contact with other surfaces. This finish is typical of ground edges in tension zones of flanges.

125A fine machine finish resulting from careful machine work using high speeds and taking light cuts. It may be produced by all methods of direct machining under proper conditions. Suitable for steel to steel bearing or rotational surfaces including rockers and pins.

63A smooth machine finish suitable for high stress steel to steel bearing surfaces including roller bearings on bed plates.

32An extremely fine machine finish suitable for steel sliding parts. This surface is generally produced by grinding.

16A very smooth, very fine surface only used on high stress sliding bearings. This surface is generally produced by polishing.

For examples, see Figure 6.3.14-1.

For stainless steel sliding surfaces, specify a #8 mirror finish. This is a different method of measurement and reflects USA industry standards for finish on stainless steel sheet, strip, and plate. A #1 finish is basically "as rolled" and the scale goes up to a #8 finish, which is the mirror finish. No units are implied. See the Steel Specialist for examples of these finishes.

Figure 6.3.14-1 Surface Finish Examples

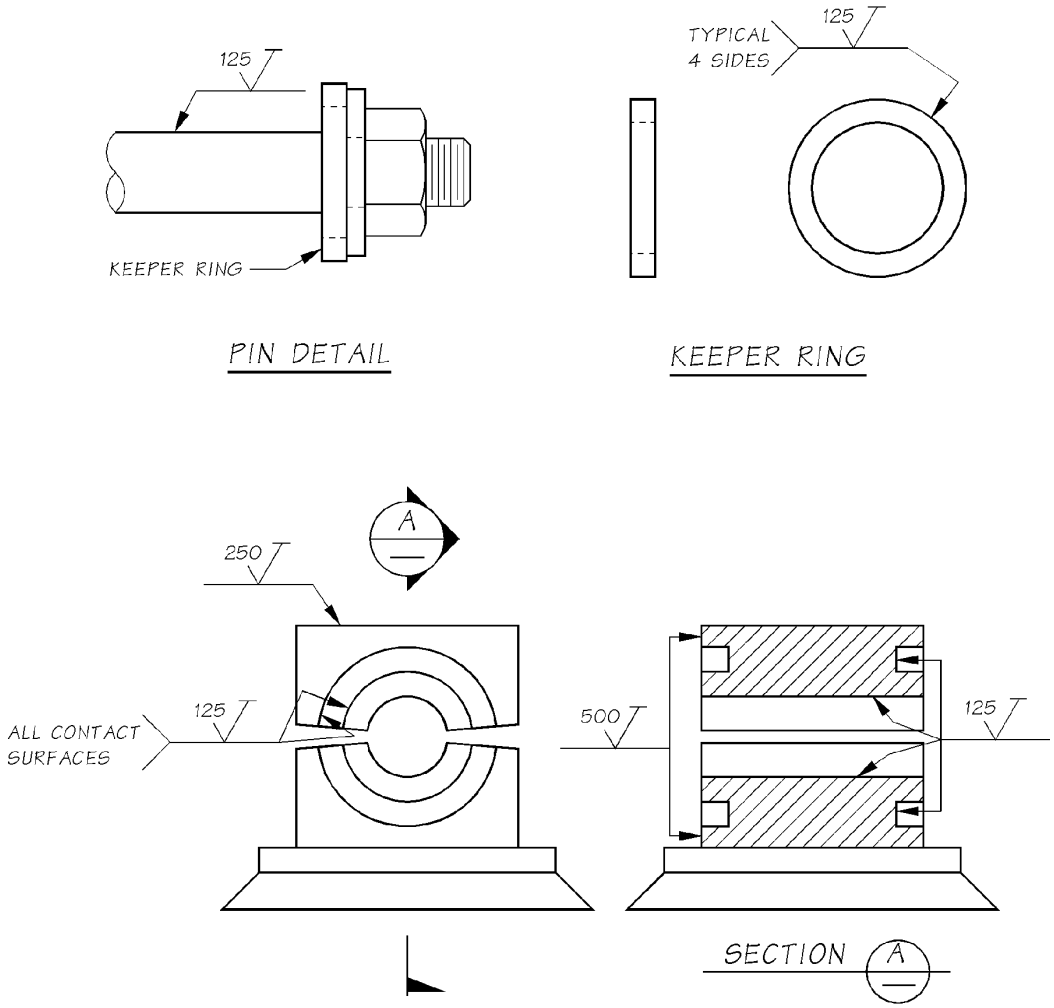

6.3.15 Welding

All structural steel and rebar welding shall be in accordance with the *Standard Specifications*, amendments thereto and the special provisions. The *Standard Specifications* currently calls for welding structural steel according to the AASHTO/AWS D1.5 *Bridge Welding Code* (BWC), latest edition and the latest edition of the AWS D1.1 *Structural Weld Code*.

Exceptions to both codes and additional requirements are shown in the *Standard Specifications* and the special provisions.

Standard symbols for welding, brazing, and nondestructive examination can be found in the ANSI/AWS A 2.4 by that name. This publication is a very good reference for definitions of abbreviations and acronyms related to welding.

The designer shall consider the limits of allowable fatigue stress, specified for the various welds used to connect the main load carrying members of a steel structure. See LRFD-BDS Article 6.6. Most plate girder framing can be detailed in a way that provides fatigue category C or better.

The minimum fillet weld size shall be as shown in the following table. Weld size is determined by the thicker of the two parts joined unless a larger size is required by calculated stress. The weld size need not exceed the thickness of the thinner part joined.

Base Metal Thickness of Thicker Part Joined	Minimum Size of Fillet Weld
To ¾″ inclusive	¼″
Over ¾″	5⁄16″

In general, the maximum size fillet weld which may be made with a single pass is 5⁄16 inch for submerged arc (SAW), gas metal arc (GMAW), and flux-cored arc welding (FCAW) processes. The maximum size fillet weld made in a single pass is ¼ inch for the shielded metal arc welding (SMAW) process.

The major difference between AWS D1.1 and D1.5 is the welding process qualification. The only process deemed prequalified in D1.5 is shielded metal arc (SMAW). All others must be qualified by test.

All bridge welding procedure specifications (WPS) submitted for approval shall be accompanied by a procedure qualification record (PQR), a record of test specimens examination and approval except for SMAW is prequalified.

Notes: Electrogas and electroslag welding processes are not allowed in WSDOT work. Narrow gap improved electroslag welding is allowed on a case-by-case basis.

Often in the rehabilitation of existing steel structures, it is desirable to weld, in some form, to the in-place structural steel. Often it is not possible to determine from the original contract documents whether or not the existing steel contains high or low carbon content and carbon equivalence. Small coupons from the steel can be taken for a chemical analysis. Labs are available in the Seattle and Portland areas that will do this service quickly. Suitable weld procedures can be prepared once the chemical content is measured.

6.3.16 Shop Assembly

In most cases, a simple progressive longitudinal shop assembly is sufficient to ensure proper fit of subsections, field splices, and cross frame connections, etc., in the field. Due to geometric complexity of some structures, progressive transverse assembly, in combination with progressive longitudinal assembly may be desirable. The designer shall consult with the Design Unit Manager and the Steel Specialist to determine the extent of shop assembly and clarification of *Standard Specifications* Section 6-03.3(28)A. If other than line girder progressive assembly is required, the method must be included by special provision. High skews or curved girders should be done with some form of transverse and longitudinal assembly. Complex curved and skewed box girder framing should be done with full transverse progressive assembly. For transverse assembly, specify cross frame and pier diaphragm connections to be completed while assembled.

During shop assembly, girder segments are blocked or supported in the no-load condition (no gravity effects). Simple line girder assembly is often done in the horizontal position. The primary reason for shop assembly is to ensure correct alignment for girder field splices. For straight bridges, cross frame connections are normally done by numerically controlled (NC) drilling (no trial shop assembly). This is generally of sufficient accuracy to allow cross frame installation in the field without corrective action such as reaming.

For curved I-girders, cross frames are to be fabricated to fit the no-load or steel dead load only condition. During field erection, girder segments will need to be adjusted or supported to make fit-up possible. This is not unreasonable since curved girders are not self-supporting before cross frames are in place. However, the method results in out-of-plumb girders. For most cases, making theoretical compensation to arrive at plumb in final condition is not justified.

Highly skewed girders present difficult fit-up conditions. Setting screeds is also complicated because of differential deflections between neighboring girders. Design of cross frames and pier diaphragms must take into account twist and rotations of webs during construction. This situation should be carefully studied by finite element analysis to determine amount and type of movement anticipated during construction. Details should be consistent. Unlike curved girders rotating away from plumb at midspan, girder webs for skewed construction should be kept plumb at piers. The National Steel Bridge Association (NSBA) has published *Skewed and Curved Steel I-girder Bridge Fit*, which is a good reference on how to deal with fit-up of skewed and curved girders. Consult with the Steel Specialist on what fit-up to specify in the plans for curved and skewed bridges. Straight bridges, fit of girders is not an issue because the webs will remain vertical in all conditions, no-load, steel dead load only, and total dead load.

6.4 Plan Details

6.4.1 General

Detailing practice shall follow industry standards. Previous plans are a good reference for detailing practices. Detailing should also conform to national unified guidelines published by AASHTO/NSBA Steel Bridge Collaboration listed in Section 6.1.1.

Details for plate girders are continually being revised or improved to keep up with changing fabrication practice, labor and material costs, and understanding of fatigue behavior. Uses and demands for steel girder bridges are also changing. Cost benefits for individual details vary from shop to shop and even from time to time. For these reasons, previous plan details can be guides but should not be considered standards. Options should be made available to accommodate all prospective fabricators. For example, small shops prefer shorter, lighter girder segments. Some shops are able to purchase and handle plates over 90 feet long. Large shop assembly may be prohibitive for fabricators without adequate space.

WSDOT practice shall be to use field bolted connections. Cross frame members may be shop bolted or welded assemblies and shall be shipped to the field in one unit. Connections of bolted cross frame assemblies shall be fully tensioned prior to shipping. Cross frame assemblies shall be field bolted to girders during erection.

6.4.2 Structural Steel Notes

Structural steel notes are dynamic in nature and often change due to changes in design, materials and industry practice. A starting point for Structural Steel Notes can be found in the Standard Design Drawings on the WSDOT Bridge and Structures website and as standards in the drafting system. Since each project has unique requirements, these notes should be edited accordingly. Material specifications are constantly changing. Separate sets of notes are available for bridges to be painted and for weathering steel bridges. Amendments to each are available for box girders. Contact the Steel Specialist for specific questions related to steel notes.

6.4.3 Framing Plan

The Framing Plan shall show plan locations of girders, cross frames, and attachments and show ties between the survey line, girder lines, backs of pavement seats, and centerlines of piers. Locate panel points (cross frame locations). Show general arrangement of bottom laterals. Provide geometry, bearing lines, and transverse intermediate stiffener locations. Show field splice locations. Map out different lateral connection details. See Bridge Standard Drawing 6.4-A1.

6.4.4 Girder Elevation

The Girder Elevation is used to define flanges, webs, and their splice locations. Show shear connector spacing, location, and number across the flange. Show shear connector locations on flange splice plates or specifically call out when no connectors are required on splice plates. Locate transverse stiffeners and show where they are cut short of tension flanges. Show the tension regions of the girders for the purpose of ordering plate material, inspection methods (NDE), and *Bridge Welding Code* acceptance criteria. See Charpy V-notch testing requirements of the *Standard Specifications*. Identify tension welded butt splices for which radiographic examination (RT) is required. See *Standard Specifications* Section 6-03.3(25)A. V and X are also defined in the Structural Steel Notes. Permissible welded web splices should be shown, however, the optional welded web splice shown on the Girder Details sheet permits the fabricator to add splices subject to approval by the engineer. If there are fracture critical components, they must be clearly identified as FCM. If a member is identified as fracture critical with an "FCM" symbol, it is not necessary to also call the plate or member with a "V" for Charpy-V-Notch as this is covered with the "FCM" designation. See Bridge Standard Drawing 6.4-A2.

6.4.5 Typical Girder Details

One or two plan sheets should be devoted to showing typical details to be used throughout the girders. Such details include the weld details, various stiffener plates and weld connections, locations of optional web splices, and drip plate details. Include field splice details here if only one type of splice will suffice for the plans. An entire sheet may be required for bridges with multiple field splice designs. See Bridge Standard Drawings 6.4-A3 and 6.4-A4. Note: Do not distinguish between field bolts and shop bolts. A solid bolt symbol will suffice.

Field splices for flanges should accommodate web location tolerance of ± ¼″ per Bridge Welding Code Section 5.5. Allow a minimum of ¼″ for out of position web plus ⅜″ for fillet weld, or a total of ⅝″ minimum clear between theoretical face of web and edge of splice plate. The bottom flange splice plate should be split to allow moisture to drain (use 4 equal bottom flange splice plates). The fill plate does not need to be split.

Vertical stiffeners used to connect cross frames are generally 8″ wide to accommodate two bolt rows. They shall be welded to top and bottom flanges to reduce out-of-plane bending of the web. All stiffeners shall be coped, clipped (or cut short in the case of transverse stiffeners without cross frames) a distance between $4t_w$ and $6t_w$ to provide web flexibility, per LRFD-BDS Article 6.10.11.1.

6.4.6 Cross Frame Details

Show member sizes, geometrics (work lines and work points), and connection details. Actual lengths of members and dimensions of connections will be determined by the shop plan detailer. Details shall incorporate actual conditions such as skew and neighboring members so that geometric conflicts can be avoided. Double angles shall not be used for cross frames. Cross frames shall be complete subassemblies for field installation. For highly loaded cross frames, such as at piers or between curved girders where single angles or WT sections will not suffice, consider symmetric sections (HSS tubes) with little or no eccentricity in the connections. Where possible, allow for repetitive use of cross frame geometrics, especially hole patterns in stiffener connections, regardless of superelevation transitions. See Bridge Standard Drawing 6.4-A5.

Internal cross frames and top lateral systems for box girders are shop welded, primarily. All connection types should be closely examined for detail conflict and weld access. Clearance between bridge deck forming and top lateral members must be considered.

6.4.7 Camber Diagram and Bearing Stiffener Rotation

Camber curves shall be detailed using conventional practices. Dimensions shall be given at tenth points. Dimensions may also be given at cross frame locations, which may be more useful in the field. In order to place bearing stiffeners in the vertical position after bridge deck placement, it is necessary to show expected girder rotations at piers. See Bridge Standard Drawing 6.4-A6.

Office practice is to show deflection camber only. Geometric camber for profile grade and superelevation will be calculated by the shop detailer from highway alignment shown on the Layout sheets.

A separate diagram and table, with bridge cross section, should be included to show how elevations at edges of deck can be determined just before concrete placement. This will give adjustments to add to profile grades, based on remaining dead load deflections, with deck formwork and reinforcing being present.

The camber diagram is intended to be used by the bridge fabricator. The screed setting adjustment diagram is intended to be used by the contractor and inspectors.

6.4.8 Bridge Deck

New bridge decks for steel I-girders or box girders shall use Deck Protection System 1. The bridge deck slab is detailed in section and plan views. The current WSDOT policy requires one percent minimum steel be provided for the entire length of the bridge so typically only one section view is required for single or continuous spans.

The "pad" dimension for steel girders is treated somewhat differently than for prestressed girders. The pad dimension is assumed to be constant throughout the span length. Ideally, the girder is cambered to compensate for dead loads and vertical curves. However, fabrication and erection tolerances result in considerable deviation from theoretical elevations. The pad dimension is therefore considered only a nominal value and is adjusted as needed along the span once the steel has been erected and profiled. The screed for the slab is to be set to produce correct roadway profile. The plans should reference this procedure contained in *Standard Specifications* Section 6-03.3(39). The pad dimension is to be noted as nominal. As a general rule of thumb, use 11″ for short span bridges (spans less than 150′), 12″ for short to medium span bridges (150′ to 180′), 13″ for medium spans (180′ to 220′) and 14″ to 15″ for long spans (over 220′). These figures are only approximate. Use good engineering judgment when detailing this dimension.

6.4.9 Handrail Details, Inspection Lighting, and Access

If required, include handrails with typical girder details. Locations may be adjusted to avoid conflicts with other details such as large gusset plates. Handrail use shall be coordinated with the Bridge Preservation Office (BPO). Often, handrails are not needed if access to all details is possible from under bridge inspection trucks (UBIT's) although recently the BPO inspection staff has requested handrails on both sides of interior girders and the inside of exterior girders. Easy public access to girder ends and handrails may represent a nuisance. Examine the bridge and site to determine the need for handrails. Fences may be required to deny public access.

Box girders require special consideration for inspection access. Access holes or hatches shall be detailed to exclude birds and the public. They shall be positioned where ladders, as a minimum, are required to gain access. If possible locate hatches in girder webs at abutments. Hatches through webs may reduce shear capacity but are easier to use. Webs can be thickened to compensate for section loss. Provide for round trip access and penetrations at all intermediate diaphragms. Openings through girder ends are preferred if space behind end walls permits. Bottom flange hatches are difficult to operate. Pier diaphragms will require openings for easy passage. Access for removing bridge deck formwork shall be planned for. Typically, block-outs in the deck large enough to remove full size plywood are detailed. Block-outs require careful rebar splicing or coupling for good long term performance. Box girders shall have electrical, inspection lighting, and ventilation details for the aid of inspection and maintenance. Refer to the *Design Manual* Chapter 1040 for bridge inspection lighting requirements. Coordinate with the Region Design Office to include lighting with the electrical plans.

To facilitate inspection, interior paint shall be SAE AMS Standard 595 color number 17925 (white). One-way inspection of all interior spaces should be made possible by round trip in adjoining girders. This requires some form of walkway between boxes and hatch operation from both sides. If locks are needed, they must be keyed to one master. Air vents shall be placed along girder webs to allow fresh air to circulate. Refer to previous projects for details.

6.4.10 Box Girder Details

A few details unique to box girders will be presented here. Office practice has been to include a top lateral system in each box, full length of a girder. There is a possibility of reducing some bays of the top laterals in straight girders without sacrificing safety during construction. However, most WSDOT box girders are built to some level of curvature, and the practice of using a full length top lateral system should be adhered to unless a careful stability analysis is undertaken. In the past, the top lateral system was detailed with 6″ to 8″ clearance between lateral work line and bottom of top flange. The intent was to provide adequate clearance for removable deck forming. This requires the introduction of gusset connecting plates with potentially poor fatigue behavior if welded to the web.

A cleaner method of attaching the top laterals is by bolting directly to the top flange or intermediate bolted gusset plate (in which case, the lateral members may be welded to the gusset plate). The flange bolting pattern shall be detailed to minimize loss of critical material, especially at interior supports. In order to maximize the clearance for bridge deck forms, all lateral connections should progress down from the bottom surface of the top flange. The haunch distance between top of web and deck soffit shall be 6″ or greater to allow deck forming to clear top lateral members. Supplemental blocking will be required to support deck forms on the typical waler system. See example top lateral details Bridge Standard Drawings 6.4-A11.

Ideal girder construction allows full length web and flange plates to be continuously welded without interruption of the welder. This process is routinely accomplished with I-girder shapes, where web stiffeners are attached after top and bottom flanges are welded to the web. With box girders, however, due to handling constraints, most fabrication shops need to progress from top flange-to-web welding, welding stiffeners to webs, and then welding the top flange plus web assemblies to the bottom flange. This introduces a start and stop position at each web stiffener, unless enough clearance is provided for the welder. To achieve this, the stiffener should be held back and attached

to the bottom flange by a member brought in after the bottom longitudinal welds are complete. See detail Bridge Standard Drawings 6.4-A11.

Small tractor mounted welders are able to run a continuous pass on the bottom external weld, provided there is adequate shelf width. The standard offset between center of web and edge of bottom flange is now 2″. In the past, this weld was primarily performed by hand.

The most significant design difference between I-girders and box girders occur in bottom flange compression regions. Using thicker material to provide stability is not usually economical, given the typically wide unsupported flange widths. The standard practice has been to stiffen relatively thin compression plates with a system of longitudinal and transverse stiffeners. WSDOT practice is to use tee shapes, either singly or in pairs for the wider plates. Ideally, the stiffeners are terminated at bolted field splices. If the stiffener is terminated in a region of live load tension cycles, careful attention needs to be paid to design fatigue stresses and the termination detail. See details Bridge Standard Drawings 6.4-A13.

Box girder inside clear height shall be 5 feet or more to provide reasonable inspection access. Less than 5 feet inside clear height is not be permitted. Other girder types and materials shall be investigated.

Drain holes shall be installed at all low points.

Geometrics for boxes are referenced to a single workline, unless box width tapers. The box cross section remains tied to a centerline intersecting this workline and normal to the bridge deck. The section rotates with superelevation transition rather than warping. See box girder geometrics and proportions Bridge Standard Drawings 6.4-A10.

Box girders shall be supported by single centralized bearings when two or more boxes make up the bridge section. This requires diaphragms between boxes for bracing. See pier diaphragm details Bridge Standard Drawings 6.4-A12.

6.5 Shop Plan Review

Shop plans shall be checked for agreement with the Contract Plans, *Standard Specifications*, and the Special Provisions. The review procedure is described in Section 1.3.5. Material specifications shall be checked along with plate sizes.

Welding procedure specifications (WPS) and procedure qualification records (PQR), when applicable, should be submitted with shop plans. If not, they should be requested so they can be reviewed during the shop plan review process.

All the geometry in most shop plans is typically not reviewed in its entirety, however the reviewer should verify that lengths, radii, material types, and sizes shown on shop plans are in general agreement with the contract. The effects of profile grade and camber would make exact verification difficult. Some differences in lengths, between top and bottom flange plates for example, are to be expected.

Typically shop plans are submitted as Type 2 Working Drawings. See *Standard Specifications* Section 1-05.3 for definitions of Working Drawings. Upon completion of the review, the submittal shall be stamped in accordance with the WSDOT *Construction Manual* Section SS 1-05.3 guidance. The status of the submittal is typically stamped as:

1. No exceptions taken
2. Make corrections noted
3. Revise and resubmit.

When stamping as “Make corrections noted” it is often worthwhile to note whether the shop plan needs to be resubmitted or not.

6.6 Painting of Existing Steel Bridges

6.6.1 General

With the aging of our existing steel bridge inventory, painting of these existing steel bridges has become a common preservation project requiring PS&E development. The majority of the painting projects are existing steel truss bridges and this section will focus mainly on trusses, however most aspects of this section are also applicable to plate girder and box girder type structures.

The existing truss bridges range in complexity from simple span through-truss bridges to complex multi-span, arched deck trusses. As part of the PS&E development, the structures need to be analyzed to ensure the bridge can support the construction loads that will be imposed on the structure. In many instances, the structures will need to remain open to all or partial live load traffic lanes.

The existing trusses may require both a vertical and horizontal analysis. The vertical analysis is necessary to ensure the structure can withstand the additional dead and live load from painting construction activities. The horizontal analysis is necessary to ensure the structure can withstand the lateral wind loading imposed on the structure during painting operations. Containment is required to collect all debris and creates a large "sail" area with respect to the truss condition without containment. Wind load limitations must be imposed as part of the Contract documents to ensure the structure is not overloaded while the containment is in place. This will be covered in more detail in Section 6.6.3. In most cases when painting a plate or box girder structure, only a vertical analysis will be required. The containment necessary for plate or box girders will not be substantially larger than the normal exposed wind area of the bridge without containment.

Most existing steel structures were originally constructed when lead paint was used as a primer coat for protection of the steel elements. It began to phase out in the 1960's and was formally banned by the Federal government in 1978. However, lead paint was not removed from WSDOT *Standard Specifications* until the early 1990s. Structures constructed prior to these dates should be assumed to contain lead based paint. For many years, WSDOT's practice was to overcoat existing steel structures, including trusses. This involved removal of loose paint and debris, spot sandblasting and priming of areas with visible rust, and then over coating with an intermediate and top coat of paint. WSDOT's current policy is to require full paint removal on our existing steel structures that have only received overcoat paint applications in the past. This entails full removal of all existing paint, rust, mill scale etc. down to bare metal. Refer to Section 6-07 of the *Standard Specifications* for more details on full paint removal procedures. Contract Special Provisions should indicate the general paint history of a structure and note that blasting to bare metal has not occurred in the past, several layers of paint may exist on the structure, and no guarantee of total paint thickness can be made. Paint history forms can be obtained from the Bridge Asset Engineer and can be include as "For Information Only" documents.

WSDOT's current policy requires full containment of all blasting and paint debris and shall be in accordance with SSPC Technology Guide No. 6, *Guide for Containing Surface Preparation Debris Generated During Paint Removal Operations* Class 1. Emissions from the containment are limited to the Level A Acceptance Criteria – Option Level 0 Emissions standard per SSPC Technology Update No. 7. This means no emissions (debris, old paint, sand blast media, etc.) are permitted to escape the containment.

6.6.2 Vertical Analysis

A vertical analysis is typically required when developing plans and specifications for a steel bridge painting project. Cases where a vertical analysis may not be required are when the structure will be closed to live load during construction or when enough lanes will be closed to easily ensure the extra construction load will be less than the live load from the closed lanes.

The vertical analysis consists of a load rating of the bridge with added loads for construction dead and live load. The additional dead load is primarily due to containment, access platforms, and equipment. The additional live load is for workers, and debris from abrasive blasting. These are considered live loads because they vary and are not constant. For the vertical analysis, a 25 psf load is typically assumed to account for both dead and live loads. The width of the applied construction load is typically assumed to be the bridge width plus 5 feet on each side. This is only a rule of thumb and can be adjusted, but the assumptions used for the area of construction load must be clearly stated in the plans. If the Contractor chooses to use a wider or narrower width of platform, then they can adjust the allowable construction load proportionally. Construction load can also be increased if the structure allows or decreased if 25 psf creates rating concerns. The minimum reasonable construction load should be at least 20 psf.

The load rating analysis is only performed for legal vehicles, which include the AASHTO 1, 2 and 3 vehicles and the NRL. In some cases, additional vehicles may need to be included in the rating on a case-by-case basis including emergency vehicles. The construction load is subtracted from the member capacity in the numerator of the typical load rating equation. In most cases the LRFR rating method should be used.

The designer should assume the construction load is applied to the entire length of the structure. This allows the contractor the most flexibility in constructing the work access and containment. In some cases, this may not be possible due to load rating limitations and only specific zones will be permitted to be loaded with the additional construction load. Again, these limitations need to be clearly stated on the contract plans.

As with a typical load rating, the rating should include the primary truss members, the floor system and the primary member gusset plates. The designer should check with the WSDOT Bridge Preservation office's Load Rating Engineer to obtain the latest load rating information. Often, an existing rating can be easily modified to add in construction loads or existing structural models can be utilized as part of the analysis.

In addition to the global analysis of the structure for the added construction load, analysis of localized loads on individual members may be required. The number of support points and maximum applied loads for individual stringers, floor beams or truss elements will need to be outlined in the Contract plans. The most common approach is to provide maximum loads and spacing of support points. The Contractor will need to analyze the local attachment to the member based on his construction methods and particular attachment detail. Alternatively, maximum additional shear or moment demands on specific members can be provided, however maximum loads and support point spacing is typically preferred by the Contractor.

6.6.3 Horizontal Analysis

As discussed previously, and primarily with truss type structures, a horizontal wind analysis will need to be performed to ensure the structure can resist wind loads while the containment is in place, which creates a large wind or "sail" area on the bridge. As part of the analysis, the amount of bridge to be contained needs to be determined and at what maximum wind speed the containment side walls need to be removed to provide an acceptable level of safety. This is particularly important with long span trusses and trusses with varying depths such as arch deck trusses or camel back trusses. Currently the *Standard Specifications* limit the amount of containment to one span unless otherwise specified. In some cases more or less than one span can be contained. It is possible that a Contractor may want to contain portions of multiple spans or they may want to maintain a constant containment length, but progressively move the containment down the length of the bridge. This can create many different loading conditions on the structure.

A full rigorous analysis can always be performed for the horizontal analysis taking into account member capacities and demands; however a simplified method has been successfully employed in the past and will be described herein. The following is a basic outline of the process followed by a more detailed description for each step.

Basic Outline:

1. Compute the LRFD-BDS design wind pressure for the bridge elements based on the existing site conditions.
2. Apply the wind pressure to the bridge elements and calculate total horizontal wind shear at each support location.
3. Utilize the total design wind shear at each support as the allowable upper bound horizontal wind loading.

Assume locations for containment. Back calculate a reduced wind speed that results in the same or lower horizontal wind shear at each pier. Compute for the various containment conditions. Determine allowable containment areas and associated maximum wind speeds during construction. These maximum wind speeds will be the forecast wind speed value that triggers the Contractor to remove or lower the containment side walls.

Detailed Discussion:

The following discussion provides more detail to the outlined steps above. In the past Excel spreadsheets have been used for the analysis and have proven to be an efficient tool for this simplified analysis.

Steps 1, 2 & 3:

Determining the design horizontal wind shear at each pier or support location requires computing the exposed surface area of the existing truss members, floor system and any barrier or rail. The design wind pressure, P_z, to apply to the surface area should be computed based on the latest LRFD-BDS for the Strength III Limit State. The wind speed to use in the calculation of wind pressure should be obtained from LRFD-BDS Figure 3.8.1.1.2-1. The Wind Exposure Category and Ground Surface Roughness Category will need to be selected based on judgment of the existing site. The Drag Coefficients will vary depending on the member and can be found in LRFD-BDS Table 3.8.1.2.1-2. Typically for truss members the sharp-edged member coefficient is used, whereas the I-girder Superstructure coefficient is used for the floor system and barrier.

The computed design wind pressure is applied to each member or bridge element to compute a horizontal shear per member. For simplicity, the individual member horizontal shear can be distributed to each pier or support by assuming simple span boundary conditions for each span, regardless if the truss is continuous over the pier(s). The load is assumed to be applied at the mid-length of the member when computing horizontal distances to the pier. The summation of all member shear forces is calculated for each pier and can be considered the maximum allowable shear force per pier or support. The calculated maximum shears will be based on the latest AASHTO wind speeds and could be higher than the original design. As a good check, the designer should review the existing stress sheets as they often will have design wind shear for the bearings. These forces will be Service level demands and should be compared with unfactored calculated demands. If no data is available, old versions of the AASHTO code in the WSDOT Bridge Office archives can be reviewed to determine design wind speeds and or pressures used when the structure was originally constructed. Historically a wind pressure of 50psf was used on trusses. The designer can then make a judgment as to what maximum shear value should be used for comparison in the next steps. Regardless of which maximum wind shear is to be used, a safety (or resistance) factor of 0.80 should be applied to the maximum permissible shear forces.

Overturning stability of a bridge should be calculated at each pier, especially when the truss has significant depth, has a variable depth, or the ratio of truss line horizontal spacing to truss vertical depth is less than ⅕. Overturning forces have been computed on previous projects and have been found to not be of concern and no uplift conditions on the bearings were encountered.

Step 4:

Once the upper bound horizontal shear force per pier has been determined, analysis of the containment areas can be computed.

Simple Spans Structures: For a simple span truss, it is recommended the designer start by assuming the entire span is covered with containment. For the total containment height, assume a vertical distance from 5 feet below the truss bottom chords to 5 feet above the top of bridge superstructure. Using the total containment area, calculate the associated wind pressure that results in the previously determined maximum shear at the pier or support. From this wind pressure, back calculate the corresponding wind speed. For containment areas use a drag coefficient for I-Girder Superstructures when back calculating wind speed. This drag coefficient most closely represents a flat surface created by the containment. This value is the maximum wind speed that can be allowed on the structure before the Contractor will be required to remove or lower the containment side walls. The Contract Specifications and Special Provisions require the Contractor to monitor forecasted wind speeds and gusts and are required to act accordingly if speeds over the maximum are expected. As a rule of thumb, 30 to 35 mph has been successfully used as maximum wind speeds on several projects. However, removal of containment can be time consuming and expensive for the Contractor. A more desirable maximum wind speed is in the range of 45 to 50 mph. The Contractor may not necessarily be working in these conditions, but will allow them to safely leave the containment in place.

Multi-span, *Long-span*, *Variable Depth or Complex Geometry Structures*: These types of truss structures typically require more analysis due to the many containment scenarios that could be employed on the structure. In many cases only portions of the span will or can be contained. When computing shear forces at the piers or supports, the portion

contained and the members not contained will need to be included in the analysis. This is where an Excel spreadsheet can be a handy tool. In past analyses, each bay of the truss has been set up with essentially an "on or off" switch. If on, the total area of the truss bay or panel is assumed contained and the associated area and distances from the center of the bay are used to calculate horizontal wind shear at the piers. If off, only the truss members within the bay are assumed to be loaded with wind pressure. Shear forces are combined and total shear at the pier is computed. This tool allows many containment scenarios to be investigated at various wind pressures and speeds. As discussed earlier, the Contractor will often want to contain a constant length of the bridge, but will move the containment progressively along the length.

As discussed with the simple spans, a wind pressure and corresponding wind speed can be back-calculated and used as the maximum allowable construction wind speed.

For further questions on the analysis methods, and what method may be appropriate for a given structure, discuss with the Steel Specialist.

6.6.4 Special Considerations

6.6.4.A Coast Guard

Coast Guard permits will be required for any painting project over a navigable waterway. The containment will typically extend below the structure thereby reducing the vertical and/or horizontal clearance of the navigation channel. Temporary navigation lights may also be required as part of the project as existing lights may be covered by containment.

The WSDOT Coast Guard Liaison should be contacted early in the design process so there is sufficient time to procure the necessary permits. When a moveable span is included in the project, such as a bascule, lift, or swing bridge, the operation of the moveable span may need to be modified during the contract. This will require either a deviation or rule change to the operation of the bridge. The deviation can be handled at the local level and allows for changes up to 6 months. If changes to the operation of the bridge are required for longer than 6 months, a temporary rule change will be required and will need approval at the national level.

6.6.4.B Moveable Spans

When working with moveable spans, consideration for machinery and span balancing must be considered. For most moveable bridges, counterweights are necessary to balance the span while it is being lifted or swung open. This is to keep the span operating smoothly and to reduce demand on the machinery and associated components. The Bridge Preservation Office should be contacted to discuss the specifics of the project. In some cases measurements of the bridge machinery must be taken prior to any work starting and then again after painting is complete and prior to operating. Removing all the existing paint can change the weight and balance of the span and adjustments to the counterweights may be required. The machinery will also need to be protected during painting operations, particularly sandblasting. Sandblasting can severely damage bearings, gears, motors etc. if not protected. These elements are typically excluded from the project painting limits.

Operation of the moveable spans with containment in place is typically not permitted. This will need to be coordinated with the Coast Guard and durations where the span is inoperable should be minimized to avoid impacts to the marine traffic.

6.6.4.C Traffic Control

Traffic Control options will need to be discussed with the Region early in the project, particularly with through-truss type bridges. Ideally the bridge can be closed during the painting operation; however that is not the norm. In most cases all or partial lanes will need to remain open during the painting project. This will control the amount and location of containment the Contractor will be permitted to install. The trade-off is the overall duration of the project. If several containment set-ups are required, the longer the project duration and number of working days required.

6.6.4.D Review of Construction Submittals

The *Standard Specifications* requires a comprehensive painting plan be submitted by the Contractor for all painting projects. Included in the submittal will be the engineered containment plans. These will need to be reviewed carefully to ensure the limitations outlined in the Contract have been followed. In many cases, attachments to existing piers, bearings or walls are required as part of the containment support system to resist horizontal forces. These attachment locations and associated calculations also need careful review to ensure no damage will occur to existing elements.

6.6.4.E Structural Steel Repairs

The designer should review the existing inspection reports for the bridge(s) included in the painting project to determine if structural repairs are required and would be appropriate to add to the scope of work. In addition, the design engineer should consider a site visit to review and inspect the existing structure during the design effort. The designer should consult with the Bridge Preservation Office to coordinate the site visit (traffic control, UBIT or other equipment needs). During the site visit the designer should verify any repair areas identified in the inspection reports and look for additional areas that may need repairs. An assessment of the condition of the existing rivets and amount of existing pack rust should be made to help in estimating quantities for the project. In most cases it will be difficult to inspect the entire bridge, but representative areas can be inspected and evaluated and then extrapolated to the entire structure.

The Bridge Asset Management Engineer should be consulted as to available funding for structural repairs. If known structural repairs are not required, all paint projects should include a bid item for Misc. Steel Repairs to account for items that are discovered during the painting operations. Typically this bid item is included as a Force Account item so that WSDOT can direct the work when needed repairs are identified. In addition, existing rivets that are corroded or loose should be replaced during the contract. A detail is provided in the plans that outlines in what condition a rivet should be removed and replaced with a high strength bolt. All rivets being replaced with high strength bolts should be replaced with galvanized bolts. Tension control “twist–off” bolts shall not be permitted. Use of galvanized bolts avoids having to go back and sandblast the black bolts in preparation for prime paint in areas that have already been blasted and primed. Refer to Standard Drawing 6.4-A16 for details on evaluation and replacement of existing rivets. Rivets shall be evaluated after blasting and priming operations. In many cases rivet deterioration can't be evaluated until after blasting operations are completed. However, to avoid flash rust on the newly blasted steel, the Contractor will need to prime the existing surfaces prior to any evaluation inspection can occur. The rivet evaluation and repair work shall be included in a separate per each bid item.

The engineer should review the inspection reports to determine a reasonable estimate for number of rivets in addition to any assessments made during a site visit. Consult with the Steel Specialist if the inspection reports do not have an estimated quantity of deteriorated rivets. The Misc. Steel Repair Force Account bid item should be included to cover any unforeseen structural repairs. Known structural repairs are typically included as a Lump Sum bid item based on estimated steel weight.

6.6.5 Quantities and Estimates

As part of the PS&E development, quantities of surface area will need to be calculated for the entire bridge. This can be a time consuming effort but is necessary to estimate project costs and durations. On truss bridges, it is typically sufficient to compute the surface areas of the members from panel point to panel point and ignore the gusset plates. Detailed comparisons have been performed and when a member length between panel points is used, the area of the gusset plates is typically accounted for. A factor for miscellaneous area in the range of 5% to 15% can be added depending on the complexity of the bridge to cover connections, bolt or rivet surfaces, and any miscellaneous items not accounted for in the surface quantity take-off. Once the quantity of surface area is computed, the Specification and Estimate Engineers should be consulted and can provide estimates on cost.

When estimating schedules, experience from previous truss painting projects can be used as a guide. A good rule of thumb is to assume one painting crew consisting of 6-8 people can complete 250SF of surface area per 8 hour shift. This would include set-up and take-down of containment, blasting and painting. From these initial estimates, durations can be estimated for the entire project by adjusting number of crews on the project and number of shifts worked per day. For plate girder projects, production rates may be higher. The designer should consult with the S&E Engineer or the Steel Specialist for additional information. The engineer/estimator must take into account the practical limitations of a given project. For example, a simple span truss will have limited amount of access and/or crews that can be working at one time. Alternatively a large multi-span truss may have several crews working or several shifts per day. Constraints at a particular site will also need to be considered in the working day estimate. Limitations on night work may be required due to noise concerns. The sandblasting operation is loud and often exceeds the noise limits, particularly in populated areas..

6.7 Corrosion of Steel Foundations and Buried Structures

6.7.1 Corrosion of Steel Foundations

The following section provides corrosion rates for the design of steel H-piling, pipe piling, concrete filled steel tubes (CFSTs), and sheet piling. The design wall, flange, and web thickness, as applicable, for structural steel sections shall be reduced for corrosion over a 75-year minimum design life. The remaining steel thickness at 75 years shall be sufficient to resist the anticipated design loads. Minimum corrosion rates for section loss are specified in Table 6.7-1 below.

Table 6.7-1 Section Loss (inch per year)

Location	Marine or Non-Marine: Corrosive	Non-Marine: Non-Corrosive
Soil embedded zone (undisturbed soil)	0.001	0.0005
Soil embedded zone (fill or disturbed soils)	0.0015	0.00075
Immersed zone	0.003	0.0015
Tidal zone	0.004	---
Splash zone	0.006	---
Atmospheric	0.002	0.001

Definitions of the terms used in Table 6.7-1 are as follows:

- **Marine** – a site is considered a marine environment if the structure is less than 1000 feet measured from the surface or edge of salt or brackish water. Water shall be considered brackish if the chloride concentration is measured at 500 ppm or greater measured at mean tide level or higher.
- **Non-Marine: Corrosive** – a non-marine site is greater than 1000 feet from salt or brackish water and is considered corrosive if one or more of the following conditions exist based on representative soil and/or water samples:

  1. The chloride concentration is 500 ppm or greater,
  2. The sulfate concentration is 1500 ppm or greater,
  3. The pH is 5.5 or less.

  If none of the following conditions exist, the site is considered non-marine: non-corrosive. Refer to Section 6.7.2.1 for information on appropriate testing procedures.
- **Immersed zone –** portion of structural steel element which is continuously immersed or submerged in water. Immersed non-marine: non-corrosive are environments with fresh water or are tested and found not to meet the marine or non-marine: corrosive values.
- **Tidal zone –** portion of structural steel element in a marine environment between the Mean Lower Low Water (MLLW) and the Mean High Water (MHW) based on the MLLW Datum.
- **Splash zone –** portion of structural steel element in a marine environment located above the MHW plus five additional feet or as otherwise determined for a specific site.
- **Atmospheric** - portion of structural steel element above the splash zone or above ground line as applicable.

The section loss for H-piling and sheet piling shall be doubled to account for both surfaces being exposed. For piling exposed on one face and against the soil on the opposite, the appropriate exposure section loss values can be used per side and then added for a total loss. The interior surface of pipe piling and CFSTs are assumed to be sealed by concrete fill or a soil plug, which prevents sufficient oxygen to support significant corrosion. A micro-pile is considered a subset of pipe piles.

The corrosion rates are based on information published in the CALTRANS March 2018, Corrosion Guidelines, version 3.0, the FHWA NHI-16-009 Design and Construction of Driven Pile Foundations - Volume I, and the Washington State Ferries *Terminal Design Manual*, 2016.

A site-specific assessment should be performed to determine if a site is considered marine, non-marine: corrosive, or non-corrosive. If a site investigation is not performed, the values for a marine/non-marine: corrosive site shall be used unless otherwise approved by the State Bridge Design Engineer. Sampling of a site for corrosion assessment requires samples of the soil and/or water to be obtained from both the surface and subsurface materials to ensure representation of the strata at the site. Water samples in flowing streams and rivers shall not be taken when the water level is elevated due to storm conditions as they may dilute the chemical concentrations.

The potential for scour need not be considered when choosing a design corrosion rate as it relates to zones of exposure. It is assumed any significant scour would be repaired and the applicable zone of a structural element would not be changed. However, if abrasion on the section is a concern, additional wall thickness should be considered. Refer to the discussion on abrasion in Section 6.7.2.5 for more guidance.

A protective coating may be applied to the structural steel sections to increase the corrosion protection. If a coating is utilized, then the section loss corrosion is assumed to begin at the end of the effective life of the coating. Coating effective life is generally assumed to be 15 years. An appropriate coating system shall be specified to withstand damage from handling and driving. Contact the WSDOT Steel Specialist for recommendations on paint systems and coating thicknesses for use on steel piling.

Coating requirements for steel piles in soldier pile walls (cantilever and tie-back) is covered by the *Standard Specifications* Section 6-16.3(4). Any portion of the pile embedded in concrete or CDF need not consider corrosion or section loss, but portions adjacent to the soil or exposed to the atmosphere shall consider section loss for the design life of the structure.

6.7.2 Corrosion and Abrasion of Metal Buried Structures

Metal buried structures consist of steel or aluminum structural plate pipes, arches, and boxes and shall be designed in conformance with Section 12 of the –LRFD-BDS. Once a structural shape, size, material, and gage are selected, the designer shall perform a service life analysis to ensure a minimum structure service life of 75 years is provided. Issues affecting the service life include corrosive action of the exterior and interior environments and abrasive action of the hydraulic flow adjacent to the structure. Metal buried structures consisting of steel structural plate shall not be used in Marine and Non-Marine: Corrosive environments as defined in Section 6.7.1.

6.7.2.A Corrosion

The design service life analysis shall include a check on both the outside or backfill and the inside or water side environments to determine which governs.

The characteristics of the soil and water in contact with the structure that can contribute to corrosion include, but are not limited to, soluble salts, sulfates, soil and water resistivity, soil and water pH, and the presence of oxygen.

During design, corrosion investigations of in-situ soils, fill material (native or imported) to be used as backfill, soils/materials to be used inside the buried structure and any water flowing into or around the structure shall be performed. Soils shall meet the requirements of *Standard Specification* 6-20.3(6) and 6-20.3(9)A.

Soil and water sampling and testing procedures shall follow the requirements of the following or other approved test protocol:

1. WSDOT T 417 (resistivity and pH of soil and water)
2. CALTRANS Test 643 (resistivity of soil and water)
3. AASHTO T 288 (resistivity of soil)
4. AASHTO T 289 (soil pH)
5. AASHTO T 290 (sulfate in soil)
6. AASHTO T 291 (chloride in soil)
7. ASTM D 1293 (water pH)
8. CALTRANS Test 417 (soil and water sulfate content)
9. CALTRANS Test 422 (soil and water chloride content)

Water samples shall not be taken when the water level is elevated due to storm conditions as this may dilute chemical concentrations.

6.7.2.B Steel Structures

For galvanized steel buried structures, once the controlling pH and resistivity values of the environment are determined, the designer shall utilize the chart in Figure 6.7-1 to determine the estimated service life of the structure. The chart is based on 18 gage galvanized sheet steel. If a gage thicker than 18 is used, the thickness factor table within the chart can be used as a multiplier on the estimated service life.

Note: CALTRANS developed thickness modification factors up to 8 gage, which were then interpolated out to 1 gage by CONTECH Engineered Solutions. Thicknesses greater than 1 gage shall use the factors for 1 gage.

If the estimated service life is less than 75 years, additional thickness shall be added beyond what is required for structural demands to achieve the 75 year service life.

For aluminized steel buried structures, using aluminum-coated (Type 2) sheet steel in accordance with AASHTO M274, the service life and resistance to corrosion is generally more than galvanized steel structures. A similar chart and methodology can be used for aluminum coated structures and is found in Figure 6.7-2. The chart is based on 16 gage aluminized sheet steel. If a gage thicker than 16 is used, the thickness factor table within the chart can be used as a multiplier on the estimated service life. The service life is based on years to first perforation.

Aluminum-coated steel structures should generally only be used when environmental conditions have a pH between 5 and 9 and a resistivity greater than 1500 ohm-cm. Recent studies documented in the National Corrugated Steel Pipe Association (NCSPA) Pipe Selection Guide indicated that 14 gage aluminum-coated structures can achieve over 75 year service life in these environmental conditions. The WSDOT *Hydraulics Manual* also recommends aluminum-coated pipe only be used with pH between 5 and 8.5 and soil resistivity greater than 1000 ohm-cm. These recommendations are based on assumed 50 year service life.

6.7.2.C Aluminum Alloy Structures

Aluminum alloy plate has been shown to be more resistant to corrosion than either galvanized or aluminized steel. A chart for determining service life, similar to that for galvanized and aluminized steel, is located in Figure 6.7-3. The chart is based on 16 gage aluminum alloy plate and as with the aluminum-coated chart, the service life is based on years to first perforation. The chart was developed for aluminum pipe (Al-Clad 7072/3004) but is applicable to aluminum structural plate (5050 alloy).

Aluminum alloy plate structures should generally only be used when environmental conditions have a pH between 4.5 and 9 and a resistivity greater than 500 ohm-cm. There is no upper limit on resistivity as soft water is not a concern.

Figure 6.7-1 Chart for Estimating Average Invert Life for 18 Gage Plain Galvanized Buried Structures (CALTRANS *Highway Design Manual*/CONTECH Structural Plate Design Guide)

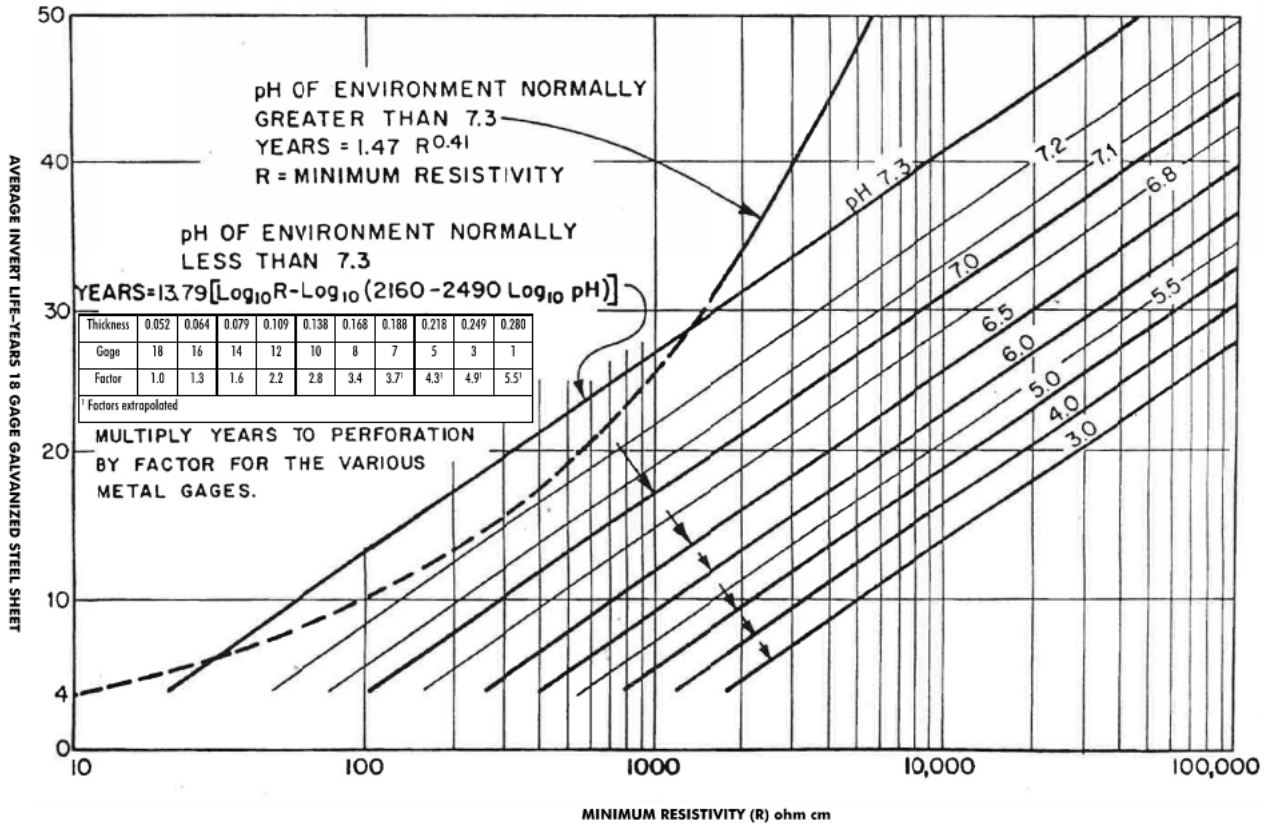

Thickness	0.052	0.064	0.079	0.109	0.138	0.168	0.188	0.218	0.249	0.280
Gage	18	16	14	12	10	8	7	5	3	1
Factor	1.0	1.3	1.6	2.2	2.8	3.4	3.7[1]	4.3[1]	4.9[1]	5.5[1]

[1] Factors extrapolated

Figure 6.7-2 **Chart for Estimating Average Invert Life for 16 Gage Aluminized Steel Buried Structures (Florida DOT Drainage Design Guide, 2019)**

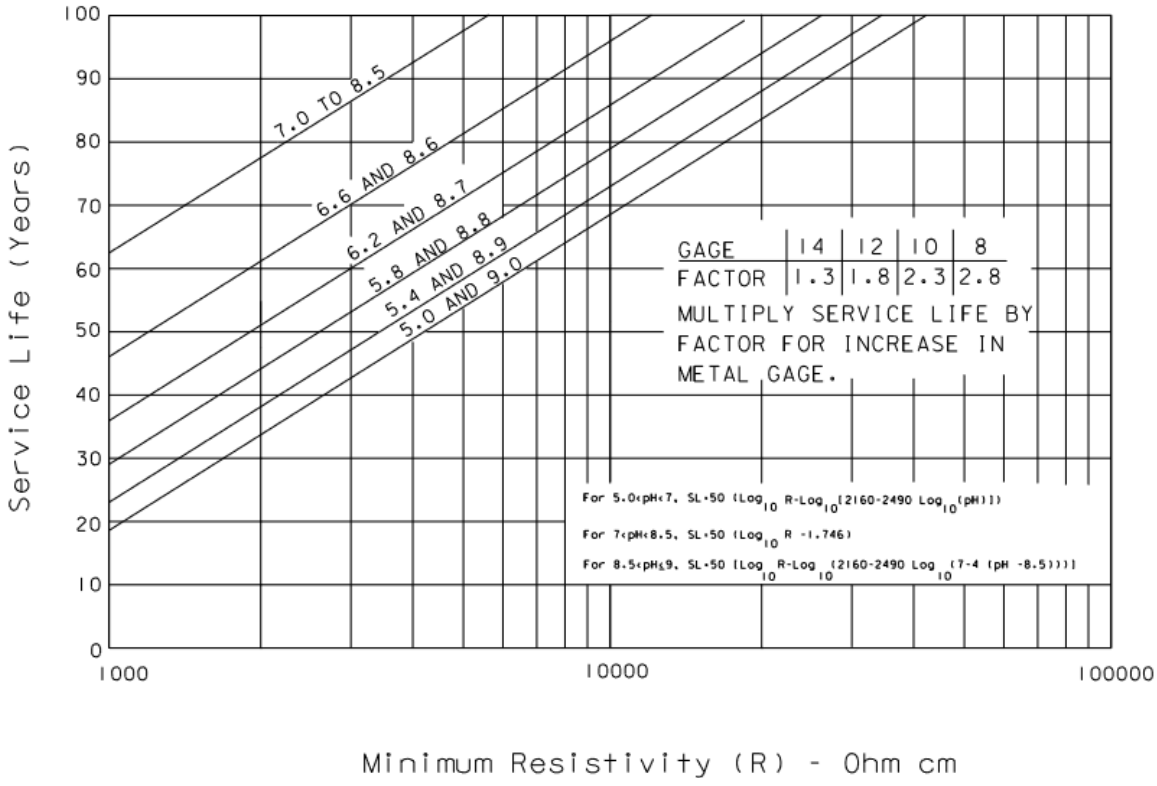

Figure 6.7-3 **Chart for Estimating Average Invert Life for 16 Gage Aluminum Alloy Buried Structures (Florida DOT Drainage Design Guide, 2019)**

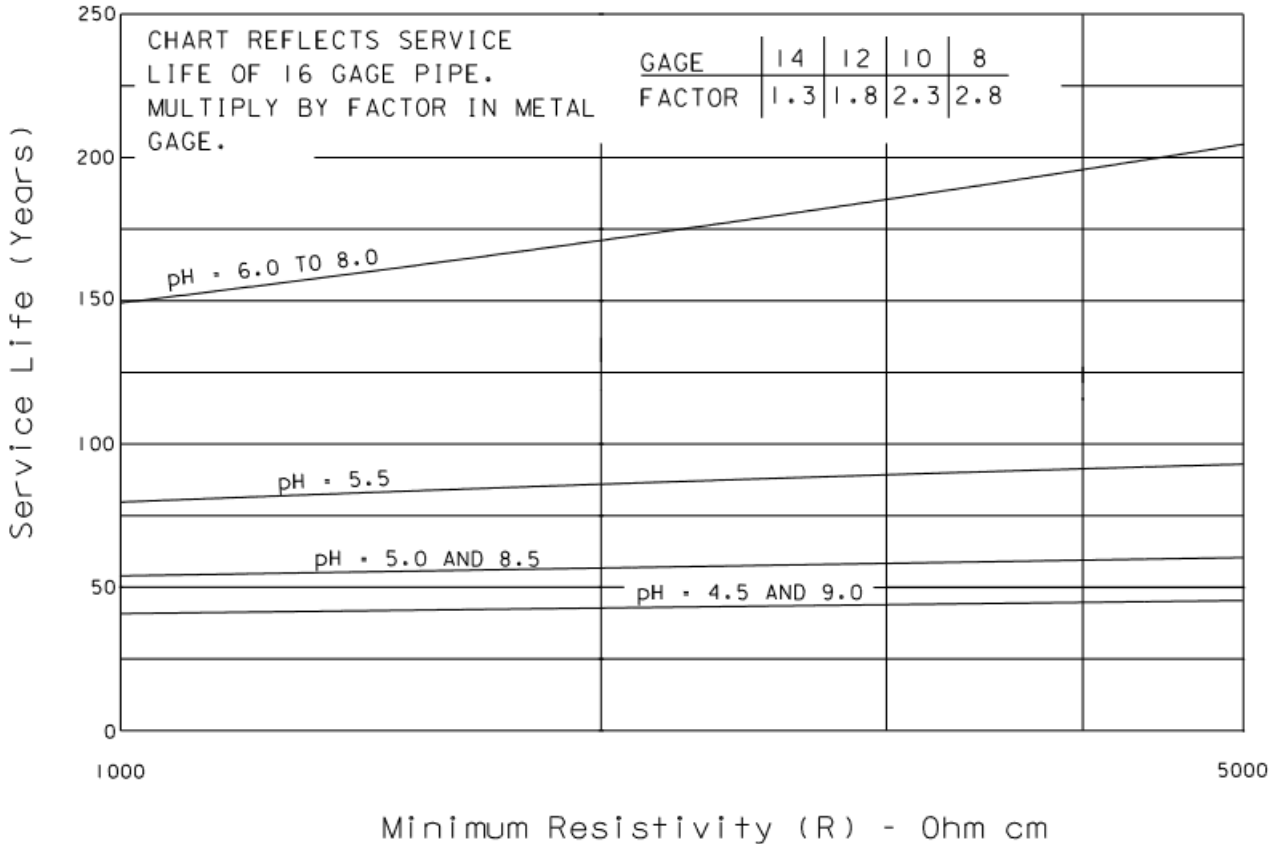

6.7.2.D Alternative Coatings and Mitigation for De-icing Salts

Alternate coatings for buried metal structures, such as polymer, asphalt, concrete linings, and others are also available but are not discussed in detail in this section. The designer will need to evaluate the corrosion and abrasive potential and select the appropriate coating to achieve a 75 year service design life. If a coating is utilized, then the section loss corrosion and/or abrasion is assumed to begin at the end of the effective life of the coating. Any alternative coating selected shall be approved by the WSDOT Bridge Design Office.

When a metal buried structure supports a roadway, and the minimum Fill Depth, as defined in Section 8.3, is less than 8 feet, a protection against roadway de-icing salts and chlorides by one of the following methods shall be provided:

- Providing an impermeable geomembrane with welded seams in the backfill over the Buried Structure that is sloped to drain water away from the Structure. The membrane shall be a minimum 30 mil thick polyvinyl chloride, ethylene interpolymer alloy, or polyurethane polymer, or a combination of these polymers.
- Preventing Roadway drainage from entering into the fill above the Buried Structure.
- Providing additional metal plate thickness.

Regional WSDOT Maintenance staff shall be consulted to determine the type and frequency of de-icing salts used for the site specific location.

6.7.2.E Abrasion

In addition to service life analysis for corrosion, abrasion of the invert and side walls shall be investigated. The designer shall consider the potential for lateral stream migration when considering abrasion on side walls. Abrasion risk and mitigation shall be considered the same for galvanized or aluminized steel and for aluminum plate structures. Three factors that must combine to cause abrasion include:

1. Abrasive bed load
2. Sufficient stream velocity to carry the bed load
3. Flow duration and frequency

The WSDOT *Hydraulics Manual* M 23-03.06 (2019) provides guidelines for abrasion levels and the general site characteristics, which are described below:

1. Level 1 - Nonabrasive: areas of little or no bed load and very low velocities of 3 feet per second (fps) or less. Slopes are generally less than 1 percent. This condition can be assumed for the soil side of the structure.
2. Level 2 - Low abrasive: areas of minor bed loads of sand, silts and clays with velocities less than 6 fps and slopes generally range from 1 percent to 2 percent.
3. Level 3 - Moderate abrasive: areas of moderate bed loads of sand and gravel with stone sizes up to approximately 3 inches and velocities between 6 and 15 fps. Slopes generally range from 2 percent to 4 percent.
4. Level 4 - Severe abrasive: areas of heavy bed loads of sand, gravel, and rock with stone sizes up to 12 inches and larger and velocities exceeding 15 fps. Slopes are generally greater than 4 percent.

Stream velocities shall be based upon typical flows and water surface elevations for a 2-year event, minimum.

For Abrasion Levels 1 and 2, no additional protection is required.

For Abrasion Level 3, the thickness of the material shall be increased by one or two gages (approximately 1/64 inch) and/or a concrete lining shall be used. Alternatively, other protection such as streambed material or stilling basins are acceptable with the approval of the WSDOT Bridge Design Office.

For Abrasion Level 4, abrasion protection shall be provided such as increased gage thickness, alternative materials, coatings, concrete linings, etc. and shall require approval of the WSDOT Bridge Design Office.

6.8 Bridge Standard Drawings

6.4-A1	Example Framing Plan (PDF 53KB) (DWG 38KB)
6.4-A2	Example Girder Elevation (PDF 61KB) (DWG 56KB)
6.4-A3	Example Girder Details (PDF 76KB) (DWG 75KB)
6.4-A4	Steel Plate Girder Example - Field Splice (PDF 75KB) (DWG 72KB)
6.4-A5	Example - Crossframe Details (PDF 66KB) (DWG 62KB)
6.4-A6	Example - Camber Diagram (PDF 73KB) (DWG 76KB)
6.4-A7	Steel Plate Girder Example - Roadway Section (PDF 71KB) (DWG 81KB)
6.4-A8	Steel Plate Girder Example - Slab Plan (PDF 71KB) (DWG 60KB)
6.4-A9	Example – Handrail(PDF 79KB) (DWG 89KB)
6.4-A10	Example - Box Girder Geometrics and Proportions (PDF 83KB) (DWG 75KB)
6.4-A11	Example - Box Girder Details (PDF 77KB) (DWG 87KB)
6.4-A12	Example - Box Girder Pier Diaphragm Details (PDF 99KB) (DWG 75KB)
6.4-A13	Example - Box Girder Miscellaneous Details (PDF 79KB) (DWG 75KB)
6.4-A14	Example - Access Hatch Details (PDF 66KB) (DWG 96KB)
6.4-A15	NGI-ESW CVN Impact Test for Heat Affected Zone (PDF 86KB) (DWG 85KB)
6.4-A16	Rivet Evaluation Detail (PDF 86KB) (DWG 85KB)
6.4-A17	Structural Steel Notes – Painted (PDF)
6.4-A18	Structural Steel Notes – Weathering Steel (PDF)
6.4-A19	Steel Girder Tension Regions (PDF)

6.99 References

The following publications can provide general guidance for the design of steel structures. Some of this material may be dated and its application should be used with caution.

1. *Steel Bridge Design Handbook* (February, 2022)

   This includes 19 volumes of detailed design references for I-girders and box girders, both straight and curved, utilizing LRFD design. This reference also has 6 detailed design examples for I-girder and box girder bridges, straight and curved.

2. *Composite Steel Plate Girder Superstructures*, by US Steel

   Example tables and charts for complete plate girders, standardized for 34 and 44 ft roadways and HS-20 loading. Many span arrangements and lengths are presented.

3. *Steel Structures, Design and Behavior* by Salmon and Johnson

   A textbook for steel design, formatted to AISC LRFD method. This is a good reference for structural behavior of steel members or components, in detail that is not practical for codes or other manuals.

4. *Design of Welded Structures* by Omer H. Blodgett.

   This publication is quite helpful in the calculation of section properties and the design of individual members. There are sections on bridge girders and many other welded structures. The basics of torsion analysis are included.

5. *Guide to Stability Design Criteria for Metal Structures, Sixth Edition* by Ronald D. Ziemian

6. AASHTO/NSBA Steel Bridge Collaboration Publications

   These publications include several guidelines for design, detailing, fabrication, inspection and erection of steel structures.

7. *A Fatigue Primer for Structural Engineers*, by John Fisher, Geoffrey L Kulak, and Ian F. C. Smith

8. *Steel Construction Manual*, Latest Edition, by American Institute of Steel Construction

   The essential reference for rolled shape properties, design tables, and specifications governing steel design and construction.

9. *Machinery's Handbook*, Latest Edition by Industrial Press

   A reference book for the machine shop practice; handy for thread types, machine tolerances and fits, spring design, etc.

10. *Painting of Steel Bridges and Other Structures*, by Clive H. Hare

    This is a good reference for paint systems, surface preparation, and relative costs, for both bare and previously painted steel. Explanations of how each paint system works, and comparisons of each on the basis of performance and cost are provided.

11. NCHRP Report 314, *Guidelines for the Use of Weathering Steel in Bridges*

    This reference contains detailing information if weathering steel will be used. Protection of concrete surfaces from staining and techniques for providing uniform appearance is provided.

12. Report No. WA-RD 876.1, Low Vertical Clearance Truss Bridges: Risk Assessment and Retrofit Mitigation Study, November 2017, WSDOT Bridge and Structures Office.

Chapter 7 Substructure Design Contents

7.1 General Substructure Considerations 7-1
7.1.1 Foundation Design Process 7-1
7.1.1.A Scoping Level Design 7-1
7.1.1.B Develop Site Data and Preliminary Bridge Plan 7-1
7.1.1.C Preliminary Foundation Design 7-2
7.1.1.D Structural Analysis and Modeling 7-2
7.1.1.E Final Foundation Design 7-3
7.1.2 Foundation Design Limit States 7-3
7.1.3 Seismic Design 7-3
7.1.4 Substructure and Foundation Loads 7-3
7.1.5 Concrete Class for Substructure 7-6
7.1.6 Foundation Seals 7-6
7.1.6.A General Seal Criteria 7-7
7.1.6.A.1 Seal Vent Elevation 7-7
7.1.6.A.2 Scour 7-7
7.1.6.B Spread Footing Seals 7-7
7.1.6.B.1 When a Seal is Required During Construction 7-7
7.1.6.B.2 When a Seal May Not Be Required for Construction . . 7-7
7.1.6.C Deep Foundation Seals 7-8
7.1.7 Scour Requirements 7-8
7.1.7.A Shallow Foundations 7-10
7.1.7.B Deep Foundations 7-10
7.1.7.C Walls Adjacent to Structures 7-12
7.1.7.D Existing Structures 7-12
7.1.7.E Buried Structures 7-12
7.2 Foundation Modeling for Seismic Loads 7-13
7.2.1 General 7-13
7.2.2 Substructure Elastic Dynamic Analysis Procedure 7-13
7.2.3 Bridge Model Section Properties 7-14
7.2.3.A Cracked Properties for Columns 7-14
7.2.3.B Shaft Properties 7-14
7.2.3.C Cast-in-Place Pile Properties 7-15
7.2.4 Bridge Model Verification 7-15
7.2.5 Deep Foundation Modeling Methods 7-16
7.2.5.A Method I – Equivalent Cantilever Column 7-16
7.2.5.B Method II – Equivalent Base Springs 7-16
7.2.5.C Method III – Non-Linear Soil Springs 7-16
7.2.5.D Spring Location (Method II) 7-17
7.2.5.E Boundary Conditions (Method II) 7-17

7.2.5.F Spring Calculation (Method II) . . . 7-18
7.2.5.G Matrix Coordinate Systems (Method II) . . . 7-18
7.2.5.H Matrix Coefficient Definitions (Method II) . . . 7-19
7.2.5.I Group Effects . . . 7-20
7.2.5.J Shaft Caps and Pile Footings . . . 7-20
7.2.6 Lateral Analysis of Piles and Shafts . . . 7-20
7.2.6.A Determination of Tip Elevations . . . 7-20
7.2.6.B Pile and Shaft Design for Lateral Loads . . . 7-23
7.2.7 Spread Footing Modeling . . . 7-24
7.3 Column Design . . . 7-27
7.3.1 General Design Considerations . . . 7-27
7.3.2 Slenderness Effects . . . 7-27
7.3.2.A Moment Magnification Method . . . 7-28
7.3.2.B Second-Order Analysis . . . 7-29
7.3.2.B.1 Design Methods for a Second-Order Analysis . . . 7-29
7.3.2.B.2 Applying Factored Loads . . . 7-29
7.3.2.B.3 Member Properties . . . 7-29
7.3.3 Shear Design . . . 7-30
7.3.4 Column Silos . . . 7-30
7.3.4.A General Design and Detailing Requirements . . . 7-30
7.3.4.B Column Silos Formed From Extending Shaft Casing . . . 7-30
7.3.4.C Column Silos Formed by Other Methods . . . 7-30
7.3.4.D Column Silo Covers and Access Hatches . . . 7-31
7.3.5 Column Reinforcement . . . 7-32
7.3.5.A Reinforcing Bar Material . . . 7-32
7.3.5.B Longitudinal Reinforcement . . . 7-32
7.3.5.C Longitudinal Splices . . . 7-32
7.3.5.D Longitudinal Development . . . 7-33
7.3.5.D.1 Crossbeams . . . 7-33
7.3.5.D.2 Footings . . . 7-35
7.3.5.D.3 Shafts . . . 7-36
7.3.5.E Transverse Reinforcement . . . 7-37
7.3.5.F Spiral Splices and Hoops . . . 7-40
7.3.6 Column and Wall Pier Hinges . . . 7-42
7.3.7 Reduced Column Section . . . 7-43
7.3.7.A Inner Concrete Column . . . 7-44
7.3.7.A.1 Longitudinal Reinforcement . . . 7-44
7.3.7.A.2 Transverse Reinforcement . . . 7-45
7.3.7.A.3 Analytical Plastic Hinge Region . . . 7-45
7.3.7.B Outer Concrete Column . . . 7-45
7.3.7.C Gap in Concrete at Reduced Column Section . . . 7-46

7.4 Crossbeams 7-47
7.4.1 General Design 7-47
7.4.1.A Stage I Design 7-47
7.4.1.B Stage II Design 7-48
7.4.1.C Other Crossbeam Types 7-49
7.5 Abutment Design and Details 7-50
7.5.1 General 7-50
7.5.1.A Abutment Types 7-50
7.5.1.A.1 Stub Abutments 7-50
7.5.1.A.2 Cantilever Abutments 7-51
7.5.1.A.3 Rigid Frame Abutments 7-51
7.5.1.A.4 Bent-Type Abutments 7-52
7.5.1.A.5 Isolated Abutments 7-53
7.5.2 Abutments Supported By Mechanically-Stabilized Earth Walls 7-54
7.5.2.A Single-span Bridges with Precast Slab Superstructures Supported Directly on Reinforced Soil 7-55
7.5.2.B Bridges with spread footing abutments supported by a geosynthetic wall or SE wall 7-58
7.5.3 Embankment at Abutments 7-59
7.5.4 Abutment Loading 7-60
7.5.4.A Dead Load - DC 7-60
7.5.4.B Live Load - LL 7-60
7.5.4.C Earth Pressure - EH, EV 7-60
7.5.4.D Earthquake Load - EQ 7-60
7.5.4.E Bearing Forces - TU 7-60
7.5.5 Temporary Construction Load Cases 7-61
7.5.5.A Superstructure Built after Backfill at Abutment 7-61
7.5.5.B Wing Wall Overturning 7-61
7.5.6 Abutment Bearings and Girder Stops 7-61
7.5.6.A Abutment Bearings 7-61
7.5.6.B Bearing Seats 7-62
7.5.6.C Transverse Girder Stops 7-62
7.5.7 Abutment Expansion Joints 7-63
7.5.8 Open Joint Details 7-63
7.5.9 Construction Joints 7-65
7.5.10 Abutment Wall Design 7-65
7.5.10.A General 7-65
7.5.10.B Temperature and Shrinkage Reinforcement 7-65
7.5.10.C Cross Ties 7-66
7.5.11 Drainage and Backfilling 7-67

7.6 Abutment Wing Walls and Curtain Walls 7-69
7.6.1 Traffic Barrier Loads 7-69
7.6.2 Wing Wall Design 7-69
7.6.3 Wing Wall Detailing 7-69
7.7 Footing Design 7-70
7.7.1 General Footing Criteria 7-70
7.7.1.A Minimum Cover and Footing Depth. 7-70
7.7.1.B Pedestals. 7-71
7.7.2 Loads and Load Factors 7-71
7.7.3 Geotechnical Report Summary. 7-72
7.7.3.A Bearing Resistance - Service, Strength, and Extreme Event Limit States . 7-72
7.7.3.B Sliding Resistance - Strength and Extreme Event Limit States. 7-72
7.7.3.C Foundation Springs - Extreme Event Limit States. 7-72
7.7.4 Spread Footing Design 7-73
7.7.4.A Abutment Spread Footing Force Diagram. 7-73
7.7.4.B Bearing Stress. 7-74
7.7.4.C Failure By Sliding 7-76
7.7.4.D Overturning Stability 7-76
7.7.4.E Footing Settlement 7-76
7.7.4.F Concrete Design 7-77
7.7.4.F.1 Footing Thickness and Shear 7-77
7.7.4.F.2 Footing Force Distribution 7-77
7.7.4.F.3 Vertical Reinforcement (Column or Wall). 7-77
7.7.4.F.4 Bottom Reinforcement 7-77
7.7.4.F.5 Top Reinforcement. 7-78
7.7.4.F.6 Shrinkage and Temperature Reinforcement 7-78
7.7.5 Pile-Supported Footing Design 7-78
7.7.5.A Pile Embedment, Clearance, and Rebar Mat Location 7-79
7.7.5.B Concrete Design 7-79
7.8 Shafts. 7-80
7.8.1 Axial Resistance 7-80
7.8.1.A Embankment Consolidation Downdrag 7-82
7.8.1.B Seismic Liquefaction Downdrag 7-82
7.8.1.C Scour 7-82
7.8.1.D Axial Resistance Group Reduction Factors. 7-83
7.8.2 Structural Design and Detailing 7-84

7.9 Piles and Piling . . . 7-92
7.9.1 Pile Types . . . 7-92
7.9.1.A Cast-in-place Concrete Piles . . . 7-92
7.9.1.B Structural Steel Pipe Piles . . . 7-92
7.9.1.C Steel H Piles . . . 7-92
7.9.1.D Timber Piles . . . 7-92
7.9.1.E Steel Sheet Piles . . . 7-92
7.9.2 Single Pile Axial Resistance . . . 7-93
7.9.3 Block Failure . . . 7-94
7.9.4 Pile Uplift . . . 7-94
7.9.5 Pile Spacing . . . 7-94
7.9.6 Structural Design and Detailing of CIP Concrete Piles . . . 7-94
7.9.7 Pile Splices . . . 7-95
7.9.8 Pile Lateral Design . . . 7-96
7.9.9 Battered Piles . . . 7-96
7.9.10 Pile Tip Elevations and Quantities . . . 7-96
7.9.11 Plan Pile Resistance . . . 7-97
7.10 Concrete-Filled Steel Tubes . . . 7-98
7.10.1 Scope . . . 7-98
7.10.2 Design Requirements . . . 7-99
7.10.2.A Materials . . . 7-99
7.10.2.B Limit States . . . 7-99
7.10.2.C General Dimensions . . . 7-100
7.10.2.D Stiffness . . . 7-100
7.10.2.E Flexure and Axial Resistance . . . 7-100
7.10.2.F Stability Considerations for Unbraced of Partially-braced Members 7-103
7.10.2.G Shear Resistance . . . 7-103
7.10.2.H Corrosion . . . 7-103
7.10.2.I Side resistance . . . 7-103
7.10.3 CFST-to-Cap Annular Ring Connections . . . 7-103
7.10.3.A Annular Ring . . . 7-104
7.10.3.B Embedment . . . 7-106
7.10.3.C Punching Shear . . . 7-106
7.10.3.D Pile Cap and/or Cap Beam Reinforcement . . . 7-106
7.10.4 CFST-to-Cap Reinforced Concrete Connections . . . 7-108
7.10.4.A CFST Requirements . . . 7-108
7.10.4.B Embedment and Concrete Cover . . . 7-109
7.10.4.C Pile Cap and/or Cap Beam Reinforcement . . . 7-110
7.10.5 RCFST-to-Column and CFST-to Column Connections . . . 7-110
7.10.6 Partially-filled CF***S***T . . . 7-112
7.10.7 Construction Requirements . . . 7-112
7.10.8 Notation . . . 7-113

7.11 Bridge Standard Drawings 7-115

7.12 Appendices 7-116

Appendix 7.3-A2 Noncontact Lap Splice Length Column to Shaft Connections. 7-117

Appendix 7-B1 Linear Spring Calculation Method II (Technique I) 7-119

Appendix 7-B2 Pile Footing Matrix Example Method II (Technique I) 7-124

Appendix 7-B3 Non-Linear Springs Method III 7-127

7.99 References 7-129

Chapter 7 Substructure Design

7.1 General Substructure Considerations

Note that in the following guidelines where reference is made to LRFD-BDS the item can be found in the current AASHTO *LRFD Bridge Design Specifications* (LRFD-BDS). And for any reference to LRFD-SGS, the item can be found in the current AASHTO *Guide Specifications for LRFD Seismic Bridge Design* (LRFD-SGS).

7.1.1 Foundation Design Process

A flowchart is provided in which illustrates the overall design process utilized by the WSDOT Bridge and Structures Office to accomplish an LRFD foundation design. Note this process is also outlined in the *Geotechnical Design Manual* Section 8.2. The Bridge and Structures Office (BSO), the State Geotechnical Office (SGO) and the State Hydraulics Office (SHO) have been abbreviated. The steps in the flowchart are defined as follows:

7.1.1.A Scoping Level Design

This phase of the design process involves the region requesting initial bridge options and costs for a future project. Depending on the complexity of the project, this phase could include a Type, Size and Location (TS&L) Report.

This design step may result in informal communication between the BSO and the SGO and/or SHO with the request for preliminary information and recommendations. The level of communication will depend on the available information provided by the region and the complexity of the project. The type of information that may be received from the SGO and SHO are as follows:

- Anticipated soil site conditions.
- Maximum embankment slopes.
- Possible foundation types and geotechnical hazards such as liquefaction.
- Scour potential for piers if a water crossing.
- Potential for future migration of a stream or river crossing.

In general, these recommendations rely on existing site data. Site borings may not be available and test holes are drilled later. The SGO provides enough information to select potential foundation types for an initial scoping level or TS&L level plan and estimate.

7.1.1.B Develop Site Data and Preliminary Bridge Plan

In the second phase, the BSO obtains site data from the region, see Section 2.2, and develops the preliminary bridge plan. The preliminary pier locations determine soil boring locations at this time. The SGO and/or the SHO may require the following information to continue their preliminary design.

- Structure type and magnitude of settlement the structure can tolerate (both total and differential).
- At abutments – Approximate maximum top of foundation elevation.
- At interior piers – The initial size, shape and number of columns and how they are configured with the foundation (e.g., whether a single foundation element supports each column, or one foundation element supports multiple columns)

- At water crossings – Pier scour depth, if known, and any potential for migration of the water crossing in the future. Typically, the SGO and the BSO should coordinate pursuing this information with the HB.
- Any known structural constraints that affect the foundation type, size, or location.
- Any known constraints that affect the soil resistance (utilities, construction staging, excavation, shoring, and falsework).

7.1.1.C Preliminary Foundation Design

The third phase is a request by the BSO for a preliminary foundation memorandum. The GB memo will provide preliminary soil data required for structural analysis and modeling. This includes any subsurface conditions and the preliminary subsurface profile.

The concurrent geotechnical work at this stage includes:

- Completion of detailed boring logs and laboratory test data.
- Development of foundation type, soil capacity, and foundation depth.
- Development of static/seismic soil properties and ground acceleration.
- Recommendations for constructability issues.

The BSO may also request the HB to provide preliminary scour design recommendations if the structure is located over a water crossing.

7.1.1.D Structural Analysis and Modeling

In the fourth phase, the BSO performs a structural analysis of the superstructure and substructure using a bridge model and preliminary soil parameters. Through this modeling, the designer determines loads and sizes for the foundation based on the controlling LRFD limit states. Structural and geotechnical design continues to investigate constructability and construction staging issues during this phase.

In order to produce a final Geotechnical Report, the BSO provides the following structural feedback to the SGO:

- Foundation loads for service, strength, and extreme limit states.
- Foundation size/diameter and depth required to meet structural design.
- Foundation details that could affect the geotechnical design of the foundations.
- Foundation layout plan.
- Assumed scour depths for each limit state (if applicable)

For water crossings, the BSO also provides the information listed above to the State Hydraulic Engineer to verify initial scour and hydraulics recommendations are still suitable for the site.

(See Chapter 2 for examples of pile design data sheets that shall be filled out and submitted to the SGO at the early stage of design.)

7.1.1.E Final Foundation Design

The last phase completes the Geotechnical Report and allows the final structural design to begin. The preliminary geotechnical assumptions are checked and recommendations are modified, if necessary. The final report is complete to a PS&E format since the project contract will contain referenced information in the Geotechnical Report, such as:

- All geotechnical data obtained at the site (boring logs, subsurface profiles, and laboratory test data).
- All final foundation recommendations.
- Final constructability and staging recommendations.

The designer reviews the final report for new information and confirms the preliminary assumptions. With the foundation design complete, the final bridge structural design and detailing process continues to prepare the bridge plans. Following final structural design, the structural designer shall follow up with the geotechnical designer to ensure that the design is within the limits of the Geotechnical Report.

7.1.2 Foundation Design Limit States

The controlling limit states for WSDOT projects for substructure design are described as follows:

Strength I	Relating to the normal vehicular use
Strength III	Relating to the bridge exposed to wind
Strength V	Relating to the normal vehicular use and wind
Extreme-Event I	Relating to earthquake
Service I	Relating to normal operational use and wind

7.1.3 Seismic Design

The seismic design of all substructures shall be in accordance with the LRFD-SGS - except as noted otherwise.

7.1.4 Substructure and Foundation Loads

Figure 7.1.4-1 below provides a common basis of understanding for load location and orientations for substructure design. This figure also shows elevations required for abutment and substructure design. Note that for shaft and some pile foundation designs, the shaft or pile may form the column as well as the foundation element.

Spread footings usually have a design orientation normal to the footing. Since bridge loads are longitudinal and transverse, skewed superstructure loads are converted (using vector components) to normal and parallel footing loads. Deep foundation analysis usually has a normal/parallel orientation to the pier in order to simplify group effects.

Substructure elements are to carry all of the loads specified in LRFD-SGS and LRFD-BDS. Selecting the controlling load conditions requires good judgment to minimize design time. All anticipated dead load (*DC*) conditions shall be accounted for during a substructure design. Sidesway effect shall be included where it tends to increase stresses. For live loads (*LL*), the dynamic allowance (*IM*) shall be applied in accordance with LRFD-BDS Section 3.6.2 and is not included in the design of buried elements of the substructure. Portions of the abutments in contact with the soil are considered buried elements.

Figure 7.1.1-1 Overall Design Process for LRFD Foundation Design

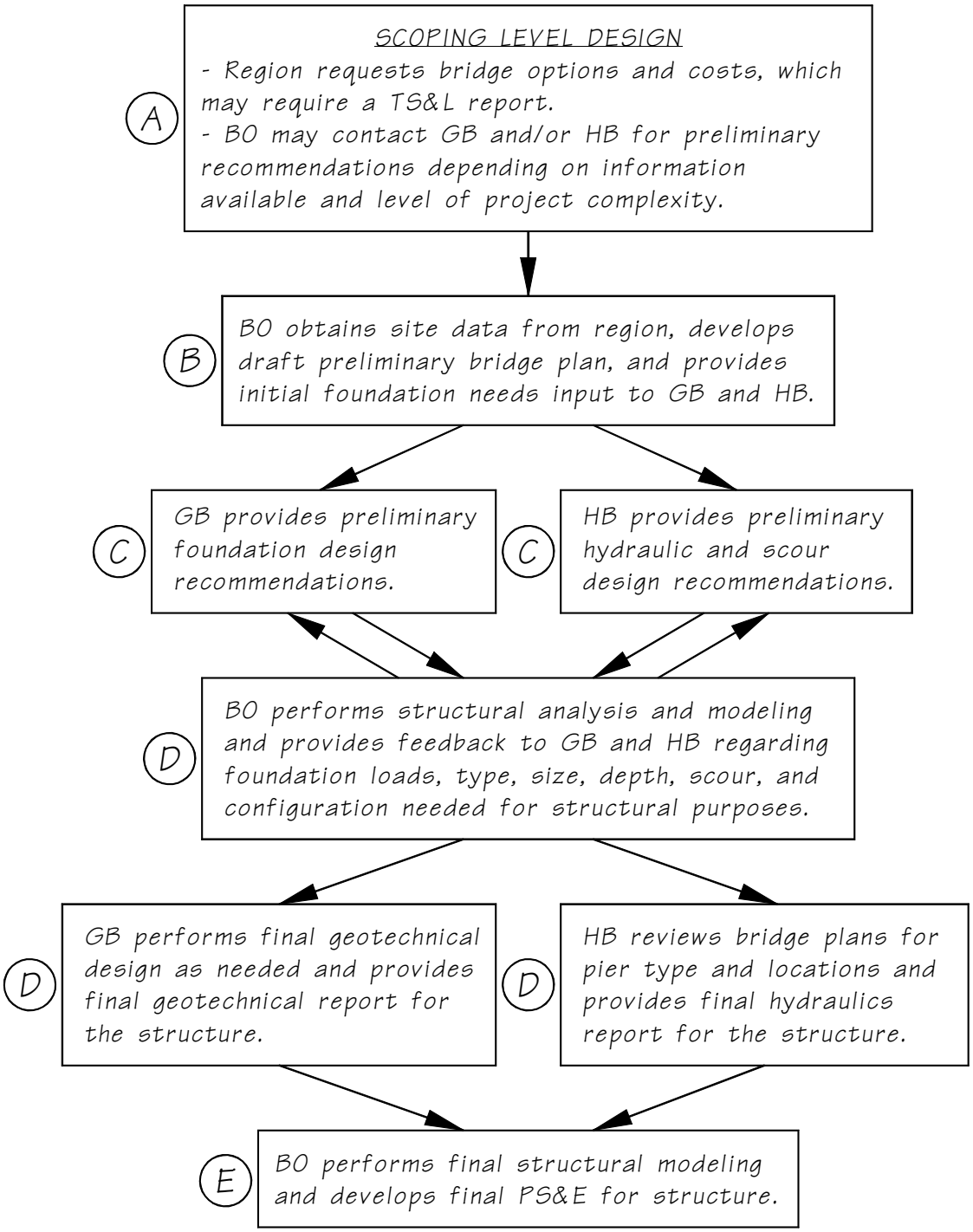

Bridge design shall consider construction loads to ensure structural stability and prevent members from overstress. For example, temporary construction loads caused by placing all of the precast girders on one side of a crossbeam can overload a single column pier. Construction loads shall also include live loads from potential construction equipment. The plans shall show a construction sequence and/or notes to avoid unacceptable loadings.

On curved bridges, the substructure design shall consider the eccentricity resulting from the difference in girder lengths and the effects of torsion. When superstructure design uses a curved girder theory, such as the V-Load Method, the reactions from such analysis must be included in the loads applied to the substructure.

Figure 7.1.4-1 Substructure Directional Forces

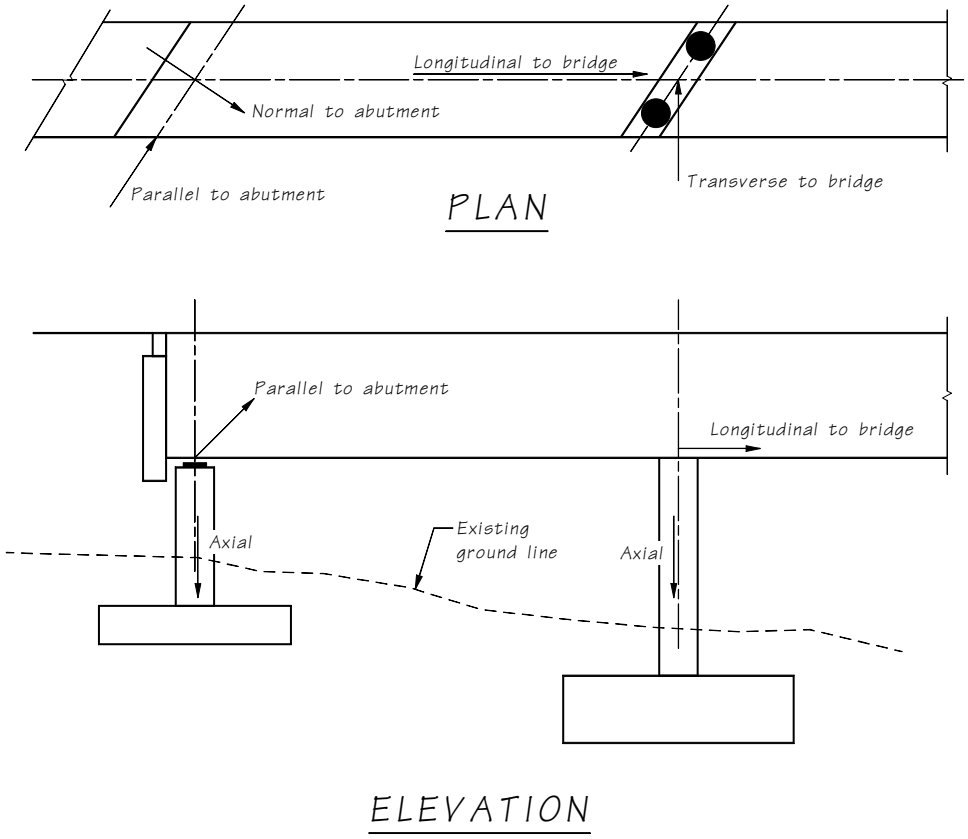

7.1.5 Concrete Class for Substructure

The concrete class for all substructure elements shall be Class 4000. This includes footings, pedestals, massive piers, columns, crossbeams, traffic barriers, and retaining walls, wing walls, and curtain walls connected to the bridge substructure or superstructure. Foundation seals shall be Class 4000W. Shafts and cast-in-place piles shall be Class 5000P. Concrete Class 4000P may be used for elements other than bridge foundations.

7.1.6 Foundation Seals

A concrete seal within the confines of a cofferdam permits construction of a pier footing and column in the dry. This type of underwater construction is practical to a water depth of approximately 50 feet.

Seal concrete is placed underwater with the use of a tremie. A tremie is a long pipe that extends to the bottom of the excavation and permits a head to be maintained on the concrete during placement. After the concrete has been placed and has obtained sufficient strength, the water within the cofferdam is removed. In Figure 7.1.6-1, some of the factors that must be considered in designing a seal are illustrated.

Figure 7.1.6-1 Foundation Seal

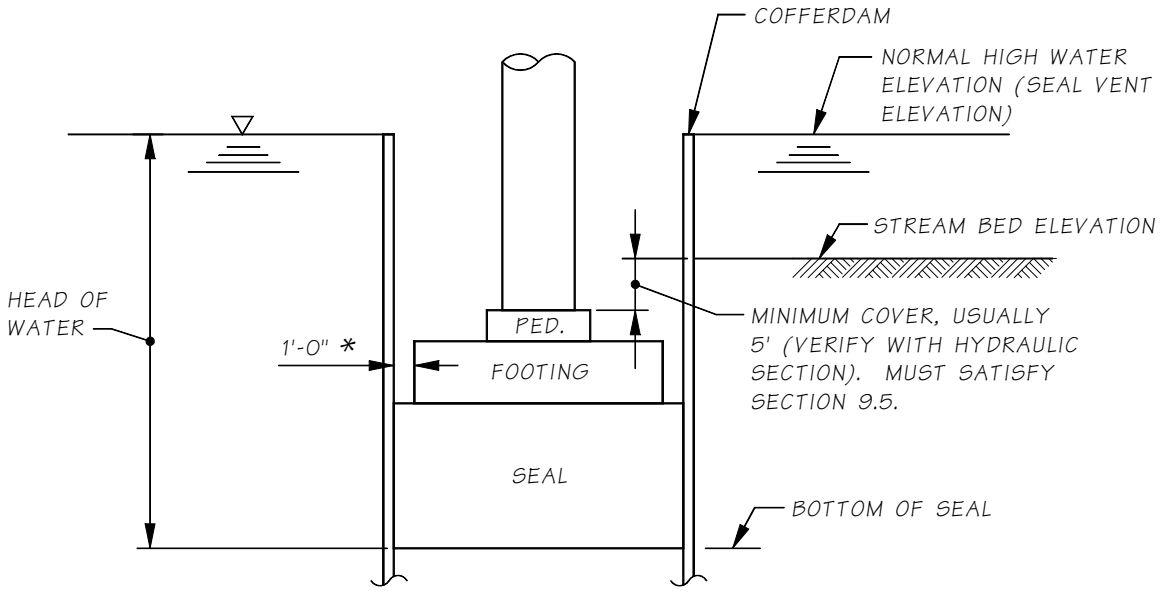

7.1.6.A General Seal Criteria

An expected normal high water surface elevation is defined as the highest water surface elevation that may normally be expected to occur during construction of the structure. This will be the elevation of the seal vent, and is provided in coordination with the State Hydraulics Office, on the hydraulics data sheet.

7.1.6.A.1 *Seal Vent Elevation*

The State Hydraulics Office recommends a seal vent elevation in accordance with the following criteria.

1. **Construction Time Period Not Known**

   If the time period of the footing construction is not known, the vent elevation reflects the normal high water elevation that might occur at any time during the year.

2. **Construction Time Period Known**

   If the time period of the footing construction can be anticipated, the vent elevation reflects the normal high water elevation that might occur during this time period. (If the anticipated time period of construction is later changed, the State Hydraulics Office shall be notified and appropriate changes made in the design.)

7.1.6.A.2 *Scour*

Since adding a seal can affect the amount of scour, the seal information shall be provided to the State Hydraulics Office for their scour analysis.

7.1.6.B Spread Footing Seals

The SGO will generally recommend whether a foundation seal may or may not be required for construction. Bearing loads are the column moments applied at the base of the footing and vertical load applied at the bottom of the seal. The seal is sized for the soil bearing capacity. Overturning stability need only be checked at the base of the pier footing.

7.1.6.B.1 *When a Seal is Required During Construction*

At a minimum, the top of footing shall be below the total scour depth at the check flood. See Section 7.1.7.

Spread footing final design shall include the dead load weight of the seal.

7.1.6.B.2 *When a Seal May Not Be Required for Construction*

Both methods of construction are detailed in the plans when it is not clear if a seal is required for construction. The plans must detail a footing with a seal and an alternate without a seal. The plan quantities are based on the footing designed with a seal. If the alternate footing elevation is different from the footing with seal, it is also necessary to note on the plans the required changes in rebar such as length of column bars, increased number of ties, etc. Note that this requires the use of either General Special Provision (GSP) 6-02.3(6)B.OPT1.GB6 or 6-02.3(6)B.OPT2.GB6.

7.1.6.C Deep Foundation Seals

The top of footing, or pedestal, is set by the footing cover requirements or by total scour at the scour check flood determined by the State Hydraulics Office. See Section 7.1.7. A preliminary analysis is made using the estimated footing and seal weight, and the column moments and vertical load at the base of the footing to determine the number of piles and spacing. The seal size shall be 1′-0″ larger than the footing all around.

In general seal design requires determining a thickness such that the seal weight plus any additional resistance provided by the bond stress between the seal concrete and any piling is greater than the buoyant force (determined by the head of water above the seal). If the bond stress between the seal concrete and the piling is used to determine the seal thickness, the uplift capacity of the piles must be checked against the loads applied to them as a result of the bond stress. The bond between seal concrete and piles is typically assumed to be 10 psi. The minimum seal thickness is 1′-6″.

7.1.7 Scour Requirements

Scour can affect the bridge structure, adjacent wall structures, and the bridge embankment. The bridge structure shall be designed for total scour. Total scour for the bridge structure may take into account scour countermeasures, if certain criteria are met, as explained in the sections below. If scour countermeasures are designed and constructed following guidance from the most recent version of the *Hydraulics Manual*, then walls and embankments benefit as explained in the sections below.

All bridge foundations shall be designed for total scour regardless of bridge type, location, and usage. Bridge foundations shall be designed by the bridge designers for total scour considering the following two conditions:

1. 1. At Service and Strength Limit States: For the scour design flood, the streambed material above the total scour line shall be assumed to have been removed for design conditions. The State Hydraulics Office provides the total scour elevation corresponding to the scour design flood.
2. At Extreme Limit States (Earthquake and Scour): Two separate extreme cases shall be evaluated when verifying the stability of the bridge foundation.
   - Extreme Case I – 50% of the total scour design flood depth plus seismic
   - Extreme Case II – 100% of the scour check flood depth

Unless otherwise specified, the top of footing locations for bridges shall be based on total scour at the scour check flood, and design shall be based on the total scour at the scour design flood or scour check flood depending on the controlling load case. If there is lateral migration, then the determination of total scour during both the scour design flood and the scour check flood shall account for the migrated state.

Total scour is determined by the State Hydraulics Office. Figure 7-6 in the *Hydraulics Manual* shows the various contributions on total scour along with lateral migration.

Figure 7.1.7-1 as well as the following subsections provide guidance on top of footing or cap elevations.

Figure 7.1.7-1 Foundation Scour Effects

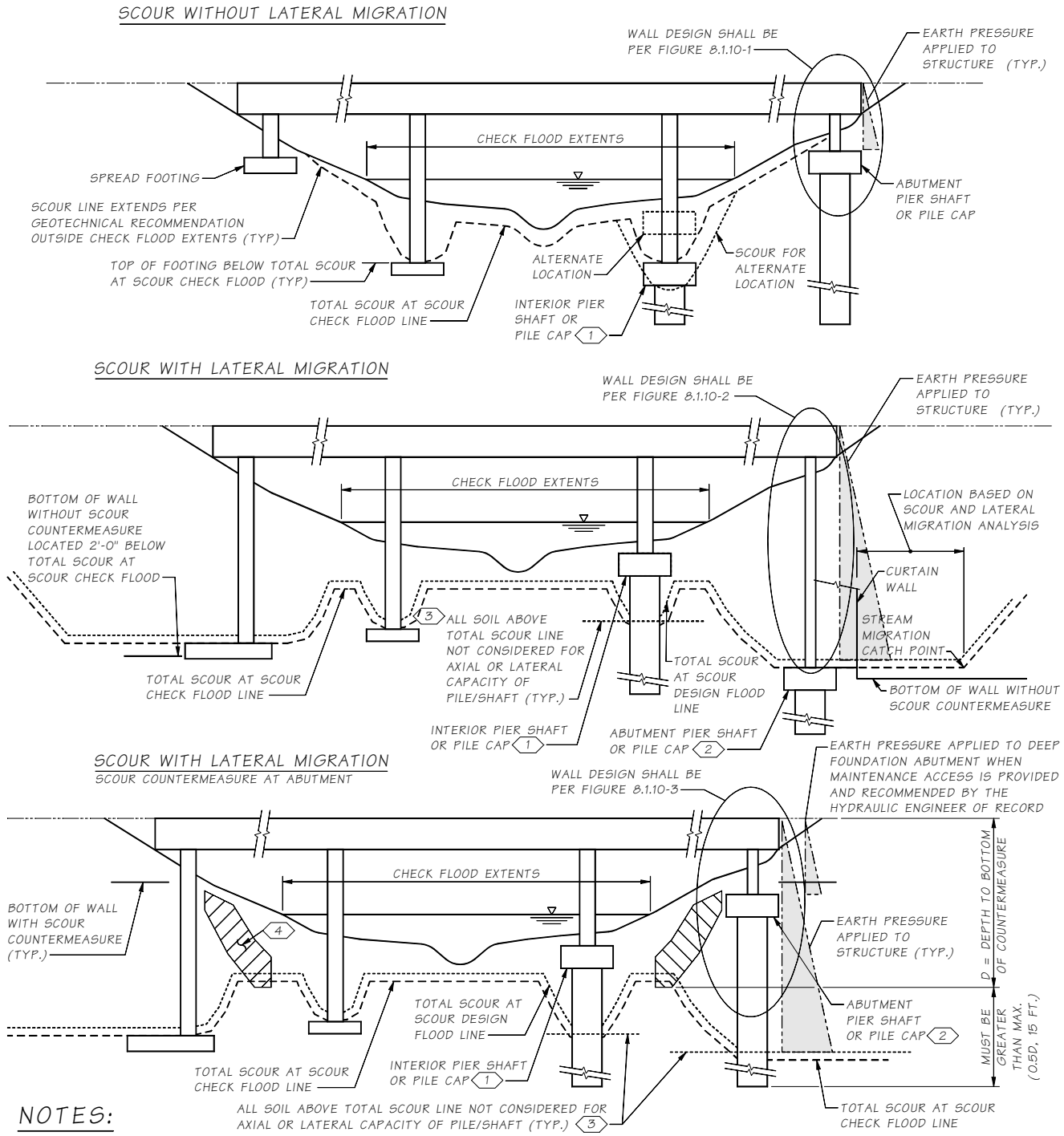

NOTES:

1. INTERIOR PIER SHAFT OR CAP MAY BE LOCATED ABOVE THE TOTAL SCOUR AT THE SCOUR CHECK FLOOD LINE AS LONG AS THE FOUNDATION IS DESIGNED FOR THIS CONDITION. BOTH HYDRAULIC AND GEOTECHNICAL RECOMMENDATIONS SHALL ACCOUNT FOR THE EXPOSED FOUNDATION GEOMETRY. THE EFFECT OF THE SCOUR PRISM ON THE CAPACITY OF THE SHAFT MAY FOLLOW FIGURE 10-18 OF THE FHWA GEC10 MANUAL.

2. ABUTMENT PIER SHAFT CAP OR PILE CAP MAY BE LOCATED ABOVE THE TOTAL SCOUR AT THE SCOUR CHECK FLOOD LINE IF A SCOUR COUNTERMEASURE DESIGNED AND CONSTRUCTED FOLLOWING THE HYDRAULICS MANUAL HAS BEEN ADDED AT THE BRIDGE END AND THE FOUNDATION IS DESIGNED TO ACCOUNT FOR THE CAP BEING LOCATED AT A HIGHER ELEVATION. BOTH HYDRAULIC AND GEOTECHNICAL RECOMMENDATIONS SHALL ACCOUNT FOR THE EXPOSED FOUNDATION GEOMETRY. EARTH PRESSURE ON ABUTMENT SHALL BE PER FIGURE 7.1.7-2. WHEN SCOUR COUNTERMEASURE IS NOT RECOMMENDED TO PREVENT SCOUR BY THE HYDRAULIC ENGINEER OF RECORD OR NO MAINTENANCE ACCESS IS PROVIDED.

3. ONLY THE UPPER HALF OF THE TOTAL SCOUR FOR SCOUR DESIGN FLOOD IS IGNORED FOR EXTREME EVENT CASE I.

4. COUNTERMEASURES SHALL BE PLACED OUTSIDE THE MINIMUM HYDRAULIC WIDTH. LIMITS OF THE COUNTERMEASURE ARE BASED ON SCOUR AND LATERAL MIGRATION ANALYSIS. SCOUR COUNTERMEASURES SHOWN FOR GRAPHICAL PURPOSES ONLY, AND SHALL BE DESIGNED AND CONSTRUCTED PER THE HYDRAULIC MANUAL.

7.1.7.A Shallow Foundations

Shallow foundations supporting interior piers and abutments on soil or erodible rock shall be located so that the top of footing is below the total scour at the scour check flood. The presence of scour countermeasures does not change the elevation in relation to scour of the shallow foundations.

If a bridge abutment footing is reliant on a retaining wall, the wall shall be designed for the total scour depth, regardless of the presence of a scour countermeasure. The retaining wall shall have continuous structural concrete or continuous fascia that extends 2 feet below the total scour at the scour check flood. The length of such a wall shall be determined by performing an assessment to ensure the stability of the wall and structure element through the range of anticipated scour and lateral migration.

Shallow foundations on scour-resistant bedrock shall be designed and constructed to maintain the integrity of the supporting rock and shall be located such that the bottom of footing is at or below the top of the scour resistant material.

7.1.7.B Deep Foundations

At bridge abutments without scour countermeasures designed and constructed per the most recent *Hydraulics Manual*, deep foundations such as drilled shafts or driven piles, with pile or shaft caps, shall be located such that the top of pile or shaft cap is located below the total scour at the scour check flood. Scour countermeasures shall not be placed at interior piers. For interior piers, or at bridge abutments with scour countermeasures designed and constructed per the most recent *Hydraulics Manual* guidelines, the top of foundation may be located above the total scour at the scour check flood elevation. There may be select structures where the pile or shaft cap may be located above the total scour at the scour check flood at abutments without scour countermeasures if there is concurrence with the State Hydraulic Engineer, the State Foundation Engineer, the State Bridge Design Engineer, and the Region Manager, as well as the structure not being located on a T1 freight route or a lifeline route.

When the top of shaft or pile cap is located above the total scour elevation, the hydraulic and geotechnical recommendations shall account for the exposed foundation geometry. The foundation shall be designed assuming that the soil above the total scour elevation has been removed; or half the depth above the total scour at the scour design flood in Extreme Event Case I.

Soil arching conditions behind the shafts shall be assumed to the total scour elevation at the scour design flood, requiring the full-depth earth pressures to be applied from behind the shafts and shaft cap as shown in Figure 7.1.7-2.

Figure 7.1.7-2 Scour Effects with Lateral Migration

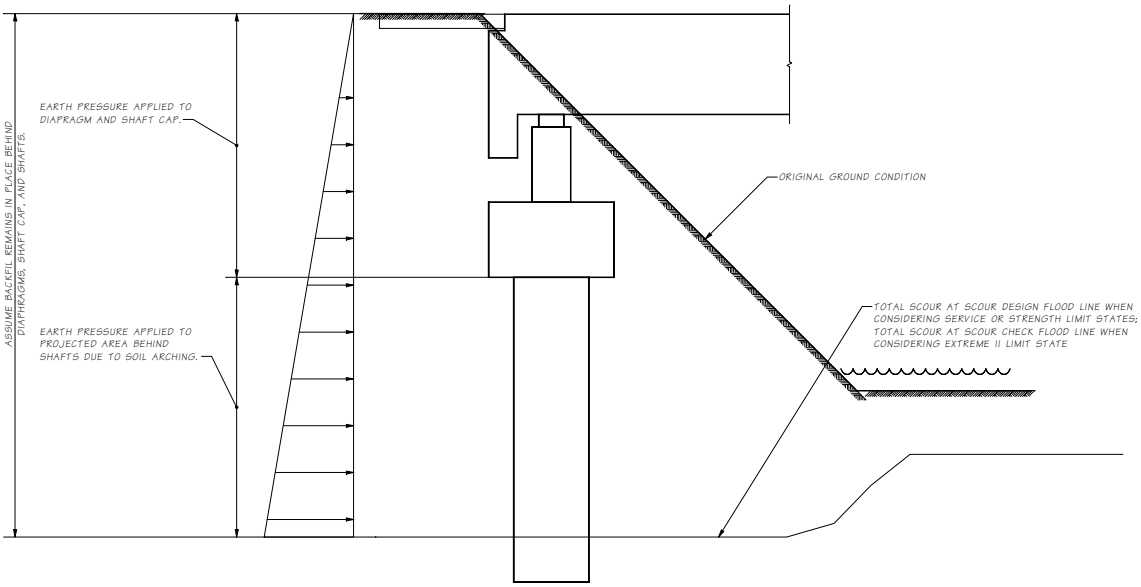

The deep foundation abutment (those supported on drilled shafts, piles, or concrete filled steel tubes (CFST)) may be designed assuming the soil protected by the scour countermeasure remains in place if the following conditions are met:

1. Maintenance access is provided from the roadway to the countermeasures. See Roadside Manual 830 for more information related to maintenance access.
2. Rock for Erosion and Scour Protection gradation shall exceed the required gradation by one class.
3. All requirements are met per the *Hydraulics Manual*.
4. A general note shall be added to the bridge sheets indicating that the deep foundation design assumed the soil protected by the scour countermeasure remains in place.
5. Deep foundations shall extend below the lowest design elevation of the adjacent scour countermeasure at least to a minimum vertical distance that is the greater of 15 feet or 50 percent of the height between roadway grade near top of abutment and the lowest design elevation of the adjacent scour countermeasure. The bearing pressure under a pile or shaft cap shall not contribute to the resistance of the vertical loads.

If any of these requirements are not met, then the deep foundation shall be designed assuming that the soil above the total scour depth has been removed whether there is a scour countermeasure in place or not.

Lateral analysis of the shafts shall be determined using the forces from Figure 7.1.7-2 and ignoring all soil down to the total scour depth (or 50% of the total scour depth) for the particular load case. Axial capacity of the shafts shall be determined by ignoring the soil resistance above the total scour depth (or 50% of the total scour depth) for the particular load case.

The total scour prism on the capacity of the shaft may follow Figure 10-18 of the 2018 FHWA GEC10 Manual, which is shown in Figure 7.1.7-3.

Figure 7.1.7-3 Illustration of Total Scour Prism and Effects on Drilled Shaft

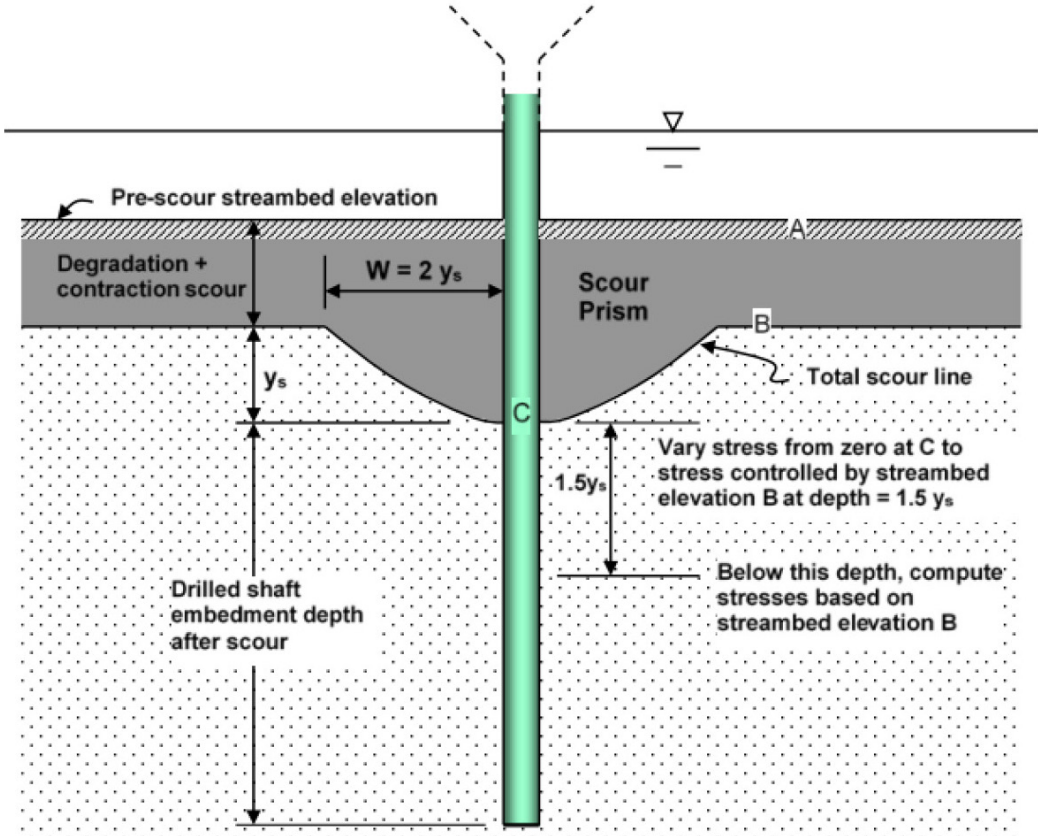

7.1.7.C Walls Adjacent to Structures

The length of walls adjacent to structures that do not have a scour countermeasure designed and constructed per the latest State *Hydraulics Manual* guidelines shall be determined by performing an assessment to ensure the stability of the wall and structure element through the range of anticipated scour and lateral migration. See BDM Figure 8.1.10-2 for additional information.

See Section A for retaining walls used to support bridge abutments.

7.1.7.D Existing Structures

When an existing structure is modified due to a widening, retrofit, etc. that would effect scour, the State Hydraulics Office and the Bridge Preservation Office shall be contacted to access scour as a repair may be required.

7.1.7.E Buried Structures

Three sided buried structures are supported by shallow or deep foundations, and therefore foundation guidance regarding scour shall follow that in the sections above.

Four sided buried structures shall be positioned such the top of the bottom slab is located a minimum of 2 feet below total scour at the scour design flood.

Wall lengths for buried structures shall be determined by performing an assessment to ensure the stability of the wall and structure element through the range of anticipated scour and lateral migration.

7.2 Foundation Modeling for Seismic Loads

7.2.1 General

Bridge modeling for seismic events shall be in accordance with requirements of the LRFD-SGS Section 5, "Analytical Models and Procedures." The following guidance is for elastic dynamic analysis. Refer to LRFD-SGS Section 5.4 for other dynamic analysis procedures.

7.2.2 Substructure Elastic Dynamic Analysis Procedure

The following is a general description of the iterative process used in an elastic dynamic analysis. ***Note:*** An elastic dynamic analysis is needed to determine the displacement demand, Δ_D. The substructure elements are first designed using Strength, Service or Extreme II limit state load cases prior to performing the dynamic analysis.

1. Build a Finite Element Model (FEM) to determine initial structure response (*EQ*+*DC*). Assume that foundation springs are located at the bottom of the column.

   A good initial assumption for fixity conditions of deep foundations (shafts or piles) is to add 10′ to the column length in stiff soils and 15′ to the column in soft soils.

   Use multi-mode response spectrum analysis to generate initial displacements.

2. Determine foundation springs using results from the seismic analysis in the longitudinal and transverse directions. ***Note:*** The load combinations specified in LRFD-SGS Section 4.4 shall NOT be used in this analysis.

3. For spread footing foundations, the FEM will include foundation springs calculated based on the footing size as calculated in Section 7.2.7. No iteration is required unless the footing size changes. ***Note:*** For Site Classes A and B the LRFD-SGS allows spread footings to be modeled as rigid or fixed.

4. For deep foundation analysis, the FEM and the soil response program must agree or converge on soil/structure lateral response. In other words, the moment, shear, deflection, and rotation of the two programs should be within 10 percent. More iteration will provide convergence much less than 1 percent. The iteration process to converge is as follows:

   A. Apply the initial FEM loads (moment and shear) to a p-y type soil response program such as LPILE (including LPILE, LPILE-SHAFT and LPILE-GROUP).

   B. Calculate foundation spring values for the FEM. ***Note:*** The load combinations specified in LRFD-SGS Section 4.4 shall not be used to determine foundation springs.

   C. Re-run the seismic analysis using the foundation springs calculated from the soil response program. The structural response will change. Check to insure the FEM results (*M*, *V*, Δ, θ, and spring values) in the transverse and longitudinal direction are within 10 percent of the previous run. This check verifies the linear spring, or soil response (calculated by the FEM) is close to the predicted nonlinear soil behavior (calculated by the soil response program). If the results of the FEM and the soil response program differ by more than 10 percent, recalculate springs and repeat steps (a) thru (c) until the two programs converge to within 10 percent.

      Special note for single column/single shaft configuration: The seismic design philosophy requires a plastic hinge in the substructure elements above ground (preferably in the columns). Designers should note the magnitude of shear and

moment at the top of the shaft, if the column "zero" moment is close to a shaft head foundation spring, the FEM and soil response program will not converge and plastic hinging might be below grade.

Throughout the iteration process it is important to note that any set of springs developed are only applicable to the loading that was used to develop them (due to the inelastic behavior of the soil in the foundation program). This can be a problem when the forces used to develop the springs are from a seismic analysis that combines modal forces using a method such as the Complete Quadratic Combination (CQC) or other method. The forces that result from this combination are typically dominated by a single mode (in each direction as shown by mass participation). This results in the development of springs and forces that are relatively accurate for that structure. If the force combination (CQC or otherwise) is not dominated by one mode shape (in the same direction), the springs and forces that are developed during the above iteration process may not be accurate.

LPILE may be used for a pile group supported footing. Pile or shaft foundation group effects for lateral loading shall be taken as recommended in the project Geotechnical Report.

7.2.3 Bridge Model Section Properties

In general, gross section properties may be assumed for all FEM members, except concrete columns.

7.2.3.A Cracked Properties for Columns

Effective section properties shall be in accordance with the LRFD-SGS Section 5.6.

7.2.3.B Shaft Properties

The shaft concrete strength and construction methods lead to significant variation in shaft stiffness described as follows.

For a stiff substructure response:

1. Use f'_c to calculate the modulus of elasticity.
2. Use I_g based on the maximum oversized shaft diameter allowed by *Standard Specifications* Section 6-19.
3. When permanent casing is specified, increase shaft Ig using the transformed area of a ¾″ thick casing, or the actual casing thickness for CFSTs. Since the contractor will determine the thickness of the casing in non CFSTs, ¾″ is a conservative estimate for design.

For a soft substructure response:

1. Use f'_c to calculate the modulus of elasticity.
2. Use I_g based on the nominal shaft diameter. Alternatively, I_e may be used when it is reflective of the actual load effects in the shaft.
3. When permanent casing is specified, increase *I* using the transformed area of a ⅜″ thick casing , or use the casing thickness accounting for corrosion loss for CFSTs.

   Since the contractor will determine the thickness of the casing. In non CFSTs, ⅜″ is a minimum estimated thickness for design.

7.2.3.C Cast-in-Place Pile Properties

For a stiff substructure response:

1. Use 1.5 f'_c to calculate the modulus of elasticity. Since aged concrete will generally reach a compressive strength of at least 6 ksi when using a design strength of 4 ksi, the factor of 1.5 is a reasonable estimate for an increase in stiffness.
2. Use the pile I_g plus the transformed casing moment of inertia.

$$I_{pile} = I_g + (n)(I_{shell}) + (n-1)\left(I_{reinf}\right) \quad (7.2.3\text{-}1)$$

Where:

n = E_s/E_c

Use a steel casing thickness of ¼″ for piles less than 14″ in diameter, ⅜″ for piles 14″ to 18″ in diameter, and ½″ for larger piles.

Note: These casing thicknesses are to be used for analysis only, the contractor is responsible for selecting the casing thickness required to drive the piles.

For a soft substructure response:

1. Use 1.0 f'_c to calculate the modulus of elasticity.
2. Use pile I_g, neglecting casing properties.

7.2.4 Bridge Model Verification

As with any FEM, the designer should review the foundation behavior to ensure the foundation springs correctly imitate the known boundary conditions and soil properties. Watch out for mismatch of units.

All finite element models must have dead load static reactions verified and boundary conditions checked for errors. The static dead loads must be compared with hand calculations or another program's results. For example, span member end moment at the supports can be released at the piers to determine simple span reactions. Then hand calculated simple span *dead load* or PGsuper *dead load* and *live load* is used to verify the model.

Crossbeam behavior must be checked to ensure the superstructure *dead load* is correctly distributing to substructure elements. A 3D bridge line model concentrates the superstructure mass and stresses to a point in the crossbeam. Generally, interior columns will have a much higher loading than the exterior columns. To improve the model, crossbeam I_g should be increased to provide the statically correct column *dead load* reactions. This may require increasing I_g by about 1000 times. Many times this is not visible graphically and should be verified by checking numerical output. Note that most finite element programs have the capability of assigning constraints to the crossbeam and superstructure to eliminate the need for increasing the I_g of the crossbeam.

Seismic analysis may also be verified by hand calculations. Hand calculated fundamental mode shape reactions will be approximate; but will ensure design forces are of the same magnitude.

Designers should note that additional mass might have to be added to the bridge FEM for seismic analysis. For example, traffic barrier mass and crossbeam mass beyond the last column at piers may contribute significant weight to a two-lane or ramp structure.

7.2.5 Deep Foundation Modeling Methods

A designer must assume a foundation support condition that best represents the foundation behavior. Deep foundation elements attempt to imitate the non-linear lateral behavior of several soil layers interacting with the deep foundation. The bridge FEM then uses the stiffness of the element to predict the seismic structural response. Models using linear elements that are not based on non-linear soil-structure interaction are generally considered inaccurate for soil response/element stress and are not acceptable. There are three methods used to model deep foundations (FHWA Report No. 1P-87-6). Of these three methods the Bridge and Structures Office prefers Method II for the majority of bridges.

7.2.5.A Method I – Equivalent Cantilever Column

This method assumes a point of fixity some depth below the bottom of the column to model the stiffness of the foundation element. This shall only be used for a preliminary model of the substructure response in SDC C and D.

7.2.5.B Method II – Equivalent Base Springs

This method models deep foundations by using a {6x6} matrix. There are two techniques used to generate the stiffness coefficients for the foundation matrix. The equivalent stiffness coefficients assessed are valid only at the given level of loading. Any changes of the shaft-head loads or conditions will require a new run for the program to determine the new values of the equivalent stiffness coefficients. These equivalent stiffness coefficients account for the nonlinear response of shaft materials and soil resistance.

Technique I – The matrix is generated, using superposition, to reproduce the non-linear behavior of the soil and foundation at the maximum loading. With Technique I, 10 terms are produced, 4 of these terms are "cross couples." Soil response programs analyze the non-linear soil response. The results are then used to determine the equivalent base springs. See Appendix 7-B1 for more information.

Technique II – The equivalent stiffness matrix generated using this technique uses only the diagonal elements (no cross coupling stiffnesses). This technique is recommended to construct the foundation stiffness matrix (equivalent base springs).

In Technique II the "cross couple" effects are internally accounted for as each stiffness element and displacement is a function of the given Lateral load (*P*) and Moment (*M*). Technique II uses the total response ($\Delta_{t(P,M)}$ $\theta_{t(P,M)}$) to determine displacement and equivalent soil stiffness, maintaining a nonlinear analysis. Technique I requires superposition by adding the individual responses due to the lateral load and moment to determine displacement and soil stiffness. Using superposition to combine two nonlinear responses results in errors in displacement and stiffness for the total response as seen in the Figure 7.2.5-1. As illustrated, the total response due to lateral load (*P*) and moment (*M*) does not necessarily equal the sum of the individual responses.

7.2.5.C Method III – Non-Linear Soil Springs

This method attaches non-linear springs along the length of deep foundation members in a FEM model. See Appendix 7-B2 for more information. This method has the advantage of solving the superstructure and substructure seismic response simultaneously. The soil springs must be nonlinear PY curves and represent the soil/structure interaction. This cannot be done during response spectrum analysis with some FEM programs.

7.2.5.D Spring Location (Method II)

The preferred location for a foundation spring is at the bottom of the column. This includes the column mass in the seismic analysis. For design, the column forces are provided by the FEM and the soil response program provides the foundation forces. Springs may be located at the top of the column. However, the seismic analysis will not include the mass of the columns. The advantage of this location is the soil/structure analysis includes both the column and foundation design forces.

Figure 7.2.5-1 Limitations on the Technique I (Superposition Technique)

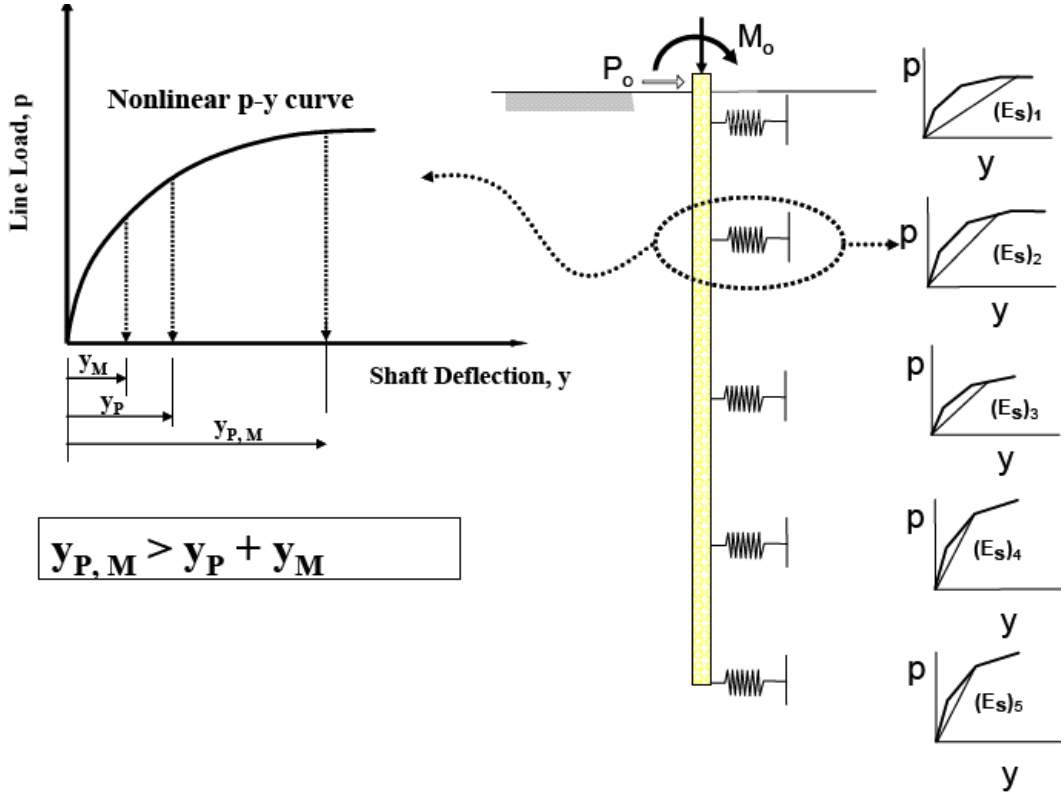

Designers should be careful to match the geometry of the FEM and soil response program. If the location of the foundation springs (or node) in the FEM does not match the location input to the soil response program, the two programs will not converge correctly.

7.2.5.E Boundary Conditions (Method II)

To calculate spring coefficients, the designer must first identify the predicted shape, or direction of loading, of the foundation member where the spring is located in the bridge model. This will determine if one or a combination of two boundary conditions apply for the transverse and longitudinal directions of a support.

A fixed head boundary condition occurs when the foundation element is in double curvature where translation without rotation is the dominant behavior. Stated in other terms, the shear causes deflection in the opposite direction of applied moment. This is a common assumption applied to both directions of a rectangular pile group in a pile supported footing.

A free head boundary condition is when the foundation element is in single curvature where translation and rotation is the dominant behavior. Stated in other terms, the shear causes deflection in the same direction as the applied moment. Most large diameter shaft designs will have a single curvature below ground line and require a free head assumption. The classic example of single curvature is a single column on a single shaft. In the transverse direction, this will act like a flagpole in the wind, or free head. What is not so obvious is the same shaft will also have single curvature in the longitudinal direction (below the ground line), even though the column exhibits some double curvature behavior. Likewise, in the transverse direction of multi-column piers, the columns will have double curvature (frame action). The shafts will generally have single curvature below grade and the free head boundary condition applies. The boundary condition for large shafts with springs placed at the ground line will be free head in most cases.

The key to determine the correct boundary condition is to resolve the correct sign of the moment and shear at the top of the shaft (or point of interest for the spring location). Since multi-mode results are always positive (CQC), this can be worked out by observing the seismic moment and shear diagrams for the structure. If the sign convention is still unclear, apply a unit load in a separate static FEM run to establish sign convention at the point of interest.

The correct boundary condition is critical to the seismic response analysis. For any type of soil and a given foundation loading, a fixed boundary condition will generally provide soil springs four to five times stiffer than a free head boundary condition.

7.2.5.F Spring Calculation (Method II)

The first step to calculate a foundation spring is to determine the shear and moment in the structural member where the spring is to be applied in the FEM. Foundation spring coefficients should be based on the maximum shear and moment from the applied longitudinal or transverse seismic loading. The combined load case (1.0*L* and 0.3*T*) shall be assumed for the design of structural members, and NOT applied to determine foundation response. For the simple case of a bridge with no skew, the longitudinal shear and moment are the result of the seismic longitudinal load, and the transverse components are ignored. This is somewhat unclear for highly skewed piers or curved structures with rotated springs, but the principle remains the same.

7.2.5.G Matrix Coordinate Systems (Method II)

The Global coordinate systems used to demonstrate matrix theory are usually similar to the system defined for substructure loads in Section 7.1.3, and is shown in Figure 7.2.5-2. This is also the default Global coordinate system of GT STRUDL. This coordinate system applies to this Section to establish the sign convention for matrix terms. Note vertical axial load is labeled as *P*, and horizontal shear load is labeled as *V*.

Also note the default Global coordinate system in CSI BRIDGE uses *Z* as the vertical axis (gravity axis). When imputing spring values in CSI BRIDGE the coefficients in the stiffness matrix will need to be adjusted accordingly. CSI BRIDGE allows you to assign spring stiffness values to support joints. By default, only the diagonal terms of the stiffness matrix can be assigned, but when selecting the advanced option, terms to a symmetrical {6x6} matrix can be assigned.

Figure 7.2.5-2 Global Coordinate System

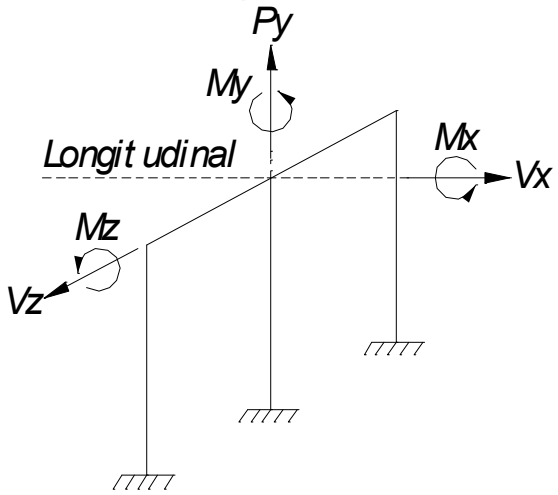

7.2.5.H Matrix Coefficient Definitions (Method II)

The stiffness matrix containing the spring values and using the standard coordinate system is shown in Figure 7.2.5-3. (Note that cross-couple terms generated using Technique I are omitted). For a description of the matrix generated using Technique I see Appendix 7-B1. The coefficients in the stiffness matrix are generally referred to using several different terms. Coefficients, spring or spring value are equivalent terms. Lateral springs are springs that resist lateral forces. Vertical springs resist vertical forces.

Figure 7.2.5-3 Standard Global Matrix

$$\begin{Bmatrix} & Vx & Py & Vz & Mx & My & Mz \\ Vx & K11 & 0 & 0 & 0 & 0 & 0 \\ Py & 0 & K22 & 0 & 0 & 0 & 0 \\ Vz & 0 & 0 & K33 & 0 & 0 & 0 \\ Mx & 0 & 0 & 0 & K44 & 0 & 0 \\ My & 0 & 0 & 0 & 0 & K55 & 0 \\ Mz & 0 & 0 & 0 & 0 & 0 & K66 \end{Bmatrix} \times \begin{Bmatrix} Disp. \\ \Delta x \\ \Delta y \\ \Delta z \\ \theta x \\ \theta y \\ \theta z \end{Bmatrix} = \begin{Bmatrix} Force \\ Vx \\ Py \\ Vz \\ Mx \\ My \\ Mz \end{Bmatrix}$$

Where the linear spring constants or K values are defined as follows, using the Global Coordinates:

K11 = Longitudinal Lateral Stiffness (kip/in)
K22 = Vertical or Axial Stiffness (kip/in)
K33 = Transverse Lateral Stiffness (kip/in)
K44 = Transverse Bending or Moment Stiffness (kip-in/rad)
K55 = Torsional Stiffness (kip-in/rad)
K66 = Longitudinal Bending or Moment Stiffness (kip-in/rad)

The linear lateral spring constants along the diagonal represent a point on a non-linear soil/structure response curve. The springs are only accurate for the applied loading and less accurate for other loadings. This is considered acceptable for Strength and Extreme Event design. For calculation of spring constants for Technique I see Appendix 7-B1.

7.2.5.I Group Effects

When a foundation analysis uses LPILE or an analysis using PY relationships, group effects will require the geotechnical properties to be reduced before the spring values are calculated. The Geotechnical Report will provide transverse and longitudinal multipliers that are applied to the PY curves. This will reduce the pile resistance in a linear fashion. The reduction factors for lateral resistance due to the interaction of deep foundation members is provided in the *Geotechnical Design Manual* Section 8.12.2.3.

7.2.5.J Shaft Caps and Pile Footings

Where pile supported footings or shaft caps are entirely below grade, their passive resistance should be utilized. In areas prone to scour or lateral spreading, their passive resistance should be neglected.

7.2.6 Lateral Analysis of Piles and Shafts

7.2.6.A Determination of Tip Elevations

Lateral analysis of piles and shafts involves determination of a shaft or pile tip location sufficient to resist lateral loads in both orthogonal directions. In many cases, the shaft or pile tip depth required to resist lateral loads may be deeper than that required for bearing or uplift. However, a good starting point for a tip elevation is the depth required for bearing or uplift. Another good "rule-of-thumb" starting point for shaft tips is an embedment depth of 6 diameters (6*D*) to 8 diameters (8*D*). Refer also to the Geotechnical Report minimum tip elevations provided by the geotechnical engineer.

A parametric study or analysis should be performed to evaluate the sensitivity of the depth of the shaft or pile to the displacement of the structure (i.e. the displacement of the shaft or pile head) in order to determine the depth required for stable, proportionate lateral response of the structure. Determination of shaft or pile tip location requires engineering judgment, and consideration should be given to the type of soil, the confidence in the soil data (proximity of soil borings) and the potential variability in the soil profile. Arbitrarily deepening shaft or pile tips may be conservative but can also have significant impact on constructability and cost.

The following is a suggested approach for determining appropriate shaft or pile tip elevations that are located in soils. Other considerations will need to be considered when shaft or pile tips are located in rock, such as the strength of the rock. This approach is based on the displacement demand seismic design procedures specified in the LRFD-SGS.

1. Size columns and determine column reinforcement requirements for Strength and Service load cases.
2. Determine the column plastic over-strength moment and shear at the base of the column using the axial dead load and expected column material properties. A program such as XTRACT or CSI BRIDGE may be used to help compute these capacities. The plastic moments and shears are good initial loads to apply to a soil response program. In some cases, Strength or other Extreme event loads may be a more appropriate load to apply in the lateral analysis. For example, in eastern Washington seismic demands are relatively low and elastic seismic or Strength demands may control.

3. Perform lateral analysis using the appropriate soil data from the Geotechnical Report for the given shaft or pile location. If final soil data is not yet available, consult with the geotechnical engineer for preliminary values to use for the site.

   Note: Early in the lateral analysis it is wise to obtain moment and shear demands in the shaft or pile and check that reasonable reinforcing ratios can be used to resist the demands. If not, consider resizing the foundation elements and restart the lateral analysis.

4. Develop a plot of embedment depth of shaft or pile versus lateral deflection of the top of shaft or pile. The minimum depth, or starting point, shall be the depth required for bearing or uplift or as specified by the Geotechnical Report. An example plot of an 8′ diameter shaft is shown in Figure 7.2.6-1 and illustrates the sensitivity of the lateral deflections versus embedment depth. Notice that at tip depths of approximately 50′ (roughly *6D*) the shaft head deflections begin to increase substantially with small reductions in embedment depth. The plot also clearly illustrates that tip embedment below 70′ has no impact on the shaft head lateral deflection.

5. From the plot of embedment depth versus lateral deflection, choose the appropriate tip elevation. In the example plot in Figure 7.2.6-1, the engineer should consider a tip elevation to the left of the dashed vertical line drawn in the Figure. The final tip elevation would depend on the confidence in the soil data and the tolerance of the structural design displacement. For example, if the site is prone to variability in soil layers, the engineer should consider deepening the tip; say 1 to 3 diameters, to ensure that embedment into the desired soil layer is achieved. The tip elevation would also depend on the acceptable lateral displacement of the structure. To assess the potential variability in the soil layers, the geotechnical engineer assigned to the project should be consulted.

Figure 7.2.6-1 Shaft Tip Elevation vs Shaft Head Deflection

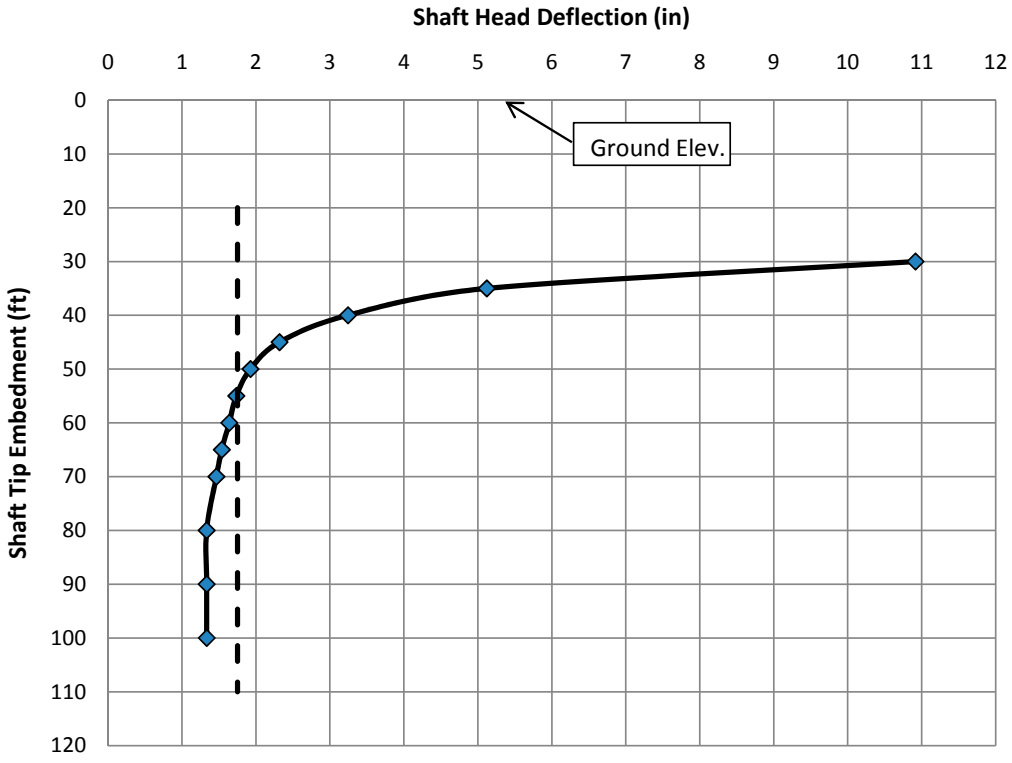

6. With the selected tip elevation, review the deflected shape of the shaft or pile, which can be plotted in LPILE. Examples are shown in Figure 7.2.6-2. Depending on the size and stiffness of the shaft or pile and the soil properties, a variety of deflected shapes are possible, ranging from a rigid body (fence post) type shape to a long slender deflected shape with 2 or more inflection points. Review the tip deflections to ensure they are reasonable, particularly with rigid body type deflected shapes. Any of the shapes in the Figure may be acceptable, but again it will depend on the lateral deflection the structure can tolerate.

Figure 7.2.6-2 Various Shaft Deflected Shapes

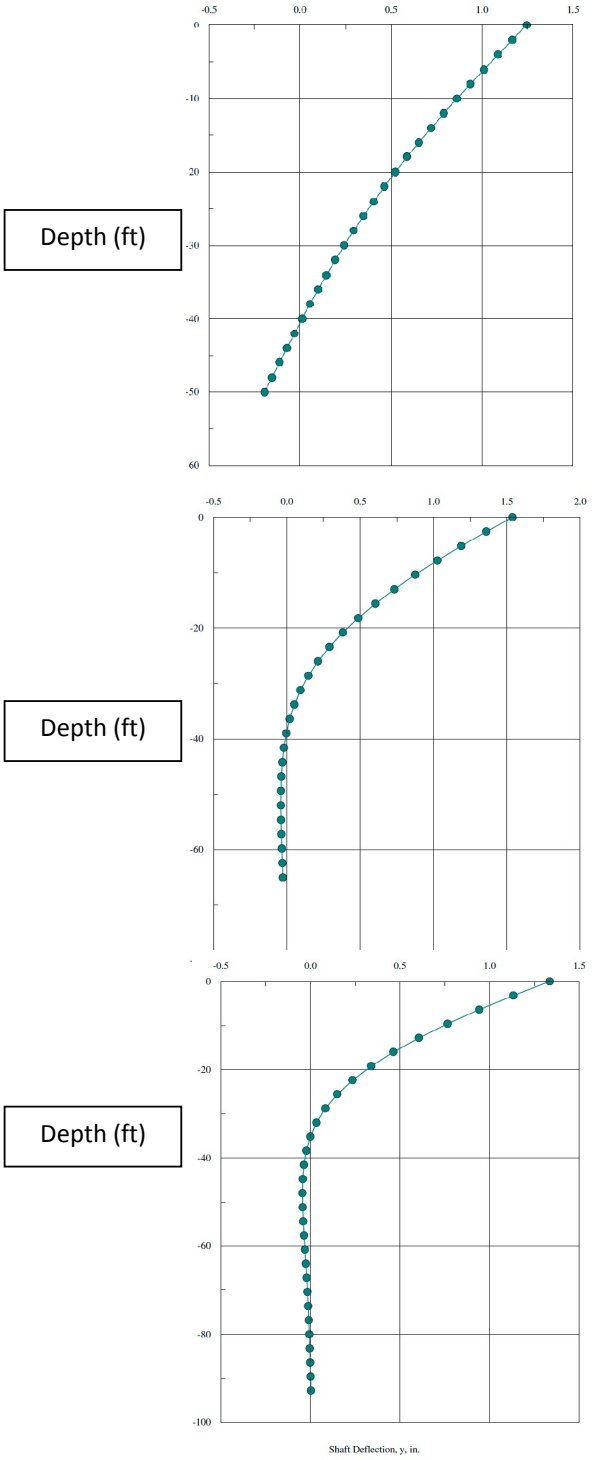

The engineer will also need to consider whether liquefiable soils are present and/or if the shaft or pile is within a zone where significant scour can occur. In this case the analysis needs to be bracketed to envelope various scenarios. It is likely that a liquefiable or scour condition case may control deflection. When scour is considered with the Extreme Event I limit state, the soil resistance of the upper 50 percent of the scour depth for the design flood scour shall be deducted from the lateral analysis of the pile or shaft. In all cases where scour conditions are anticipated at the bridge site or specific pier locations, the geotechnical engineer and the hydraulics engineer shall be consulted.

If liquefaction can occur, the bridge shall be analyzed using both the static and liquefied soil conditions. The analysis using the liquefied soils would typically yield the maximum bridge deflections and will likely control the required tip elevation, whereas the static soil conditions may control for strength design of the shaft or pile.

Lateral spreading is a special case of liquefied soils, in which lateral movement of the soil occurs adjacent to a shaft or pile located on or near a slope. Refer to the *Geotechnical Design Manual* M 46-03 for discussion on lateral spreading. Lateral loads will need to be applied to the shaft or pile to account for lateral movement of the soil. There is much debate as to the timing of the lateral movement of the soil and whether horizontal loads from lateral spread should be combined with maximum seismic inertia loads from the structure. Most coupled analyses are 2*D*, and do not take credit for lateral flow around shafts, which can be quite conservative. The LRFD-SGS permits these loads to be uncoupled; however, the geotechnical engineer shall be consulted for recommendations on the magnitude and combination of loads. See *Geotechnical Design Manual* Sections 6.4.2.7 and 6.5.4 for additional guidance on combining loads when lateral spreading can occur.

7.2.6.B Pile and Shaft Design for Lateral Loads

The previous section provides guidelines for establishing tip elevations for shafts and piles. Sensitivity analysis that incorporate both foundation and superstructure kinematics are often required to identify the soil conditions and loadings that will control the tip, especially if liquefied or scoured soil conditions are present. Several conditions will also need to be analyzed when designing the reinforcement for shafts and piles to ensure the controlling case is identified. All applicable strength, service and extreme load cases shall be applied to each condition. A list of these conditions includes, but is not limited to the following:

1. Static soil properties with both stiff and soft shaft or pile properties. Refer to Sections 7.2.3(B) and 7.2.3(C) for guidelines on computing stiff and soft shaft or pile properties.
2. Dynamic or degraded soil properties with both stiff and soft shaft or pile properties.
3. Liquefied soil properties with both stiff and soft shaft or pile properties.
    A. When lateral spreading is possible, an additional loading condition will need to be analyzed. The geotechnical engineer shall be consulted for guidance on the magnitude of seismic load to be applied in conjunction with lateral spreading loads. See *Geotechnical Design Manual* Sections 6.4.2.7 and 6.5.4 for additional guidance on combining loads when lateral spreading can occur.

4. Scour condition with stiff and soft shaft or pile properties. If scour is considered with the Extreme Event I limit state, the analysis should be conducted assuming that the soil in the upper 50 percent of the total scour for design flood has been removed to determine the available soil resistance for the analysis of the pile or shaft.

   Note: Often, the highest acceleration the bridge sees is in the first cycles of the earthquake, and degradation and/or liquefaction of the soil tends to occur toward the middle or end of the earthquake. Therefore, early in the earthquake, loads are high, soil-structure stiffness is high, and deflections are low. Later in the earthquake, the soil-structure stiffness is lower and deflections higher. This phenomenon is normally addressed by bracketing the analyses as discussed above.

   However, in some cases a site specific procedure may be required to develop a site specific design response spectrum. A site specific procedure may result in a reduced design response spectrum when compared to the general method specified in the LRFD-SGS 3.4. Section 3.4 requires the use of spectral response parameters determined using USGS/AASHTO Seismic Hazard Maps. The LRFD-SGS limits the reduced site specific response spectrum to two-thirds of what is produced using the general method. Refer to the Geotechnical Design Manual Chapter 6 for further discussion and consult the geotechnical engineer for guidance.

Refer to Section 7.8 Shafts and Chapter 4 for additional guidance/requirements on design and detailing of shafts and Section 7.9 Piles and Piling and Chapter 4 for additional guidance/requirements on design and detailing of piles.

7.2.7 Spread Footing Modeling

For a first trial footing configuration, Strength column moments or column plastic hinging moments may be applied to generate footing dimensions. Soil spring constants are developed using the footing plan area, thickness, embedment depth, Poisson's ratio v, and shear modulus G. The State Geotechnical Office will provide the appropriate Poisson's ratio and shear modulus. Spring constants for shallow rectangular footings are obtained using the following equations developed for rectangular footings. This method for calculating footing springs is referenced in ASCE 41-06, Section 4.4.2.1.2. (***Note:*** ASCE 41-06 was developed from FEMA 356.)

Figure 7.2.7-1 Spread Footing Orientation for Developing Spring Constants

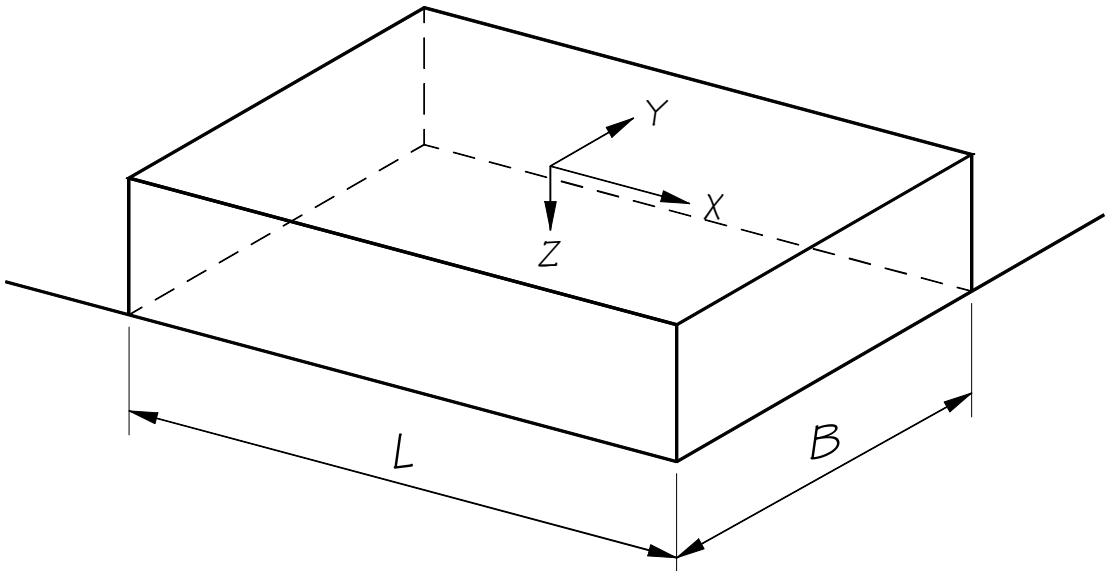

Orient axes such that $L > B$.
If $L = B$ use x-axis equations for both x-axis and y-axis.

Where:

K = βK_{sur}
K = Translation or rotational spring
K_{sur} = Stiffness of foundation at surface, see Table 7.2.7-1
β = Correction factor for embedment, see Table 7.2.7-2

Table 7.2.7-1 Stiffness of Foundation at Surface

Degree of Freedom	K_{sur}
Translation along x-axis	$\frac{GB}{2-v}\left[3.4\left(\frac{L}{B}\right)^{0.65}+1.2\right]$
Translation along y-axis	$\frac{GB}{2-v}\left[3.4\left(\frac{L}{B}\right)^{0.65}+0.4\frac{L}{B}+0.8\right]$
Translation along z-axis	$\frac{GB}{1-v}\left[1.55\left(\frac{L}{B}\right)^{0.75}+0.8\right]$
Rocking about x-axis	$\frac{GB^3}{1-v}\left[0.4\left(\frac{L}{B}\right)+0.1\right]$
Rocking about y-axis	$\frac{GB^3}{1-v}\left[0.47\left(\frac{L}{B}\right)^{2.4}+0.034\right]$
Torsion about z-axis	$GB^3\left[0.53\left(\frac{L}{B}\right)^{2.45}+0.51\right]$

Figure 7.2.7-2 Spread Footing Variables for Table 7.2.7-2

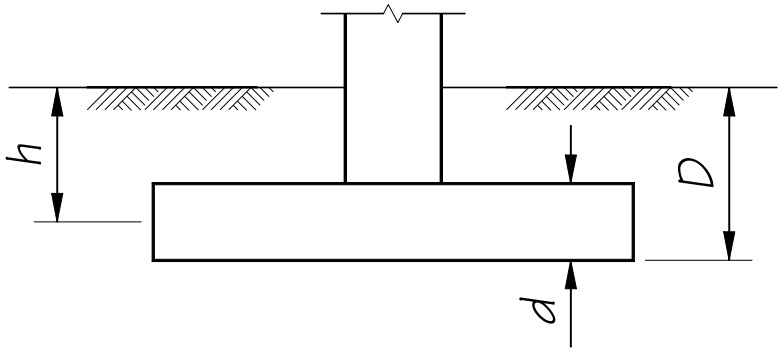

Where:

d = Height of effective sidewall contact (may be less than total foundation height if the foundation is exposed).

h = Depth to centroid of effective sidewall contact.

Table 7.2.7-2 Correction Factor for Embedment

Degree of Freedom	β
Translation along x-axis	$\left(1+0.21\sqrt{\frac{D}{B}}\right)\left[1+1.6\left(\frac{hd(B+L)}{BL^2}\right)^{0.4}\right]$
Translation along y-axis	$\left(1+0.21\sqrt{\frac{D}{L}}\right)\left[1+1.6\left(\frac{hd(B+L)}{LB^2}\right)^{0.4}\right]$
Translation along z-axis	$\left[1+\frac{1}{21}\frac{D}{B}\left(2+2.6\frac{B}{L}\right)\right]\cdot\left[1+0.32\left(\frac{d(B+L)}{BL}\right)^{\frac{2}{3}}\right]$
Rocking about x-axis	$1+2.5\frac{d}{B}\left[1+\frac{2d}{B}\left(\frac{d}{D}\right)^{-0.2}\sqrt{\frac{B}{L}}\right]$
Rocking about y-axis	$1+1.4\left(\frac{d}{L}\right)^{0.6}\left[1.5+3.7\left(\frac{d}{L}\right)^{1.9}\left(\frac{d}{D}\right)^{-0.6}\right]$
Torsion about z-axis	$1+2.6\left(1+\frac{B}{L}\right)\left(\frac{d}{B}\right)^{0.9}$

7.3 Column Design

7.3.1 General Design Considerations

The preliminary plan stage determines the initial column size, column spacing, and bridge span length based on a preliminary analysis. Columns are spaced to give maximum structural benefit except where aesthetic considerations dictate otherwise. Piers normally are spaced to meet the geometric and aesthetic requirements of the site and to give maximum economy for the total structure. Good preliminary engineering judgment results in maximum economy for the total structure.

The designer may make changes after the preliminary plan stage. The Design Unit Manager will need to review all changes, and if the changes are more than minor dimension adjustments, the Bridge Project Support Engineer and the State Bridge and Structures Architect will also need to be involved in the review.

Tall piers spaced farther apart aesthetically justify longer spans. Difficult and expensive foundation conditions will also justify longer spans. Span lengths may change in the design stage if substantial structural improvement and/or cost savings can be realized. The designer should discuss the possibilities of span lengths or skew with the Design Unit Manager as soon as possible. Changes in pier spacing at this stage can have significant negative impacts to the geotechnical investigation.

Column spacing should minimize column dead load moments. Multiple columns are better suited for handling lateral loads due to wind and/or earthquake. The designer may alter column size or spacing for structural reasons or change from a single-column pier to a multicolumn pier. Columns should be designed so that construction is as simple and repetitive as possible. The diameter of circular columns should be a multiple of one foot; however increments of 6 inches may be appropriate in some cases. Rectangular sections shall have lengths and widths that are multiples of 3 inches. Long rectangular columns are often tapered to reduce the amount of column reinforcement required for strength. Tapers should be linear for ease of construction.

For long columns, it may be advantageous to reduce the amount of reinforcement as the applied loads decrease along the column. In these cases, load combinations need to be generated at the locations where the reinforcement is reduced.

Bridge plans shall show column construction joints at the top of footing or pedestal and at the bottom of crossbeam. Optional construction joints with roughened surfaces should be provided at approximately 30-foot vertical spacing.

7.3.2 Slenderness Effects

This section supplements and clarifies LRFD-BDS. The goal of a slenderness analysis is to estimate the additional bending moments in the columns that are developed due to axial loads acting upon a deflected structure. Two primary analysis methods exist: the moment magnifier method and the second-order analysis. The designer must decide which method to use based upon the slenderness ratio (kL_u/r) of the column(s). Figure 7.3.2-1 below illustrates the basic steps in the column design process for evaluating the effects of slenderness on columns and methods for computing magnification of moments on columns.

Figure 7.3.2-1 Column Design Flowchart for Non-Seismic Design

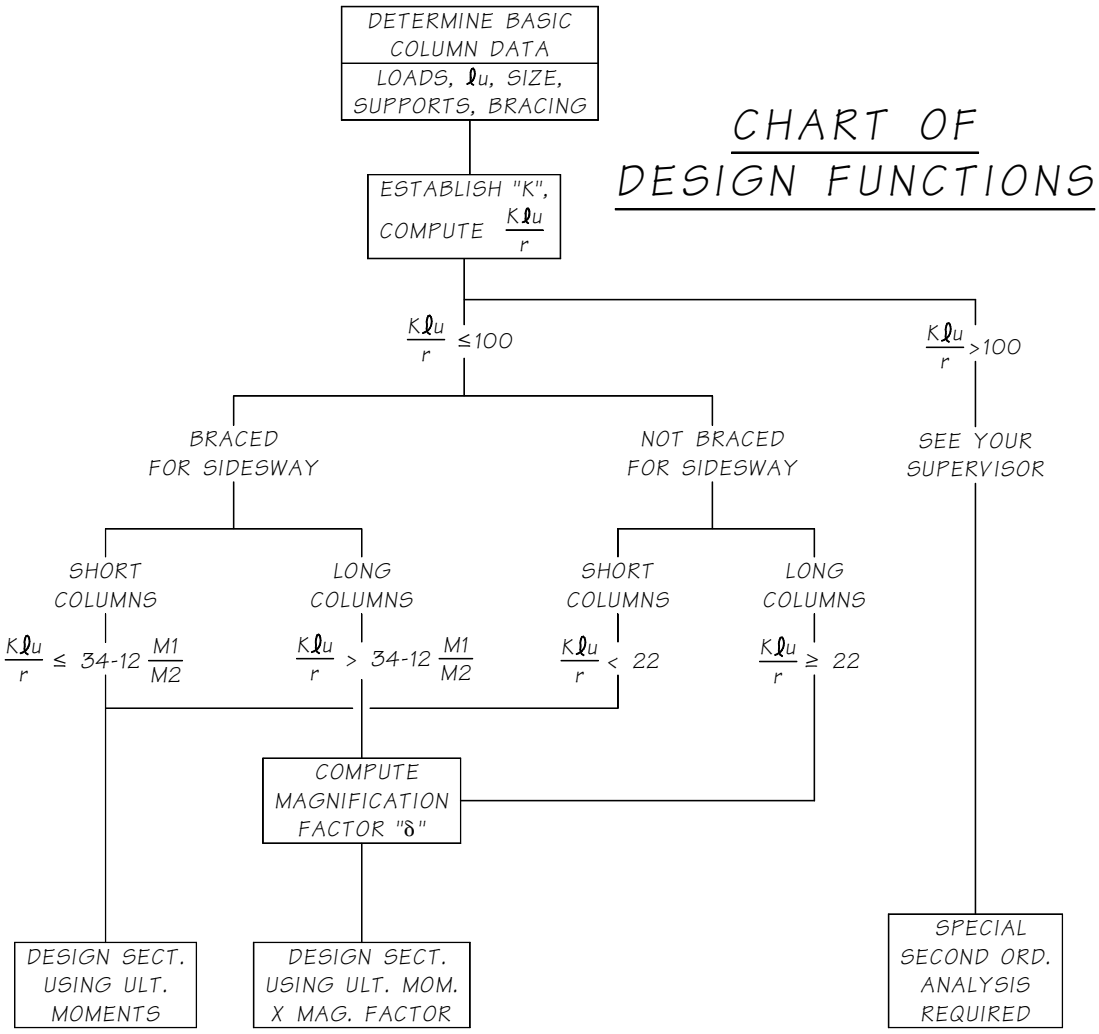

7.3.2.A Moment Magnification Method

The moment magnification method is described in LRFD-BDS Section 4.5.3.2.2. In general, if magnification factors computed using the LRFD-BDS are found to exceed about 1.4, then a second-order analysis may yield substantial benefits.

In a member with loads applied at the joints, any significant lateral deflection indicated the member is unbraced. The usual practice is to consider the pier columns as unbraced in the transverse direction. The superstructure engages girder stops at the abutment and resists lateral sidesway due to axial loads. However, pier lateral deflections are significant and are considered unbraced. Short spanned bridges may be an exception. Most bridge designs provide longitudinal expansion bearings at the end piers. Intermediate columns are considered unbraced because they must resist the longitudinal loading. The only time a column is braced in the longitudinal direction is when a framed bracing member does not let the column displace more than $L/1500$. L is the total column length. In this case, the bracing member must be designed to take all of the horizontal forces.

7.3.2.B Second-Order Analysis

A second-order analysis that includes the influence of loads acting on the deflected structure is required under certain circumstances, and may be advisable in others. It can lead to substantial economy in the final design of many structures. Computations of effective length factors, *k*, and buckling loads, *Pc*, are not required for a second-order analysis, though they may be helpful in establishing the need for such an analysis. The designer should discuss the situation with the Design Unit Manager before proceeding with the analysis. The ACI Building Code (ACI 318-08), should be consulted when carrying out a second-order analysis.

7.3.2.B.1 *Design Methods for a Second-Order Analysis*

For columns framed together, the entire frame should be analyzed as a unit. Analyzing individual columns result in overly conservative designs for some columns and non-conservative results for others. The preferred method for performing a second-order analysis of an entire frame or isolated single columns is to use a nonlinear finite element program with appropriate stiffness and restraint assumptions. The factored group loads are applied to the frame, including the self-weight of the columns. The model is then analyzed using the nonlinear option. The final design moments are obtained directly from the analysis.

PΔ moments are added to the applied moments using an iterative process until stability is reached. The deflections should converge within 5 percent of the total deflection. Analysis must include the effect of the column weight; therefore, the axial dead load must be adjusted as follows:

$$P_u = P_u + {}^1/_3\,(factored\ column\ weight) \qquad (7.3.2\text{-}1)$$

7.3.2.B.2 *Applying Factored Loads*

For a second-order analysis, loads are applied to the structure and the analysis results in member forces and deflections. It must be recognized that a second-order analysis is non-linear and the commonly assumed principle of superposition may not be applicable. The loads applied to the structure should be the entire set of factored loads for the load group under consideration. The analysis must be repeated for each group load of interest. The problem is complicated by the fact that it is often difficult to predict in advance which load groups will govern.

For certain loadings, column moments are sensitive to the stiffness assumptions used in the analysis. For example, loads developed as a result of thermal deformations within a structure may change significantly with changes in column, beam, and foundation stiffness. Accordingly, upper and lower bounds on the stiffness should be determined and the analysis repeated using both sets to verify the governing load has been identified.

7.3.2.B.3 *Member Properties*

As with a conventional linear elastic frame analysis, various assumptions and simplifications must be made concerning member stiffness, connectivity, and foundation restraint. Care must be taken to use conservative values for the slenderness analysis. Reinforcement, cracking, load duration, and their variation along the members are difficult to model while foundation restraint will be modeled using soil springs.

7.3.3 Shear Design

Shear design should follow the "Simplified Procedure for Nonprestressed Sections" in LRFD-BDS Section 5.7.3.4.1.

7.3.4 Column Silos

Column silos are an acceptable technique to satisfy the balanced stiffness and frame geometry requirements of Section 4.2.7 and the LRFD-SGS. Due to the construction and inspection complications of column silos, designers are encouraged to meet balanced stiffness and frame geometry requirements by the other methods suggested in Section 4.1.4 of the LRFD-SGS prior to use of column silos.

7.3.4.A General Design and Detailing Requirements

1. Column silo plans, specifications, and estimates shall be included in the Contract Documents.
2. Column silos shall be designed to resist lateral earth and hydrostatic pressure, including live load surcharge if applicable, for a 75-year minimum service life.
3. Column silos are not permitted for in-water locations such as in rivers and lakes.
4. Clearance between the column and the column silo shall be adequate for column lateral displacement demands, construction and post-earthquake inspection, but shall not be less than 1′-6″.
5. A 6″ minimum clearance shall be provided from the top of column silo to ground level.
6. Maximum depth of column silos shall not exceed 15 feet.
7. Column silos shall be watertight when located below the highest expected groundwater elevation. Silo covers need not be liquid tight.
8. Column silos shall be positively attached to the foundation element.

7.3.4.B Column Silos Formed From Extending Shaft Casing

Designers shall determine a minimum steel casing thickness sufficient to resist lateral loads and shall provide it in the Contract Documents. This thickness shall include a sacrificial steel area for corrosion resistance per Section 7.10.2H. The actual steel casing size and materials shall be determined by the Contractor as delineated in *Standard Specifications* Section 6-19 and 9-36. Appropriate detailing, as shown in Figure 7.3.4-1, shall be provided. The designer shall check that the minimum column-to-silo horizontal clearance is provided even if the permanent casing is constructed with a smaller diameter slip casing.

7.3.4.C Column Silos Formed by Other Methods

Column silos formed by other methods, such as corrugated metal pipes, may be considered if the general requirements above are satisfied.

7.3.4.D Column Silo Covers and Access Hatches

A column silo cover, including access hatches, shall be specified in the Contract Plans as shown in Appendix 7.3-A1-1. Column silo covers and access hatches shall be painted in accordance with *Standard Specifications* Section 6-07.3(9).

Column silo covers shall be protected from vehicular loading. Column silo covers shall be capable of sliding on top of the column silo and shall not restrain column lateral displacement demands. Obstructions to the column silo cover sliding such as barriers or inclined slopes are not allowed adjacent to the column silo where they may interfere with column lateral displacement demands. Column silo covers and tops of column silos shall be level.

Sufficient access hatches shall be provided in the column silo cover so that all surfaces of the column and the column silo can be inspected. A minimum of two hatches placed on opposite sides of the column shall be provided. Access hatches shall include a minimum clear opening of 1′-0″ × 1′-0″ to accommodate the lowering of pumping and inspection equipment into the column silo. Access hatches for direct personnel access shall have a minimum clear opening of 2′-0″ square. Column silo covers shall be designed to be removable by maintenance and inspection personnel. Public access into the column silo shall be prevented.

Figure 7.3.4-1 Column Silo on Shaft Foundation

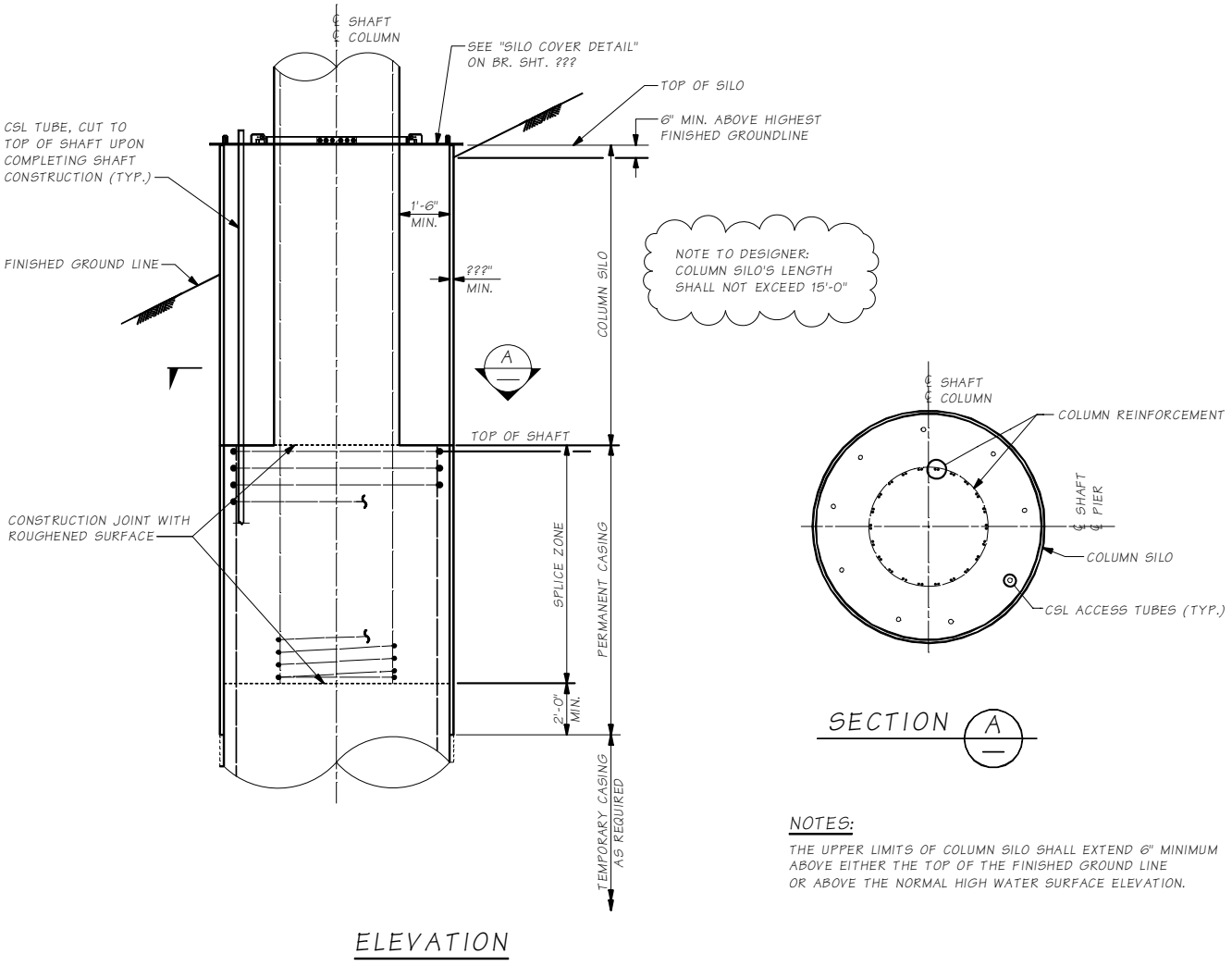

7.3.5 Column Reinforcement

7.3.5.A Reinforcing Bar Material

Steel reinforcing bars for all bridge substructure elements (precast and cast-in-place) shall be in accordance with Section 5.1.2.

7.3.5.B Longitudinal Reinforcement

The reinforcement ratio is the steel area divided by the gross area of the section (As/Ag). The maximum reinforcement ratio shall be 0.04 in SDCs A, B, C and D. The minimum reinforcement ratio shall be 0.007 for SDC A, B, and C and shall be 0.01 for SDC D.

For bridges in SDC A, if oversized columns are used for architectural reasons, the minimum reinforcement ratio of the gross section may be reduced to 0.005, provided all loads can be carried on a reduced section with similar shape and the reinforcement ratio of the reduced section is equal to or greater than 0.01 and $0.133f'c/fy$. The column dimensions are to be reduced by the same ratio to obtain the similar shape.

The reinforcement shall be evenly distributed and symmetric within the column.

7.3.5.C Longitudinal Splices

In general, no splices are allowed when the required length of longitudinal reinforcement is less than the conventional mill length (typically 60-feet). Splicing of longitudinal reinforcement shall be outside the plastic hinge regions. But in SDC A, splices need only be located a minimum of 1.5 times the column diameter from the top and bottom of the column. The bridge plans shall clearly identify the limits of the permissible splice zone. Figure 7.3.5-1 shows standard column reinforcement details.

For bridges in SDC's A and B, no lap splices shall be used for #14 or #18 bars. Either lap or mechanical splices may be used for #11 bars and smaller. Lap splices shall be detailed as Class B splices. The smaller bars in the splice determine the length of lap splice required. When space is limited, #11 bars and smaller can use welded splices, an approved mechanical butt splice, or the upper bars can be bent inward (deformed by double bending) to lie inside and parallel to the lower bars. The spacing of the transverse reinforcement over the length of a lap splice shall not exceed 4-inches or one-quarter of the minimum member dimension.

For bridge in SDC's C and D, bars shall be spliced using mechanical splices meeting the requirements of *Standard Specifications* Section 6-02.3(24)F. Splices shall be staggered. The distance between splices of adjacent bars shall be greater than the maximum of 20 bar diameters or 24-inches.

Figure 7.3.5-1 Column Splice and Plastic Hinge Region Details

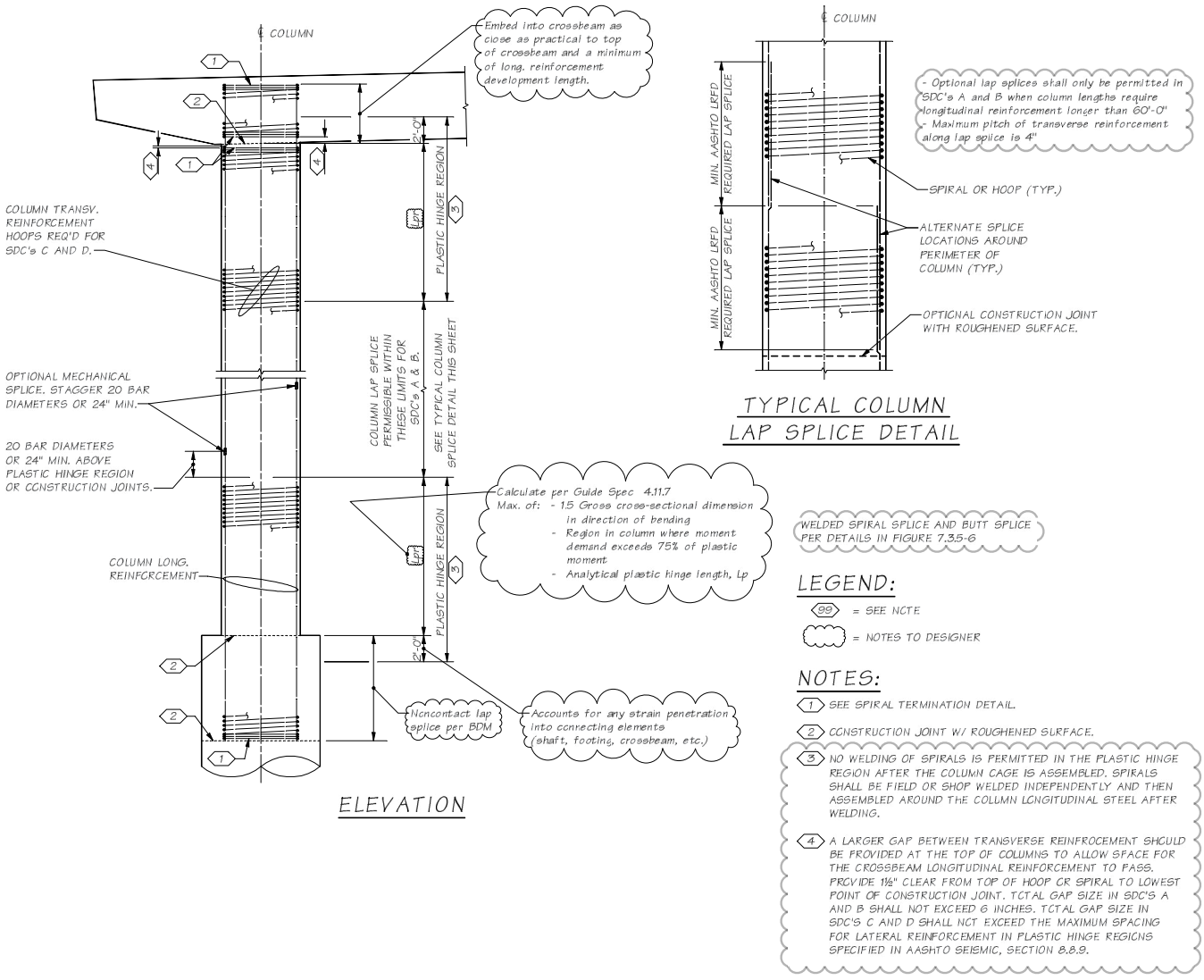

7.3.5.D Longitudinal Development

7.3.5.D.1 *Crossbeams*

Development of longitudinal reinforcement shall be in accordance with LEFD-SGS, Sections 8.8.4 and 8.8.8 and LRFD-BDS Section 5.10.8.2.1. Column longitudinal reinforcement shall be extended into crossbeams as close as practically possible to the opposite face of the crossbeam (below the bridge deck reinforcement).

For precast prestressed concrete girder bridges in SDC A and B with fixed diaphragms at intermediate piers, column longitudinal reinforcement may be terminated at top of lower crossbeam, provided that adequate transfer of column forces is provided.

For precast prestressed concrete girder bridges in SDC C and D with two-stage fixed diaphragms at intermediate piers, all column longitudinal reinforcement should extend to the top of the cast-in-place concrete diaphragm (upper crossbeam) above the lower crossbeam. Careful attention should be given that column reinforcement does not interfere with extended strands projecting from the end of the prestressed concrete girders. In case of interference, column longitudinal reinforcement obstructing the

extended strands may be terminated at top of the lower crossbeam, and shall be replaced with equivalent full-height stirrups extending from the lower to upper crossbeam within the effective width as shown in Figure 7.3.5-2. All stirrups within the effective zone, based on an approximate strut-and-tie model, may be used for this purpose. The effective zone shall be taken as column diameter plus depth of lower crossbeam provided that straight column bars are adequately developed into the lower crossbeam. The effective zone may be increased to the column diameter plus two times depth of lower crossbeam if headed bars are used for column longitudinal reinforcement.

If the depth of lower crossbeam is less than 1.25 times the tension development length required for column reinforcement, headed bars shall be used. Heads on column bars terminated in the lower crossbeam are preferable from a structural perspective. However, extra care in detailing during design and extra care in placement of the column reinforcement during construction is required. Typically the heads on the column bars will be placed below the lower crossbeam top mat of reinforcement. Headed reinforcement shall conform to the requirements of ASTM 970 Class HA.

Transverse column reinforcement only needs to extend to the top of the lower crossbeam just below the top longitudinal steel. However, when the joint shear principal tension is less than $0.11\sqrt{f'c}$, minimum cross tie reinforcement shall be placed acting across the upper cross beam in accordance with the LRFD-SGS, Sections 8.13.3. The minimum cross tie reinforcement shall provide at least as much confining pressure at yield as the column spiral can provide at yield. This pressure may be calculated assuming hydrostatic conditions. If the joint shear principal tension exceeds $0.11\sqrt{f'c}$, then additional joint reinforcement as outlined by LRFD-SGS, Sections 8.13.3 shall be provided. With the exception of J-bars, the additional reinforcement shall be placed in the upper and lower crossbeam. The cross tie reinforcement may be placed with a lap splice in the center of the joint.

Large columns or columns with high longitudinal reinforcement ratios may result in closely spaced stirrups with little clear space left for proper concrete consolidation outside the reinforcement. In such cases, either hanger reinforcement comprised of larger bars with headed anchors may be used in the effective zone shown in Figure 7.3.5-2 or supplemental stirrups may be placed beyond the effective zone. Hanger reinforcement in the effective zone is preferred.

The designer is encouraged to include interference detail/plan views of the crossbeam reinforcement in relation to the column steel in the contract drawings. Suggested plans include the views at the lower stage crossbeam top reinforcement and the upper crossbeam top reinforcement.

7.3.5.D.2 *Footings*

Longitudinal reinforcement at the bottom of a column should extend into the footing and rest on the bottom mat of footing reinforcement with standard 90° hooks. In addition, development of longitudinal reinforcement shall be in accordance with LRFD-SGS, Section 8.8.4 and LRFD-BDS Section 5.10.8.2.1. Headed bars may be used for longitudinal reinforcement at the bottom of columns. The head shall be placed at least 3-inches below the footing bottom mat reinforcement. This may require the footing to be locally thickened in the region of the column to provide cover for the bottom of the headed bars. The head of the rebar placed below the footing bottom reinforcement mat shall not contribute to the compressive capacity of the rebar.

Figure 7.3.5-2 Longitudinal Development Into Crossbeams

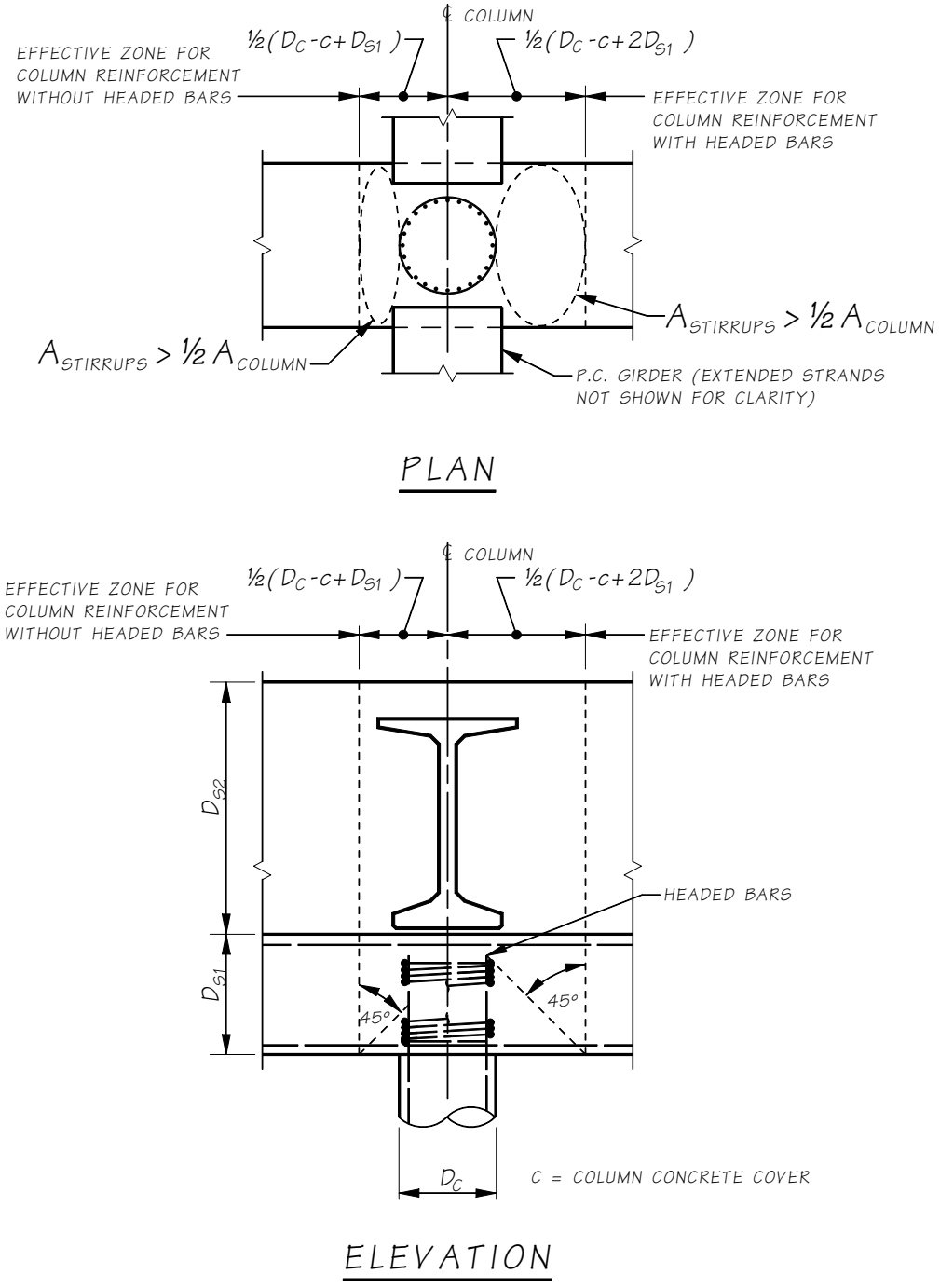

7.3.5.D.3 *Shafts*

Column longitudinal reinforcement in shafts is typically straight. Embedment shall be a minimum length equal to lns = ls + s (per TRAC Report WA- RD 417.1 titled *"Noncontact Lap Splices in Bridge Column-Shaft Connections"*).

Where:

l_s = the larger of 1.7 × l_{ac} or 1.7 × l_d

l_{ac} = development length from the LRFD-SGS 8.8.4 for the column longitudinal reinforcement.

l_d = tension development length from LRFD-BDS Section 5.10.8.2.1 for the column longitudinal reinforcement.

s = distance between the shaft and column longitudinal reinforcement

The requirements of the LRFD-SGS Section 8.8.10 for development length of column bars extended into oversized pile shafts for SDC C and D shall not be used.

The factor of 1.7 used in determining ls represents a Class C lap splice modification factor from previous versions of LRFD-BDS. Although the concept of a Class C splice is no longer applicable, the factor is still necessary to match the recommendations of TRAC Report WA-RD 417.1.

The modification factor in Section 5.10.8.2.1 that allows ld to be decreased by the ratio of (As required)/(As provided), shall not be used. Using this modification factor would imply that the reinforcement does not need to yield to carry the ultimate design load. This may be true in other areas. However, our shaft/column connections are designed to form a plastic hinge, and therefore the reinforcement shall have adequate development length to allow the bars to yield.

See Figure 7.3.5-3 for an example of longitudinal development into shafts.

Figure 7.3.5-3 Longitudinal Development Into Shafts

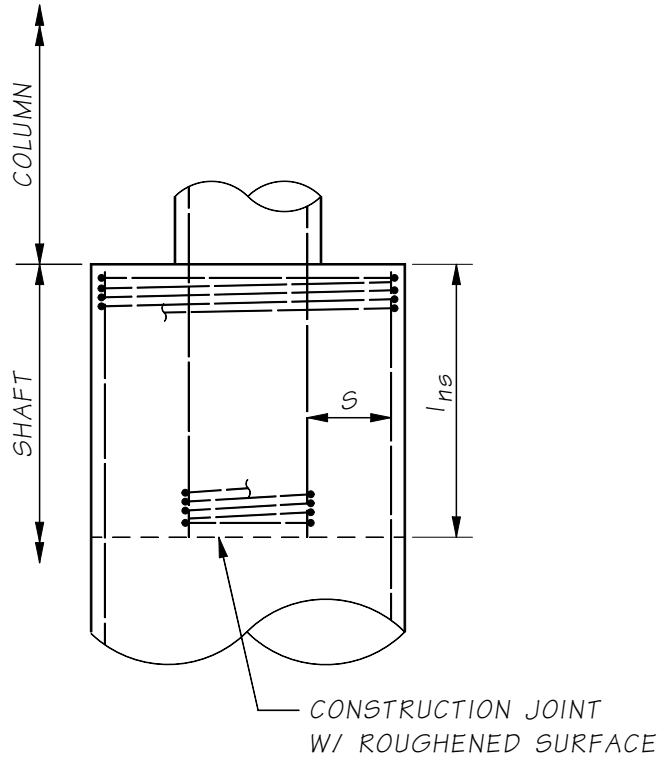

7.3.5.E Transverse Reinforcement

All transverse reinforcement in columns shall be deformed. Although allowed in the LRFD-BDS, plain bars or plain wire may not be used for transverse reinforcement.

Columns in SDC A may use spirals, circular hoops, or rectangular hoops and crossties. Spirals are the preferred confinement reinforcement and shall be used whenever a #6 spiral is sufficient to satisfy demands. When demands require reinforcement bars greater than #6, circular hoops of #7 through #9 may be used. Bundled spirals shall not be used for columns or shafts. Also, mixing of spirals and hoops within the same column is not permitted by the LRFD-SGS.

Specifications. Figure 7.3.5-4 and 7.3.5-5 show transverse reinforcement details for rectangular columns in high and low seismic zones, respectively.

Columns in SDCs C and D shall use hoop reinforcement. Hoop reinforcement shall be circular where possible, although rectangular hoops with ties may be used when large, odd shaped column sections are required. Where the column diameter is 3-feet or less, the WSDOT Steel Specialist shall be contacted regarding the constructability of smaller diameter welded hoops.

When rectangular hoops with ties are used, consideration shall be given to column constructability. Such considerations can include, but are not limited to a minimum of 2′-6″ by 3′-0″ open rectangle to allow access for the tremie tube and construction workers for concrete placement, in-form access hatches, and/or external vibrating.

A larger gap between transverse reinforcement should be provided at the top of columns to allow space for the crossbeam longitudinal reinforcement to pass. In SDC's C & D, the gap shall not exceed the maximum spacing for lateral reinforcement in plastic hinge regions specified in LRFD-SGS, Section 8.8.9. This can be of particular concern in bridge decks with large superelevation cross slopes.

Figure 7.3.5-4 Constant and Tapered Rectangular Column Section SDCs C and D

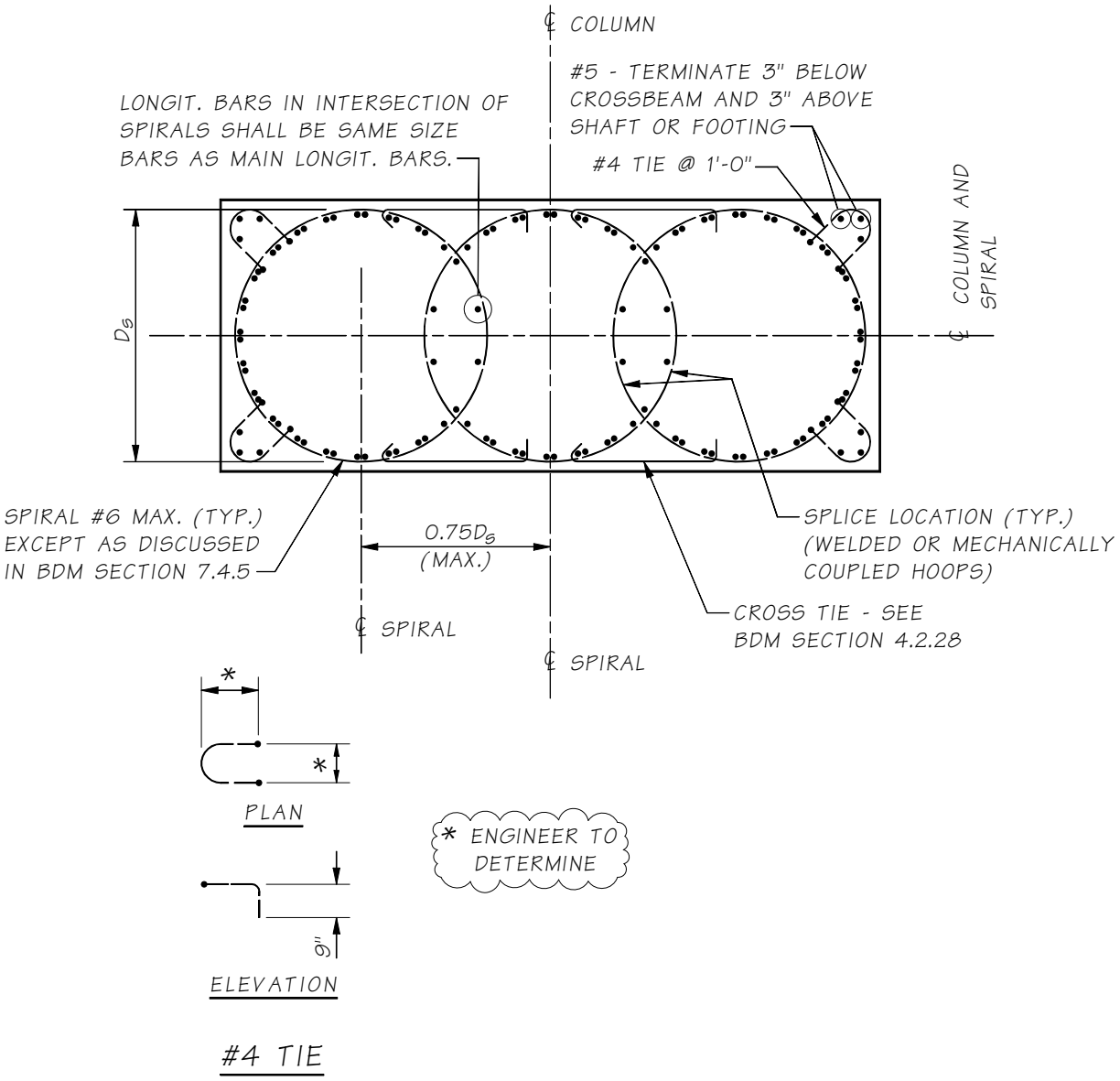

Figure 7.3.5-5 Constant and Tapered Rectangular Column Section SDCs A and B

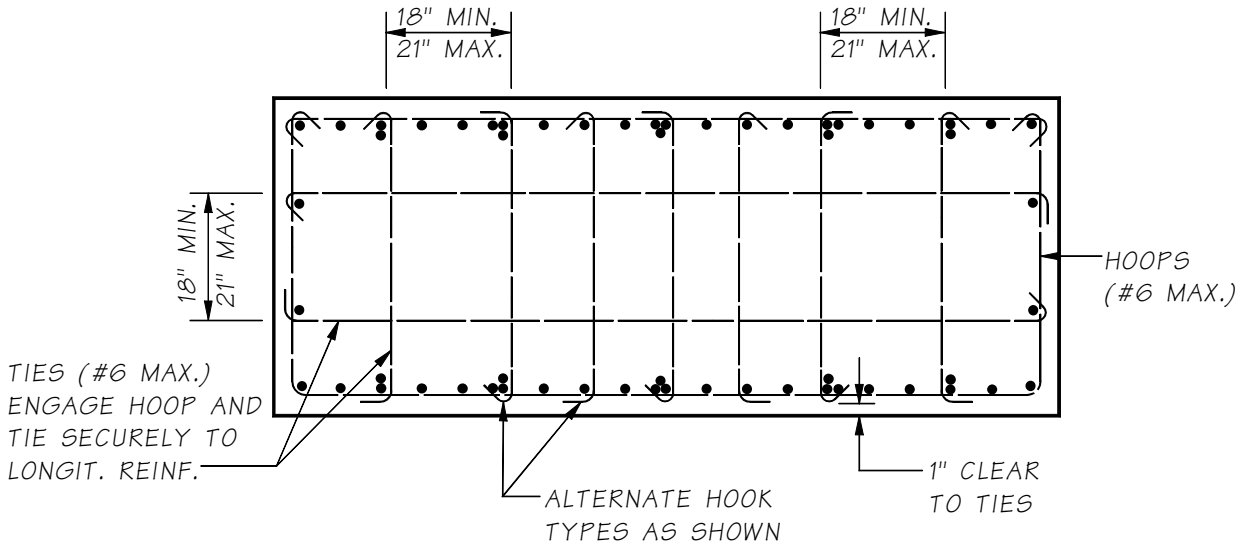

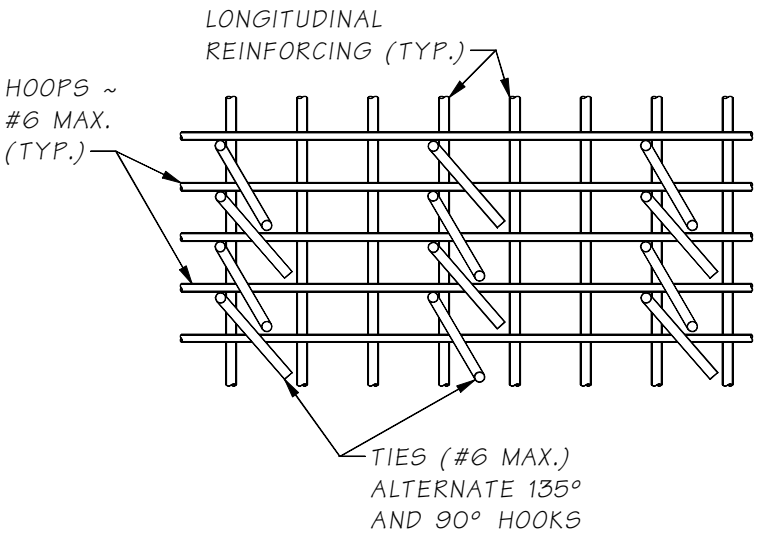

7.3.5.F Spiral Splices and Hoops

Welded laps shall be used for splicing and terminating spirals and shall conform to the details shown in Figure 7.3.5-6. Only single sided welds shall be used, which is the preferred method in construction. Spirals or butt- welded hoops are required for plastic hinge zones of columns. Lap spliced hoops are not permitted in columns in any region.

Although hooked lap splices are structurally acceptable, and permissible by LRFD-BDS for spirals or circular hoops, they shall not be allowed due to construction challenges. While placing concrete, tremies get caught in the protruding hooks, making accessibility to all areas and its withdrawal cumbersome. It is also extremely difficult to bend the hooks through the column cage into the core of the column.

When welded hoops are used, the plans shall show a staggered pattern around the perimeter of the column so that no two adjacent welded splices are located at the same location. Also, where interlocking hoops are used in rectangular or non- circular columns, the splices shall be located in the column interior.

Circular hoops for columns shall be shop fabricated using a manual direct butt weld or resistance butt weld. Currently, a Bridge Special Provision has been developed to cover the fabrication requirements of hoops for columns and shafts, which may eventually be included in the *Standard Specifications*. Manual direct butt welded hoops require radiographic nondestructive examination (RT), which may result in this option being cost prohibitive at large quantities.

Columns with circular hoop reinforcement shall have a minimum 2” concrete cover to the hoops to accommodate resistance butt weld “weld flash” that can extend up to ½” from the bar surface.

Field welded lap splices and termination welds of spirals of any size bar are not permitted in the plastic hinge region including a zone extending 2’-0” into the connected member and should be clearly designated on the contract plans. If spirals are welded while in place around longitudinal steel reinforcement, there is a chance that an arc can occur between the spiral and longitudinal bar. The arc can create a notch that can act as a stress riser and may cause premature failure of the longitudinal bar when stressed beyond yield. Because high strains in the longitudinal reinforcement can penetrate into the connected member, welding is restricted in the first 2’-0” of the connected member as well. It would acceptable to field weld lap splices of spirals off to the side of the column and then slide into place over the longitudinal reinforcement.

Figure 7.3.5-6 Welded Spiral Splice and Butt Splice Details

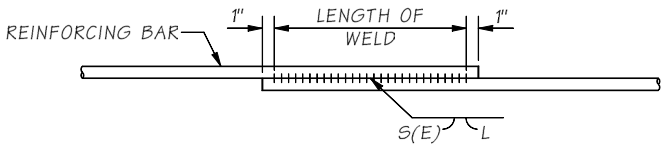

WELDED LAP SPLICE DETAIL

WELDED LAP SPLICE IS SUITABLE FOR SPIRALS IN COLUMNS AND SHAFTS UP TO BAR SIZE #6. LAP SPLICE FOR BAR SIZES #7 TO #9 ARE ONLY INTENDED FOR SHAFT HOOPS. WELDING SHALL MEET THE REQUIREMENTS OF STD. SPEC. 6-02.3(24)E. FOR WELD DIMENSIONS, SEE TABLE BELOW.

		WELD DIMENSIONS (IN)		
	BAR SIZE	S	E	L (LENGTH)
SPIRALS	#4	¼	⅛	4
	#5	5/16	3/16	6
	#6	⅜	3/16	6
HOOPS FOR SHAFTS	#7	7/16	¼	7
	#8	½	¼	8
	#9	9/16	5/16	8

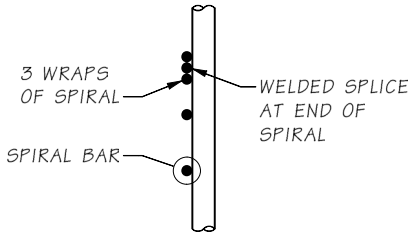

SPIRAL TERMINATION DETAIL

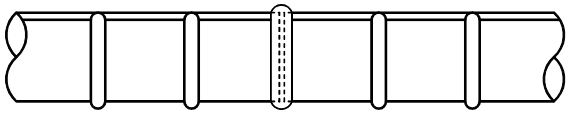

RESISTANCE BUTT JOINT DETAIL

SEE STD. SPEC. 6-02.3(24)I FOR RESISTANCE BUTT WELD SPLICING REQUIREMENTS

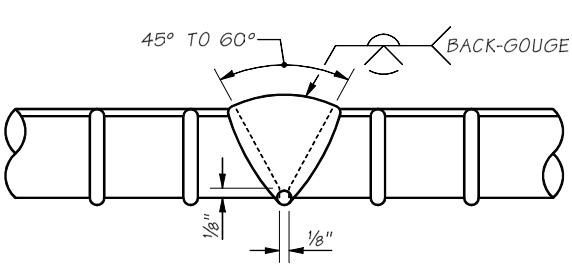

SINGLE V-GROOVE WELD
AWS D1.4 FIGURE 5.2(A)

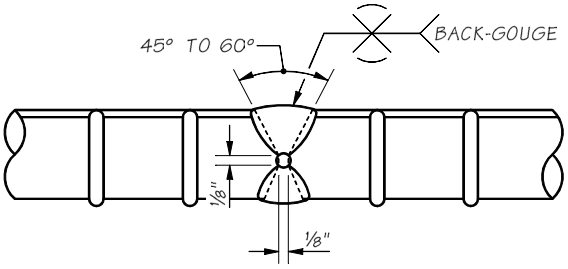

DOUBLE V-GROOVE WELD
AWS D1.4 FIGURE 5.2(B)

MANUAL DIRECT BUTT JOINT DETAILS

ALL BACKING SHALL BE REMOVED.
SEE STD. SPEC. 6-02.3(24)J FOR WELDING REQUIREMENTS AND RT TESTING

NOTES:

HOOPS SHALL BE SPLICED WITH EITHER A RESISTANCE BUTT WELD OR A DIRECT BUTT WELD. STAGGER HOOP SPLICES AROUND THE COLUMN PERIMETER SO THAT SPLICES ON ADJACENT HOOPS ARE A MINIMUM OF 2'-0" APART.

7.3.6 Column and Wall Pier Hinges

Column and wall pier hinges of the type shown in Figure 7.3.6-1 were built on past WSDOT bridges. These types of hinges shall be used only when widening an existing bridge crossbeam or wall pier with similar type of detail. Reduced column fixity described in BDM Section 7.3.7 could be used for all column hinge applications.

$$A_s = \frac{\frac{P_u}{2} + \sqrt{\left(\frac{P_u}{2}\right)^2 + V_u{}^2}}{0.85 * F_y * cos\theta} \qquad (7.3.6\text{-}1)$$

Where:

P_u is the factored axial load
V_u is the factored shear load
F_y is the reinforcing yield strength (60 ksi)
θ is the angle of the hinge bar to the vertical

The development length required for the hinge bars is 1.25 ld. All applicable modification factors for development length in LRFD-BDS Section 5.10.8.2 may be used when calculating ld. Tie and spiral spacing shall conform to LRFD-BDS confinement and shear requirements. Ties and spirals shall not be spaced more than 12″ (6″ if longitudinal bars are bundled). Premolded joint filler should be used to assure the required rotational capacity. There should also be a shear key at the hinge bar location.

When the hinge reinforcement is bent, additional confinement reinforcing may be necessary to take the horizontal component from the bent hinge bars. The maximum spacing of confinement reinforcing for the hinge is the smaller of that required above and the following:

$$S_{max} = \frac{A_v F_y}{\left[\frac{P_u \tan\theta}{.85 l_h} + \frac{V_s}{d}\right]} \qquad (7.3.6\text{-}2)$$

Where:

Av, Vs, and d are as defined in AASHTO Article “Notations” l_h is the distance from the hinge to where the bend begins

Continue this spacing one-quarter of the column width (in the plane perpendicular to the hinge) past the bend in the hinge bars.

Figure 7.3.6-1 Hinge Details

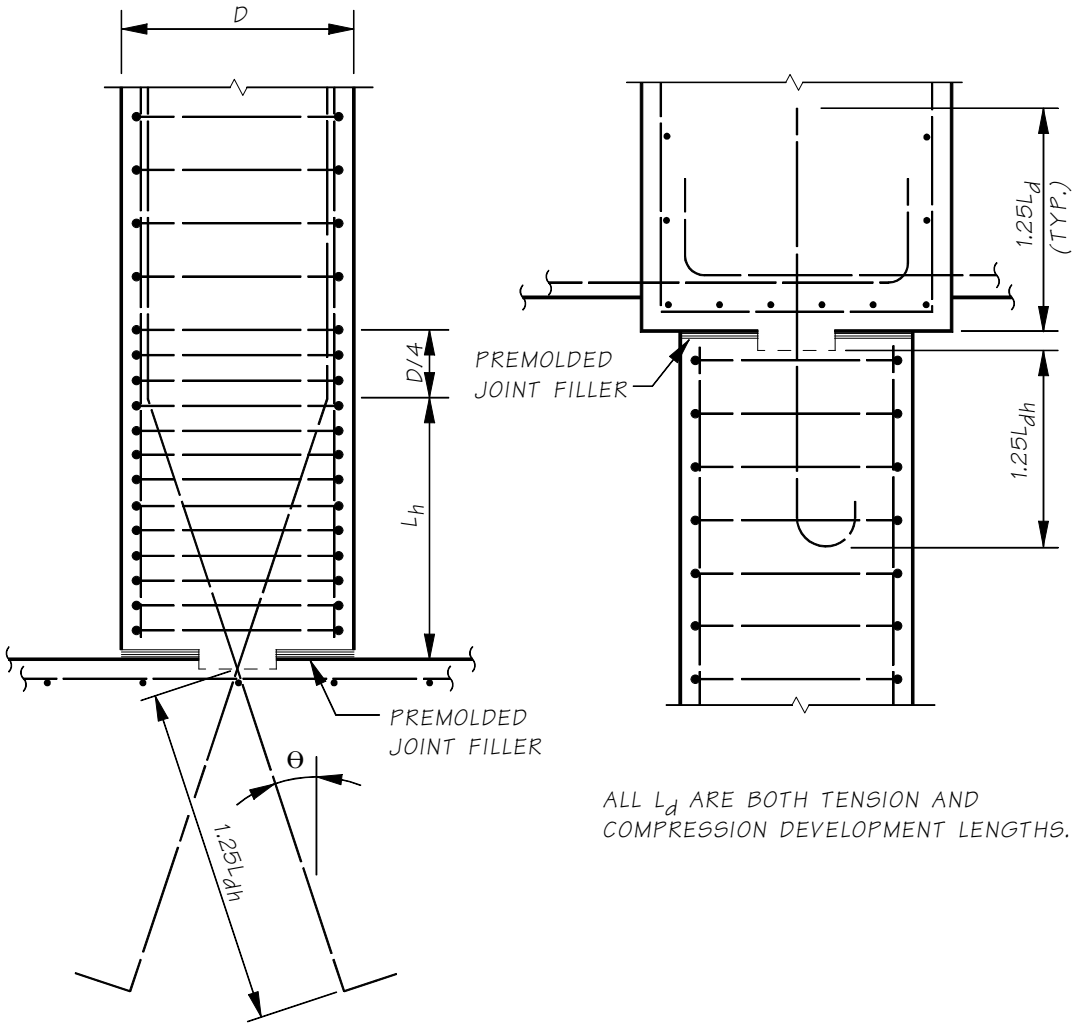

7.3.7 Reduced Column Section

Reduced column sections decrease overstrength plastic demands into the foundation. Traditional column designs are preferred over this detail, but this may be used if it is determined that traditional details will not satisfy the design code requirements due to architectural, balanced stiffness, or other project specific requirements. The reduction at the base of the column shall be designed as described below and detailed as shown in Figure 7.3.7-1. The concept is shown in Figure 7.3.7-1 for a spread footing foundation, but could be used for shaft and pile supported foundations also. Similar checks are required if the reduced section is placed at the crossbeam, along with any additional checks required for those sections. One such additional check is joint shear in the crossbeam based on the overstrength plastic capacity of the reduced column section.

The design and detail at the top of columns, for architectural flares, is similar.

7.3.7.A Inner Concrete Column

7.3.7.A.1 *Longitudinal Reinforcement*

1. The longitudinal inner column reinforcement shall extend a distance of L_{ns} into the column and shall be set on top of bottom mat reinforcement of foundation with standard 90° hooks.

$$L_{ns} = L_s + sc + L_p \quad (7.3.7\text{-}1)$$

Where:

L_s = The larger of 1.7×Lac or 1.7×Ld (for Class C lap splice)
L_{ac} = Development length of bar from the LRFD-SGS Section 8.8.4
L_d = Tension development length from LRFD-BDS Section 5.11.2.1
(Note: All applicable modification factors for Ld may be used except for the reduction specified in Section 5.11.2.2.2 for As required/As provided)
sc = Distance from longitudinal reinforcement of outer column to inner column.
L_p = Analytical Plastic Hinge Length defined in the LRFD-SGS Section 4.11.6-3.

2. The longitudinal reinforcing in the inner column shall meet all the design checks in the LRFD-SGS and LRFD-BDS. Some specific checks of the inner column (inner core) will be addressed as follows:

   A. A shear friction check shall be met using the larger of the overstrength plastic shear (Vpo) or the ultimate shear demand from strength load cases at the hinge location. The area of longitudinal inner column reinforcement, Ast, in excess of that required in the tensile zone for flexural resistance (usually taken as ½ the total longitudinal bars) may be used for the required shear friction reinforcement, Avf.

   B. The flexural capacity of the inner column shall be designed to resist the strength load cases and meet cracking criteria of the service load cases. Special consideration shall be given to construction staging load cases where the column stability depends on completion of portions of the superstructure.

   C. The axial resistance of the inner column shall meet the demands of strength load cases assuming the outer concrete has cracked and spalled off. The gross area, A_g, shall be the area contained inside the spiral reinforcement.

   D. The inner core shall be designed and detailed to meet all applicable requirements of LRFD-SGS Section 8.

7.3.7.A.2 *Transverse Reinforcement*

1. The portion of the transverse reinforcement for the inner core, inside the larger column dimension (above the foundation), shall meet all the requirements of the LRFD-SGS and LRFD-BDS. The demand shall be based on the larger of the overstrength plastic shear demand (V_{po}) of the inner column or the ultimate shear demand from strength load cases at the hinge location. The transverse reinforcement shall be extended to the top of the longitudinal reinforcement for the inner column (L_{ns}).
2. The portion of transverse reinforcement for the inner core, in the foundation, shall meet the minimum requirements of the LRFD-SGS, Section 8.8.8, for compression members, based on the dimensions of the inner column. This reinforcement shall be extended to the bend radius of the of the longitudinal inner column reinforcement for footings or as required for column-shaft connections.
3. A gap in the inner column transverse reinforcement shall be sized to allow the foundation top mat reinforcement and foundation concrete to be placed prior to setting the upper portion of the transverse inner column reinforcement. This gap shall be limited to 5″; a larger gap will require the State Bridge Design Engineer's approval. The spiral reinforcement above the footing shall be placed within 1″ of the top of footing to reduce the required gap size. The WSDOT Spiral termination details will be required at each end of this gap, the top of the upper transverse reinforcement, but not the bottom of the lower transverse reinforcement with spread footings.

7.3.7.A.3 *Analytical Plastic Hinge Region*

1. The analytical plastic hinge length of the reduced column section shall be based on horizontally isolated flared reinforced concrete columns, using Equation 4.11.6-3 of the LRFD-SGS.
2. The end of the column which does not have a reduced column section shall be based on Equation 4.11.6-1 of the LRFD-SGS.

7.3.7.B Outer Concrete Column

1. The WSDOT Bridge and Structures Office normal practices and procedures shall be met for the column design, with the following exceptions:
   A. The end with the reduced column shall be detailed to meet the seismic requirements of a plastic hinge region. This will ensure that if a plastic hinge mechanism is transferred into the large column shape, it will be detailed to develop such hinge. The plastic shear this section shall be required to resist shall be the same as that of the inner column section.
   B. The WSDOT spiral termination detail shall be placed in the large column at the reduced section end, in addition to other required locations.
   C. In addition to the plastic hinge region requirements at the reduced column end, the outer column spiral reinforcement shall meet the requirements of the WSDOT *Noncontact Lap Splices in Bridge Column-Shaft Connections*. The k factor shall be taken as 0.5 if the column axial load, after moment distribution, is greater than 0.10f′cAg and taken as 1.0 if the column axial load is in tension. Ag shall be taken as the larger column section. Linear interpolation may be used between these two values.

2. The column end without the reduced column section shall be designed with WSDOT practices for a traditional column, but shall account for the reduced overstrength plastic shear, applied over the length of the column, from the overstrength plastic capacities at each column end.

Figure 7.3.7-1 Reduced Column Section at Bottom of Column

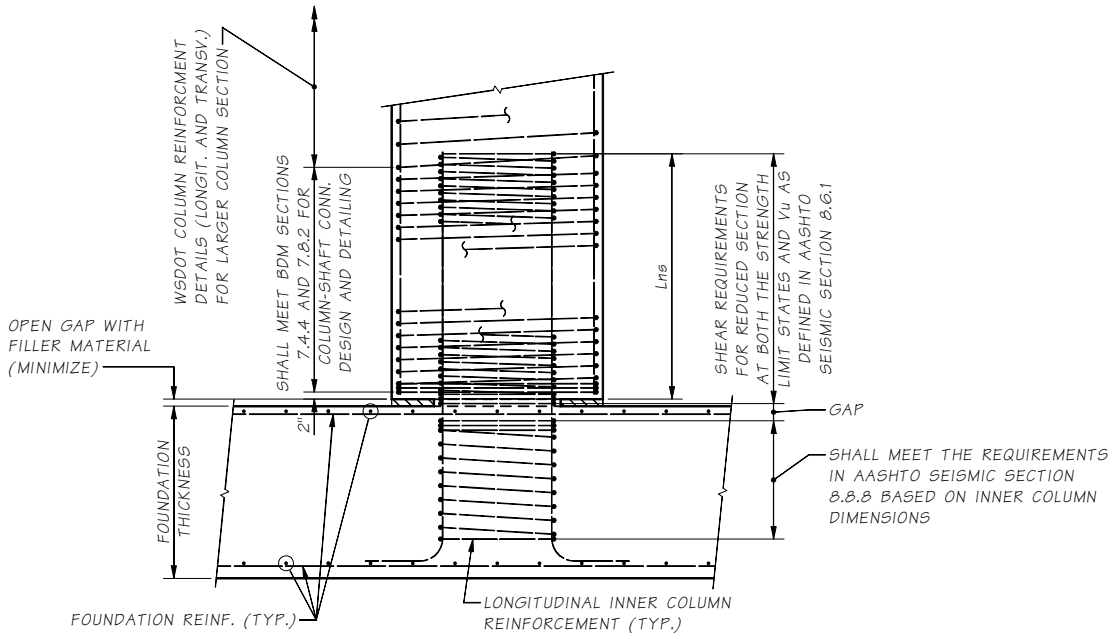

7.3.7.C Gap in Concrete at Reduced Column Section

The gap shall be minimized, but shall not be less than 2″. It shall also be designed to accommodate the larger of 1.5 times the calculated service, strength or extreme event elastic rotation demand or the plastic rotation capacity, as determined from an inelastic pushover analysis. In no loading condition shall the edge of the larger column section contact the footing.

The gap shall be constructed with a material sufficiently strong to support the wet concrete condition. The material in the gap must keep soil or debris out of the gap for the life of the structure. This is especially important if the gap is to be buried and inspection access is difficult. If a filler material is used in this gap which can transfer compressive forces, then the gap shall be increased to account for this compressive force. If a filler material can meet construction and service requirements, it can be left in place after construction. Otherwise the gap shall be cleared and covered, or the gap shall be filled with a material that meets the service requirements. See Figure 7.3.7-2.

Figure 7.3.7-2 Open Gap Detail

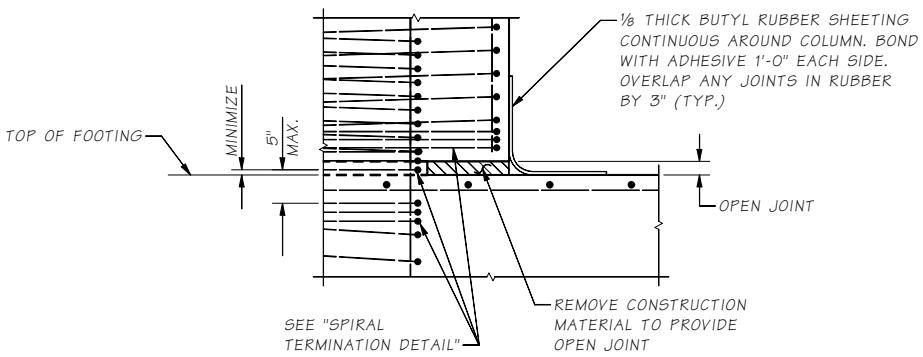

7.4 Crossbeams

7.4.1 General Design

The following is the recommended procedure for strength design and load rating of a two-stage, integral, non-prestressed crossbeam at multicolumn intermediate piers supporting precast superstructures. The procedure is based on beam theory for a tension-controlled element, which is an acceptable method for design and load rating. The strut and tie method is also an acceptable procedure.

7.4.1.A Stage I Design

1. Obtain load effects on the lower stage I crossbeam. The dead loads on the crossbeam typically include the self-weight of the lower crossbeam, girders, diaphragms, bridge deck, and the dead load from the upper stage II portion of the crossbeam. Additionally:
   - A construction load equal to 15 psf over the entire deck area shall be included in the Strength I and III load combinations. This construction load is intended to account for formwork, work decks, miscellaneous materials and equipment, and any construction related live loads (Bidwell finishing machine, etc.). The load factor for the construction load shall be in accordance with Section 3.6.
   - Strength IV, which is the load combination relating to very high dead load to live load force effects, need not be considered for this condition as clarified in the 7th Edition of the LRFD-BDS.
   - Torsion due to unbalanced loading on the stage I crossbeam shall be considered. The unbalanced cases shall include at a minimum, the case where all girders are set on one side of the pier and the case where all girders are in place on both sides but the deck is only placed on one side of the pier.
2. Design the longitudinal reinforcement in the top and bottom of the lower crossbeam for the controlling strength load case.
3. Design the transverse reinforcement in the lower crossbeam considering the controlling strength shear demands, including the construction load previously described. Only the transverse reinforcement that is fully enclosed and anchored within the stage I crossbeam shall be considered to be effective.
4. Check minimum flexural and shear reinforcement, crack control by distribution of flexural steel, and temperature and shrinkage requirements.

7.4.1.B Stage II Design

1. The stage II crossbeam is full depth and fully composite with the stage I lower portion. Apply the total DC, DW, LL, TU, and all other applicable load effects on the stage II crossbeam, including loads which were applied to the stage I crossbeam. This is a simplified procedure assuming the entire full depth crossbeam is cast monolithic, and it may imply some load redistribution. The construction load of 15 psf need not be considered in the stage II analysis.

2. Design the top and bottom longitudinal reinforcement for the controlling strength load case. For the bottom reinforcement, use the largest required steel area for either the stage I or stage II case. The crossbeam may either be treated as a rectangular section, or the effective width of the deck can be considered as a "T" section. The top longitudinal reinforcement in the stage I lower crossbeam is typically ignored.

3. Design the transverse reinforcement for the combination of the controlling strength load case. For most crossbeams, torsion in the stage II analysis can be ignored. The concrete shear resistance shall be computed assuming the full depth section. The transverse steel shear resistance shall be based on the sum of V_{s1} and V_{s2}. The V_{s1} resistance shall be based on the shear steel and depth d_v from the stage I crossbeam. The V_{s2} resistance shall be based on the shear steel that runs full depth and a d_v value corresponding to the full depth of the crossbeam. Each vertical leg of transverse reinforcement shall only be considered in either V_{s1} or V_{s2}, never both. In the zones where girders are located, the outer rows of full depth shear reinforcement is terminated. For inner rows of full depth shear reinforcement, the spacing may be increased where there is congestion due to extended girder strands, however the designer shall maintain as much shear reinforcement in these zones as practicably possible.

   In the regions where shear reinforcement spacing varies across the shear failure plane, the resistance may be determined based on the average shear reinforcement area per unit length within the shear failure plane. The average shear reinforcement area per unit length may be determined as follows:

$$\left(\frac{A_v}{s}\right)_{avg} = \frac{\sum \left(\frac{A_v}{s}\right)_i a_i}{d_v \cot\theta} \qquad 7.4.1\text{-}1$$

   Where:

   A_v = area of shear reinforcement
   s = spacing of shear reinforcement
   a_i = horizontal distance of shear plane crossing the stirrup zone i
   d_v = effective shear depth
   $\cot\theta$ = for the simplified method, θ = 45 degrees and $\cot\theta$ = 1.0

   See Figure 7.4.1-1. For deep girders, the shear failure plane at 45 degrees will typically run beyond the girder width and will intersect shear reinforcement on either side of the girder. For smaller depth girders, such as WF42Gs, this average shear reinforcement method may not suffice and more steel will need to be placed in the girder zones, regardless of congestion constraints.

   The concrete shear resistance, V_c, shall be based on the depth d_v from the stage II crossbeam.

Figure 7.4.1-1 Effective Crossbeam Shear Reinforcement

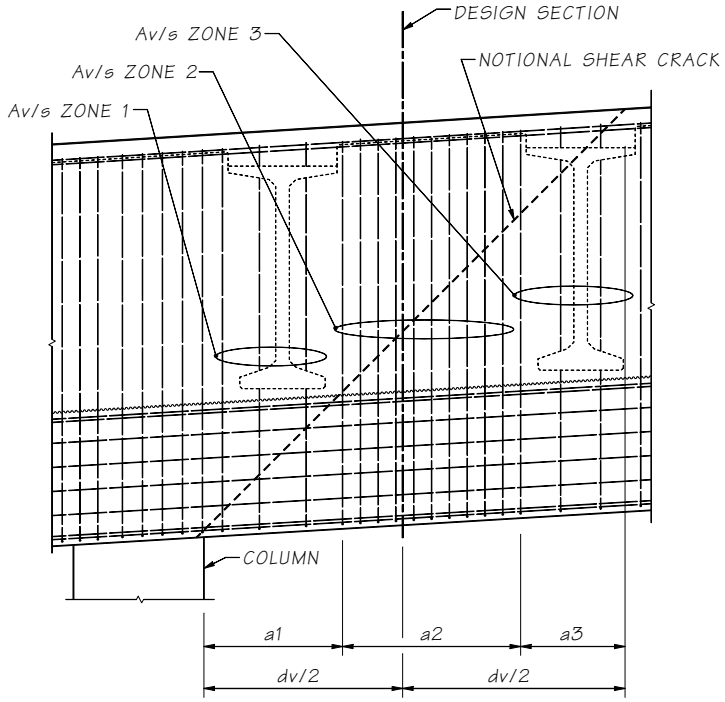

4. Check minimum flexural and shear reinforcement, crack control by distribution of flexural steel, and temperature and shrinkage requirements.

7.4.1.C Other Crossbeam Types

A special case of two stage integral crossbeam is the single column “hammer head” type crossbeams. A similar methodology can be employed for these crossbeams. The top flexural reinforcement in the stage I section is designed for the applicable stage I loads. In the stage II analysis, the stage I and stage II loads are applied to the full depth section and the top reinforcement in the full depth composite section shall be designed for the total stage I and II demands. The stage I top reinforcement can be considered in the stage II analysis, although it may not be very effective. The section can be considered rectangular or as a “T” section by including deck steel reinforcement within the effective width.

Although not discussed here, capacity protection of integral crossbeams will likely control the final design. The analysis should treat the full depth crossbeam as if it was cast monolithic. Various analytical methods can be utilized to obtain the demands in the crossbeam from the column plastic moment and shear, and they shall be determined by the designer.

The analysis and design for prestressed girder expansion pier crossbeams and most crossbeams for steel plate and box girder bridges is straightforward and consists of only one stage. All dead and live loads are applied directly to the crossbeam. The designer should consider conditions where torsion may be induced by unbalanced loading during the construction and/or permanent phases. The 15 psf construction load shall not be included with any vehicle live load combinations.

Load rating of the integral 2-stage crossbeams shall follow the methods described for the Stage II analysis using the applicable load rating live loads.

7.5 Abutment Design and Details

7.5.1 General

Bridge abutments support the superstructure and roadway embankment enhancing serviceability of the superstructure, and can potentially enhance seismic response of the bridge. Design of the abutments needs to consider layout and geometry of the abutment, superstructure loads and movements, drainage, approach slab, and seismic effects. Water flow and possible scour need also be considered for bridges crossing waterways.

7.5.1.A Abutment Types

There are five abutment types described in the following section that have been used by the Bridge and Structures Office. Conventional stub and cantilever abutments on spread footings, piles, or shafts are the preferred abutment type for WSDOT bridges. The representative types are intended for guidance only and may be varied to suit the requirements of the bridge being designed.

Significant measures may be required to accommodate bridge security and deter inappropriate access to the bridge abutment areas. Designs may include steel security fences or concrete curtain walls. Configuring the land form at the abutment or increasing the stem wall height to deter access may also be considered. Where required, coordinate with the State Bridge and Structures Architect during final design.

7.5.1.A.1 *Stub Abutments*

Stub abutments are short abutments where the distance from the girder seat to top of footing is less than approximately 4 feet, see Figure 7.5.1-1. The footing and wall can be considered as a continuous inverted T-beam. The analysis of this type abutment shall include investigation into both bending and shear stresses parallel to centerline of bearing. If the superstructure is relatively deep, earth pressure combined with longitudinal forces from the superstructure may become significant.

Figure 7.5.1-1 Stub Abutments

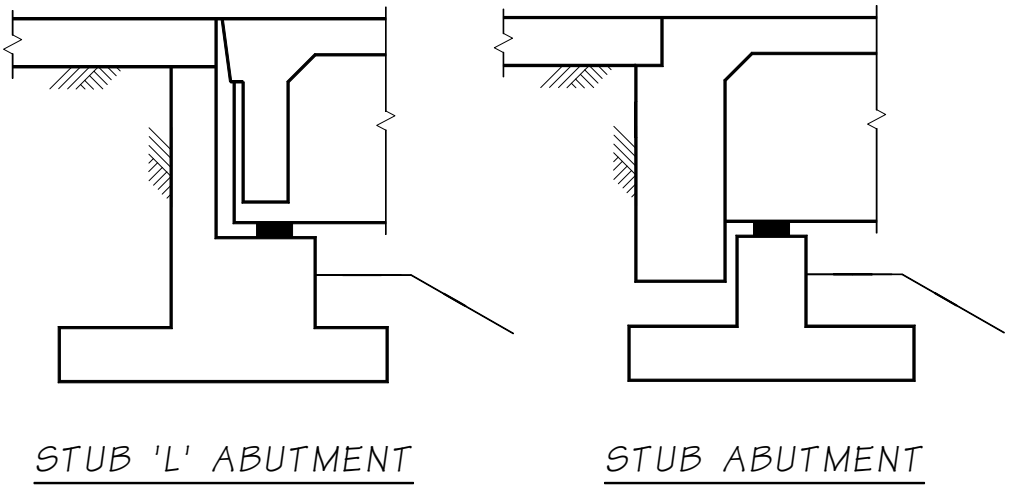

7.5.1.A.2 *Cantilever Abutments*

If the height of the wall from the bearing seat down to the bottom of the footing exceeds the clear distance between the girder bearings, the assumed 45° lines of influence from the girder reactions will overlap, and the dead load and live load from the superstructure can be assumed equally distributed over the abutment width. The design may then be carried out on a per-foot basis. The primary structural action takes place normal to the abutment, and the bending moment effect parallel to the abutment may be neglected in most cases. The wall is assumed to be a cantilever member fixed at the top of the footing and subjected to axial, shear, and bending loads see Figure 7.5.1-2.

Figure 7.5.1-2 Cantilever Abutments

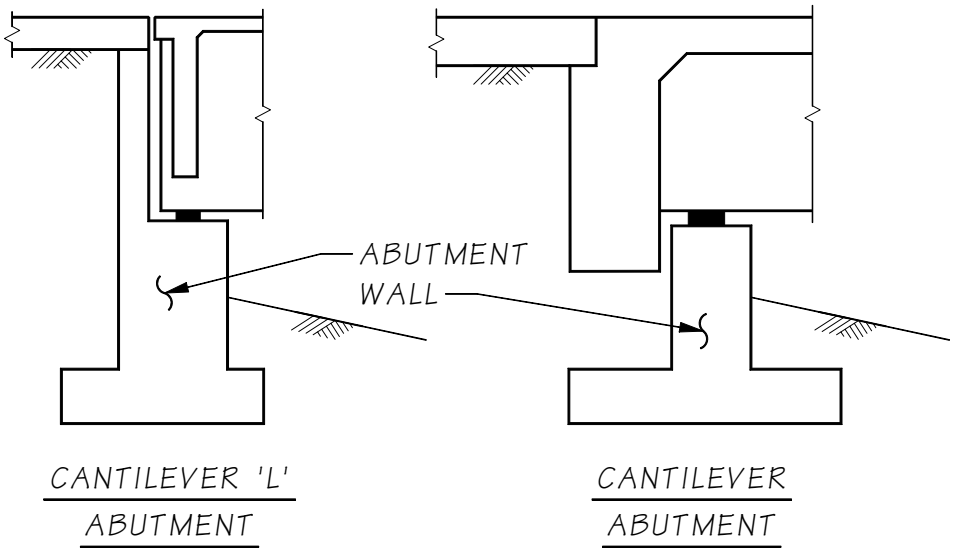

7.5.1.A.3 *Rigid Frame Abutments*

Abutments that are part of a rigid frame are generically shown in Figure 7.5.1-3. At-Rest earth pressures (EH) will apply to these structures. The abutment design should include the live load impact factor from the superstructure. However, impact shall not be included in the footing design. The rigid frame itself should be considered restrained against sidesway for live load only. LRFD-BDS Chapter 12 addresses loading and analysis of rigid frames that are buried (box culverts).

Figure 7.5.1-3 Rigid Frame Abutment

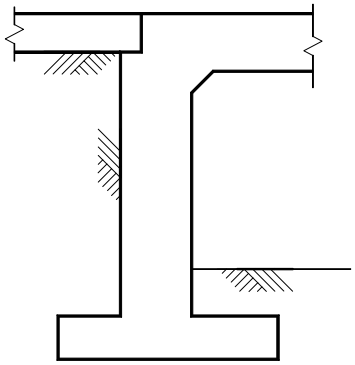

7.5.1.A.4 *Bent-Type Abutments*

An abutment that includes a bent cap supported on columns or extended piles or shafts is shown in Figure 7.5.1-4. For structural reasons it may be required to construct a complete wall behind a bridge abutment prior to bridge construction. Bent-type abutments may be used where the abutment requires protection from lateral and vertical loads and settlement. This configuration shall only be used with the approval of the State Bridge Design Engineer for abutments 30 ft or greater in height. It shall not be used where initial construction cost is the only determining incentive. The approach embankment wall shall have a concrete fascia.

A bridge approach slab shall span a maximum of 6′-0″ between the back of pavement seat and the face of the approach embankment wall. The approach slab shall be designed as a beam pinned at the back of pavement seat. The approach slab shall support traffic live loads and traffic barrier reactions. The approach embankment wall shall support the vertical live load surcharge. The approach slab shall not transfer loads to the approach embankment wall facing. The minimum gap between the back of the columns, piles, or shafts and the retained structure shall be 2'-0" to allow for inspection access.

An enclosing fascia wall is required to prohibit unwanted access with associated public health, maintenance staff safety, and law enforcement problems. The design shall include a concrete fascia enclosing the columns and void. The fascia shall have bridge inspection access on the bridge side of the columns, piles, or shafts. The access door shall be a minimum 3′-6″ square with the sill located 2′-6″ above finished grade. Contact the State Bridge and Structures Architect for configuration and concrete surface treatments. Ventilation shall be incorporated into the design of the enclosed space. There shall be a minimum of two 4 inch diameter air vent openings near the top of the enclosing fascia wall. The air vents shall be spaced approximately 5'-0" apart and shall be on either side of the access door. Air vents shall conform to Figure 5.2.6-2. Design shall be reviewed and approved by the WSDOT State Bridge Preservation Office and the State Bridge and Structures Architect for access and safety requirements.

When approved by the State Bridge and Structures Architect, the columns may be located just outside the fascia. In this case, the access criteria of Section 5 shall be followed.

Figure 7.5.1-4 Bent-Type Abutment

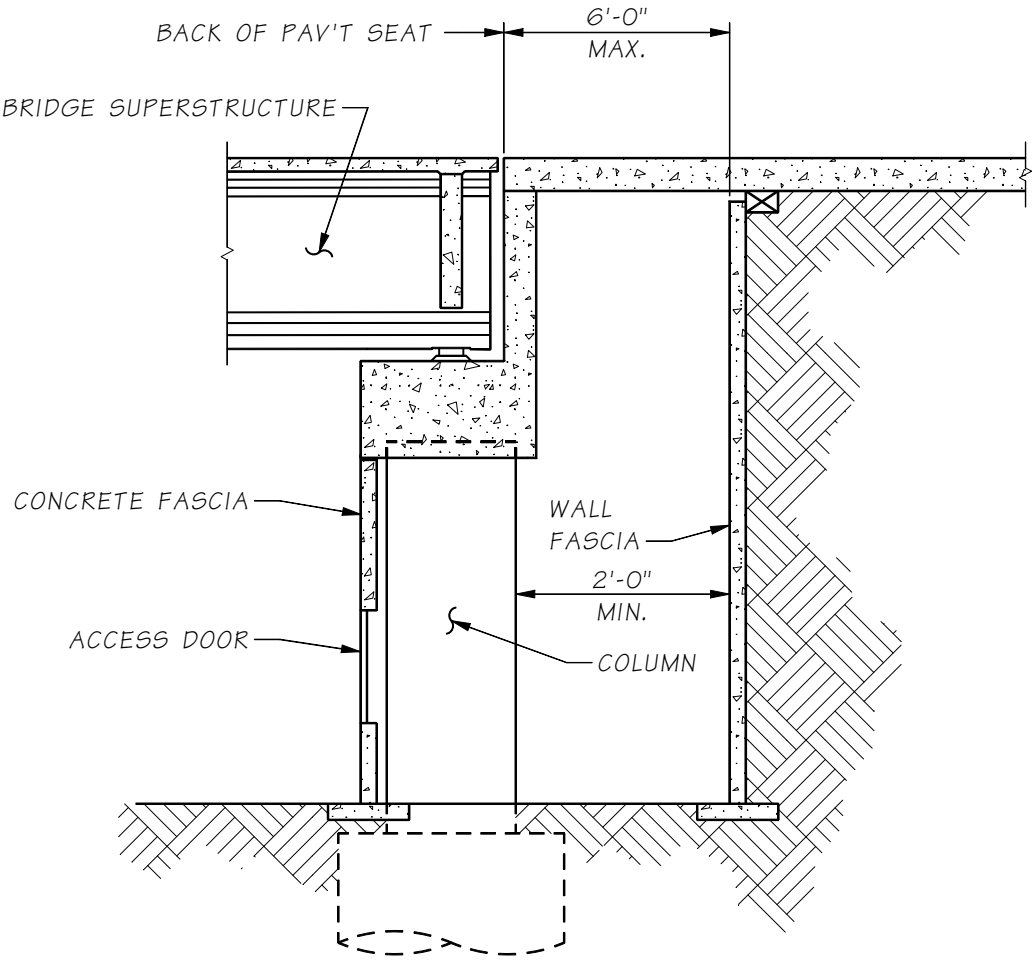

7.5.1.A.5 *Isolated Abutments*

An isolated abutment is an abutment that utilizes a separate retaining system to support the embankment and is shown in Figure 7.5.1-5. The gap between the abutment and the retaining system shall be wide enough to avoid contact of the two isolated structures due to movements caused by earthquakes, but shall not be less than 6 inches. This configuration shall only be used with the approval of the State Bridge Design Engineer for abutments 30 ft or greater in height. The approach embankment wall does not require a fascia.

A curtain wall shall be designed to enclose the gap on the bridge side of the retaining system. This curtain wall is generally attached to the abutment. There shall not be any access designed within the abutment or curtain wall. However, the curtain wall shall have a future blockout location established in the plans. The size of this future blockout shall be a minimum of the gap dimension or 3'-0" square and shall be centered on the gap. Ventilation shall be incorporated into the design of the enclosed space. Access design shall be reviewed and approved by the WSDOT State Bridge Preservation Office and the State Bridge and Structures Architect.

The approach slab requirements from Section 4 are applicable to this type of abutment.

Figure 7.5.1-5 Isolated Abutment

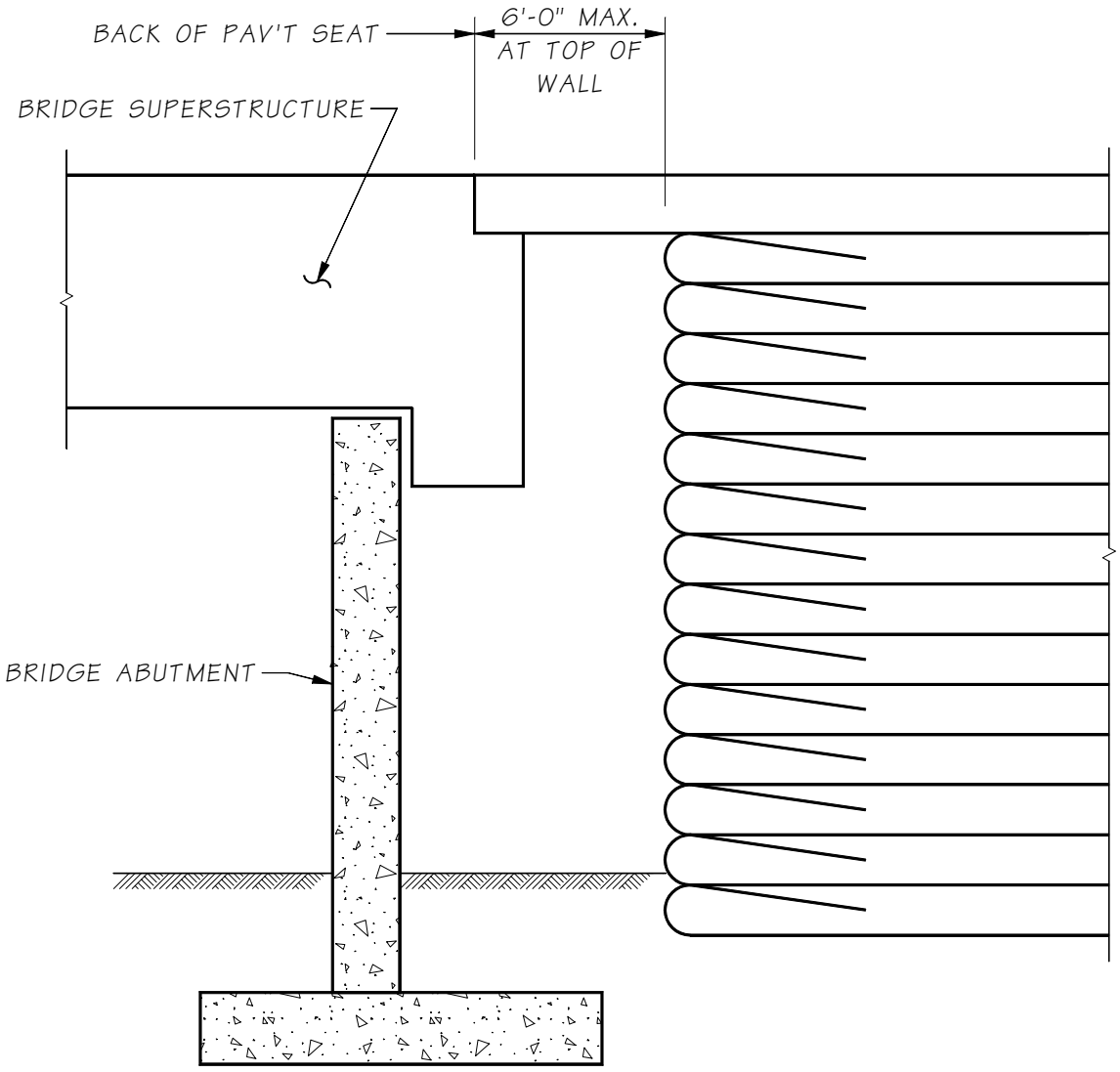

7.5.2 Abutments Supported By Mechanically-Stabilized Earth Walls

Bridge abutments may be supported on mechanically-stabilize earth (MSE) walls, including geosynthetic retaining walls (with and without structural facing), structural earth walls and reinforced soil. Abutments supported on these walls shall be designed in accordance with the requirements of this manual and the following documents (listed in order of importance):

1. *Geotechnical Design Manual* (GDM) Section 15.5.3.6.
2. LRFD-BDS.
3. Design and Construction of Mechanically Stabilized Earth Walls and Reinforced Soil Slopes, Volume I and II, FHWA-NHI-10-024, FHWA-NHI-10-025.

Bridges with MSE supported abutments shall be designed as one of two types described below, and shall satisfy the associated design requirements. Structural earth walls shall also follow the requirements given in Section 8.1.6.

7.5.2.A Single-span Bridges with Precast Slab Superstructures Supported Directly on Reinforced Soil

These bridges shall conform to the following requirements, see Figures 7.5.2-1 and 7.5.2-2:

1. Walls supporting abutments shall be special designed wall systems, and shall conform to GDM Section 15.5.3.6 MSE Wall Supported Abutments. Additionally, the top 3 rows of dry-cast modular concrete blocks shall be grouted with #4 rebar.
2. The superstructure length shall not exceed 60 feet between wall facings, and the bearing location shall be taken as the midpoint between the concrete beam and the girder end.
3. The superstructure shall include a 5″ minimum thick C.I.P. composite topping.
4. The end of the precast superstructure shall be at least 4 feet from the back face of the MSE wall. Minimum seat width requirements shall be provided on the reinforced soil bearing area.
5. A foam board detail shall be used to create a 1 foot horizontal buffer between the bearing area and the wall facing. The foam board shall be designed to crush under the weight of the girders to allow the girders to bear against the reinforced soil. The maximum compressive strength of the foam board shall be included in the contract plans.
6. The vertical gap between the top of wall facing and the bottom of superstructure shall be 4″ or 2 percent of the abutment height, whichever is greater.
7. Prestressing strands in the zone bearing on reinforced soil shall have a minimum concrete cover of 2″. Transverse reinforcing steel within this zone shall have a minimum concrete cover of 1½″. All prestressing strand shall be removed to a 2″ depth from the end of the slab. The voids shall be patched with epoxy grout.
8. Where voided slab superstructures are used, the slab section shall be solid from the end of the slab to at least 1 foot in front of the fascia.
9. The abutment shall be designed for a bearing pressure at service loads not to exceed 2.0 tons per square foot (TSF) and a factored load at strength and extreme limit states not to exceed 3.5 TSF. The bearing pressure may be increased to 3.0 TSF at service loads and 4.5 TSF at strength and extreme limit states if a vertical settlement monitoring program is conducted in accordance with WSDOT GDM Section 15.5.3.6.
10. Bridge approach slabs may be omitted.
11. Erosion shall be prevented off the ends of the bridge. Coordinate with hydraulics as required.
12. The minimum horizontal clearance for embankment widening at the end of the bridge shall be 3 feet from back face of traffic barrier.
13. Lateral restraint shall be provided to resist transverse loads. Passive resistance of the soil above the soffit of the girder shall be neglected. The transverse load shall not be less than the horizontal seismic force; which is the site adjusted peak ground acceleration, A_s, times the tributary permanent load.

Figure 7.5.2-1 Reinforced Soil Abutment with Dry-Cast Modular Block Facing

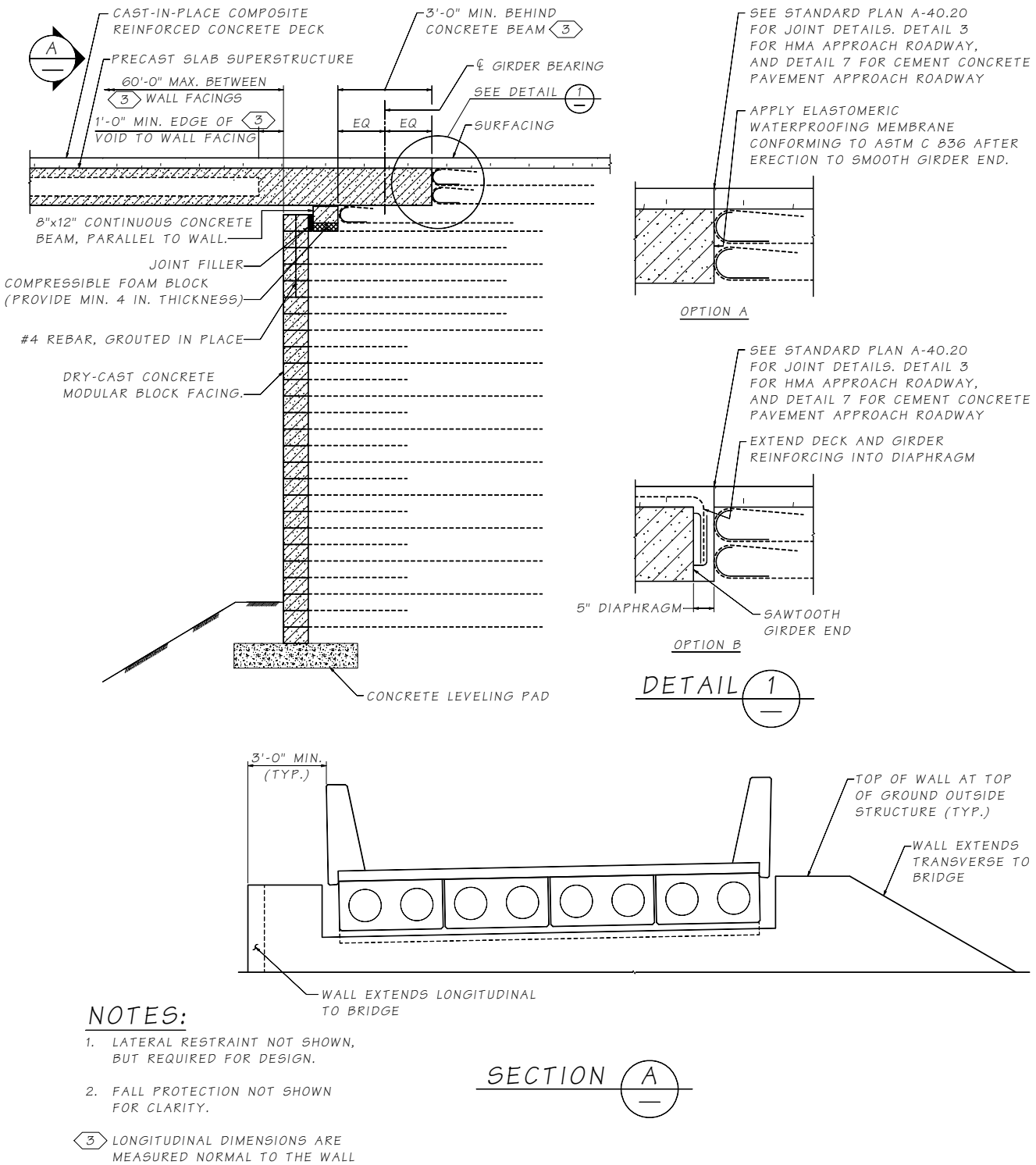

NOTES:

1. LATERAL RESTRAINT NOT SHOWN, BUT REQUIRED FOR DESIGN.
2. FALL PROTECTION NOT SHOWN FOR CLARITY.

3 LONGITUDINAL DIMENSIONS ARE MEASURED NORMAL TO THE WALL

Figure 7.5.2-2 Reinforced Soil Abutment with Full-Height Concrete Facing

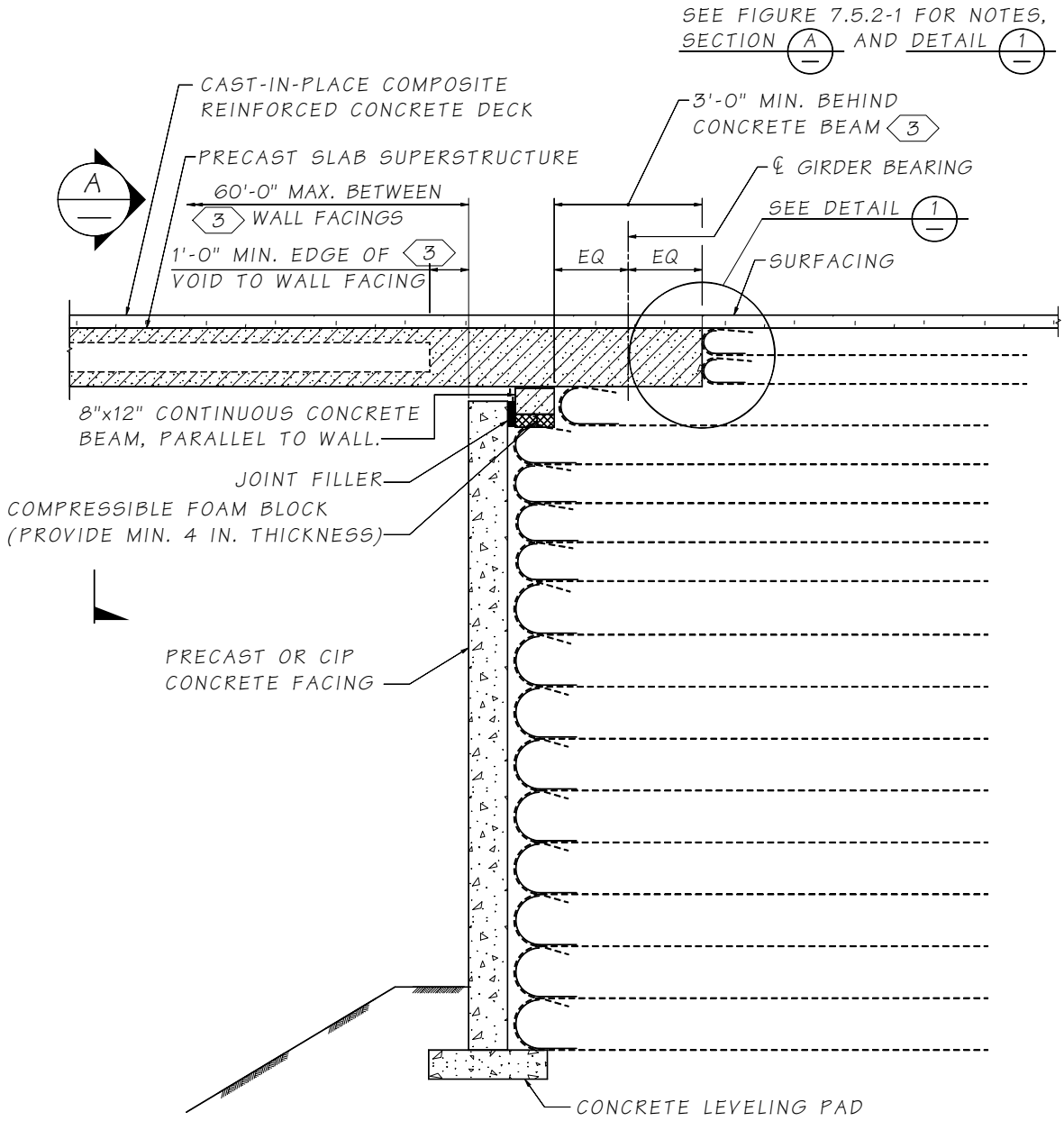

7.5.2.B Bridges with spread footing abutments supported by a geosynthetic wall or SE wall

These bridges shall conform to the following requirements, see Figure 7.5.2-3:

1. Walls shall be 30 feet or less in total height, which includes the retained soil height up to the bottom of the embedded spread footing.
2. For SE walls, the front edge of the bridge footing shall be placed 4 feet minimum from the back face of the fascia panel. For geosynthetic retaining walls with a wrapped face, the front edge of the bridge footing shall be placed 2 feet minimum from the back face of the fascia panel.
3. The abutment footing shall be covered by at least 6 inch of soil for frost protection.
4. The superstructure of continuous span bridges shall be designed for differential settlement between piers.
5. Abutment spread footings shall be designed for bearing pressure at service loads not to exceed 2.0 TSF and factored load at strength and extreme limit states not to exceed 3.5 TSF. The bearing pressure may be increased to 3.0 TSF at service loads and 4.5 TSF at strength and extreme limit states if a vertical settlement monitoring program is conducted in accordance with the *Geotechnical Design Manual* Section 15.5.3.5.
6. Walls supporting abutments shall be special designed wall systems, and shall conform to GDM Section 15.5.3.5 MSE Wall Supported Abutments. Additionally, the top 3 rows of dry-cast modular concrete blocks shall be grouted with #4 rebar.
7. Concrete slope protection shall be provided. Worker fall protection shall be provided in accordance with *Design Manual* Chapter 1160.
8. The presence of a landform shelf beneath the superstructure between the abutment face and top of wall may constitute an attractive nuisance. Limiting access to this area per BDM Chapter 2.8, may also be required. Where required, coordinate with the State Bridge and Structures Architect for bridge security issues.

Deviations from the design requirements require approval from the State Bridge Design Engineer and the State Foundation Engineer.

Figure 7.5.2-3 Spread Footing on SE Wall or Geosynthetic Wall

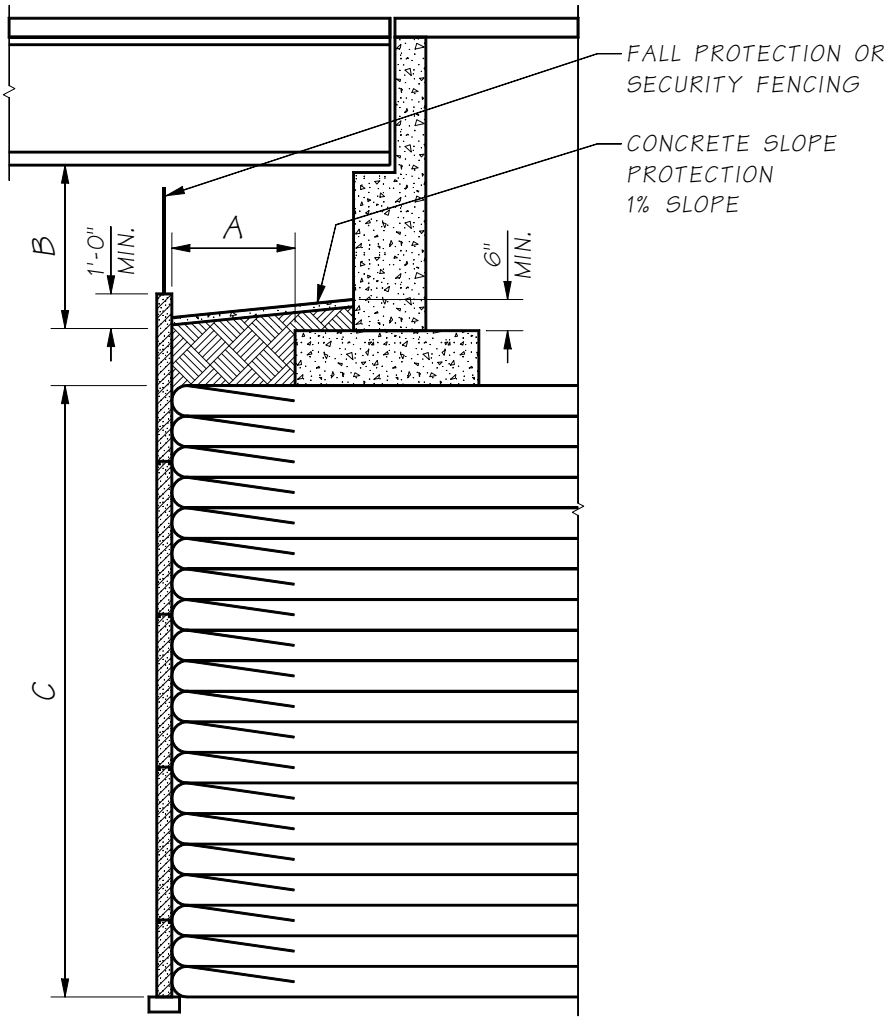

A. 4'-0" MIN. FOR SE WALLS (PRECAST CONCRETE PANEL FACE OR CAST-IN-PLACE CONCRETE FACE) AND 2'-0" MIN. FOR SPECIAL DESIGNED GEOSYNTHETIC RETAINING WALLS WITH WRAPPED FACE.

B. 3'-0" MIN. FOR GIRDER BRIDGES AND 5'-0" MIN. FOR NON-GIRDER, SLAB, AND BOX GIRDER BRIDGES. (SEE SECTION 7.5.3)

C. 30'-0" MAXIMUM (SEE SECTION 7.5.2B.1)

7.5.3 Embankment at Abutments

The minimum clearances for the embankment at the front face of abutments shall be as indicated on Standard Plans A-50.10.00 through A-50.40.00. At the ends of the abutment, the fill may be contained with wing walls or in the case of concrete structures, placed against the exterior girders.

The minimum clearance between the bottom of the superstructure and the embankment below shall be 3’-0” for girder bridges and 5’-0” for non-girder, slab, and box girder bridges.

The presence of a horizontal landform shelf beneath the superstructure at the abutment face may constitute an attractive nuisance. Limiting access to superstructure, by increasing the stem wall height, may also be required. Where required, coordinate with the State Bridge and Structures Architect for bridge security issues.

7.5.4 Abutment Loading

In general, bridge abutment loading shall be in accordance with LRFD-BDS Chapter 3 and Chapter 11. The following simplifications and assumptions may be applied to the abutment design. See Section 7.7.4 for a force diagram of typical loads as they are applied to an abutment spread footing.

7.5.4.A Dead Load - DC

Approach slab dead load reaction taken as 2 kips/foot of wall applied at the pavement seat.

7.5.4.B Live Load - LL

Live load impact does not apply to the abutment. For bridge approach slab live load assumptions, see Section 10.6. If bridge approach slabs are not to be constructed in the project (e.g. bride approach slab details are not included in the bridge sheets of the Plans) a live load surcharge (LS) applies.

7.5.4.C Earth Pressure - EH, EV

Active earth pressure (EH) and the unit weight of backfill on the heel and toe (EV) will be provided in a Geotechnical Report. The toe fill shall be included in the analysis for overturning if it adds to overturning.

Passive earth pressure resistance (EH) in front of a footing may not be dependable due to potential for erosion, scour, or future excavation. Passive earth pressure may be considered for stability at the strength limit state only below the depth that is not likely to be disturbed over the structure's life. The State Geotechnical Office should be contacted to determine if passive resistance may be considered. The top two feet of passive earth pressure should be ignored.

7.5.4.D Earthquake Load - EQ

Seismic superstructure loads shall be transmitted to the substructure through bearings, girder stops or restrainers. As an alternative, the superstructure may be rigidly attached to the substructure. The Extreme Event I load factor for all EQ induced loads shall be 1.0.

For bearing pressure and wall stability checks, the seismic inertial force of the abutment, P_{IR}, shall be combined with the seismic lateral earth pressure force, P_{AE}, as described in LRFD-BDS Section 11.6.5.1.

For structural design of the abutment, the seismic inertial force, P_{IR}, shall be combined with the seismic lateral earth pressure force, P_{AE}, as described in LRFD-BDS Section 11.6.5.1 for stability checks. The inertial force shall include the inertia of the concrete, but need not include the inertia of the soil above the heel.

7.5.4.E Bearing Forces - TU

For strength design, the bearing shear forces shall be based on ½ of the annual temperature range. This force is applied in the direction that causes the worst case loading.

For extreme event load cases, calculate the maximum friction force (when the bearing slips) and apply in the direction that causes the worst case loading.

7.5.5 Temporary Construction Load Cases

7.5.5.A Superstructure Built after Backfill at Abutment

If the superstructure is to be built after the backfill is placed at the abutments, the resulting temporary loading would be the maximum horizontal force with the minimum vertical force. During the abutment design for all abutment types except bent-type or isolated, a load case shall be considered to check the stability and sliding of abutments after placing backfill but prior to superstructure placement. This load case is intended as a check for a temporary construction stage, and not meant to be a controlling load case that would govern the final design of the abutment and footing. This loading will generally determine the tensile reinforcement in the top of the footing heel.

If this load case check is found to be satisfactory, a note shall be added to the general notes in the contract plans and the contractor will not be required to make a submittal requesting approval for early backfill placement. This load case shall include a 2′-0″ deep soil surcharge for the backfill placement equipment (LS) as covered by the *Standard Specifications* Section 2-03.3(14)I.

7.5.5.B Wing Wall Overturning

It is usually advantageous in sizing the footing to release the falsework from under the wing walls after some portion of the superstructure load is applied to the abutment. A note can cover this item, when applicable, in the sequence of construction on the plans.

7.5.6 Abutment Bearings and Girder Stops

All structures shall be provided with some means of restraint against lateral displacement at the abutments due to temperature, shrinkage, wind, earth pressure, and earthquake loads, etc. Such restraints may be in the form of concrete girder stops with vertical elastomeric pads, concrete hinges, or bearings restrained against movement.

All prestressed girder bridges in Western Washington (within and west of the Cascade mountain range) shall have girder stops between all girders at abutments and intermediate expansion piers. This policy is based on fact that the February 28, 2001 Nisqually earthquake caused significant damage to girder stops at bridges where girder stops were not provided between all girders. In cases where girder stops were cast prior to placement of girders and the 3″ grout pads were placed after setting the girders, the 3″ grout pads were severely damaged and displaced from their original position.

7.5.6.A Abutment Bearings

Longitudinal forces from the superstructure are normally transferred to the abutments through the bearings. The calculated longitudinal movement shall be used to determine the shear force developed by the bearing pads. The shear modulus of Neoprene at 70°F (21°C) shall be used for determining the shear force. However, the force transmitted through a bearing pad shall be limited to that which causes the bearing pad to slip. Normally, the maximum percentage of the vertical load reaction transferred in shear is assumed to be 6 percent for PTFE sliding bearings and 20 percent for elastomeric bearing pads. For semi-integral abutments, the horizontal earth pressure acting on the end diaphragm is transferred through the bearings.

When the force transmitted through the bearing pads is very large, the designer should consider increasing the bearing pad thickness, using PTFE sliding bearings and/or utilizing the flexibility of the abutment as a means of reducing the horizontal design force. When the flexibility of the abutment is considered, it is intended that a simple approximation of the abutment deformation be made.

For semi-integral abutments with overhanging end diaphragms at the Extreme Event, the designer shall consider that longitudinal force may be transmitted through the end diaphragm. If the gap provided is less than the longitudinal displacement demand, assume the end diaphragm is in contact with abutment wall. In this case, the bearing force shall not be added to seismic earth pressure force.

7.5.6.B Bearing Seats

The bearing seats shall be wide enough to accommodate the size of the bearings used with a minimum edge dimension of 3″ and satisfy the requirements of LRFD-BDS Section 4.7.4.4. On L abutments, the bearing seat shall be sloped away from the bearings to prevent ponding at the bearings. The superelevation and profile grade of the structure should be considered for drainage protection. Normally, a ¼″ drop across the width of the bearing seat is sufficient.

7.5.6.C Transverse Girder Stops

Transverse girder stops are required for all abutments in order to transfer lateral loads from the superstructure to the abutment. Abutments shall normally be considered as part of the Earthquake Resisting System (ERS). Girder stops shall be full width between girder flanges except to accommodate bearing replacement requirements as specified in Chapter 9. The girder stop shall be designed to resist loads at the Extreme Limit State for the earthquake loading, Strength loads (wind etc.) and any transverse earth pressure from skewed abutments, etc. Girder stops are designed using shear friction theory and the shear strength resistance factor shall be $\varphi_s = 0.9$. The possibility of torsion combined with horizontal shear when the load does not pass through the centroid of the girder stop shall also be investigated.

Transverse stiffness of abutments may be considered in the overall dynamic response of bridge systems on a case-by-case basis upon State Bridge Design Engineer approval as specified in BDM Section 5.2.3.

The detail shown in Figure 7.5.6-1 may be used for prestressed girder bridges. Prestressed girders shall be placed in their final position before girder stops are cast to eliminate alignment conflicts between the girders and girder stops. Elastomeric girder stop pads shall run the full length of the girder stop. All girder stops shall provide ⅛″ clearance between the prestressed girder flange and the elastomeric girder stop pad.

For skewed bridges with semi-integral or end type A diaphragms, the designer shall evaluate the effects of earth pressure forces on the elastomeric girder stop pads. These pads transfer the skew component of the earth pressure to the abutment without restricting the movement of the superstructure in the direction parallel to centerline. The performance of elastomeric girder stop pads shall be investigated at Service Limit State. In some cases bearing assemblies containing sliding surfaces may be necessary to accommodate large superstructure movements.

Figure 7.5.6-1 Girder Stop Details

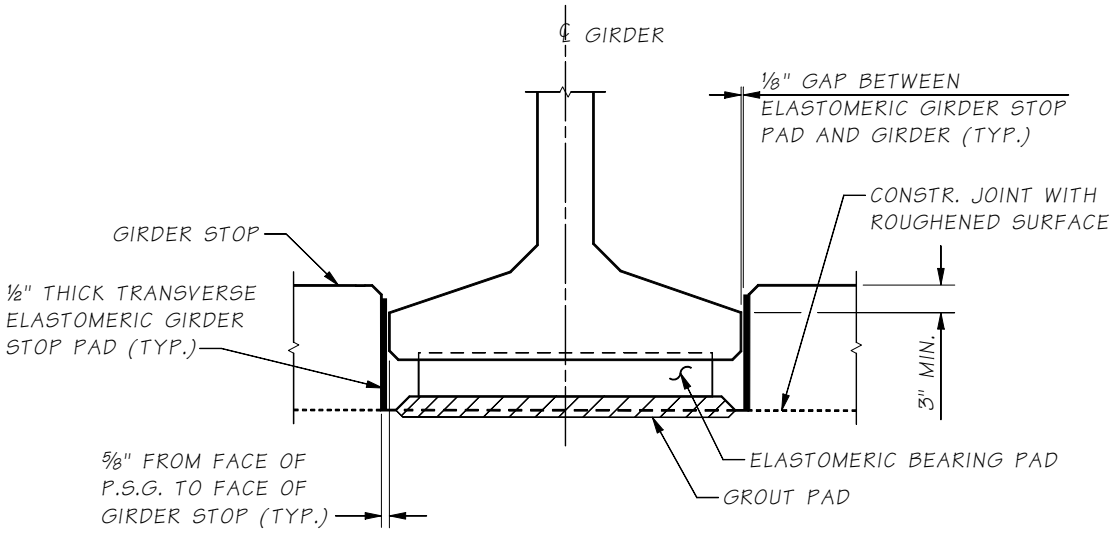

7.5.7 Abutment Expansion Joints

The compressibility of abutment expansion joints shall be considered in the design of the abutment when temperature, shrinkage, and earthquake forces may increase the design load. For structures without abutment expansion joints, the earth pressure against the end diaphragm is transmitted through the superstructure.

7.5.8 Open Joint Details

Vertical expansion joints extending from the top of footings to the top of the abutment are usually required between abutments and adjacent retaining walls to handle anticipated movements. The expansion joint is normally filled with premolded joint filler which is not water tight. There may be circumstances when this joint must be water tight; ⅛ butyl rubber may be used to cover the joint. The open joint in the barrier shall contain a compression seal to create a watertight joint. Figure 7.5.8-1 shows typical details that may be used. Aesthetic considerations may require that vertical expansion joints between abutments and retaining walls be omitted. This is generally possible if the retaining wall is less than 60 feet long.

The footing beneath the joint may be monolithic or cast with a construction joint. In addition, dowel bars may be located across the footing joint parallel to the wall elements to guard against differential settlement or deflection.

On semi-integral abutments with overhanging end diaphragms, the open joints must be protected from the fill spilling through the joint. Normally butyl rubber is used to seal the openings. See the end diaphragm details in the Appendices of Chapter 5 for details.

Figure 7.5.8-1 Open Joint Details Between Abutment and Retaining Walls

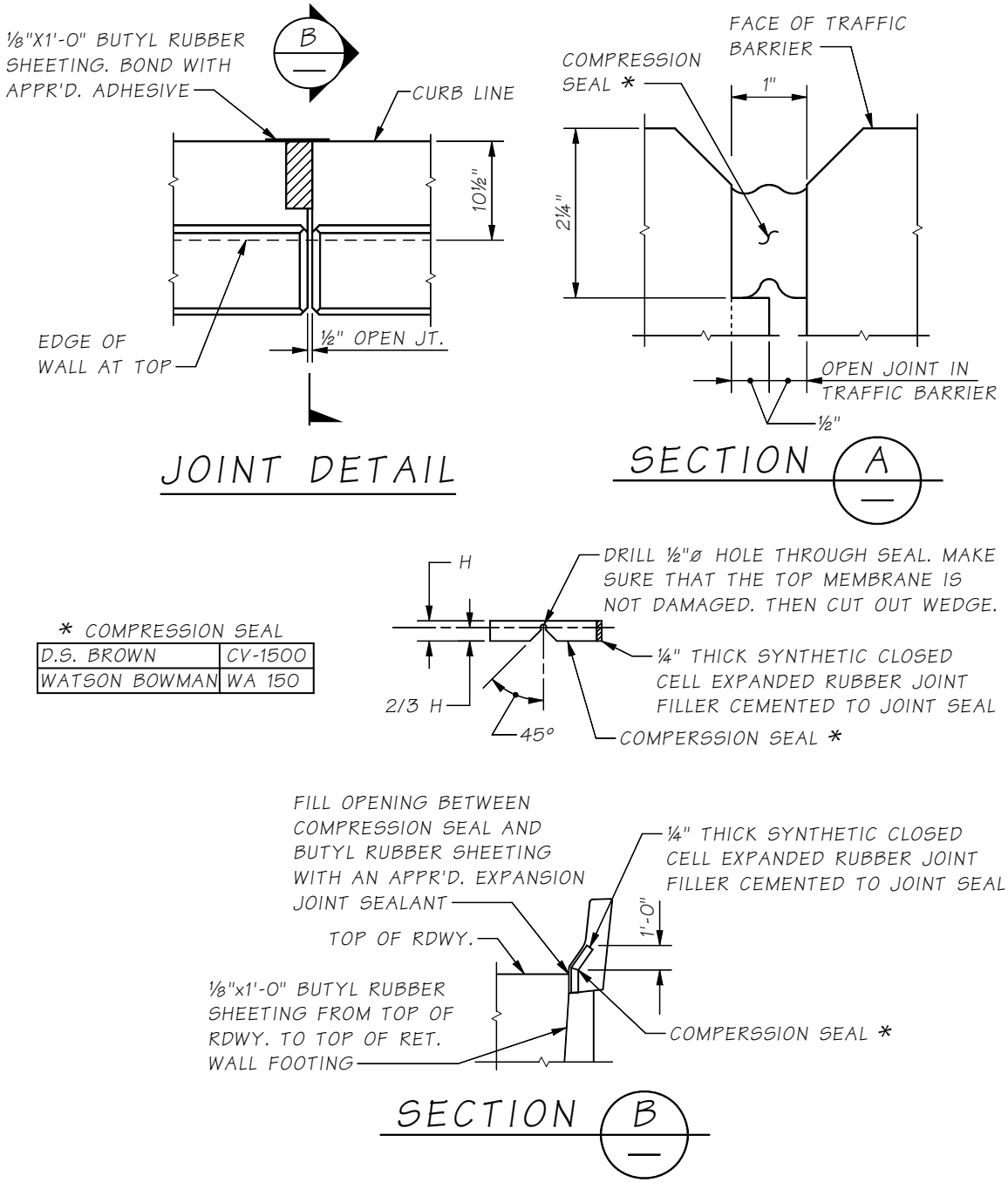

7.5.9 Construction Joints

Construction joints should be provided between the footings/caps and stems of abutments. Shear keys shall be provided at vertical construction joints and at any construction joint that requires shear transfer. To simplify construction, vertical construction joints are often necessary, particularly between the abutment and adjacent wing walls. The *Standard Specifications* cover the size and placement of shear keys. The location of such joints shall be detailed on the plans. Construction joints with roughened surface can be used at locations with horizontal joints. These should be shown on the plans and labeled *"Construction Joint With Roughened Surface."* When construction joints are shown in the Plans for the convenience of the Contractor and are not structurally required, they shall be indicated as optional. When construction joints are located within the face of the abutment wall, a pour strip or an architectural reveal should be used for a clean appearance. Details should be shown in the plans.

7.5.10 Abutment Wall Design

When the primary structural action is parallel to the superstructure or normal to the abutment face, the wall shall be treated as a column subjected to combined axial load and bending moment. Compressive reinforcement need not be included in the design of cantilever walls, but the possibility of bending moment in the direction of the span as well as towards the backfill shall be considered. A portion of the vertical bars may be cut off where they are no longer needed for stress.

7.5.10.A General

In general, horizontal reinforcement should be placed outside of vertical reinforcement to facilitate easier placement of reinforcement.

7.5.10.B Temperature and Shrinkage Reinforcement

LRFD-BDS Section 5.10.6 shall be followed for providing the minimum temperature and shrinkage steel near surfaces of concrete exposed to daily temperature changes and in structural mass concrete. On abutments that are longer than 60′, consideration should be given to have vertical construction joints to minimize shrinkage cracks.

7.5.10.C Cross Ties

The minimum cross tie reinforcement in abutment walls, shall be #4 tie bars with 135° hooks, in accordance with AASHTO 5.10.4.3 see Figure 7.5.10-1.

Figure 7.5.10-1 Cross Tie Details

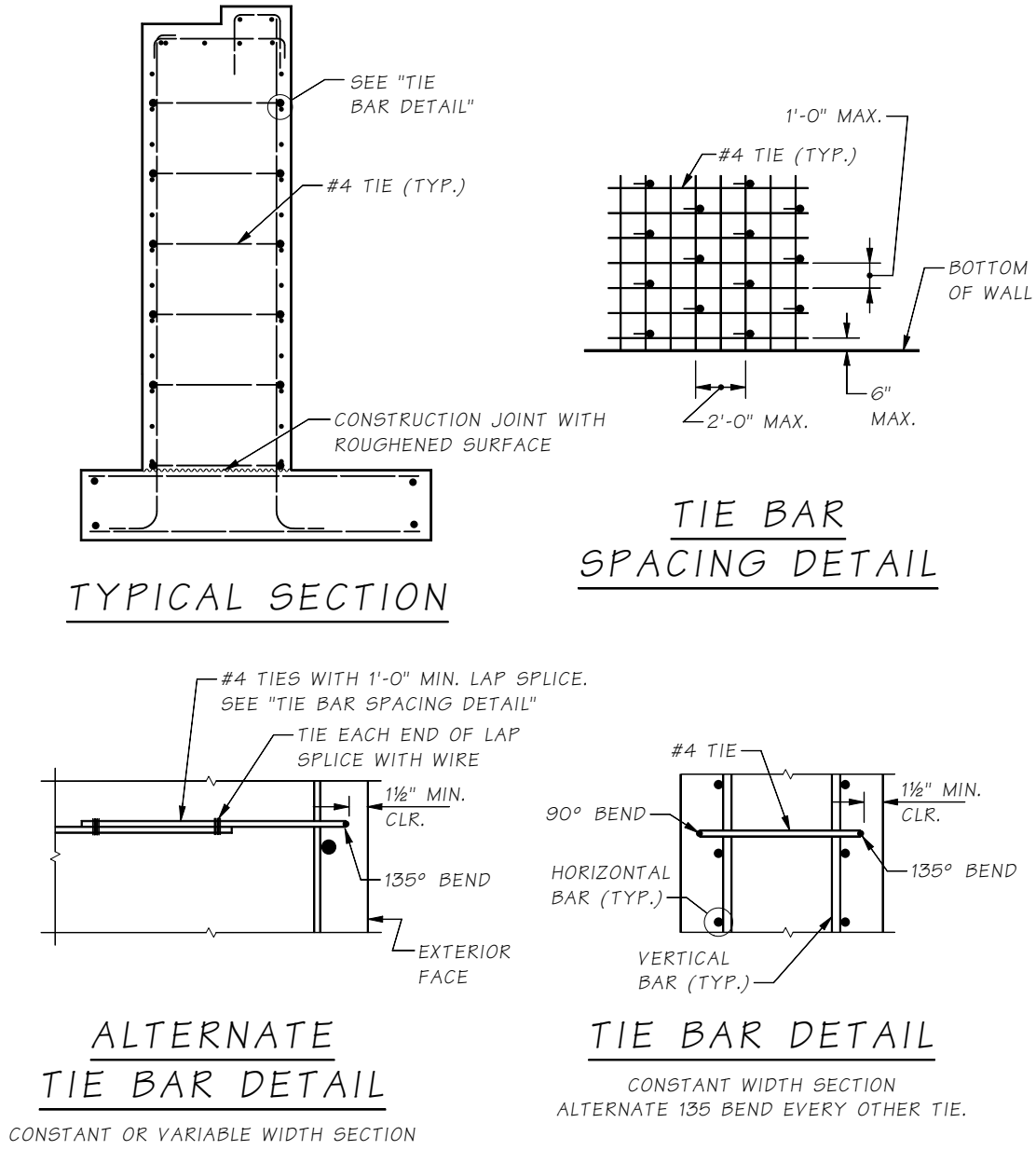

7.5.11 Drainage and Backfilling

3″ diameter weep holes shall be provided in all bridge abutment walls. These shall be located 6″ above the finish ground line at about 12′ on center. In cases where the vertical distance between the top of the footing and the finish groundline is greater than 10′, additional weep holes shall be provided 6″ above the top of the footing. No weep holes are necessary in cantilever wing walls where a wall footing is not used.

The details for gravel backfill for wall, underdrain pipe and backfill for drain shall be indicated on the plans. The gravel backfill for wall shall be provided behind all bridge abutments. The underdrain pipe and gravel backfill for drain shall be provided behind all bridge abutments except abutments on fills with a stem wall height of 5′ or less. When retaining walls with footings are attached to the abutment, a blockout may be required for the underdrain pipe outfall. Cooperation between Bridge and Structures Office and the Design PE Office as to the drainage requirements is needed to guarantee proper blockout locations.

Underdrain pipe and gravel backfill for drain are not necessary behind cantilever wing walls. A 3′ thickness of gravel backfill for wall behind the cantilever wing walls shall be shown in the plans.

The backfill for wall, underdrain pipe and gravel backfill for drain are not included in bridge quantities, the size of the underdrain pipe should not be shown on the bridge plans, as this is a Design PE Office design item and is subject to change during the design phase. Figure 7.5.11-1 illustrates backfill details.

Figure 7.5.11-1 Drainage and Backfill Details

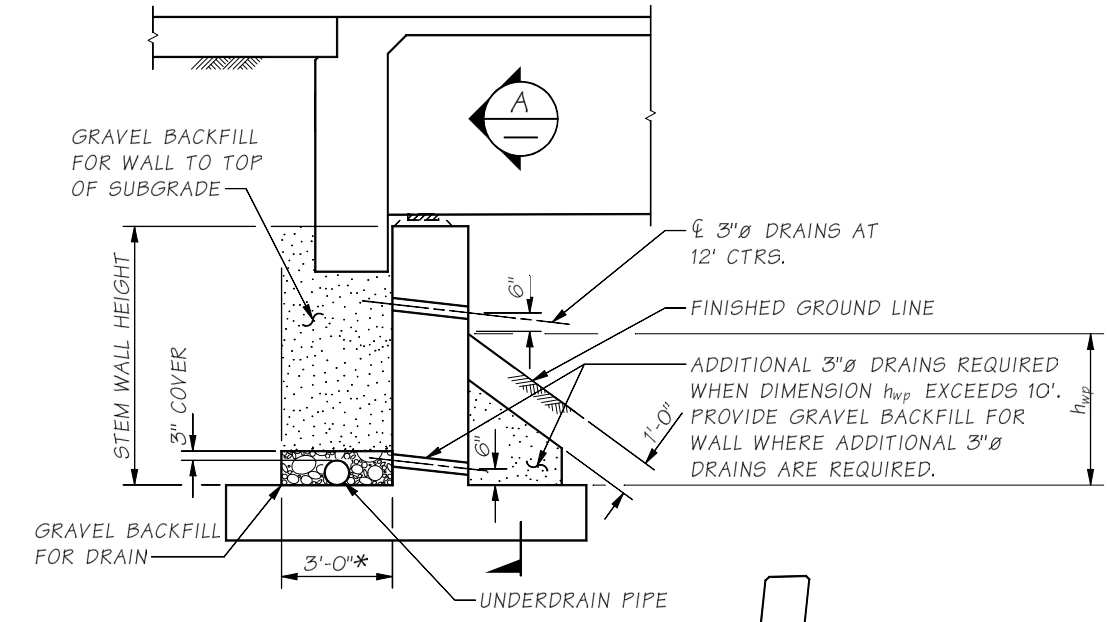

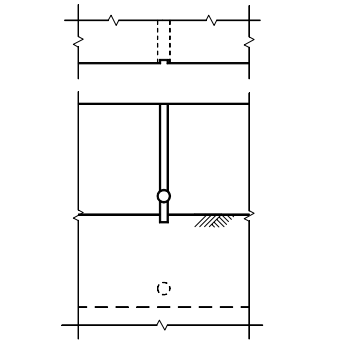

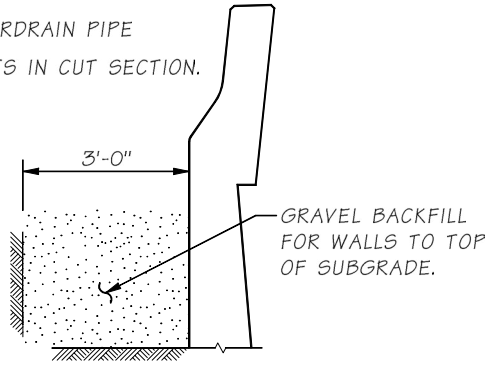

7.6 Abutment Wing Walls and Curtain Walls

Particular attention should be given to the horizontal reinforcing steel required at fixed corners between abutment and wing/curtain walls. Since wall deflections are zero near the abutment, curtain walls and cantilever wing walls shall assume an at-rest soil pressure. This increased loading can normally be reduced to an Active soil pressure at a distance (from the corner), equal to the average height of the wall under design. At this distance, the wall deflections are assumed large enough to allow the active state soil pressures to be developed. See *Geotechnical Design Manual* Section 15.4.2.7, "Active, Passive, and At-Rest Pressures."

7.6.1 Traffic Barrier Loads

Traffic barriers shall be rigidly attached to a bridge approach slab that is cantilevered over the top of a wing/curtain wall or Structural Earth wall. The barrier collision load is applied directly to the bridge approach slab. The yield line theory as specified in LRFD-BDS Appendix A13.3 is primarily for traffic barrier on bridge deck slabs and may not be applicable to traffic barrier on less rigid supports, such as retaining walls.

7.6.2 Wing Wall Design

The following wing wall design items should be addressed in the Plans.

1. For strength design of wing walls, vertical loads and moments may be distributed over 10′ of the abutment wall and footing.
2. Footing thickness shall be not less than 1′-6″.
3. Exterior girder top flanges should be located (at the least) inside the curb line at the end pier.
4. For skewed bridges, modify the details on the traffic barrier and approach slab sheet so the expansion joint detailing agree. List appropriate manufacturers and model numbers for the expansion joint system. Generally, a 1″ expansion joint with a 1″ open joint in the barrier is shown in the plans, unless the bridge expansion joint design dictates otherwise.

7.6.3 Wing Wall Detailing

All wing wall reinforcement should be a vertical grid and not follow a tapered bottom of wall. This allows for the steel to be placed in two layers that fits better with abutment reinforcing.

7.7 Footing Design

7.7.1 General Footing Criteria

The provisions given in this section pertain to both spread footings and pile supported footings.

7.7.1.A Minimum Cover and Footing Depth

The Geotechnical Report may specify a minimum footing depth in order to ensure adequate bearing pressure. Stream crossings may require additional cover depth as protection against scour. The State Hydraulic Engineer shall be consulted on this matter. The end slope on the bridge approach fill is usually set at the preliminary plan stage but affects the depth of footings placed in the fill. Figure 7.7.1-1 illustrates footing criteria when setting footing elevations.

Figure 7.7.1-1 Guidelines for Footing Cover and Depth

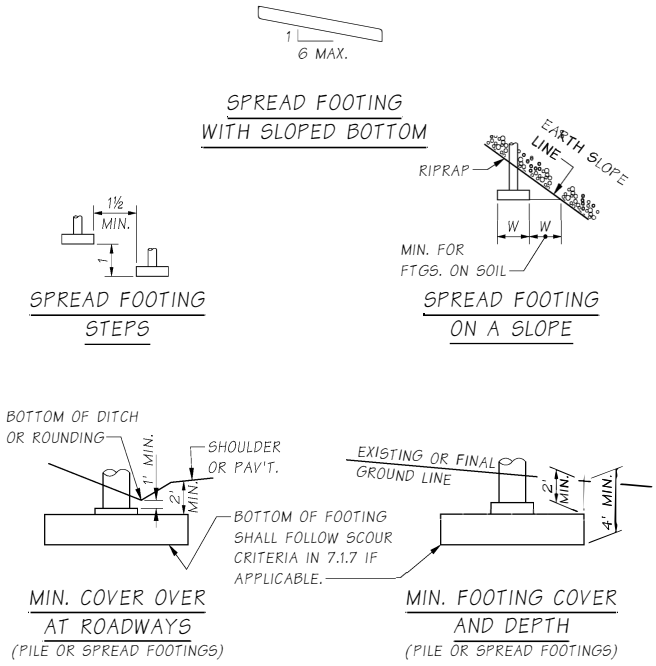

7.7.1.B Pedestals

A pedestal is sometimes used as an extension of the footing in order to provide additional depth for shear near the column. Its purpose is to provide adequate structural depth while saving concrete. For proportions of pedestals, see Figure 7.7.1-2. Since additional forming is required to construct pedestals, careful thought must be given to the tradeoff between the cost of the extra forming involved and the cost of additional footing concrete. Also, additional foundation depth may be needed for footing cover. Whenever a pedestal is used, the plans shall note that a construction joint will be permitted between the pedestal and the footing. This construction joint should be indicated as a construction joint with roughened surface.

Figure 7.7.1-2 Pedestal Dimensions

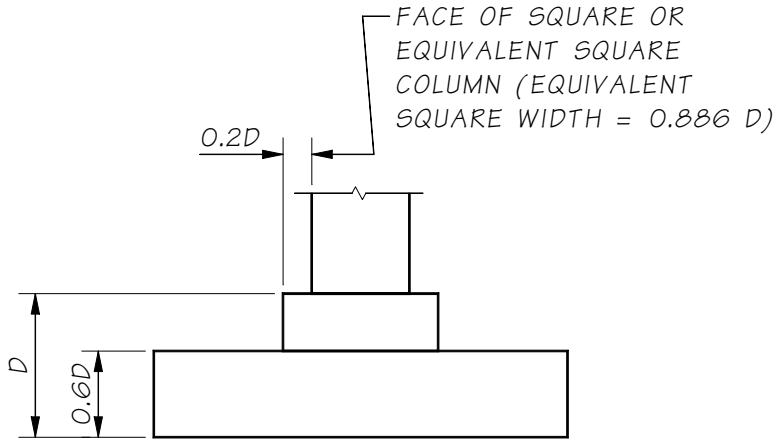

7.7.2 Loads and Load Factors

The following Table 7.7.2-1 is a general application of minimum and maximum load factors as they apply to a generic footing design. Footing design must select the maximum or minimum Load Factors for various modes of failure for the Strength and Extreme Event Limit States.

The dead load includes the load due to structural components and non-structural attachments (*DC*), and the dead load of wearing surfaces and utilities (*DW*). The live load (*LL*) does not include vehicular dynamic load allowance (*IM*).

Designers are to note, if column design uses magnified moments, then footing design must use magnified column moments.

Table 7.7.2-1 Load Factors

Sliding and Overturning, e_o	Bearing Stress (e_c, s_v)
$LL_{min} = 0$	LL_{max}
DC_{min}, DW_{min} for resisting forces, DC_{max}, DW_{max} for causing forces,	DC_{max}, DW_{max} for causing forces DC_{min}, DW_{min} for resisting forces
EV_{min}	EV_{max}
EH_{max}	EH_{max}
LS	*LS*

7.7.3 Geotechnical Report Summary

The State Geotechnical Office will evaluate overall bridge site stability. Slope stability normally applies to steep embankments at the abutment. If stability is in question, a maximum service limit state load will be specified in the report. Bridge design will determine the maximum total service load applied to the embankment. The total load must be less than the load specified in the Geotechnical Report.

Based on the foundations required in the Preliminary Plan and structural information available at this stage, the Report provides the following geotechnical engineering results. For all design limit states, the total factored footing load must be less than the factored resistance.

7.7.3.A Bearing Resistance - Service, Strength, and Extreme Event Limit States

The nominal bearing resistance (q_n) may be increased or reduced based on previous experience for the given soils. The Geotechnical Report will contain the following information:

- Nominal bearing resistance (q_n) for anticipated effective footing widths, which is the same for the strength and extreme event limit states.
- Service bearing resistance (q_{ser}) and amount of assumed settlement.
- Resistance factors for strength and extreme event limit states (ϕ_b).
- Embedment depth requirements or footing elevations to obtain the recommended q_n.

Spread footings supported on SE walls or geosynthetic walls shall be designed with nominal bearing resistances not to exceed 6.0 ksf at service limit states and 9.0 ksf at strength and extreme event limit states. A vertical settlement monitoring program shall be conducted where nominal bearing resistance exceeds 4.0 ksf at service limit states or 7.0 ksf at strength or extreme event limit states. See GDM Section 15.5.3.5 for additional requirements.

7.7.3.B Sliding Resistance - Strength and Extreme Event Limit States

The Geotechnical Report will contain the following information to determine earth loads and the factored sliding resistance ($R_R = \phi R_n$)

- Resistance factors for strength and extreme event limit states (ϕ_τ, ϕ_{ep})
- If passive earth pressure (R_{ep}) is reliably mobilized on a footing: ϕ_f or S_u and σ'_v, and the depth of soil in front of footing that may be considered to provide passive resistance.

7.7.3.C Foundation Springs - Extreme Event Limit States

When a structural evaluation of soil response is required for a bridge analysis, the State Geotechnical Office will determine foundation soil/rock shear modulus and Poisson's ratio (G and μ). These values will typically be determined for shear strain levels of 2 to 0.2 percent, which are typical strain levels for large magnitude earthquakes.

7.7.4 Spread Footing Design

The following section is oriented toward abutment spread footing design. Spread footing designs for intermediate piers or other applications use the same concepts with the appropriate structural analysis. Structural designers should complete all design checks before consulting with the geotechnical engineer about any design problem. There may be several problem criteria that should be addressed in the solution.

7.7.4.A Abutment Spread Footing Force Diagram

Figures 7.7.4-1 and 7.7.4-2 diagram the forces that act on abutment footings. Each limit state design check will require calculation of a reaction (R) and the location (X_o) or eccentricity (e_o). The ultimate soil passive resistance (Q_{ep}) at the toe is determined by the geotechnical engineer and is project specific.

Figure 7.7.4-1 Cantilever (End Diaphragm) Abutment Force Diagram

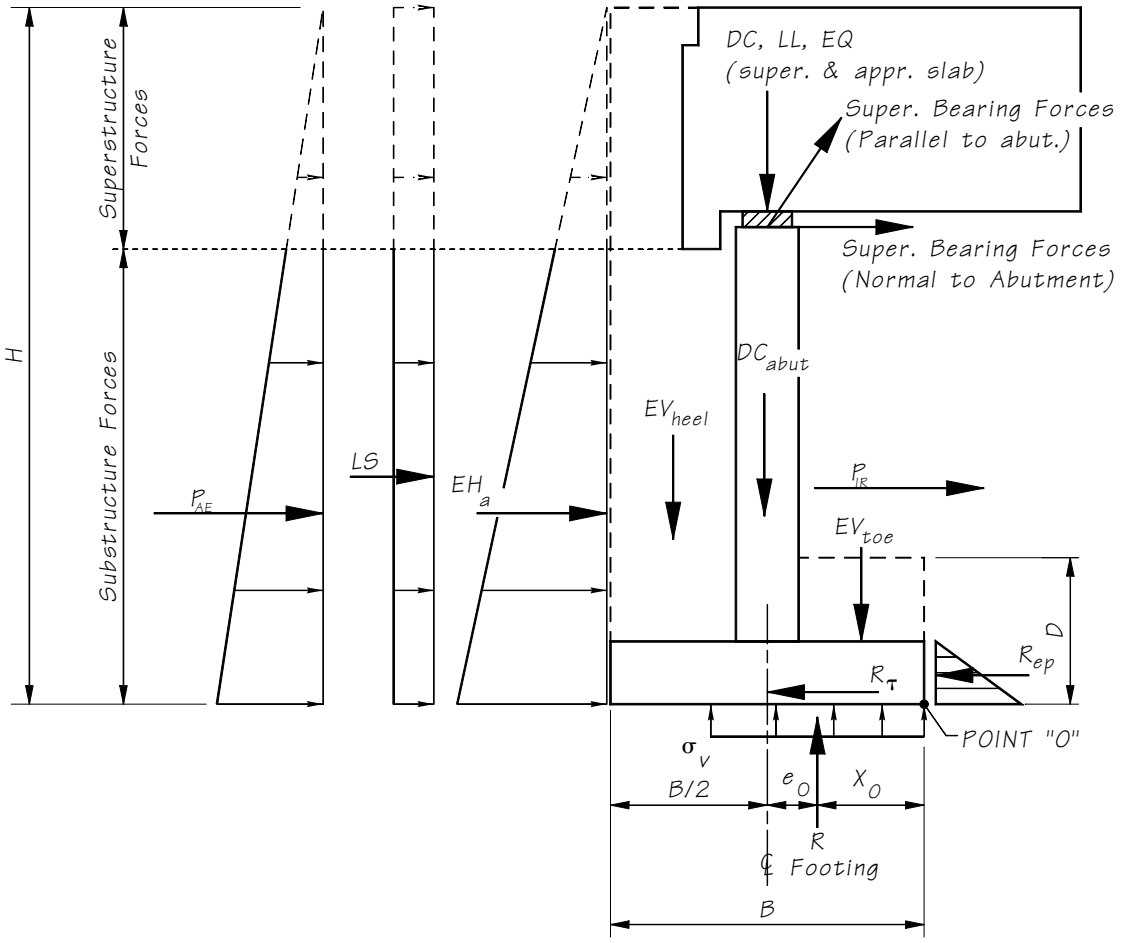

Figure 7.7.4-2 Definition and Location of Forces and Moments for L-Abutments and Interior Footings

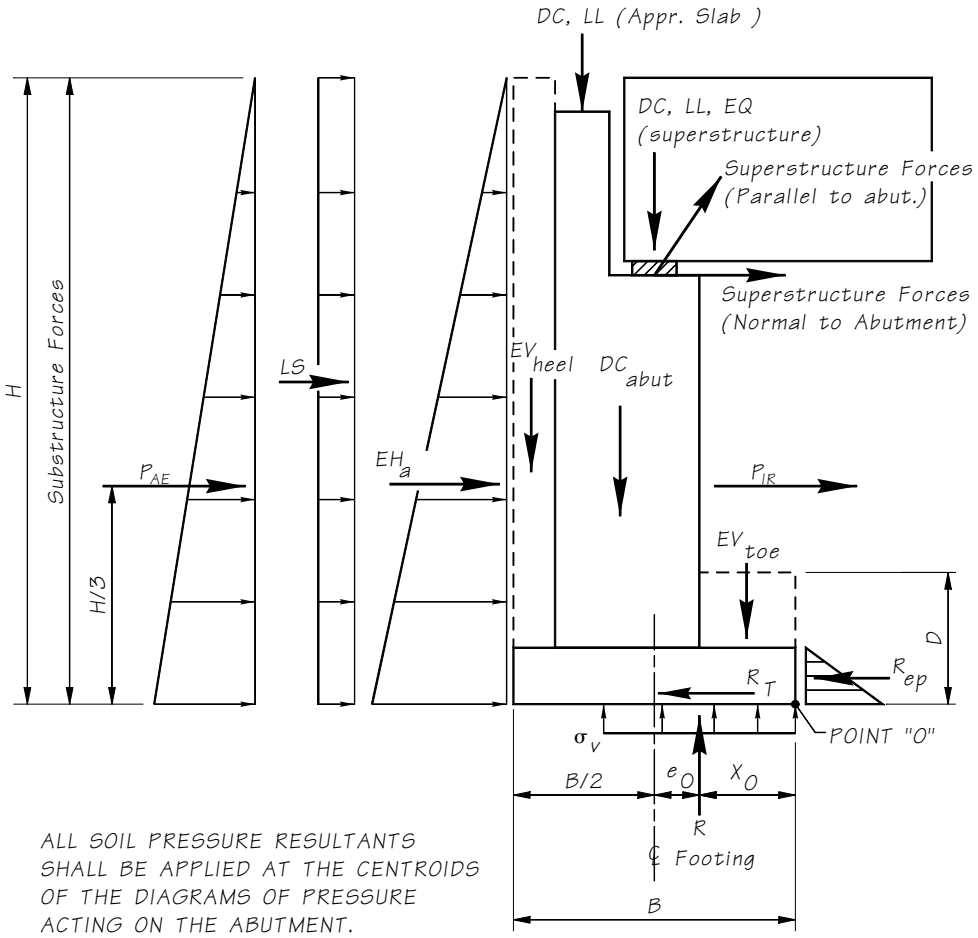

7.7.4.B Bearing Stress

For geotechnical and structural footings design, the bearing stress calculation assumes a uniform bearing pressure distribution. For footing designs on rock, the bearing stress is based on a triangular or trapezoidal bearing pressure distribution. The procedure to calculate bearing stress is summarized in the following outline. See Abutment Spread Footing Force Diagrams for typical loads and eccentricity.

Step 1: Calculate the Resultant force (R_{str}), location (Xo_{str}) and eccentricity for Strength (e_{str}).

Xo_{str} = (factored moments about the footing base)/(factored vertical loads)

Step 2A: For Footings on Soil:

Calculate the maximum soil stress (σ_{str}) based on a uniform pressure distribution. Note that this calculation method applies in both directions for biaxially loaded footings. See LRFD-BDS Section 10.6.3.1.5 for guidance on biaxial loading. The maximum footing pressure on soil with a uniform distribution is:

$\sigma_{str} = R/B' = R/2Xo = R/(B\text{-}2e)$, where B' is the effective footing width.

Step 2B: For Footings on Rock:

If the reaction is outside the middle ⅓ of the base, use a triangular distribution.

σ_{str} max = 2*R*/3 *Xo*, where "*R*" is the factored limit state reaction.

If the reaction is within the middle ⅓ of the base, use a trapezoidal distribution.

σ_{str} max = *R*/*B* (1+ 6 *e*/B)

In addition, WSDOT limits the maximum stress (*P*/*A*) applied to rock due to vertical loads only. This is because the rock stiffness approaches infinity relative to the footing concrete. The maximum width of uniform stress is limited to *C*+2*D* as shown in Figure 7.7.4-3.

Step 3: Compare the factored bearing stress (σ_{str}) to the factored bearing resistance ($\phi b_c q_n$) of the soil or rock. The factored bearing stress must be less than or equal to the factored bearing resistance.

$\sigma_{str} \leq \phi b_c q_n$

Step 4: Repeat steps 1 thru 3 for the Extreme Event limit state. Calculate Xo_{ext}, e_{ext}, and σ_{ext} using Extreme Event factors and compare the factored stress to the factored bearing ($\phi_b q_n$).

Figure 7.7.4-3 Footings on Rock

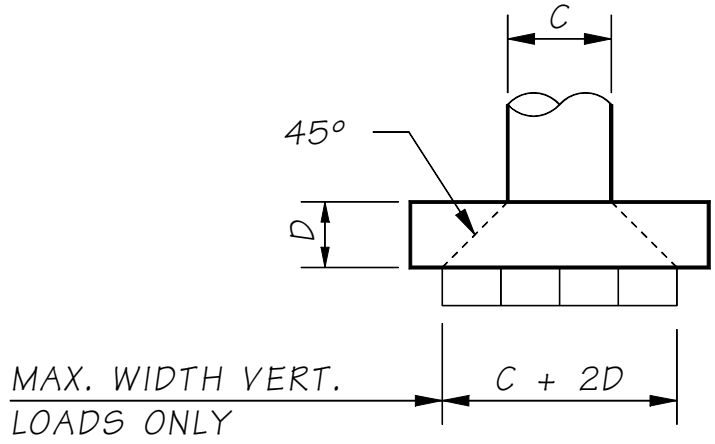

7.7.4.C Failure By Sliding

The factored sliding resistance (Q_R) is comprised of a frictional component ($\varphi_\tau Q_\tau$) and the State Geotechnical Office may allow a passive earth pressure component ($\phi_{ep} Q_{ep}$). The designer shall calculate Q_R based on the soil properties specified in the Geotechnical Report. The frictional component acts along the base of the footing, and the passive component acts on the vertical face of a buried footing element. The factored sliding resistance shall be greater than or equal to the factored horizontal applied loads.

$$Q_R = \phi_T Q_T + \phi_{ep} Q_{ep} \qquad 7.7.4\text{-}1$$

The Strength Limit State ϕ_τ and ϕ_{ep} are provided in the Geotechnical Report or LRFD-BDS Section 10.5.5.2.2-1. The Extreme Event Limit State Q_τ and ϕ_{ep} are generally equal to 1.0.

Where:

Q_τ = $(R)\tan\delta$
$\tan\delta$ = Coefficient of friction between the footing base and the soil
$\tan\delta$ = $\tan\phi$ for cast-in-place concrete against soil
$\tan\delta$ = $(0.8)\tan\phi$ for precast concrete
R = Vertical force – Minimum Strength and Extreme Event factors are used to calculate R
ϕ = angle of internal friction for soil

7.7.4.D Overturning Stability

Calculate the locations of the overturning reaction (R) for strength and extreme event limit states. Minimum load factors are applied to forces and moments resisting overturning. Maximum load factors are applied to forces and moments causing overturning. Note that for footings subjected to biaxial loading, the following eccentricity requirements apply in both directions.

See LRFD-BDS Sections 11.6.3.3 (Strength Limit State) and 11.6.5 (Extreme Event Limit State) for the appropriate requirements for the location of the overturning reaction (R).

7.7.4.E Footing Settlement

The service limit state bearing resistance (q_{ser}) will be a settlement-limited value, typically 1″.

Bearing Stress = $\sigma_{ser} < \phi q_{ser}$ = Factored nominal bearing

Where, q_{ser} is the unfactored service limit state bearing resistance and ϕ is the service resistance factor. In general, the resistance factor (ϕ) shall be equal to 1.0.

For immediate settlement (not time dependent), both permanent dead load and live load should be considered for sizing footings for the service limit state. For long-term settlement (on clays), only the permanent dead loads should be considered.

If the structural analysis yields a bearing stress (σ_{ser}) greater than the bearing resistance, then the footing must be re-evaluated. The first step would be to increase the footing size to meet bearing resistance. If this leads to a solution, recheck layout criteria and inform the geotechnical engineer the footing size has increased. If the footing size cannot be increased, consult the geotechnical engineer for other solutions.

7.7.4.F Concrete Design

Footing design shall be in accordance with LRFD-BDS Section 5.13.3 for footings and the general concrete design of LRFD-BDS Chapter 5. The following Figure 7.7.4-4 illustrates the modes of failure checked in the footing concrete design.

Figure 7.7.4-4 Spread Footing Modes of Failure

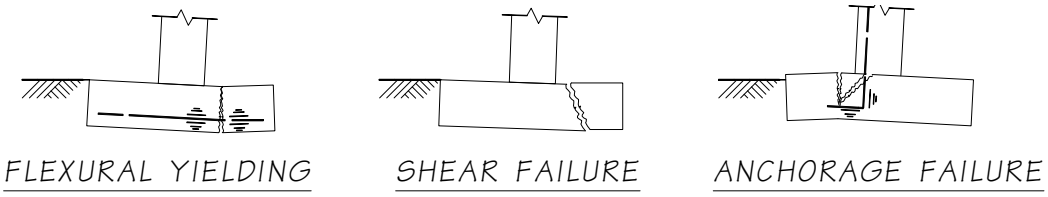

7.7.4.F.1 *Footing Thickness and Shear*

The minimum footing thickness shall be 1′-0″. The minimum plan dimension shall be 4′-0″. Footing thickness may be governed by the development length of the column dowels, or by concrete shear requirements (with or without reinforcement). If concrete shear governs the thickness, it is the engineer's judgment, based on economics, as to whether to use a thick footing unreinforced for shear or a thinner footing with shear reinforcement. Generally, shear reinforcement should be avoided but not at excessive cost in concrete, excavation, and shoring requirements. Where stirrups are required, place the first stirrup at $d/2$ from the face of the column or pedestal. For large footings, consider discontinuing the stirrups at the point where $vu = vc$.

7.7.4.F.2 *Footing Force Distribution*

The maximum internal forces in the footing shall be determined based on a triangular or trapezoidal bearing pressure distribution, see LRFD-BDS Section 10.6.5.

7.7.4.F.3 *Vertical Reinforcement (Column or Wall)*

Vertical reinforcement shall be developed into the footing to adequately transfer loads to the footing. Vertical rebar shall be bent 90° and extend to the top of the bottom mat of footing reinforcement. This facilitates placement and minimizes footing thickness. Bars in tension shall be developed using 1.25 *Ld*. Bars in compression shall develop a length of 1.25 *Ld*, prior to the bend. Where bars are not fully stressed, lengths may be reduced in proportion, but shall not be less than ¾ *Ld*.

The concrete strength used to compute development length of the bar in the footing shall be the strength of the concrete in the footing. The concrete strength to be used to compute the section strength at the interface between footing and a column concrete shall be that of the column concrete. This is allowed because of the confinement effect of the wider footing.

7.7.4.F.4 *Bottom Reinforcement*

Concrete design shall be in accordance with LRFD-BDS. Reinforcement shall not be less than #6 bars at 12″ centers to account for uneven soil conditions and shrinkage stresses.

7.7.4.F.5 *Top Reinforcement*

Top reinforcement shall be used in any case where tension forces in the top of the footing are developed. Where columns and bearing walls are connected to the superstructure, sufficient reinforcement shall be provided in the tops of footings to carry the weight of the footing and overburden assuming zero pressure under the footing. This is the uplift earthquake condition described under "Superstructure Loads." This assumes that the strength of the connection to the superstructure will carry such load. Where the connection to the superstructure will not support the weight of the substructure and overburden, the strength of the connection may be used as the limiting value for determining top reinforcement. For these conditions, the LRFD-BDS requirement for minimum percentage of reinforcement will be waived. Regardless of whether or not the columns and bearing walls are connected to the superstructure, a mat of reinforcement shall normally be provided at the tops of footings. On short stub abutment walls (4′ from girder seat to top of footing), these bars may be omitted. In this case, any tension at the top of the footing, due to the weight of the small overburden, must be taken by the concrete in tension.

Top reinforcement for column or wall footings designed for two-way action shall not be less than #6 bars at 12″ centers, in each direction while top reinforcement for bearing wall footings designed for one-way action shall not be less than #5 bars at 12″ centers in each direction.

7.7.4.F.6 *Shrinkage and Temperature Reinforcement*

For footings greater than 3 feet thick, temperature and shrinkage reinforcing shall be provided on the side faces in accordance with LRFD-BDS Section 5.10.6.

7.7.5 Pile-Supported Footing Design

The minimum footing thickness shall be 2′-0″. The minimum plan dimension shall be 4′-0″. Footing thickness may be governed by the development length of the column dowels, or by concrete shear requirements. The use of strut and tie modeling is recommended for the design of all pile caps and pile footings. Figure 7.7.5-1 identifies the modes of failure that should be investigated for general pile cap/footing design.

Figure 7.7.5-1 Pile Footing Modes of Failure

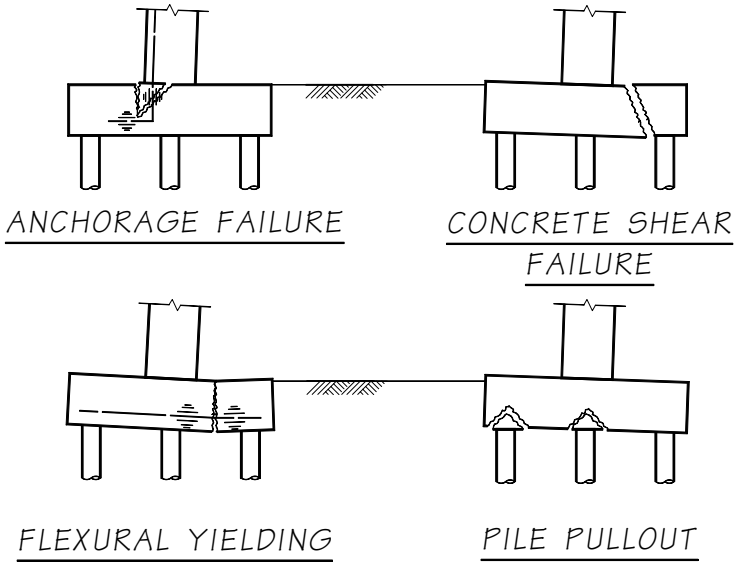

7.7.5.A Pile Embedment, Clearance, and Rebar Mat Location

All piles shall have an embedment in the concrete sufficient to resist moment, shear, and axial loads. The steel casing for cast-in-place concrete piles with reinforcing extending into footings shall be embedded a minimum of 6″. The clearance for the bottom mat of footing reinforcement shall be 1½″ between the reinforcing and the top of the casing for CIP pile footings. See Figure 7.7.5-2 for the minimum pile clearance to the edge of footing.

Figure 7.7.5-2 Pile Embedment and Reinforcing Placement

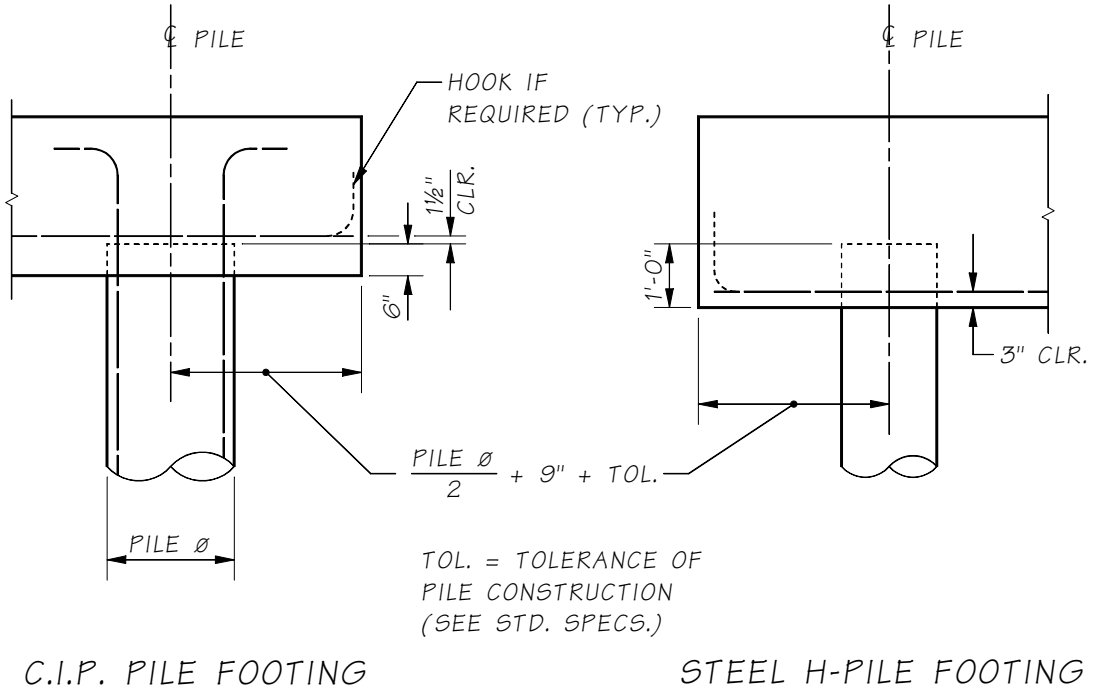

7.7.5.B Concrete Design

In determining the proportion of pile load to be used for calculation of shear stress on the footing, any pile with its center 6″ or more outside the critical section shall be taken as fully acting on that section. Any pile with its center 6″ or more inside the critical section shall be taken as not acting for that section. For locations in between, the pile load acting shall be proportioned between these two extremes. The critical section shall be taken as the effective shear depth (d_v) as defined in LRFD-BDS Section 5.8.2.9. The distance from the column/wall face to the allowable construction centerline of pile (design location plus or minus the tolerance) shall be used to determine the design moment of the footing. The strut and tie design method should be used where appropriate.

7.8 Shafts

7.8.1 Axial Resistance

The factored axial resistance of the shaft (R) is generally composed of two parts: the nominal end bearing (R_p) and the nominal skin friction (R_s). The general formula is as follows, where φ is the limit state resistance factor.

$$R = \varphi_p R_p + \varphi_s R_s \quad (7.8.1\text{-}1)$$

The total factored shaft loading must be less than the factored axial resistance. R_p and R_s are treated as independent quantities although research has shown that the end bearing and skin friction resistance have some interdependence. R_p and R_s shown as a function of depth will be stated in the Geotechnical Report for the bridge. End bearing resistance, R_p, is typically provided by the State Geotechnical Office as a net value. Thus, the effective weight of the shaft can be reduced by the total weight of the excavated soil when examining compressive loads and resistances.

Shafts with permanent casing, installed by drilling and not driven, require reduced side resistance specified by the geotechnical engineer. Side resistance shall be limited to 10 percent of the nominal (ultimate) side resistance unless otherwise approved by the State Geotechnical Engineer. This is due to the overcutting required when installing permanent casing.

The designer shall consider all applicable factored load combination limit states and shaft resistances when determining shaft axial resistance and demand and shaft tip elevations. For some shaft designs, liquefiable soils, scour conditions and/or downdrag forces may need to be considered. Determining which limit states to include these conditions or forces can be complex. The State Hydraulics Office and the State Geotechnical Office shall be consulted to ensure overly and/or under conservative load combinations and resistances are not being considered. Open and frequent communication is essential during design.

The LRFD-BDS include water loads, *WA*, in Extreme Event I limit states. The probability of a design earthquake occurring in the presence of the maximum scour event is low. However, the requirements for scour, either at Extreme II or other limit states, needs to be included in the design. See scour policy segments of the BDM and Hydraulics' manual for specifics. When scour is included with Extreme Event I load combinations, the skin resistance of the soil, 50 percent of the scour depth for the design flood, shall be deducted from the resistance of the shaft. The loss of skin resistance for the full scour depth for the design flood shall be considered when checking axial resistance of the shaft for all strength and service limit states. The loss of skin resistance for the full scour depth of the check flood shall be considered when checking the axial resistance of the shaft for Extreme Event II limit states. It should be noted that scour does not produce a load effect on the structure but changes the geometry of the bridge pier and available soil resistance so that effects of other loads are amplified. The engineer may also need to consider scour effects on piers that are currently outside of the ordinary high water zones due to potential migration of rivers or streams during flood events. The State Hydraulics Office will provide guidance for these rare cases.

Downdrag forces may also need to be considered in some designs. Downdrag forces are most often caused by the placement of fill adjacent to shafts, which causes consolidation and settlement of underlying soils. This situation is applicable to service and strength limit states. Downdrag forces can also be caused by liquefaction-induced settlement caused by a seismic event. Pore water pressure builds up in liquefiable soils during ground shaking. And as pore water pressure dissipates, the soil layer(s) may settle, causing downdrag forces on the shaft to develop. These liquefaction induced downdrag forces are only considered in the Extreme Event I limit state. However, downdrag induced by consolidation settlement is never combined with downdrag forces induced by liquefaction, but are only considered separately in their applicable limit states.

The downdrag is treated as a load applied to the shaft foundations. The settling soil, whether it is caused by consolidation under soil stresses (caused, for example, by the placement of fill), or caused by liquefaction, creates a downward acting shear force on the foundations. This shear force is essentially the skin friction acting on the shaft, but reversed in direction by the settlement. This means that the skin friction along the length of the shaft within the zone of soil that is contributing to downdrag is no longer available for resisting downward axial forces and must not be included with the soil resistance available to resist the total downward axial (i.e., compression) loads acting on the foundation.

In general, the geotechnical engineer will provide shaft soil resistance plots as a function of depth that includes skin friction along the full length of the shaft. Therefore, when using those plots to estimate the shaft foundation depth required to resist the axial compressive foundation loads, this “skin friction lost” due to downdrag must be subtracted from the resistance indicated in the geotechnical shaft resistance plots, and the downdrag load per shaft must be added to the other axial compression loads acting on the shaft.

Similarly, if scour is an issue that must be considered in the design of the foundation, with regard to axial resistance (both in compression and in uplift), the skin friction lost due to removal of the soil within the scour depth must be subtracted from the shaft axial resistance plots provided by the geotechnical engineer. If there is any doubt as to whether or not this skin friction lost must be subtracted from the shaft resistance plots, it is important to contact the geotechnical engineer for clarification on this issue. Note that if both scour and downdrag forces must be considered, it is likely that the downdrag forces will be reduced by the scour. The two conditions combined as well as independently shall be considered when determining the controlling load case, and assistance from the geotechnical engineer should be obtained.

The *Geotechnical Design Manual* Chapters 6, 8, and 23, should be consulted for additional explanation regarding these issues.

Following is a summary of potential load combination limit states that shall be checked if scour effects, liquefiable soils and/or downdrag forces are included in the design. The Geotechnical Report will provide the appropriate resistance factors to use with each limit state.

7.8.1.A Embankment Consolidation Downdrag

Embankment downdrag from fill or the presence of compressible material below the foundations; no liquefaction.

Checks:

1. Include embankment induced downdrag loads with all Strength and Service Limit States. Do not include with Extreme Limit States. Use maximum load factor unless checking an uplift case, where the minimum shall be used. Subtract the skin friction lost within the downdrag zone from the shaft axial resistance plots provided by the geotechnical engineer.

7.8.1.B Seismic Liquefaction Downdrag

Liquefiable soils with post-earthquake downdrag forces. No embankment downdrag.

If embankment downdrag is present, it shall not be included with liquefaction-induced downdrag therefore it would not be included in Check 3 below.

Checks:

1. **Extreme Event I Limit State**

   Use static soil resistances (no loss of resistance due to liquefaction) and no downdrag forces. Use a live load factor of 0.5.

2. **Extreme Event I Limit State**

   Use reduced soil resistance due to liquefaction and no downdrag forces. Use a live load factor of 0.5. The soils in the liquefied zone will not provide the static skin friction resistance but will in most cases have a reduced resistance that will be provided by the geotechnical engineer.

3. **Extreme Event I Limit State**

   Post liquefaction. Include downdrag forces, a live load factor of 0.5 and a reduced post-liquefaction soil resistance provided by the geotechnical engineer. Do not include seismic inertia forces from the structure since it is a post-earthquake check. There will be no skin resistance in the post-earthquake liquefied zone. Therefore, subtract the skin friction lost within the downdrag zone from the shaft axial resistance plots provided by the geotechnical engineer.

7.8.1.C Scour

Scour shall be evaluated for the design flood and check flood events. The shaft shall be designed so that shaft penetration below the scour of the applicable flood event provides enough axial resistance to satisfy demands. Since, in general, the geotechnical engineer will provide shaft resistance plots that include the skin friction within the scour zone, the skin friction lost will need to be subtracted from the axial resistance plots provided to determine the shaft resistance acting below the scour depth. A special case would include scour with Extreme Event I limit states without liquefiable soils and downdrag. It is overly conservative to include liquefied soil induced downdrag and scour from the same soil layer with the Extreme Event I limit states. The State Hydraulics Office and the geotechnical engineer will need to be consulted for this special case.

Checks:

1. **Service and Strength Limit States**

   Subtract the skin friction lost within the scour depth (i.e., 100 percent of the scour depth for the design flood) from the shaft axial resistance plots provided by the geotechnical engineer, to estimate the shaft depth required to resist all service and strength limit demands.

2. **Extreme Event II Limit State**

   Subtract the skin friction lost within the scour depth (i.e., 100 percent of the scour depth for the check flood event) from the shaft axial resistance plots provided by the geotechnical engineer, to estimate the shaft depth required to resist all Extreme Event II limit demands. Use a live load factor of 0.5. Do not include ice load, *IC*, vessel collision force, *CV*, and vehicular collision force, *CT*.

3. **Extreme Event II Limit State**

   Subtract the skin friction lost within the scour depth (in this case only 50 percent of the scour depth for the design flood event) from the shaft axial resistance plots provided by the geotechnical engineer, to estimate the shaft depth required to resist all Extreme Event II limit demands. Use a live load factor of 0.5. In this case, include ice load, *IC*, vessel collision force, *CV*, and vehicular collision force, *CT*.

4. **Extreme Event I Limit State (special case - no liquefaction)**

   Subtract the skin friction lost within the scour depth (i.e., in this case 50 percent of the scour depth for the design flood) from the shaft axial resistance plots provided by the geotechnical engineer, to estimate the shaft depth required to resist the Extreme Event I limit state demands.

7.8.1.D Axial Resistance Group Reduction Factors

The group reduction factors for axial resistance of shafts for the strength and extreme event limit states shall be taken as shown in Table 7.8.1-1 unless otherwise specified by the geotechnical engineer. These reduction factors presume that good shaft installation practices are used to minimize or eliminate the relaxation of the soil between shafts and caving. If this cannot be adequately controlled due to difficult soils conditions or for other constructability reasons, lower group reduction factors shall be used as recommended by the geotechnical engineer. Alternatively, steps could be required during and/or after shaft construction to restore the soil to its original condition. The geotechnical engineer will provide these recommendations, which could include but is not limited to, pressure grouting of the tip, grouting along side of the shaft or full length casing.

Table 7.8.1-1 Group Reduction Factors for Axial Resistance of Shafts

Soil Type	Shaft Group Configuration	Shaft Center-to-Center Spacing	Special Conditions	Group Reduction factor, η
Cohesionless (Sands, gravels, etc.)	Single row	2*D*		0.90
		2.5*D*		0.95
		3*D* or more		1.0
	Multiple row	2.5*D**		0.67
		3*D*		0.80
		4*D* or more		1.0
	Single and multiple rows	2*D* or more	Shaft group cap in intimate contact with ground consisting of medium-dense or denser soil	1.0
	Single and multiple rows	2*D* or more	Full depth casing is used and augering ahead of the casing is not allowed, or pressure grouting is used along the shaft sides to restore lateral stress losses caused by shaft installation, and the shaft tip is pressure grouted	1.0
Cohesive (Clays, clayey sands, and glacially overridden, well-graded soils such as glacial till)	Single or multiple rows	2*D* or more		1.0

*Minimum spacing for multiple row configurations.

These group reduction factors apply to both strength and extreme event limit states. For the service limit state the influence of the group on settlement as shall be determined from the LRFD-BDS and the *Geotechnical Design Manual* M 46-03.

7.8.2 Structural Design and Detailing

Standard Specifications Section 6-19 should be reviewed as part of the design of shafts. The structural design of shafts is similar to column design. The following guidelines shall be followed:

1. For shaft foundation supporting columns in any SDC C or D, the shaft nominal moment capacity shall be designed to resist 1.25 times the moment demand generated in the shaft by the overstrength column plastic hinge moment at the base of the column.
2. Concrete Class 5000P shall be specified for the entire length of the shaft for wet or dry conditions of placement.
3. When shafts are constructed in water, the concrete specified for the casing shoring seal shall be Class 4000W.
4. The assumed concrete compressive strength may be taken as $f'c$ for structural design of shafts. For seismic design, the expected compressive strength may be increased by 1.3 in accordance with LRFD-SGS Section 8.4.4.

5. The presence of permanent steel casing shall be taken into account in the shaft design (i.e. for stiffness, and etc.), but the structural resistance of permanent steel casing shall not be considered for structural design of shafts unless the design conforms to Section 7.10.

6. Cover requirements vary depending on the shaft diameter and shall be as specified below:
   - Diameter less than or equal to 3′-0″ = 3″
   - Diameter greater than 3′-0″ and less than 5′-0″ = 4″
   - Diameter greater than or equal to 5′-0″ = 6″

   Standard Specifications Section 6-19 lists exceptions to these cover requirements when permanent slip casings are used in column splice zones.

7. In general, shaft reinforcing shall be detailed to minimize congestion, facilitate concrete placement by tremie, and maximize consolidation of concrete.

8. The clear spacing between spirals and hoops shall not be less than 6″ or more than 9″, with the following exception. The clear spacing between spirals or hoops may be reduced in the splice zone in single column/single shaft connections because shaft concrete may be vibrated in this area, negating the need for larger openings to facilitate good flow of concrete through the reinforcing cage.

9. The volumetric ratio and spacing requirements of the LRFD-SGS Specifications for confinement need not be met. The top of shafts in typical WSDOT single column/single shaft connections remains elastic under seismic loads due to the larger shaft diameter (as compared to the column). Therefore this requirement does not need to be met.

10. Shaft transverse reinforcement may be constructed as hoops or spirals, or a combination of the two. Spiral reinforcement is preferred for shaft transverse reinforcement. However, if #6 spirals at 6″ (excluding the exception in Section 7.8.2.H) clear do not satisfy the shear design, circular hoops may be used. Circular hoops in shafts up to #9 bars may be lap spliced using a welded lap detail. Note: Welded lap splices for spirals are currently acceptable under the AWS D1.4 up to bar size #6. Recent testing has been performed by WSDOT for bar sizes #7 through #9. All tests achieved full tensile capacity (including 125 percent of yield strength.) Therefore, #7 through #9 welded lap spliced hoops are acceptable to use provided they are not located in possible plastic hinge regions. Circular hoops may also be fabricated using a manual direct butt weld, resistance butt weld, or mechanical coupler. Weld splicing of hoops for shafts shall be completed prior to assembly of the shaft steel reinforcing cage. Refer to Section 7.3.5.F for additional discussion on circular hoops. Mechanical couplers may be considered provided cover and clearance requirements are accounted for in the shaft details. When welded hoops or mechanical couplers are used, the plans shall show a staggered pattern around the perimeter of the shaft so that no two adjacent welded splices or couplers are located at the same location.

11. In single column/single shaft configurations, the spacing of the shaft transverse reinforcement in the splice zone shall meet the requirements of the following equation, which comes from the TRAC Report titled, *"Noncontact Lap Splices in Bridge Column-Shaft Connections"*:

$$S_{max} = \frac{2\pi A_{sh} f_{ytr} l_s}{k A_l f_{ul}} \quad (7.8.2\text{-}1)$$

Where:

S_{max} = Spacing of transverse shaft reinforcement
A_{sh} = Area of shaft spiral or transverse reinforcement bar
f_{ytr} = Yield strength of shaft transverse reinforcement
l_s = Standard splice length of the column reinforcement, per LRFD-BDS.
A_l = Total area of longitudinal column reinforcement
f_{ul} = Specified minimum tensile strength of column longitudinal reinforcement (ksi), 90 ksi for A615 and 80 ksi for A706
k = Factor representing the ratio of column tensile reinforcement to total column reinforcement at the nominal resistance. In the upper half of the splice zone, k = 1.0. In the lower half of the splice zone, this ratio could be determined from the column moment-curvature analysis using computer programs XTRACT or CSiBridge. To simplify this process, k = 0.5 could safely be used in most applications

The additional lateral reinforcement in the upper half of the oversized pile shafts is required to control cracking in this region. The volumetric ratio of transverse reinforcement throughout the splice zone shall not be less that provided by a #6 spiral with a 6″ pitch.

12. Longitudinal reinforcement shall be provided for the full length of shafts. The minimum longitudinal reinforcement in the splice zone of single column/single shaft connections shall be the larger of 0.75 percent A_g of the shaft or 1.0 percent A_g of the attached column. The minimum longitudinal reinforcement beyond the splice zone shall be 0.75 percent A_g of the shaft. The minimum longitudinal reinforcement in shafts without single column/single shaft connections shall be 0.75 percent A_g of the shaft.
13. The clear spacing between longitudinal reinforcement shall not be less than 6″ or more than 9″. If a shaft design is unable to meet this minimum requirement, a larger diameter shaft shall be considered. Alternatively, Grade 80 reinforcing steel could be considered. Where 3-bar bundles are used, the plans shall allow the contractor to construct the cage with two of the three bars located towards the center of the shaft. This allows the contractor flexibility in constructing the cage, but it reduces the flexural resistance of the shaft.
14. Longitudinal reinforcing in shafts should be straight with no hooks to facilitate concrete placement and removal of casing. If hooks are necessary to develop moment at the top of a shaft (in a shaft cap situation) the hooks should be turned toward the center of the shaft while leaving enough opening to allow concrete placement with a tremie.
15. Locations of longitudinal splices shall be shown in the contract plans. Mechanical splices shall be placed in low stress regions and staggered 2′-0″ minimum.
16. Use of two concentric circular rebar cages shall be avoided.
17. Resistance factors for Strength Limit States shall be per the latest LRFD-BDS. Resistance factors for Extreme Event Limit States shall be per the latest LRFD-SGS. The resistance factor for shear shall conform to the LRFD-BDS.

18. The axial load along the shaft varies due to the side friction. It is considered conservative, however, to design the shaft for the full axial load plus the maximum moment. The entire shaft normally is then reinforced for this axial load and moment.

19. Access tubes for Crosshole Sonic Log (CSL) testing or thermal wires for Thermal Integrity Profiling (TIP) shall be provided in all shafts per *Standard Specifications* Section 6-19.3(6)B.

20. Shafts shall be specified in English dimensions and shall be specified in sizes that do not preclude any drilling method. Shafts shall be specified in whole foot increments except as allowed here. The tolerances in *Standard Specifications* Section 6-19 accommodate metric casing sizes and/or oversized English casing sizes. Oversized English casings are often used so that tooling for drilling the shafts, which are the nominal English diameter, will fit inside the casing. There are a few exceptions, which will be discussed below. See Table 7.8.2-1 for casing sizes and tolerances.

Table 7.8.2-1 Shaft Casing Geometric Tolerances

Column A	Column B	Column C	Column D	Column E	Column F	Column G	Column H
Nominal (Outside) English Casing Diameter		*Maximum Increase in Casing Inside Diameter	*Maximum Decrease in Casing Inside Diameter	Maximum English Casing Diameter	Nominal (Outside) Metric Casing Diameter		
Feet	Inches	Inches	Inches	Inches	Meters	Feet	Inches
12.0	144	6	0	150	3.73	12.24	146.85
11.0	132	6	0	138	3.43	11.25	135.0
10.0	120	6	2	126	3.00	9.84#	118.11
9.5	114	6	0	120	3.00	9.84	118.11
9.0	108	6	0	114	2.80	9.19	110.23
8.0	96	6	0	102	2.50	8.20	98.42
7.0	84	6	0	90	2.20	7.22	86.61
6.5	78	6	0	84	2.00	6.56	78.74
6.0	72	6	0	78	2.00	6.56	78.74
5.5	66	6	0	72			
5.0	60	12	1	72	1.5	4.92#	59.05
4.5	54	12	0	66	1.50	4.92	59.05
4.0 **	48	12	0	60	1.5	4.92	59.05
4.0**	48	12	1	60	1.2	3.94#	47.28
3.0	36	12	0	48	1.00	3.28	39.37
3.0	36	12	0	48	0.915	3.00	36.02
2.5	30	12	0	42			
2.0	24	12	0	36	0.70	2.30	27.56

*Check *Standard Specifications* Section 6-19.

**Construction tolerances would allow either 1.2 or 1.5 meter casing to be used.

Designer shall check that undersize shaft meets the design demands.

As seen in Table 7.8.2-1, construction tolerances shown in Column "C" allow shaft diameters to be increased up to 12″ for shafts 5′-0″ diameter or less and increased up to 6″ for shafts greater than 5′-0″ in diameter. In most cases these construction tolerances allow either metric or English casings to be used for installation of the shafts.

There are a few exceptions to these typical tolerances. These exceptions are as follows:

A. **4.0′ Diameter Shafts**
The tolerances in Columns "C" and "D" of Table 7.8.2-1 allow either an oversized 4.92′ diameter shaft or an undersized 3.94′ shaft to be constructed. The reinforcement cage shall be sized to provide a minimum of 3″ of cover to the undersized diameter.

B. **5.0′ Diameter Shafts**
The tolerances in Columns "C" and "D" of Table 7.8.2-1 allow either an oversized 6.0′ diameter shaft or an undersized 4.92′ diameter shaft to be constructed. The reinforcement cage shall be sized to provide a minimum of 4″ of cover to the undersized diameter.

C. **10.0′ Diameter Shafts**
The tolerances in Columns "C" and "D" of Table 7.8.2-1 allow either an oversized 10.5′ diameter shaft or an undersized 9.84′ diameter shaft to be constructed. The reinforcement cage shall be sized to provide a minimum of 4″ of cover to the undersized diameter.

For all shaft diameters, the designer should bracket the design so that all possible shaft diameters, when considering the construction tolerances, will satisfy the design demands. The minimum shaft diameter (nominal or undersized) shall be used for design of the flexural and shear reinforcement.

The nominal English shaft diameter shall be specified on the plans. When requesting shaft resistance charts from the geotechnical engineer, the designer should request charts for the nominal English shaft diameter.

21. Shafts supporting a single column shall be sized to allow for construction tolerances, as illustrated in Figure 7.8.2-1.

Figure 7.8.2-1 Shaft to Column Construction Tolerances

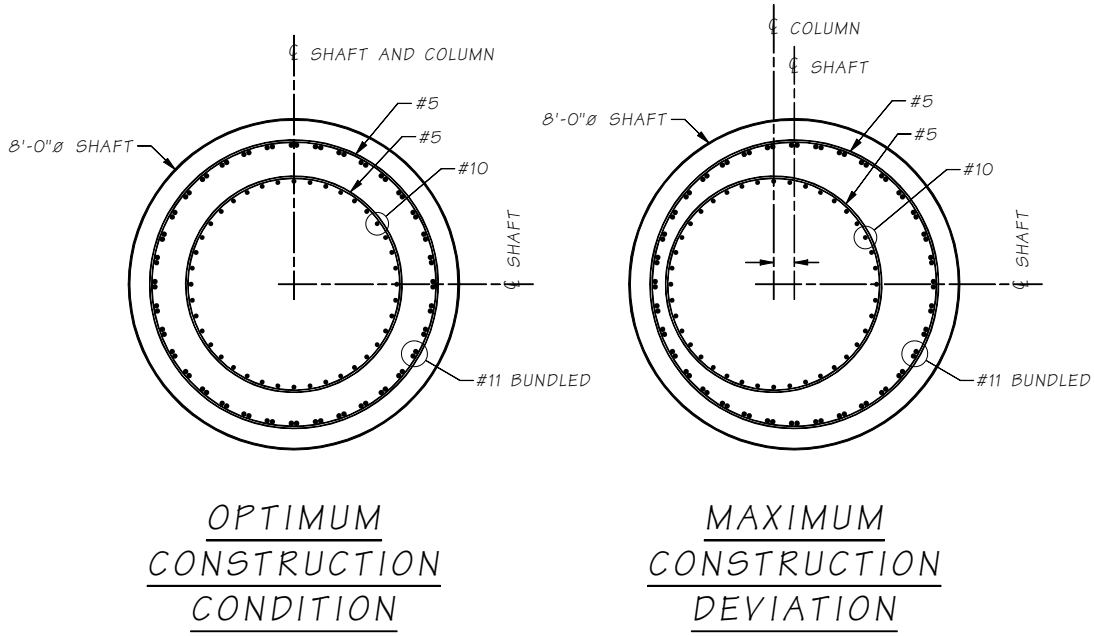

The shaft diameter shall be based on the maximum column diameter allowed by the following equation,

Maximum Column Diameter = Shaft Diameter – 2*(Shaft Concrete Cover) – 2*(Shaft Horizontal Construction Tolerance) – 2*(Shaft Cage Thickness)

The shaft horizontal construction tolerance and shaft concrete cover shall conform to *Standard Specifications* Section 6-19.

If the column diameter used in design is larger than the maximum allowed for a given shaft size, as defined by the equation above, a larger shaft diameter shall be used.

The shaft diameter specified here should not be confused with the desirable casing shoring diameter discussed below.

22. Casing shoring shall be provided for all shafts below grade or waterline. However, casing shoring requirements are different for shafts in shallow excavations and deep excavations. Shafts in deep excavations require a larger diameter casing shoring to allow access to the top of the shaft for column form placement and removal. The top of shafts in shallow excavations (approximately 4′ or less) can be accessed from the ground line above, by reaching in or by “glory-holing”, and therefore do not require larger diameter casing shoring, see Figure 7.8.2-2. The designer shall locate the top of in-water shafts above the water line when it simplifies construction. Where there is a strong design benefit to lowering the top of in-water shafts, they may be located below the groundline/mudline.

Figure 7.8.2-2 Shaft Casing Details

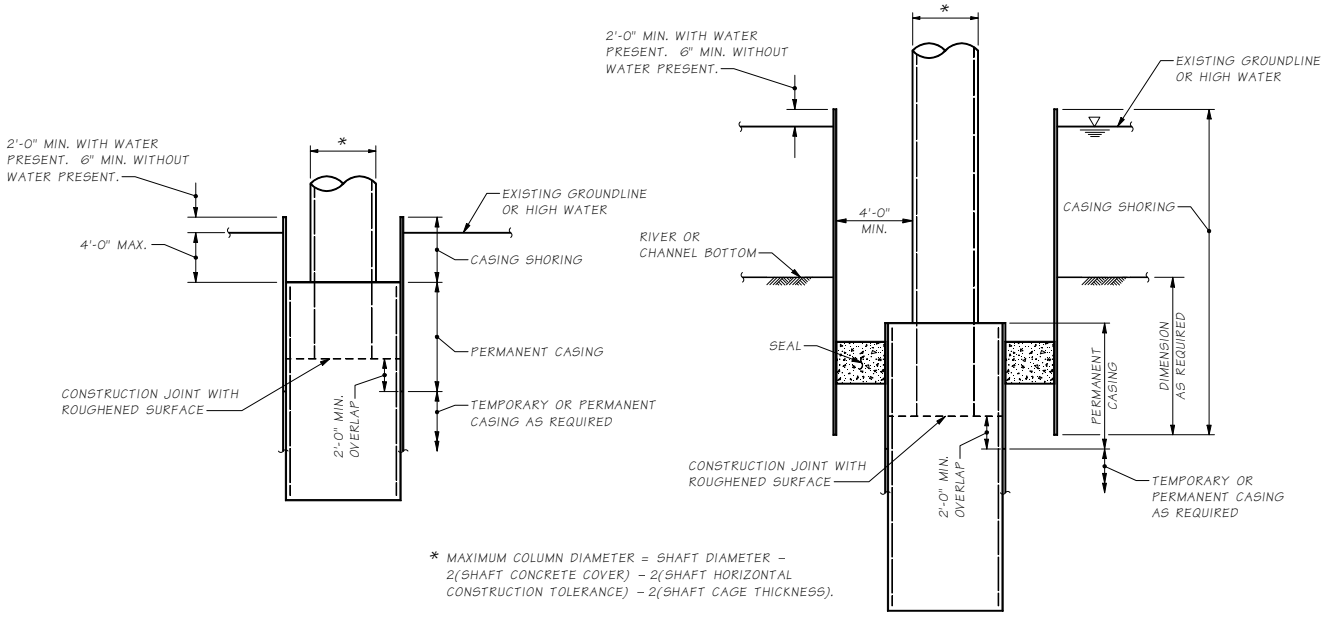

23. Changes in shaft diameters due to construction tolerances shall not result in a reinforcing steel cage diameter different from the diameter shown in the plans (plan shaft diameter minus concrete cover). For example, metric casing diameters used in lieu of English casing diameters shall only result in an increase in concrete cover, except as noted below for single column/single shaft connections requiring slip casings. There are also exceptions for 4′-0″, 5′-0″, and 10′-0″ diameter shafts, see Table 7.8.2-1.

24. Rotator and Oscillator drilling methods typically use a slip casing for permanent casing in single column/single shaft connections, as shown in Figure 7.8.2-3.

Figure 7.8.2-3 10'-0" Ø Shaft Constructed With The Oscillator Method

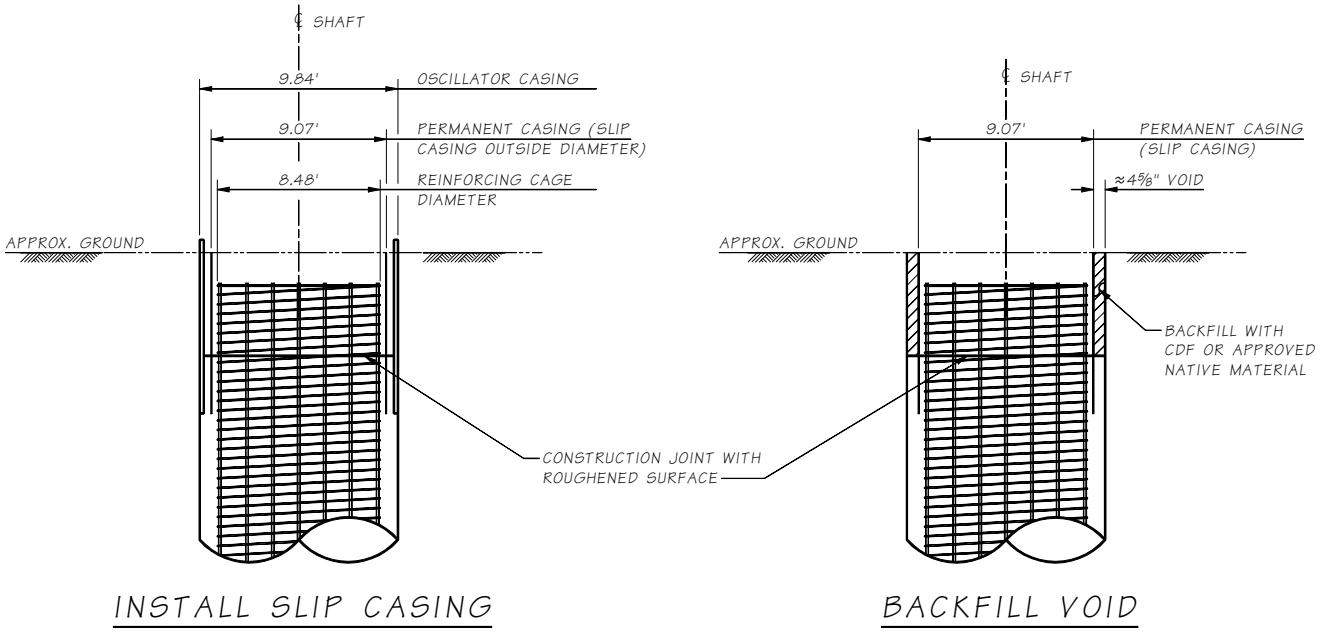

The use of the slip casing typically requires a modification to the reinforcing cage diameter. This should be considered during the structural design of the shaft. The slip casing also results in less concrete cover than the area of the shaft below the slip casing. See Table 7.8.2-2 for expected reinforcing cage diameters and clear cover. Shafts shall be designed such that the reduced concrete cover is acceptable in this area because the casing is permanent. A minimum of 3″ of concrete cover is achievable in this area for shafts 4′-0″diameter and larger and 1½″ of cover for shafts less than 4′-0″. These concrete cover requirements shall be kept as a minimum requirement. The reduction in strength (compared to the area below the slip casing) associated with the reduced shaft diameter that results from the slip casing is bounded within the shaft analysis and design methods prescribed here and elsewhere. Therefore the reduction in strength in this area can be ignored.

25. Reinforcing bar centralizers shall be detailed in the plans as shown in Figure 7.8.2-4.

Table 7.8.2-2 Expected Reinforcing Cage Diameters and Clear Cover

Nominal (Outside) Metric Casing Diameter		Maximum (Outside) Reinf. Cage Diameter to Accommodate Metric Casing[1]		Inside Diameter of Metric Casing[2]	Nominal (Outside) Metric Slip Casing Diameter[3]			Cage Clearance Below Slip Casing	Cage Clearance at Slip Casing[4]
Meters	Feet	Inches	Feet	Inches	Inches	Feet	Meters	Inches	Inches
3.73	12.24	130.52	10.88	140.52	137.52	11.46	3.49	8.16	3.0
3.43	11.25	118.71	9.89	128.71	125.71	10.48	3.19	8.16	3.0
3.00	9.84	101.81	8.48	111.84	108.81	9.07	2.76	8.15	3.0
2.80	9.19	95.51	7.96	105.51	102.51	8.54	2.60	7.36	3.0
2.50	8.20	83.70	6.98	93.70	90.70	7.56	2.30	7.36	3.0
2.20	7.22	71.89	5.99	81.89	78.89	6.57	2.00	7.36	3.0
2.00	6.56	64.02	5.34	74.02	71.02	5.92	1.80	7.36	3.0
1.50	4.92	45.12	3.76	55.12	52.12	4.34	1.32	6.97	3.0
1.2	3.94	34.08	2.84	44.09	41.09	3.42	1.044	6.57	3.0
1.00	3.28	30.22	2.52	36.22	34.22	2.85	0.87	4.57	1.5
0.92	3.00	26.87	2.24	32.87	30.87	2.57	0.78	4.57	1.5

Notes:

1. Provided by Malcolm Drilling. Assumes minimum of 5″ clearance to inside of oscillator casing on 4′ and larger and uses 3″ of clearance on smaller than 4′ (1.2 meters).
2. Provided by Malcolm Drilling.
3. Provided by Malcolm Drilling. Slip casing is 3″ smaller than inside diameter of temporary casing from 1.2 meters to 3 meters. 1 meter on down is 2″ smaller in diameter.
4. Slip casing is typically ⅜″ to ½″ thick (provided by Malcolm Drilling). Cage clearance assumes ½″ thick casing.

Figure 7.8.2-4 Centralizer Detail

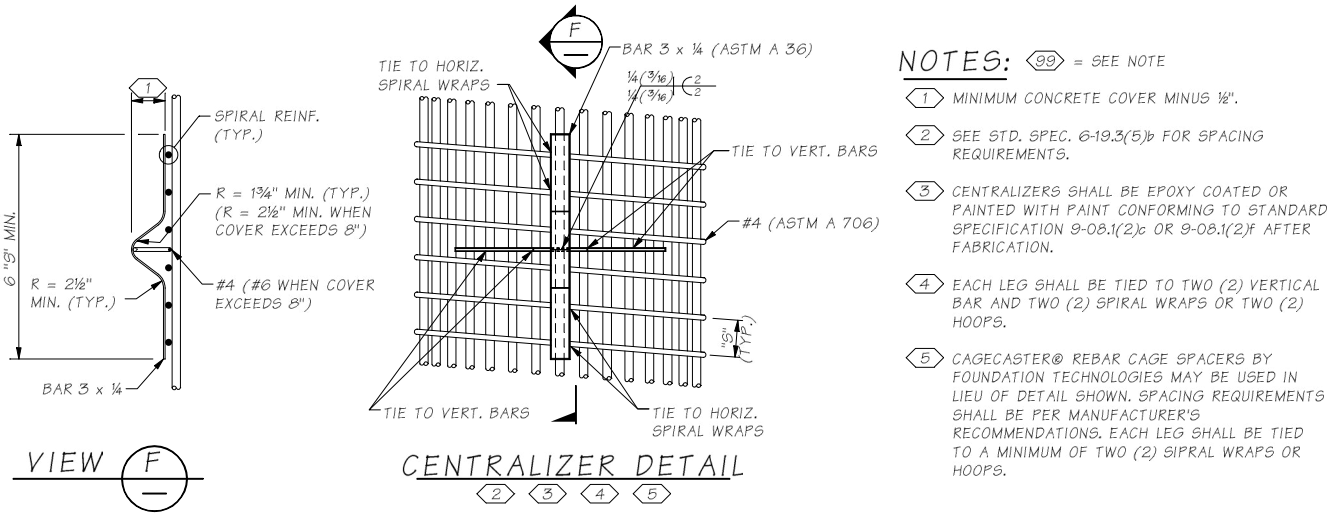

7.9 Piles and Piling

7.9.1 Pile Types

This section describes the piling used by the Bridge and Structures Office and their applications. In general, piles should not be used where spread footings can be used.

7.9.1.A Cast-in-place Concrete Piles

Cast-in-place (CIP) concrete piles utilize driven steel pipe casings, which are then filled with reinforcing steel and concrete. The steel pile is generally ignored for strength considerations but may be considered for stiffness. Refer to Section 7.10 Concrete Filled Tubes where the steel pile and concrete are utilized as composite section. The bottom of the casing is typically capped with a suitable flat plate for driving. However, the State Geotechnical Office may specify special tips when difficult driving is expected.

The State Geotechnical Office will determine the minimum wall thickness of the steel pipe casings based on driving conditions. However, the *Standard Specifications* require the contractor to provide a wall thickness that will prevent damage during driving.

7.9.1.B Structural Steel Pipe Piles

Structural steel pipe piles shall follow the current Special Provisions in addition to the requirements in the *Standard Specifications*. Additionally, the design wall thickness shall be reduced for corrosion over a 75-year minimum design life. Minimum corrosion rates are specified in Section 6.7.1.

7.9.1.C Steel H Piles

Steel piles have been used where there are hard layers that must be penetrated in order to reach an adequate point bearing stratum. H piling can act efficiently as friction piling due to its large surface area. Do not use steel H piling where the soil consists of only moderately dense material. In such conditions, it may be difficult to develop the friction capacity of the H piles and excessive pile length may result.

Steel H Pile design thickness shall be reduced for corrosion over a 75-year minimum design life as specified in Section 6.7.1.

7.9.1.D Timber Piles

Timber piles may be untreated or treated and are used only for temporary applications. Untreated piles may be used where the entire pile will be permanently below the water line. Where composite piles are used, the splice must be located below the permanent water table. If doubt exists as to the location of the permanent water table, treated timber piles shall be used.

Where dense material exists, consideration should be given to allowing jetting (with loss of uplift capacity), use of shoes, or use of other pile types.

7.9.1.E Steel Sheet Piles

Steel sheet piles are typically used for cofferdams and shoring and cribbing, but are usually not made a part of permanent construction.

Timber piles and auger cast piles shall not be used for WSDOT permanent bridge structures. These types of piles may be used for temporary bridges and other non-bridge

applications subject to approval by the State Foundation Engineer and the State Bridge Design Engineer.

Micropiles shall not be used for new bridge foundations unless approved by the State Bridge Design Engineer. This type of pile may be used for foundation strengthening of existing bridges, temporary bridges and other non-bridge applications subject to approval by the State Geotechnical Engineer and the State Bridge Design Engineer.

Precast, prestressed concrete piles shall only be used in SDC A or B unless approved by the State Bridge Design Engineer. Their use shall be limited to locations where uncertainties in pile length are minimal.

Steel H Piles shall only be used at bridge abutments unless approved by the State Bridge Design Engineer. The connections into the cap shall develop the strength required for design and to prevent pull out during uplift. This could be done with welded end plate or welded rebar connection details into the pile cap similar to those for CFSTs in Section 7.10.3.

Battered piles shall not be used for bridge foundations to resist lateral loads unless approved by the State Bridge Design Engineer and State Foundation Engineer.

In seismic applications there is a need for bi-directional demands. Steel H piles have proven to have little bending resistance for the purposes of resisting seismic load while circular CIP piles provide consistent capacities in all directions. Also, CIP pile casing is generally available in a full range of casing diameters. CIP piles are easily inspected after driving to ensure the quality of the finished pile prior to placing reinforcing steel and concrete.

Precast, prestressed concrete piles, and timber piles are difficult to splice and for establishing moment connections into the pile cap.

Micropiles have little bending resistance for the purposes of resisting lateral loads in seismic applications.

7.9.2 Single Pile Axial Resistance

The Geotechnical Report will provide the nominal axial resistance (R_n) and resistance factor (ϕ) for pile design. The factored pile load ($P_{U\ pile}$) must be less than the factored resistance, ϕR_n, specified in the Geotechnical Report.

Pile axial loading ($P_{U\ pile}$) due to loads applied to a pile cap are determined as follows:

$$\left(P_{U\ pile}\right) = \left(P_{U\ pile\ group}\right)/N + M_{U\ group}\ C/I_{group} + \gamma DD \qquad (7.9.2\text{-}1)$$

Where:

$M_{U\ group}$ = Factored moment applied to the pile group. This includes eccentric *LL*, *DC*, centrifugal force (*CE*), etc. Generally, the dynamic load allowance (*IM*) does not apply.

C = Distance from the centroid of the pile group to the center of the pile under consideration.

I_{group} = Moment of inertia of the pile group

N = Number of piles in the pile group

$P_{U\ pile\ group}$ = Factored axial load to the pile group

DD = Downdrag force specified in the Geotechnical Report

γ = Load factor specified in the Geotechnical Report

Pile selfweight is typically neglected. As shown above, downdrag forces are treated as load to the pile when designing for axial resistance. However, it should not be included in the structural analysis of the bridge.

See Section 7.8.1 "Axial Resistance" of shafts for discussion on load combinations when considering liquefaction, scour and on downdrag effects. These guidelines are also applicable to piles.

7.9.3 Block Failure

For the strength and extreme event limit states, if the soil is characterized as cohesive, the pile group resistance shall also be checked for the potential for a "block" failure, as described in LRFD-BDS Section 10.7.3.9. This check requires interaction between the designer and the geotechnical engineer. The check is performed by the geotechnical engineer based on loads provided by the designer. If a block failure appears likely, the pile group size shall be increased so that a block failure is prevented.

7.9.4 Pile Uplift

Piles may be designed for uplift if specified in the Geotechnical Report. In general, pile construction methods that require preboring, jetting, or spudding will reduce uplift capacity.

7.9.5 Pile Spacing

Pile spacing determination is typically determined collaboratively with the geotechnical engineer. The *Geotechnical Design Manual* M 46-03 specifies a minimum center-to-center spacing of 30″ or 2.5 pile diameters. However, center-to-center spacings of less than 2.5 pile diameters may be considered on a case-by-case basis.

7.9.6 Structural Design and Detailing of CIP Concrete Piles

The structural design and detailing of CIP Concrete piles is similar to column design with the following guidelines:

1. Concrete Class 5000P Concrete shall be specified for CIP concrete piles. The top 10′ of concrete in the pile is to be vibrated. Use 1.0 f'_c for the structural design.
2. For structural design, the reinforcement alone shall be designed to resist the total moment throughout the length of pile without considering strength of the steel casing. The minimum reinforcement shall be 0.75 percent A_g for SDC B, C, and D and shall be provided for the full length of the pile unless approved by the State Bridge Design Engineer. Minimum clearance between longitudinal bars shall meet the requirements in Appendix 5.1-A2.
3. If the pile to footing/cap connection is not a plastic hinge zone longitudinal reinforcement need only extend above the pile into the footing/cap a distance equal to 1.0 l_d (tension). If the pile to footing/cap connection is a plastic hinge zone longitudinal reinforcement shall extend above the pile into the footing/cap a distance equal to 1.25 l_d.

4. Since the diameter of the concrete portion of the pile is dependent on the steel casing thickness, the as-built diameter will not be known during design (since the casing thickness is determined by the contractor). As such, a casing thickness must be assumed for design. The structural engineer should work closely with the Geotechnical Engineer to determine a suitable casing thickness to assume based on expected driving conditions. A pile drivability analysis may be required for this. Otherwise, the following can typically be assumed:
   - ¼″ for piles less than 14″ in diameter
   - ⅜″ for piles 14″ to 18″ in diameter
   - ½″ for larger piles
5. Steel casing for 24″ diameter and smaller CIP piling should be designated by nominal diameter rather than inside diameter. *Standard Specifications* Section 9-10.5 requires steel casings to meet ASTM A252 Grade 2, which is purchased by nominal diameter (outside diameter) and wall thickness. A pile thickness should not be stated in the plans. As stated previously, the *Standard Specifications* require the contractor to determine the pile casing thickness required for driving.
6. Transverse spiral reinforcement shall be designed to resist the maximum shear in the pile. Avoid a spiral pitch of less than 3″. The minimum spiral shall be a #4 bar at 9″ pitch. If the pile to footing/cap connection is not a plastic hinge zone the volumetric requirements of LRFD-BDS Section 5.11.4.5 need not be met.
7. Resistance factors for Strength Limit States shall be per the latest LRFD-BDS. Resistance factors for Extreme Event Limit States shall be per the latest LRFD-SGS.
8. Piles are typically assumed to be continuously supported. Normally, the soil surrounding a foundation element provides sufficient bracing against a buckling failure. Piles that are driven through very weak soils should be designed for reduced lateral support, using information from the State Geotechnical Office as appropriate. LRFD-BDS 10.7.3.13.4 may be used to estimate the column length for buckling. Piles driven through firm material normally can be considered fully supported for column action (buckling not critical) below the ground.
9. The axial load along the pile varies due to side friction. It is considered conservative, however, to design the pile for the full axial load plus the maximum moment. The entire pile is then typically reinforced for this axial load and moment.
10. In all cases of uplift, the connection between the pile and the footing must be carefully designed and detailed. The bond between the pile and the seal may be considered as contributing to the uplift resistance. This bond value shall be limited to 10 psi. The pile must be adequate to carry tension throughout its length. For example, a timber pile with a splice sleeve could not be used.

7.9.7 Pile Splices

Pile splices shall be avoided where possible. If splices may be required in timber piling, a splice shall be detailed on the plans. Splices between treated and untreated timber shall always be located below the permanent water line.

7.9.8 Pile Lateral Design

The strength limit state for lateral resistance is only structural, though the determination of pile fixity is the result of soil-structure interaction. A failure of the soil does not occur; the soil will continue to displace at constant or slightly increasing resistance. Failure occurs when the pile reaches the structural limit state and this limit state is reached, in the general case, when the nominal combined bending, shear, and axial resistance is reached.

Piles resist horizontal forces by a combination of internal strength and the passive pressure resistance of the surrounding soil. The capacity of the pile to carry horizontal loads should be investigated using a soil/structural analysis. For more information on modeling individual piles or pile groups, see Section 7.2, Foundation Modeling and Section 7.2.6 Lateral Analysis of Piles and Shafts.

7.9.9 Battered Piles

As stated previously, battered piles shall not be used to resist lateral loads for new bridge foundations. Where battered piles are used, the maximum batter shall be 4½:12. Piles with batters in excess of this become very difficult to drive and the bearing values become difficult to predict. Ensure that battered piling do not intersect piling from adjacent footings within the maximum length of the piles.

7.9.10 Pile Tip Elevations and Quantities

Pile length quantities provided to PS&E are based on the minimum tip elevation given in the Geotechnical Report or the expected depth required for axial design, whichever is greater. If the minimum tip elevation given in the Geotechnical Report is greater than the design tip elevation, overdriving the pile will be required. The Geotechnical Engineer shall be contacted to evaluate driving conditions. A General Provision will be required in the Special Provisions to alert the contractor of the additional effort needed to drive these piles.

If a minimum tip elevation is required, it shall be shown in the contract plans. Minimum pile tip elevations provided in the Geotechnical Report may need to be adjusted to lower elevations depending on the results of the lateral, axial, and uplift analysis. If adjustment in the minimum tip elevations is necessary, or if the pile diameter needed is different than what was assumed for the Geotechnical Report, the State Geotechnical Office must be informed so that pile drivability can be re-evaluated.

Note that lateral loading and uplift requirements may influence possibly increase) the number of piles required in the group if the capacity available at a reasonable minimum tip elevation is not adequate. This will depend on the soil conditions and the loading requirements. For example, if the upper soil is very soft or will liquefy, making the minimum tip elevation deeper is unlikely to improve the lateral response of the piles enough to be adequate. Adding more piles to the group or using a larger pile diameter to increase the pile stiffness may be the only solution.

7.9.11 Plan Pile Resistance

The Bridge Plan General Notes shall list the Ultimate Bearing Capacity (Nominal Driving Resistance, R_{ndr}) in tons. This information is used by the contractor to determine the pile casing thickness and size the hammer to drive the piles. The resistance for several piers may be presented in a table as shown in Figure 7.9.11-1. If overdriving the piles is required to reach the minimum tip elevation, the estimated amount of overdriving (tons) shall be specified in the Special Provisions.

Figure 7.9.11-1 Pile Ultimate Bearing Capacity Table

THE PILES SHALL BE DRIVEN TO AN ULTIMATE BEARING CAPACITY AS FOLLOWS:	
PIER NO.	**ULTIMATE BEARING CAPACITY (TONS)**
1	====
4	====

The total factored pile axial loading must be less than ϕR_n for the pile design. Designers should note that the driving resistance might be greater than the design loading for liquefied soil conditions. This is not an overdriving condition. This is due to the resistance liquefied soils being ignored for design, but included in the driving criteria to place the piles.

7.10 Concrete-Filled Steel Tubes

7.10.1 Scope

This section shall be taken to supersede LRFD-BDS and LRFD-SGS requirements for concrete-filled steel tubes (or pipes). The use of concrete-filled steel tubes (CFST) and reinforced concrete-filled steel tubes (RCFST) requires approval from the State Bridge Design Engineer when used as a ductile element as part of an earthquake-resisting system.

CFST and RCFST have been shown to offer strength and stiffness beyond a conventional reinforced concrete (RC) member. Recent research has shown that CFST members can sustain large cyclic drifts with minimal damage. The design methods herein regarding concrete-filled steel tubes are largely based on study, testing and recommendations compiled by the University of Washington (UW).

The concrete for CFST members tested at the UW was a low-shrinkage, self-consolidating concrete. The nominal concrete strengths were 6 ksi and 10 ksi. This represents structural concrete with a minimum specified strength of 4 ksi, and an expected strength 25 percent to 50 percent larger.

Prior CALTRANS and ARMY research programs studied fully restrained connections for CFST pier to foundation connections. Two of those connections are further discussed in this section and are shown in Figure 7.10.1-1. The first CFST-to-cap connection type involves an annular ring attached to the top of the CFST, and is partially embedded into the pile cap. This anchored connection resists flexural loading from the pile through strutting action to the bottom of the pile cap (resulting from the portion of tube of the CFST that is in tension) and the top of the pile cap (resulting from the portion of tube of the CFST column that in compression). Tests show this connection is both simple to construct and fully effective in transferring flexure. The current ACI procedure (ACI 318-2011) was recommended by the UW as a conservative approach to design against punching shear in this type of connection.

The second CFST-to-cap connection type requires a circular reinforcing cage with headed longitudinal bars that extend into the concrete cap. The CFST is discontinued just below the cap. This connection type is beneficial for plastic design in that it allows the designer some flexibility in the plastic demand that must be resisted by the cap. Refer to Section 7.10.4 for further discussion.

Transition connections between RC shafts and CFST shafts have not been tested, but considerable analysis has been performed at the UW. Models have been developed to predict the strength of RCFST members, and this RCFST behavior may be used to provide increased strength over a significant length of the pile relative to conventional RC construction. Overstrength factors for capacity protection design of adjacent members and joint shear design at connections were not addressed in the research.

Figure 7.10.1-1 CFST Column-to-Cap Connections

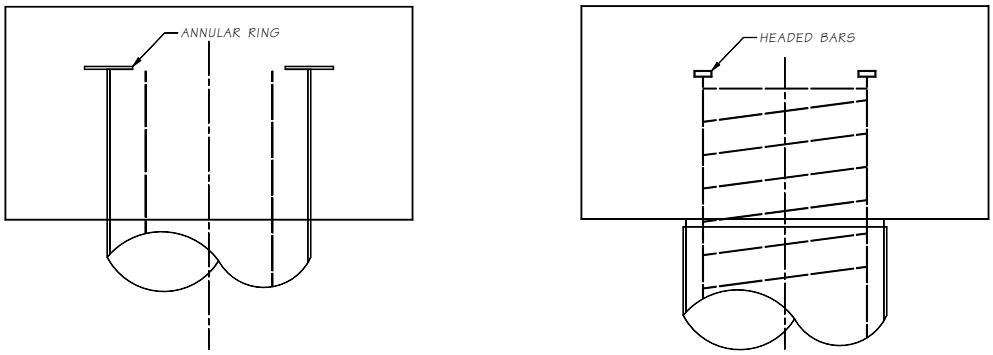

7.10.2 Design Requirements

7.10.2.A Materials

1. The concrete for CFST and RCFST shall be class 5000P.
2. Steel tubes shall conform to one of the following:
   A. API 5L Grade X42 or X52 for longitudinal seam welded or helical (spiral) seam submerged-arc welded tube
   B. ASTM A 252 Grade 2 or 3 for longitudinal seam welded or helical (spiral) seam submerged-arc welded tube
   C. ASTM A 572 or ASTM A 588 for longitudinal seam welded tube
3. When a CFST or RCFST will be used as an earthquake resisting element and is expected to develop a plastic hinge, the steel tubes shall be fabricated from steel meeting the mechanical and chemistry requirements of AASHTO M 270 GR 50 (ASTM A 709 GR 50) regardless of fabrication method.
4. For capacity protected members at the extreme event limit state, expected material properties may be used to determine the expected nominal moment capacity. The expected yield strength, F_{ye}, for steel tubes shall be taken as $1.1F_y$.
5. Welding for fabrication and splicing of the CFST or RCFST requires weld procedure (WPS) qualification including charpy-v-notch testing. WPS qualification is required whether the CFST or RCFST is used as an earthquake resisting element or is designed to remain elastic. Refer to the WSDOT Special Provisions and Section 7.10.7 – *Construction Requirements* for additional information. The Specials shall be included in any contract using CFST or RCFSTs.

7.10.2.B Limit States

For strength limit states, the resistance factors for axial load effects on CFST and RCFST shall be taken per LRFD-BDS for tension- and compression- controlled reinforced concrete sections. The resistance factor for flexure shall be taken as 0.9. The resistance factor for shear shall be taken as 0.85. For extreme event limit states, resistance factors shall be taken as 1.0.

7.10.2.C General Dimensions

The minimum tube wall thickness shall not be taken less than ⅜ inch at the time of installation. To develop the full plastic capacity of CFST or RCFST members, it is necessary to ensure that local buckling does not occur prior to development of the strength of the tube. Therefore the following *D/t* limits are recommended:

1. For members subjected to elastic forces:

$$\frac{D}{t} \leq 0.22\frac{E}{F_y} \quad (7.10.2\text{-}1)$$

2. For members subjected to plastic forces::

$$\frac{D}{t} \leq 0.15\frac{E}{F_y} \quad (7.10.2\text{-}2)$$

Where D is the outside diameter of the tube (in.), and t is the wall thickness of the tube (in.). Both D and t shall be adjusted for corrosion as defined in Section H.

7.10.2.D Stiffness

The effective stiffness, EI_{eff}, of circular CFST, as defined in Equation 7.10.2-3, shall be used to evaluate deflections, deformations, buckling resistance, and moment magnification. The effective stiffness factor, *C*', is defined in Equation 7.10.2-4.

$$EI_{eff} = E_s I_S + C' E_c I_c \quad (7.10.2\text{-}3)$$

$$C' = 0.15 + \frac{P}{P_0} + \frac{A_s}{A_s + A_c} \leq 0.9 \quad (7.10.2\text{-}4)$$

P_0 is the nominal compressive resistance (crushing load) without moment as defined in Equation 7.10.2-5, P is the factored axial load effect, and A_s is the combined area of the steel tube and steel reinforcing.

$$P_0 = 0.95 f_c' A_c + F_{y,st} A_{st} \quad (7.10.2\text{-}5)$$

A_{st} is the area of the steel tube.

7.10.2.E Flexure and Axial Resistance

The flexural strength of CFST and RCFST members may be determined using the plastic stress distribution method (PSDM). The appropriate limit state stresses and geometry is shown in Figure 7.10.2-1.

Solutions for the interaction diagrams can be developed using parametric equations for *P*(*y*) and *M*(*y*) where *y* is the distance from the centroid to the neutral axis. A positive value of *P* is a net compressive force. *M* and *y* are positive with the sign convention shown in Figure 7.10.2-1. The parameter *y* varies between plus and minus r_i, where r_i is the radius of the concrete core.

Stress is assumed to be plastically developed over the following regions of the section:

Figure 7.10.2-1 Plastic Stress Distribution Method

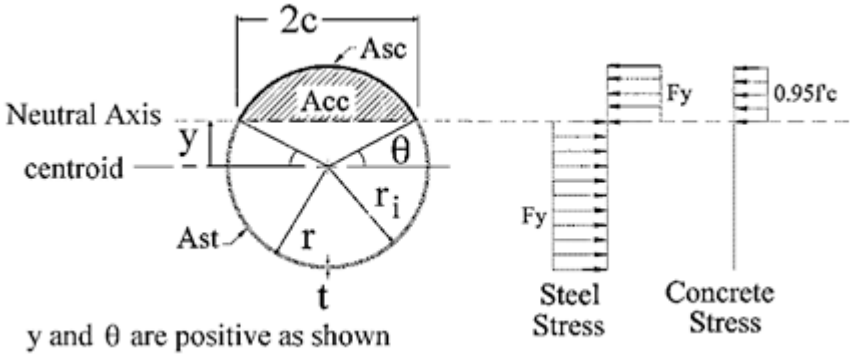

Where

A_{cc} = area of concrete effective in compression
A_{sc} = area of the steel tube in compression
A_{st} = area of the steel tube in tension
A_{bc} = area of the internal steel reinforcing in compression
A_{bt} = area of the internal steel reinforcing in tension

Alternatively, a strain-compatibility analysis can be performed with appropriate plastic stress-strain relationships.

1. **CFST Interaction** – A parametric solution for the nominal interaction diagram can be developed using Figure 7.10.2-2 and Equations 7.10.2-6 through 7.10.2-10. Figure 7.10.2-2b also shows normalized interaction curves for various D/t ratios.

Figure 7.10.2-2 Plastic Stress Distribution for CFST

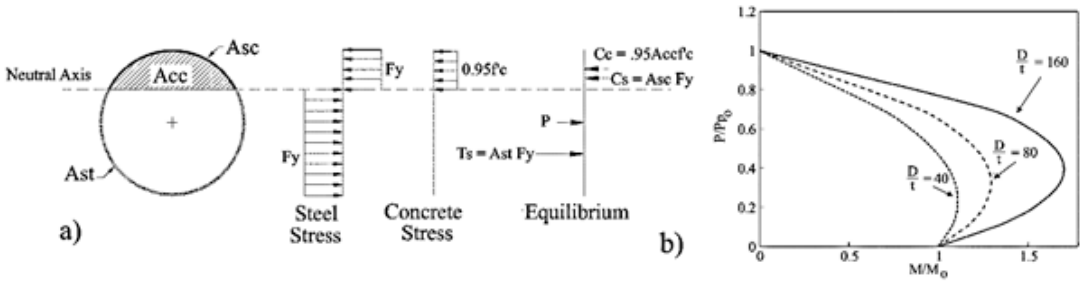

Vacant (7.10.2-5)

$$P_n(y) = \left(\left(\frac{\pi}{2} - \theta\right) r_i{}^2 - yc\right) * 0.95f'_c - 4\theta t r_m F_y \quad (7.10.2\text{-}6)$$

$$M_n(y) = \left(c(r_i{}^2 - y^2) - \frac{c^3}{3}\right) * 0.95f'_c + 4ct\frac{r_m{}^2}{r_i}F_y \quad (7.10.2\text{-}7)$$

$$c = r_i cos\theta \quad (7.10.2\text{-}8)$$

$$\theta = sin^{-1}(\frac{y}{r_m}) \quad (7.10.2\text{-}9)$$

$$r_m = r - \frac{t}{2} \quad (7.10.2\text{-}10)$$

2. **RCFST Interaction** – A parametric solution for the nominal interaction diagram can be developed using Figure 7.10.2-3 and Equations 7.10.2-8 through 7.10.2-15. The internal steel reinforcing is idealized as a thin ring.

Figure 7.10.2-3 Plastic Stress Distribution for RCFST

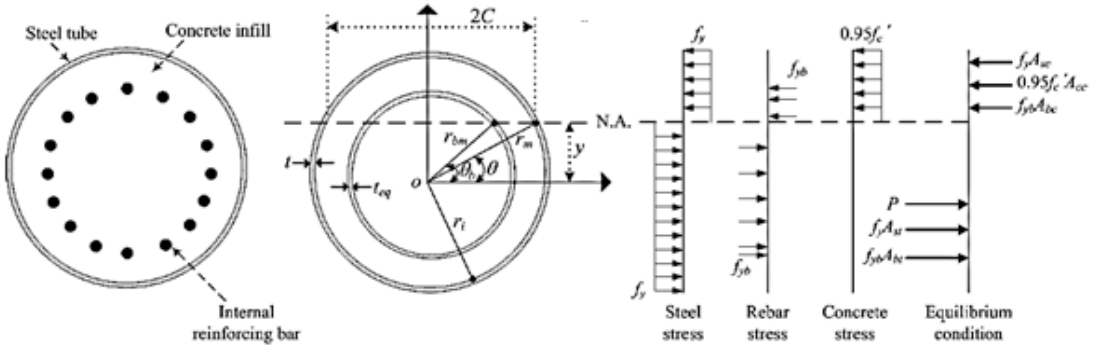

$$P_n(y) = \left(\left(\frac{\pi}{2} - \theta\right) r_i^2 - yc\right) * 0.95f'_c - 4\theta t r_m F_y - t_b r_{bm}\left(4\theta_b F_{yb} + (\pi - 2\theta_b)0.95f'_c\right) \quad (7.10.2\text{-}11)$$

$$M_n(y) = \left(c(r_i^2 - y^2) - \frac{c^3}{3}\right) * 0.95f'_c + 4ct\frac{r_m^2}{r_i}F_y + 4t_b r_{bm} c_b (F_{yb} - 0.95f'_c) \quad (7.10.2\text{-}12)$$

$$c_b = r_b cos\theta_b \quad (7.10.2\text{-}13)$$

$$\theta_b = sin^{-1}\left(\frac{y}{r_{bm}}\right) \quad (7.10.2\text{-}14)$$

$$t_b = \frac{nA_b}{2\pi r_{bm}} \quad (7.10.2\text{-}15)$$

The associated variables are defined as:

- r = radius to the outside of the steel tube (in)
- r_i = radius to the inside of the steel tube (in)
- r_m = radius to the center of the steel tube (in)
- r_{bm} = radius to the center of the internal reinforcing bars (in)
- t = wall thickness of the tube (in)
- t_b = wall thickness of a notional steel ring equivalent to the internal reinforcement (in)
- c = one half the chord length of the tube in compression (in)
- c_b = one half the chord length of a notional steel ring equivalent to the internal reinforcement in compression (in)
- θ = angle used to define c (rad.)
- θ_b = angle used to define c_b (rad.) θ_b shall be taken as $\pi/2$ if y/r_b is greater than 1 and θ_b shall be taken as $-\pi/2$ if y/r_b is less than -1.
- A_b = area of a typical steel bar comprising the internal reinforcement (in^2)
- n = number of internal steel reinforcing bars

The requirements of LRFD-SGS 8.16.2 for piles with permanent steel casing shall be applied to RCFST. Accordingly, the extent of longitudinal reinforcement may be reduced to only the upper portion of the member as needed to provide the required resistance of the member.

For CFST and RCFST, the area of the steel casing shall be included in the determination of the longitudinal reinforcement ratio. For RCFST, the minimum required longitudinal reinforcement ratio may be reduced to 0.005.

7.10.2.F Stability Considerations for Unbraced of Partially-braced Members

Piles and shafts are typically assumed to be continually braced by the surrounding soil. Therefore they are not normally subject to P-Δ effects or other secondary effects. However, it is recognized that special circumstances such as scour, soil liquefaction, piles used in marine structures, or other conditions may leave piles and shafts subject to less than full bracing. In these circumstances, it may be necessary to consider stability effects.

7.10.2.G Shear Resistance

The shear resistance of CFST and RCFST shall be taken as:

$$V_u = \phi V_n = \phi g_4 \left[g_1 \left(0.6 f_y g_2 A_s \right) + 0.0316 g_3 A_c \sqrt{f_c'} \right] \quad (7.10.2\text{-}16)$$

Where:

A_s = *cross-sectional area of the steel tube*
A_c = *area of concrete within the steel tube*
g_1 = *coefficient for the shear capacity of the steel tube = 2.0*
g_2 = *coefficient for the effective shear area of steel tube = 0.5*
g_3 = *coefficient for the effect on concrete strength in shear due to confinement from the steel tube = 3.0*
g_4 = *coefficient for bond development between the concrete and steel tube = 1.0*

The value of 1.0 for term g_4 is based on the assumption that the tube is fully developed as a composite section with the concrete and should be at least one diameter, D, from the point of maximum moment. If this condition is not satisfied, a reduction in g4 may be required.

Equation 7.10.2-16 does not account for the influence of axial load on shear capacity. An alternate equation is presented in the UW research that accounts for axial load and can be utilized at the designer's discretion.

7.10.2.H Corrosion

The design wall thickness for tubes shall be reduced for corrosion over a 75-year minimum design life. Minimum corrosion rates are specified in Section 6.7.1.

7.10.2.I Side resistance

Concrete filled steel tube shafts, installed by drilling and not driven, require reduced side resistance specified by the geotechnical engineer. Side resistance shall be limited to 10 percent of the nominal (ultimate) side resistance unless otherwise approved by the State Foundation Engineer. This is due to the overcutting required when installing permanent casing.

7.10.3 CFST-to-Cap Annular Ring Connections

CFST-to-cap connections shall be designed as fully-restrained connections capable of resisting all load effects. The preferred connection to a concrete cap includes an annular ring at the top of the embedded tube. The connection design involves:

- Design of the annular ring
- Determination of the embedment depth
- A punching shear evaluation in the cap
- General design of the cap for flexure and shear
- An alternative to the annular ring connection involves using a conventional reinforcing cage to splice the CFST or RCFST to the cap.
- Reinforced concrete connection design

7.10.3.A Annular Ring

An annular ring shall be welded to the end of the tube to provide anchorage and stress distribution, as shown in Figure 7.10.3-1. The ring shall be made of a steel of the same thickness and grade as the steel tube. The ring shall extend outside and inside the tube a distance of 8*t*, where t is the thickness of the tube after considering corrosion.

The ring shall have 1” diameter vent holes near the connection to the CFST to ensure concrete consolidation under the annular ring. There shall be a minimum of 4 holes equally spaced on the ring both outside the tube and inside the tube as shown in Figure 7.10.3-1.

Figure 7.10.3-1 Annular Ring Connections

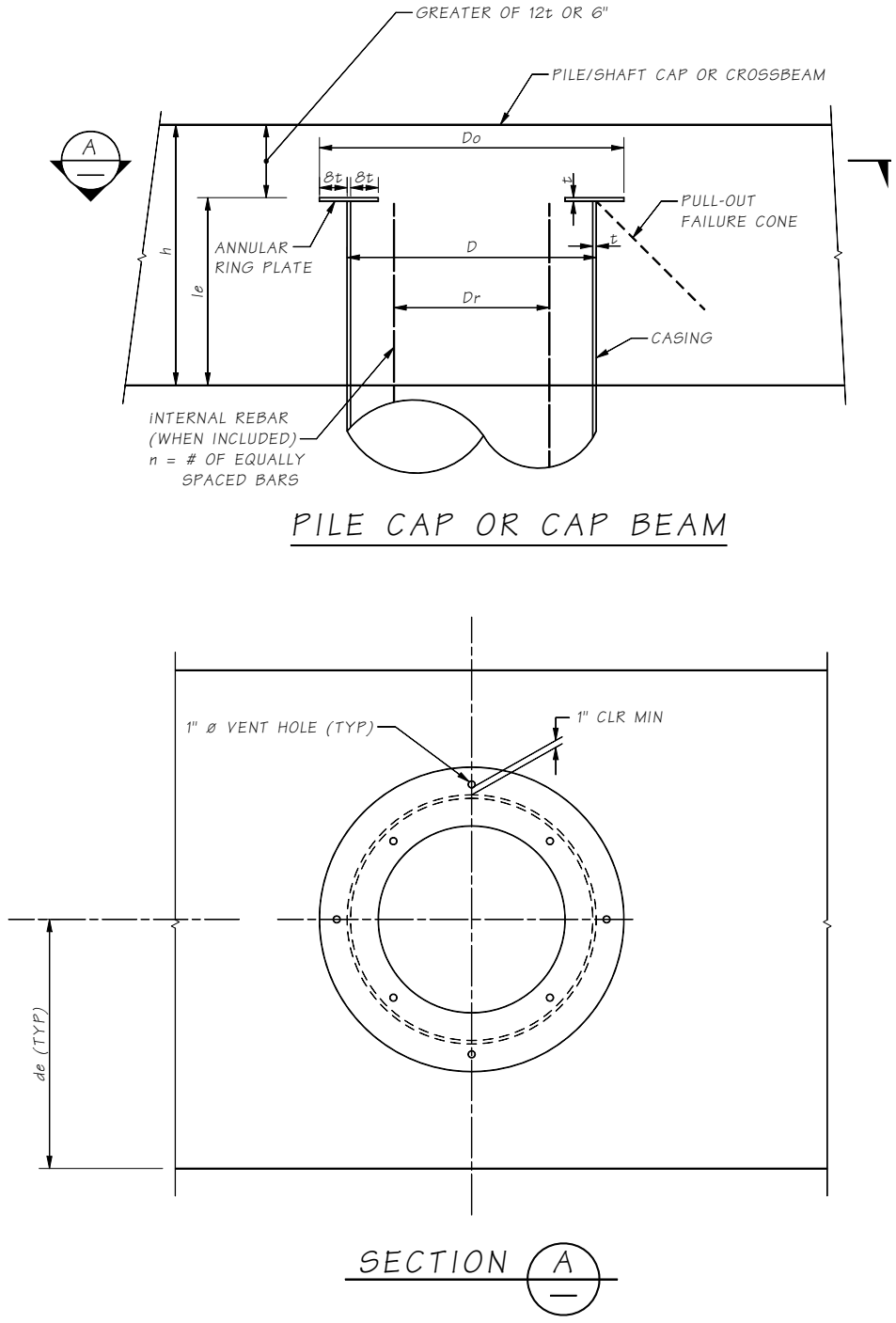

The ring shall be welded to the tube with complete joint penetration (CJP) welds or fillet welds on both the inside and outside of the tube. The fillet welds must be capable of developing the full tensile capacity of the tube. For this purpose, the minimum size, w, of the fillet welds shall be taken as:

$$w \geq \frac{1.47 F_u t}{F_{exx}} \qquad (7.10.3\text{-}1)$$

Where F_u is the specified minimum tensile strength of the tube steel (ksi), and F_{exx} is the classification strength of the weld metal (ksi). The fillet weld size equation is based on AASHTO and does not include the effects of loading direction. To further refine the weld size requirements to include loading direction, refer to the AISC *Steel Construction Manual*. Typical CFST weld details are shown in Figure 7.10.3-2. Note that access issues on the inside of the tube limit the constructability of Options 1 and 3.

Figure 7.10.3-2 Annular Ring Weld Detail

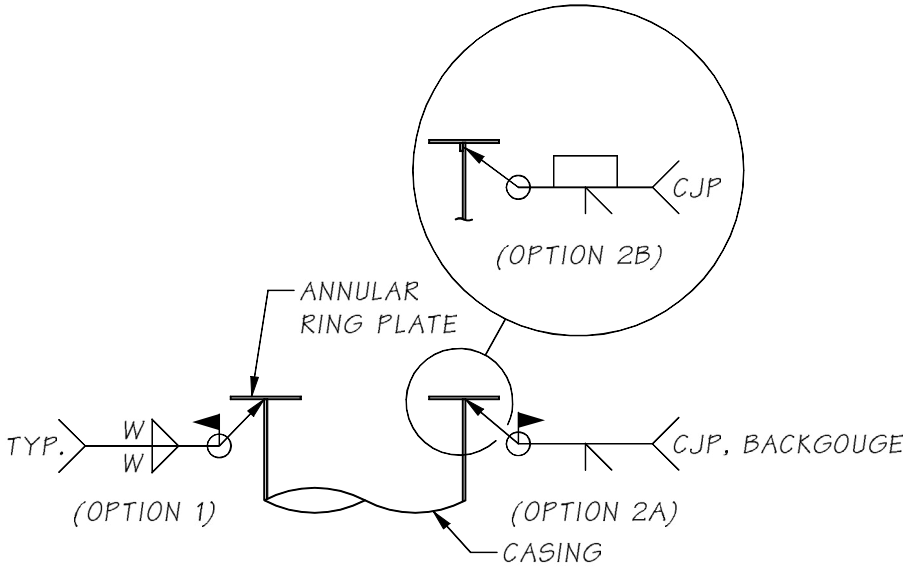

OPTION 1 AND OPTION 2

W - SIZE WELDS TO DEVELOP
FULL CAPACITY OF CASING WALL

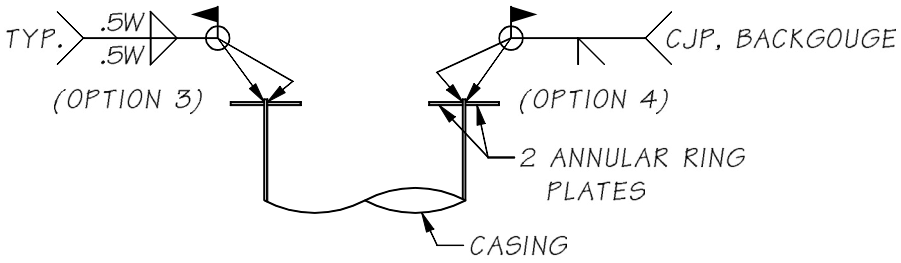

OPTION 3 AND OPTION 4

NOTE: FOR OPTION 3, THE MINIMUM FILLET WELD SIZE SHALL
BE LIMITED TO MINIMUM FILLET WELD SIZE PER AWS D1.1

7.10.3.B Embedment

The tube and the annular ring shall be embedded into the pile cap a distance, le, as defined in the following equations. To develop the yield strength of the CFST and plastic behavior is not expected, then the embedment length shall satisfy:

$$l_e \geq \sqrt{\frac{{D_o}^2}{4} + \frac{3.95DtF_y}{\sqrt{f'_{cf}}}} - \frac{D_o}{2} \qquad (7.10.3\text{-}2)$$

To ensure full plastic behavior of the CFST, then the embedment length shall satisfy:

$$l_e \geq \sqrt{\frac{{D_o}^2}{4} + \frac{5.27DtF_u}{\sqrt{f'_{cf}}}} - \frac{D_o}{2} \qquad (7.10.3\text{-}3)$$

Where f'_{cf} (ksi) is the specified 28-day compressive strength of the cap, D_o is the outside diameter of the annular ring as shown in Figure 7.10.3-1. This embedment length will develop the full plastic capacity of the CFST. As part of the displacement based design of the structure, hinge lengths and strain limits will need to be defined for the CFST. Values for the hinge length and strain limits have not been well documented in the research, however for steel casing fabricated from ASTM A 709 GR 50 steel, an assumed hinge length of one diameter, D, and reduced ultimate tensile strain of 0.13 may be used.

7.10.3.C Punching Shear

The pile cap shall have adequate concrete depth, *h*, to preclude punching through the pile cap. The value of *h* shall satisfy:

$$h \geq \sqrt{\frac{D^2}{4} + \frac{1.68C_{max}}{\sqrt{f'_{cf}}}} - \frac{D}{2} \qquad (7.10.3\text{-}4)$$

In addition to the total cap depth requirement, h, a minimum of 12t or 6", whichever is greater, shall be provided above the annular ring. A layer of longitudinal reinforcement above the annular ring shall be provided to engage the punching shear strut forces.

Where the total compressive force of the couple, C_{max}, shall be taken as:

$$C_{max} = C_c + C_s \qquad (7.10.3\text{-}5)$$

C_c and C_s are the compression forces in the concrete and the steel due to the combined bending and axial load as computed by the plastic stress distribution method for the most extreme load effect at the appropriate limit state.

7.10.3.D Pile Cap and/or Cap Beam Reinforcement

The pile cap should follow conventional design practice and must be adequate to sustain the foundation design loads. However, the concrete cap thickness shall be large enough to preclude punching shear and cone pullout of the CFST piles.

The edge distance shall be large enough to accommodate concrete struts originating at the base of the ring. The minimum edge distance, d_e, measured from center-of-tube to the edge of the cap shall be taken as:

$$d_e \geq D \qquad (7.10.3\text{-}6)$$

CFSTs shall be adequately spaced to avoid intersecting concrete struts. The cap shall be designed to resist all flexural load effects. The flexural reinforcement in both directions shall be spaced uniformly across the length and width of the cap, but the bottom mat of flexural reinforcement will be interrupted by the concrete tube. The interrupted bars shall be provided, but they shall not be relied on to contribute to the flexural resistance of the cap. Figure 7.10.3-3 shows the configuration of the longitudinal reinforcing where it conflicts with the steel tube. Standard 90° hooks shall be used.

Figure 7.10.3-3 Reinforcement Detail at Cap Connection

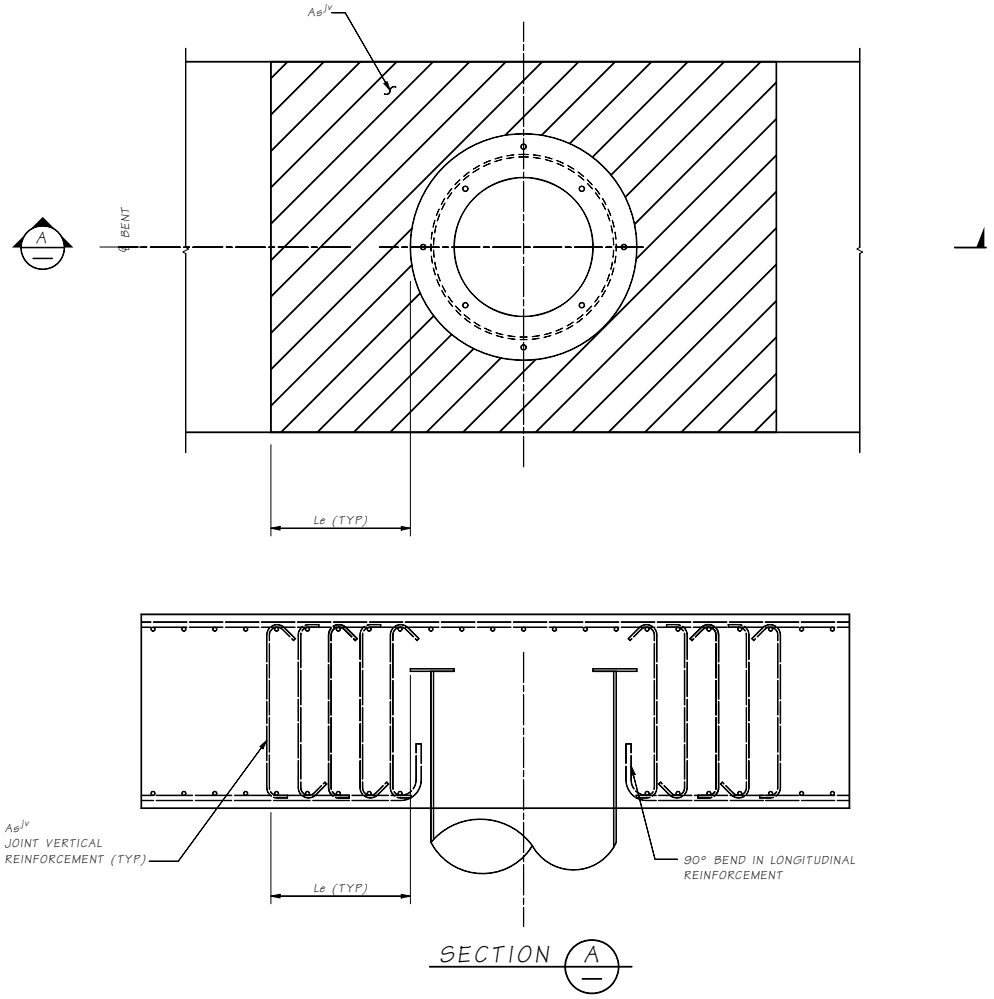

The cap shall be designed to resist all shear load effects. Note that the minimum required embedment results in an average shear stress in the critical area surrounding the tube of $6\sqrt{f'_c}$ (psi). Assuming the concrete is capable of resisting a shear stress of approximately $2\sqrt{f'_c}$, vertical reinforcement will be required to resist an average shear stress of approximately $4\sqrt{f'_c}$. Additional requirements for shear demand resulting from other load combinations must also be considered.

Vertical ties shall be provided within the anchorage regions such that vertical ties intersect the pull-out cone on each side of the CFST subject to shear. The vertical reinforcing, $A_s{}^{jv}$, shall be included according to Equation 7.10.3-7 where Ast is the total area of the steel tube embedded into the cap. This value provides a conservative amount of vertical reinforcing steel and satisfies the $4\sqrt{f'_c}$ requirement.

$$A_s{}^{jv} = 0.65A_{st} \quad (7.10.3\text{-}7)$$

7.10.4 CFST-to-Cap Reinforced Concrete Connections

A circular reinforcing with headed longitudinal bars may be used to connect a CFST member to a concrete cap, where the steel casing is discontinued just below the cap. Terminating the steel casing below the cap, as opposed to terminating at the bottom of the cap or just inside the cap, reduces the chances of concrete spalling at relatively low demands. The reinforcing cage shall satisfy all of the requirements for a reinforced concrete connection, as well as the additional requirements in this section.

7.10.4.A CFST Requirements

A steel ring shall be welded to the inside of the steel casing 3” below the top of casing as shown in Figure 7.10.4-1 to aid in transfer of forces from the reinforcement cage to the steel casing. A square bar the size of the steel casing wall thickness, or a maximum of 1”, is sufficient. The bar may be continuous or consist of discontinuous segments, however the total length shall be at least 75% of the steel casing circumference and shall be equally distributed as shown in Figure 7.10.4-2. Transverse reinforcing shall be used and shall extend into the concrete cap.

Figure 7.10.4-1 CFST-to-Cap Ring Detail

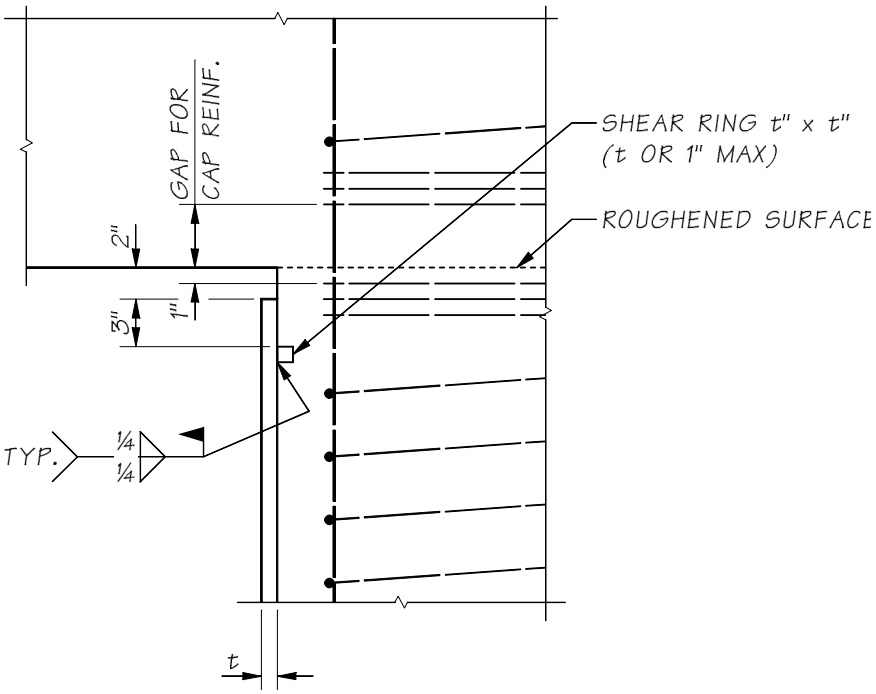

Figure 7.10.4-2 CFST Steel Ring Detail

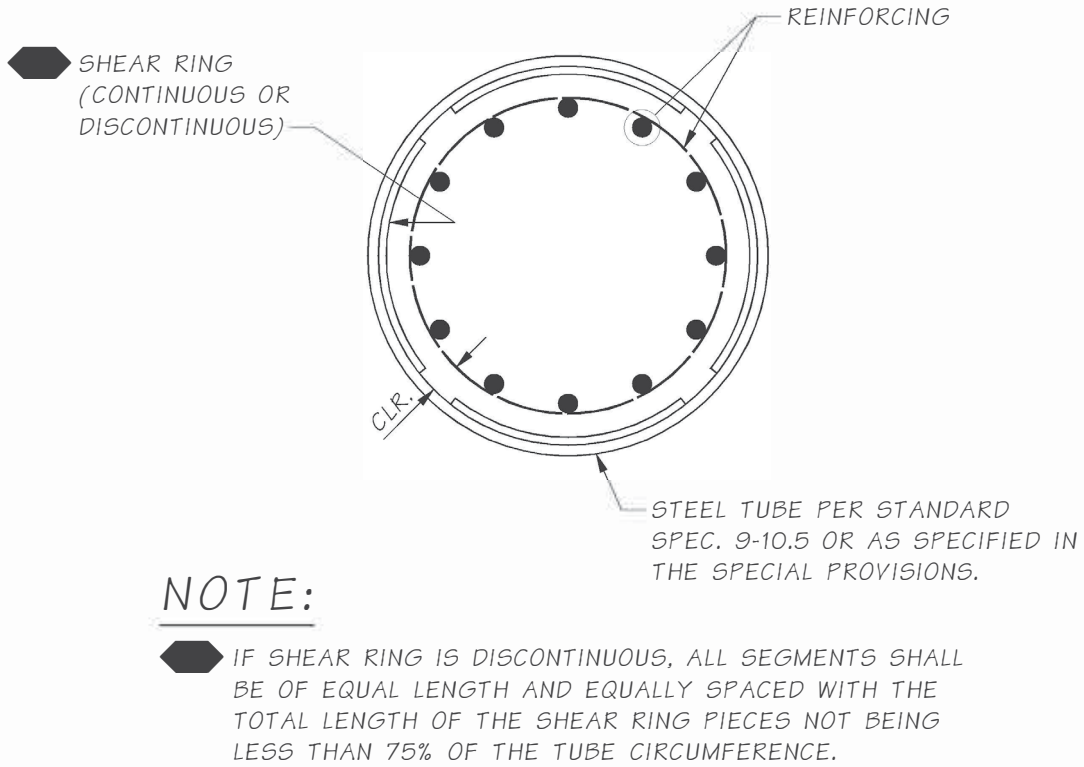

7.10.4.B Embedment and Concrete Cover

The minimum embedment length, l_e, of the reinforcing cage into the cap shall satisfy:

$$l_e \geq \frac{\psi_e F_{yb}}{2\sqrt{f'_{cf}}} d_b \qquad (7.10.4\text{-}1)$$

$$l_e \geq \sqrt{\frac{D^2}{4} + \frac{2F_{yb}A_{st}}{\sqrt{f'_{cf}}}} - \frac{D}{2} \qquad (7.10.4\text{-}2)$$

Where ψ_e is a coating factor, which shall be taken as 1.0 for uncoated bars, and 1.2 for epoxy-coated bars.

The reinforcing cage shall extend into the CFST at least a distance of $3l_d$ below the top of the steel casing, where l_d is the development length of the longitudinal reinforcing as defined in LRFD-BDS.

The concrete cover above headed longitudinal reinforcing shall exceed $3d_h$, where d_h is the diameter of the head. The concrete side cover adjacent to a head shall exceed d_h. When headed bars are not used, the development of longitudinal reinforcement into the cap shall be as specified in LRFD-BDS or LRFD-SGS, as appropriate.

7.10.4.C Pile Cap and/or Cap Beam Reinforcement

The pile cap should follow conventional design practice and must be adequate to sustain the foundation design loads. Joint reinforcement shall follow the requirements of the AASHTO Guide Specifications.

7.10.5 RCFST-to-Column and CFST-to Column Connections

Direct RCFST-to-column connections shall be designed as fully-restrained connections capable of resisting all load effects. The recommended RCFST shaft to reinforced concrete column connection is shown in Figure 7.10.5-1.

All column reinforcement shall be extended into the RCFST shaft for a length greater than or equal to the length required for noncontact lap splices between columns and shafts. The contribution of steel casing to the structural resistance of RCFST's varies from zero at the end of the tube to fully composite at the end of the transition zone. The transition zone length may be taken as 1.0D. The use of slip casing in determining the resistance for RCFST shafts is not permitted.

Figure 7.10.5-1 RCFST-to-Column Connection

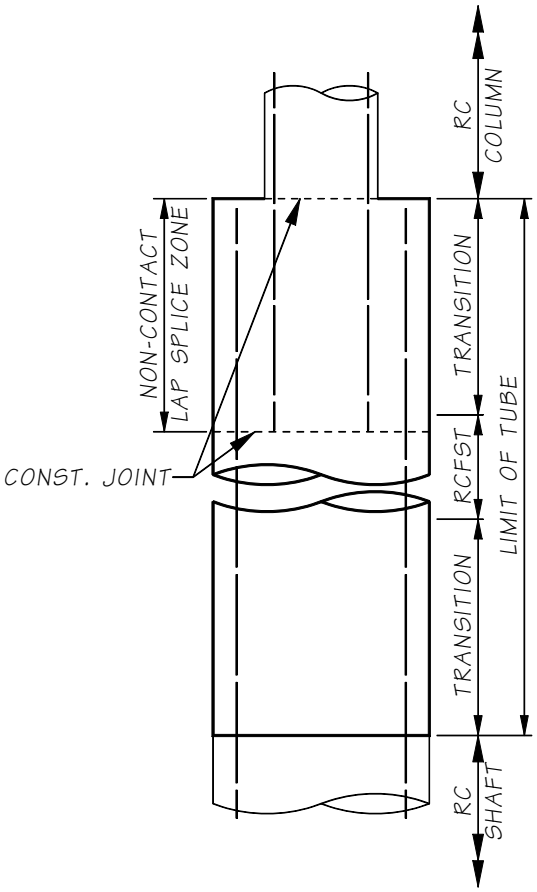

CFST-to column connections do not require additional reinforcement within the shaft. However, the concrete within the shaft does require testing. A cage may be installed to support the CSL tubes or thermal integrity wire that is required. A steel ring shall be welded to the inside of the steel casing 3" below the top of casing to aid in transfer of forces from the column reinforcement cage to the steel casing. See Section 7.10.4A for steel ring requirements.

All column reinforcement shall be extended into the CFST shaft the maximum of 0.5D (shaft diameter) plus the column reinforcement development length and 1.0D.

Figure 7.10.5-2 CFST-to Column Connection

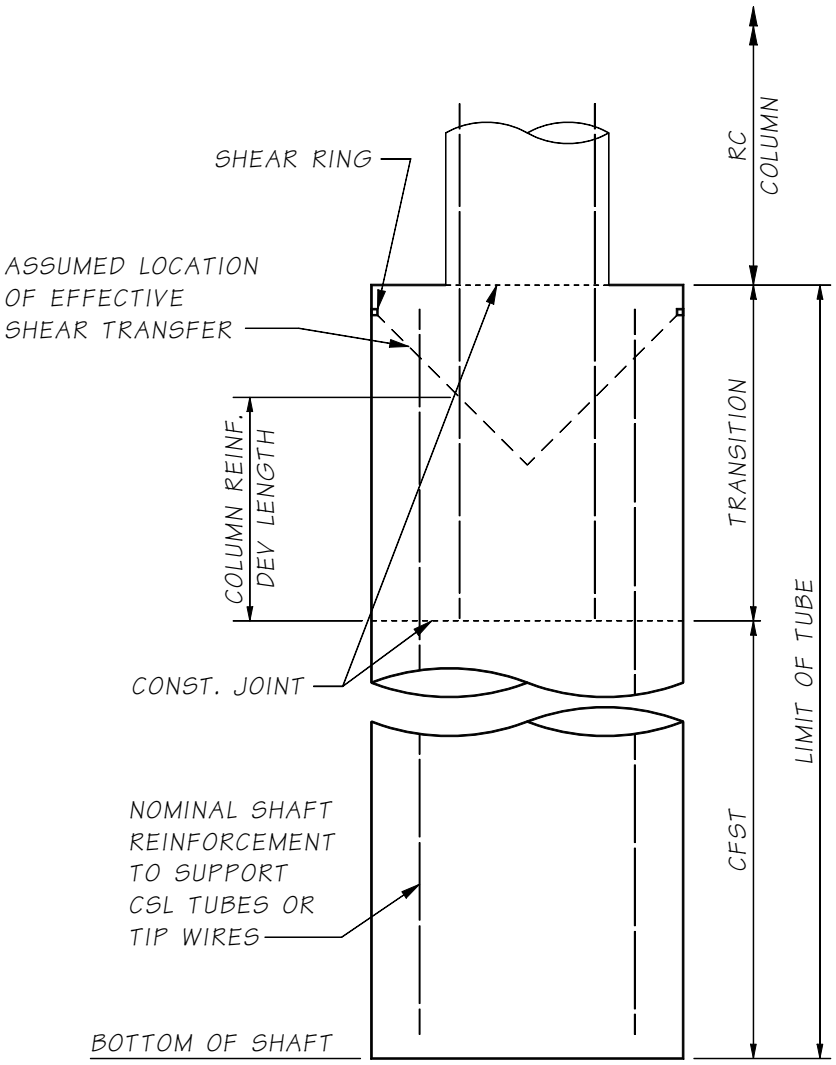

7.10.6 Partially-filled CFST

The use of partially-filled steel tubes for bridge foundations requires the approval of the WSDOT State Design Engineer, and will only be used where conventional CFST members are grossly uneconomical or unconstructible.

Design zones of partially filled steel piles and shafts are shown in Figure 7.10.6-1. Longitudinal and transverse reinforcement shall extend to at least the first point of zero moment along the member under the peak loading condition.

Crosshole sonic log (CSL) testing or thermal integrity profiling (TIP) shall be performed in accordance with *Standard Specifications* Section 6-19.3(9). CSL tubes or thermal wires shall extend to the bottom of concrete.

Corrosion losses shall be considered on each exposed surface of the steel tube.

Figure 7.10.6-1 Partially-filled CFST

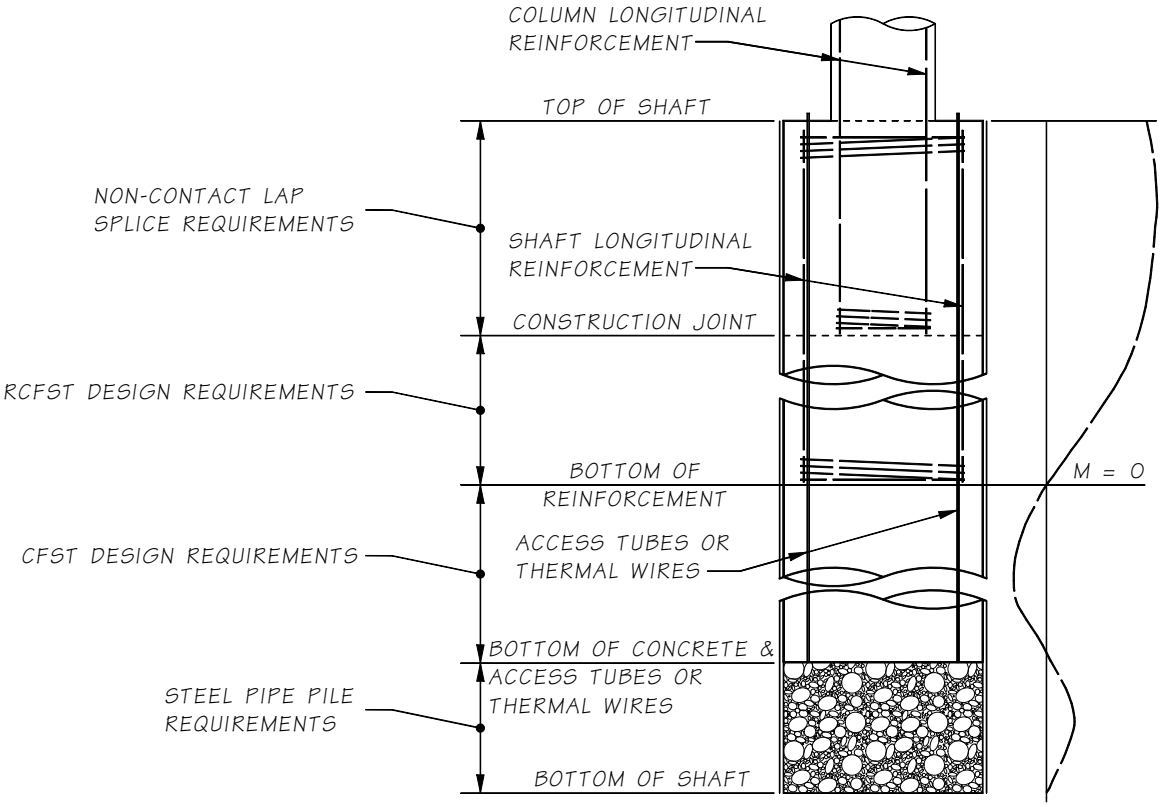

7.10.7 Construction Requirements

For CFSTs with tubes installed open-ended, the insides of the tube shall be excavated and then cleaned with an appropriate tool to remove all adhering soil and other material. When excavating, a nominal plug of soil shall be left at the bottom of the pile as determined by the State Foundation Engineer. The State Foundation Engineer shall be consulted to determine the method for computing axial compressive and uplift (if applicable) capacities of the CFSTs during design. In addition, the method for accepting CFSTs during construction, if installed as a driven pile, will need to be recommended by the State Foundation Engineer. When driving an open ended pile, the total resistance obtained consists of a contribution from end bearing, external side friction, and internal side friction. Also, depending on the pile diameter and soil conditions, the pile could drive

with or without a soil plug. When excavating the soil from inside of an open-ended driven pile, the resistance can be altered from the as-driven condition due to loss of internal side friction. All of these factors need to be considered during the design and shall be based on recommendations from the State Foundation Engineer. Open-ended CFSTs installed using techniques similar to a drilled shaft shall be designed and constructed as a drilled shaft. Closed-ended CFSTs driven as a pile may be designed and accepted in the field similar to a closed-ended steel pile.

Welding for pipe for CFST or RCFSTs shall conform to AWS D1.1/D1.1M, latest edition, Structural Welding Code, except that all weld filler metal shall be low hydrogen material selected from Table 4.1 in AASHTO/AWS D1.5M/D1.5:2010 *Bridge Welding Code*. All seams and splices shall be complete penetration welds.

Welding and joint geometry for the seam shall be qualified in accordance with AWS D1.1/D1.1M, latest edition, Structural Welding Code. The Contractor may submit documentation of prior qualification to the Engineer to satisfy this requirement.

For the fabrication of helical (spiral) seam submerged-arc welded pipe piles, the maximum radial offset of strip/plate edges shall be ⅛ inch. The offset shall be transitioned with a taper weld and the slope shall not be less than a 1-to-2.5 taper. The weld reinforcement shall not be greater than 3⁄16 inches and misalignment of weld beads shall not exceed ⅛ inch.

If spirally welded pipe piles are allowed, skelp splices shall be located at least 1′-0″ away from the annular ring.

Nondestructive evaluation (NDE) requirements for field welded splices shall be identified on the plans. The location of splices and NDE requirements shall be divided into 3 possible zones as determined by the Engineer:

1. No splices permitted – highly stressed areas
2. Splices permitted with 100 percent UT and visual inspection – moderately stressed areas
3. Splices permitted with 100 percent visual inspection – low stressed areas

7.10.8 Notation

A_b = area of a single bar for the internal reinforcement (in^2)
A_{bc} = area of the internal steel reinforcing in compression (in^2)
A_{bt} = area of the internal steel reinforcing in tension (in^2)
A_c = net cross-sectional area of the concrete (in^2)
A_{cc} = area of concrete effective in compression (in^2)
A_g = cross-sectional area of the steel tube (in^2)
A_s = cross-sectional area of the steel tube and the longitudinal internal steel reinforcement (in^2)
A_{sc} = area of the steel tube in compression (in^2)
A_{st} = area of the steel tube in tension (in^2)
c = one half the chord length of the tube in compression (in)
c_b = one half the chord length of a notional steel ring equivalent to the internal reinforcement in compression (in)
D = outside diameter of the tube (in.)
D_o = outside diameter of the annular ring (in.)
d_b = nominal diameter of a reinforcing bar (in)

d_e = minimum edge distance from center of CFST to edge of cap (in)
d_f = depth of cap (in)
E_c = elastic modulus of concrete (ksi)
EI_{eff} = effective composite flexural cross-sectional stiffness of CFST or RCFST (k-in^2)
E_s = elastic modulus of steel (ksi)
F_{exx} = classification strength of weld metal (ksi)
F_u = specified minimum tensile strength of steel (ksi)
F_y = specified minimum yield strength of steel (ksi)
F_{yb} = specified minimum yield strength of reinforcing bars used for internal reinforcement (ksi)
f_c' = minimum specified 28-day compressive strength of concrete (ksi)
f'_{cf} = minimum specified 28-day compressive strength of concrete in a cap or footing (ksi)
g_1 = coefficient for the shear capacity of the steel tube
g_2 = coefficient for the effective shear area of steel tube
g_3 = coefficient for the effect on concrete strength in shear due to confinement from the steel tube
g_4 = coefficient for bond development between the concrete and steel tube
h = cap depth above the CFST required to resist punching shear in a cap (in)
I_c = uncracked moment of inertial of the concrete about the centroidal axis (in^4)
I_s = moment of inertia of the steel tube and the longitudinal internal steel reinforcement about the centroidal axis (in^4)
l_e = Required embedment length for CFST embedded in a concrete cap (in)
M(y) = nominal moment resistance as a function of the parameter y (kip-in)
Mo = plastic moment resistance of members without axial load (kip-in)
n = number of equally spaced longitudinal internal steel reinforcement
$P(y)$ = nominal compressive resistance as function of the parameter y (kips)
P_u = factored axial load acting on member (kip)
P_o = compressive resistance of a member without consideration of flexure (kips)
r = radius to the outside of the steel tube (in)
r_{bm} = radius to the center of the internal reinforcing bars (in)
r_i = radius to the inside of the steel tube (in)
r_m = radius to the center of the steel tube (in)
t = wall thickness of the tube, adjusted for corrosion (in)
t_b = wall thickness of a notional steel ring equivalent to the internal reinforcement (in)
t_0 = wall thickness of the tube, not adjusted for corrosion (in)
θ = angle used to define c (rad)
θ_b = angle used to define c_b (rad). θ_b shall be taken as $\pi/2$ if y/r_b is greater than 1 and θ_b shall be taken as $-\pi/2$ if y/r_b is less than -1.

7.11 Bridge Standard Drawings

7.3-A1-1 Column Silo Cover

7.8-A1-1 Typical Shaft Details

7.12 Appendices

Appendix 7.3-A2	Noncontact Lap Splice Length Column to Shaft Connections
Appendix 7-B1	Linear Spring Calculation Method II (Technique I)
Appendix 7-B2	Pile Footing Matrix Example Method II (Technique I)
Appendix 7-B3	Non-Linear Springs Method III

Appendix 7.3-A2 Noncontact Lap Splice Length Column to Shaft Connections

Column Diameter (ft)	Shaft Diameter (ft)	Column Longitudinal Bar Size							
		#6	#7	#8	#9	#10	#11	#14	#18
		Basic Lap Splice Length, L_s (in)							
		36.7	42.8	49.0	55.2	62.2	69.0	82.9	110.5
		Minimum Noncontact Lap Splice Length, $L_{ns} = L_s + s$							
3'-0"	5.5 *	4'-6"	5'-0"	5'-6"	6'-6"	7'-0"	7'-6"	8'-6"	11'-0"
	6.0	5'-0"	5'-6"	6'-0"	6'-6"	7'-0"	7'-6"	9'-0"	11'-0"
	6.5	5'-0"	5'-6"	6'-0"	7'-0"	7'-6"	8'-0"	9'-0"	11'-6"
	7.0	5'-6"	6'-0"	6'-6"	7'-0"	7'-6"	8'-0"	9'-6"	11'-6"
	8.0	6'-0"	6'-6"	7'-0"	7'-6"	8'-0"	8'-6"	10'-0"	12'-0"
3'-6"	6.0 *	4'-6"	5'-0"	5'-6"	6'-6"	7'-0"	7'-6"	8'-6"	11'-0"
	6.5	5'-0"	5'-6"	6'-0"	6'-6"	7'-0"	7'-6"	9'-0"	11'-0"
	7.0	5'-0"	5'-6"	6'-0"	7'-0"	7'-6"	8'-0"	9'-0"	11'-6"
	8.0	5'-6"	6'-0"	6'-6"	7'-6"	8'-0"	8'-6"	9'-6"	12'-0"
	9.0	6'-0"	6'-6"	7'-0"	8'-0"	8'-6"	9'-0"	10'-0"	12'-6"
4'-0"	6.5 *	4'-6"	5'-0"	5'-6"	6'-6"	7'-0"	7'-6"	8'-6"	11'-0"
	7.0	5'-0"	5'-6"	6'-0"	6'-6"	7'-0"	7'-6"	9'-0"	11'-0"
	8.0	5'-6"	6'-0"	6'-6"	7'-0"	7'-6"	8'-0"	9'-6"	11'-6"
	9.0	6'-0"	6'-6"	7'-0"	7'-6"	8'-0"	8'-6"	10'-0"	12'-0"
	9.5	6'-0"	6'-6"	7'-0"	8'-0"	8'-6"	9'-0"	10'-0"	12'-6"
4'-6"	7.0 *	4'-6"	5'-0"	5'-6"	6'-6"	7'-0"	7'-6"	8'-6"	11'-0"
	8.0	5'-0"	5'-6"	6'-0"	7'-0"	7'-6"	8'-0"	9'-0"	11'-6"
	9.0	5'-6"	6'-0"	6'-6"	7'-6"	8'-0"	8'-6"	9'-6"	12'-0"
	9.5	6'-0"	6'-6"	7'-0"	7'-6"	8'-0"	8'-6"	10'-0"	12'-0"
	10.0	6'-0"	6'-6"	7'-0"	8'-0"	8'-6"	9'-0"	10'-0"	12'-6"
5'-0"	8.0 *	5'-0"	5'-6"	6'-0"	6'-6"	7'-0"	7'-6"	9'-0"	11'-0"
	9.0	5'-6"	6'-0"	6'-6"	7'-0"	7'-6"	8'-0"	9'-6"	11'-6"
	9.5	5'-6"	6'-0"	6'-6"	7'-6"	8'-0"	8'-6"	9'-6"	12'-0"
	10.0	6'-0"	6'-6"	7'-0"	7'-6"	8'-0"	8'-6"	10'-0"	12'-0"
	11.0	6'-6"	7'-0"	7'-6"	8'-0"	8'-6"	9'-0"	10'-6"	12'-6"
5'-6"	8.0 *	4'-6"	5'-0"	5'-6"	6'-6"	7'-0"	7'-6"	8'-6"	11'-0"
	9.0	5'-0"	5'-6"	6'-0"	7'-0"	7'-6"	8'-0"	9'-0"	11'-6"
	9.5	5'-6"	6'-0"	6'-6"	7'-0"	7'-6"	8'-0"	9'-6"	11'-6"
	10.0	5'-6"	6'-0"	6'-6"	7'-6"	8'-0"	8'-6"	9'-6"	12'-0"
	11.0	6'-0"	6'-6"	7'-0"	8'-0"	8'-6"	9'-0"	10'-0"	12'-6"
6'-0"	9.0 *	5'-0"	5'-6"	6'-0"	6'-6"	7'-0"	7'-6"	9'-0"	11'-0"
	9.5	5'-0"	5'-6"	6'-0"	7'-0"	7'-6"	8'-0"	9'-0"	11'-6"
	10.0	5'-6"	6'-0"	6'-6"	7'-0"	7'-6"	8'-0"	9'-6"	11'-6"
	11.0	6'-0"	6'-6"	7'-0"	7'-6"	8'-0"	8'-6"	10'-0"	12'-0"
	12.0	6'-6"	7'-0"	7'-6"	8'-0"	8'-6"	9'-0"	10'-6"	12'-6"

(Continued on following page)

Column Diameter (ft)	Shaft Diameter (ft)	Column Longitudinal Bar Size							
		#6	#7	#8	#9	#10	#11	#14	#18
		Basic Lap Splice Length, L_s (in)							
		36.7	42.8	49.0	55.2	62.2	69.0	82.9	110.5
		Minimum Noncontact Lap Splice Length, $L_{ns} = L_s + s$							
6'-6"	9.0 *	4'-0"	4'-6"	5'-0"	6'-0"	6'-6"	7'-0"	8'-0"	10'-6"
	9.5	4'-6"	5'-0"	5'-6"	6'-0"	6'-6"	7'-0"	8'-6"	10'-6"
	10.0	4'-6"	5'-0"	5'-6"	6'-6"	7'-0"	7'-6"	8'-6"	11'-0"
	11.0	5'-0"	5'-6"	6'-0"	7'-0"	7'-6"	8'-0"	9'-0"	11'-6"
	12.0	5'-6"	6'-0"	6'-6"	7'-6"	8'-0"	8'-6"	9'-6"	12'-0"
7'-0"	9.5 *	4'-0"	4'-6"	5'-0"	6'-0"	6'-6"	7'-0"	8'-0"	10'-6"
	10.0	4'-6"	5'-0"	5'-6"	6'-0"	6'-6"	7'-0"	8'-6"	10'-6"
	11.0	5'-0"	5'-6"	6'-0"	6'-6"	7'-0"	7'-6"	9'-0"	11'-0"
	12.0	5'-6"	6'-0"	6'-6"	7'-0"	7'-6"	8'-0"	9'-6"	11'-6"
7'-6"	10.0 *	4'-0"	4'-6"	5'-0"	6'-0"	6'-6"	7'-0"	8'-0"	10'-6"
	11.0	4'-6"	5'-0"	5'-6"	6'-6"	7'-0"	7'-6"	8'-6"	11'-0"
	12.0	5'-0"	5'-6"	6'-0"	7'-0"	7'-6"	8'-0"	9'-0"	11'-6"
8'-0"	11.0 *	4'-6"	5'-0"	5'-6"	6'-0"	6'-6"	7'-0"	8'-6"	10'-6"
	12.0	5'-0"	5'-6"	6'-0"	6'-6"	7'-0"	7'-6"	9'-0"	11'-0"
8'-6"	11.0 *	4'-0"	4'-6"	5'-0"	6'-0"	6'-6"	7'-0"	8'-0"	10'-6"
	12.0	4'-6"	5'-0"	5'-6"	6'-6"	7'-0"	7'-6"	8'-6"	11'-0"

Notes:

1. All values based on normal weight concrete with f'_c = 4.0 ksi.

2. The basic splice length, L_s , is based on 1.7 times the tension development length L_d. L_d is calculated per Section 5.11.2.1.1 of the AASHTO LRFD Bridge Design Specifications 7th Edition, 2015 Interim Revisions. The 1.7 (Class C lap splice) factor was maintained for the basic splice length calculations to be consistent with the original TRAC research for noncontact lap splices. This table does not apply when column longitudinal bars are bundled.

3. Development lengths are based on uncoated deformed bars. For epoxy coated bars add $0.2*L_s$ or $0.5*L_s$ to L_{ns} depending on column bar spacing and clear cover. See AASHTO 5.11.2.1.2 for spacing and cover requirements.

4. The clearance between the column and shaft reinforcement, s, is based on an out-to-out dimension of the cages. Concrete cover to the column reinforcing is 2", and concrete cover to the shaft reinforcing is per Std. Spec. 6-19.3(5)C. Also, s has been increased by the allowable shaft construction tolerances in Std. Spec. 6-19.3(1)A. If an oversized cage is used in conjunction with an oversize casing, s may need to be increased further.

5. The reinforcement confinement factor, λ_{rc}, is assumed to be 0.4 for all cases and is based on the assumption that the column reinforcement is well confined with column transverse reinforcement, shaft transverse reinforcement, and in most cases a permanent shaft casing.

6. All noncontact splice lengths have been rounded up to the nearest 6".

* Minimum common shaft diameter for specified column diameter to meet minimum clearance and construction tolerances.

Appendix 7-B1 Linear Spring Calculation Method II (Technique I)

Method II (Technique I) - Matrix Coefficient Definitions

The stiffness matrix containing the spring values and using the standard coordinate system is shown in Figure 7-B1-1. The sign of all the terms must be determined based on the sign convention.

Figure 7-B1-1 Global Coordinate System

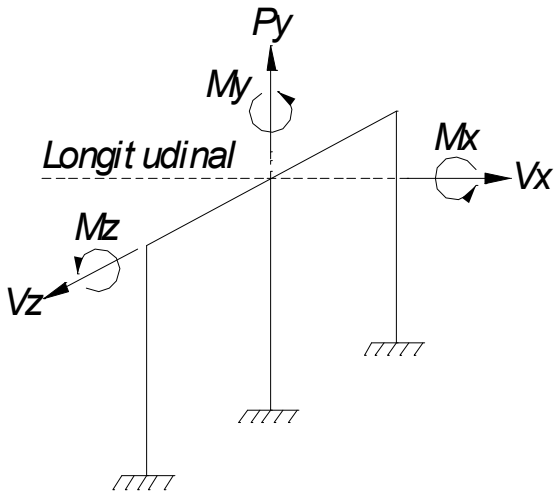

Figure 7-B1-2 Standard Global Matrix

$$\begin{Bmatrix} & Vx & Py & Vz & Mx & My & Mz \\ Vx & K11 & 0 & 0 & 0 & 0 & K16 \\ Py & 0 & K22 & 0 & 0 & 0 & 0 \\ Vz & 0 & 0 & K33 & K34 & 0 & 0 \\ Mx & 0 & 0 & K43 & K44 & 0 & 0 \\ My & 0 & 0 & 0 & 0 & K55 & 0 \\ Mz & K61 & 0 & 0 & 0 & 0 & K66 \end{Bmatrix} \times \begin{Bmatrix} Disp. \\ \Delta x \\ \Delta y \\ \Delta z \\ \theta x \\ \theta y \\ \theta z \end{Bmatrix} = \begin{Bmatrix} Force \\ Vx \\ Py \\ Vz \\ Mx \\ My \\ Mz \end{Bmatrix}$$

Where the linear spring constants or K values are defined as follows using the Global Coordinates:

K11 = $+V_{x(app)}/+\Delta_x$ = Longitudinal Lateral Stiffness (kip/in)
K22 = AE/L = Vertical or Axial Stiffness (k/in)
K33 = $-V_{z(app)}/-\Delta_z$ = Transverse Lateral Stiffness (k/in)
K44 = $+M_{x(app)}/+\theta_x$ = Transverse Bending or Moment Stiffness (kip-in/rad)
K55 = JG/L = Torsional Stiffness (kip-in/rad)
K66 = $+M_{z(app)}/+\theta_z$ = Longitudinal Bending or Moment Stiffness (kip-in/rad)
K34 = $-V_{z(ind)}/+\theta_x$ = Transverse Lateral Cross-couple term (kip/rad)
K16 = $+V_{x(ind)}/+\theta_z$ = Longitudinal Lateral Cross-couple term (kip/rad)
K43 = $+M_{x(ind)}/-\Delta_z$ = Transverse Moment Cross-couple term (kip-in/in)
K61 = $+M_{z(ind)}/+\Delta_x$ = Longitudinal Moment Cross-couple term (kip-in/in)

Fixed Head vs. Free Head Spring Calculations

Fixed Head

If the shear and moment are creating deflection in OPPOSING directions where the spring is located, a fixed head boundary condition is required to model the loaded foundation in a finite element model. See Figure 7-B1-3 for the fixed head coordinate system assumed in the following spring calculations.

Since applying load to a fixed end results in no reaction, a soil/structure interaction analysis will generally analyze the shear and moment simultaneously as a free head. Using the soil response results, a cross-couple correction term will be required in a FEM to produce the induced moment in the element modeling the fixed head condition. If accurate stresses in fixed head element are not required, the cross-couple term may be omitted.

There are two ways to model fixed head pile group. The most common method for a column footing is to use a group spring to model a group of piles or shafts as one set of springs. This method uses six linear springs to represent the foundation behavior. Lateral loads resisted by Cross-couples terms do not apply and individual pile loads must be calculated from the FEM results.

The second method would be to model the individual piles. This is more helpful for analyzing local stresses in the foundation cap element and for each pile. Cross-couple terms may be included and individual pile loads are generated in the FEM.

Figure 7-B1-3 Fixed Head Coordinate System

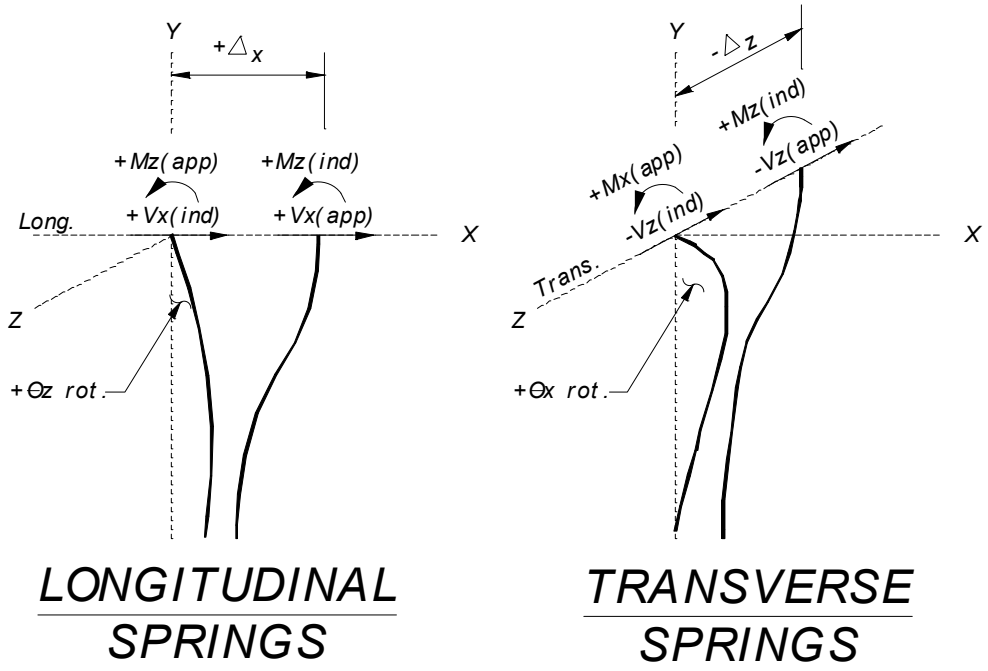

Free Head

If the shear and moment are creating deflection in the SAME direction where the spring is located, a free head boundary condition is required to model the loaded foundation in a finite element model. If a free head boundary condition is assumed Method II (Technique II) described in Section 7.2.5.

Vertical Springs (K22)

Vertical spring constants can be calculated from the following three assumptions. See Figure 7-B1-4 and the following definitions. REF: *Seismic Design of Highway Bridges Workshop Manual*, Pub. No. FHWA-IP-81-2, Jan 1981.

Figure 7-B1-4 Pile Stress

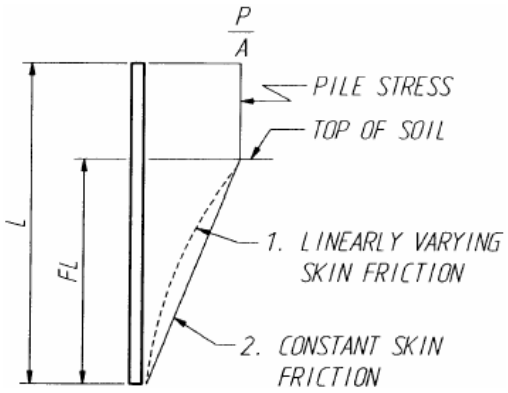

A = Cross-sectional area (in^2)
E = Young's modulus (ksi)
L = Length of pile (in)
F = Fraction of pile embedded

Point Bearing Piles:

$$K22 = \frac{AE}{L}$$

Friction Piles with linearly varying skin friction:

$$K22 = \frac{AE}{\left(1-\frac{2F}{3}\right)L}, with\ F = 1.0\ (fully\ embedded), K22 = 3\frac{AE}{L}$$

Friction Piles with constant skin friction:

$$K22 = \frac{AE}{\left(1-\frac{F}{2}\right)L}, with\ F = 1.0\ (fully\ embedded), K22 = 2\frac{AE}{L}$$

Torsional Springs (K55)

In general, torsional spring constants for individual piles are based on the mechanics of the pile. The equation for torsional stiffness is given below.

$$K55 = \frac{M}{\varphi} = \frac{T}{\varphi} = \frac{JG}{L}$$

Where:

G = 0.4E
J = Torsional moment of inertia
L = Length of pile

Lateral Springs (K11 & K33)

A fixed head lateral spring can be found by applying the shear and axial load in a soil response program with the rotation at the top equal to zero and finding the lateral deflection that results. The spring value is the applied shear divided by the resulting deflection.

$$K11 = \frac{V_{x(app)}}{\Delta_x}\ (longitudinal) \qquad K33 = \frac{V_{z(app)}}{-\Delta_z}\ (transverse)$$

Rotational Springs (K44 & K66)

Ideally a fixed head boundary condition would result in no rotation. Therefore K44 and K66 would be infinitely stiff.

In the past, the fixed head rotational springs where found by applying the moment and axial load in a soil response program with the translation at the top equal to zero and finding the rotation that results. The spring value is the applied moment divided by the resulting rotation.

$$K66 = \frac{M_{z(app)}}{\theta_z}\ (longitudinal) \qquad K44 = \frac{MV_{x(app)}}{\theta_x}\ (transverse)$$

Cross-Couple Springs (K16, K34, K43 & K61)

Fixed Head

Cross-couple springs will not be symmetric for non-linear modeling foundation modeling. Since finite element programs will use matrix multiplication to generate reactions, doing the math is the easy way to show the effect of cross-couple terms. Note that K16 and K34 terms will have opposite signs.

$$\begin{Bmatrix} & Vx & Py & Vz & Mx & My & Mz \\ Vx & K11 & 0 & 0 & 0 & 0 & K16 \\ Py & 0 & K22 & 0 & 0 & 0 & 0 \\ Vz & 0 & 0 & K33 & K34 & 0 & 0 \\ Mx & 0 & 0 & K43 & K44 & 0 & 0 \\ My & 0 & 0 & 0 & 0 & K55 & 0 \\ Mz & K61 & 0 & 0 & 0 & 0 & K66 \end{Bmatrix} \times \begin{Bmatrix} Disp. \\ \Delta x \\ \Delta y \\ \Delta z \\ \theta x \\ \theta y \\ \theta z \end{Bmatrix} = \begin{Bmatrix} Force \\ Vx \\ Py \\ Vz \\ Mx \\ My \\ Mz \end{Bmatrix}$$

The longitudinal reactions are:

$$V_x = K11 \cdot \Delta_x + K16 \cdot \theta_z \ and \ M_z = K61 \cdot \Delta_x + K66 \cdot \theta_z$$

The transverse reactions are:

$$V_z = K33 \cdot \Delta_z + K34 \cdot \theta_x \ and \ M_x = K43 \cdot \Delta_z + K44 \cdot \theta_x$$

For a true fixed head boundary condition (translation only) in the X and Z directions, there will be no rotation about the X and Z axis. θ_x and θ_z will be zero (or approach zero). This means the K34 and K16 cross-couple terms will not affect the shear reactions. Likewise, the K66 and K44 rotational terms zero out and do not affect the moment reaction. This leaves the K61 and K43 cross-couple terms to generate induced moments based on the deflections in the X and Z directions. Designers should note, the cross-couple moments are applied to a fixed footing element and are resisted axially by the piles. This affects the local stress in the footing and axial loading of the pile much more than the column moment and shear, which is usually the primary focus for design.

K11 and K66 (or K33 and K44) alone do not predict the shape or reaction of the foundation element. The cross-couple term K16 (or K34) will add a shear force to correct the applied moment deflection.

Modeling real life features may be somewhat different than the theoretically true fixed condition. The top of a column at the superstructure or some pile and shaft applications may have opposing shear and moment, however the moment may be much less than the theoretical induced free head moment value. In other words, there may be significant rotations that need to be accounted for in the spring modeling. Designers need to be aware of this situation and use engineering judgment. The FEM would have rotations about the X and Z axis. θ_x and θ_z will NOT be zero and both the cross-couples terms and rotational springs may significantly affect the analysis.

The spring value for the lateral cross-couple term is the induced shear divided by the associated rotation.

$$K16 = \frac{V_{x(ind)}}{\theta_z}\ (longitudinal) \qquad K34 = \frac{V_{z(ind)}}{\theta_x}\ (transverse)$$

The spring value for the moment cross-couple term is the induced shear divided by the associated rotation.

$$K61 = \frac{M_{x(ind)}}{-\Delta_z}\ (longitudinal) \qquad K43 = \frac{M_{z(ind)}}{-\Delta_x}\ (transverse)$$

Appendix 7-B2 Pile Footing Matrix Example Method II (Technique I)

Method II (Technique I) – Pile Footing Matrix Example

A matrix with cross-couple terms is a valid method to model pile supported footings. The analysis assumes the piles will behave similar to a column fixed at the bottom (in the soil) with lateral translation only at the top (no rotation). This requires fixed head boundary conditions to calculate spring values.

The LPILE program will solve for non-linear soil results for individual piles. See group effects in Section 7.2.5 to reduce the soil properties of a pile in a group in both the transverse and longitudinal directions. This sample matrix calculates a foundation spring for an individual pile.

The pile spring requires eight pile stiffness terms for a matrix as discussed in Appendix 7-B1. The following sample calculations discuss the lateral, longitudinal, and cross-couple spring coefficients for a GTStrudl local coordinate system. See Appendix 7-B1 for axial and torsion springs.

The maximum FEM transverse and longitudinal seismic loads (*Vy*, *Mz*, *Vz*, My and axial Px) provide two loads cases for analysis in LPILE. The LPILE results of these two load cases will be used to calculate lateral, longitudinal, and cross-couple spring coefficients.

This sample calculation assumes there are no group effects. Only the longitudinal direction will be calculated, the transverse direction will be similar. A standard global coordinate system is assumed for the bridge. This sample will assume a different local axis coordinate system to input matrix terms, as shown in Figure 7-B2-1. When the coordinate system changes, the sign convention of shear and moment also will change. This will be expressed in a 6×6 matrix by changing the location of the spring values and in sign of any cross-couple terms.

Figure 7-B2-1 Local Axis Coordinate System

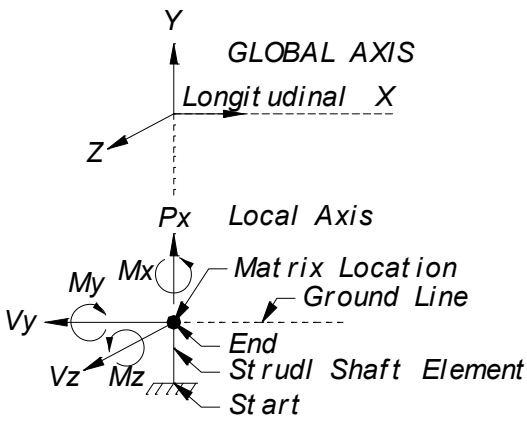

The locations of matrix terms are shown in Figure 7-B1-2. The displacements are local and this requires the spring coefficients to be moved to produce the correct local reactions. The X axis is the new vertical direction. The Y axis is the new longitudinal direction. The spring coefficient definitions and notation remains the same as defined in Appendix 7-B1. Note the shift in diagonal terms and locations of the cross-couple terms.

Figure 7-B2-2 Matrix in Local Coordinate System

$$\begin{Bmatrix} & Px & Vy & Vz & Mx & My & Mz \\ Px & K22 & 0 & 0 & 0 & 0 & 0 \\ Vy & 0 & K11 & 0 & 0 & 0 & K16 \\ Vz & 0 & 0 & K33 & 0 & K34 & 0 \\ Mx & 0 & 0 & 0 & K55 & 0 & 0 \\ My & 0 & 0 & K43 & 0 & K44 & 0 \\ Mz & 0 & K61 & 0 & 0 & 0 & K66 \end{Bmatrix} \times \begin{Bmatrix} Disp. \\ \Delta x \\ \Delta y \\ \Delta z \\ \theta x \\ \theta y \\ \theta z \end{Bmatrix} \equiv \begin{Bmatrix} Force \\ Px \\ Vy \\ Vz \\ Mx \\ My \\ Mz \end{Bmatrix}$$

Where the linear spring constants or K values are defined as follows (see Figure 7-B2-3 for direction and sign convention):

K11	=	$-V_{y(app)}/-\Delta_y$	=	Longitudinal Lateral Stiffness (kip/in)
K22	=	AE/L	=	Vertical or Axial Stiffness (k/in)
K33	=	$-V_{z(app)}/-\Delta_z$	=	Transverse Lateral Stiffness (k/in)
K44	=	$-M_{y(app)}/-\theta_y$	=	Transverse Bending or Moment Stiffness (kip-in/rad)
K55	=	JG/L	=	Torsional Stiffness (kip-in/rad)
K66	=	$M_{z(app)}/\theta_z$	=	Longitudinal Bending or Moment Stiffness (kip-in/rad)
K34	=	$-V_{z(ind)}/-\theta_y$	=	Transverse Lateral Cross-couple term (kip/rad)
K16	=	$-V_{y(ind)}/+\theta_z$	=	Longitudinal Lateral Cross-couple term (kip/rad)
K43	=	$-M_{y(ind)}/-\Delta_z$	=	Longitudinal Moment Cross-couple term (kip-in/in)
K61	=	$+M_{z(ind)}/-\Delta_y$	=	Transverse Moment Cross-couple term (kip-in/in)

Figure 7-B2-3 Local Coordinate System Sign Conventions

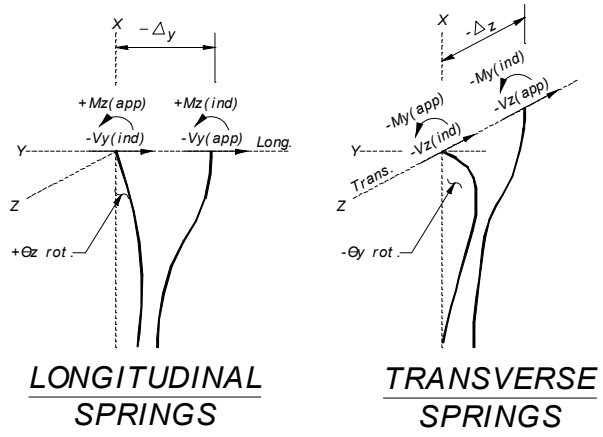

Results from the local coordinate system

Px = 50,000 lbs (axial load)
Vy = -60,000 lbs (shear along longitudinal axis)
Vz = -40,000 lbs (shear along transverse axis)
My = -2,230,000 lb-in (moment about longitudinal axis)
Mz = 3,350,000 lb-in (moment about transverse axis)

Load Case 1 - Longitudinal Direction

Load Case 1 applies the lateral load (Vy) and axial load (Px), and restrains the top against rotation (slope = 0 rad).

Input to LPILE:

Boundary condition code	=	2
Lateral load at the pile head	=	-60000.000 lbs
Slope at the pile head	=	0.000 in/in
Axial load at the pile head	=	50000.000 lbs

Output from LPILE:

X (in)	Deflection Δ_y (in)	Moment $M_{z(ind)}$ (lbs-in)	Shear $V_{y(app)}$ (lbs)	Slope (Rad.)
0.000	-0.13576	3.761E+06	-60000.000	0.000000

Load Case 2 - Longitudinal Direction

Load case 2 applies the moment load (Mz) and axial load (Px), and restrains the top against deflection (deflection = 0 rad).

Input to LPILE:

Boundary condition code	=	4
Deflection at the pile head	=	0.000 in
Moment at the pile head	=	3.350E+06 in-lbs
Axial load at the pile head	=	50000.000 lbs

Output from LPILE:

X (in)	Deflection (in)	Moment $M_{z(ind)}$ (lbs-in)	Shear $V_{y(ind)}$ (lbs)	Slope θ_z (Rad.)
0.000	0.00000	3.350E+06	-33027.667	0.001192

Springs Constants – Longitudinal Direction

K11= $-V_{y(app)}/-\Delta_y$= -60 kip/-0.13576 in= 442 kip/in

K66= $M_{z(app)}/\theta_z$= 3,350 kip-in/0.001192 rad= 2,810,403 kip-in/rad

K16= $-V_{y(ind)}/+\theta_z$= -33 kip/0.001192 rad= -27,685 kip/rad

K61= $+M_{z(ind)}/-\Delta_y$= 3,761 kip-in/-0.13576 in= -27,703 kip-in/in

$$\begin{Bmatrix} & \text{Px} & \text{Vy} & \text{Vz} & \text{Mx} & \text{My} & \text{Mz} \\ \text{Px} & \text{K22} & 0 & 0 & 0 & 0 & 0 \\ \text{Vy} & 0 & 442\,\frac{\text{kip}}{\text{in}} & 0 & 0 & 0 & -27{,}685\,\frac{\text{kip}}{\text{rad}} \\ \text{Vz} & 0 & 0 & \text{K33} & 0 & \text{K34} & 0 \\ \text{Mx} & 0 & 0 & 0 & \text{K55} & 0 & 0 \\ \text{My} & 0 & 0 & \text{K43} & 0 & \text{K44} & 0 \\ \text{Mz} & 0 & -27{,}703\,\frac{\text{kip}-\text{in}}{\text{in}} & 0 & 0 & 0 & 2{,}810{,}403\,\frac{\text{kip}-\text{in}}{\text{rad}} \end{Bmatrix} \times \begin{Bmatrix} \text{Disp.} \\ \Delta\text{x} \\ \Delta\text{y} \\ \Delta\text{z} \\ \theta\text{x} \\ \theta\text{y} \\ \theta\text{z} \end{Bmatrix} \equiv \begin{Bmatrix} \text{Force} \\ \text{Px} \\ \text{Vy} \\ \text{Vz} \\ \text{Mx} \\ \text{My} \\ \text{Mz} \end{Bmatrix}$$

Appendix 7-B3 Non-Linear Springs Method III

Method III – Non-Linear Springs

A finite element model may use non-linear springs based on PY curves to represent foundation response as shown in PY curves graph the relationship between the lateral soil resistance and the associated deflection of the soil. Generally, P stands for a force per unit length (of pile) such as kips per inch. Y is the corresponding horizontal deflection (of pile) in units such as inches.

Figure 7-B3-1 Pile Model Using a Set of Non-linear PY Curves

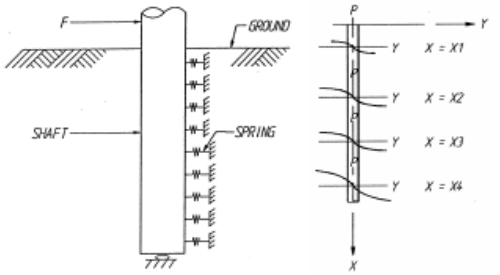

Node placement for springs should attempt to imitate the soil layers. Generally, the upper ⅓ of the pile in stiff soils has the most significant contribution to the lateral soil reaction. Springs in this region should be spaced at most 3 feet apart. Spacing of 2.5 feet has demonstrated results within 10% of LPILE output moment and shear.

Springs for the lower ⅔ of the pile can transition to a much larger spacing. Stiff foundations in weak soils will transfer loads much deeper in the soil and more springs would be sensible.

Transverse and longitudinal springs must include group reduction factors to analyze the structure/soil response. Soil properties are modified in LPILE to account for lateral group effects. LPILE then generates PY curves based on the modified soil properties and desired depths. See Section 7.2.5 for group effects.

FEM programs will accept non-linear springs in a Force (F) vs. Deflection (L) format. P values in a PY curve must be multiplied by the pile length associated with the spring in the FEM. This converts a P value in Force/Length units to Force. This cannot be done during a response spectrum analysis with some FEM programs.

Soil Modulus - ES

Soil Modulus is defined as the force per length (of a pile) associated with a soil deflection. As shown in Figure 7-B3-2, ES is a slope on the PY curve or P/Y. ES is a secant modulus since the PY relationship is nonlinear and the modulus is a constant. The units are F/L per L or F/L2, such as kips per square inch.

Subgrade Modulus - kS

A closely related term is the Subgrade Modulus (or Modulus of Subgrade Reaction) provided in a Geotechnical Report. This is defined as the soil pressure associated with a soil deflection. The units are F/L2 per L or F/L3, such as kips per cubic inch.

Figure 7-B3-2 Secant Modulus Illustration

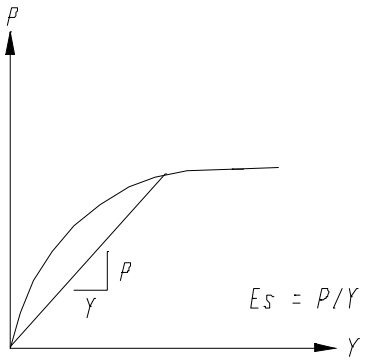

7.99 References

1. AASHTO (2011) "AASHTO *Guide Specification for LRFD Seismic Bridge Design*," American Association of State Highway and Transportation Officials, Washington, D.C.
2. ACI (2011) "*Building Code Requirements for Structural Concrete and Commentary*," American Concrete Institute, Farmington Hills, MI.
3. AISC (2010) "*Specifications for Structural Steel Buildings*" ANSI/AISC Standard 360-10, American Institute of Steel Construction, Chicago, IL.
4. AISI. American Iron and Steel Institute.
5. Caltrans. (2008). Memo to Designers 3-1 Deep Foundations, California Department of Transportation, Sacrameto, CA.
6. Hannigan, P. J., Goble, G.G., Likins, G.E., and Rausche, F. (2006). "Design and Construction of Driven Pile Foundation," FHWA NHI-05-042, Federal Highway Administration, U.S. Department of Transportation, Washington, D.C., Vol. I.
7. Roeder, C.W, Lehman, D.E.(2012) Initial Investigation of Reinforced Concrete- filled Tubes for use in Bridge Foundations, Report No. WA-RD 776.1, Washington State Transportation Center (TRAC), University of Washington, Seattle, WA.
8. Roeder, C.W., Lehman, D.E., and Bishop, E. (2010) "*Strength and Stiffness of Circular Concrete-filled Tubes*," ASCE, Journal of Structural Engineering, Vol 136, No 12, pgs, 1545-53, Reston, VA.
9. Roeder, C.W, Lehman, D.E., and Thody, R. (2009) "*Composite Action in CFT Components and Connections*," AISC, Engineering Journal, Chicago, IL.
10. Stephens, M.T, Lehman, D.E, and Roeder, C.W. (2016) "*Concrete-Filled Tube Bridge Pier Connections for Accelerated Bridge Construction*." California Department of Transportation, Report Number CA15-2417.

Chapter 8 Walls and Buried Structures Contents

8.1 Retaining Walls 8-1
8.1.1 General 8-1
8.1.2 Common Types of Retaining Walls 8-2
8.1.2.A Preapproved Proprietary Walls 8-2
8.1.2.A.1 Structural Earth Walls (SE) 8-2
8.1.2.A.2 Other Proprietary Walls 8-3
8.1.2.B Geosynthetic Wrapped Face Walls 8-3
8.1.2.C Reinforced Concrete Walls 8-3
8.1.2.D Soldier Pile Walls and Soldier Pile Tieback Walls 8-3
8.1.2.E Soil Nail Walls 8-3
8.1.3 General Design Considerations 8-4
8.1.4 Design of Reinforced Concrete Retaining Walls 8-4
8.1.4.A Standard Reinforced Concrete Retaining Walls 8-4
8.1.4.A.1 Standard Cast-In-Place Reinforced Concrete Retaining Wall Types 1 through 8 8-4
8.1.4.A.2 Standard Precast Reinforced Concrete Retaining Wall . . . 8-5
8.1.4.B Non-Standard Reinforced Concrete Retaining Walls 8-6
8.1.4.B.1 Bearing Resistance, Eccentricity, and Sliding Stability 8-7
8.1.4.B.2 Application of Lateral Loads 8-7
8.1.4.B.3 Application of Collision Loads 8-7
8.1.4.B.4 Wall Footing Structural Design 8-7
8.1.4.B.5 Wall Stem Structural Design 8-8
8.1.5 Design of Cantilever Soldier Pile and Soldier Pile Tieback Walls 8-10
8.1.5.A Ground Anchors (Tiebacks) 8-10
8.1.5.B Design of Soldier Pile (discrete vertical elements) 8-11
8.1.5.B.1 Application of Lateral Loads 8-11
8.1.5.B.2 Determining Depth of Pile Embedment 8-11
8.1.5.B.3 Soldier Pile Shaft Backfill 8-11
8.1.5.C Design of Lagging 8-12
8.1.5.C.1 Temporary Timber Lagging 8-12
8.1.5.C.2 Permanent Lagging 8-12
8.1.5.D Design of Fascia Panels 8-13
8.1.6 Design of Structural Earth Walls 8-13
8.1.6.A Preapproved Proprietary Structural Earth Walls 8-14
8.1.6.B Non-Preapproved Proprietary Structural Earth Walls 8-14
8.1.7 Design of Geosynthetic Walls 8-14
8.1.7.A Standard Geosynthetic Wrapped Face Walls 8-14
8.1.7.B Non-Standard Geosynthetic Walls 8-14
8.1.8 Design of Soil Nail Walls 8-15
8.1.9 Design of Shaft Walls 8-15
8.1.10 Scour of Retaining Walls 8-15

8.1.11 Miscellaneous Items . . . 8-18
8.1.11.A Architectural Finishes and Top of Wall Profile . . . 8-18
8.1.11.B Worker Fall Protection . . . 8-18
8.1.11.C Pedestrian and Bicycle Railings for Fall Protection . . . 8-18
8.1.11.D Drainage . . . 8-18
8.1.11.E Expansion, Contraction and Construction Joints . . . 8-19
8.1.11.E.1 Expansion Joints . . . 8-19
8.1.11.E.2 Contraction Joints . . . 8-20
8.1.11.E.3 Construction Joints . . . 8-20
8.1.11.F Detailing of Standard Reinforced Concrete Retaining Walls . . . 8-20
8.1.11.G Embankment Widening at End of Wall . . . 8-20
8.1.11.H Wall Face Embedment . . . 8-20

8.2 Noise Barrier Walls . . . 8-21
8.2.1 General . . . 8-21
8.2.2 Loads . . . 8-21
8.2.3 Design . . . 8-22
8.2.3.A Standard Plan Noise Barrier Walls . . . 8-22
8.2.3.B Non-Standard Noise Barrier Walls . . . 8-24

8.3 Buried Structures . . . 8-25
8.3.1 General Policy . . . 8-25
8.3.2 WSDOT Templates and Standard Plans . . . 8-26
8.3.2.A Buried Structure Templates . . . 8-26
8.3.2.B Buried Structure Standard Plans . . . 8-26
8.3.3 General Design Requirements . . . 8-27
8.3.3.A Design Delivery Methods . . . 8-27
8.3.3.A.1 Contractor Supplied Design . . . 8-27
8.3.3.A.2 Agency Supplied Design . . . 8-27
8.3.3.A.3 Design Build . . . 8-28
8.3.3.B Application of Loads . . . 8-28
8.3.3.B.1 Live Load, LL . . . 8-28
8.3.3.C Deck Protection and Approach Slabs . . . 8-29
8.3.3.D Buried Structure Foundation Design . . . 8-29
8.3.3.E Buried Structure Wingwall and Headwall Design . . . 8-29
8.3.3.F Worker, Pedestrian and Bicycle Fall Protection . . . 8-30
8.3.3.G W-Beam Guardrail on Buried Structures (TL-3) . . . 8-30
8.3.3.H Buried Structure Seismic Design . . . 8-30
8.3.3.H.1 Seismic Loading Effects . . . 8-31
8.3.3.H.2 Load Combinations for Transient Seismic Motion . . . 8-32
8.3.3.H.3 Attenuation of Peak Ground Motion Parameters . . . 8-32
8.3.3.I Load Rating . . . 8-33
8.3.3.J Usage of Buried Structure Design Software and/or Spreadsheets . . . 8-33
8.3.3.K Buried Structure Standard Plans . . . 8-34
8.3.3.K.1 Split Boxes Structures . . . 8-37
8.3.3.K.2 Three-Sided Structures . . . 8-38

8.3.4 Materials . . . 8-39
8.3.4.A Concrete . . . 8-39
8.3.4.B Reinforcing Steel . . . 8-39
8.3.4.C Bedding and Leveling Material . . . 8-39
8.3.4.C.1 Precast Reinforced Concrete Buried Structure – Three-Sided . . . 8-39
8.3.4.C.2 Precast Reinforced Concrete Buried Structure – Split Box 8-39
8.3.4.C.3 Precast Reinforced Concrete Retaining Walls (Wingwalls) . . . 8-40
8.3.4.D Joint Sealant and External Sealing Bands . . . 8-40
8.3.4.E Corrosion . . . 8-40
8.3.4.E.1 Metal Structural Plate Structures . . . 8-40
8.3.4.E.2 Concrete Structures . . . 8-40
8.3.5 Limit States and Design Methodologies . . . 8-40
8.3.5.A Service Limit State . . . 8-40
8.3.5.A.1 Total and Differential Settlement . . . 8-40
8.3.5.A.2 Deflection and Shear Transfer . . . 8-41
8.3.5.A.3 Control of Cracking . . . 8-41
8.3.5.B Strength Limit State . . . 8-41
8.3.5.C Extreme Limit State . . . 8-41
8.3.5.D Boundary Conditions . . . 8-42
8.3.5.E Structural Modeling . . . 8-42
8.3.5.E.1 Three-Sided Structures . . . 8-42
8.3.5.E.2 Split Box Structures . . . 8-42
8.3.5.E.3 Split Box ~ Slab Structures . . . 8-44
8.3.6 Provisions for Structure Type . . . 8-44
8.3.6.A Concrete Box and Split Box Structures . . . 8-44
8.3.6.A.1 Precast Geometric Limitations . . . 8-44
8.3.6.A.2 Distribution of Live Load through Earth Fill . . . 8-46
8.3.6.A.3 Joint Design and Details . . . 8-46
8.3.6.B Concrete Three-Sided Structures . . . 8-47
8.3.6.B.1 Precast Geometric Limitations . . . 8-47
8.3.6.B.2 Distribution of Live Load through Earth Fill . . . 8-48
8.3.6.B.3 Joint Design and Details . . . 8-48
8.3.6.C Design of Metal Structural Plate Structures . . . 8-48
8.3.7 Design of Detention Vaults . . . 8-49
8.3.8 Design of Tunnels . . . 8-51
8.4 Bridge Standard Drawings . . . 8-53
8.5 Appendices . . . 8-55
Appendix 8.1-A1 Summary of Design Specification Requirements for Walls . . . 8-56
8.99 References . . . 8-59

This page intentionally left blank.

Chapter 8 Walls and Buried Structures

8.1 Retaining Walls

8.1.1 General

A retaining wall is a structure built to provide lateral support for a mass of earth or other material where a grade separation is required. Retaining walls depend either on their own weight, their own weight plus the additional weight of laterally supported material, or on a tieback system for their stability. Additional information is provided in the *Geotechnical Design Manual* chapter pertaining to retaining walls.

Standard designs for noise barrier walls (precast concrete), and geosynthetic walls are shown in the Standard Plans. The Region Design PE Offices are responsible for preparing the PS&E for retaining walls for which standard designs are available, in accordance with the *Design Manual* M 22-01. However, the Bridge and Structures Office may prepare PS&E for such standard type retaining walls if such retaining walls are directly related to other bridge structures being designed by the Bridge and Structures Office.

Structural earth wall (SE) systems meeting established WSDOT design and performance criteria have been listed as "preapproved" by the Bridge and Structures Office and the State Geotechnical Office. The PS&E for "preapproved" structural earth wall systems shall be coordinated by the Region Design PE Office with the Bridge and Structures Office, and the State Geotechnical Office, in accordance with *Design Manual* M 22-01.

The PS&E for minor non-structural retaining walls, such as rock walls, gravity block walls, and gabion walls, are prepared by the Region Design PE Offices in accordance with the *Design Manual* M 22-01, and any other design input from the Region Materials Office, or State Geotechnical Office.

Temporary retaining walls are defined as walls that are in service or have a design life of three years or less. Any retaining wall that is expected to be in service for more than three years shall be designed for seismic loading. Temporary retaining walls shall be designed in accordance with the requirements of the current editions of the LRFD-BDS and interims, WSDOT *Bridge Design Manual* including all design memorandums, and the WSDOT *Geotechnical Design Manual* chapter pertaining to retaining walls.

All other retaining walls not covered by the Standard Plans such as reinforced concrete walls with attached traffic barriers, soil nail walls, soldier pile walls, soldier pile tieback walls and all walls beyond the scope of the designs tabulated in the Standard Plans, are designed by the Bridge and Structures Office according to the design parameters provided by the State Geotechnical Office.

The State Hydraulics Office should be consulted for walls that are subject to floodwater or are located in a flood plain. The State Bridge and Structures Architect should review the architectural features and visual impact of the walls during the Preliminary Design stage. The designer is also directed to the retaining walls chapter in the *Design Manual* M 22-01 and *Geotechnical Design Manual* chapter pertaining to retaining walls, which provide valuable information on the design of retaining walls.

8.1.2 Common Types of Retaining Walls

The majority of retaining walls used by WSDOT are one of the following five types:

1. Proprietary Structural Earth (SE) Walls – *Standard Specifications* Section 6-13.
2. Geosynthetic Walls (Temporary and Permanent) – *Standard Plan* D-3 and *Standard Specifications* Section 6-14.
3. Standard Reinforced Concrete Retaining Walls - *Standard Plans* D-10.10 through D-10.45 and *Standard Specifications* Section 6-11.
4. Standard Precast Reinforced Concrete Retaining Wall – Standard Plan D-20.10 and General Special Provision 6-11.
5. Soldier Pile Walls and Soldier Pile Tieback Walls – *Standard Specifications* Sections 6-16 and 6-17.
6. Soil Nail Walls–*Standard Specifications* Section 6-15.

Other wall systems, such as secant pile or cylinder pile walls, may be used based on the recommendation of the Geotechnical Engineer. These walls shall be designed in accordance with the current LRFD-BDS.

8.1.2.A Preapproved Proprietary Walls

A wall specified to be supplied from a single source (patented, trademark, or copyright) is a proprietary wall. Walls are generally preapproved for heights up to 33 feet. The State Geotechnical Office will make the determination as to which preapproved proprietary wall system is appropriate on a case-by-case basis. The following is a description of the most common types of proprietary walls:

8.1.2.A.1 *Structural Earth Walls (SE)*

A structural earth wall is a flexible system consisting of concrete face panels or modular blocks that are held rigidly into place with reinforcing steel strips, steel mesh, welded wire, or geogrid extending into a select backfill mass. These walls will allow for some settlement and are best used for fill sections. The walls have two principle elements:

- Backfill or wall mass: a granular soil with good internal friction (i.e. gravel borrow).
- Facing: precast concrete panels, precast concrete blocks, or welded wire (with or without vegetation).

Design heights in excess of 33 feet shall be approved by the State Geotechnical Office. If approval is granted, the designer shall contact the individual structural earth wall manufacturers for design of these walls before the project is bid so details can be included in the Plans. See Bridge Standard Drawing 8.1-A2 for details that need to be provided in the Plans for manufacturer designed walls.

A list of current preapproved proprietary wall systems is provided in the *Geotechnical Design Manual*. For additional information see the retaining walls chapter in the *Design Manual* M 22-01 and *Geotechnical Design Manual* chapter pertaining to retaining walls. For the SEW shop drawing review procedure see *Geotechnical Design Manual* chapter pertaining to retaining walls.

8.1.2.A.2 *Other Proprietary Walls*

Other proprietary wall systems such as crib walls, bin walls, or precast walls, can offer cost reductions, reduce construction time, and provide special aesthetic features under certain project specific conditions.

A list of current preapproved proprietary wall systems and their height limitations is provided in the *Geotechnical Design Manual*. The Region shall refer to the retaining walls chapter in the *Design Manual* M 22-01 for guidelines on the selection of wall types. The State Geotechnical Office and the Bridge and Structures Office Preliminary Plans Unit must approve the concept prior to development of the PS&E.

8.1.2.B Geosynthetic Wrapped Face Walls

Geosynthetic walls use geosynthetics for the soil reinforcement and part of the wall facing. Use of geosynthetic walls as permanent structures requires the placement of a cast-in-place, precast or shotcrete facing. Details for construction are shown in Standard Plans D-3.09, D-3.10 and D-3.11.

8.1.2.C Reinforced Concrete Walls

Reinforced concrete walls are typically rigid gravity or semi-gravity walls as defined in LRFD-BDS Article 11.6. Semi-gravity walls are suitable for heights up to 35 feet. Standard Plans D-10.10 to D-10.45 provide details for construction and the maximum bearing pressure in soil of WSDOT designed cast-in-place semi-gravity walls. Standard Plan D-20.10 provides details for construction and the maximum bearing pressure in soil of WSDOT designed precast semi-gravity walls.

A major disadvantage of semi-gravity walls is the low tolerance to post-construction settlement, which may require use of deep foundations (shafts or piling) to provide adequate support.

8.1.2.D Soldier Pile Walls and Soldier Pile Tieback Walls

Soldier Pile Walls utilize wide flange steel members, such as W or HP shapes. The piles are usually spaced 6 to 10 feet apart. The main horizontal members are timber lagging, precast concrete lagging or cast in place concrete fascia panels which are designed to transfer the soil loads to the piles. For additional information see WSDOT *Geotechnical Design Manual* chapter pertaining to retaining walls. See Bridge Standard Drawing 8.1-A3 for typical soldier pile wall details.

8.1.2.E Soil Nail Walls

The basic concept of soil nailing is to reinforce and strengthen the existing ground by installing steel bars called “nails” into a slope or excavation as construction proceeds from the “top down”. Soil nailing is a technique used to stabilize moving earth, such as a landslide, or as temporary shoring. Soil anchors are used along with the strength of the soil to provide stability. The Geotechnical Engineer designs the soil nail system whereas the Bridge and Structures Office designs the wall fascia. See Bridge Standard Drawing 8.1-A4 for typical soil nail wall details.

8.1.3 General Design Considerations

Design of retaining walls shall be in accordance with the requirements and guidance cited herein and in the current LRFD-BDS, LRFD-SGS, WSDOT General and Bridge Special Provisions, the *Standard Specifications* M 41-10 and the *Geotechnical Design Manual* M 46-03 unless otherwise cited herein. See Appendix 8.1-A1 for a summary of design specification requirements for walls.

Seismic design of all retaining walls shall be in accordance with LRFD-BDS and Section 4.5.

All construction shall follow procedures as outlined in the WSDOT *Standard Specifications* latest edition.

The Geotechnical Engineer will provide the earth pressure diagrams and other geotechnical design requirements. Pertinent soil data will also be provided for preapproved proprietary structural earth walls (SEW), non-standard reinforced concrete retaining walls, and geosynthetic walls.

Retaining walls and their components that are in service for a maximum of 36 months are considered to be temporary. Temporary retaining walls need not be designed for the Extreme Event I Limit State.

The live load factor for Extreme Event-I Limit State load combination, γ_{EQ} as specified in the AASHTO LRFD Table 3.4.1-1 for all permanent retaining walls shall be taken equal to 0.50.

8.1.4 Design of Reinforced Concrete Retaining Walls

8.1.4.A Standard Reinforced Concrete Retaining Walls

Standard Walls are those walls for which standard designs are provided in the WSDOT *Standard Plans*.

The Standard Plan cast-in-place reinforced concrete retaining walls have been designed in accordance with the requirements of the LRFD-BDS 4th Edition 2007 and interims through 2008.

The Standard Plan precast reinforced concrete retaining walls have been designed in accordance with the requirements of the LRFD-BDS 9th Edition 2020.

The Standard Plan reinforced concrete retaining walls have not been designed for hydrostatic pressure due to water accumulating behind the wall.

Reinforced concrete retaining walls containing design parameters which exceed those used in the standard reinforced concrete retaining wall design are considered to be non-standard reinforced concrete retaining walls.

8.1.4.A.1 *Standard Cast-In-Place Reinforced Concrete Retaining Wall Types 1 through 8*

1. The design parameters used to complete the design are summarized below and in Table 8.1.4-1.
2. Extreme Event stability of the walls were based on 100 percent of the wall inertia force combined with 50 percent of the seismic earth pressure.
3. Active Earth pressure distribution was linearly distributed per Section 7.7.4.

4. Seismic Earth pressure distribution was uniformly distributed in accordance with *Geotechnical Design Manual* M 46-03, Nov. 2008 Section 15.4.2.9, and was supplemented by LRFD-BDS (Figure 11.10.7.1-1).

5. Passive Earth pressure distribution was linearly distributed. For Types 1, 2, 7, and 8 the passive earth pressure was taken over the depth of the footing. For Types 3, 4, 5, and 6 the passive earth pressure was taken over the depth of the footing and the height of the shear key.

6. The retained fill was assumed to have an angle of internal friction of 36 degrees and a unit weight of 130 pounds per cubic foot. The friction angle for sliding stability was assumed to be 32 degrees.

7. Load factors and load combinations used in accordance with LRFD-BDS Sections 3.4.1-1 and 2. Stability analysis performed in accordance with LRFD-BDS Section 11.6.3 and C11.5.5-1& 2.

8. Wall Types 1, 2, 7, and 8 have not been designed for 42-inch traffic barrier height collision forces. The archived Standard Plans D-15.10, D-15.20 and D-15.30 are no longer consistent with WSDOT Bridge and Structures Office traffic barrier height policy and shall not be used on any Standard Plan retaining wall.

Table 8.1.4-1 Standard Cast-In-Place Reinforced Concrete Retaining Wall Design Parameters

Standard Plan #	Wall Type	Effective Peak Ground Acceleration	Ka	Kp	Kae
D-10.10	Type 1	0.51g	0.24	1.5	0.43
D-10.15	Type 2	0.51g	0.24	1.5	0.43
D-10.20	Type 3	0.32g	0.36	1.5	0.94
D-10.25	Type 4	0.32g	0.36	1.5	0.94
D-10.30	Type 5	0.20g	0.36	1.5	0.55
D-10.35	Type 6	0.20g	0.36	1.5	0.55
D-10.40	Type 7	0.20g	0.24	1.5	0.30
D-10.45	Type 8	0.20g	0.24	1.5	0.30

8.1.4.A.2 *Standard Precast Reinforced Concrete Retaining Wall*

1. The design parameters used for Standard Plan D-20.10 are summarized below and in the table and General Notes provided in the Standard Plan.

2. The retained fill was assumed to have an angle of internal friction of 34 degrees and a unit weight between the range of 125 to 145 pounds per cubic foot.

3. For the footing without a key, the coefficient of sliding was based on a friction angle of 36 degrees for sliding stability considering the six inches of bedding material required to be placed under the precast footing. For the footing with a key the coefficient of friction was based on the native subgrade angle of internal friction shown in Table 8.1.4-2b and in the table provided in the Standard Plan.

4. The design for walls having a flat backslope considered a 2 ft of equivalent height of soil for vehicular surcharge loading. The design for walls having a backslope steeper than 10H:1V considered a 1 ft equivalent height of soil for vehicular surcharge loading. The unit weight of the equivalent height of soil was 125pcf.

5. For the Service, Strength, and Extreme Event I limit states, the design considered a hydrostatic pressure due to water accumulating behind the wall up to the bottom of the weep hole. For the Extreme Event II limit state, the design considered a hydrostatic pressure due to water accumulating behind the wall up to one-half the wall height "H".
6. The design considered a 200 lb lateral force applied at 42 inches above the top of the wall to account for the application of a worker fall protection system as described in Section 8.1.11.B.
7. The static and seismic active earth pressures were distributed as shown in Figure 8.1.4-1 and Figure 8.1.4-2 and applied at an angle of δ = 23 degrees. The active lateral earth pressure coefficients, Ka, are shown in Table 8.1.4-2a.
8. The seismic active earth pressure coefficient, K_{AE}, provided in the Standard Plan table considered the precast reinforced concrete wall is free to move a minimum of 1 to 2 inches laterally when under the influence of seismic loading. The Geotechnical Engineer shall determine the site-specific K_{AE} value considering the seismic conditions, slope configuration, and subsurface conditions to determine applicability of the Standard Plan.
9. The Passive earth pressure was distributed over the footing depth and where applicable, the height of the footing key. The passive lateral earth pressure coefficients, Kp, for the soil in front of the footing toe and the footing key are shown in Table 8.1.4-2b.

Table 8.1.4-2a Design Static Lateral Earth Pressure Coefficient

Standard Plan #	Wall Type	Ka
D-20.10	Type 1	0.25
	Type 2	0.25
	Type 3	0.41
	Type 4	0.41
	Type 5	0.41

Table 8.1.4-2b Design Passive Horizontal Earth Pressure Coefficient

Standard Plan #	Native Subgrade ϕ (DEG.)	Footing Toe Kp	Footing Key Kp
D-20.10	30	7.4	5.4
	34	7.4	7.4
	38	7.4	10.4

8.1.4.B Non-Standard Reinforced Concrete Retaining Walls

Differential grade concrete barriers are considered to be rigid gravity retaining walls and shall be designed in accordance with this BDM, See Section 8.1.3.

Wingwalls and headwalls are considered to be retaining walls and shall be designed in accordance with this BDM, See Section 8.1.3.

Precast reinforced concrete retaining walls shall have a 6 inch minimum thickness layer of bedding material as defined in *Standard Specification* Section 6-20.3(6)A.

8.1.4.B.1 *Bearing Resistance, Eccentricity, and Sliding Stability*

For sliding, the passive resistance in the front of the footing may be considered if the earth is more than 2 feet deep on the top of the footing and does not slope downward away from the wall. Otherwise, the passive resistance shall be ignored above the bottom of the footing for the Strength Limit States and ignored above the top of the footing for the Extreme Event Limit States

The design soil bearing pressure at the toe of the footing shall not exceed the factored soil bearing capacity supplied by the Geotechnical Engineer.

8.1.4.B.2 *Application of Lateral Loads*

The lateral loads for reinforced concrete retaining walls with a horizontal backfill shall be applied as shown in Figure 8.1.4-1.

The lateral loads for reinforced concrete retaining walls with a sloping backfill shall be applied as shown in Figure 8.1.4-2.

1. The sloped backfill can be a 2H:1V maximum slope with a limited surcharge height (broken back backfill) or a 3H:1V maximum slope with no surcharge height (infinite backfill).
2. For the broken back backfill condition, the slope angle β^* is based on the LRFD-BDS Figure C3.11.5.8.1-1.
3. The wall backfill interface friction angle is $\delta = 2/3\ \phi_f$ but not greater than β or β^* which is consistent with the Coulomb wedge theory.

8.1.4.B.3 *Application of Collision Loads*

For walls with traffic barriers constructed integral with the wall stem, the vehicular collision load shall be included in the design. To ensure that any failure due to the collision remains in the barrier section, the top of the wall stem shall have sufficient resistance to force the yield line failure pattern to remain within the barrier. The top of the wall stem shall be designed in accordance with the requirement of the LRFD-BDS Article A13.4.

As shown in Figures 8.1.4-3 and 8.1.4-4, the collision force (CT, F_t) is assumed to be distributed over the longitudinal length (L_t) at the top of the traffic barrier and is assumed to distribute downward to the top of the footing at a 45 degree angle. See LRFD-BDS Table A13.2-1 for L_t and F_t values. The distribution of the collision force in the footing shall be the distance between expansion joints.

For the Extreme Event II Limit State, the load factor, γ_p, for EH is 1.0 to account for the dynamic nature of the collision load.

8.1.4.B.4 *Wall Footing Structural Design*

Refer to Section 7.7 for additional footing structural design criteria. The General Footing Criteria provided in Section 7.7.1 shall be applicable to both retaining wall footings and leveling pads. For footings with steps, the bottom of the footing step is to be sloped no steeper than 1H:2V. Footings with 90 degree steps at the bottom of the footing shall not be permitted.

The minimum reinforcement criteria for bottom reinforcement of #6 bars at 12" centers and top reinforcement of #5 bars at 12" centers required in Section 7.7.4.F is not applicable to retaining wall footings.

The structural design of the footing shall assume a triangular or trapezoidal bearing pressure distribution in accordance with the LRFD-BDS Article 10.6.5.

When designing the transverse reinforcement located in the bottom of the footing, the contribution of the soil located over the toe of the footing shall be ignored.

When designing the transverse reinforcement located in the top of the footing, the contribution of the bearing pressure under the footing shall be ignored.

Control of cracking by distribution of reinforcement as specified in LRFD-BDS Article 5.6.7 shall be checked for the top and bottom face of the footing.

For retaining walls supported by deep foundations (shafts or piles), refer to Sections 7.7.5, 7.8, 7.9 and 7.10.

8.1.4.B.5 *Wall Stem Structural Design*

Refer to Sections 7.5.4 and 7.5.10 for additional wall stem structural design criteria.

In accordance with *Standard Specifications* Section 6-11.3(3), the Contract Plans or Special Provisions are to state whether the cast-in-place semi-gravity concrete cantilever wall may be constructed with precast concrete wall stem panels. For cast-in-place semi-gravity concrete cantilever walls with traffic barriers cast integral with the wall stem, the Contract Plans or Special Provisions are to provide explicit direction regarding whether the traffic barrier is permitted to be precast with the precast wall stem or cast-in-place after the precast wall stems are installed. When permitting the traffic barrier to be precast integral with the wall stem, the wall stem design and detailing shall account for the collision load transfer path into the wall stem.

Figure 8.1.4-1 Application of Lateral Loads for walls with a horizontal backfill

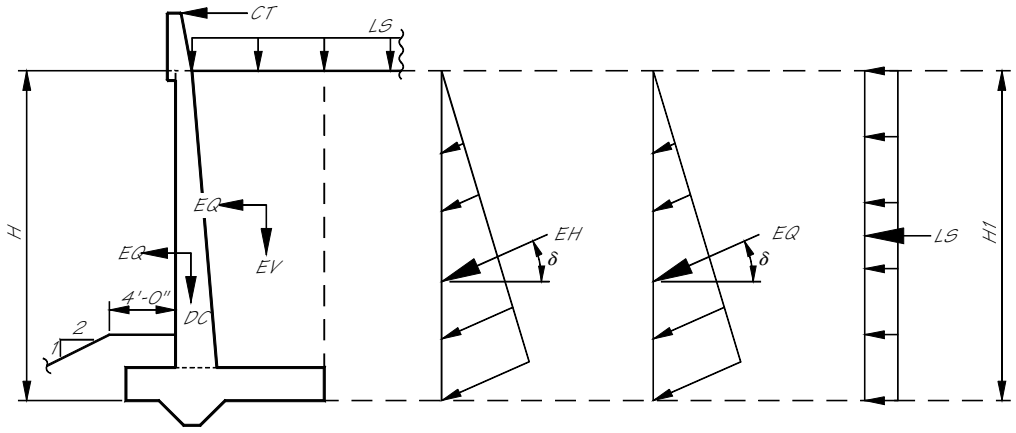

Figure 8.1.4-2 Application of Lateral Loads for walls with a sloping backfill

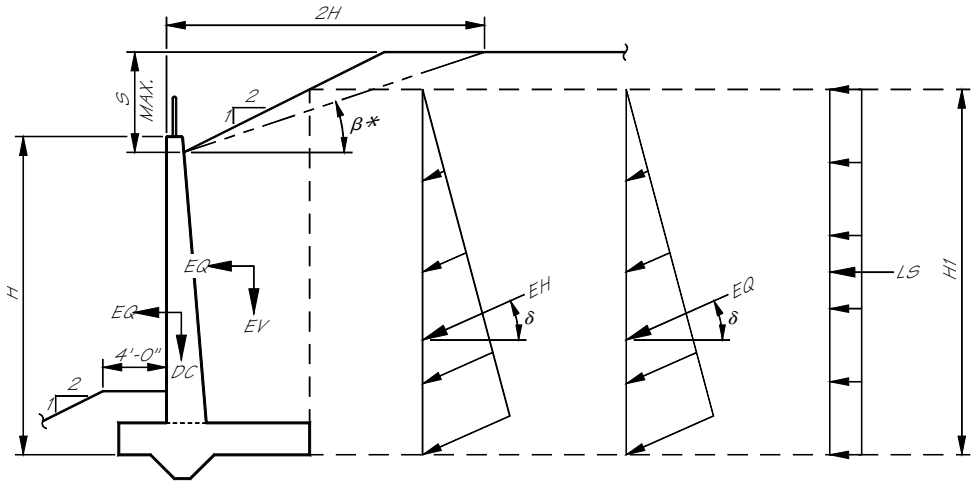

Figure 8.1.4-3 Application and Distribution of Vehicular Collision Load occurring near the midsection

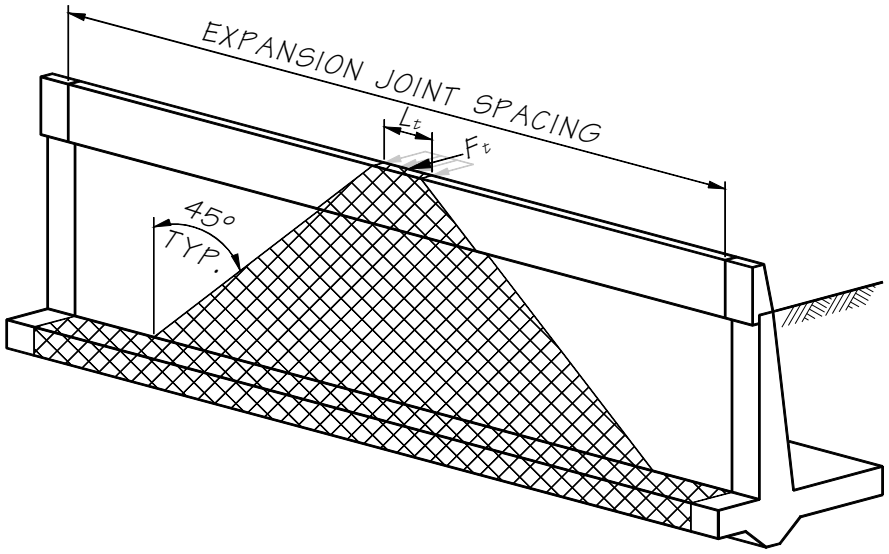

Figure 8.1.4-4 Application and Distribution of Vehicular Collision Load occurring near the end.

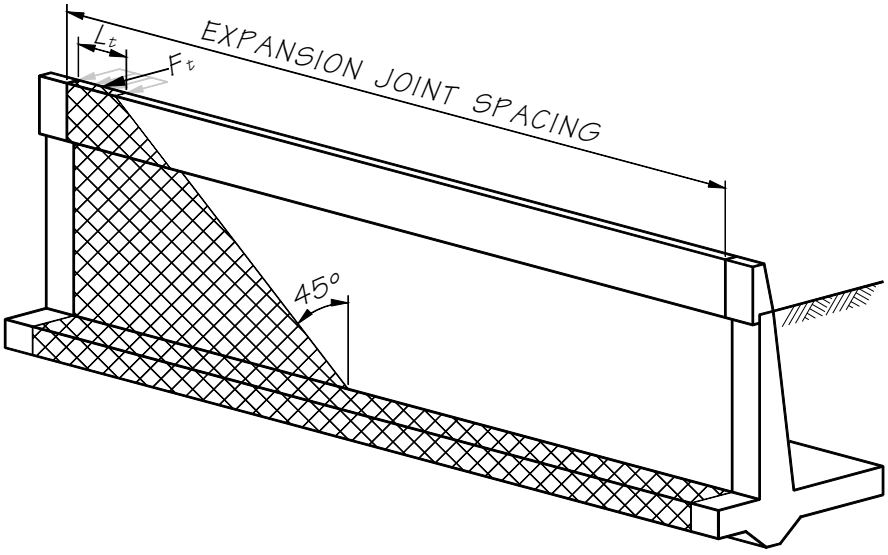

8.1.5 Design of Cantilever Soldier Pile and Soldier Pile Tieback Walls

Typical soldier pile wall details are provided in the Appendix 8.1-A3.

8.1.5.A Ground Anchors (Tiebacks)

See LRFD-BDS Section 11.9 "*Anchored Walls*". The Geotechnical Engineer will determine whether anchors can feasibly be used at a particular site based on the ability to install the anchors and develop anchor capacity. The presence of utilities or other underground facilities, and the ability to attain underground easement rights may also determine whether anchors can be installed.

The anchor may consist of bars or strands. The choice of appropriate type is usually left to the Contractor but may be specified by the designer if special site conditions exist that preclude the use of certain anchor types. In general, strands have advantages with respect to tensile strength, limited work areas, ease of transportation, and storage. However, bars are more easily protected against corrosion, and are easier to develop stress and transfer load.

The geotechnical report will provide a reliable estimate of the feasible factored design load of the anchor, recommended anchor installation angles (typically 10 degrees to 45 degrees), no-load zone dimensions, and any other special requirements for wall stability for each project.

Both the "tributary area method" and the "hinge method" as outlined in LRFD-BDS Section C11.9.5.1 are considered acceptable design procedures to determine the horizontal anchor design force. The capacity of each anchor shall be verified by testing. Testing shall be done during the anchor installation (See *Standard Specifications* Section 6-17.3(8) and *Geotechnical Design Manual* M 46-03).

1. The minimum vertical anchor spacing shall be the same as defined in LRFD-BDS Section 11.9.4.2 for the minimum horizontal anchor spacing. The horizontal anchor spacing typically follows the pile spacing of 6 to 10 feet. The vertical anchor spacing is typically 8 to 12 feet. A minimum spacing of 4 feet in both directions is not recommended because it can cause a loss of effectiveness due to disturbance of the anchors during installation.
2. For permanent ground anchors, the anchor design load, T, shall be according to LRFD-BDS. For temporary ground anchors, the anchor design load, T, may ignore extreme event load cases.
3. The anchor lock-off load is 60 percent of the controlling factored design load for temporary and permanent walls (see *Geotechnical Design Manual* chapter pertaining to retaining walls).

Permanent ground anchors shall have double corrosion protection consisting of an encapsulation-protected tendon bond length as specified in the WSDOT *General Special Provisions*. Typical permanent ground anchor details are provided in the Appendix 8.1-A3.

Temporary ground anchors may have either double corrosion protection consisting of an encapsulation-protected tendon bond length or simple corrosion protection consisting of grout-protected tendon bond length.

8.1.5.B Design of Soldier Pile (discrete vertical elements)

The soldier piles shall be designed for shear, bending, and axial stresses according to the latest LRFD-BDS and *Geotechnical Design Manual* M 46-03 design criteria. The flexural design shall be based on the elastic section modulus "S" for the entire length of the pile for all Load combinations. The flexural design of soldier piles with tiebacks shall consider the requirements of LRFD-BDS Article 6.10.8.2 and 6.10.3.2.

8.1.5.B.1 *Application of Lateral Loads*

1. Lateral loads acting on the back of the wall for the portion of the wall located above the base of excavation, are applied over an effective width equal to the center-to-center pile spacing. These lateral loads result from horizontal earth pressure, live load surcharge, seismic earth pressure, or any other applicable load.
2. Lateral loads acting on the back of the pile for the portion of the pile located below the base of excavation, are applied over an effective width equal to the shaft diameter. These lateral loads result from horizontal earth pressure, seismic earth pressure or any other applicable load.
3. Passive earth pressure is applied over an effective width equal to the smaller of three times the shaft diameter or the center-to-center pile spacing.

8.1.5.B.2 *Determining Depth of Pile Embedment*

The depth of embedment of soldier piles shall be the maximum embedment as determined from the following;

1. 10 feet
2. As recommended by the Geotechnical Engineer of Record
3. As required for skin friction resistance and end bearing resistance.
4. As required to satisfy factored horizontal force equilibrium and factored moment equilibrium about the bottom of the soldier pile for cantilever soldier piles without permanent ground anchors.
5. As required to satisfy factored moment equilibrium of factored lateral force about the bottom of the soldier pile for soldier piles with permanent ground anchors.

8.1.5.B.3 *Soldier Pile Shaft Backfill*

Specify controlled density fill (CDF, 145 pcf) or pumpable lean concrete (lean concrete Type 1) for the full height of the soldier pile shaft when shafts are anticipated to be excavated and concrete placed in the dry.

Specify pumpable lean concrete (lean concrete Type 1) for the full height of the soldier pile shaft when shafts are anticipated to be excavated and concrete placed in the wet.

Specify Class 4000P in the embedded portion of the shaft for soldier pile walls that support large vertical loads such as bridge foundations or high permanent ground anchor loads. Class 4000P shall not extend above the bottom of the lagging or permanent fascia.

8.1.5.C Design of Lagging

Lagging for soldier pile walls, with and without permanent ground anchors, may be comprised of timber, precast concrete, or steel. The expected Service Life of timber lagging is 20 years which is less than the 75-year Service Life of structures designed in accordance with LRFD-BDS.

The Geotechnical Engineer will specify when lagging shall be designed for an additional 250 psf surcharge due to temporary construction load or traffic surcharge. If construction operations are likely to occur above and behind the soldier pile wall alignment, the lagging shall be designed for an additional 250 psf surcharge due to temporary construction load. The lateral pressure transferred from a moment slab shall be considered in the design of soldier pile walls and laggings.

All lagging support details shall be shown in the Contract Plans including unique supports details for wall angle points and lagging adjacent to other structures such as culverts, bridge abutments and curtain walls.

8.1.5.C.1 *Temporary Timber Lagging*

Temporary lagging is based on a maximum 36-month Service Life before a permanent fascia is applied over the lagging. The wall Design Engineer shall review the Geotechnical Recommendations or consult with the Geotechnical Engineer regarding whether the lagging may be considered as temporary as defined in *Standard Specifications* Section 6-16.3(6). Temporary timber lagging shall be designed by the contractor in accordance with *Standard Specifications* Section 6-16.3(6)B.

8.1.5.C.2 *Permanent Lagging*

Permanent lagging shall be designed for all lateral loads that could occur during the life of the wall in accordance with LRFD-BDS Sections 11.8.5.2 and 11.8.6 for simple spans without soil arching. A reduction factor to account for soil arching effects may be used if permitted by the Geotechnical Engineer.

Timber lagging shall be designed in accordance with LRFD-BDS Section 8.6. The size effect factor (*CFb*) should be considered 1.0, unless a specific size is shown in the wall plans. The wet service factor (*CMb*) should be considered 0.85 for a saturated condition at some point during the life of the lagging. The load applied to lagging should be applied at the critical depth. The design should include the option for the contractor to step the size of lagging over the height of tall walls, defined as walls over 15 feet in exposed face height.

Timber lagging designed as a permanent structural element shall consist of treated Douglas Fir-Larch, grade No. 2 or better. Hem-fir wood species, due to the inadequate durability in wet condition, shall not be used for permanent timber lagging. Permanent lagging is intended to last the design life cycle (75 years) of the wall. Timber lagging does not have this life cycle capacity but can be used when both of the following are applicable:

1. The wall will be replaced within a 20 year period or a permanent fascia will be added to contain the lateral loads within that time period.

   And,

2. The lagging is visible for inspections during this life cycle.

8.1.5.D Design of Fascia Panels

Cast-in-place concrete fascia panels shall be designed as a permanent load carrying member in accordance with LRFD-BDS Section 11.8.5.2. Lateral earth pressure loads shall not be reduced for soil arching. For walls without permanent ground anchors the minimum structural thickness of the fascia panels shall be 9 inches. For walls with permanent ground anchors the minimum structural thickness of the fascia panels shall be 14 inches. Architectural treatment of concrete fascia panels shall be indicated in the plans.

Concrete strength shall not be less than 4,000 psi at 28 days.

The wall fascia shall extend below ground the maximum of the following;

1. a 2 feet minimum below the finish ground line adjacent to the face of the wall.
2. 3 feet minimum below the lowermost PGA.
3. 2 feet minimum below the scour elevation, unless a greater depth is specified.

When concrete fascia panels are placed on soldier piles, a generalized detail of lagging with strongback (see Bridge Standard Drawing 8.1-A3-5) shall be shown in the plans. This information will assist the contractor in designing formwork that does not overstress the piles while concrete is being placed.

Precast concrete fascia panels shall be designed to carry all loads that could occur during the life of the wall. Lateral earth pressure loads shall not be reduced for soil arching. When timber lagging (including pressure treated lumber) is designed to be placed behind a precast element, conventional design practice is to assume that lagging will eventually fail and the load will be transferred to the precast panel. If another type of permanent lagging is used behind the precast fascia panel, then the design of the fascia panel will be controlled by internal and external forces other than lateral pressures from the soil (weight, temperature, Seismic, Wind, etc.). The connections for precast panels to soldier piles shall be designed for all applicable loads and the designer should consider rigidity, longevity (to resist cyclic loading, corrosion, etc.), and load transfer.

See Section 5.1.1 for use of shotcrete in lieu of cast-in-place conventional concrete for soldier pile fascia panels. Shotcrete fascia panels may not be suitable in areas where the fascia will be exposed to chlorides. If the fascia may be exposed to chlorides, the reinforcement shall be corrosion resistant and the reinforcement clear cover shall be increased.

8.1.6 Design of Structural Earth Walls

Use of structural earth walls in marine environments or areas having a soil chemistry or water chemistry that is considered to be aggressive or corrosive shall not be permitted without the approval of the State Geotechnical Engineer and the State Bridge and Structures Engineer.

Use of structural earth walls in areas of full or periodic freshwater inundation shall meet the following criteria.

1. Modular block wall facings shall not be used unless the project specific assessment criteria and approval as specified in the *Geotechnical Design Manual* is met.
2. Welded wire faced structural earth walls shall not be located below the 100 year mean recurrence interval water surface.

3. The soil and water chemistry shall meet the nonaggressive criteria as described in LRFD-BDS Section 11.10.6.4.2.
4. Free draining backfill material shall be used below the expected high water elevation.
5. The number of weep holes shall be increased beyond that required for a standard design.

8.1.6.A Preapproved Proprietary Structural Earth Walls

Structural earth (SE) wall systems meeting established WSDOT design and performance criteria have been listed as "pre-approved" by the Bridge and Structures Office and the State Geotechnical Office. A list of current pre-approved proprietary wall systems and their limitations is provided in the *Geotechnical Design Manual*. For the SE wall shop drawing review procedure, see the *Geotechnical Design Manual*.

8.1.6.B Non-Preapproved Proprietary Structural Earth Walls

Structural earth walls that exceed the limitations as provided in the *Geotechnical Design Manual* are considered to be non-preapproved. Use of non-preapproved structural earth walls shall require the approval of the State Geotechnical Engineer and the State Bridge and Structures Engineer.

8.1.7 Design of Geosynthetic Walls

8.1.7.A Standard Geosynthetic Wrapped Face Walls

Standard Walls are those walls for which standard designs are provided in the WSDOT *Standard Plans*.

The design criteria for Standard Plan D-3.09 is provided in the *Geotechnical Design Manual*.

Details for construction are given in the *Standard Plans Manual* Section D.

The width "w" of the precast panels as defined in Standard Plan D-3.11 is to be shown on the plan sheets and should be selected considering the architectural requirements for the wall.

8.1.7.B Non-Standard Geosynthetic Walls

The fascia for non-standard geosynthetic wrapped face walls shall be designed for forces such as, inertia forces on the fascia due to a seismic event, external soil pressure not contained within the geosynthetic wrapped face wall, forces from elements attached to the fascia, and applicable wind loads. If a dowel connection similar to that shown in Standard Plan D-3.10 is utilized, the connection shall be designed considering the following.

1. The dowel connection shall be designed considering the shear friction pullout of the dowel from the soil in the reinforced soil zone. The contribution of passive soil bearing resistance on the hooked portion of the dowel shall be neglected.
   A. The friction coefficient for the soil against steel shall be 0.4. This value is based on the F* value provided in LRFD-BDS Figure 11.10.6.3.2-2 for smooth steel strips.
   B. The surface area of the dowel utilized for shear friction pullout shall be 2/3 of the 75 year design life corroded surface area.

2. The dowel connection design shall consider other failure mechanisms as well such as dowel tension and shear failure, pullout from the fascia, crushing of the concrete fascia, etc.

Fascia having a thickness greater than 6 inches shall have 2 mats of vertical and horizontal reinforcement placed in two parallel layers.

8.1.8 Design of Soil Nail Walls

Soil nail walls shall be designed in accordance with LRFD-BDS Section 11.12.

The seismic design parameters shall be determined in accordance with the most current edition of the AASHTO *Guide Specifications for LRFD Seismic Bridge Design* (LRFD-SGS). Typical soil nail wall details are provided in Appendix 8.1-A4.

Design of the cantilevered portions of the soil nail wall facing which typically occurs at the top, bottom, or ends of the wall shall be in accordance with the requirements of LRFD-BDS Section 11.6 for conventional retaining walls.

8.1.9 Design of Shaft Walls

Shaft retaining walls are often referred to as cylinder pile walls, secant pile walls, or tangent pile walls. This wall type may be comprised of closely spaced structural concrete shafts or closely spaced structural concrete shafts with interlocking or tangent non-structural shafts.

8.1.10 Scour of Retaining Walls

The foundation for all walls constructed along rivers and streams shall be evaluated during design by the Hydraulics Engineer for total scour in accordance with LRFD-BDS and Hydraulic Engineering Circular No. 23 (HEC-23). The bottom of the wall foundation and bottom of wall elements such as, the fascia panel, lagging, leveling pad, footing, pile cap or shaft cap shall be located a minimum of 2 feet below the total scour at the check flood elevation in accordance with the *Geotechnical Design Manual* unless a greater depth is otherwise specified.

In situations where scour (e.g., due to wave or stream erosion) can occur in front of the wall, the bottom of the wall foundation (e.g., structural earth or Geosynthetic wall leveling pad, concrete wall spread footing, the cap for pile or shaft supported walls), and the bottom of fascia panel or lagging, shall meet the minimum embedment requirements relative to the total scour elevation in front of the wall.

At any location where a retaining wall or reinforced slope can be in contact with water (such as a culvert outfall, ditch, wetland, lake, river, or floodplain), there is a risk of scour at the toe. The wall designers shall address this risk, based on the Hydraulics Engineer's assessment of the total scour potential at the wall site.

Total Scour includes the amount of streambed vertical elevation drop at a given location due to the removal of streambed material caused by flowing water and the effects of lateral migration. In accordance with LRFD-BDS Section 3.7.5 and Section 2.6.4 consequences of changes in foundation conditions (due to total scour) shall be considered at Extreme Event, Strength, and Service Limit States.

Retaining walls or portions of retaining walls that are located within the total scour at scour check flood line of a stream shall be designed to resist scour as shown in Figures 8.1.10-1 and 8.1.10-2.

Alternatives for designing retaining walls adjacent to bridge ends for scour and lateral migration could include:

1. Increasing bridge span lengths or number of spans to move any associated retaining walls beyond the total scour at scour check flood line.
2. Including revetment or scour countermeasure designs at the bridge ends, and obtaining the permits required for these features. See Figure 8.1.10-3.
   A. All revetement or scour countermeasures shall be designed and constructed in accordance with the most current version of the HEC-23.
   B. The estimated scour groundline above the scour countermeasure shall extend from the top of the scour countermeasure at an angle equal to the angle of repose. The bottom of wall foundation or element shall be located a minimum of 2 feet below the estimated scour groundline as shown in Figure 8.1.10-3.

Retaining walls associated with Bent-Type Abutments as shown in Figure 7.5.1-4, Isolated Abutments as shown in Figure 7.5.1-5, and Abutments Supported by MSE walls as shown and described in Section 7.5.2, shall be designed for total scour at the design flood. For these situations, the bottom of the retaining wall element or foundation shall be located a minimum of 2 feet below the total scour at scour check flood line as shown in Figures 8.1.10-1 and 8.1.10-2. The permissible modifications to the location of the bottom of wall foundation or element due to the addition of revetments or scour countermeasures does not apply to these design scenarios.

Figure 8.1.10-1 Scour without Lateral Migration

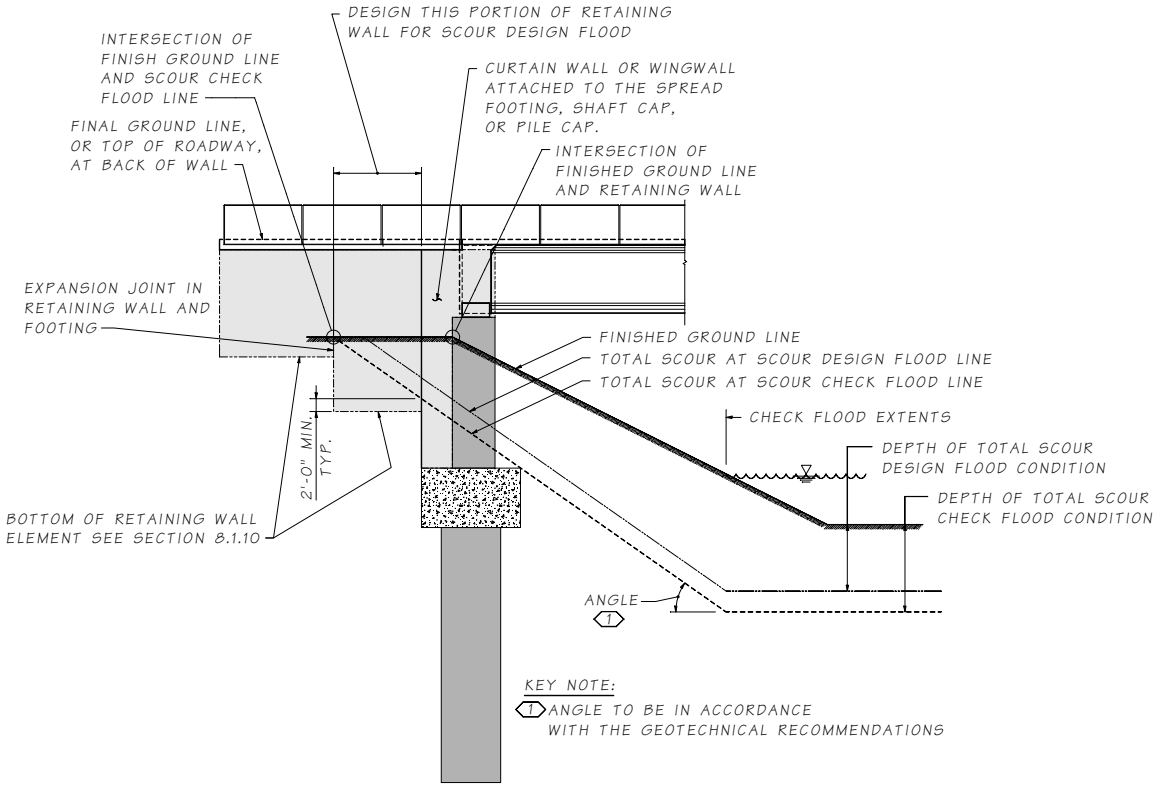

Figure 8.1.10-2 Scour with Lateral Migration

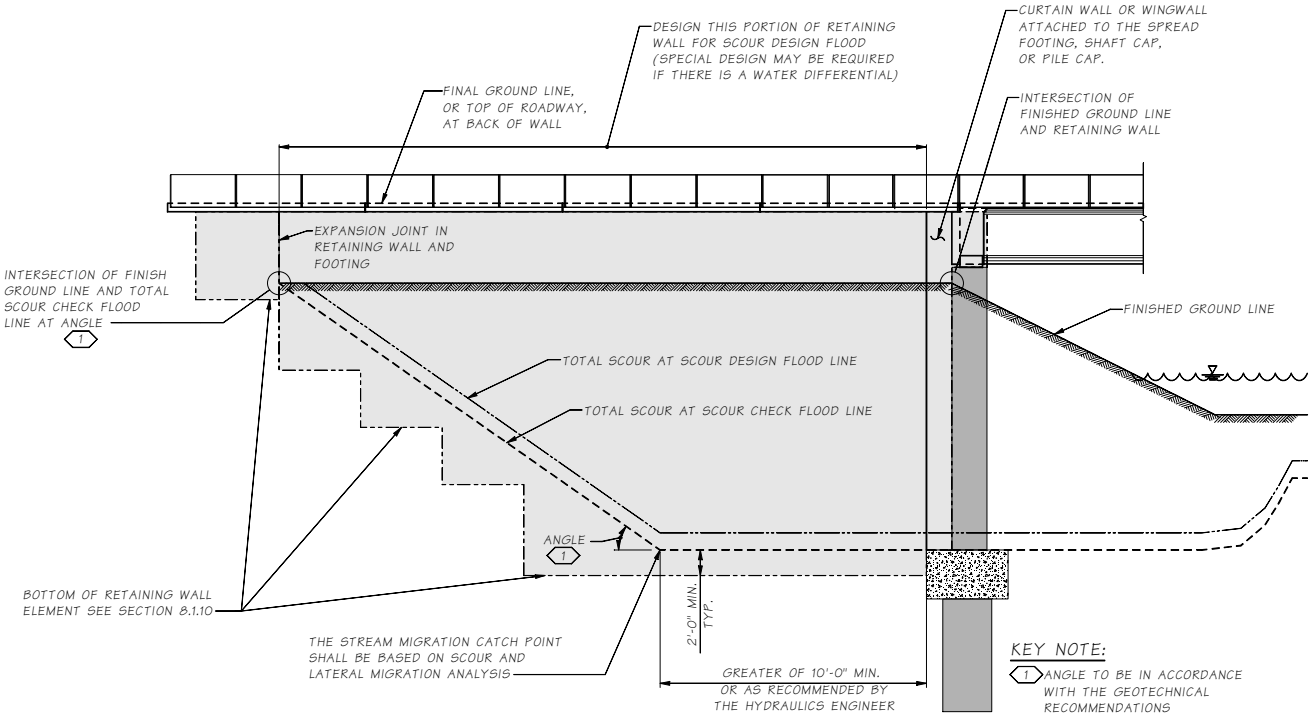

Figure 8.1.10-3 Scour with Lateral Migration and Scour Countermeasures

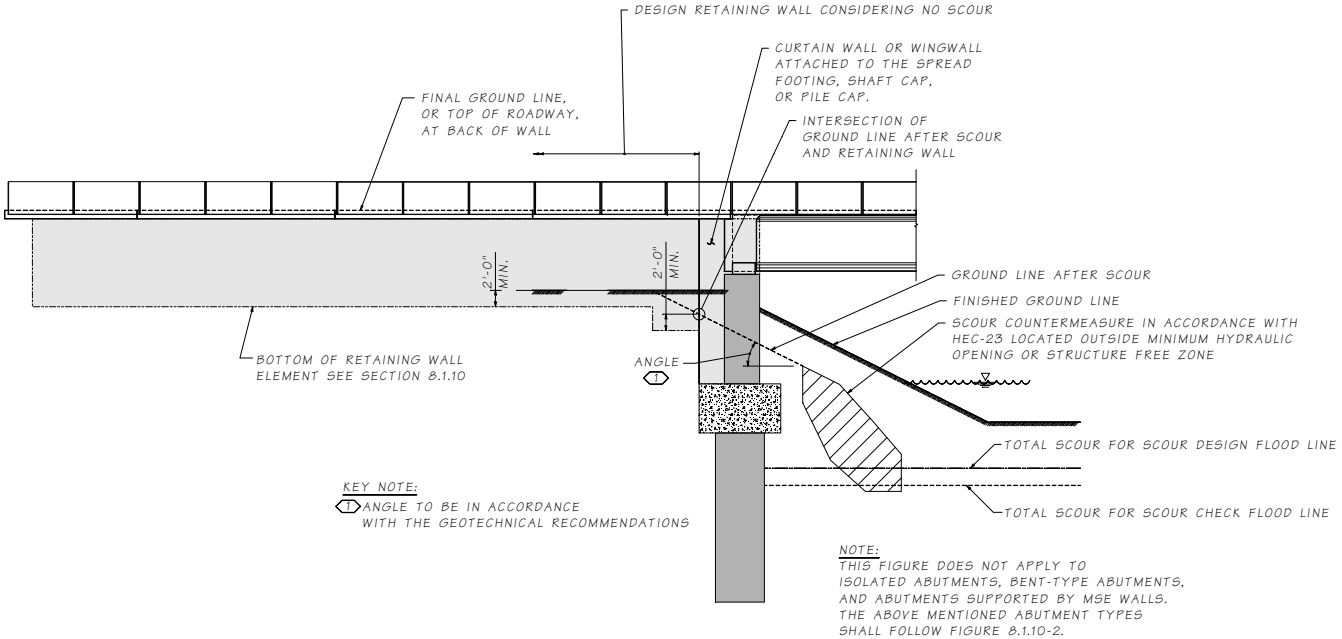

8.1.11 Miscellaneous Items

8.1.11.A Architectural Finishes and Top of Wall Profile

Approval by the State Bridge and Structures Architect is required on all retaining wall aesthetics, including finishes, materials, and configuration.

8.1.11.B Worker Fall Protection

For retaining walls with exposed wall heights of 4 feet or more, worker fall protection shall be provided in accordance with WAC 296-880 and as described in the *Design Manual* Chapter 1060.

For retaining walls with a fascia, the worker fall protection shall be located directly on top of the fascia or attached to the back face of the fascia. For retaining walls without a fascia, the worker fall protection shall be located within 6 inches of the face of the wall.

Worker fall protection shall be required regardless of the location of a traffic barrier placed behind the wall, unless the traffic barrier has a minimum height of 3'-6" and is either a moment slab traffic barrier located on top of the wall or a traffic barrier constructed integral with the top of the wall.

The following *Standard Plans* are designed and detailed to meet worker fall protection requirements:

- L-5.10 Bridge Railing Type Chain Link Pile Rail
- L-5.15 Cable Rail

Other Standard Plan fence types are not considered acceptable worker fall protection systems.

8.1.11.C Pedestrian and Bicycle Railings for Fall Protection

Fall protection systems that are intended to be used by the public or intended to provide a physical guide for pedestrians and bicyclists to minimize the likelihood of a pedestrian or bicyclist falling over the system shall be designed in accordance with Chapter 13 of the LRFD-BDS.

Pedestrian and bicycle railings for fall protection shall be located as described above for worker fall protection.

8.1.11.D Drainage

Drainage features shall be detailed in the Plans.

All retaining walls shall have concrete gutters constructed behind the back of the wall unless a moment slab traffic barrier is located on top of the wall, a traffic barrier is attached to the top of the wall, or a sidewalk is located immediately behind the wall.

Permanent drainage systems shall be provided to prevent hydrostatic pressures developing behind the wall. A cut that slopes toward the proposed wall will invariably encounter natural subsurface drainage. Vertical chimney drains or prefabricated drainage mats can be used for normal situations to collect and transport drainage to a weep hole or pipe located at the base of the wall. Installing horizontal drains to intercept the flow at a distance well behind the wall may control concentrated areas of subsurface drainage (see *Geotechnical Design Manual*).

All reinforced concrete retaining walls shall have 3-inch diameter weepholes located 6 inches above final ground line and spaced about 12 feet apart. In case the vertical

distance between the top of the footing and final ground line is greater than 10 feet, additional weepholes shall be provided 6 inches above the top of the footing. See Figure 7.5.10-1.

Weepholes can get clogged up or freeze up, and the water pressure behind the wall may start to increase. In order to keep the water pressure from building, it is important to have well draining gravel backfill and underdrains. Appropriate details must be shown in the Plans.

All reinforced concrete retaining walls, wingwalls, headwalls, semi-gravity, and gravity walls shall have a vertical layer of gravel backfill for walls placed behind the wall for a distance equal to the width of the footing heel or 3 feet minimum. See Standard Plan D-4.

Backfill for wall, underdrain pipe and gravel backfill for drain are not included in the bridge quantities. The size of the underdrain pipe should not be shown on the bridge plans as this is a Design PE Office item and is subject to change during the design phase. If it is necessary to excavate existing material for the backfill, then this excavation shall be a part of the bridge quantities for "Structure Excavation Class A Incl. Haul".

8.1.11.E Expansion, Contraction and Construction Joints

Odd panels for all types of walls shall normally be made up at the ends of the walls. All expansion, contraction and construction joints shall be shown in the plan sheets and are typically shown on the elevation.

Precast concrete retaining wall units (stem and footing) shall be connected with shear keys in accordance with *Standard Specifications* Section 6-11.3(3), grouted shear keys, ship lap joints, or weld tie joints. All joints shall be covered with a 1 foot wide sealing band on the retained soil side of the wall. The sealing band shall extend from the bottom of the footing to the finished ground line behind the wall.

8.1.11.E.1 *Expansion Joints*

For cast-in-place construction, a minimum of ½ inch premolded filler should be specified in the expansion joints.

For semi-gravity and rigid gravity walls, expansion joint spacing in the wall stem shall be a maximum of 60 feet on centers. For semi-gravity and rigid gravity walls constructed with a traffic barrier attached to the top, expansion joint spacing in the wall stem shall be consistent with the length determined to be adequate distribution of the traffic collision loading.

For counterfort semi-gravity walls, expansion joint spacing in the wall stem shall be a maximum of 32 feet on centers.

For soldier pile and soldier pile tieback walls with concrete fascia panels, expansion joint spacing should be 24 to 32 feet on centers.

Expansion joints in cast-in-place footings shall align with the expansion joints in the wall stem and shall be spaced at a distance determined by the design engineer.

Expansion joints in footings shall be provided at the interface between the retaining wall footing and the bridge abutments and where the substructure type changes such as locations where spread footing to pile footing occurs. In these cases, the footing shall be interrupted by a ½ inch premolded expansion joint through both the footing and the wall stem.

8.1.11.E.2 *Contraction Joints*

Contraction joints shall be spaced at a maximum of 30 feet for wall stems with expansion joints spaced at intervals exceeding 32 feet.

8.1.11.E.3 *Construction Joints*

Construction joints are only permitted in the footing. The maximum spacing of construction joints in the footing shall be 120 feet. The footing construction joints shall have a 6 inch minimum offset from the expansion or contraction joints in the wall stem.

8.1.11.F Detailing of Standard Reinforced Concrete Retaining Walls

1. In general, the "H" dimension shown in the retaining wall Plans should be in foot increments. Use the actual design "H" reduced to the next lower even foot for dimensions up to 3 inches higher than the even foot.

   Examples: Actual height = 15′-3″, show "H" = 15′ on design plans
   Actual height > 15′-3″, show "H" = 16′ on design plans

   For walls that are not of a uniform height, "H" should be shown for each segment of the wall between expansion joints or at some other convenient location. On walls with a steep slope or vertical curve, it may be desirable to show 2 or 3 different "H" dimensions within a particular segment. The horizontal distance should be shown between changes in the "H" dimensions.

   The value for "H" shall be shown in a block in the center of the panel or segment. See Example, Figure 8.1.10-1.

2. Follow the example format shown in Figure 8.1.11-1.
3. Calculate approximate quantities using the Standard Plans.
4. Wall dimensions shall be determined by the designer using the Standard Plans.
5. Do not show any details given in the Standard Plans.
6. Specify in the Plans all deviations from the Standard Plans.
7. Do not detail reinforcing steel, unless it deviates from the Standard Plans.
8. For pile footings, use the example format with revised footing sizes, detail any additional steel, and show pile locations. Similar plan details are required for footings supported by shafts.

8.1.11.G Embankment Widening at End of Wall

The minimum clearances for the embankment at the ends of all wall types shall be as indicated on Standard Plans A-50.10 through A-50.40.

8.1.11.H Wall Face Embedment

At the face of the wall, all retaining walls shall have a 10H:1V or flatter horizontal bench at least 4 feet wide.

The face of all retaining walls shall have a 2 feet minimum embedment depth or as required for scour, or as required by the *Geotechnical Design Manual* or as required by the Geotechnical Engineer. The embedment depth shall also meet the requirements of LRFD-BDS 11.10.2.2 and Table C11.10.2.2-1.

8.2 Noise Barrier Walls

8.2.1 General

Design of noise barrier walls shall be based on the requirements and guidance cited herein and in the current LRFD-BDS, LRFD-SGS, WSDOT *General & Bridge Special Provisions* and the WSDOT *Standard Specifications* unless otherwise cited herein.

Details for construction of the Standard Plan Noise Barrier Walls may be found in Standard Plan D-2.04 through D-2.68 and *Standard Specifications* Section 6-12.

Noise barrier walls are primarily used in urban or residential areas to mitigate noise or to hide views of the roadway. Common types, as shown in the Standard Plans, include cast-in-place concrete panels (with or without traffic barrier), precast concrete panels (with or without traffic barrier), and masonry blocks.

Acceptance by the State Bridge and Structures Architect is required on all noise barrier wall aesthetics, including finishes, materials, configuration, and top of wall profile.

Noise Barrier Walls either exposed to traffic, attached to a barrier, or within the clear zone require roadside safety hardware considerations and should be designed and detailed accordingly.

8.2.2 Loads

Noise barrier walls and their components shall be designed for all applicable loads defined in the current LRFD-BDS Chapter 3.

Wind loads and on noise barriers shall be as specified in Chapter 3.

Seismic load shall be as follows:

The effect of earthquake loading on noise barrier walls shall be investigated using the Extreme Event I limit states of LRFD-BDS Table 3.4.1-1 with the load factor $\gamma_p = 1.0$.

Seismic loads shall be taken to be horizontal design force effects determined in accordance with the LRFD-BDS provisions of Article 4.7.4.3.3 on the basis of the elastic response coefficient, C_{sm}, specified in Article 3.10.4 and BDM Section 4, and the dead load of sound barrier. The seismic design force effects for connections shall be determined by dividing the force effects resulting from elastic analysis by the response modification factor, R, specified in Table 8.2-1.

Table 8.2-1 Response Modification Factors, R

Connection	R
Monolithic connection	1.0
Connection of precast wall to bridge barrier	0.3
Connection of precast wall to retaining wall or moment slab barrier	0.5
Connection of precast wall to shaft	0.8

8.2.3 Design

8.2.3.A Standard Plan Noise Barrier Walls

1. Noise Barrier Walls detailed in Standard Plans D-2.36 and D-2.46 have been designed in accordance with the requirements of the LRFD-BDS, 6th Edition 2012 and interims through 2013, and the requirements and guidance cited herein:

   A. Load factors and load combinations for the design of all structural elements are in accordance with LRFD-BDS Tables 3.4.1-1 and 3.4.1-2.

   B. Seismic design is in accordance with LRFD-BDS Article 3.10.2.1, considering site classes B, C, D, and E and the following:

      i. Peak seismic ground acceleration coefficient on Rock (Site Class B).

         1. PGA = 0.45g for Western Washington

         2. PGA = 0.19g for Eastern Washington

      ii. Horizontal response spectral acceleration coefficient at 0.2-sec period on rock (Site Class B).

         1. S_s = 1.00 for Western Washington

         2. S_s = 0.43 for Eastern Washington

      iii. Horizontal response spectral acceleration coefficient at 1.0-sec period on rock (Site Class B).

         1. S_1 = 0.33 for Western Washington

         2. S_1 = 0.15 for Eastern Washington

      iv. Modal analysis was performed for the first four periods. The elastic seismic response coefficient C_{sm} was computed for each modal period in accordance with LRFD-BDS Article 3.10.4.2 and all four C_{sm} coefficients were combined through the SRSS method.

      v. The resultant seismic force is considered to act at a height of 0.71H above the top of the shaft, where H is the total height measured from the top of the panel to the top of the shaft.

   C. Wind loads are computed in accordance with LRFD-BDS Article 15.8.2 considering surface conditions characterized as “Sparse Suburban”. The 50 year return period maximum wind velocity, as determined from LRFD-BDS Figure 15.8.2-1, is 100 mph for Western Washington and 80 mph for Eastern Washington.

D. Drilled shaft foundations are designed for earth pressure distributions as shown in LRFD-BDS Figure 3.11.5.10-1 considering the following:

   i. Shaft depth, D1

      1. 2H:1V fore-slope and a flat backslope
      2. Angle of internal friction = 32 degrees
      3. Soil unit weight = 125pcf
      4. Corresponding K_p = 1.5
      5. Corresponding K_a = 0.28

   ii. Shaft depth, D2

      1. 2H:1V fore-slope and a flat backslope
      2. Angle of internal friction = 38 degrees
      3. Soil unit weight = 125pcf
      4. Corresponding K_p = 2.3
      5. Corresponding K_a = 0.22

   iii. The passive earth pressure distribution was assumed to start at the finished grade. However, the uppermost two feet of passive earth pressure was neglected, resulting in a trapezoidal passive earth pressure distribution.

   iv. In accordance with LRFD-BDS Table 11.5.7-1 and Article 11.5.8, the resistance factor applied to the passive earth pressure is as follows:

      1. For the Strength Limit State, the resistance factor is taken as 0.75.
      2. For the Extreme Event Limit State, the resistance factor is taken as 1.0.

E. Drilled shaft foundations are designed for an equivalent static traffic impact load of 10 kips.

F. The traffic barrier shown in Standard Plan D-2.46 could be either precast or cast-in-place The concrete barrier shall be MASH compliant with a railing test level of TL-4 or less.

G. These Standard Plan noise barrier walls have not been designed to accommodate a soil differential between the front and back of the wall panel.

8.2.3.B Non-Standard Noise Barrier Walls

Noise barrier walls containing design parameters which exceed those used in the standard noise barrier wall design shall be considered to be non-standard.

All noise barrier walls which will be mounted on existing structures, supported by existing structures, or constructed as part of a new structure are considered to be non-standard and shall be evaluated by the Bridge and Structures Office and the State Geotechnical Office.

1. Noise Barrier Walls on Bridges and Retaining Walls

   A. For noise barrier walls located on bridges, the total height, as measured from the top of bridge deck to the top of the noise barrier wall, shall be limited to 8′-0″.

   B. For noise barrier walls located on retaining walls, the total height, as measured from the top of roadway or grade at the top of the retaining wall to the top of the noise barrier wall, shall be limited to 14′-0″.

   C. Cast-in-place noise barrier walls constructed with self-consolidating concrete and precast concrete noise barrier walls and shall conform to the following requirements.

      - Minimum thickness of the wall stem shall be 7 inches.
      - Minimum concrete clear cover on each face shall be 2 inches.
      - Both vertical and horizontal reinforcement shall be placed in two parallel layers.

   D. Cast-in-place noise barrier walls constructed with conventional concrete shall conform to the following requirements.

      - Minimum thickness of the wall stem shall be 8 inches.
      - Minimum concrete clear cover on each face shall be 2 inches.
      - Both vertical and horizontal reinforcement shall be placed in two parallel layers.
      - Minimum clear distance between parallel layers of reinforcement shall be 2½ inches.

8.3 Buried Structures

Buried Structure is a specific term for a Structure built or assembled inside an excavation employing embankment or trench methods, which works with granular backfill to derive its support, from both the Structure and the surrounding soil, through soil-structure interaction. As such, this type of Structure necessitates a differentiation from the term 'culvert' as defined in *Standard Specifications*, Section 7-02, even when the Structure is conveying hydraulics.

Buried Structure types considered herein consist of metal structural plate pipes, arches, and boxes, along with composite concrete filled arches, cast-in-place and precast reinforced concrete arches, boxes, split boxes, and three-sided Structures.

8.3.1 General Policy

Cast-in-place or precast reinforced concrete, composite concrete filled arch, and metal structural plate are authorized materials for Buried Structures. Use of alternate materials, other than reinforced concrete, composite concrete filled arch, and metal structural plate for Buried Structures having a Structural Clear Span of 20.0 feet and greater, requires approval by the State Geotechnical Engineer and the State Bridge Design Engineer. All Buried Structures, regardless of material, shall be designed for a minimum Service Life of 75 years.

Consideration must be given to the degradation of Buried Structure materials resulting from corrosive and abrasive conditions. For hydraulic Structures, the invert receives the largest impact due to corrosion and abrasion; however, the surrounding soil properties and groundwater may impact other portions of Buried Structures.

The use of different metals, protective linings, increased gauge thickness, or a combination of these methods are common approaches used for metal Structures, and additional concrete cover or protective coatings over reinforcing steel are common approaches used for concrete Structures to ensure the Service Life criteria is met.

The Structural Clear Span of a Buried Structure shall be used to determine the Buried Structure Class. When supporting a Roadway, the Structural Clear Span shall be defined as the widest horizontal opening from interior face to interior face of the end walls, as measured parallel to Roadway centerline. When not supporting a Roadway, the Structural Clear Span shall be defined as the widest horizontal opening from interior face to interior face of the end walls, as measured perpendicular to the Buried Structure centerline.

Structure Class	Structural Clear Span
Class 1	Less than 20.0 feet
Class 2	20.0 feet and greater

Buried Structures can be even further classified using the Structure's expected dynamic response, categorized as either a Flexible or Rigid Structure type. Flexible Buried Structures include metal structural plate pipes, arches, and boxes as defined in Section 8.3.6.C. Rigid Buried Structures include composite concrete filled arches, cast-in-place and precast reinforced concrete arch, box, split box, and three-sided Structures. Precast, prestressed concrete elements would also be considered Rigid with respect to Buried Structures.

When supporting a Roadway, the Fill Depth shall be defined as the total backfill and surfacing depth above the top of the Buried Structure. When not supporting a Roadway, the Fill Depth shall be defined as the total backfill above the top of the Buried Structure.

Buried Structures conveying vehicles, or pedestrians shall consider the applicability of safety systems such as, but not limited to, fire life-safety elements, ventilation, lighting, emergency egress, traffic control, and communications in accordance with Section 8.3.8.

Architectural finishes shall be coordinated with the State Bridge and Structures Architect in accordance with the WSDOT *Design Manual*, and as otherwise shown in the Plans.

Additional provisions other than those cited herein may be specified, on a case-by-case basis, to achieve higher performance criteria for Buried Structures. Where such additional requirements are specified, they shall be site or project specific and shall be tailored to a particular Structure type.

8.3.2 WSDOT Templates and Standard Plans

8.3.2.A Buried Structure Templates

The WSDOT Bridge and Structures Office (BSO) has developed precast reinforced concrete standard design drawings for Buried Structures to use as project templates. See Section 8.4 for the complete list of Bridge Standard Drawings available for Buried Structures.

WSDOT's current precast reinforced concrete Buried Structure series is summarized on Bridge Standard Drawing 8.3-A1-1, comprising the following Structure types:

- **Split Box Structures**

  SB20 through SB25, see Bridge Standard Drawing 8.3-A2-1

- **Three-Sided Structures**

  FC20 through FC40, see Bridge Standard Drawing 8.3-A3-1

  VC45 through VC50, see Bridge Standard Drawing 8.3-A3-2

  VC55 through VC60, see Bridge Standard Drawing 8.3-A3-3

The BSO standard design drawings are templates only and should be modified for each project per site specific conditions, design requirements, precaster capabilities, and applicable jurisdiction.

8.3.2.B Buried Structure Standard Plans

The WSDOT BSO has developed Buried Structure *Standard Plans* for the following:

- **E-20.10** Buried Structure – Split Box
- **E-20.20** Buried Structure – Three-Sided
- **D-20.10** Precast Reinforced Concrete Retaining Walls (for wingwalls)

Additionally, the following *Standard Plans* may be used in conjunction with the aforementioned Standards as applicable:

- **A-40.50** Bridge Approach Slab
- **C-20.40** Beam Guardrail Type 31 Placement 12'-6", 18'-9", or 25'-0" Span
- **C-20.41** Box Culvert Embedded Anchor Guardrail Steel Post - Type 31
- **C-20.43** Box Culvert Bolt-Thru Anchor Guardrail Steel Post - Type 31
- **C-81.10** 42" Single Slope Barrier on Structure (TL-4).
- **D-3.09** Permanent Geosynthetic Wall (for wingwalls and headwalls)
- **L-5.10** Bridge Railing Type Chain Link Pipe Rail (for worker fall protection)
- **L-5.15** Cable Fence (for worker fall protection)

Refer to Section 8.3.3.K for the basis of design utilized in developing the Buried Structure Standard Plans. Refer to Section 8.1.4.A.2 for the basis of design utilized in developing the Precast Reinforced Concrete Retaining Wall Standard Plan. The user shall verify the applicability of employing these *Standard Plans* for the given project's site conditions and design requirements.

The Buried Structure Standard Plans include options for various components, which should be considered for the given project. The designer may need to specify specific options within the Standard Plan that are needed or required for the project.

8.3.3 General Design Requirements

The design of Buried Structures shall be in accordance with the requirements and guidance cited herein and in the current LRFD-BDS, LRFD-SGS, WSDOT *Geotechnical Design Manual*, and *Standard Specifications*, unless otherwise required in the project-specific criteria.

8.3.3.A Design Delivery Methods

8.3.3.A.1 *Contractor Supplied Design*

The Region Project Engineer may allow Contractor Supplied Designs for Buried Structures with a Structural Clear Span less than or equal to 30 feet in accordance with these design requirements, including a quality check in accordance with Section 1.4.6. For Structural Clear Spans greater than 30 feet, Contractor Supplied Designs may be used when approved by the State Geotechnical Office and the State Bridge Design Office.

Contractor Supplied Design of Buried Structures shall meet all project specific design requirements and site constraints.

The Contractor may reference the Buried Structure Standard Plans for Structural Clear Spans up to and including 30 feet, as applicable, given the project's site conditions and design requirements are met.

When a Contractor Supplied Design is selected, the Region Project Engineer shall ensure the contract allows sufficient time, from Award to any construction windows, accommodating design, review, and fabrication of the Buried Structure. Typical procurement times are estimated to take 4 to 6 months.

8.3.3.A.2 *Agency Supplied Design*

For Buried Structures designed by the Agency, a Preliminary Plan shall be completed in accordance with the criteria listed in Chapter 2.

Additionally, the structural design shall be completed prior to Advertisement and the Plans shall be included as part of the Ad Ready PS&E.

Agency Supplied Designs shall be completed by one of the following:

- WSDOT Engineering Staff
- Consultant Engineering Staff
- Proprietary Supplier identified as a Sole Source by WSDOT
- Buried Structure Standard Plans, as applicable, given the project's site conditions and design requirements are met.

8.3.3.A.3 *Design Build*

When Design Build is selected, the Contractor shall meet all design requirements and site constraints in accordance with the Project Documents.

The Contractor may reference the Buried Structure Standard Plans for Structural Clear Spans up to and including 30 feet, as applicable, given the project's site conditions and design requirements are met.

See Section 15.8.3 for specific design provisions pertaining to a Design Build delivery method.

8.3.3.B Application of Loads

Buried Structures shall be designed for force effects in accordance with LRFD-BDS, Article 12.6.1, except exemption from seismic loading shall not apply, but rather, shall be applicable in accordance with Section 8.3.3.H.

Buried Structures shall be investigated for all applicable Service, Strength, and Extreme Load Combinations, enveloping all controlling force effects resulting from, but not limited to, the following general load combinations:

- Max. vertical load on top, Max. lateral inward load on walls.
- Max. vertical load on top, Min. lateral inward, Max. outward, load on walls.
- Min. vertical load on top, Max. lateral inward load on walls.
- Min. vertical load on top, Min. lateral inward, Max. outward, load on walls.

This is summarized on Bridge Standard Drawings 8.3-A1-3, *Split Box General Load Combinations* and 8.3-A1-4, *Three-Sided Structure General Load Combinations*.

8.3.3.B.1 *Live Load, LL*

The requirement of Section 3.5 for inclusion of Live Load in the Extreme Event I Load Combination is applicable. The load factor γ_{EQ} as specified in LRFD-BDS, Table 3.4.1-1 shall be taken equal to 0.50, regardless of location or congestion.

Where the Fill Depth is less than 2.0 feet at any point above the Buried Structure, and the Structure is supporting a Roadway, it shall be considered directly exposed to vehicular traffic.

When directly exposed to vehicular traffic, the following applies:

- Live Load shall be distributed directly to the top surface of the Structure, ignoring the effects of Live Load distribution through the Fill Depth.
- A method of shear transfer, capable of transferring the imposed shear and deflection between adjacent units, shall be provided (see Section 8.3.5.A.2).
- All reinforcement in the top unit shall be corrosion resistant as defined in Section 5.1.2, except when a 5.0-inch minimum composite, Cast-In-Place (CIP) concrete topping, meeting the requirements for a Type 4 Bridge Protection System in accordance with Section 5.7.4 is provided.
- A concrete or HMA overlay, or a 5.0-inch minimum reinforced concrete topping slab shall be provided.

The application of the Design Lane Load as defined in LRFD-BDS, Article 3.6.1.2.4 may be excluded, providing a Multiple Presence Factor of 1.2 is applied on the Live Load.

The decrease in Live Load effect due to increase in Fill Depth (distribution of wheel load through earth fill), shall be considered in both design and load rating of Buried Structures with Fill Depths 2.0 feet and greater.

The effects of live load may be neglected in accordance with LRFD-BDS, Article 3.6.1.2.6a.

8.3.3.C Deck Protection and Approach Slabs

When an HMA overlay is provided, a waterproofing membrane in accordance with *Standard Specifications*, Section 6-08 shall be installed. If a 6.0-inch minimum Base or Top Course is placed between the Structure's top unit and HMA, the waterproofing membrane may be omitted.

For an HMA overlay, the minimum concrete cover from the top surface of the Structure to the top mat of reinforcement shall be 2½ inches.

For a concrete topping, the minimum concrete cover from the top surface of the concrete topping to the topping's top mat shall be 2½ inches.

Bridge approach slabs shall be provided in accordance with Section 10.6.

8.3.3.D Buried Structure Foundation Design

Foundations for Buried Structures shall be designed and detailed in accordance with this *Bridge Design Manual*, and the *Geotechnical Design Manual*, and shall include the effects of potential scour as described in Section 7.1.7 and Section 8.1.10.

8.3.3.E Buried Structure Wingwall and Headwall Design

The term 'wingwall' as it relates to Buried Structures, is a retaining wall as defined in Section 8.1.4.B, used to retain the Roadway embankment adjacent to the Buried Structure, or to furnish protection against erosion.

The term 'headwall' is a structural element employed as an end treatment at the inlet and/or outlet of Buried Structures, as a means to retain the structural and/or Roadway fill adjacent to the Structure comprising, at a minimum, parapets, slope collars, and cut-off walls.

Wingwalls, and headwalls for Buried Structures shall be designed in accordance with the current versions of this *Bridge Design Manual*, the *Geotechnical Design Manual*, and Chapter 11 of the LRFD-BDS. Alternatively, Standard Plan D-3.09 or Standard Plan D-20.10 may be employed, provided the user verifies the applicability of the Standard Plan(s) for the given project's site conditions and design requirements.

The bottom of wingwall foundations shall be located, a minimum of 2.0 feet below the total scour at the scour check flood elevation, in accordance with the *Geotechnical Design Manual* unless a greater depth is otherwise specified. The Structure shall be designed for the effects of scour as described in Section 8.1.10.

Portions of wingwalls below the water surface of the Hydraulic Design Flood Elevation shall be reinforced concrete or have a reinforced concrete fascia. The Hydraulic Design Flood Elevation will be established in the Hydraulics Report and is based on either the 100-year or the 2080 projected 100-year flood elevation.

Headwalls shall be reinforced concrete or shall have a reinforced concrete fascia, and shall be designed for any lateral load due to the overburden.

Headwalls, wingwalls, barriers, and railings shall be designed for vehicular collision and pedestrian, or worker fall protection forces where applicable in accordance with Section 10.2 and Section 10.5.

8.3.3.F Worker, Pedestrian and Bicycle Fall Protection

For Buried Structures and associated headwalls and wingwalls, worker, pedestrian and bicycle fall protection shall be provided in accordance with the WSDOT *Design Manual*, and shall be designed in accordance with Section 8.1.11.

Timber shall not be used as permanent fall protection material. Rigid fall protection systems shall not be used within the 'roadway clear zone' as described in the WSDOT *Design Manual*.

8.3.3.G W-Beam Guardrail on Buried Structures (TL-3)

When Standard Plan C-20.41 or Standard Plan C-20.43 guardrail is attached to a Buried Structure, the top slab and adjacent joints shall be designed for the following:

- A minimum equivalent static lateral force of 10.0 kips.
- The force shall be distributed in accordance with LRFD-BDS, Figure A13.4.3.1-1.
- The center of the guardrail post shall be located a minimum of 18.0 inches away from any concrete edge, including but not limited to edges of block-outs, shear keys, and keyways.

For details see Standard Plan C-20.41, or Standard Plan C-20.43, and the WSDOT *Design Manual*.

The configuration shown in Standard Plan C-20.41 was crash tested in 2011 by the Texas A&M Transportation Institute (TTI) following the MASH 2009 Test Designation No. 3-11 and reported under the Roadside Safety Research Program Pooled Fund Study No. TPF-5(114), Test Report No. 405160-23-2.

The configuration shown in Standard Plan C-20.43 was crash tested in 2017 & 2018 by the Midwest Roadside Safety Facility (MwRSF) following the MASH 2016 Test Designation No. 3-10 and 3-11 and reported under MwRSF Test Report No. TRP-03-383-20-R1.

8.3.3.H Buried Structure Seismic Design

The provisions below are the minimum seismic design requirements for conventional Buried Structures. Additional provisions may be specified, on a case-by-case basis, to achieve higher seismic performance criteria. Where such additional requirements are specified, they shall be site or project specific, and shall be tailored to a particular Structure type.

All Buried Structures shall be evaluated and designed for the Extreme Event I Limit State including the effects of seismic loading and all geotechnical seismic hazards, with the following exceptions:

i. Class 1 – Rigid and Flexible Buried Structures need not consider internal structural design (racking) of the Buried Structure elements.

ii. Class 2 – Flexible Buried Structures less than or equal to 30 feet, with shapes as defined in Section 8.3.6.C, need not consider internal structural design (racking) of the Buried Structure elements.

All Class 2 – Flexible Buried Structures with custom or project specific shapes outside of those as defined in Section 8.3.6.C shall consider internal structural design (racking) of the Buried Structure elements.

Where the Structure crosses an active fault, these exceptions shall not apply.

Seismic design and analysis for Buried Structures shall be performed in accordance with the:

- BDM
- LRFD-BDS
- *Geotechnical Design Manual*
- Section 10.8 of the AASHTO LRFD *Road Tunnel Design and Construction Guide Specifications*, 1st Edition, 2017
- Section 13 - *Seismic Considerations* of the AASTHO *Technical Manual for Design and Construction of Road Tunnels – Civil Elements*, June 2010, hereinafter referred to as the *'Technical Manual'*

Seismic design and analysis for wingwalls and headwalls shall be required and performed in accordance with the:

- *Geotechnical Design Manual*
- BDM
- LRFD-BDS

8.3.3.H.1 *Seismic Loading Effects*

Buried Structures shall be designed to accommodate the effects resulting from two types of seismic loading, except as excluded above:

Ground Shaking (i.e., transient ground displacement, TGD); and

Ground Failure (i.e., permanent ground displacement, PGD)

For TGD seismic loads, Buried Structures, except split-box ~ slabs considered directly exposed to vehicular traffic, shall be evaluated using pseudo-static or dynamic soil-structure interaction analysis using a ground displacement approach.

The overall effects of seismically induced external earth loading on a Buried Structure causes the Structure to deform with the surrounding soil or 'rack'. It is, therefore, more reasonable to approach the problem by specifying the loading in terms of deformations. The design goal is to ensure the Structure can adequately absorb the imposed racking deformation (i.e., the deformation method), rather than designing to resist a specified dynamic earth pressure (i.e., the force method). For this reasoning, the effects of transient racking or ovaling deformations on Buried Structures in soil or rock, due to the shear distortions of the ground, shall be used to determine the EQ force effects in accordance with the *Technical Manual*, Section 13.5, unless otherwise required in the project-specific criteria.

Alternately, a refined analysis utilizing a finite element approach, accounting for free-field displacement and soil-structure interaction may also be used.

For TGD seismic loads, split-box ~ slab Buried Structures considered directly exposed to vehicular traffic shall be designed using conventional force-based methods. The bottom unit ('U' shaped frame element) shall be designed for Active, or At-Rest Seismic Earth

Pressures as applicable, and the top unit shall be designed as a simple span superstructure in accordance with the LRFD-BDS. Longitudinal and transverse restraint of the top unit shall be provided as applicable.

For PGD seismic loads the geotechnical designer shall evaluate the site and soil conditions to provide recommendations based on impacts of seismic geologic hazards including fault rupture, liquefaction, liquefaction induced settlement, downdrag, lateral spreading, flow failure, and slope instability, along with estimated loads and deformations acting on the Structure, and options to mitigate seismic geological hazards in accordance with the *Geotechnical Design Manual*. The structural designer shall evaluate, design, and detail all elements for any geological hazards as warranted by the geotechnical engineer.

8.3.3.H.2 *Load Combinations for Transient Seismic Motion*

The effects of vertically propagating shear waves perpendicular to a Buried Structure's longitudinal axis produces two independent deformations in the plane of the Structure's cross-section that shall be considered: (1) Horizontal racking or ovaling deformations, and (2) Inertia forces due to vertical seismic motions.

Therefore, these multi-directional effects of the seismic ground motion shall be applied using a percentage combination method. This method accounts for the simultaneous occurrence of earthquake forces in two perpendicular (horizontal and vertical) directions. The percentage combination is accomplished by considering two separate load cases as follows:

Load Case 1: $EQ = \pm EQ_{Horiz.} \pm \gamma(EQ_{Vert.})$

Load Case 2: $EQ = \pm \gamma(EQ_{Horiz.}) \pm EQ_{Vert.}$

Where, γ is assumed to be 0.30 for rectangular Structures, and 0.40 for circular Structures.

The seismic loads due to racking deformations and vertical seismic motions shall then be combined with non-seismic loads using the load combination and load factors for the Extreme Event I Limit State.

8.3.3.H.3 *Attenuation of Peak Ground Motion Parameters*

The ground motion parameters shall be derived at the elevation of the Buried Structure closest to the finished grade surface. The peak ground motion parameters may be adjusted to reflect attenuation of ground motion with depth according to Table 8.3.3.H-3, unless detailed site-specific analysis is performed to evaluate attenuation with depth.

Table 8.3.3.H-3 Ground Motion Attenuation with Depth (Modified after AASHTO, 2010)

Depth to Top of Buried Structure (feet)	Ratio of Ground Motion at Buried Structure Depth to Motion at Ground Surface (Attenuation Factor, R_{GMA})
≤ 20	0.95 – 1.00*
20 to 50	0.75 – 0.95*
50 to 100	0.50 – 0.75*
≥ 100	0.50

*For depths between the limits of each range, corresponding ground motion attenuation factors shall be estimated by linear interpolation – the larger factor corresponding to shallower depth.

The vertical seismic inertia force, $EQ_{Vert.}$, shall be taken as ⅔ of the Effective Peak Horizontal Ground Acceleration, A_s, times the appropriate Attenuation Factor, R_{GMA}, times the sum of the dead load of the top unit and the vertical earth load on top of the top unit.

8.3.3.I Load Rating

All Class 2 Buried Structures shall be load rated in accordance with Chapter 13.

8.3.3.J Usage of Buried Structure Design Software and/or Spreadsheets

The use of structural analysis software and/or spreadsheets shall be completely transparent and include all relevant information necessary to verify compliance with applicable design criteria. Accompanying supporting calculations may be necessary for verification. Any hidden code, function, design input, or result shall be explained thoroughly and be easily verifiable. Spreadsheets shall be unlocked. All calculations shall be logical to follow, and shall include references to all applicable requirements in the design standards.

The *Eriksson Culvert* software developed by Eriksson Software, Inc. may be used for the design and load rating of box, split box, and split box ~ slab Structures, along with the top unit (inverted 'U' shaped frame element) of three-sided Structures, provided '*WSDOT*' is selected from the dropdown menu as the *Agency Recommendations* in the *Project Settings*' window. The Engineer shall verify all the *Agency Recommendations*, listed in the dialog box for '*WSDOT*', are appropriate for the specific project and all design and load rating requirements of this manual are satisfied.

WSDOT has internally reviewed the software and found it to be in compliance with the requirements of this manual, with the following exceptions that should be considered and addressed by the designer:

1. The software does not analyze transverse Differential Settlement (SE), which will need to be analyzed independently and accounted for in the final design. Settlement need only be considered for the Service Limit State.

2. The software, when considering external hydrostatic pressure, doesn't reduce the Horizontal Soil Pressure, *EH*, to a buoyant weight. The engineer can conservatively include both the hydrostatic and dry soil pressures together or use alternative methods to account for buoyant soil weight.

   The software also provides users with input options to envelope the Horizontal Earth Load using a minimum and a maximum Equivalent Fluid Pressure. The designer shall not use Equivalent Fluid Pressure to envelope the Horizontal Earth Load, but rather shall use a site-specific Earth Pressure Coefficient, K_a or K_o as applicable, provided by the geotechnical engineer as the Horizontal Earth Load input. The minimum and maximum loading is addressed by assigning the appropriate load factors for the various Limit States.

3. WSDOT Buried Structure Standard Plans are detailed to combine vertical exterior face wall reinforcement around the corners and terminate in the top or bottom slab. The *Eriksson Culvert* software details slab and wall bars independently and adds a separate corner bar. The amount of reinforcement and termination of corner bars shall be verified to meet the design.

4. The software is not capable of designing three-sided Structures on a foundation unit (comprising a footing, or a footing with an integral stem wall). The designer may uncouple the analysis by using the software to design the top unit (inverted 'U' shaped frame element), and then transferring the support reaction outputs onto the top of the foundation unit in a separate analysis.

8.3.3.K Buried Structure Standard Plans

The WSDOT Buried Structure Standard Plans identified in Section 8.3.2.B were developed from the *WSDOT – Standard Plans for Split Box/Three-Sided Buried Structures and Wingwalls - Basis of Analysis*, dated September 2023.

Design criteria (parameters, properties, and assumptions), specific to Structure type, are summarized in Section 8.3.3.K.1 and Section 8.3.3.K.2 below.

Common design criteria, regardless of Structure type, are defined as follows:

HYDRAULIC:

a. No part of the Structure (foundations, headwalls, wingwalls, fillets, chamfers, etc.) are placed within the Minimum Hydraulic Opening.

GEOTECHNICAL:

b. Geotechnical design criteria are based on the recommendations given in the *WSDOT Geotechnical Office Memorandum for Buried Structure Standard Plan Development*, dated July 2023.

c. Foundation (or native subgrade) soil, embankment soil, and soil above the foundation level, adjacent to the Structure, are non-liquefiable.

d. Foundation (or native subgrade) soil comprises a Total Unit Weight, γ_{tot}, ranging from 120 to 135 pcf.

e. Bearing Resistance Factors, φ_b, are 1.0 for Service, 0.45 for Strength, and 0.90 for Extreme Limit States.

f. Structural Backfill and/or any existing soil within the Zone of Influence comprises granular soil having a minimum Drained Internal Angle of Friction, ϕ, of 34°, and a Total Unit Weight, γ_{tot}, ranging from 125 to 145 pcf.

g. The Structure was considered 'stiff' (displacing no more than 0.001 times the Structure height), therefore an At-Rest, lateral earth pressure condition was assumed. At-Rest Lateral Earth Pressure Coefficient, K_o, was established as 0.44.

h. Slopes behind headwalls are level or inclined to a maximum 2-Horizontal to 1-Vertical slope, having At-Rest Lateral Earth Pressure Coefficients, K_o, established as 0.44 and 0.64 respectively.

i. Seismic design is based on two Peak Seismic Ground Acceleration Coefficients (modified by short-period site factor), A_s, values of 0.32g and 0.64g.

j. Headwalls are structurally restrained against movement, therefore a Seismic Horizontal Acceleration Coefficient, K_{h0}, equal to the full design A_s is warranted.

k. Seismic At-Rest Lateral Earth Pressure Coefficients, K_{oe}, for headwalls with level backslope are established as 0.68 and 1.05 for A_s values of 0.32g and 064g respectively.

l. Racking analyses were based on an Effective Shear Modulus, G_m, of 2,400 ksf and 1,500 ksf for A_s values of 0.32g and 0.64g respectively, with Poisson's Ratio, ν, established as 0.35. The effective stiffness of structural elements was established as half of the gross values. The controlling Structure-Slip Interface between Full Slip and No Slip was used in the analyses.

m. The Geotechnical Engineer is required to evaluate global slope stability, settlement, and whether the Standard Plan(s) are geotechnically applicable to the site-specific conditions and constraints.

MATERIAL:

n. Concrete Compressive Strength (initial loading for handling), f'_{ci}, was established as 3,500 psi.

o. Concrete Compressive Strength, f'_c, was established as 7,000 psi for precast Structures, and 4,000 psi for headwalls and C.I.P. elements, unless otherwise shown.

p. Reinforcing steel is assumed to have a minimum yield strength, f_y, of 60 ksi.

LOADING:

q. **Live Load and Impact, *LL + IM***, analyses were performed assuming traffic travels parallel to the span, under an HL-93 loading (excluding a Design Lane Load), using a single-loaded lane, a single-lane Multiple Presence Factor of 1.2, and a Vehicular Dynamic Load Allowance, *IM*, in accordance with LRFD-BDS, Article 3.6.2.2.

For Structures less than 2.0 feet from the Roadway surface, Live Load, *LL*, was applied directly to the top surface of the Structure, ignoring the effects of Live Load distribution through the Fill Depth.

The Structures were load rated in accordance with Chapter 13.

r. **Vertical Soil Pressure, *EV***, loading was modified by a soil-structure interaction factor for embankment installation, F_e, of 1.15, assuming compacted fill.

s. **Dead Load, *DL***, computations assume a Unit Weight for Reinforced Concrete, w_{rc} of 0.155 kcf, which includes a 5.0 lbs./ft.^{3} allowance for reinforcement.

t. **Differential Settlement, *SE***, was only considered along the Structure's transverse axis (parallel to the span). This was applied as a pure shear load, to accommodate a structural differential displacement of 1.0-inch per 100-foot of span, reduced from 2.0-inch per 100-foot of span to account for the rotational effects not captured by a pure shear loading condition. The effective moment of inertia, I_{eff}, used in the settlement analyses was established as half of the gross moment of inertia, I_{gross}, to account for a superimposed deformation type of loading and long-term creep effects within the concrete. Differential Settlement along the Structure's longitudinal axis was not specifically analyzed as, perpendicular to the span, the Structure is segmental and therefore considered flexible.

u. **Water Load, *WA***, from hydrostatic pressures was resolved into two components. An internal (stream) pressure loading, $WA_{int.}$, and an external (groundwater) pressure loading, $WA_{ext.}$. The head pressure design height was established as 3'-0" + $H/3$ for Service and Extreme Limit States, and H for Strength Limit State, where 'H' is the Structure's 'Design Height'.

v. **Horizontal Soil Pressure, *EH***, using *Eriksson Culvert*, does not account for a buoyant soil weight when considering external hydrostatic pressure, and this was reconciled externally.

w. **Live Load Surcharge, *LS***, was applied in accordance with LRFD-BDS, Article 3.11.6.4 for Vehicular Loading Perpendicular to Traffic. The equivalent height of soil for vehicular load, h_{eq}, used for variable Fill Depths and Structure heights is as follows:

Table 8.3.3.K-1 Equivalent Height of Soil, h_{eq} for LS (ft.)

Fill Depth (ft.)	Height of Structure (ft.)		
	10	15	20
0	3.0	2.5	2.0
5	2.5	2.0	
≥ 10	2.0		

For load rating analyses, the equivalent height of soil for vehicular load, h_{eq}, was adjusted proportionally using the ratio of specific vehicle weight (varies) and HL-93 truck weight (72 kips).

x. **Earth Surcharge, *ES***, loading was not considered.

y. **Earthquake, *EQ***, loading was only considered along the Structure's transverse axis (parallel to the span) in accordance with Section 8.3.3.H. Expected material strengths were not used in capacity computations for the Extreme Event loading.

A longitudinal seismic analysis (perpendicular to the span) was not specifically performed as the Structure is segmental and therefore considered flexible.

STRUCTURAL:

z. No part of the Structure (foundations, headwalls, wingwalls, fillets, chamfers, etc.) are placed within the Structure Free Zone.

aa. The critical shear section was taken at a distance, d_v, past the end of the fillet or haunch.

bb. Flexural reinforcement in walls and slabs are based on the moments taken at the intersection of the fillet (or haunch) and uniform depth member, and at midspan.

cc. The Reinforcement Ratio, ρ, was limited to 2.0%, bar sizes to a range between No. 4's and No. 10's, and the spacing from a 4.0-in. min. to 6.0-in. max.

dd. Unit Weight for Concrete, w_c, used in stiffness computations was established as 0.150 kcf.

ee. Resistance Factors were established in accordance with LRFD-BDS. Except for combined flexure and axial effects used for the design of the Structure's walls. See the specific Structure type below for respective Resistance Factors for tension-controlled members. Resistance Factors for compression-controlled members was established as 0.75.

ff. An Effective Length Factor, K, of 1.0 was used for the lateral stability (slenderness) check of the Structure's walls.

gg. Tie plates are required to anchor the last three segments together, or for a minimum of 12.0 feet inboard from each end of the Structure, whichever is greater. Tie plates were designed to resist lateral forces and seismic earth pressure loading on the

Structure's headwall and frictional forces along the Structure's sidewall, which impose an overturning moment on the segment. Each tie plate has a 20-kip capacity for an Extreme Event loading, applying a Resistance Factor of 1.0. Nominal tie plates are required as a constructability aid, facilitating the erection of remaining segments, and to counter any nominal lateral forces.

Additional tie plates are required for Structures located within seismic zones with Peak Seismic Ground Acceleration Coefficients (modified by short-period site factor), A_s, greater than 0.55g, and having headwalls retaining back slopes steeper than 2.5-Horizontal to 1-Vertical.

hh. Approach slab seats were designed to accommodate a uniformly distributed load from an approach slab, designed in accordance with Section 10.6.2, assumed to have an Effective Span Length, S_{eff}, established as 17.0 feet. The uniform loading was established as 8.36 klf, which includes Dead Loads of 1.56 klf for DC, and 0.35 klf for DW, with a Live Load and Impact load established as 6.45 klf. The controlling HL-93 loading was determined as the Tandem (excluding a Design Lane Load) using a single-loaded lane, a single-lane Multiple Presence Factor of 1.2, and a Vehicular Dynamic Load Allowance in accordance with LRFD-BDS, Article 3.6.2.2.

ii. Headwalls are designed to accommodate a fall protection system. Fall protection loading was not applied to an Extreme Event Limit State.

jj. Structural analyses were performed using '*Eriksson Culvert*' engineering software, supplemented with CSiBridge, Mathcad, and spreadsheets, as applicable.

8.3.3.K.1 *Split Boxes Structures*

The general design criteria used for Standard Plan E-20.10 are summarized in Section 8.3.3.K above, specific design criteria for split box Structures are summarized below and, within the Tables and General Notes provided in the Standard Plan.

GEOTECHNICAL:

a. Foundation (or native subgrade) soil shall have a minimum Factored Bearing Resistance as specified in the Standard Plan.

b. Foundations are placed having the top of the bottom slab located a minimum of 2.0 feet below the total scour at the scour design flood.

STRUCTURAL:

c. The following configurations were selected to envelope the established design requirements considering reasonableness in number of iterations, feasibility of the designs, and economics:

- Split Box ~ Slabs with a 10'-0" Design Height
- Split Boxes with 15'-0" and 20'-0" Design Heights

Producing a set of tables from which users select an applicable Structure given the project's site conditions and design requirements.

To accommodate intermittent Design Heights, a 10'-0" unit may be reduced by a maximum of 3'-0", producing a completed unit with a 7'-0" height comprising reinforcement for the 10'-0" unit. This enables the designer to specify a structure with a Design Height ranging from 20' to 17' or with a Design Height ranging from 15' to 12'.

d. Loads, load factors, load combinations, and limit states enveloping all controlling force effects analyzed are summarized on Bridge Standard Drawings 8.3-A1-3 *Split Box General Load Combinations*.

e. Resistance Factors for tension-controlled members used for the design of the Structure's walls was established as 1.0.

f. Shear at the horizontal joint between the top and bottom units was resisted using a combination of the shear capacity of the 'shiplap' geometry, the friction between units, and supplemented using steel brackets as necessary. A factored coefficient of friction for concrete on concrete was assumed to be 0.40.

g. For a Structural model description see Section 8.3.5.E. The boundary condition was established as a uniformly distributed loading along the bottom unit.

8.3.3.K.2 *Three-Sided Structures*

The general design criteria used for Standard Plan E-20.20 are summarized in Section 8.3.3.K above, specific design criteria for three-sided Structures are summarized below and, within the Tables and General Notes provided in the Standard Plan.

GEOTECHNICAL:

a. Foundation (or native subgrade) soil comprises a minimum Drained Internal Angle of Friction, φ, of 30°, 34° and 38°, and a Total Unit Weight of 120 pcf, 125 pcf, and 135 pcf respectively.

b. Foundations are placed with the bottom of the footing 2.0 feet below the total scour at the scour check flood and rely on a minimum of 2.0 feet of passive resistance.

c. Passive Lateral Earth Pressure Resistance Factors, φ_p, are 1.0 for Service, 0.5 for Strength, and 1.0 for Extreme Limit States.

d. Coefficient of Sliding, μ_s, is based on Crushed Surfacing Base Course (CSBC) and assumed to have a Drained Internal Angle of Friction, φ, of 36°, and is established as 0.58 for precast, and 0.73 for C.I.P. footings respectively.

e. Sliding Resistance Factors, φ_s, are 1.0 for Service, 0.8 and 0.9 for C.I.P. and precast foundations respectively for Strength, and 1.0 for Extreme Limit States.

STRUCTURAL:

f. The following configurations were selected to envelope the established design requirements considering reasonableness in number of iterations, feasibility of the designs, and economics:

- Three-sided Structures with a 10'-0" Design Height (no stem wall)
- Three-sided Structures with a 12'-0", 14'-0", and 16'-0" Design Height, having stem walls with heights of 2'-0", 4'-0", and 6'-0" respectively.

Producing a set of tables from which users select an applicable Structure given the project's site conditions and design requirements.

g. Loads, load factors, load combinations, and limit states enveloping all controlling force effects analyzed are summarized on Bridge Standard Drawings 8.3-A1-4, *Three-Sided Structure General Load Combinations*.

h. Resistance Factors for tension-controlled members used for the design of the Structure's walls was established as 0.95.

i. The Structural model can be described as follows:

The top unit was designed using 'Eriksson Culvert' engineering software, supplemented externally for settlement. Live Load reactions from Eriksson outputs were then applied to the foundation unit and subsequently design externally. The boundary condition was established as a trapezoidal distributed loading along the foundation units for stability and fixed for structural design.

8.3.4 Materials

8.3.4.A Concrete

All cast-in-place and precast concrete shall be in accordance with Section 5.1.1.

Class 5000 through 7000 are commonly used for precast Structures. Self-Consolidating Concrete (SCC) may also be used.

Concrete cover measured from the face of concrete to the face of any reinforcing steel shall be a minimum of 2.0 inch at all faces, except as required in Section 8.3.3.C.

8.3.4.B Reinforcing Steel

Reinforcing steel shall be in accordance with Section 5.1.2.

The nominal yield strength for reinforcement bar shall be limited to a maximum of 80 ksi.

Corrosion resistant reinforcement shall be provided in the top unit in accordance with Section 8.3.3.B.1.

Welded Wire Reinforcement (WWR) may be used to replace plain deformed steel reinforcing bars in Buried Structures provided the WWR has an equivalent bar area, equal or reduced bar spacing, and satisfies crack control and minimum reinforcement requirements of the LRFD-BDS. Welded Wire Reinforcement shall be deformed and shall conform to the requirements of ASTM A1064. The specified minimum yield strength of WWR shall be limited to a maximum of 75 ksi per Section 5.1.2.I.

Prestressing steel shall be in accordance with Section 5.1.3.

8.3.4.C Bedding and Leveling Material

Buried Structure foundation subgrade, bedding and leveling material shall be prepared in accordance with the *Standard Specifications*.

The leveling course shall be a maximum of 2.0 inches and the bedding course shall be a minimum of 6.0 inches. The material requirements for bedding and leveling materials are defined as follows:

8.3.4.C.1 *Precast Reinforced Concrete Buried Structure – Three-Sided*

Bedding course only, consisting of Crushed Surfacing Base Course.

8.3.4.C.2 *Precast Reinforced Concrete Buried Structure – Split Box*

Bedding course, comprising Crushed Surfacing Base Course, or to AASHTO Grading No. 57 as specified in *Standard Specifications*, Section 9-03.1(4)C, followed by a leveling course in accordance with *Standard Specifications*, Section 9-03.1(2)B Grading Class 1 or Class 2 Sand.

8.3.4.C.3 *Precast Reinforced Concrete Retaining Walls (Wingwalls)*

Bedding course only, consisting of Crushed Surfacing Base Course.

8.3.4.D Joint Sealant and External Sealing Bands

All non-grouted joints between concrete units shall be sealed by Butyl Rubber Sealant in accordance with *Standard Specifications*, Section 9-04.11.

All joints between concrete units shall be wrapped with an External Sealing Band in accordance with *Standard Specifications*, Section 9-04.12, except that bottom unit longitudinal joints are not required to be wrapped. Additionally, the External Sealing Band may be omitted for top unit longitudinal joints when a waterproofing membrane, a concrete overlay, or 5-inch minimum concrete topping slab is installed. External Sealing Bands shall be installed before any tie plates or external shear restraining system(s).

See Bridge Standard Drawing 8.3-A2-7 and 8.3-A3-5 for typical joint sealing details for split box and three-sided Structures respectively.

8.3.4.E Corrosion

Consideration shall be given to the degradation of Buried Structure materials resulting from corrosive conditions as defined in Section 6.7. The following corrosion mitigation efforts are commonly used to ensure Service Life criteria is met:

8.3.4.E.1 *Metal Structural Plate Structures*

Minimum corrosion rates and design Service Life analysis shall be in accordance with Section 6.7.2.

When using galvanized or zinc coated metal structural plate Structures below the Hydraulic Design Flood Elevation, a reinforced concrete splash wall is required. See Section 8.3.6.C for additional details and requirements. The Hydraulic Design Flood Elevation will be established in the Hydraulics Report and is based on either the 100-year or 2080 projected 100-year flood elevation.

8.3.4.E.2 *Concrete Structures*

Corrosion resistant reinforcement as defined in Section 5.1.2 shall be used in Marine or Non-Marine: Corrosive environments, and additional concrete cover may also be provided. The minimum cover requirements for direct exposure to salt water and coastal situations of the LRFD-BDS shall apply.

Alternative corrosion protection measures to achieve a minimum Service Life of 75-years shall be approved by the State Bridge Design Engineer.

8.3.5 Limit States and Design Methodologies

8.3.5.A Service Limit State

Service Limit State is used to satisfy stress limits, deflection, and control of cracking requirements as applicable.

8.3.5.A.1 *Total and Differential Settlement*

The geotechnical engineer shall perform settlement calculations, evaluating total expected settlement, along with the potential for transverse and longitudinal differential settlement between Buried Structure units, including wingwalls, and provide settlement

data and recommendations to the structural designer. The structural engineer shall evaluate, design, and detail all elements for any settlement(s) warranted by the geotechnical engineer.

8.3.5.A.2 *Deflection and Shear Transfer*

Concrete Structures directly exposed to vehicular traffic (Fill Depth < 2.0 feet), having top slabs thinner than specified in LRFD-BDS, Table 2.5.2.6.3-1 may experience excessive differential deflection of adjacent units imposed by vehicular live loads. Excessive differential deflection of the top slab can cause premature deterioration of the wearing surface such as debonding, fracturing or pavement cracking.

To mitigate differential deflection between adjacent units, the minimum top slab depths stipulated in LRFD-BDS, Table 2.5.2.6.3-1 are required for all concrete Buried Structures, regardless of Fill Depth.

Where the top surface of the Structure is less than 2.0 feet from the Roadway surface, a method of shear transfer shall be provided between the top slabs of adjacent precast units to equalize deflections by incorporating one of the following:

1. A structural connection between adjacent precast units capable of transferring the imposed shear and equalizing deflections. The structural connections shall include reinforced cast-in-place concrete, or Ultra High-Performance Concrete (UHPC) closures, or grouted shear keys.
2. A 5-inch minimum thickness composite cast-in-place reinforced concrete topping slab, meeting the requirements of a Type 4 Protection System.
3. A full Roadway section (12.0-inch minimum depth), comprising a combination of CSBC and/or CSTC, and HMA.

In addition to meeting the requirements of LRFD-BDS, Table 2.5.2.6.3-1, the top slab thickness for boxes, split boxes and three-sided Structures shall meet a span-to-thickness ratio of 18 or less.

Arch-top Structures, because of their geometry and interaction with the surrounding soil, do not exhibit significant differential deflections that could cause pavement cracking for Structures with less than 2.0 feet of Fill Depth. Thus, the requirements for thickness, differential deflection, and shear transfer between adjacent units does not apply.

8.3.5.A.3 *Control of Cracking*

Reinforcement shall be provided and spaced to meet the requirements of LRFD-BDS, Article 5.6.7. The exposure factor shall be based upon a Class 2 exposure condition.

Temperature and Shrinkage reinforcement shall be provided and spaced to meet the requirements of LRFD-BDS, Article 5.10.6.

8.3.5.B Strength Limit State

Strength Limit State is used to satisfy flexural, shear, thrust, and radial tension requirements as applicable.

8.3.5.C Extreme Limit State

Extreme Limit State is used to satisfy seismic, check flood, and scour requirements as applicable. Expected material strengths shall not be used for computing capacities for Extreme Event loading.

8.3.5.D Boundary Conditions

Rigid frames are statically indeterminate Structures, and as such, require more rigorous analysis than statically determinate Structures. This has led to some simplifying assumptions to facilitate rapid computations, which do not capture the inherent advantages of rigid frames, such as continuity, stiffness, and economy, creating inefficiencies in the design.

Rigid frame members designed assuming simply supported boundary conditions, produce conservative reinforcement requirements in positive moment regions, and leave negative moment regions with deficiencies in reinforcement requirements. This is not an efficient design approach, because the assumed boundary conditions do not capture the essence of the Structure's behavior. Therefore, to accurately capture a rigid frame's behavior and eliminate possible reinforcement deficiencies, concrete three-sided and box Structures shall be analyzed as a rigid frame, applying appropriate boundary conditions.

Additionally, the bottom slabs of box Structures are entirely supported by the underlying bedding material. Often for ease of computations, the bottom slab of these Structures is analyzed as a simply supported beam. Again, this does not capture the Structure's behavior efficiently and tends to leave reinforcement deficiencies in negative moment regions. Analyzing the slab supported on a uniform or trapezoidal support reaction or on an elastic foundation are more appropriate approaches. An elastic foundation type of analysis can be achieved using the modulus of subgrade reaction, as determined by the geotechnical engineer, to determine a spring constant, and applying a series of compression springs along the bottom slab of the Structure.

Through the development of the Buried Structure Split Box Standard Plan, applying a uniform or trapezoidal support reaction, when compared with an elastic foundation analysis, was found to sufficiently capture the soil-structure interaction behavior for the design of the bottom slab of box structures.

8.3.5.E Structural Modeling

8.3.5.E.1 *Three-Sided Structures*

Should be modeled as a rigid frame, chorded arch, or arch with pin or fixed support reactions as applicable. The top unit (inverted 'U' or chorded 'U' shaped frame element) of a three-sided Structure may be modeled in a software such as *Eriksson Culvert* or *CSiBridge* and then the support reaction outputs at the bottom of the wall(s) can be applied to the top of foundation units (comprising a footing, or a footing with an integral stem wall) when utilized. This essentially uncouples the analysis so the two elements can be analyzed and designed separately. In addition to the reactions from the top unit, foundation units should be designed for external stability and the appropriate earth and hydraulic lateral forces.

8.3.5.E.2 *Split Box Structures*

When utilizing an elastic foundation method for analyzing split boxes, the model should be developed as shown in Figure 8.3.5.E-2. There are two primary boundary condition functions that need to be addressed within the model. The first function should be to maintain global stability, therefore the bottom left node is restrained in the global x-direction. The second function should be to provide displacement-dependent resistance to vertical loads by supporting the Structure with compression springs.

When utilizing a uniform or trapezoidal support condition, the springs should be replaced with upward vertical distributed loads equal and opposite to the downward vertical loads.

The hinges shown in the model corresponds to the joints between the top and bottom units. When using a shiplap joint, the joint is only capable of transferring shear in one direction and no moment, therefore, the shear output from both joints should be added together and applied to a single joint for design. As an alternative way to resist shear in both directions, steel brackets (like the WT restrainers detailed on Standard Plan E-20.10) may be bolted across the joint to provide shear restraint in the unrestrained direction. Additionally, due to Dead Loads from the top unit and the fill above the Structure, friction forces are developed between the top and bottom units at the joints. A maximum Friction Factor, μ, of 0.4 (concrete to concrete) shall be used when accounting for friction forces to aid in shear resistance at the joints.

Figure 8.3.5.E-2 Split Box on an Elastic Foundation Model

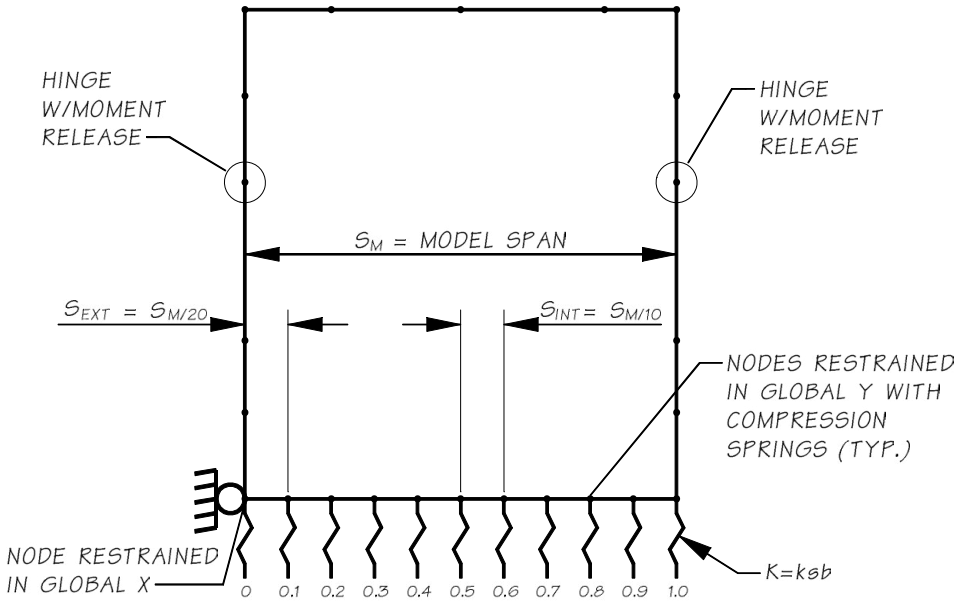

Nodes should be placed at points of interest such as corners, fillet/uniform cross-section interface locations, and midspan of members. Additional nodes should be placed along the bottom element of the model and restrained using compression springs in the global y-direction.

The spring constant (stiffness of ground spring) in the beam-spring model is used in the development of the compression springs and shall be computed by multiplying the moduli of subgrade reaction with the tributary area at the corresponding node as follows:

$$K = k\,s\,b$$

Where:

K = Compression Spring Constant

k = Modulus of Subgrade Reaction

s = Tributary Length Associated with a Node

b = Unit Slab Width

8.3.5.E.3 *Split Box ~ Slab Structures*

Can be modeled as described in Section 8.3.5.E.2, and as shown in Figure 8.3.5.E-2, except that the hinges with moment release shown should be replaced with transverse springs to represent elastomeric bearing pads, or pins as applicable, and the top unit should be replaced with a flat slab unit.

Alternatively, the top slab unit (superstructure) may be analyzed using *PGSuper* with the bearing reactions applied to the bottom unit as an external axial load on a per foot basis. Additionally, in lieu of a racking analysis, earthquake loads, and bearing shear forces shall be applied to the bottom unit as described in Section 7.5.4.D, and 7.5.4.E respectively.

8.3.6 Provisions for Structure Type

8.3.6.A Concrete Box and Split Box Structures

Concrete boxes are four-sided, rigid frame Structures. Split boxes consist of either a rigid three-sided frame lid, or flat top slab called the top unit, and a rigid three-sided frame base or bottom unit.

Concrete box Structures shall be constructed in accordance with *Standard Specifications*, Section 6-20.

8.3.6.A.1 *Precast Geometric Limitations*

Formwork used in the precast industry for rigid three-sided frame Structures with span lengths ranging from 8.0 feet up to 35.0 feet, contain geometric limitations that should be considered when establishing a Structure's geometry. The following are not proven design ranges, they are recommendations from the precast industry based on their form capabilities and reference Figure 8.3.6.A-1:

S = Design Span Length, shall be varied in 1'-0" increments from a minimum of 8'-0" to a maximum of 35'-0".

TW_F = Thickness of the Wall at the Fillet, is typically either 10.0" or 12.0", and tapers to TW_J = Thickness of the Wall at the Joint, the typical taper is 2H:103V.

H_T = Height of the Top Unit's Wall, and H_B = Height of the Bottom Unit's Wall, shall be varied in 1'-0" increments from a minimum of 0'-0" to a maximum of 10'-0" (includes the fillet height). If project limitations require a dimension between 1'-0" increments, the designer is encouraged to contact precast manufacturers for available options.

T_T = Thickness of Top Slab, and T_B = Thickness of Bottom Slab, shall be varied in 2.0" increments from a minimum of 10.0" to a maximum of 24.0".

F = Fillet dimensions are fixed and shall be 17.0" x 17.0".

Skewed units shall be limited to skew angles of 45 degrees or less and be varied in 1.0-degree increments.

L_W = Lay Width, typically varies in 1'-0" increments from a minimum of 4'-0" to a maximum of 10'-0".

If the lay width of the individual precast segments is not critical on a project, the designer is encouraged to provide a minimum lay width of the segments, along with an overall lay width of Structure to allow fabricators to choose lay widths of individual segments based on their form capabilities and shipping requirements (typical shipping weight limits are 60-65 kips).

Figure 8.3.6.A-1 Typical Split Box, Comprising Two - Precast Three-Sided Frame Elements

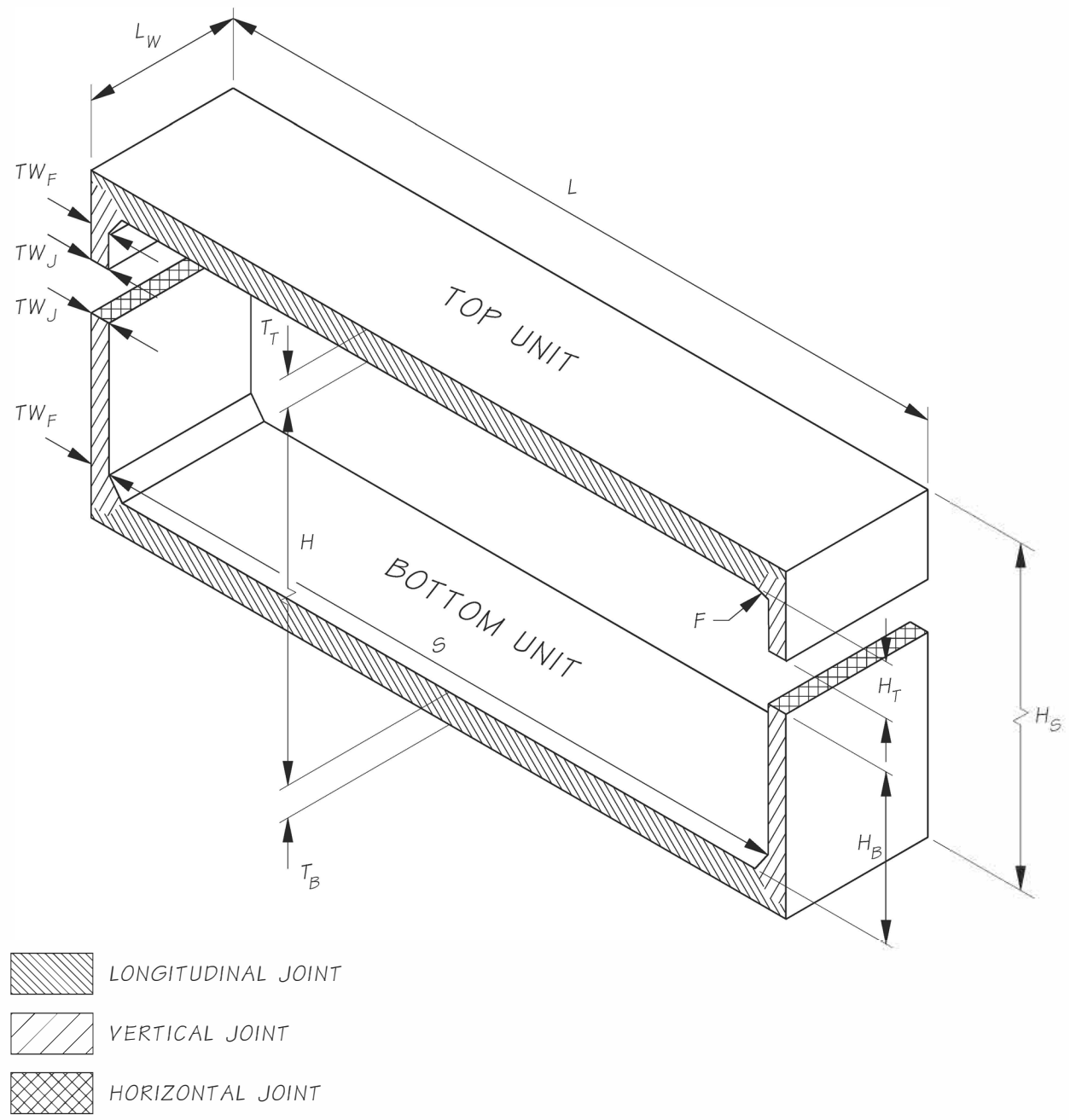

L	=	Length of Structure	H_B	=	Height of Bot. Unit Walls
H_s	=	Height of Structure	T_T	=	Thickness of Top Slab
L_W	=	Lay Width or 'Lay Length'	T_B	=	Thickness of Bot. Slab
S	=	Design Span Length	TW_F	=	Wall Thickness at Fillet
H	=	Design Height of Segment	TW_J	=	Wall Thickness at Joint
H_T	=	Height of Top Unit Walls	F	=	Fillet (Height & Width)

8.3.6.A.2 *Distribution of Live Load through Earth Fill*

The distribution of wheel loads through earth fill shall be in accordance with LRFD-BDS, Article 3.6.1.2.6, except as follows:

Where the Fill Depth is:

1. Less than 2.0 feet, the distribution of axle load to the top slab specified in LRFD-BDS, Article 4.6.2.10.2 shall not apply. Axle load shall be distributed directly to the top slab for determining moment, thrust, and shear, ignoring the effects of Live Load distribution through the Fill Depth.
2. 2.0 feet or greater, Live Load shall be distributed to the top slab in accordance with LRFD-BDS, Article 3.6.1.2.6 as wheel loads and shall consider interaction effects.

8.3.6.A.3 *Joint Design and Details*

Joints shall be designed to carry the applied horizontal and vertical forces, and so formed that they can be assembled to transmit those forces and provide joint tightness consistent with tolerances outlined in the Contract Documents.

- **Vertical Joints** (See Figure 8.3.6.A-1):

  Joints between adjacent units.
- **Horizontal Joints** (See Figure 8.3.6.A-1):

  Joints between the top units and bottom units.
- **Longitudinal Joints** (See Figure 8.3.6.A-1):

  Top and bottom joints between adjacent units parallel to the Design Span.

  Top slab longitudinal joints shall address shear transfer as specified in Section 8.3.5.A.2.

WSDOT acceptable joint types can be found on Standard Plan E-20.10. Alternate joint types may be proposed addressing applied forces, differential settlement between segments, live load deflection, shear transfer, and prevention of water and soil migration through the joint. See Bridge Standard Drawing 8.3-A2-7 for joint sealing details.

Joints employing a bell & spigot (a.k.a. a tongue & groove, or shiplap), as shown in Figure 8.3.6.A-3, shall be detailed such that the laying of units on the prepared bedding and leveling material should start at the outlet, and with the bell (or groove) end pointing upstream or ahead on stationing, and the spigot (or tongue) end pointing downstream or back on stationing, with installation proceeding toward the inlet end to facilitate placement during construction and prevent undermining of downstream units at the joints for hydraulic Structures in service.

Figure 8.3.6.A-3 Precast Box Joint Details to Facilitate Installation

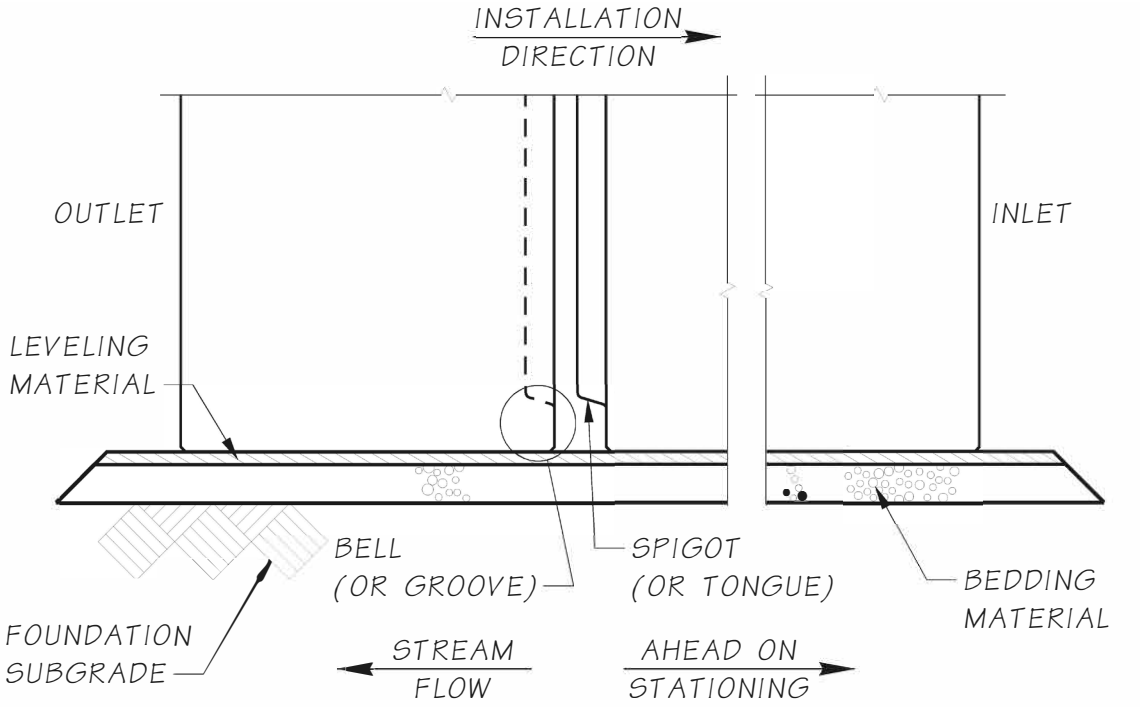

The orientation of the bell and spigot should alternate between the bottom units and the top units. This alternating orientation is preferred, as it provides the most flexibility to facilitate staged construction requirements and has an inherent placement advantage during construction.

If staging is not necessary, projects may incorporate an optional alternate detail to allow alignment of the vertical bell and spigot joint between the top and bottom units. The installation sequence in this aligned configuration should be such that the bottom units are installed in the direction of stationing, whereas the top units should be installed in the reverse direction to alleviate constructability issues from trying to slide a bell end under a spigot.

8.3.6.B Concrete Three-Sided Structures

Three-sided Structures are rigid frame, chorded arch, and arch Structures which may have open inverts and are supported by concrete foundation units (comprising a footing, or a footing with an integral stem wall).

Three-Sided Structures shall be constructed in accordance with *Standard Specifications*, Section 6-20.

8.3.6.B.1 *Precast Geometric Limitations*

Rigid Three-sided Structures with span lengths ranging from 8.0 feet up to 35.0 feet, contain the same geometric limitations that should be considered when establishing a Structure's geometry as outlined in Section 8.3.6.A-1.

Three-sided Structures with geometries matching WSDOT's current Buried Structure series FC30 – FC40, and VC45 – VC60 should maintain the geometrics identified on Bridge Standard Drawing 8.3-A1-1. If project limitations require alternate dimensions, the designer is encouraged to contact precast manufacturers for available options.

8.3.6.B.2 *Distribution of Live Load through Earth Fill*

The distribution of wheel loads shall be as specified in Section 8.3.6.A.2.

For Structures with skews greater than 15°, the effects of the skew shall be considered in the analysis in accordance with LRFD-BDS, Article 12.14.5.3.

8.3.6.B.3 *Joint Design and Details*

Refer to Section 8.3.6.A.3 for joint requirements, except as noted:

- **Horizontal Joints** (See Figure 8.3.6.A-1):

  Joints between the top units and foundation units.

  Foundation units consist of either a footing, or a footing with an integral stem wall. See Bridge Standard Drawing 8.3-A3-4 for connection detail options.
  See Bridge Standard Drawing 8.3-A3-5 for joint sealing details.

8.3.6.C Design of Metal Structural Plate Structures

Metal structural plate Structures considered herein comprise pipe, arch and box Structures defined as:

- **Structural Plate Pipe**: A steel or aluminum structural plate around the entire circumference of a pipe shape. Structural plate pipes may contain multiple radiuses and plate thicknesses. Structural plate pipe shapes include but are not limited to round, ellipse, underpass, pipe-arch and pear.
- **Structural Plate Arch**: A steel or aluminum structural plate arch shape placed on reinforced concrete foundations. Structural plate arches may contain multiple radiuses and plate thicknesses.
- **Structural Plate Box**: A steel or aluminum structural plate box shape that meets the requirements or the LRFD-BDS, Article 12.9 placed on reinforced concrete foundations.

Design and construction of metal structural plate Structures shall conform to the LRFD-BDS, Article 12, and the AASHTO LRFD *Bridge Construction Specifications*, Section 26.

Steel structural plate shall not be used in locations conforming to Marine or Non-Marine: Corrosive environments as defined in Section 6.7.1.

When required, reinforced concrete splash walls shall extend from the top of footing or cap to Hydraulic Design Flood Elevation. The splash wall shall meet the following requirements:

1. The wall shall have a minimum thickness of 6.0 inches.
2. The wall shall be constructed from structural concrete with a minimum compressive strength of 4000 psi.
3. The wall may be constructed as a cantilever wall integral with the footing or a wall positively connected to the galvanized metal Structure. A positive connection shall consist of headed bolts, shear studs, or other means to physically connect the wall to the Structure. If connected to the footing, the designer should consider short dowels extending from the footing lap spliced to the remaining wall reinforcement. This allows the metal Structure to be installed and bolted without conflicting with wall reinforcement.

4. The wall shall be reinforced for temperature, shrinkage, and crack control as a minimum per the LRFD-BDS.
5. The exposed wall surface shall be finished with a Class 2 surface finish.
6. The wall shall not be used for attaching appurtenances such as root wads, cables etc. unless specifically designed for.
7. The designer should consult with metal plate supplier on the sequence of construction of the splash wall in relation to backfilling and indicate in the Plans any required sequences. If none are required, the sequence shall be left up to the Contractor.

Minimum backfill cover, over the top and on the sides of the Structure, shall be in accordance with the LRFD-BDS.

Where aluminum will contact concrete or grout, two coats of paint shall be applied to the aluminum at the contact surface in accordance with *Standard Specifications*, Section 7-08.3(2)D.

8.3.7 Design of Detention Vaults

Detention vaults are used for stormwater storage and are to be watertight. These Structures can be open at the top like a swimming pool, or completely enclosed and buried below ground. Detention vaults shall be designed in accordance with the LRFD-BDS and the following: Seismic design effects shall satisfy the requirements of ACI 350.3-06, *Seismic Design of Liquid-Containing Concrete Structures*. Requirements for Joints and jointing shall satisfy the requirements of ACI 350-06. Two references for tank design are the PCA publications *Rectangular Concrete Tanks*, Revised 5th Edition (1998) and *Design of Liquid-Containing Structures for Earthquake Forces* (2002).

The geotechnical field investigations and recommendations shall comply with the requirements given in the *Geotechnical Design Manual*. In addition to earth pressures, water tables, seismic design, and uplift, special consideration should be given to ensure differential settlement either does not occur or is included in the calculations for forces, crack control and water stops.

Buoyant forces from high ground water conditions should be investigated for permanent as well as construction load cases so the vault does not float. Controlling loading conditions may include backfilling an empty vault, filling the vault with stormwater before it is backfilled, or seasonal maintenance that requires draining the vault when there is a high-water table. In all Limit States, the buoyancy force (*WA*) load factor shall be taken as γ_{WA} = 1.25 in LRFD-BDS, Table 3.4.1-1. In the Strength Limit State, the load factors that resist buoyancy (γ_{DC}, γ_{DW}, γ_{ES}, Etc.) shall be their minimum values, in accordance with LRFD-BDS, Table 3.4.1-2 and the entire vault shall be considered empty.

During the vault construction, the water table shall be taken as the seal vent elevation or the top of the vault, if open at the top. In this case the load factors that resist buoyancy shall be their minimum values, except where specified as a construction load, in accordance with LRFD-BDS, Article 3.4.2.

In certain situations, tie-downs may be required to resist buoyancy forces. The resisting force (R_n) and resistance factors (ø) for tie-downs shall be provided by the Geotechnical Engineers. The buoyancy check shall be as follows:

For Buoyancy without Tie-Downs:

$(R_{RES} / R_{UPLIFT}) \geq 1.0$

For Buoyancy with Tie-Downs:

$(R_{RES} / [R_{UPLIFT} + øR_n]) \geq 1.0$

Where:

$R_{RES} = \left| \gamma_{DC} DC + \gamma_{DW} DW + \gamma_{ES} ES + \gamma_i Q_i \right|$

$R_{UPLIFT} = \left| \gamma_{WA} WA \right|$

ACI 350-06 has stricter criteria for cover and spacing of joints than the LRFD-BDS. Cover is not to be less than 2.0 inches (ACI 7.7.1), no metal or other material is to be within 1½ inches from the formed surface, and the maximum bar spacing shall not exceed 12 inches (ACI 7.6.5).

Crack control criteria is in accordance with LRFD-BDS, Article 5.6.7 with $\gamma_e = 0.5$ (In order to maintain a crack width of 0.0085 inches, in accordance with the commentary of 5.6.7).

Joints in the vault's top slab, bottom slab and walls shall allow dissipation of temperature and shrinkage stresses, thereby reducing cracking. The amount of temperature and shrinkage reinforcement is a function of reinforcing steel grade and length between joints (ACI Table 7.12.2-1). All joints shall have a shear key and a continuous and integral PVC waterstop with a 4-inch minimum width. The purpose of the waterstop is to prevent water infiltration and exfiltration. Joints having welded shear connectors with grouted keyways shall use ties spaced at 4′-0″ on center. Any modifications to these described joints shall be justified with calculations. The width of precast panels shall be increased to minimize the number of joints between precast units.

For cast-in-place walls in contact with liquid that are over 10′-0" in height, the minimum wall thickness is 12.0 inches. This minimum thickness is generally good practice for all external walls, regardless of height, to allow for 2.0 inches of cover as well as space for concrete placement and vibration.

After the forms are placed, the void left from the form ties shall be coned shaped, at least 1.0- inch in diameter and 1½ inches deep, to allow proper patching.

Detention vaults that need to be located within the prism supporting the Roadway are required to meet the following maintenance criteria. A by-pass piping system is required. Each cell in the vault shall hold no more than 1,200 gallons of water to facilitate maintenance and cleanout operations. Baffles shall be watertight. Access hatches shall be spaced no more than 50 feet apart. There shall be an access near both the inlet and the outfall. These two accesses shall allow for visual inspection of the inlet and outfall elements, in such a manner that a person standing on the ladder, out of any standing water, will be in reach of any grab handles, grates or screens. All other access hatches shall be over sump areas. All access hatches shall be a minimum 36.0-inches in diameter, have ladders that extend to the vault floor, and shall be designed to resist HL-93 Live Loads with applicable impact factors as described below.

Detention vaults that need to be located in the Roadway shall be oriented so that the access hatches are located outside the traveled lanes. Lane closures are usually required next to each access hatch for maintenance and inspection, even when the hatches are in 12′-0″ wide shoulders.

A 16-kip wheel load having the dynamic load allowance for deck joints, in LRFD-BDS, Table 3.6.2.1-1, shall be applied at the top of access hatches and risers. The load path of this impact force shall be shown in the calculations.

Minimum vault dimensions shall be 4′-0″ wide and 7′-0″ tall, inside dimensions.

Original signed plans of all closed top detention vaults with access shall be forwarded to the Bridge Plans Engineer in the Bridge Projects Unit. This ensures that the Bridge Preservation Office will have the necessary inventory information for inspection requirements. A set of plans must be submitted to both the State Hydraulics Office and the Regional WSDOT Maintenance Office for plans approval.

8.3.8 Design of Tunnels

Tunnels are unique Structures in that the surrounding ground material is the structural material that carries most of the ground load. Therefore, geology has even more importance in tunnel construction than with above ground bridge Structures. In short, geotechnical site investigation is the most important process in planning, design, and construction of a tunnel. These Structures are designed in accordance with the AASHTO *LRFD Bridge Design Specifications*, *AASHTO LRFD Road Tunnel Design and Construction Guide Specifications*, 1st Edition, 2017 with current interims and AASHTO *Technical Manual for Design and Construction of Roadway Tunnels - Civil Elements*.

Tunnels are not a conventional Structure, and estimation of costs is more variable as size and length increase. Ventilation, safety access, fire suppression facilities, warning signs, lighting, emergency egress, drainage, operation, and maintenance are extremely critical issues associated with the design of tunnels and will require the expertise of geologists, tunnel experts and mechanical engineers.

For motor vehicle fire protection, a standard has been produced by the National Fire Protection Association. NFPA 502 – *Standard for Road Tunnels, Bridges, and Other Limited Access Highways* (NFPA 502). This document shall be used for all WSDOT tunnels. NFPA 502, uses tunnel length to dictate minimum fire protection requirements:

300 feet or less: no fire protection requirements
300 to 800 feet: minor fire protection requirements
800 feet or more: major fire protection requirements

Some recent WSDOT tunnel projects are:

I-90 Mt. Baker Ridge Tunnel Bore Contract: 3105 Bridge No.: 90/24N

This 1,500-foot-long tunnel is part of the major improvement of Interstate 90. Work was started in 1983 and completed in 1988. The net interior diameter of the bored portion, which is sized for vehicular traffic on two levels with a bike/pedestrian corridor on the third level, is 63.5 feet. The project is the world's largest diameter tunnel in soft ground, which is predominantly stiff clay. Construction by a stacked-drift method resulted in minimal distortion of the liner and insignificant disturbance at the ground surface above.

Jct. I-5 SR 526 E-N Tunnel Ramp Contract: 4372 Bridge No.: 526/22E-N

This 465-foot-long tunnel, an example of the cut and cover method, was constructed in 1995. The interior dimensions were sized for a 25-foot-wide one lane ramp Roadway with a vertical height of 18 feet. The tunnel was constructed in three stages. 3- and 4-foot diameter shafts for the walls were placed first, a 2.0-foot-thick cast-in-place top slab was placed second and then the tunnel was excavated, lined, and finished.

I-5 Sleater-Kinney Bike/Ped. Tunnel Contract: 6031 Bridge No.: 5/335P

This 122-foot-long bike and pedestrian tunnel was constructed in 2002 to link an existing path along I-5 under busy Sleater-Kinney Road. The project consisted of precast prestressed slab units and soldier pile walls. Construction was staged to minimize traffic disruptions.

8.4 Bridge Standard Drawings

Structural Earth Walls

8.1-A2-1 SEW Wall Elevation (PDF 50KB) (DWG 36KB)
8.1-A2-2 SEW Wall Section (PDF 90KB) (DWG 51KB)

Tie Back Walls

8.1-A3-1 Soldier Pile/Tieback Wall Elevation (PDF 61KB) (DWG 44KB)
8.1-A3-2 Soldier Pile/Tieback Walls Details A (PDF 194KB) (DWG 200KB)
8.1-A3-3 Soldier Pile/Tieback Walls Details B (PDF 200KB) (DWG 210KB)
8.1-A3-4 Soldier Pile/Tieback Walls Details (PDF 144KB) (DWG 146KB)
8.1-A3-5 Soldier Pile/Tieback Walls Fascia Panel Details (PDF 127KB) (DWG 136KB)
8.1-A3-6 Soldier Pile/Tieback Wall Perm Ground Anchor Details (PDF 153KB) (DWG 128KB)

Soil Nail Wall

8.1-A4-1 Soil Nail Wall Elevation (PDF 75KB) (DWG 81KB)
8.1-A4-2 Soil Nail Wall Typical Section (PDF 103KB) (DWG 115KB)
8.1-A4-3 Soil Nail Wall Fascia Epoxy Coated (PDF 85KB) (DWG 60KB)
8.1-A4-4 Soil Nail Wall Fascia Encapsulated (PDF 111KB) (DWG 96KB)

Noise Barrier

8.1-A5-1 Noise Barrier on Bridge (PDF 48KB) (DWG 39KB)

Cable Fence

8.1-A6-3 Cable Fence Details 1 of 3 (PDF 74KB) (DWG 68KB)
8.1-A6-4 Cable Fence Details 2 of 3 (PDF 74KB) (DWG 68KB)
8.1-A6-5 Cable Fence Details 3 of 3 (PDF 166KB) (DWG 160KB)

Buried Structures (Precast)

8.3-A1-1 Geometrics Table (PDF 74KB) (DWG 68KB)
8.3-A1-2 Split Box & Three-Sided Structure General Notes (PDF 94KB)(DWG 228KB)
8.3-A1-3 Split Box General Load Combinations (PDF 80KB) (DWG 78KB)
8.3-A1-4 Three-Sided Structure General Load Combinations (PDF 80KB) (DWG 78KB)

Split Boxes Structures (Precast)

8.3-A2-1 Split Box SB20 – SB25 Series (PDF 74KB) (DWG 68KB)
8.3-A2-2 Split Box Segment Layout Plan and Elevation (PDF 82KB) (DWG 78KB)
8.3-A2-3 Split Box Typical Section (PDF 803KB) (DWG 91KB)
8.3-A2-4 Split Box ~ Slab Typical Section (PDF 107KB) (DWG 235KB)
8.3-A2-5 Split Box Unit Geometric Details (PDF 68KB) (DWG 75KB)
8.3-A2-6 Split Box Unit Reinforcement Details (PDF 68KB) (DWG 76KB)
8.3-A2-7 Split Box Joint Sealing Details (PDF 88KB) (DWG 67KB)
8.3-A2-8 Split Box Tie Plate Connection Details (PDF 74KB) (DWG 68KB)

Three-Sided Structures (Precast)

8.3-A3-1 Three-Sided FC20 – FC40 Series (PDF 74KB) (DWG 68KB)
8.3-A3-2 Three-Sided VC45 – VC50 Series (PDF 74KB) (DWG 68KB)
8.3-A3-3 Three-Sided VC55 – VC60 Series (PDF 74KB) (DWG 68KB)
8.3-A3-4 Three-Sided Foundation Connection Joint Details (PDF 78KB) (DWG 81KB)
8.3-A3-5 Three-Sided Longitudinal Joint Details (PDF 68KB) (DWG 88KB)

Buried Structure Design Examples

8.3-A4-1 Split Box Buried Structure (PDF 254KB)
8.3-A4-2 Three-Sided Buried Structure (PDF 275KB)
8.3-A4-3 Soil-Structure Interaction (Racking) Analysis (PDF 275KB)

8.5 Appendices

Appendix 8.1-A1 Summary of Design Specification Requirements for Walls

Appendix 8.1-A1 Summary of Design Specification Requirements for Walls

Wall Types	Design Specifications	
Preapproved Proprietary Structural Earth Walls	General	Design shall be based on current editions, including current interims, of the following documents: AASHTO LRFD Bridge Design Specifications, WSDOT *Geotechnical Design Manual* (GDM), and WSDOT BDM.
	Seismic	AASHTO Guide Specifications for LRFD Seismic Bridge Design using the USGS 2014 Seismic Hazard Maps with Seven Percent Probability of Exceedance in 75 yrs. (1000 yr. Return Period) and the site coefficients or site-specific procedure provided in the WSDOT BDM Chapter 4.
	Traffic Barrier	Moment slab barrier shall be designed in accordance with the WSDOT BDM and the AASHTO LRFD Bridge Design Specifications section A13.3 for Concrete Railings considering a minimum TL-4 impact load, unless otherwise specified in the Contract Plans or Contract Special Provisions.
Non-Preapproved Proprietary Structural Earth Walls	General	Design shall be based on current editions, including current interims, of the following documents: AASHTO LRFD Bridge Design Specifications, WSDOT GDM, and WSDOT BDM.
	Seismic	AASHTO Guide Specifications for LRFD Seismic Bridge Design using the USGS 2014 Seismic Hazard Maps with Seven Percent Probability of Exceedance in 75 yrs. (1000 yr. Return Period) and the site coefficients or site-specific procedure provided in the WSDOT BDM Chapter 4.
	Traffic Barrier	Moment slab barrier shall be designed in accordance with the WSDOT BDM and the AASHTO LRFD Bridge Design Specifications section A13.3 for Concrete Railings considering a minimum TL-4 impact load, unless otherwise specified in the Contract Plans or Contract Special Provisions.
Standard Plan Geosynthetic Walls	General	Current Standard Plan Geosynthetic Walls are designed in accordance with the design criteria listed in the GDM.
	Seismic	AASHTO Guide Specifications for LRFD Seismic Bridge Design using the USGS 2014 Seismic Hazard Maps with Seven Percent Probability of Exceedance in 75 yrs. (1000 yr. Return Period).
	Traffic Barrier	Traffic barriers to be constructed on Standard Plan or Non-Standard Geosynthetic Walls shall be designed in accordance with the WSDOT BDM and the AASHTO LRFD Bridge Design Specifications section A13.3 for Concrete Railings considering a minimum TL-4 impact load.
Non-Standard Geosynthetic Walls	General	Design shall be based on current editions, including current interims, of the following documents: AASHTO LRFD Bridge Design Specifications, WSDOT GDM, and WSDOT BDM.
	Seismic	AASHTO Guide Specifications for LRFD Seismic Bridge Design using the USGS 2014 Seismic Hazard Maps with Seven Percent Probability of Exceedance in 75 yrs. (1000 yr. Return Period) and the site coefficients or site-specific procedure provided in the WSDOT BDM Chapter 4.
	Traffic Barrier	Special design barriers to be constructed on Standard Plan or Non-Standard Geosynthetic Walls shall be designed in accordance with the WSDOT BDM and the AASHTO LRFD Bridge Design Specifications section A13.3 for Concrete Railings considering a minimum TL-4 impact load.

Wall Types	Design Specifications	
Standard Plan Reinforced Concrete Walls	**General**	Standard Plan D-10.10 thru D-10.45 walls are designed in accordance with AASHTO LRFD Bridge Design Specifications 4th Edition 2007 and interims through 2008 and the WSDOT GDM Nov. 2008. Standard Plan D-20.10 walls are designed in accordance with AASHTO LRFD Bridge Design Specifications 9th Edition 2020, WSDOT BDM June 2022, and the WSDOT GDM February 2022.
	Seismic	AASHTO Guide Specifications for LRFD Seismic Bridge Design using 2002 U.S. Geological Survey (USGS) National Seismic Hazard Model (NSHM).
	Traffic Barrier	Standard Plan D-10.10 thru D-10.45 walls are designed for TL-4 impact loading distributed over 48 ft at the base of wall.
Non-Standard Reinforced Concrete Walls	**General**	Non-standard reinforced concrete walls shall be designed in accordance with the current editions, including current interims, of the following documents: AASHTO LRFD Bridge Design Specifications, WSDOT GDM, and WSDOT BDM.
	Seismic	AASHTO Guide Specifications for LRFD Seismic Bridge Design using the USGS 2014 Seismic Hazard Maps with Seven Percent Probability of Exceedance in 75 yrs. (1000 yr. Return Period) and the site coefficients or site-specific procedure provided in the WSDOT BDM Chapter 4.
	Traffic Barrier	WSDOT BDM and the AASHTO LRFD Bridge Design Specifications section A13.3 for Concrete Railings considering a minimum TL-4 impact load. F_t is distributed over L_t at the top of barrier. Load from top of barrier is distributed at a 45-degree angle into the wall.
Soldier Pile Walls With & Without Tiebacks	**General**	Design shall be based on current editions, including current interims, of the following documents: AASHTO LRFD Bridge Design Specifications, WSDOT GDM, and WSDOT BDM.
	Seismic	AASHTO Guide Specifications for LRFD Seismic Bridge Design using the USGS 2014 Seismic Hazard Maps with Seven Percent Probability of Exceedance in 75 yrs. (1000 yr. Return Period) and the site coefficients or site-specific procedure provided in the WSDOT BDM Chapter 4.
	Traffic Barrier	AASHTO LRFD Bridge Design Specifications section A13.3 for Concrete Railings considering a minimum TL-4 impact load. Ft is distributed over Lt at the top of barrier. Load from top of barrier is distributed downward into the wall spreading at a 45-degree angle.
Standard Plan Noise Barrier Walls	**General**	Standard Plans D-2.36 and D-2.46 are designed in accordance with AASHTO LRFD Bridge Design Specifications 6th Edition 2012 and interims through 2013.
	Seismic	Standard Plans D-2.36 and D-2.46 are designed in accordance with AASHTO LRFD Bridge Design Specifications 1000-year map design acceleration.
	Traffic Barrier	Standard Plan D-2.46 may accommodate a MASH compliant concrete barrier having a railing test level of TL-4 or less. The concrete barrier shall be located as shown in the Standard Plan.

Wall Types	Design Specifications	
Non-Standard Noise Barrier Walls	**General**	Design shall be based on current editions, including current interims, of the following documents: AASHTO LRFD Bridge Design Specifications, WSDOT GDM, and WSDOT BDM.
	Seismic	AASHTO Guide Specifications for LRFD Seismic Bridge Design using the USGS 2014 Seismic Hazard Maps with Seven Percent Probability of Exceedance in 75 yrs. (1000 yr. Return Period) and the site coefficients or site-specific procedure provided in the WSDOT BDM Chapter 4.
	Traffic Barrier	WSDOT BDM and the AASHTO LRFD Bridge Design Specifications section A13.3 for Concrete Railings considering a minimum TL-4 impact load.
Soil Nail Walls	**General**	Design shall be based on current editions, including current interims, of the following documents: AASHTO LRFD Bridge Design Specifications, WSDOT GDM, and WSDOT BDM. The Geotechnical Engineer completes the internal design of the soil nail wall and provides recommendations for nail layout. The structural designer will layout the nail pattern. The geotechnical engineer will review the nail layout to ensure compliance with the Geotechnical recommendations. The structural designer shall design the temporary shotcrete facing as well as the permanent structural facing, including the bearing plates, and shear studs. Design of the cantilevered portions of the soil nail wall facing which typically occurs at the top, bottom, or ends of the wall shall be in accordance with current editions, including current interims, of the following documents: AASHTO LRFD Bridge Design Specifications (See Article 11.6 for conventional retaining walls), WSDOT GDM, and WSDOT BDM.
	Seismic	AASHTO Guide Specifications for LRFD Seismic Bridge Design using the USGS 2014 Seismic Hazard Maps with Seven Percent Probability of Exceedance in 75 yrs. (1000 yr. Return Period) and the site coefficients or site-specific procedure provided in the WSDOT BDM Chapter 4.
	Traffic Barrier	Moment slab barrier shall be designed in accordance with the WSDOT *Bridge Design Manual* and the AASHTO LRFD Bridge Design Specifications section A13.3 for Concrete Railings considering a minimum TL-4 impact load.
Non-Standard Non-Proprietary Walls Gravity Blocks, Gabion Walls	**General**	Design shall be based on current editions, including current interims, of the following documents: AASHTO LRFD Bridge Design Specifications, WSDOT GDM, and WSDOT BDM.
	Seismic	AASHTO Guide Specifications for LRFD Seismic Bridge Design using the USGS 2014 Seismic Hazard Maps with Seven Percent Probability of Exceedance in 75 yrs. (1000 yr. Return Period) and the site coefficients or site-specific procedure provided in the WSDOT BDM Chapter 4.
	Traffic Barrier	WSDOT BDM and the AASHTO LRFD Bridge Design Specifications section A13.3 for Concrete Railings considering a minimum TL-4 impact load.

8.99 References

1. AASHTO. Current Edition. *AASHTO LRFD Bridge Design Specifications*, Current Edition with interims through current year, AASHTO, Washington, D.C.
2. AASHTO. 2014. *AASHTO LRFD Bridge Design Specifications*, 4th Edition with interims through 2008, AASHTO, Washington, D.C.
3. AASHTO. 2002. *AASHTO Standard Specifications for Highway Bridges*, 17th Edition with interims and errata through 2005, AASHTO, Washington, D.C.
4. WSDOT. Current Edition. *Standard Specifications for Road, Bridge, and Municipal Construction*, Current Edition and amendments through current year, WSDOT, Olympia, WA.
5. *Design Manual* M 22-01
6. *Geotechnical Design Manual* M 46-03
7. *Standard Plans* M 21-01
8. FHWA. 2015. *Soil Nail Walls Reference Manual*, FHWA-NHI-14-007, FHWA GEC 007, FHWA, Washington D.C.
9. AASHTO. Current Edition. *AASHTO Guide Specifications for LRFD Seismic Bridge Design*, Current Edition and Interims. AASHTO, Washington D.C.
10. AASHTO. Current Edition. *AASHTO LRFD Bridge Construction Specifications*, Current Edition with interims through current year, AASHTO, Washington D.C.
11. AASHTO. 1989. *Guide Specifications for Structural Design of Sound Barriers* and interims through 2002, AASHTO, Washington D.C.
12. AASHTO. Current Edition. AASHTO *LRFD Road Tunnel Design and Construction Guide Specifications*, Current Edition with Interims through current year, AASHTO, Washington D.C.
13. AASHTO *Technical Manual for Design and Construction of Road Tunnels – Civil Elements*, FHWA-NHI-10-034, FHWA, Washington D.C.
14. ACI. 2006. *Seismic Design of Liquid-Containing Concrete Structures and Commentary*, ACI 350.3-06 and Errata through 2008, ACI, Farmington Hills, MI
15. ACI. 2006. *Code Requirements for Environmental Engineering Concrete Structures*, ACI 350-06 and Errata through 2015, ACI, Farmington Hills, MI.
16. Munshi, Javeed A. *Rectangular Concrete Tanks*, Rev. 5th Ed., PCA, 1998.
17. Miller, C. A. and Constantino, C. J. *Seismic Induced Earth Pressure in Buried Vaults*, PVP-Vol.271, Natural Hazard Phenomena and Mitigation, ASME, 1994, pp. 3-11.
18. Munshi, J. A. *Design of Liquid-Containing Concrete Structures for Earthquake Forces*, PCA, 2002.
19. NFPA 502, *Standard for Road Tunnels, Bridges, and Other Limited Access Highways*.

This page intentionally left blank.

Chapter 9 Bearings and Expansion Joints Contents

9.1 Expansion Joints 9-1
9.1.1 General Considerations 9-1
9.1.1.A Concrete Bridges 9-2
9.1.1.B Steel Bridges 9-2
9.1.2 General Design Criteria 9-3
9.1.2.A Shrinkage Effects 9-3
9.1.2.B Thermal Effects 9-3
9.1.3 Small Movement Range Joints 9-5
9.1.3.A Compression Seals 9-5
9.1.3.B Rapid-Cure Silicone Sealants 9-6
9.1.3.C Asphaltic Plug Joints 9-8
9.1.3.D Headers 9-9
9.1.3.E Bridge Paving Joint Seals 9-9
9.1.4 Medium Movement Range Joints 9-9
9.1.4.A Steel Sliding Plate Joints 9-9
9.1.4.B Strip Seal Joints 9-10
9.1.4.C Bolt-down Panel Joints 9-11
9.1.5 Large Movement Range Joints 9-12
9.1.5.A Steel Finger Joints 9-12
9.1.5.B Modular Expansion Joints 9-13
9.1.5.B.1 Operational Characteristics 9-13
9.1.5.B.2 Movement Design 9-15
9.1.5.B.3 Review of Shop Drawings and Structural Design Calculations 9-16
9.1.5.B.4 Construction Considerations 9-17

9.2 Bearings 9-18
9.2.1 General Considerations 9-18
9.2.2 Force Considerations 9-18
9.2.3 Movement Considerations 9-19
9.2.3.A Elastomeric and Fabric Pad Bearings 9-19
9.2.3.B HLMR Bearings 9-19
9.2.4 Detailing Considerations 9-19
9.2.5 Bearing Types 9-20
9.2.5.A Elastomeric Bearings 9-20
9.2.5.B Fabric Pad Sliding Bearings 9-22
9.2.5.B.1 Fabric Pad Design 9-23
9.2.5.B.2 PTFE 9-23
9.2.5.C Pin Bearings 9-24
9.2.5.D Rocker and Roller Type Bearings 9-24
9.2.5.E Spherical Bearings 9-24
9.2.5.F Disk Bearings 9-25

9.2.6 Miscellaneous Details . . . 9-25
9.2.6.A Temporary Support before Grouting Masonry Plate . . . 9-25
9.2.6.A.1 Shim Packs . . . 9-25
9.2.6.A.2 Two-step Grouting with Cast Sleeves . . . 9-25
9.2.6.B Anchor Bolts . . . 9-26
9.2.7 Contract Drawing Representation . . . 9-26
9.2.8 Shop Drawing Review . . . 9-26
9.2.9 Bearing Replacement Considerations . . . 9-26
9.3 Seismic Isolation Bearings . . . 9-27
9.3.1 General Considerations . . . 9-27
9.3.2 Suitability and Selection Considerations . . . 9-27
9.3.3 General Design Criteria . . . 9-28
9.3.4 Seismic Isolation Bearing Submittal Requirements . . . 9-28
9.3.4.A Shop Drawings . . . 9-29
9.3.4.B Bearing Materials and Fabrication . . . 9-29
9.3.4.C Paint . . . 9-29
9.3.4.D Bearing Specifications . . . 9-29
9.3.4.E Fabrication . . . 9-29
9.3.5 Seismic Isolation Bearing Review Process . . . 9-29
9.3.5.A Design Calculations . . . 9-30
9.3.5.B Shop Drawings . . . 9-30
9.3.6 Seismic Isolation Bearing Inspection . . . 9-31
9.3.6.A Fabrication Inspection . . . 9-31
9.3.6.B Field Inspection . . . 9-31
9.4 Bridge Standard Drawings . . . 9-32
9.4.1 Expansion Joints . . . 9-32

Chapter 9 Bearings and Expansion Joints

9.1 Expansion Joints

9.1.1 General Considerations

All bridges must accommodate, in some manner, environmentally and self-imposed phenomena that tend to make structures move in various ways. These movements come from several primary sources: thermal variations, concrete shrinkage, creep effects from prestressing, and elastic post-tensioning shortening. With the exception of elastic post-tensioning shortening, which generally occurs before expansion devices are installed, movements from these primary phenomena are explicitly calculated for expansion joint selection and design. Other movement-inducing phenomena include live loading (vertical and horizontal braking), wind, seismic events, and foundation settlement. Movements associated with these phenomena are generally either not calculated or not included in total movement calculations for purposes of determining expansion joint movement capacity.

With respect to seismic movements, it is assumed that some expansion joint damage may occur, that this damage is tolerable, and that it will be subsequently repaired. In cases where seismic isolation bearings are used, the expansion joints must accommodate seismic movements in order to allow the isolation bearings to function properly.

Expansion joints must accommodate cyclic and long-term structure movements in such a way as to minimize imposition of secondary stresses in the structure. Expansion joint devices must prevent water, salt, and debris infiltration to substructure elements below. Additionally, an expansion joint device must provide a relatively smooth riding surface over a long service life.

Expansion joint devices are highly susceptible to vehicular impact that results as a consequence of their inherent discontinuity. Additionally, expansion joints have often been relegated a lower level of importance by both designers and contractors. Many of the maintenance problems associated with in-service bridges relate to expansion joints.

One solution to potential maintenance problems associated with expansion joints is to use construction procedures that eliminate the joints from the bridge deck. The two most commonly used methods are called integral and semi-integral construction. These two terms are sometimes collectively referred to as jointless bridge construction.

In integral construction, concrete end diaphragms are cast monolithically with both the bridge deck and supporting pile substructure. In order to minimize secondary stresses induced in the superstructure, steel piles are generally used in their weak axis orientation relative to the direction of bridge movement. In semi-integral construction, concrete end diaphragms are cast monolithically with the bridge deck. Supporting girders rest on elastomeric bearings within an L-type abutment. Longer semi-integral bridges generally have reinforced concrete approach slabs at their ends. Approach slab anchors, in conjunction with a compression seal device, connect the monolithic end diaphragm to the approach slab. Longitudinal movements are accommodated by diaphragm movement relative to the approach slab, but at the same time resisted by soil passive pressure against the end diaphragm.

Obviously, bridges cannot be built incrementally longer without eventually requiring expansion joint devices. The incidence of approach pavement distress problems increases markedly with increased movement that must be accommodated by the end diaphragm pressing against the backfill. Approach pavement distress includes pavement and backfill settlement and broken approach slab anchors.

Washington State Department of Transportation (WSDOT) has implemented jointless bridge design by using semi-integral construction. Office policy for concrete and steel bridge design is as follows:

9.1.1.A Concrete Bridges

Semi-integral design is used for prestressed concrete girder bridges under 450 feet long and for post-tensioned spliced concrete girder and cast-in-place post-tensioned concrete box girder bridges under 400 feet long. Use L-type abutments with expansion joints at the bridge ends where bridge length exceeds these values. In situations where bridge skew angles exceed 30 degrees, consult the Bearing and Expansion Joint Specialist and the State Bridge Design Engineer for recommendations and approval.

9.1.1.B Steel Bridges

Use L-type abutments with expansion joints at the ends for multiple-span bridges. Semi-integral construction may be used in lieu of expansion joints for single span bridges under 300 feet with the approval of the State Bridge Design Engineer. In situations where the bridge skew exceeds 30 degrees, consult the Bearing and Expansion Joint Specialist and the State Bridge Design Engineer for recommendations and approval.

In all instances, the use of intermediate expansion joints should be avoided wherever possible. The following table provides guidance regarding maximum bridge superstructure length beyond which the use of either intermediate expansion joints or modular expansion joints at the ends is required.

Superstructure Type	Maximum Length (Western WA)		Maximum Length (Eastern WA)	
	Semi-Integral	L-Abutment	Semi-Integral	L-Abutment
Concrete Superstructure				
Prestressed Girder*	450 ft	900 ft	450 ft	900 ft
P.T. Spliced Girder**	400 ft	700 ft***	400 ft	700 ft***
C.I.P.–P.T. box girder	400 ft	700 ft ***	400 ft	700 ft***
Steel Superstructure				
Plate Girder Box girder	300 ft	900 ft	300 ft	700 ft

* Based upon 0.16 in. creep shortening per 100 feet of superstructure length and 0.12 inch shrinkage shortening per 100 feet of superstructure length

** Based upon 0.31 in. creep shortening per 100 feet of superstructure length and 0.19 inch shrinkage shortening per 100 feet of superstructure length

*** Can be increased to 800 ft. if the joint opening at 64º F at time of construction is specified in the expansion joint table to be less than the minimum installation width of 1½ inches. This condition is acceptable if the gland is already installed when steel shapes are placed in the blockout. Otherwise (for example, staged construction) the gland would need to be installed at temperature less than 45º F.

Because the movement restriction imposed by a bearing must be compatible with the movements allowed by the adjacent expansion joint, expansion joints and bearings must be designed interdependently and in conjunction with the anticipated behavior of the overall structure.

A plethora of manufactured devices exists to accommodate a wide range of expansion joint total movements. Expansion joints can be broadly classified into three categories based upon their total movement range as follows:

Small Movement JointsTotal Movement Range < 1¾ in.
Medium Movement Joints1¾ in. < Total Movement Range < 5 in.
Large Movement JointsTotal Movement Range > 5 in.

9.1.2 General Design Criteria

Expansion joints must be sized to accommodate the movements of several primary phenomena imposed upon the bridge following installation of its expansion joint devices. Concrete shrinkage, thermal variation, and long-term creep are the three most common primary sources of movement. Calculation of the movements associated with each of these phenomena must include the effects of superstructure type, tributary length, fixity condition between superstructure and substructure, and pier flexibilities.

9.1.2.A Shrinkage Effects

Accurate calculation of shrinkage as a function of time requires that average ambient humidity, volume-to-surface ratios, and curing methods be taken in consideration as summarized in LRFD-BDS Article 5.4.2.3.3. Because expansion joint devices are generally installed in their respective blockouts at least 30 to 60 days following concrete deck placement, they must accommodate only the shrinkage that occurs from that time onward. For most situations, that shrinkage strain can be assumed to be 0.0002 for normal weight concrete in an unrestrained condition. This value must be corrected for restraint conditions imposed by various superstructure types.

$$\Delta L_{shrink} = \beta \cdot \mu \cdot L_{trib} \qquad (9.1.2\text{-}1)$$

Where:

L_{trib} = Tributary length of the structure subject to shrinkage
β = Ultimate shrinkage strain after expansion joint installation; estimated as 0.0002 in lieu of more refined calculations
μ = Restraint factor accounting for the restraining effect imposed by superstructure elements installed before the concrete slab is cast
= 0.0 for steel girders, 0.5 for precast prestressed concrete girders, 0.8 for concrete box girders and T-beams, 1.0 for concrete flat slabs

9.1.2.B Thermal Effects

Bridges are subject to all modes of heat transfer: radiation, convection, and conduction. Each mode affects the thermal gradients induced and deflection patterns generated in a bridge superstructure differently. Climatic influences vary geographically resulting in different seasonal and diurnal average temperature variations. Additionally, different types of construction have different thermal “inertia” properties. For example, a massive concrete box girder bridge will be much slower to respond to an imposed thermal stimulus than would a steel plate girder bridge composed of many relatively thin steel elements.

Variation in the superstructure average temperature produces uniform elongation or shortening. Uniform thermal movement range is calculated using the maximum and minimum anticipated bridge superstructure average temperatures in accordance with LRFD-BDS Article 3.12.2.1 Procedure A. For the purpose of establishing the maximum and minimum design temperatures using Procedure A, most of western Washington

is classified as a moderate climate. Eastern Washington and higher elevation areas of western Washington having more than 14 days per year with an average temperature below 32˚F are classified as a cold climate. The maximum and minimum design temperatures, T_U and T_L, respectively, used for uniform thermal movement effects, taken from LRFD-BDS Table 3.12.2.1-1 are:

Moderate Climate:

Concrete Bridges:	10˚F to 80˚F
Steel Bridges:	0˚F to 120˚F

Cold Climate:

Concrete Bridges:	0˚F to 80˚F
Steel Bridges:	-30˚F to 120˚F

Total unfactored thermal movement range is then calculated as:

$$\Delta L_{temp} = \alpha \cdot L_{trib} \cdot \delta T \qquad (9.1.2\text{-}2)$$

Where:

L_{trib} = Tributary length of the structure subject to thermal variation
α = Coefficient of thermal expansion; 0.000006 in./in./˚F for concrete and 0.0000065 in./in./˚F for steel
δT = Bridge superstructure average temperature range as a function of bridge type and location

As noted in LRFD-BDS Article 3.4.1, the larger of the two load factors for uniform temperature, γ_{TU}, provided in LRFD-BDS Table 3.4.1-1 shall be used to calculate factored uniform thermal movements. Design of expansion joints requires calculation of the maximum and minimum temperatures associated with the factored temperature range. Assuming that the unfactored and factored temperature range are centered upon each other, the factored minimum and maximum design temperatures are:

$$T_{min} = .5 \cdot (T_L + T_U) - .5 \cdot \gamma_{TU} \cdot (T_U - T_L)$$
$$T_{max} = .5 \cdot (T_L + T_U) + .5 \cdot \gamma_{TU} \cdot (T_U - T_L)$$

Where

T_{min} = Minimum factored design temperature
T_{max} = Maximum factored design temperature
T_L = Minimum (unfactored) design temperature
T_U = Maximum (unfactored) design temperature
γ_{TU} = Load Factor as specified in LRFD-BDS

In accordance with the *Standard Specifications*, contract drawings state dimensions at the normal temperature of 64˚F unless specifically noted otherwise. Construction and fabrication activities at average temperatures other than 64˚F require the Contractor or fabricator to adjust lengths of structural elements and concrete forms accordingly.

Some expansion joint devices are installed in pre-formed concrete blockouts sometime after the completion of the bridge deck. The expansion joint device must be cast into its respective blockout with a gap setting corresponding to the ambient superstructure average temperature at the time the blockouts are filled with concrete. In order to accomplish this, expansion device gap settings must be specified on the contract drawings as a function of superstructure ambient average temperature. Generally, these settings are specified for temperatures of 40˚F, 64˚F, and 80˚F.

9.1.3 Small Movement Range Joints

Elastomeric compression seals, poured sealants, asphaltic plugs, pre-formed closed cell foam, epoxy-bonded elastomeric glands, steel sliding plates, and bolt-down elastomeric panels have all been used in the past for accommodating small movement ranges. The current policy is to use compression seals and rapid-cure silicone sealants almost exclusively.

9.1.3.A Compression Seals

Compression seals are continuous manufactured elastomeric elements, typically with extruded internal web systems, installed within an expansion joint gap to effectively seal the joint against water and debris infiltration. Compression seals are held in place by mobilizing friction against adjacent vertical joint faces. Design philosophy requires that they be sized and installed to always be in a state of compression.

Compression seals can be installed against smooth vertical concrete faces or against steel armoring. When installed against concrete, special concrete nosing material having enhanced impact resistance may be used, particularly on rehabilitation projects. Polyester concrete and elastomeric concrete have been used successfully. Consult the Bearing and Expansion Joint Specialist for current policy.

Each elastomeric compression seal shall be furnished and installed as a single, continuous piece across the full width of the bridge deck. No field splices of the compression seal shall be allowed. For widening projects, a new compression seal shall be furnished and installed as a single, continuous piece across the full width of the original and widened portions of the roadway. Field splicing to the original elastomeric compression seal shall not be allowed.

Figure 9.1.3-1 Compression Seal Joint

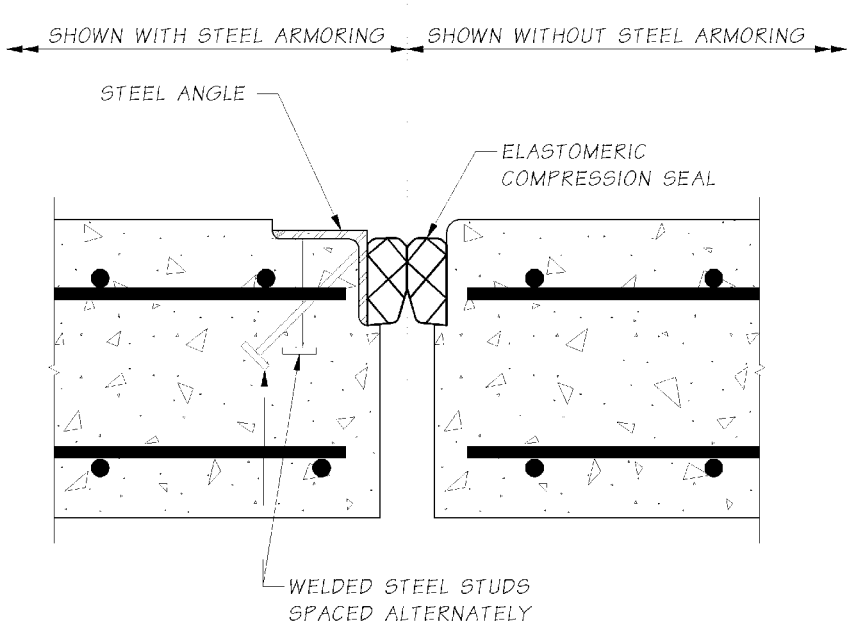

In design calculations, the minimum and maximum compressed widths of the seal are generally set at 40 percent and 85 percent of the uncompressed width. These measurements are perpendicular to the joint axis. It is generally assumed that the compressed seal width at the normal construction temperature of 64˚F is 60 percent of

its uncompressed width. For skewed joints, bridge deck movement must be separated into components perpendicular to and parallel to the joint axis. Shear displacement of the compression seal should be limited to a specified percentage of its uncompressed width, usually set at about 22 percent. Additionally, the expansion gap width should be set so that the compression seal can be replaced over a reasonably wide range of construction temperatures. Manufacturers' catalogues generally specify the minimum expansion gap widths into which specific size compression seals can be installed. The expansion gap width should be specified on the contract drawings as a function of the superstructure average temperature.

Compression seal movement design relationships can be expressed as:

$\Delta L_{temp\text{-}normal} = \Delta L_{temp} \cdot \cos\theta$ [thermal movement normal to joint]

$\Delta L_{temp\text{-}parallel} = \Delta L_{temp} \cdot \sin\theta$ [thermal movement parallel to joint]

$\Delta L_{shrink\text{-}normal} = \Delta L_{shrink} \cdot \cos\theta$ [shrinkage movement normal to joint]

$\Delta L_{shrink\text{-}parallel} = \Delta L_{shrink} \cdot \sin\theta$ [shrinkage movement parallel to joint]

$W_{min} = W_{install} - [(T_{max} - T_{install})/(T_{max} - T_{min})] \cdot \Delta L_{temp\text{-}normal} > 0.40 \cdot W$

$W_{max} = W_{install} + [(T_{install} - T_{min})/(T_{max} - T_{min})] \cdot \Delta L_{temp\text{-}normal} + \Delta L_{shrink\text{-}normal} < 0.85 \cdot W$

Where:

θ = skew angle of the expansion joint, measured with respect to a line perpendicular to the bridge longitudinal axis

W = uncompressed width of the compression seal

$W_{install}$ = expansion gap width at installation

$T_{install}$ = superstructure temperature at installation

W_{min} = minimum expansion gap width

W_{max} = maximum expansion gap width

T_{min} = minimum superstructure average temperature

T_{max} = maximum superstructure average temperature

Algebraic manipulation yields:

$W > (\Delta L_{temp\text{-}normal} + \Delta L_{shrink\text{-}normal})/0.45$

$W > (\Delta L_{temp\text{-}parallel} + \Delta L_{shrink\text{-}parallel})/0.22$

Now, assuming $W_{install} = 0.6 \cdot W$,

$W_{max} = 0.6 \cdot W + [(T_{install} - T_{min})/(T_{max} - T_{min})] \cdot \Delta L_{temp\text{-}normal} + \Delta L_{shrink\text{-}normal} < 0.85 \cdot W$

Rearranging yields:

$W > 4 \cdot [(T_{install} - T_{min})/(T_{max} - T_{min}) \cdot \Delta L_{temp\text{-}normal} + \Delta L_{shrink\text{-}normal}]$

9.1.3.B Rapid-Cure Silicone Sealants

Durable low-modulus poured sealants provide watertight expansion joint seals in both new construction and rehabilitation projects. Most silicone sealants possess good elastic performance over a wide range of temperatures while demonstrating high levels of resistance to ultraviolet and ozone degradation. Other desirable properties include self-leveling and self-bonding characteristics.

Rapid-cure silicone sealants are particularly good candidates for rehabilitation in situations where significant traffic disruption consequential to extended traffic lane closure is unacceptable. Additionally, unlike compression seals, rapid-cure silicone sealants do not require straight, parallel substrate surfaces in order to create a watertight seal.

Rapid-cure silicone sealants can be installed against either concrete or steel. It is extremely critical that concrete or steel substrates be thoroughly cleaned before the sealant is installed. Some manufacturers require application of specific primers onto substrate surfaces prior to sealant installation in order to enhance bonding. Consult the Bearing and Expansion Joint Specialist for specifics.

Figure 9.1.3-2 Rapid-cure Silicone Sealants Joint

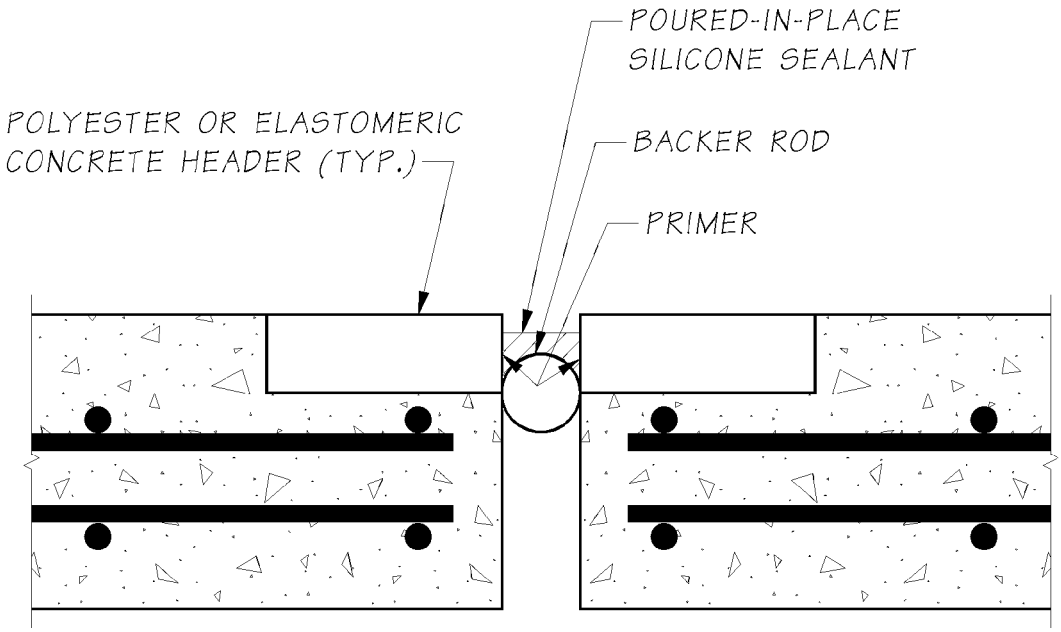

Rapid-cure silicone sealants should be designed based upon the manufacturer's recommendations. Maximum and minimum working widths of the poured sealant joint are generally recommended as a percentage of the sealant width at installation. Depending upon the manufacturer, these joints can accommodate tensile movements of up to 100 percent and compressive movements of up to 50 percent of the sealant width at installation. A minimum recess is typically required between the top of the roadway surface and the top of the sealant surface. This recess is critical in assuring that tires will not contact the top surface of the sealant and initiate its debonding from substrate material.

It is important to recognize that the maximum allowable opening and closing design movements are a function of the joint width at the time the sealant is poured. As such, consideration should be given that the poured sealant can be installed over a reasonably wide range of construction temperatures and still perform, over the full factored uniform temperature range, within the allowable movement limits recommended by the manufacturer. In some instances, it may be necessary to stipulate that the Contractor install the sealant within a more restrictive range of bridge temperatures than the commonly assumed 40˚F to 80˚F.

For an existing expansion joint having a known expansion gap width at a known bridge uniform temperature, maximum and minimum installation temperatures can be calculated. Assuming that all shrinkage and long-term creep effects have already occurred, it can be shown, algebraically, that

$$T_{install,min} = \frac{1}{1-\zeta_c}\left[T_{max} - \zeta_c \cdot T - \frac{\zeta_c \cdot W_T}{\alpha \cdot L_{trib}}\right]$$

$$T_{install,max} = \frac{1}{1+\zeta_e}\left[T_{min} + \zeta_e \cdot T + \frac{\zeta_e \cdot W_T}{\alpha \cdot L_{trib}}\right]$$

Where

W_T = existing expansion gap width
T = bridge uniform temperature at time W_T is measured
ζ_c = maximum allowable closure (contraction) of the joint as a fraction of its width at the time the sealant is installed, as recommended by the manufacturer for design purposes
ζ_e = maximum allowable opening (expansion) of the joint as a fraction of its width at the time the sealant is installed, as recommended by the manufacturer for design purposes
α = coefficient of thermal expansion of the bridge superstructure
L_{trib} = tributary length contributing to uniform thermal movement
T_{min} = minimum factored design temperature
T_{max} = maximum factored design temperature

9.1.3.C Asphaltic Plug Joints

Asphaltic plug joints consist of a flexible polymer modified asphalt installed in a preformed blockout atop a steel plate and backer rod. In theory, asphaltic plug joints provided a seamless smooth riding surface. However, when subjected to high traffic counts, heavy trucks, or substantial acceleration/deceleration traction, the polymer modified asphalt tends to creep, migrating out of the blockouts. As a consequence, WSDOT no longer specifies the use of asphaltic plug joints.

Figure 9.1.3-3 Asphaltic Plug Joint

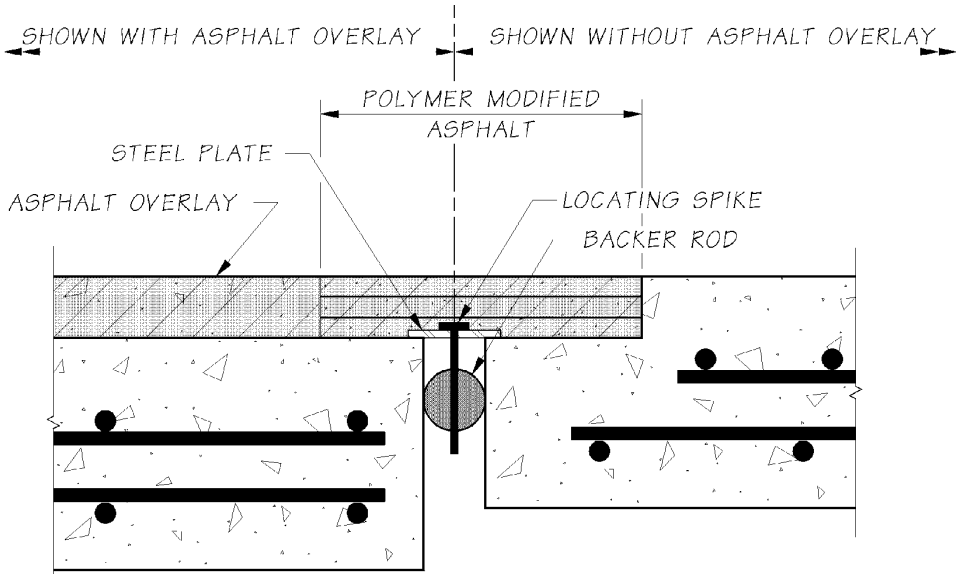

9.1.3.D Headers

Expansion joint headers for new construction are generally the same Class 4000D structural concrete as used for the bridge deck and cast integrally with the deck.

Expansion joint headers installed as part of a rehabilitative and/or overlay project are constructed differently.

Being a flexible material, hot mix asphalt (HMA) cannot provide rigid lateral support to an elastomeric compression seal or a rapid cure silicone sealant bead. Therefore, rigid concrete headers must be constructed on each side of such an expansion joint when an HMA overlay is installed atop an existing concrete deck. These headers provide a rigid lateral support to the expansion joint device and serve as a transition between the HMA overlay material and the expansion joint itself.

WSDOT allows either polyester concrete or elastomeric concrete for expansion joint headers. These two materials, which provide enhanced durability to impact in regard to other concrete mixes, shall be specified as alternates in the contract documents. General Special Provisions specify the material and construction requirements for polyester and elastomeric concrete.

Modified concrete overlay (MCO) material can provide rigid side support for an elastomeric compression seal or a rapid cure silicone sealant bead without the need for separately constructed elastomeric concrete or polyester concrete headers. This alternative approach requires the approval of the Bearing and Expansion Joint Specialist. Such modified concrete overlay headers may utilize welded wire fabric as reinforcement. Contract 7108 which includes Bridges No. 90/565N&S and 90/566N&S is an example.

9.1.3.E Bridge Paving Joint Seals

Sawcut joints with poured rubber are allowed on the bridge deck provided that the tributary length for calculating movement demand at the joint location does not exceed 50 feet and that the adverse consequence of leakage through the joint is minimal. This is applicable to both concrete bridge decks and to HMA overlays. Sawcut joints with poured rubber are not recommended where leakage through the deck could cause accelerated corrosion to structural steel elements, including steel bearing assemblies.

9.1.4 Medium Movement Range Joints

Steel sliding plates, strip seals, and bolt-down panel joints have all been used in the past for accommodating medium movement ranges. The current policy is to use strip seal joints almost exclusively.

9.1.4.A Steel Sliding Plate Joints

Two overlapping steel plates, one attached to the superstructure on each side of the joint, can be used to provide a smooth riding surface across an expansion joint. Unfortunately, steel sliding plates do not generally provide an effective barrier against intrusion of water and deicing chemicals into the joint and onto substructure elements. Consequently, these joints have been supplanted by newer systems, such as strip seals, with improved resistance to water penetration.

Figure 9.1.4-1 Steel Sliding Plate Joint

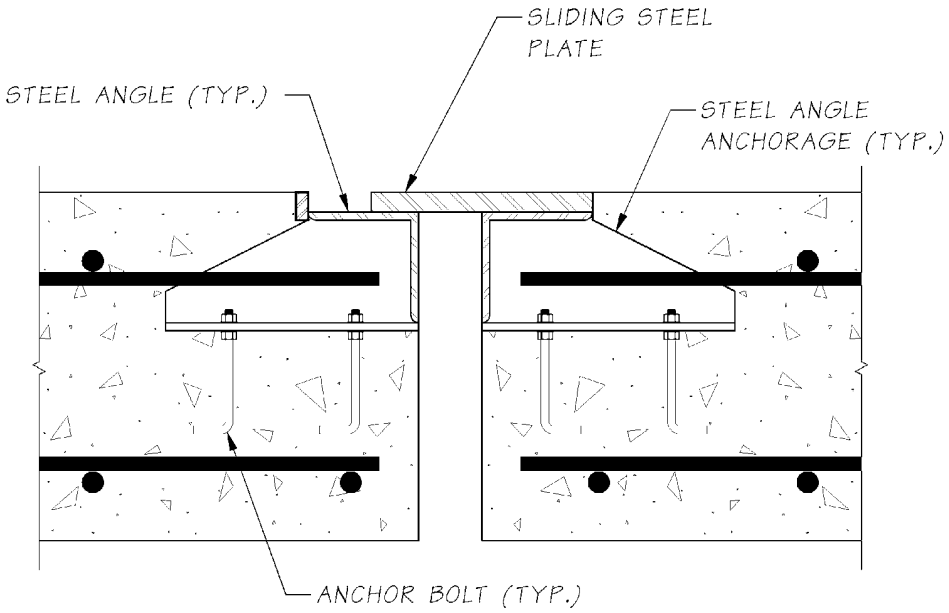

Before the advent of more modern systems, steel sliding plates were specified extensively. Their limited use today includes the following specific applications:

1. High pedestrian use sidewalks
2. Modular expansion joint upturns at traffic barriers
3. Roadway applications involving unusual movements (translation and large rotations) not readily accommodated by modular expansion joints.

In these applications, the sliding plates are generally galvanized or painted to provide corrosion resistance.

Repeated impact and corrosion have deteriorated many existing roadway sliding steel plate systems. In many instances, the anchorages connecting the sliding plate to the concrete deck have broken. When the integrity of the anchorages has been compromised, the steel sliding plates must generally be removed in their entirety and replaced with a new, watertight system. Where the integrity of the anchorages has not been compromised, sliding plates can often be retrofitted with poured sealants or elastomeric strip seals.

9.1.4.B Strip Seal Joints

An elastomeric strip seal system consists of a preformed elastomeric gland mechanically locked into metallic edge rails generally embedded into the concrete deck on each side of an expansion joint gap. Unfolding of the elastomeric gland accommodates movement. Steel studs are generally welded to the steel extrusions constituting the edge rails to facilitate anchorage to the concrete deck. Damaged or worn glands can be replaced with minimal traffic disruption.

The metal edge rails effectively armor the edges of the expansion joint, obviating the need for a special impact resistant concrete, usually required at compression seal and poured sealant joints. The designer must select either the standard or special anchorage. The special anchorage incorporates steel reinforcement bar loops welded to intermittent steel plates, which in turn are welded to the extrusion. The special anchorage is generally

used for very high traffic volumes or in applications subject to snowplow hits. In applications subject to snowplow hits and concomitant damage, the intermittent steel plates can be detailed to protrude slightly above the roadway surface in order to launch the snowplow blade and prevent it from catching on the forward extrusion.

The special anchorage requires a 9 inches deep blockout, as opposed to 7 inches deep for the standard anchorage. The standard anchorage is acceptable for high traffic volume expansion joint replacement projects where blockout depth limitations exist.

Metal edge rails may be field spliced using weld procedures provided by the strip seal expansion joint manufacturer. However, elastomeric strip seal elements shall not be field spliced. Each elastomeric strip seal element shall be furnished and installed as a single, continuous piece across the full width of the bridge deck.

Figure 9.1.4-2 Strip Seal Joint

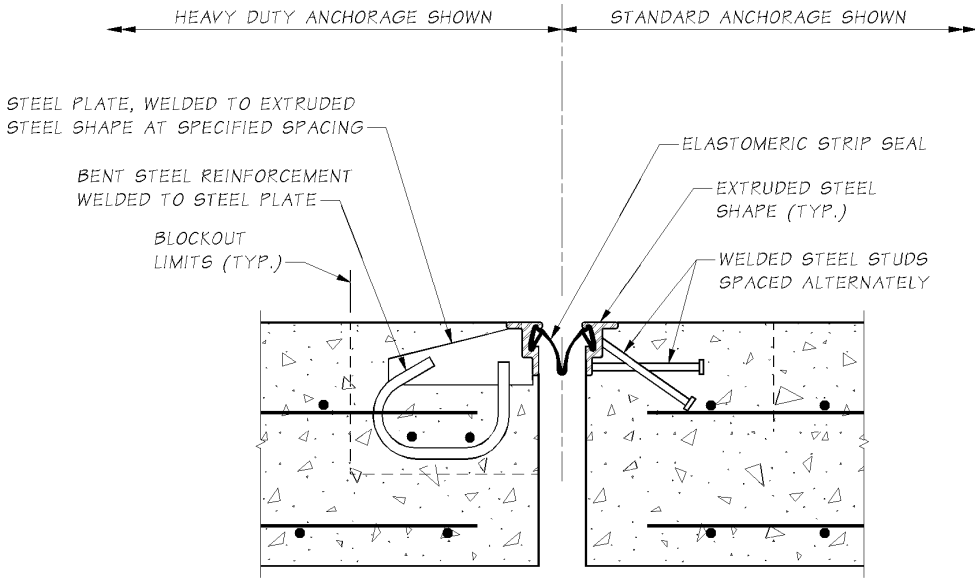

Preformed silicone strip seal systems are an alternative to conventional armored elastomeric strip seal systems. A preformed silicone strip seal comprises an inverted V-shaped, preformed, extruded silicone seal that is installed with a single component silicone locking adhesive and primer. Preformed silicone strip seals can be cut and bonded in the field to effect bends and upturns. Preformed silicone strip seals are being marketed for opening and closing movement ranges between 1½ inches and 5 inches. While steel plate armoring details have been developed for use with preformed silicone strip seals, this armoring is not considered as robust, under traffic, as conventionally armored strip seal joints, particularly when subjected to high traffic volumes and heavy truck loading. Preformed silicone strip seal expansion joints shall be used under traffic only in applications in which the expansion gap associated with the minimum factored design temperature does not exceed 4 inches. For use outside of this range, approval from the State Bridge Design Engineer is required.

9.1.4.C Bolt-down Panel Joints

Bolt-down panel joints, sometimes referred to as expansion dams, are preformed elastomeric panels internally reinforced with steel plates. Bridging across expansion gaps, these panels are bolted into formed blockouts in the concrete deck with either adhesive or expansive anchors. Expansion is accompanied by stress and strain across the width of the bolt-down panel between anchor bolts.

Figure 9.1.4-3 Bolt-down Panel Joint

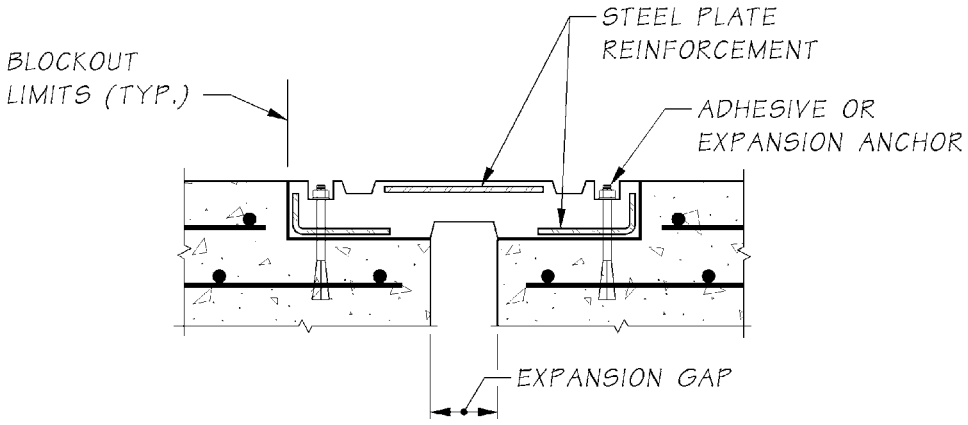

Because of durability concerns, we no longer specify bolt-down panel joints. On bridge overlay and expansion joint rehabilitation projects, bolt-down panels are being replaced with rapid-cure silicone sealant joints or strip seal joints. For rehabilitation of bridges having low speed or low volume traffic, existing bolt-down panel joints may be retained and/or selective damaged panels replaced.

9.1.5 Large Movement Range Joints

Steel finger and modular joints have all been used in the past for accommodating large movement ranges.

9.1.5.A Steel Finger Joints

Finger joints have been successfully used to accommodate medium and large movement ranges. They are generally fabricated from steel plate and are installed in cantilevered configurations. The steel fingers must be designed to support traffic loads with sufficient stiffness to preclude excessive vibration. In addition to longitudinal movement, finger joints must also accommodate any rotations or differential vertical deflection across the joint. Finger joints may be fabricated with a slight downward taper toward the ends of the fingers in order to minimize potential for snowplow blade damage. Unfortunately, finger joints do not provide an effective seal against water infiltration. Elastomeric and metal troughs have been installed beneath steel finger joints to catch and redirect runoff water. However, in the absence of routine maintenance, these troughs clog and become ineffective.

Figure 9.1.5-1 Steel Finger Joint

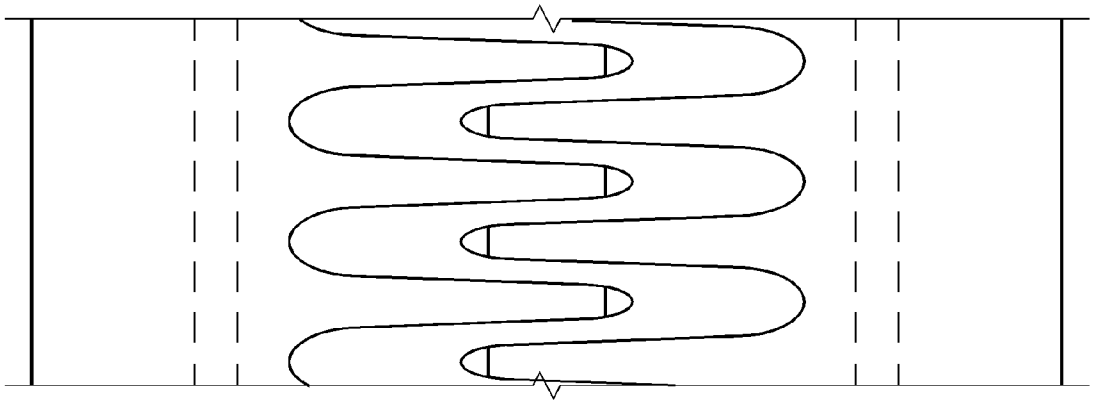

9.1.5.B Modular Expansion Joints

Modular expansion joints are complex structural assemblies designed to provide watertight wheel load transfer across expansion joint openings. These systems were developed in Europe and introduced into the U.S. in the 1960s. To date, modular expansion joints have been designed and fabricated to accommodate movements of up to 85 inches. In Washington State, the largest modular expansion joints are those on the newest Tacoma Narrows Bridge. These joints accommodate 48 inches of service movement and 60 inches of seismic movement. Modular expansion joints are generally shipped in a completely assembled configuration. Although center beam field splices are not preferable, smaller motion range modular expansion joints longer than 40 feet may be shipped in segments to accommodate construction staging and/or shipping constraints.

9.1.5.B.1 *Operational Characteristics*

Modular expansion joints comprise a series of steel center beams oriented parallel to the expansion joint axis. Elastomeric strip seals or box-type seals attach to adjacent center beams, preventing infiltration of water and debris. The center beams are supported on support bars, which span in the primary direction of anticipated movement. The support bars are supported on sliding bearings mounted within support boxes. Polytetrafluoroethylene (PTFE) – stainless steel interfaces between elastomeric support bearings and support bars facilitate the unimpeded translation of the support bars as the expansion gap opens and closes. The support boxes generally rest on either cast-in-place concrete or grout pads installed into a preformed blockout.

Modular expansion joints can be classified as either single support bar or multiple support bar systems. In multiple support bar systems, a separate support bar supports each center beam. In the more complex single support bar system, one support bar supports all center beams at each support location. This design concept requires that each center beam be free to translate along the longitudinal axis of the support bar as the expansion gap varies. This is accomplished by attaching steel yokes to the underside of the center beams. The yoke engages the support bar to facilitate load transfer. Precompressed elastomeric springs and PTFE – stainless steel interfaces between the underside of each center beam and the top of the support bar and between the bottom of the support bar and bottom of the yoke support each center beam and allow it to translate along the longitudinal axis of the support bar. Practical center beam span lengths limit the use of multiple support bar systems for larger movement range modular expansion joints. Multiple support bar systems typically become impractical for more than nine seals, which corresponds to movement ranges exceeding 27″. Hence, the single support bar concept typifies these larger movement range modular expansion joints.

Figure 9.1.5-2 Modular Expansion Joint

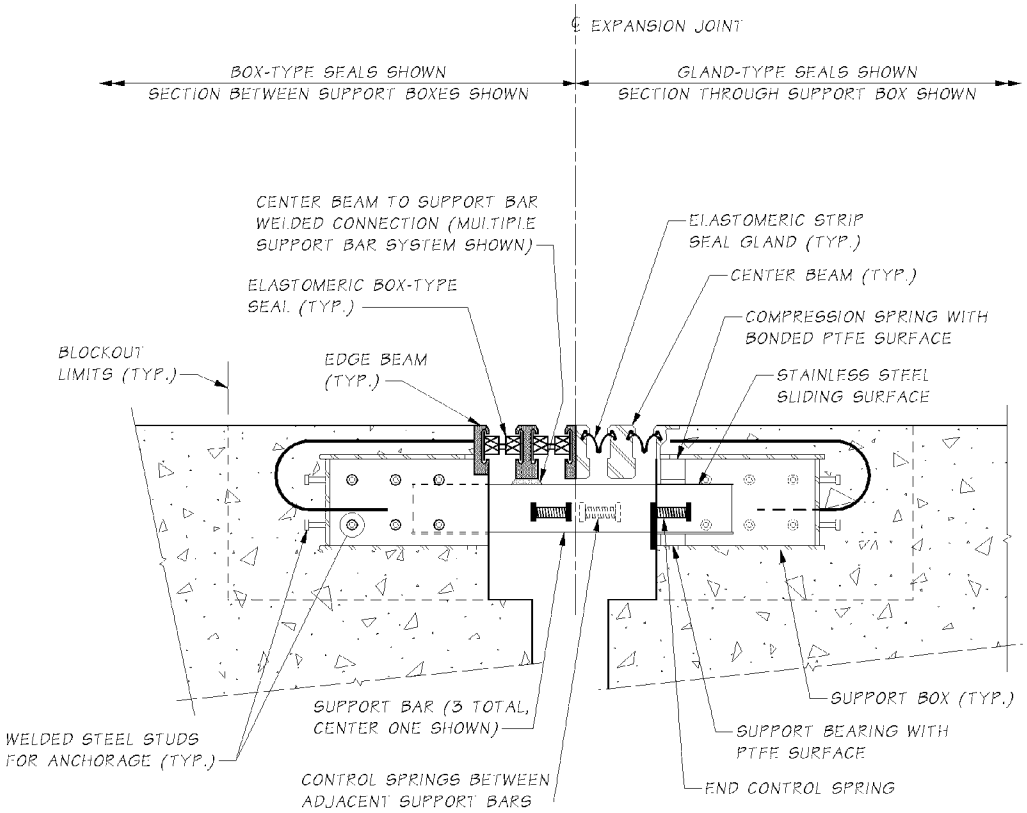

The highly repetitive nature of axle loads predisposes modular expansion joint components and connections to fatigue susceptibility, particularly at center beam to support bar connections and center beam field splices. Until recently, bolted connections of center beams to support bar have demonstrated poor fatigue endurance. Welded connections have been preferred, but must be carefully designed, fatigue tested, fabricated, and inspected to assure satisfactory fatigue resistance. WSDOT'S current General Special Provisions for modular expansion joints requires stringent fatigue-based design and test criteria for modular expansion joints. This special provision also specifies criteria for manufacturing, shipping, storing, and installing modular expansion joints.

Modular expansion joints may need to be shipped and/or installed in two or more pieces and subsequently spliced together in order to accommodate project staging and/or practical shipping limitations. Splicing generally occurs after concrete is cast into the blockouts. The center beams are the elements that must be connected. These field connections are either welded, bolted, or a hybrid combination of both.

Center beam field splices have historically been the weak link of modular expansion joints because of their high fatigue susceptibility and their tendency to initiate progressive zipper-type failure. The reduced level of quality control achievable with a field operation in regard to a shop operation contributes to this susceptibility. Specific recommendations regarding center beam field splices will be subsequently discussed as they relate to shop drawing review and construction.

9.1.5.B.2 *Movement Design*

Calculated total movement range establishes modular expansion joint size. WSDOT policy has been to provide a 15 percent factor of safety on these calculated service movements. Current systems permit approximately 3 inches of service load movement per elastomeric seal element; hence total service load movement rating provided will be a multiple of 3 inches.

Modular expansion joints must be fully serviceable and maintainable at their full range of factored design temperatures throughout their operational lifetimes. This includes the time before and after all long-term creep and shrinkage have occurred. To minimize impact and wear on bearing elements, the maximum gap between adjacent center beams under service load conditions should be limited to about 3½ inches.

Modular expansion joints are also subject to bridge movements associated with extreme events. Extreme event load combinations include earthquakes and, in the case of floating structures, extreme wind and wave loading. Because the fatigue limit state almost always controls centerbeam and support bar design, a larger movement capacity per cell is acceptable to accommodate extreme event movements provided that 1) support bars and boxes are detailed to accommodate the increased movement, and 2) detachment of elastomeric seals is acceptable. This is discussed further in Section 9.3 Seismic Isolation Bearings.

To facilitate the installation of the modular joints at temperatures other than the 64˚F normal temperature, the contract drawings shall specify expansion gap distance face-to-face of edge beams as a function of the superstructure temperature at the time of installation.

Modular expansion joint movement design relationships can be expressed as:

$$n = MR / mr$$
$$G_{min} = (n - 1) \cdot w + n \cdot g$$
$$G_{max} = G_{min} + MR$$

Where MR = total movement range of the modular joint

mr = movement range per elastomeric seal
n = number of seals
$n - 1$ = number of center beams
w = width of each center beam
g = minimum gap per strip seal element at full closure
G_{min} = minimum distance face-to-face of edge beams
G_{max} = maximum distance face-to-face of edge beams

9.1.5.B.3 *Review of Shop Drawings and Structural Design Calculations*

The manufacturer's engineer generally performs structural design of modular expansion joints. The project special provision requires that the manufacturer submit structural calculations, detailed fabrication drawings, and applicable fatigue tests for approval by the Engineer. All structural elements must be designed and detailed for both strength and fatigue. Additionally, modular expansion joints should be detailed to provide access for inspection and periodic maintenance activities, including replacement of seals, control springs, and bearing components.

WSDOT's General Special Provision for modular expansion joints delineates explicit requirements for their design, fabrication, and installation. This comprehensive special provision builds upon WSDOT's past experience specifying modular expansion joints and incorporates the NCHRP Report 402 *Fatigue Design of Modular Bridge Expansion Joints*. The special provisions include requirements for the shop drawings, calculations, material certifications, general fabrication methods, corrosion protection, shipping and handling, storage, installation, fatigue testing, applicable welding codes and certifications, quality control, and quality assurance. It is strongly advised to carefully review this special provision before reviewing modular expansion joint shop drawings and calculations.

Any structural details, including connections, that do not clearly correspond to specific fatigue categories depicted in the LRFD shall be fatigue tested in accordance with the requirements stipulated in the special provision. Documentation of these tests shall accompany the shop drawing submittal.

As stated in the special provisions, the Contractor shall submit documentation of a quality assurance program distinctly separate from in-house quality control. Quality assurance shall be performed by an independent agency and shall be provided by the manufacturer.

Weld procedures shall be submitted for all shop and field welds. These procedures stipulate welding process employed, end preparation of the component welded, weld metal type, preheat temperature, and welder certifications. It is critical that all welds be made in strict accordance with specifications and under very careful inspection.

Field splices of center beams require particularly careful review. WSDOT's special provision recommends several mitigating measures to minimize fatigue susceptibility of center beam field splices. These measures include reducing support box spacing and optimizing fatigue stress range at field splice locations. Keep in mind that the confined nature of the space in which a welder must work can make these welds very difficult to complete. The American Welding Society (AWS) Welding Code prequalifies certain end geometries because experience has shown that high quality welds can be achieved.

Non-prequalified center beam end geometries require the Contractor to submit a Procedure Qualification Record documenting that satisfactory weld quality has been achieved using samples before welding of the actual field piece. The Contractor will generally want to avoid the additional expense associated with these tests and will thus specify a prequalified end geometry.

WSDOT's special provisions require that adequate concrete consolidation be achieved underneath all support boxes. The reviewer should ascertain that the shop drawings detail a vertical minimum of 2 inches between the bottom of each support box and the top of the concrete blockout. Alternatively, when vertical clearance is minimal, grout pads can be cast underneath support boxes before casting the concrete within the blockout.

9.1.5.B.4 *Construction Considerations*

Temperature adjustment devices are temporarily welded to the modular expansion joints to permit the Contractor to adjust the modular joint width so that it is consistent with the superstructure temperature at the time concrete is placed in the blockout. The temperature devices effectively immobilize the modular joint. Once the concrete begins to set up, it is critical to remove these devices as soon as possible. If the modular expansion joint is prevented from opening and closing, it will be subject to very large, potentially damaging, forces.

Prior to placement of concrete into the blockout, temporary supports generally bridge across the expansion gap, suspending the modular expansion joint from the bridge deck surface. Following concrete placement, the modular joint is supported by bearing of the support boxes on concrete that has consolidated underneath the blockout. The inspector should assure that adequate concrete consolidation is achieved underneath and around the support boxes.

Following delivery of the modular expansion joint to the jobsite and prior to its installation, the inspector should ascertain that center beam end geometries at field weld splice locations match those shown on the approved weld procedure.

9.2 Bearings

9.2.1 General Considerations

Bridge bearings facilitate the transfer of vehicular and other environmentally imposed loads from the superstructure down to the substructure, and ultimately, to the ground. In fulfilling this function, bearings must accommodate anticipated movements (thermal expansion/contraction) while also restraining undesired movements (seismic displacements). Because the movements allowed by an adjacent expansion joint must be compatible with the movement restriction imposed by a bearing, bearings and expansion joints must be designed interdependently and in conjunction with the anticipated behavior of the overall structure.

Numerous types of bearings are used for bridges. These include steel reinforced elastomeric bearings, fabric pad sliding bearings, steel pin bearings, rocker bearings, roller bearings, pot bearings, spherical bearings, disk bearings, and seismic isolation bearings. Each of these bearings possesses different characteristics in regard to vertical and horizontal load carrying capacity, vertical stiffness, horizontal stiffness, and rotational stiffness. A thorough understanding of these characteristics is essential for economical bearing selection and design. Spherical bearings, disk bearings, and pot bearings are sometimes collectively referred to as high load multi-rotational (HLMR) bearings.

Seismic isolation bearings mitigate the potential for seismic damage by utilizing two related phenomena: dynamic isolation and energy dissipation. Dynamic isolation allows a superstructure to essentially float, to some extent, while substructure elements below move with the ground during an earthquake. The ability of some bearing materials and elements to deform in certain predicable ways allows them to dissipate seismic energy that might otherwise damage critical structural elements.

Given their unique, in many instances proprietary, nature and the need to holistically incorporate their design with the overall seismic analysis and design of the structure, a separate.

9.2.2 Force Considerations

Bridge bearings must be explicitly designed to transfer all anticipated loads from the superstructure to the substructure. These forces may be directed vertically, longitudinally, or transversely with respect to the global orientation of the bridge. In accordance with LRFD provisions, most bearing design calculations are based upon service limit state stresses. Impact need not be applied to live load forces in the design of bearings.

Experience has empirically led to the following practical load capacity approximations for various bearing types:

Bearing Type	Approx. Load Capacity
Steel reinforced elastomeric (Method B)	Less than 800 kips
Fabric pad	Less than 600 kips
Steel pin	More than 600 kips
Spherical and disk	More than 800 kips
Seismic isolation	Less than 800 kips

9.2.3 Movement Considerations

Bridge bearings can be detailed to provide translational fixity, to permit free translation in any horizontal direction, or to permit guided translation. The movement restrictions thus imposed by a bearing must be compatible with the movements allowed by an adjacent expansion joint. Additionally, both bearings and expansion joints must be designed consistent with the anticipated load and deformation behavior of the overall structure. Design rotations shall be calculated as follows:

9.2.3.A Elastomeric and Fabric Pad Bearings

The maximum service limit state rotation for bearings that do not have the potential to achieve hard contact between metal components shall be taken as the sum of unfactored dead and live load rotations plus an allowance for fabrication and construction uncertainties of 0.005 radians.

9.2.3.B HLMR Bearings

Both service and strength limit state rotations are used in the design of HLMR bearings. These rotations must be shown on the plans to allow the manufacturer to properly design and detail a bearing.

The service limit state rotation shown on the plans shall include an allowance for uncertainties of +/-0.005 radians.

The strength limit state rotation is used to assure that contact between hard metal or concrete surfaces is prevented under the full range of expected loading. In accordance with the LRFD-BDS, the strength limit state rotation shown on the plans shall include allowances of:

1. For disc bearings, +/-0.005 radians for uncertainties
2. For other HLMR bearings, such as spherical, pot, and steel pin bearings, +/-0.005 radians for fabrication and installation tolerances and an additional +/-0.005 radians for uncertainties

9.2.4 Detailing Considerations

HLMR bearings shall be designed, detailed, fabricated, and installed to facilitate inspection, maintenance, and eventual replacement. Jacking points shall be identified in the contract drawings so that bearings can be reset, repaired, or replaced. In some instances, bearings may need to be reset in order to mitigate unintended displacements induced by construction sequences.

Prestressed concrete girder bridges having end Type A (semi–integral) need not be detailed to accommodate elastomeric bearing replacement at abutments. Prestressed concrete girder bridges having end Type B (L-type abutments) shall be designed and detailed to accommodate elastomeric bearing replacement at abutments. Specifically, girder stops and end diaphragms shall be detailed to accommodate the placement of hydraulic jacks. The standard end diaphragms for long-span girders may not have sufficient flexural and shear capacity to support jacking induced stresses. The designer shall check these and provide sufficient steel reinforcement to accommodate shear forces and bending moments induced by jacking. (Girder end Types A and B are depicted on Figures 5.6.2-4 and 5.6.2-5.) Incidentally, intermediate piers of prestressed concrete girder bridges having steel reinforced elastomeric bearings shall also be designed and detailed to facilitate bearing replacement.

9.2.5 Bearing Types

9.2.5.A Elastomeric Bearings

Elastomeric bearings are perhaps the simplest and most economical of all bridge bearings. They are broadly classified into four types: plain elastomeric pads, fiberglass reinforced elastomeric pads, steel reinforced elastomeric pads, and cotton duck reinforced elastomeric pads. Of these four types, the latter two are used extensively for bridge construction. Incidentally, cotton duck reinforced elastomeric pads are generally referred to as fabric pad bearings. This subsection will address steel reinforced elastomeric bearings. A subsequent section will address fabric pad bearings.

A steel reinforced elastomeric bearing consists of discrete steel shims vulcanized between adjacent discrete layers of elastomer. The vulcanization process occurs in an autoclave under conditions of high temperature and pressure. The constituent elastomer is either natural rubber or synthetic rubber (neoprene). Steel reinforced elastomeric bearings are commonly used with prestressed concrete girder bridges and may be used with other bridge types. Because of their relative simplicity and fabrication ease, steel reinforced elastomeric bearings offer significant economy relative to HLMR bearings.

Steel reinforced elastomeric bearings rely upon the inherent shear flexibility of the elastomer layers to accommodate bridge movements in any horizontal direction. This shear flexibility also enhances their rotational flexibility. The steel shims limit the tendency for the elastomer layers to bulge laterally under compressive load.

Steel reinforced elastomeric bearings can be designed by either the Method A or Method B procedure delineated in the LRFD provisions. Current WSDOT policy is to design all elastomeric bearings using the Method B provisions, which provides more relief in meeting rotational demands than Method A. The Method A design procedure is a carryover based upon more conservative interpretation of past theoretical analyses and empirical observations prior to research leading up to the publication of NCHRP Report 596 *Rotation Limits for Elastomeric Bearings*.

Both Method A and Method B design procedures require determination of the optimal geometric parameters to achieve an appropriate balance of compressive, shear, and rotational stiffnesses and capacities. Fatigue susceptibility is controlled by limiting live load compressive stress. Delamination (of steel shim-elastomer interface) susceptibility is controlled by limiting total compressive stress. Assuring adequate shim thickness precludes yield and rupture of the steel shims. Excessive shear deformation is controlled and rotational flexibility is assured by providing adequate total elastomer height. Generally, total elastomer thickness shall be no less than twice the maximum anticipated lateral deformation. Overall bearing stability is controlled by limiting total bearing height relative to its plan dimensions. The most important design parameter for reinforced elastomeric bearings is the shape factor. The shape factor is defined as the plan area of the bearing divided by the area of the perimeter free to bulge (perimeter multiplied by thickness of one layer of elastomer).

Axial, rotational, and shear loading generate shear strain in the constituent elastomeric layers of a typical bearing. Computationally, Method B imposes a limit on the sum of these shear strains. It distinguishes between static and cyclic components of shear strain by applying an amplification factor of 1.75 to cyclic components to reflect cumulative degradation caused by repetitive loading.

In essence, elastomeric bearing design reduces to checking several mathematical equations while varying bearing plan dimensions, number of elastomeric layers and their corresponding thicknesses, and steel shim thicknesses. Because these calculations can become rather tedious, MS Excel spreadsheets have been developed and are available for designs using both Method A and Method B procedures. See the Bearing and Expansion Joint Specialist for these design tools.

LRFD design may result in thicker steel reinforced elastomeric bearings than previous designs, particularly for shorter span bridges. This is a consequence of the increased rotational flexibility required to accommodate the 0.005 radian allowance for uncertainties and partially to inherent conservatism built into the rotational capacity equations.

Although constituent elastomer has historically been specified by durometer hardness, shear modulus is the most important physical property of the elastomer for purposes of bearing design. Research has concluded that shear modulus may vary significantly among compounds of the same hardness. Accordingly, shear modulus shall be specified on the plans as 165 psi at 73°F without reference to durometer hardness.

Elastomeric bearings shall conform to the requirements of AASHTO Specification M 251 *Plain and Laminated Elastomeric Bridge Bearings*. Shims shall be fabricated from ASTM A 1011 Grade 36 steel unless noted otherwise on the plans. Bearings shall be laminated in ½ inch thick elastomeric layers with a minimum total thickness of 1 inch. For overall bearing heights less than 5 inches, a minimum of ¼ inch of side clearance shall be provided over the steel shims. For overall heights greater than 5 inches, a minimum of ½ inch of side clearance shall be provided. Live load compressive deflection shall be limited to 1/16 inch. AASHTO Specification M 251 requires elastomeric bearings to be subjected to a series of tests, including a compression test at 150 percent of the total service load. For this reason, compressive dead load and live load shall be specified on the plans.

With respect to width, elastomeric bearings shall be designed and detailed as follows:

1. For prestressed concrete wide flange girders (WF42G, WF50G, WF58G, WF74G, and W95G), the edge of the bearing pad shall be set between 1 inch minimum and 9 inch maximum inside of the edge of the girder bottom flange.
2. For prestressed concrete I-girders, bulb-tee girders, and deck bulb-tee girders, the edge of the bearing pad shall be set 1 in. in side of the edge of the girder bottom flange.
3. For all prestressed concrete tub girders, the edge of the bearing shall be set 1in. inside of the edge of the bottom slab. Bearing pads for prestressed concrete tub girders shall be centered close to the centerline of each web.
4. For all prestressed concrete slabs, one bearing pad and corresponding grout pad is required for each end of the prestressed concrete slab. The centerline of the bearing and grout pad shall coincide with the centerline of the prestressed concrete slab. The need for steel shims shall be assessed during the bearing design.

As mentioned earlier, LRFD-BDS Article 14.4.2.1 requires that a 0.005 radian allowance for uncertainties be included in the design of steel reinforced elastomeric bearings. This allowance applies to both rotations θx and θy. The LRFD-BDS Article 14.4.2 Commentary states "An owner may reduce the fabrication and setting tolerance allowances if justified by a suitable quality control plan; therefore, these tolerance limits are stated as

recommendations rather than absolute limits." Consult with the Bearings and Expansion Joint Specialist in instances in which the 0.005 radian tolerance precludes convergence to a reasonable design solution.

In order to facilitate compressive load testing, future bearing replacement, and vertical geometry coordination, the following table shall be included in the Plans:

Bearing Design Table Service I Limit State	
Dead load reaction	--------- kips
Live load reaction (w/o impact)	--------- kips
Unloaded height	--------- inches
Loaded height (*DL*)	--------- inches
Shear modulus at 73° F	--------- psi

In the construction of precast prestressed concrete girder and steel girder bridges, elastomeric bearings are generally not offset to account for temperature during erection of the girders as are most other bearing systems. Girders may be set atop elastomeric bearings at temperatures other than the mean of the temperature range. This is statistically reconciled by assuming a maximum thermal movement in either direction of:

$$\Delta_{temp} = 0.75 \cdot \alpha \cdot L \cdot (T_{MaxDesign} - T_{MinDesign})$$

where $T_{MaxDesign}$ is the maximum anticipated superstructure average temperature and $T_{MinDesign}$ is the minimum anticipated superstructure average temperature during the life of the bridge.

For precast prestressed concrete girder bridges, the maximum thermal movement, Δ_{temp}, shall be added to shrinkage and long-term creep movements to determine total bearing height required. The shrinkage movement for this bridge type shall be half that calculated for a cast-in-place concrete bridge, as noted in Section 9.1.2-A.

For cast-in-place concrete bridges, it is assumed that the temperature of concrete at placement is equal to the normal temperature, as defined by the *Standard Specifications*. Total shrinkage movement, calculated as noted in Section 9.1.2-A, is added to the maximum thermal movement, Δ_{temp}, to determine required total height of the elastomeric bearing.

9.2.5.B Fabric Pad Sliding Bearings

Fabric pad sliding bearings incorporate fabric pads with a polytetrafluoroethylene (PTFE)–stainless steel sliding interface to permit large translational movements. Unlike a steel reinforced elastomeric bearing having substantial shear flexibility, the fabric pad alone cannot accommodate translational movements. Fabric pads can accommodate very small amounts of rotational movement; less than can be accommodated by more flexible steel reinforced elastomeric bearings. Practical size considerations limit the use of fabric pad bearings to total service load reactions under about 600 kips.

PTFE, also referred to as Teflon, is available in several forms: unfilled sheet, dimpled lubricated, filled, and woven. Filled PTFE contains glass, carbon, or other chemically inert fibers that enhance its resistance to creep (cold flow) and wear. Interweaving high strength fibers through PTFE material creates woven PTFE. Dimpled PTFE contains dimples, which act as reservoirs for silicone grease lubricant.

Friction coefficients for PTFE – stainless steel surfaces vary significantly as a function of PTFE type, contact pressure, and ambient temperature. The LRFD-BDS provides friction coefficients as a function of these variables. Dimpled lubricated PTFE at high temperatures and high contact pressures typically yield the lowest friction coefficients. Filled PTFE at low temperatures and low contact pressures yield the highest friction coefficients.

In order to minimize frictional resistance, a Number 8 (Mirror) finish should be specified for all flat stainless steel surfaces in contact with PTFE. The low-friction characteristics of a PTFE – stainless steel interface are actually facilitated by fragmentary PTFE sliding against PTFE after the fragmentary PTFE particles are absorbed into the asperities of the stainless steel surface.

In fabric pad sliding bearings, the PTFE is generally recessed half its depth into a steel backing plate, which is generally bonded to the top of a fabric pad. The recess provides confinement that minimizes creep (cold flow). The stainless steel sheet is typically seal welded to a steel sole plate attached to the superstructure.

Silicone grease is not recommended for non-dimpled PTFE. Any grease will squeeze out under high pressure and attract potentially detrimental dust and other debris.

9.2.5.B.1 *Fabric Pad Design*

WSDOT's design criteria for fabric pad bearings are based upon manufacturers' recommendations, supported by years of satisfactory performance. These criteria differ from LRFD-BDS provisions in that they recognize significantly more rotational flexibility in the fabric pad. Our maximum allowable service load average bearing pressure for fabric pad bearing design is 1,200 psi. WSDOT's maximum allowable service load edge bearing pressure for fabric pad bearing design is 2,000 psi. A 1,200 psi compressive stress corresponds to 10 percent strain in the fabric pad while a 2,000 psi compressive stress corresponds to 14 percent compressive strain. Based upon this information, the following design relationship can be established:

$$\theta = \frac{2 \times (.14 - .10) \times T}{L}$$

$$\theta = \frac{.08 \times T}{L}$$

$$T = 12.5 \times \theta \times L$$

Where

θ = rotation due to loading plus construction tolerances
L = pad length (parallel to longitudinal axis of beam)
T = fabric pad thickness required

9.2.5.B.2 *PTFE*

Stainless Steel Sliding Surface Design – PTFE having a maximum dimension less than or equal to 24 inches shall be 3⁄16 inch thick and shall be recessed 3⁄32 inch into a ½ inch thick steel plate that is bonded to the top of the fabric pad. PTFE having a maximum dimension greater than 24 inches. shall be ¼ inch thick and shall be recessed ⅛ inch into a ½-inch thick steel plate that is bonded to the top of the fabric pad. With the PTFE confined in this recess, the LRFD-BDS code permits an average contact stress of 4,500 psi for all loads calculated at the service limit state and an average contact stress of 3,000 psi for permanent loads calculated at the service limit state. The LRFD-BDS code permits slightly higher edge contact stresses.

For example, suppose:

DL = 150 kips

LL = 90 kips

A_{PTFE} > (150 kips + 90 kips)/4.5 ksi = 53.3 in^2

A_{PTFE} > 150 kips/3 ksi = 50.0 in^2

Selected area of PTFE must exceed 53.3 in^2

Stainless steel sheet shall be finished to a No. 8 (Mirror) finish and seal welded to the sole plate.

9.2.5.C Pin Bearings

Steel pin bearings are generally used to support heavy reactions with moderate to high levels of rotation about a single predetermined axis. This situation generally occurs with long straight steel plate girder superstructures.

9.2.5.D Rocker and Roller Type Bearings

Steel rocker bearings have been used extensively in the past to allow both rotation and longitudinal movement while supporting large loads. Because of their seismic vulnerability and the more extensive use of steel reinforced elastomeric bearings, rocker bearings are no longer specified for new bridges.

Steel roller bearings have also been used extensively in the past. Roller bearings permit both rotation and longitudinal movement. Pintles are generally used to connect the roller bearing to the superstructure above and to the bearing plate below. Nested roller bearings have also been used in the past. Having been supplanted by more economical steel reinforced elastomeric bearings, roller bearings are infrequently used for new bridges today.

9.2.5.E Spherical Bearings

A spherical bearing relies upon the low-friction characteristics of a curved PTFE–stainless steel interface to provide a high level of rotational flexibility in multiple directions. An additional flat PTFE–stainless steel surface can be incorporated into the bearing to additionally provide either guided or non-guided translational movement capability.

Woven PTFE is generally used on the curved surfaces of spherical bearings. Woven PTFE exhibits enhanced creep (cold flow) resistance and durability characteristics relative to unwoven PTFE. When spherical bearings are detailed to accommodate translational movement, woven PTFE is generally specified on the flat sliding surface also. The LRFD code permits an average contact stress of 4,500 psi for all loads calculated at the service limit state and an average contact stress of 3,000 psi for permanent loads calculated at the service limit state. The LRFD-BDS code permits slightly higher edge contact stresses.

Both stainless steel sheet and solid stainless steel have been used for the convex sliding surface of spherical bearings. According to one manufacturer, curved sheet is generally acceptable for contact surface radii greater than 14 in to 18 in For smaller radii, a solid stainless steel convex plate or a stainless steel inlay is used. The inlay is welded to the solid conventional steel. If the total height of the convex plate exceeds about 5 in, a stainless steel inlay will likely be more economical.

Most spherical bearings are fabricated with the concave surface oriented downward to minimize dirt infiltration between PTFE and the stainless steel surface. Structural analysis of the overall structure must recognize the center of rotation of the bearing not being coincident with the neutral axis of the girder above.

The contract drawings must show the diameter and height of the spherical bearing in addition to all dead, live, and seismic loadings. Total height depends upon the radius of the curved surface, diameter of the bearing, and total rotational capacity required. Consult the Bearing and Expansion Joint Specialist for design calculation examples. Additionally, sole plate connections, base plate, anchor bolts, and any appurtenances for horizontal force transfer must be detailed on the plans. The spherical bearing manufacturer is required to submit shop drawings and detailed structural design calculations of spherical bearing components for review by the Engineer.

9.2.5.F Disk Bearings

A disk bearing is composed of an annular shaped polyether urethane disk designed to provide moderate levels of rotational flexibility. A steel shear-resisting pin in the center provides resistance against lateral force. A flat PTFE–stainless steel surface can be incorporated into the bearing to also provide translational movement capability, either guided or non-guided.

9.2.6 Miscellaneous Details

9.2.6.A Temporary Support before Grouting Masonry Plate

The masonry plate of a HLMR bearing is generally supported on a grout pad that is installed after the bearing and superstructure girders above have been erected. This procedure allows the Contractor to level and slightly adjust the horizontal location of the bearing before immobilizing it by placing the grout pad. Several methods have been developed to temporarily support the masonry plate until the grout is placed. The two most commonly used methods will be discussed here.

9.2.6.A.1 *Shim Packs*

Multiple stacks of steel shim plates can be placed atop the concrete surface to temporarily support the weight of the girders on their bearings before grouting. Engineering judgment must be used in selecting the number and plan size of the shims taking grout flowability and shim height adjustability into consideration.

9.2.6.A.2 *Two-step Grouting with Cast Sleeves*

A two-step grouting procedure with cast-in-place voided cores can be used for smaller HLMRs not generally subjected to uplift. Steel studs are welded to the underside of the masonry plate to coincide with the voided cores. With temporary shims installed between the top of the concrete surface and the underside of the masonry plate, the voided cores are fully grouted. Once the first stage grout has attained strength, the shims are removed, the masonry plate is dammed, and grout is placed between the top of the concrete surface and the underside of the masonry plate.

9.2.6.B Anchor Bolts

Anchor bolts shall be designed to resist all horizontal shear forces and direct tension force due to uplift.

Anchor bolts shall be ASTM A 449 where strengths equal to ASTM A 325 are required and ASTM A 354, Grade BD, where strengths equal to ASTM A 490 are required. ASTM F 1554 bolts with supplemental Charpy test requirements shall be specified in applications in which the bolts are subject to seismic loading.

9.2.7 Contract Drawing Representation

High load multi-rotational bearings are generally depicted schematically in the contract drawings. Each bearing manufacturer has unique fabricating methods and procedures that allow it to fabricate a bearing most economically. Depicting the bearings schematically with loads and geometric requirements provides each manufacturer the flexibility to innovatively achieve optimal economy.

9.2.8 Shop Drawing Review

The manufacturer designs and develops shop drawings for high load multi-rotational bearings. The Engineer is responsible for checking and approving the calculations and shop drawings. The calculations shall verify the structural adequacy of all components of the bearing. Each bearing shall be detailed to permit the inspection and replacement of components.

9.2.9 Bearing Replacement Considerations

In some situations, existing bearings, or elements thereof, must be replaced consequent to excessive wear or seismic rehabilitation. Bearing replacement operations generally require lifting of superstructure elements using hydraulic jacks. The designer is responsible for calculating anticipated lifting loads and stipulating these loads on the contract drawings. Limitations on lift height shall also be specified. Consideration shall be given to lift height as it relates to adjacent expansion joints elements and adjoining sections of railing. Stresses induced as a consequence of differential lift height between multiple hydraulic jacks are generally addressed by stipulating restrictions in the plans or special provisions.

Past experience shows that actual lifting loads nearly always exceed calculated lifting loads. Many factors may contribute to this phenomenon, including friction in the hydraulic jack system and underestimation of superstructure dead loads. Unless the Bearing and Expansion Joint Specialist or the State Bridge Design Engineer approves a variance, contract documents shall require that all hydraulic jacks be sized for 200 percent of the calculated lifting load. In all cases, the designer shall verify from manufacturer's literature that appropriate hydraulic jacks are available to operate within the space limitations imposed by a particular design situation.

9.3 Seismic Isolation Bearings

9.3.1 General Considerations

Numerous seismic isolation bearings exist, each relying upon varying combinations of dynamic isolation and energy dissipation. These devices include lead core elastomeric bearings, high damping rubber, friction pendulum, hydraulic dampers, and various hybrid variations.

Effective seismic isolation bearing design requires a thorough understanding of the dynamic characteristics of the overall structure as well as the candidate isolation devices. Isolation devices are differentiated by maximum compressive load capacity, lateral stiffness, lateral displacement range, maximum lateral load capacity, energy dissipation per cycle, functionality in extreme environments, resistance to aging, fatigue and wear properties, and effects of size.

The Highway Innovative Technology Evaluation Center (HITEC) has developed guidelines for testing seismic isolation and energy dissipating devices. With the goal of disseminating objective information to design professionals, HITEC has tested and published technical reports on numerous proprietary devices. These tests include performance benchmarks, compressive load dependent characterization, frequency dependent characterization, fatigue and wear, environmental aging, dynamic performance at extreme temperatures, durability, and ultimate performance.

9.3.2 Suitability and Selection Considerations

The decision to use seismic isolation bearings should be made during the early stages of project development based upon complexity of the geotechnical issues and bridge structural design. A cost-benefit analysis comparing Type 1 (ductile substructure) design vs. Type 3 (seismic isolation) design shall be performed and submitted for approval to the State Bridge Design Engineer. The designer shall perform two separate designs, one with and one without seismic isolation bearings. The cost-benefit analysis shall, as minimum, address the following:

- Longer initial design time and increased analysis complexity
- Impact of preliminary and final design time on the project delivery schedule
- Time required for feasibility assessment of seismic isolation and consultation with prospective isolation bearing suppliers
- Life cycle cost associated with additional specialized bearing inspections
- Life cycle cost associated with potential bearing and expansion joint replacements
- Long-term performance and maintenance issues
- Necessity for larger movement range expansion joints to accommodate isolation effects

Seismic isolation bearings shall not be used between top of column and bottom of crossbeam in either single or multiple column bents.

Following approval, by the State Bridge Design Engineer, to use seismic isolation bearings, the designer shall send a set of preliminary plans and mitigation requirements to at least three seismic isolation bearing suppliers for evaluation to determine if they can meet the design and specification requirements. Inspection and maintenance requirements shall be solicited from the suppliers to ascertain that their bearings will function satisfactorily throughout the design life of the bridge, including after any seismic events. Comments

from suppliers shall be considered and appropriately assimilated before commencing final structural design. Sole source procurement may be considered and pursued upon approval by the State Bridge Design Office and the Project Engineer.

Seismic isolation bearings may not provide significant benefit for concrete bridges under 700 foot length, steel bridges under 800 foot length, bridges having skew in excess of 30 degrees, or bridges with geometrical complexities, variable superstructure width, or drop-in spans. As such, seismic isolation bearings are not recommended for bridges having these characteristics.

The suitability of seismic isolation bearings for a specific project should be carefully evaluated prior to approval. Seismic isolation bearings may not be an effective solution for some combinations of bridge types and site conditions. For example, increasing the fundamental period of a structure founded on soft soils may not reduce the force demand. Design shall include near fault effects and soil-structure interaction associated with soft soil sites.

Expansion joints must accommodate seismic movements in order for seismic isolation bearings to function properly. The effect of this increased movement upon expansion joint demands shall be carefully considered. Modular expansion joints are generally designed to accommodate longitudinal service movement only. Design of modular expansion joints to accommodate longitudinal service movement is generally based upon limiting the movement capacity per elastomeric seal to 3 inches maximum in order to limit the fraction of wheel load imposed upon any one centerbeam and to assure that elastomeric seals will not detach under service load conditions. Because the fatigue limit state almost always controls centerbeam and support bar design, a larger movement capacity per cell is acceptable to accommodate seismic movement provided that 1) support bars and boxes are detailed to accommodate the increased movement and 2) elastomeric seal detachment is acceptable. Standard modular expansion joints are not designed to accommodate transverse bridge movements. Seismic modular expansion joints must be used if transverse movement must also be accommodated.

9.3.3 General Design Criteria

Seismic isolation bearings shall be designed in accordance with the requirements of the AASHTO *Guide Specifications for Seismic Isolation Design*. The response modification factors (R-factors) contained in Article 6 shall not be used if the provisions of the LRFD SEISMIC are being followed for the design of the bridge.

9.3.4 Seismic Isolation Bearing Submittal Requirements

The selected manufacturer shall develop and submit seismic isolation bearing design calculations and shop drawings to WSDOT for review and approval. Design calculations and shop drawings shall be based upon the loads, movement demands, schematic details, and engineering requirements contained in the contract drawings and Special Provisions. All suppliers are required to provide calculations and shop drawings regardless of the contracting method or whether sole source procurement has been approved. The use of seismic isolation bearings for WSDOT projects shall fully comply with the requirements herein. A manufacturer's design report will not be accepted in lieu of complying with the following five requirements:

9.3.4.A Shop Drawings

Fully engineered shop drawings shall be submitted to document compliance with contractual material and design requirements and to provide a baseline reference for future engineering evaluation during the design life of the bridge. Shop drawings shall clearly show all individual components, constituent materials, connections, dimensions, surface finishes, coatings, and tolerances necessary to fabricate components and fully assemble the bearing. Shop drawings do not need to identify proprietary aspects of individual components or fabrication procedures (for example, low-friction sliding material and its attachment to steel components).

9.3.4.B Bearing Materials and Fabrication

Stainless steel shall be incorporated as specified on all sliding or articulating surfaces. Bearings with seals shall be watertight systems. Mill certification documentation shall be submitted for all constituent components. Quality Assurance (QA) inspection affords WSDOT the opportunity to verify and document materials, witness modular fabrication and coating processes, and verify "Buy America" material requirements. Modular methods of bearing manufacturing shall accommodate the full WSDOT QA process.

9.3.4.C Paint

All non-stainless steel surfaces shall have a full four-coat (primer, intermediate, intermediate stripe, and top coat) paint system applied in accordance with *Standard Specifications* and Special Provisions. The full four-coat paint system shall be applied to all non-stainless steel and non-plastic internal and external surfaces.

9.3.4.D Bearing Specifications

WSDOT bearing specifications constitute part of the contract. Disregard of or noncompliance with the bearing specification requirements in the Special Provisions constitutes a violation of the contract.

9.3.4.E Fabrication

Third-party inspection shall be provided by the manufacturer. The manufacturer shall provide access for Contracting Agency QA inspection as stipulated in *Standard Specifications* Section 1.5.6 and the bearing Special Provisions. QA inspection shall include all aspects of the bearing fabrication and assembly. The manufacturer shall adhere to all hold points, as specified in the *Standard Specifications* and Special Provisions.

9.3.5 Seismic Isolation Bearing Review Process

The manufacturer shall submit design calculations and shop drawings to the Engineer for review and approval prior to commencement of fabrication operations. The Engineer shall review the contract drawings and Special Provisions to assure familiarity with the design, fabrication, and inspection requirements.

9.3.5.A Design Calculations

The Engineer shall review the design calculations to assure that

- All design calculations are stamped and signed.
- The design incorporates all load cases specified in the contract documents.
- The design incorporates all displacements and rotations specified in the contract documents.
- All allowable stresses used in the design are consistent with LRFD provisions and that these allowable stresses are not exceeded.

9.3.5.B Shop Drawings

The Engineer shall review the shop drawings to assure that

- All shop drawings are stamped and signed.
- Shop drawings include plan and elevation view of the assembled bearings and details of each constituent component. Such details shall include all dimensions and tolerances necessary to complete manufacturing.
- All component materials shall be specified on the shop drawings and shall conform with the requirements of the Special Provisions.
- All component flatness tolerances and surface roughness requirements are depicted on the shop drawings and are consistent with the Special Provisions.
- All corrosion protection system details (galvanization, paint) for steel components, bolts, and washers are designated on the shop drawings and are in conformance with the Special Provisions and the *Standard Specifications*.
- Bearings have been designed and detailed to accommodate full inspection and removal and replacement of all components subject to wear or other anticipated damage.
- Adequate clearances, including applicable tolerances, have been provided between components in order to accommodate assembly and service movements.
- Positive connections are provided between all components to assure individual components will not separate under unanticipated seismic movements. All connections have been designed to accommodate loads shown on the contract drawings.
- Shop drawings stipulate handling and storage requirements for both shipment and jobsite storage.
- Masonry and sole plate connections are integrated into the bearing design.
- Specific directives are provided for setting the bearings as a function of the bridge temperature. These directives shall include a rational method for assessing the temperature of the superstructure.
- Grouting procedure and temporary shim requirements underneath the masonry plate are clearly depicted on the shop drawings.
- Shop drawings stipulate that all bearings shall be marked for location and orientation as required by the Special Provisions

9.3.6 Seismic Isolation Bearing Inspection

9.3.6.A Fabrication Inspection

The manufacturer shall provide access for third-party QA inspectors to observe the fabrication and testing of the seismic isolation bearings in accordance with WSDOT *Standard Specifications* Section 1-05.6.

9.3.6.B Field Inspection

Following arrival at the jobsite, prior, during, and after installation, WSDOT inspectors shall perform the following inspections

- Inspect all external surfaces for paint distress or presence of corrosion.
- Inspect perimeter seals for damage that could compromise watertightness.
- Inspect grout, concrete, and other structural elements connected to the bearings for damage.
- Verify that adequate lateral and vertical clearances exist around the bearing to assure that lateral and vertical displacement capacities can be achieved. Confirm that no structural components obstruct the bearing from achieving these movement capacities. Evaluate any non-structural obstructions that could impede attainment of movement capacities.
- Inspect the perimeter of the isolated structure to ascertain that it is free to move as needed to attain the horizontal and vertical displacement capacities of the bearings.

9.4 Bridge Standard Drawings

9.4.1 Expansion Joints

9.1-A1-1 Compression Seal (PDF 131KB)(DWG 132KB)

9.1-A2-1 Expansion Joint Details Strip Seal (PDF 169KB) (DWG 199KB)

9.1-A3-1 Silicone Seal (PDF 107KB)(DWG 104KB)

Chapter 10
Signs, Barriers, Approach Slabs, and Utilities Contents

10.1 Sign and Luminaire Supports 10-1
10.1.1 Loads 10-1
10.1.1.A General 10-1
10.1.1.B Dead Loads 10-1
10.1.1.C Live Load 10-1
10.1.1.D Wind Loads 10-1
10.1.1.E Fatigue Design 10-2
10.1.1.F Ice and Snow Loads 10-2
10.1.1.G Group Load Combinations 10-2
10.1.1.H Impact Loads 10-3
10.1.2 Bridge Mounted Signs 10-3
10.1.2.A Vertical Clearance 10-3
10.1.2.B Geometrics 10-4
10.1.2.C Aesthetics 10-5
10.1.2.D Sign Placement 10-5
10.1.2.E Installation 10-6
10.1.2.F Installing/Replacing New Sign on Existing Bracket Supports 10-6
10.1.2.G Detailing 10-7
10.1.3 Monotube Sign Structures Mounted on Bridges 10-7
10.1.3.A Design Loads 10-7
10.1.3.B Vertical Clearance 10-7
10.1.3.C Geometrics 10-7
10.1.4 Monotube Sign Structures 10-8
10.1.4.A Sign Bridge Conventional Design 10-8
10.1.4.B Cantilever Conventional Design 10-8
10.1.4.C Balanced Cantilever Conventional Design 10-10
10.1.4.D VMS Installation 10-10
10.1.4.E Monotube Sheet Guidelines 10-11
10.1.4.F Monotube Quantities 10-11
10.1.5 Foundations 10-11
10.1.5.A Monotube Sign Structure Foundation Types 10-11
10.1.5.B Luminaire, Signal Standard, and Camera Pole Foundation Types . . 10-12
10.1.5.C Foundation Design 10-12
10.1.5.C.1 Monotube Sign Structures Foundation Type 1 Design 10-13
10.1.5.C.2 Monotube Sign Structures Foundation Type 2 and 3 10-13
10.1.5.C.3 Monotube Sign Structures Non-Conventional Design Foundations 10-13
10.1.5.C.4 Signal Foundation Design 10-13
10.1.5.D Foundation Quantities 10-14

10.2 Bridge Traffic Barriers . . . 10-15
10.2.1 General Guidelines . . . 10-15
10.2.2 Bridge Railing Test Levels . . . 10-16
10.2.3 Available WSDOT Designs . . . 10-16
10.2.3.A Service Level 1 (SL-1) Weak Post Guardrail (TL-2) . . . 10-16
10.2.3.B Texas T-411 Aesthetic Concrete Baluster (TL-2) . . . 10-17
10.2.3.C Traffic Barrier – 32″ F-Shape (TL-3) . . . 10-17
10.2.3.D Traffic Barrier – 34″ Single Slope (TL-3) . . . 10-18
10.2.3.E Oregon 3-Tube Curb Mounted Traffic Barrier (TL-4) . . . 10-19
10.2.3.F Traffic Barrier – 42″ F-Shape (TL-4 and TL-5) . . . 10-19
10.2.3.G Traffic Barrier – 42″ Single Slope (TL-4 and TL-5) . . . 10-20
10.2.4 Design Criteria . . . 10-20
10.2.4.A Design Values . . . 10-20
10.2.4.B Geometry . . . 10-21
10.2.4.C Standard Detail Sheet Modifications . . . 10-21
10.2.4.D Miscellaneous Design Information . . . 10-22

10.3 At Grade Concrete Barriers . . . 10-24
10.3.1 Differential Grade Concrete Barriers . . . 10-24
10.3.1.A Differential Grade Concrete Barriers . . . 10-24
10.3.2 Traffic Barrier Moment Slab . . . 10-25
10.3.2.A General . . . 10-25
10.3.2.B Guidelines for Moment Slab Design . . . 10-26
10.3.2.B.1 Structural Capacity . . . 10-26
10.3.2.B.2 Global Stability . . . 10-26
10.3.2.B.3 Minimum and Maximum Dimensions . . . 10-27
10.3.2.B.4 Sliding of the Barrier . . . 10-27
10.3.2.B.5 Overturning of the Barrier . . . 10-28
10.3.2.C Guidelines for the Soil Reinforcement . . . 10-28
10.3.2.D Design of the Wall Panel . . . 10-28
10.3.3 Precast Concrete Barrier . . . 10-29
10.3.3.A Concrete Barrier Type F and Type 2 . . . 10-29
10.3.3.B Concrete Barrier Type F Narrow Base and Concrete Barrier Type 4 10-29

10.4 Bridge Traffic Barrier Rehabilitation . . . 10-30
10.4.1 Policy . . . 10-30
10.4.2 Guidelines . . . 10-30
10.4.3 Design Criteria . . . 10-30
10.4.4 WSDOT Bridge Inventory of Bridge Rails . . . 10-31
10.4.5 Available Retrofit Designs . . . 10-32
10.4.5.A Washington Thrie Beam Retrofit of Concrete Balusters . . . 10-32
10.4.5.B Delaware Thrie Beam Guardrail . . . 10-32
10.4.5.C Concrete Parapet Retrofit . . . 10-32
10.4.5.D SL-1 Weak Post . . . 10-32

10.4.6 Available Replacement Designs . . . 10-32
10.4.6.A Traffic Barrier – Shape F Retrofit . . . 10-32
10.5 Bridge Railing . . . 10-33
10.5.1 Design . . . 10-33
10.5.2 Railing Types . . . 10-33
10.5.2.A Bridge Pedestrian Railing Type BP-10 . . . 10-33
10.5.2.B Bridge Pedestrian Railing Type BP-22 . . . 10-33
10.5.2.C Bridge Pedestrian Railing Type BP-12 . . . 10-33
10.5.2.D Bridge Pedestrian Railing Type BP-54 . . . 10-34
10.5.2.E Bridge Railing Type Snow Fence . . . 10-34
10.5.2.F Bridge Railing Type Chain Link Fence . . . 10-34
10.6 Bridge Approach Slabs . . . 10-35
10.6.1 Notes to Region for Preliminary Plan . . . 10-36
10.6.2 Bridge Approach Slab Design Criteria . . . 10-36
10.6.3 Bridge Approach Slab Detailing . . . 10-36
10.6.4 Skewed Bridge Approach Slabs . . . 10-37
10.6.5 Approach Anchors and Expansion Joints . . . 10-39
10.6.6 Bridge Approach Slab Addition or Retrofit to Existing Bridges . . . 10-39
10.6.7 Bridge Approach Slab Staging . . . 10-41
10.7 Traffic Barrier on Bridge Approach Slabs . . . 10-42
10.7.1 Bridge Approach Slab over Wing Walls, Cantilever Walls or Geosynthetic Walls . . . 10-42
10.7.2 Bridge Approach Slab over SE Walls . . . 10-44
10.8 Utilities Installation on New and Existing Structures . . . 10-45
10.8.1 General Concepts . . . 10-45
10.8.1.A Responsibilities of the Utility Company . . . 10-45
10.8.1.B Confined Spaces . . . 10-45
10.8.1.C Coating and Corrosion Protection . . . 10-45
10.8.2 Utility Design Criteria . . . 10-48
10.8.2.A Utility Location . . . 10-48
10.8.2.B Termination at the Bridge Ends . . . 10-48
10.8.2.C Utility Expansion . . . 10-49
10.8.2.D Utility Blockouts . . . 10-49
10.8.2.E Gas Lines or Volatile Fluids . . . 10-49
10.8.2.F Water Lines . . . 10-49
10.8.2.G Sewer Lines . . . 10-50
10.8.2.H Electrical (Power and Communications) . . . 10-50
10.8.3 Box/Tub Girder Bridges . . . 10-50
10.8.4 Traffic Barrier Conduit . . . 10-51
10.8.5 Conduit Types . . . 10-51

10.8.6 Utility Supports . . . 10-51
10.8.6.A Concrete Embedment . . . 10-52
10.8.6.B Pipe Hangers . . . 10-52
10.8.6.C Surface Mounting . . . 10-52
10.9 Review Procedure for Utility Installations on Existing Structures . . . 10-53
10.9.1 Utility Review Checklist . . . 10-54
10.10 Anchors for Permanent Attachments . . . 10-55
10.11 Drainage Design . . . 10-56
10.11.1 Geometrics . . . 10-56
10.11.2 Hydrology . . . 10-56
10.11.3 On Bridge Systems . . . 10-56
10.11.4 Construction . . . 10-56
10.12 Bridge Security . . . 10-57
10.12.1 General . . . 10-57
10.12.2 Design . . . 10-57
10.12.3 Design Criteria . . . 10-58
10.13 Temporary Bridges . . . 10-59
10.13.1 General . . . 10-59
10.13.2 Design . . . 10-59
10.13.2.A One To Two Construction Season Temporary Bridges . . . 10-59
10.13.2.B Three To Five Construction Season Temporary Bridges . . . 10-59
10.13.2.B.1 Design Requirements . . . 10-59
10.13.2.B.2 Seismic Design Requirements . . . 10-60
10.13.2.B.3 Deck Design Requirements . . . 10-60
10.13.2.B.4 Superstructure Design Requirements . . . 10-60
10.13.2.B.5 Foundation Design Requirements . . . 10-60
10.13.3 NBI Requirements . . . 10-61
10.13.4 Submittal Requirements . . . 10-61
10.14 Bridge Standard Drawings . . . 10-62
10.99 References . . . 10-65

Chapter 10 Signs, Barriers, Approach Slabs, and Utilities

10.1 Sign and Luminaire Supports

10.1.1 Loads

10.1.1.A General

The reference used in developing the following office criteria is the AASHTO LRFD *Standard Specifications for Structural Supports for Highway Signs, Luminaires, and Traffic Signals*, First Edition dated 2015 (including latest interims), and shall be the basis for analysis and design.

10.1.1.B Dead Loads

Sign:
(Including panel and wind beams; does not include vert. bracing)3.25 lbs/ft^2
Luminaire (effective projected area of head = 3.3 sq ft)60 lbs/each
Fluorescent Lighting3.0 lbs/ft
Standard Signal Head60 lbs/each
Mercury Vapor Lighting6.0 lbs/each/
inch of length
Sign BracketsCalc.
Structural MembersCalc.
5 foot wide maintenance walkway:
(Including mounting brackets and handrail)160 lbs/ft
Signal Head w/3 lenses:
(Effective projected area with backing plate = 9.2 sq ft)60 lbs/each

10.1.1.C Live Load

A live load consisting of a single load of 500 lb distributed over 2.0 feet transversely to the member shall be used for designing members for walkways and platforms. The load shall be applied at the most critical location where a worker or equipment could be placed, see AASHTO 2015, Section 3.6.

10.1.1.D Wind Loads

A 3 second gust wind speed shall be used in the AASHTO wind pressure equation. The 3 second wind gust map in AASHTO is based on the wind map in ANSI/ASCE 7-16.

Basic wind speed of 115 mph shall be used in computing design wind pressure using equation 3.8.1-1 of AASHTO Section 3.8.1. This is based on the high risk category with a mean recurrence interval of 1700 years per AASHTO Table 3.8-1.

The Alternate Method of Wind Pressures given in Appendix C of the AASHTO 2015 Specifications shall not be used.

10.1.1.E Fatigue Design

Fatigue design shall conform to AASHTO Section 11 with the exception of square and rectangular tube shape. AASHTO does not provide fatigue calculations for shapes with less than 8 sides. Therefore, calculating the Constant Amplitude Fatigue Threshold, D_T (Table 11.9.3.1-2, AASHTO 2015) was taken to be the larger outer flat to flat distance of the rectangular tube. Fatigue Categories are listed in Table 11.6-1. Overhead Cantilever and Bridge Sign and signal structures, high-mast lighting towers (HMLT), poles, and bridge mounted sign brackets shall conform to the following fatigue categories.

Fatigue Category I: Overhead cantilever sign structures (maximum span of 35 feet and no VMS installation), overhead sign bridge structures, high-mast lighting towers 55 feet or taller in height, bridge-mounted sign brackets, and all signal bridges. Gantry or pole structures used to support sensitive electronic equipment (tolling, weigh-in-motion, transmitter/receiver antennas, transponders, etc.) shall be designed for Fatigue Category I, and shall also meet any deflection limitations imposed by the electronic equipment manufacturers.

Fatigue Category II: For structures not explicitly falling into Category I or III.

Fatigue Category III: Lighting poles less than 55 feet in height with rectangular or square cross sections, or non-tapered round cross sections, and overhead cantilever traffic signals (maximum cantilever length 65 feet).

Sign bridges, cantilever sign structures, signal bridges, and overhead cantilever traffic signals mounted on bridges shall be either attached to substructure elements (e.g., crossbeam extensions) or to the bridge superstructure at pier locations. Mounting these features to bridges as described above will help to avoid resonance concerns between the bridge structure and the signing or signal structure.

CCTV camera pole shall meet deflection criteria specified on Standard Plan J-29-15 for fixed base.

The "XYZ" limitation shown in Table 10.1.4-2 shall be met for Monotube Cantilevers. The "XYZ" limitation consists of the product of the sign area (XY) and the arm from the centerline of the posts to the centerline of the sign (Z). See Appendix 10.1-A2-1 for details.

10.1.1.F Ice and Snow Loads

A 3 psf ice load may be applied around all the surfaces of structural supports, horizontal members, and luminaires, but applied to only one face of sign panels (Section 3.7, AASHTO 2015).

Walk-through VMS shall not be installed in areas where appreciable snow loads may accumulate on top of the sign, unless positive steps are taken to prevent snow build-up.

10.1.1.G Group Load Combinations

Sign, luminaire, and signal support structures are designed using the load factors from Table 3.4-1, AASHTO 2015 (including latest interims).

10.1.1.H Impact Loads

Vehicle impact loads shall be applied to sign, luminaire and traffic signal foundations that are integrated into roadside traffic barriers. The vehicle impact loads shall be applied at the height specified for intended test levels in accordance with the AASHTO LRFD Section 13 Table A13.2-1 "Design Forces For Traffic Railing (32-inch for TL-4 and 42-inch for TL-5)."

Structural supports for signs, luminaires and traffic signals are normally not designed for the application of vehicle impact loads (with the exception of pole or post-type supports on break-away bases).

10.1.2 Bridge Mounted Signs

10.1.2.A Vertical Clearance

All new signs mounted on bridge structures shall be positioned such that the bottom of the sign or lighting bracket does not extend below the bottom of the bridge as shown in Figure 10.1.2-1. The position of the sign does not need to allow for the future placement of lights below the sign. If lights are to be added in the future they will be mounted above the sign. To ensure that the bottom of the sign or lighting bracket is above the bottom of the bridge, the designer shall maintain at least a nominal 2 inch dimension between the bottom of the sign or lighting and the bottom of the bridge to account for construction tolerances and bracket arm sag.

Bridge mounted sign brackets shall be designed to account for the weight of added lights, and for the wind effects on the lights to ensure bracket adequacy if lighting is attached in the future.

Figure 10.1.2-1 Sign Vertical Clearance

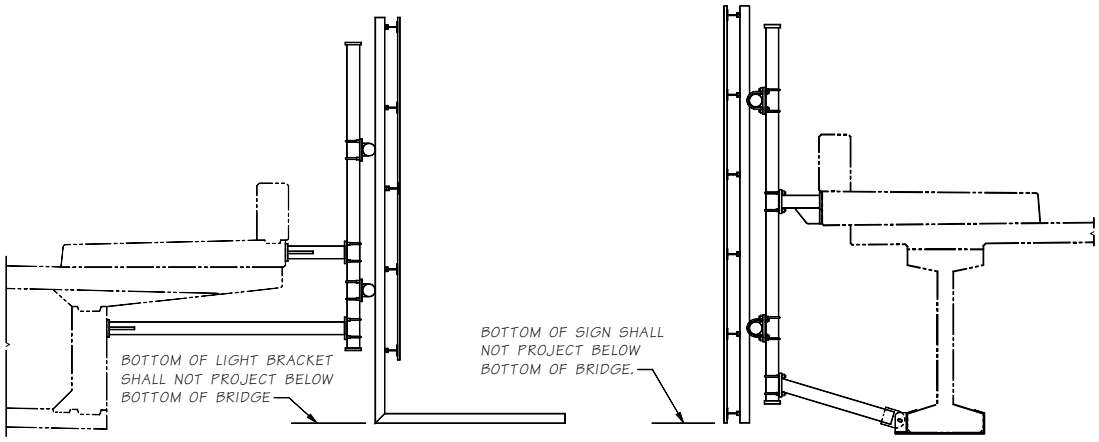

10.1.2.B Geometrics

1. Signs shall be installed at approximate right angles to approaching motorists. For structures above a tangent section of roadway, signs shall be designed to provide a sign skew within 5° from perpendicular to the lower roadway (see Figure 10.1.2-2).

Figure 10.1.2-2 Sign Skew on Tangent Roadway

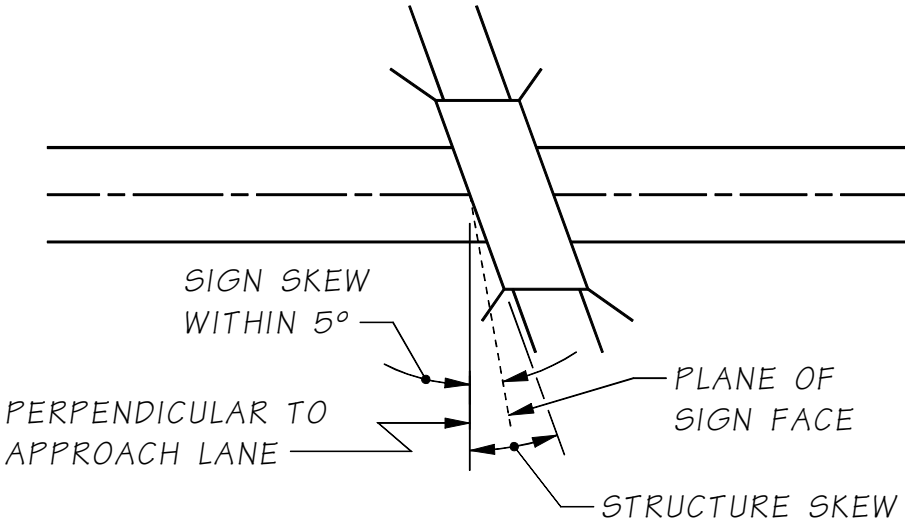

2. For structures located on or just beyond a horizontal curve of the lower roadway, signs shall be designed to provide a sign chord skew within 5° from perpendicular to the chord-point determined by the approach speed (see Figure 10.1.2-3).

Figure 10.1.2-3 Sign Skew on Curved Roadway

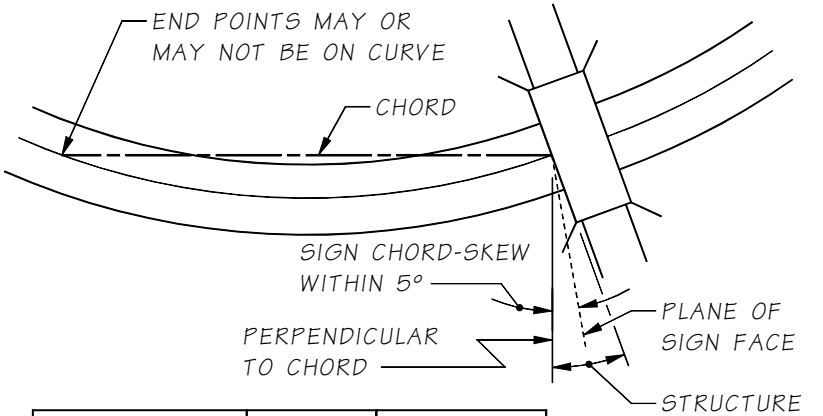

SPEED LIMIT	35 MPH OR LESS	MORE THAN 35 MPH
CHORD LENGTH	300'	500'

3. The top of the sign shall be level. Maximum sign height shall be decided by the Region. If the structure is too high above the roadway, then the sign shall not be placed on the structure (see Figure 10.1.2-4).

Figure 10.1.2-4

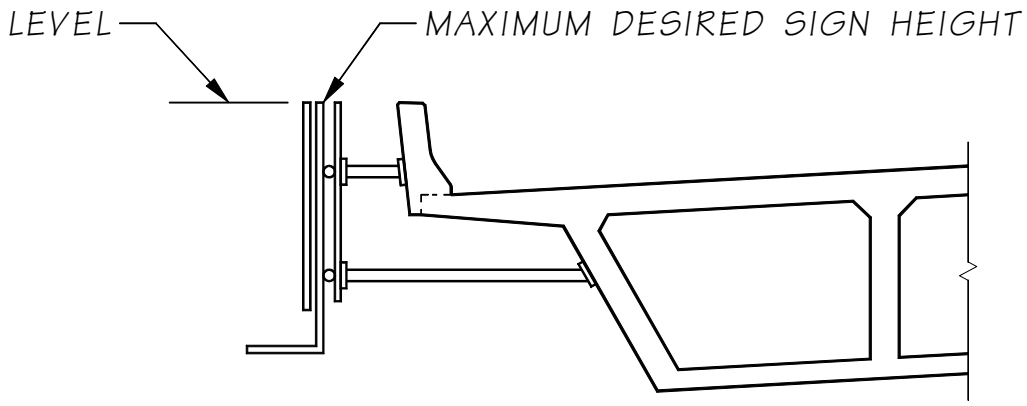

10.1.2.C Aesthetics

1. The support structure shall not extend beyond the limits of the sign unless the extension is unavoidable.
2. The sign support shall be detailed in such a manner that will permit the sign and lighting bracket to be installed level.
3. When the sign support will be exposed to view, special consideration is required in determining member sizes and connections to provide as pleasing an appearance as possible.

10.1.2.D Sign Placement

1. Signs shall not be placed under bridge overhangs. This causes partial shading or partial exposure to the elements and problems in lifting the material into position and making the required connections. Signs shall never be placed directly under the drip-line of the structure. These conditions may result in uneven fading, discoloring, and difficulty in reading.

2. A minimum of 2 inches of clearance shall be provided between back side of the sign support and edge of the bridge. See Figure 10.1.2-5.

Figure 10.1.2-5 Sign Horizontal Location

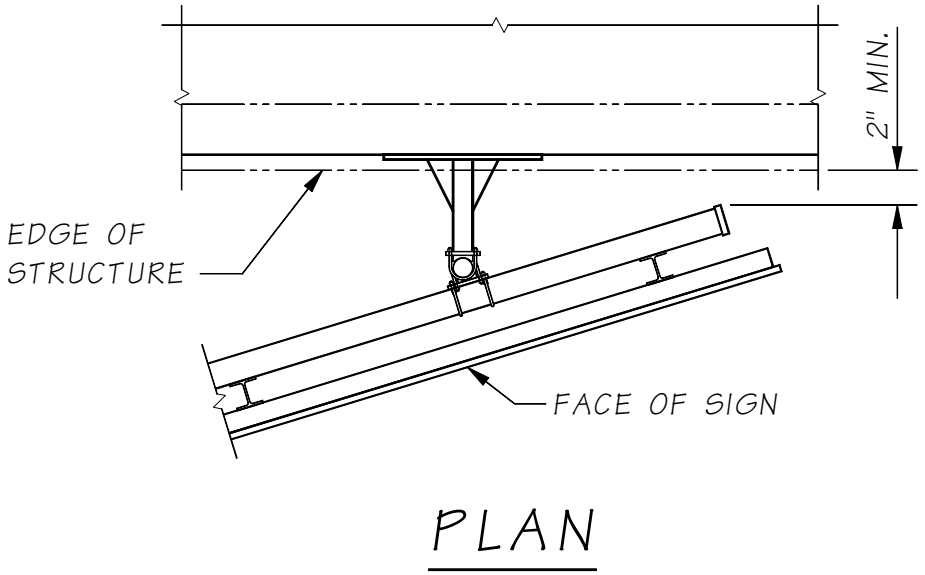

3. Bridge mounting of wide sign panels on bridges with significant skew will result in excessive bracket arm length. Sign panel width/skew combinations that result in excessive arm lengths shall not be used. Top arm lengths exceeding 7'-0", or any arm length with load demands exceeding the capacity of a 4" diameter standard pipe are considered excessive.
4. VMS units shall not be installed on bridge mounted sign brackets.

10.1.2.E Installation

1. Adhesive anchors or cast-in-place ASTM F593 Type 304, Group 1 Condition CW, anchor rods shall be used to install the sign brackets on the structure. Size and minimum installation depth shall be given in the plans or specifications. The adhesive anchors shall be installed normal to the concrete surface. Adhesive anchors shall not be placed through the webs or flanges of prestressed or post-tensioned girders unless approved by the WSDOT State Bridge Design Engineer. Adhesive anchors shall not be used at overhead locations other than with horizontal hole/anchor alignment.
2. Bridge mounted sign structures shall not be placed on bridges with steel superstructures unless approved by the WSDOT State Bridge Design Engineer.

10.1.2.F Installing/Replacing New Sign on Existing Bracket Supports

When installing a new sign on existing bracket supports, the following shall be required:

1. All hardware shall be replaced per the current *Standard Specifications*.
2. The new sign area shall not exceed the original designed sign area.
3. The inspection report for the bracket shall be reviewed to ensure that the supports are in good condition. If there is not an inspection report, then an inspection shall be performed on the bracket.

10.1.2.G Detailing

For standard bridge mounted sign bracket details see Bridge Standard Drawings 10.1-A6-1 to 10.1-A6-5. All information shown in the Layout (Bridge Standard Drawing 10.1-A6-1) shall be included on the contract plans. This is provided to allow WSDOT sign inspectors to locate and identify the sign and bridge with the as-built layout. When attaching the lower bracket arm to concrete I-girders, concrete, box/tub girders, or steel I-girders, use Bridge Standard Drawing 10.1-A6-4A, 10.1-A6-4B, or 10.1-A6-4C, respectively.

10.1.3 Monotube Sign Structures Mounted on Bridges

10.1.3.A Design Loads

Design loads for the supports of the Sign Bridges shall be calculated based on assuming a 12-foot-deep sign over the entire roadway width, under the sign bridge, regardless of the sign area initially placed on the sign bridge. For Cantilever design loads, guidelines specified in Section 10.1.1 shall be followed. The design loads shall follow the same criteria as described in Section 10.1.1. Loads from the sign bridge shall be included in the design of the supporting bridge.

In cases where a sign structure is mounted on a bridge, the sign structure, from the anchor bolt group and above, shall be designed to AASHTO LRFD *Standard Specifications for Structural Supports for Highway Signs, Luminaires, and Traffic Signals* First Edition, dated 2015 including interims. The concrete, the anchor bolt group, and the connecting elements to the bridge structure shall be designed to the specifications in this manual and AASHTO LRFD. The loads calculated from the AASHTO LRFD Specifications for Structural Supports for Signs, Luminaires and Traffic Signals (AASHTO SLTS) shall be considered as Service Loads (LF =1.0). These Service Loads shall be factored as required for the Strength and Extreme Limit States described in AASHTO LRFD Table 3.4.1-1, and used for design of sign structure foundation elements incorporated into new structures. For sign structure foundation elements attached to older structures originally designed using Allowable Stress Design, the loads calculated using AASHTO SLTS may be considered as Service Loads.

10.1.3.B Vertical Clearance

Vertical clearance for Monotube Sign Structures shall be 20′-0″ minimum from the bottom of the lowest sign to the highest point in the traveled lanes. See Appendix 10.1-A1-1, 10.1-A2-1, and 10.1-A3-1 for sample locations of Minimum Vertical Clearances.

10.1.3.C Geometrics

Sign structures shall be placed at approximate right angles to approaching motorists. Dimensions and details of sign structures are shown in Appendix 10.1-A1-1, 10.1-A1-2, and 10.1-A1-3 and 10.1-A2-1, 10.1-A2-2, and 10.1-A2-3. When maintenance walkways are included, refer to Standard Plans G-95.10, G-95.20, G-95.30.

10.1.4 Monotube Sign Structures

10.1.4.A Sign Bridge Conventional Design

Table 10.1.4-1 provides the conventional structural design information to be used for a Sign Bridge Layout, Bridge Standard Drawing 10.1-A1-1; along with the Structural Detail sheets, which are Bridge Standard Drawing 10.1-A1-2 and Bridge Standard Drawing 10.1-A1-3; General Notes, Bridge Standard Drawing 10.1-A5-1; and Miscellaneous Details, Bridge Standard Drawing 10.1-A5-2.

10.1.4.B Cantilever Conventional Design

Table 10.1.4-2 provides the conventional structural design information to be used for a Cantilever Layout, Bridge Standard Drawing 10.1-A2-1; along with the Structural Detail sheets, which are Bridge Standard Drawing 10.1-A2-2 and Bridge Standard Drawing 10.1-A2-3; General Notes, Bridge Standard Drawing 10.1-A5-1; and Miscellaneous Details, Bridge Standard Drawing 10.1-A5-2.

Table 10.1.4-1 Standard Monotube Sign Bridges

SPAN LENGTH	POSTS Ⓥ				BEAM A Ⓥ				BEAM B Ⓥ				BEAM C Ⓥ				BEAM D Ⓥ				CAMBER
"S"	"H"	"A"	"B"	"T1"	"L1"	"B"	"C"	"T2"	"L2"	"B"	"C"	"T2"	"L3"	"B"	"C"	"T2"	"L3"	"B"	"C"	"T2"	
LESS THAN 60'-0"	30'-0" OR LESS	1'-6"	2'-0"	½"	6'-0"	2'-0"	2'-0"	½"	0'-0"	2'-0"	2'-0"	½"	13'-0" TO 48'-0"	2'-0"	2'-0"	½"	-	-	-	-	2¾"
60'-0" TO 75'-0"	30'-0" OR LESS	1'-6"	2'-3"	⅝"	6'-0"	2'-3"	2'-0"	⅝"	9'-0" TO 14'-0"	2'-3"	2'-0"	⅝"	30'-0" TO 35'-0"	2'-3"	2'-0"	⅝"	-	-	-	-	3¾"
+75'-0" TO 90'-0"	30'-0" OR LESS	1'-6"	2'-3"	⅝"	6'-0"	2'-3"	2'-0"	⅝"	14'-0" TO 19'-0"	2'-3"	2'-0"	⅝"	35'-0" TO 40'-0"	2'-3"	2'-0"	⅝"	-	-	-	-	5"
+90'-0" TO 105'-0"	30'-0" OR LESS	1'-9"	2'-6"	⅝"	6'-0"	2'-6"	2'-3"	⅝"	19'-0" TO 26'-6"	2'-6"	2'-3"	⅝"	40'-0"	2'-6"	2'-3"	⅝"	-	-	-	-	6"
+105'-0" TO 120'-0"	30'-0" OR LESS	1'-9"	2'-6"	⅝"	6'-0"	2'-6"	2'-3"	⅝"	16'-6" TO 34'-0"	2'-6"	2'-3"	⅝"	40'-0"	2'-6"	2'-3"	⅝"	-	-	-	-	7½"
+120'-0" TO 135'-0"	30'-0" OR LESS	2'-0"	2'-8"	⅝"	6'-0"	2'-8"	2'-8"	⅝"	34'-0" TO 41'-6"	2'-8"	2'-8"	⅝"	40'-0"	2'-8"	2'-8"	⅝"	-	-	-	-	8½"
+135'-0" TO 150'-0"	30'-0" OR LESS	2'-0"	2'-8"	⅝"	6'-0"	2'-8"	2'-8"	⅝"	41'-6" TO 49'-0"	2'-8"	2'-8"	⅝"	40'-0"	2'-8"	2'-8"	⅝"	-	-	-	-	10½"
+150'-0" TO 165'-0"	30'-0" OR LESS	2'-0"	2'-8"	¾"	6'-0"	2'-8"	2'-8"	⅝"	27'-0"	2'-8"	2'-8"	⅝"	18'-5" TO 25'-6"	2'-8"	2'-8"	⅝"	48'-0"	2'-8"	2'-8"	⅝"	13¾"
+165'-0" TO 180'-0"	30'-0" OR LESS	2'-0"	2'-8"	¾"	6'-0"	2'-8"	2'-8"	⅝"	30'-0"	2'-8"	2'-8"	⅝"	22'-6" TO 30'-0"	2'-8"	2'-8"	⅝"	48'-0"	2'-8"	2'-8"	⅝"	15¾"

SPAN LENGTH	POST BASE Ⓥ					BOLTED SPLICE #1 L1 TO L2 AND L1 TO L3						BOLTED SPLICE #2 L2 TO L3						BOLTED SPLICE #3 L3 TO L4						MAXIMUM SIGN AREA
"S"	"D1"	"S5"	"S6"	"T3"	"T6"	"S1"	"S2"	"S3"	"S4"	"T4"	"T5"	"S1"	"S2"	"S3"	"S4"	"T4"	"T5"	"S1"	"S2"	"S3"	"S4"	"T4"	"T5"	
LESS THAN 60'-0"	1½"	4	4	3"	¾"	5	-	5	-	2"	⅝"	-	-	-	-	-	-	-	-	-	-	-	-	600 SQ. FT.
60'-0" TO 75'-0"	1¾"	4	4	3"	¾"	6	-	5	-	2"	⅝"	6	-	5	-	2¼"	¾"	-	-	-	-	-	-	700 SQ. FT.
+75'-0" TO 90'-0"	1¾"	4	4	3"	¾"	6	-	5	-	2"	⅝"	6	-	5	-	2¼"	¾"	-	-	-	-	-	-	800 SQ. FT.
+90'-0" TO 105'-0"	1¾"	4	5	3"	1"	7	-	6	-	2"	⅝"	7	5	6	4	2½"	1"	-	-	-	-	-	-	900 SQ. FT.
+105'-0" TO 120'-0"	1¾"	4	5	3"	1"	7	-	6	-	2"	⅝"	7	5	6	4	2½"	1"	-	-	-	-	-	-	900 SQ. FT.
+120'-0" TO 135'-0"	2"	4	5	3"	1"	7	5	7	5	2"	⅝"	7	5	7	5	2½"	1"	-	-	-	-	-	-	900 SQ. FT.
+135'-0" TO 150'-0"	2"	4	5	3"	1"	7	5	7	5	2"	⅝"	7	5	7	5	2½"	1"	-	-	-	-	-	-	900 SQ. FT.
+150'-0" TO 180'-0"	2"	4	5	3"	1"	7	5	7	5	2"	⅝"	7	5	7	5	2½"	1"	7	5	7	5	2½"	1"	900 SQ. FT.

Ⓥ DENOTES MAIN LOAD CARRYING TENSILE MEMBERS OR TENSION COMPONENTS OF FLEXURAL MEMBERS.

Table 10.1.4-2 Standard Monotube Cantilevers

Span Length	Posts Ⓥ				Beam A Ⓥ				Beam B Ⓥ				
"S"	"H"	"A"	"B"	"T1"	"L1"	"B"	"C"	"T2"	"L2"	"B"	"C"	"T2"	Camber
Less Than 20'-0"	30'-0" or Less	1'-6"	2'-0"	½"	6'-0"	2'-0"	2'-0"	½"	14'-0"	2'-0"	2'-0"	½"	2"
20'-0" to 35'-0"	30'-0" Or Less	1'-6"	2'-0"	½"	6'-0"	2'-0"	2'-0"	½"	14'-0" TO 29'-0"	2'-0"	2'-0"	½"	3½"

Span Length	Post Base Ⓥ					Bolted Splice						Maximums		
"S"	"D1"	"S5"	"S6"	"T3"	"T6"	"S1"	"S2"	"S3"	"S4"	"T4"	"T5"	Sign Area	"XYZ"	"Z"
Less Than 20'-0"	1½"	4	4	2"	¾"	5	-	5	-	2"	⅝"	194 SQ. FT.	2920 C.F.	15'-0"
20'-0" to 30'-0"	2"	4	4	3"	¾ "	5	3	5	3	2½"	⅝"	330 SQ. FT.	5363 C.F.	20'-0"
+30'-0" to 35'-0"	2"	4	4	3"	¾ "	5	3	5	3	2½"	⅝"	235 SQ. FT.	5924 C.F.	25'-0"

Ⓥ ***Note:*** Denotes Main Load Carrying Tensile Members Or Tension Components Of Flexural Members.

10.1.4.C Balanced Cantilever Conventional Design

Bridge Standard Drawing 10.1-A3-1; along with the Structural Detail sheets, Bridge Standard Drawing 10.1-A3-2 and 10.1-A3-3, General Notes, Bridge Standard Drawing 10.1-A5-1; and Miscellaneous Details, Bridge Standard Drawing 10.1-A5-2, provides the conventional structural design information to be used for a Balanced Cantilever Layout. Balanced Cantilevers are typically for VMS sign applications and shall have the sign positioned so that no less than ⅓ of the sign dead load resides on either side of the post.

10.1.4.D VMS Installation

1. VMS units shall not be installed on unbalanced cantilever structures.
2. VMS installation on Sign Bridge structures designed in accordance with AASHTO 2015 shall be installed in accordance with the following:
   A. On spans 120 ft and greater up to two VMS units may be installed with a maximum weight of 4,000 lbs each. Maintenance walkways may be installed between VMS units, but may not exceed 160 lbs/ft, or exceed 50 percent of the structure span length.
   B. On spans less than 120 ft. up to three VMS units may be installed with a maximum weight of 4,000 lbs. each. Maintenance walkways may be installed between VMS units, but may not exceed 160 lbs/ft.
3. The number of VMS installed on Sign Bridge structures designed prior to AASHTO 2015 shall be reduced by one as defined in D.2-a and b.

10.1.4.E Monotube Sheet Guidelines

The following guidelines apply when using the Monotube Sign Structure Bridge Standard Drawing 10.1-A1-1, 10.1-A1-2, and 10.1-A1-3; 10.1-A2-1, 10.1-A2-2, and 10.1-A2-3; 10.1-A3-1, 10.1-A3-2, and 10.1-A3-3; 10.1-A4-1, 10.1-A4-2, and 10.1-A4-3; and 10.1-A5-1, 10.1-A5-2, and 10.1-A5-3.

1. Each sign structure shall be detailed to specify:
   A. Sign structure base Elevation, Station, and Number.
   B. Type of Foundation 1, 2, or 3 shall be used for the Monotube Sign Structures, unless a non-conventional design is required. The average Lateral Bearing Pressure for each foundation shall be noted on the Foundation sheet(s).
   C. If applicable, label the Elevation View "Looking Back on Stationing."
2. Designers shall verify the cross-referenced page numbers and details are correct.

10.1.4.F Monotube Quantities

Quantities for structural steel are given in Table 10.1.4-3.

Table 10.1.4-3 Sign Structure Material Quantities

ASTM A572 GR. 50 or ASTM 588	Cantilever			Sign Bridge							
	20' <	20' to 30'	Balanced	60' <	60' to 75'	75' to 90'	90' to 105'	105' to 120'	120' to 135'	135' to 150'	150' to 180'
Post (plf)	132	132	132	132	176	176	204	204	215	215	267
Base PL (lbs./ea)	537	806	806	672	735	735	888	888	978	978	1029
Beam, near Post (plf)	152	152	152	152	202	202	228	228	240	240	257
Span Beam (plf)	152	152	152	152	202	202	228	228	240	240	257
Corner Stiff. (lbs./ea set)	209	209	115	218	272	272	354	354	376	376	425
Splice Pl #1 (lbs/pair)	592	706	706	578	650	650	826	826	1116	1116	1295
Splice Pl #2 (lbs/pair)	--	--	--	--	730	730	1002	1002	1116	1116	1295
Splice Pl #3 (lbs/pair)	--	--	--	--	--	--	--	--	--	--	1295
Brackets (lbs./ea)	60	60	60	60	65	65	69	69	70	70	70
6" Hand Hole (lbs./ea)	18	18	18	18	18	18	18	18	18	18	18
6" x 11" Hand Hole (lbs./ea)	30	30	30	30	30	30	30	30	30	30	30
Anchor Bolt PL (lbs./ea)	175	175	175	175	185	185	311	311	326	326	326
Cover Plates (lbs./ea)	65	65	65	--	--	--	--	--	--	--	--

10.1.5 Foundations

10.1.5.A Monotube Sign Structure Foundation Types

The foundation type to be used shall be based on the geotechnical investigation performed and geotechnical report completed by the geotechnical engineer of record. Monotube sign structure foundations are Bridge Design Office conventional designs and shall be as described in the following paragraphs:

1. Foundation Type 1, is the preferred foundation type. A foundation Type 1 consists of a drilled shaft with its shaft cap. The design of the shaft depths shown in the Bridge Standard Drawings are based on an allowable lateral bearing pressure of 2,500 psf. The designer shall check these shaft depths using AASHTO LRFD methodology. For Type 1 foundation details and shaft depths see Bridge Standard Drawings 10.1-A4-1

and 10.1-A4-2. The Geotechnical Report for Foundation Type 1 should include the soil friction angle, soil unit weight, allowable lateral bearing pressure and temporary casing if required. Temporary casing shall be properly detailed in all Foundation Type 1 sheets if the Geotechnical Engineer requires them.

2. Foundation Type 2 is an alternate to Type 1 when drilled shafts are not suitable to the site. Foundation Type 2 is designed for an allowable lateral bearing pressure of 2,500 psf. See Bridge Standard Drawing 10.1-A4-3 for Foundation Type 2 Bridge Design Office conventional design information. The designer shall check these shaft depths using LRFD methodology.
3. Foundation Type 3 replaces the foundation Type 2 for poor soil conditions where the allowable lateral bearing pressure is between 2,500 psf and 1,500 psf. See Bridge Standard Drawing 10.1-A4-3 for Type 3 Foundation Bridge Design Office conventional design information. The designer shall check these shaft depths using LRFD methodology.
4. Barrier Shape Foundations are foundations that include a barrier shape cap on the top portion of Foundation Types 1, 2, and 3. Foundation details shall be modified to include Barrier Shape Cap details. Appendix 10.1-A5-1 details a single slope barrier.

10.1.5.B Luminaire, Signal Standard, and Camera Pole Foundation Types

Luminaire foundation options are shown on Standard Plan J-28.30. Signal Standard and Camera Pole foundation options are provided on Standard Plans J-26.10 and J-29.10 respectively.

10.1.5.C Foundation Design

Shaft type foundations constructed in soil for sign bridges, cantilever sign structures, luminaires, signal standards and strain poles shall be designed in accordance with the current edition of the AASHTO LRFD *Standard Specifications for Highway Signs, Luminaires, and Traffic Signals*; Section 13.6 Drilled Shafts.

For stratified soil conditions, a weighted average approach should be used to calculate a uniform set of soil properties (soil friction angle, soil unit weight, allowable lateral bearing pressure) for foundation design.

No provisions for foundation torsional capacity are provided in Section 13.6 of the AASHTO LRFD *Standard Specifications for Highway Signs, Luminaires, and Traffic Signals*. The following approach can be used to calculate torsional capacity of sign structure, luminaire, and signal standard foundations:

Torsional Capacity, ϕT_n,

$$T_n = F^{*}\tan\phi D/2 \qquad 10.1.5(1)$$

Where:

F = Total force normal to shaft surface (kip)
D = Diameter of shaft (feet)
ϕ = Soil to foundation contact friction angle (degree), use smallest for variable soils

10.1.5.C.1 *Monotube Sign Structures Foundation Type 1 Design*

The standard embedment depth "Z", shown in the table on Monotube Sign Structure Standard Drawing 10.1-A4-1, shall be used as a minimum embedment depth and shall be increased if the shaft is placed on a sloped surface. The standard depth assumed that the top 4 feet of the C.I.P. cap is not included in the lateral resistance (i.e., shaft depth "D" in the code mentioned above), but is included in the overturning length of the sign structure. The sign structure shaft foundation GSPs under Section 8-21 in the RFP Appendix shall be included with all Foundation Type 1 shafts.

10.1.5.C.2 *Monotube Sign Structures Foundation Type 2 and 3*

These foundation designs are Bridge Design Office convention and shall not be adjusted or redesigned. They are used in conditions where a Foundation Type 1 (shaft) would be impractical due to difficult drilling or construction and when the State Geotechnical Engineer specifies their use. The concept is that the foundation excavation would maintain a vertical face in the shape of the Foundation Type 2 or 3. Contractors often request to over-excavate and backfill the hole, after formwork has been used to construct this foundation type. This is only allowed with the State Geotechnical Engineer's approval, if the forming material is completely removed, and if the backfill material is either CDF or concrete class 3000 or better.

10.1.5.C.3 *Monotube Sign Structures Non-Conventional Design Foundations*

The Geotechnical Engineer of record shall identify conditions where the foundation types (1, 2, or 3) will not work. In this case, the design forces are calculated, using the AASHTO LRFD *Standard Specifications for Structural Supports for Highway Signs, Luminaires, and Traffic Signals*, and applied at the bottom of the structure base plate. These forces are then considered service loads and the non-conventional design foundation is designed with the appropriate Service, Strength, and Extreme Load Combination Limit States and current design practices of the AASHTO LRFD and this manual. Some examples of these foundations are spread footings, columns and shafts that extend above ground adjacent to retaining walls, or connections to traffic barriers on bridges. The anchor rod array shall be used from Tables 10.1.4-1 and 10.1.4-2 and shall be long enough to develop the rods into the confined concrete core of the foundation. The rod length and the reinforcement for concrete confinement, shown in the top four feet of the Foundation Type 1, shall be used as a minimum.

10.1.5.C.4 *Signal Foundation Design*

The traffic signal standard GSPs under Section 8-20 shall apply for foundations in substandard soils.

10.1.5.D Foundation Quantities

1. Barrier quantities are approximate and can be used for all Foundation Types:

Class 4000 Concrete	7.15 CY (over shaft foundation)
Grade 60 Rebar	372 lbs

2. Miscellaneous steel quantities (anchor rods, anchor plate, and template) for all Monotube Sign Structure foundation types are listed below (per foundation). Quantities vary with span lengths as shown.

60 feet and under	= 1,002 pounds
61 feet to 90 feet	= 1,401 pounds
91 feet to 120 feet	= 1,503 pounds
121 feet to 180 feet	Barrier mounted sign bridge not recommended for these spans.

3. Monotube Sign Structure Foundation Type 1-3 quantities for concrete, rebar and excavation are given in Table 10.1.5-1. For Sign Bridges, the quantities shown below are for one foundation and there are two foundations per Sign Bridge. If the depth "Z" shown in the table on Bridge Standard Drawing 10.1-A4-1 is increased, these values should be recalculated.

Table 10.1.5-1 Sign Structure Foundation Material Quantities

	Cantilever Signs			Sign Bridges			
Concrete Cl. 4000 (cu. yard)	**20′ and Under**	**20′ – 30′**	**30' – 35'**	**60′ and Under**	**60′ – 90′**	**90′ – 120′**	**120′ – 180′**
Type 1	6.3	7.5	9.4	7.7	9.4	10.6	11.4
Type 2	8.0	10.5	12.2	10.0	12.2	14.1	15.0
Type 3	11.1	14.1	16.1	13.0	16.1	18.6	20.0
Rebar Gr. 60 Pounds							
Type 1	685	1,027	2,251	1,168	2,251	3,256	4,255
Type 2	772	1,233	1,724	1,190	1,724	2,385	2,838
Type 3	917	1,509	2,136	1,421	2,136	2,946	3,572
Excavation (cu. yard)							
Type 1	9.8	10.9	12.8	10.9	12.8	14.1	14.9
Type 2	20.7	25.7	29.0	24.6	29.0	32.9	34.6
Type 3	29.0	34.6	39.0	32.9	39.0	44.0	47.8

10.2 Bridge Traffic Barriers

10.2.1 General Guidelines

The design criteria for traffic barriers on structures shall be in accordance with Section 13 of the AASHTO LRFD. The following guidelines supplement the requirements in AASHTO LRFD.

There are three avenues for acceptance for use of roadside safety hardware on bridge traffic barriers and structures as follows:

- Use of a current WSDOT standard[1] within the limits of application as described or implied by that standard.
- Use of a successfully crash tested system to MASH 2016 along with a review by WSDOT which results in the system being accepted for use within Washington State.
- Modifications of WSDOT standards or successfully crash tested systems made with roadside safety considerations and reviewed by WSDOT which results in the modified system being accepted for use within Washington State.

Inclusion of details, configurations, or systems within a standard does not imply or give acceptance for the details, configurations, or systems to be used within Washington State outside of the limits and conditions as described or implied by those standards.

Any details, configurations, or systems approved on a project specific basis may not be used outside the scope or limits of that project without WSDOT review and approval.

The WSDOT Bridge and Structures standard for traffic barriers on new bridges, bridge approach slabs, retaining walls, Structural Earth Wall traffic barriers, and Geosynthetic wall traffic barrier and differential grade median traffic barriers shall be a 42 inch Single Slope concrete barrier for all Interstate, United States Numbered Highway System, and State highway routes unless special conditions apply. The 42 inch height is for fall protection in accordance with WAC 296-880 and as described in the *Design Manual* Chapter 1060.

The WSDOT Bridge and Structures standard for existing bridges, bridge rehabilitation projects, and median barrier shall be a 34 inch or 42 inch Single Slope traffic barrier.

Use of a 32 inch or 42 inch F Shape concrete barrier shall be limited to locations where there is F Shape concrete barrier on the approach grade to a bridge or for continuity within a corridor.

Use of a 34 inch Pedestrian concrete barrier shall be limited to locations with sidewalk.

Use of a 42 inch or 54 inch combination barrier (32 inch, 34 inch, or 42 inch concrete barrier increased by metal railing) are less economical, require more maintenance, and shall be limited for purposes such as scenic roads. For additional requirements for pedestrian and bicycle/pedestrian railings, see Section 10.5.1.

[1] Regarding roadside safety elements accepted for use the following are considered WSDOT standards which may require design: WSDOT Standard Plans, WSDOT Bridge Standard Drawings, and barrier systems included within Section 10.2.3-Available WSDOT Designs.

It shall be the Bridge and Structures Office policy to design traffic barriers for new structures using a minimum Test Level 4 (TL-4) design criteria regardless of the height of the barrier safety shape. The Test Level shall be indicated in the Bridge General Notes or General Notes. A Test Level 5 (TL-5) traffic barrier shall be used on new structures under the following conditions:

- "T" intersections on a structure.
- Barriers on structures with a radius of curvature less than 500 ft, TL-4 is adequate for the barrier on the inside of the curve.
- Greater than 10 percent Average Daily Truck Traffic (ADTT) where approach speeds are 50 mph or greater (e.g., freeway off-ramps).
- Accident history suggests a need.
- Protection of schools, business, or other important facilities below the bridge.

See AASHTO LRFD Section 13 for additional Test Level selection criteria.

10.2.2 Bridge Railing Test Levels

It must be recognized that bridge traffic barrier performance needs differ greatly from site to site. Barrier designs and costs should match facility needs. This concept is embodied in the AASHTO LRFD. Six different bridge railing test levels, TL-1 thru TL-6, and associated crash test/performance requirements are given in AASHTO LRFD Section 13 along with guidance for determining the appropriate test level for a given bridge. Any reduction in Test Level requires approval by the State Bridge Design Engineer, or the Bridge Barrier Specialist acting upon their behalf.

10.2.3 Available WSDOT Designs

10.2.3.A Service Level 1 (SL-1) Weak Post Guardrail (TL-2)

This bridge traffic barrier is a crash tested weak post rail system. It was developed by Southwest Research Institute and reported in NCHRP Report 239 for low-volume rural roadways with little accident history. This design has been utilized on a number of short concrete spans and timber bridges. A failure mechanism is built into this rail system such that upon a 10 kip applied impact load, the post will break away from the mounting bracket. The thrie beam guardrail will contain the vehicle by virtue of its ribbon strength. This system was designed for a Working Stress design force of 10 kip applied at 22 inches above the deck surface. To ensure minimal or no damage to the bridge deck and stringers, the breakaway connection may be modified for a lower impact load (2 kip minimum) with approval of the State Bridge Design Engineer. The 2 kip minimum equivalent impact load is based on evaluation of the wood rail post strength tested in NCHRP Report 239. The appropriate guardrail approach transition shall be a Case 14 placement as shown on WSDOT Standard Plan C-2h. For complete details see Appendix 10.4-A1-4.

10.2.3.B Texas T-411 Aesthetic Concrete Baluster (TL-2)

Texas developed this standard for a section of highway that was considered to be a historic landmark. The existing deficient concrete baluster rail was replaced with a much stronger concrete baluster that satisfactorily passed the crash test performance criteria set forth by the NCHRP Report 230. For details, visit TXDOT's Bridge and Structures website at www.txdot.gov/inside-txdot/division/bridge.html.

Figure 10.2.3-1

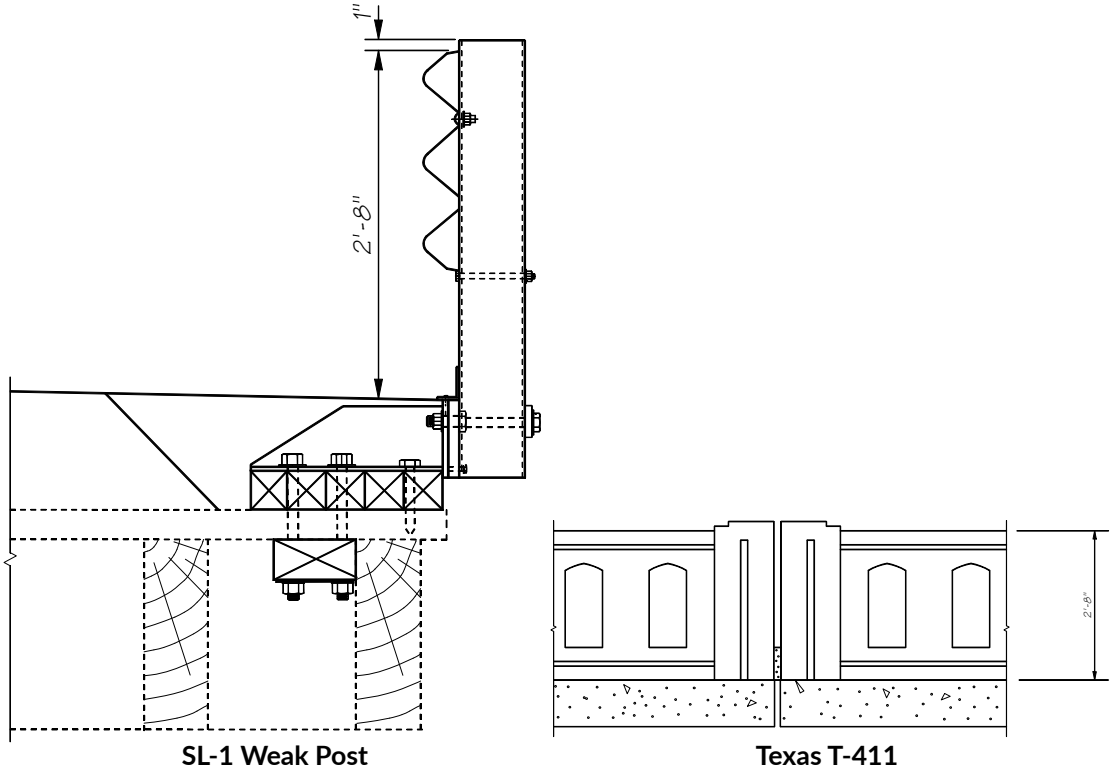

SL-1 Weak Post Texas T-411

10.2.3.C Traffic Barrier – 32″ F-Shape (TL-3)

This configuration was crash tested in the late 1960s, along with the New Jersey Shape, under NCHRP 230 and again at this test level under NCHRP 350. The steeper vertical shape tested better than the New Jersey face and had less of an inclination to roll vehicles over upon impact. For future deck overlays, an encroachment of 2.0 in., leaving a 1.0 in. lip has been satisfactorily tested for safety shapes, see AASHTO Article C13.7.3.2. This barrier height will require the use of a Bridge Railing Type Pedestrian railing to meet fall protection requirements. For complete details see Bridge Standard Drawings 10.2-A1 and 10.2-A2.

10.2.3.D Traffic Barrier – 34″ Single Slope (TL-3)

This concrete traffic barrier system was designed by the state of California in the 1990s to speed up construction by using the "slip forming" method of construction. It was tested under NCHRP 350. WSDOT has increased the height from 32″ to 34″ to match the approach traffic barrier height and to allow the placement of one HMA overlay. Due to inherent problems with the "slip forming" method of traffic barrier construction WSDOT has increased the concrete cover on the traffic side from 1½″ to 2½″. This barrier height will require the use of a Bridge Railing Type Pedestrian railing to meet fall protection requirements. For complete details, see Bridge Standard Drawing 10.2-A3.

Figure 10.2.3-2

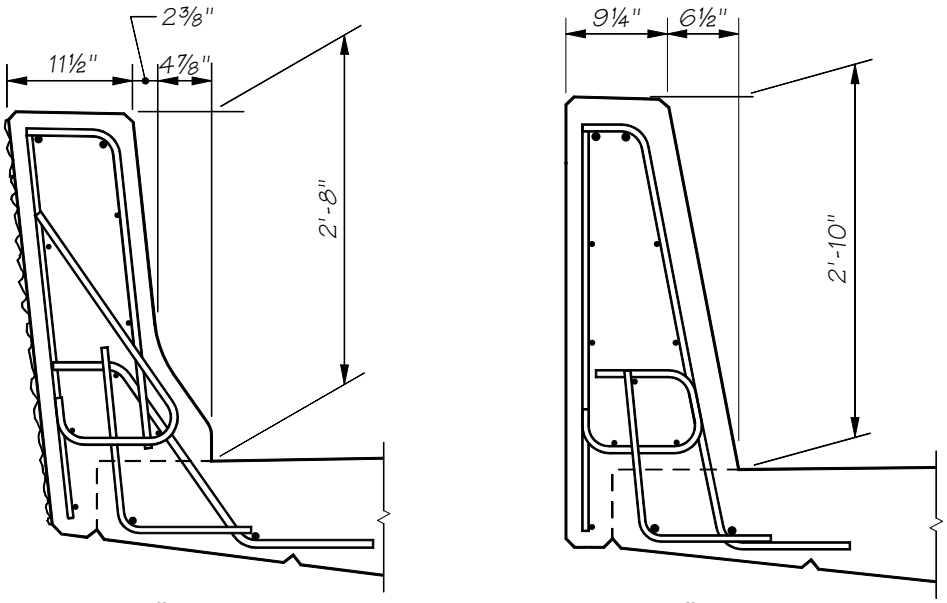

32″ F-Shape 34″ Single Slope

Pedestrian Barrier (TL-3)

This crash tested rail system offers a simple to build concrete alternative to the New Jersey and F-Shape configurations. This system was crash tested under both NCHRP 230 and 350. Since the traffic face geometry is better for pedestrians and bicyclists, WSDOT uses this system primarily in conjunction with a sidewalk. This barrier height will require the use of a Bridge Railing Type Pedestrian railing to meet fall protection requirements. For complete details, see Bridge Standard Drawing 10.2-A4.

The Pedestrian Barrier has been reduced from a TL-4 barrier to a TL-3 barrier due to its height of 34" being less than adequate to contain the design vehicle when compared to MASH criteria. The intent is to design this barrier as a TL-4 barrier, even though its classification does not meet TL-4 due to the height. On projects which have a minimum of 5' of raised sidewalk from the barrier face to traffic or a TL-4 barrier protecting the Pedestrian Barrier from traffic, it is permissible to use this barrier for new construction as a TL-3. For instances absent a TL-4 barrier or sidewalk as described, a unique barrier design with a minimum overall height of 36" is required to meet the TL-4 criteria. It is permissible and accepted for use within Washington State to use a custom designed Pedestrian barrier for TL-4 use.

10.2.3.E Oregon 3-Tube Curb Mounted Traffic Barrier (TL-4)

This is another crash tested traffic barrier that offers a lightweight, see-through option. This system was successfully crash tested under Mash 2016 for TL-4 conditions. When using this barrier, it is appropriate to use ODOT's transition details. A rigid thrie beam guardrail transition is required at the bridge ends, either directly connected to the three tube or through use of a concrete end block. For details, see the Oregon Bridge and Structure website at www.oregon.gov/ODOT/HWY/ENGSERVICES/Pages/bridge_drawings.aspx.

Figure 10.2.3-3

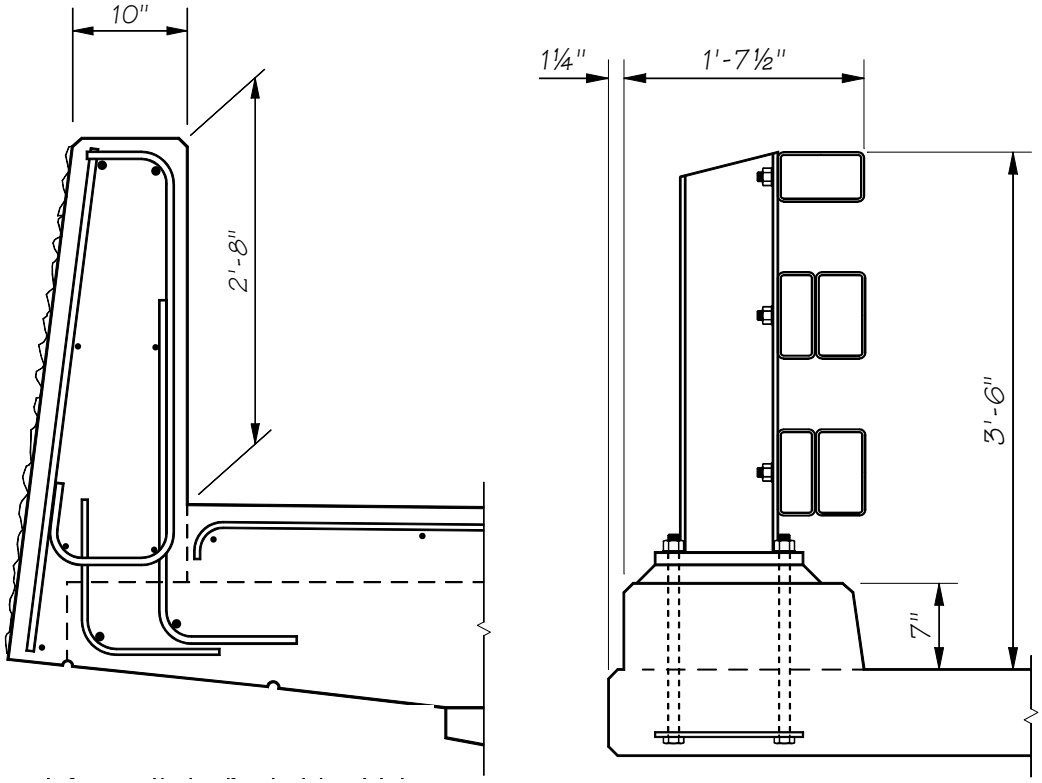

32" Vertical Oregon 3 Tube

10.2.3.F Traffic Barrier – 42″ F-Shape (TL-4 and TL-5)

This barrier is very similar to the 32″ F-shape concrete barrier in that the slope of the front surface is the same except for height. For complete details, see Bridge Standard Drawing 10.2-A5.

10.2.3.G Traffic Barrier – 42″ Single Slope (TL-4 and TL-5)

This option offers a simple to build alternative to the Shape F configuration. For complete details see Bridge Standard Drawing 10.2-A6 and 10.2-A7.

Figure 10.2.3-4

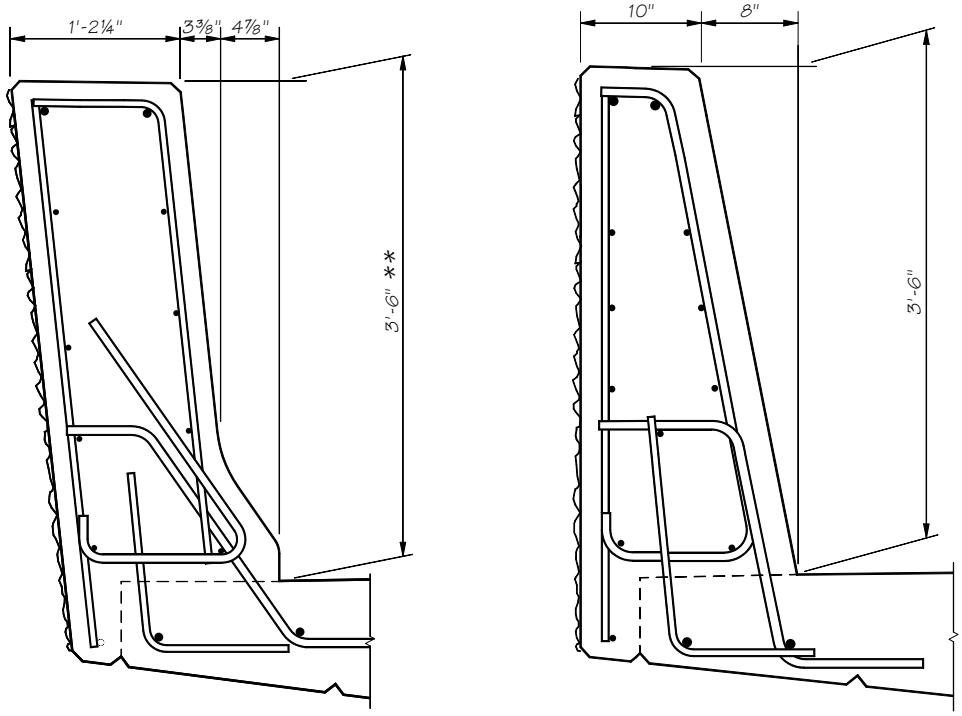

42″ F-Shape **42″ Single Slope**

10.2.4 Design Criteria

10.2.4.A Design Values

AASHTO LRFD Appendix A13 shall be used to design bridge traffic barriers and their supporting elements (i.e. the deck).

Concrete traffic barriers shall be designed using yield line analysis as described in AASHTO LRFD A13.3.1. The impact loads on traffic barriers shall be applied at the height specified for intended Test Levels in accordance to the AASHTO LRFD Table A13.2-1 "*Design Forces for Traffic Railing*". WSDOT Standard F Shape, Single Slope, and Pedestrian barriers meet these requirements.

Deck overhangs supporting traffic barriers shall be designed in accordance with AASHTO LRFD A13.4. For concrete traffic barriers in Design Case 1, AASHTO requires M_S, the deck overhang flexural resistance, to be greater than M_c of the concrete traffic barrier base. This requirement is consistent with yield line analysis (see AASHTO LRFD CA13.3.1), but results in over conservative deck overhang designs.

In order to prevent this unnecessary overdesign of the deck overhang, the nominal traffic barrier resistance to transverse load R_W (AASHTO LRFD A13.3.1) transferred from the traffic barrier to deck overhang shall not exceed 120 percent of the design force F_t (AASHTO LFRD Table A13.2-1) required for a traffic barrier. The deck overhang shall be designed in accordance with the requirements of AASHTO LRFD A13.4.2 to provide a flexural resistance M_s, acting coincident with the tensile force T. At the inside face of the barrier M_s may be taken as:

for an interior barrier segment–$M_s = \frac{R_w \cdot H_e}{L_C + 2 \cdot H}$

and for an end barrier segment–$M_s = \frac{R_w \cdot H_e}{L_C + H}$

However, M_s need not be taken greater than M_c at the base. T shall be taken as:

for an interior barrier segment–$T = \frac{R_w}{L_C + 2 \cdot H}$

and for an end barrier segment–$T = \frac{R_w}{L_C + H}$

The end segment requirement may be waived if continuity between adjacent barriers is provided.

When an HMA overlay is required for initial construction, increase the weight for Shape F traffic barrier. See Section 10.2.4.C for details.

10.2.4.B Geometry

The traffic face geometry is part of the crash test and shall not be modified. Contact the WSDOT Bridge and Structure Office Bridge Rail Specialist for further guidance.

Thickening of the traffic barrier is permissible for architectural reasons. Concrete clear cover must meet minimum concrete cover requirements but can be increased to accommodate rustication grooves or patterns.

10.2.4.C Standard Detail Sheet Modifications

When designing and detailing a bridge traffic barrier on a superelevated bridge deck the following guidelines shall be used:

- For bridge decks with a superelevation of 8 percent or less, the traffic barriers (and the median barrier, if any) shall be oriented perpendicular to the bridge deck.
- For bridge decks with a superelevation of more than 8 percent, the traffic barrier on the low side of the bridge (and median barrier, if any) shall be oriented perpendicular to an 8 percent superelevated bridge deck. For this situation, the traffic barrier on the high side of the bridge shall be oriented perpendicular to the bridge deck.

The standard detail sheets are generic and may need to be modified for each project. The permissible modifications are:

- Removal of the electrical conduit, junction box, and deflection fitting details.
- Removal of design notes.
- If the traffic barrier does not continue on to a wall, remove W1 and W2 rebar references.
- Removal of the non-applicable guardrail end connection details and verbiage.
- If guardrail is attached to the traffic barrier, use either the thrie beam end section "Design F" detail or the w-beam end section "Design F" detail. If the traffic barrier continues off the bridge, approach slab, or wall, remove the following:
- Guardrail details from all sheets.
- Conduit end flare detail.
- Modified end section detail and R1A or R2A rebar details from all sheets.
- End section bevel.
- Increase the 3″ toe dimension of the Shape F traffic barriers up to 6″ to accommodate HMA overlays.

10.2.4.D Miscellaneous Design Information

- Show the back of pavement seat in the "Plan – Traffic Barrier" detail.
- At roadway expansion joints, show traffic barrier joints normal to centerline except as shown on sheets Appendix 9.1-A1-1 and 9.1-A2-1.
- When an overlay is required, the 2′-8″ minimum dimension shown in the "Typical Section – Traffic Barrier" shall be referenced to the top of the overlay.
- When bridge lighting is part of the contract, include the lighting bracket anchorage detail sheet.
- Approximate quantities for the traffic barrier sheets are:

Barrier Type	Concrete Weight (lb/ft)	Steel Weight (lb/ft)
32″ F-shape (3″ toe)	460	18.6
32″ F-shape (6″ toe)	510	19.1
34″ Single Slope	490	16.1
42″ F-shape (3″ toe)	710	25.8
42″ F-shape (6″ toe)	765	28.4
42″ Single Slope	670	22.9
32″ Pedestrian	640*	14.7

Using concrete class 4000 with a unit weight of 155 lb/ft^3

*with 6″ sidewalk, will vary with sidewalk thickness

- Steel Reinforcement Bars:

  S_1 & S_2 or S_3 & S_4 and W_1 & W_2 bars (if used) shall be included in the Bar List. S_1, S_3, and W_1 bars shall be epoxy coated.

Table 10.2.4-1

Barrier Impact Design Forces on Traffic Barrier & Deck Overhang													
Parameters		Type F 32 in. (TL-4)		Single Slope 34 in. (TL-4)		Type F 42 in. (TL-4)		Single Slope 42 in. (TL-4)		Type F 42 in. (TL-5)		Single Slope 42 in. (TL-5)	
		Interior	End*	Interior	End*	Interior	End*	Interior	End*	Interior	End*	Interior	End*
Traffic Barrier Design	Average M_c (ft-kips/ft)	20.55	20.55	19.33	19.33	25.93	25.93	22.42	22.42	25.93	25.93	22.42	36.04
	M_c at Base (ft-kips/ft)	27.15	27.15	26.03	26.03	32.87	32.87	30.66	30.66	32.87	32.87	30.66	49.52
	M_w (ft-kips)	42.47	46.04	46.01	43.16	72.54	71.72	60.66	57.26	98.23	96.93	83.85	79.12
	L_c (ft)	8.62	4.76	9.30	4.81	10.77	5.32	10.63	5.21	15.05	9.39	14.99	8.87
	R_w (kips)	132.82	73.31	126.92	65.69	159.62	78.83	136.17	66.81	223.00	139.20	192.02	182.61
	F_t (kips)	54.00	54.00	54.00	54.00	54.00	54.00	54.00	54.00	124.00	124.00	124.00	124.00
Deck Overhang Design	$1.2*F_t$ (kips)	64.80	64.80	64.80	64.80	64.80	64.80	64.80	64.80	148.80	148.80	148.80	148.80
	Design R_w (kips)	64.80	64.80	64.80	64.80	64.80	64.80	64.80	64.80	148.80	139.20	148.80	148.80
	$R_w*H/(L_c+aH)$ (ft-kips/ft)**	12.39	23.28	12.27	24.01	9.72	19.59	9.80	19.83	23.62	37.79	23.69	42.11
	Design M_s (ft-kips/ft)	12.39	23.28	12.27	24.01	9.72	19.59	9.80	19.83	23.62	32.87	23.69	42.11
	Design T (kips/ft)	4.65	8.73	4.33	8.47	3.65	7.35	3.68	7.44	6.75	10.80	6.77	12.03
Deck to Barrier Reinforcement	A_s required (in^2/ft)	0.29	0.57	0.29	0.59	0.17	0.35	0.20	0.41	0.43	0.60	0.49	0.91
	A_s provided (in^2/ft)	0.41	0.62	0.41	0.62	0.41	0.62	0.41	0.62	0.59	0.89	0.59	0.97
	S_1 Bars	#5 @ 9 in	#5 @ 6 in	#5 @ 9 in	#5 @ 6 in	#5 @ 9 in	#5 @ 6 in	#5 @ 9 in	#5 @ 6 in	#6 @ 9 in	#6 @ 6 in	#6 @ 8 in	#6 @ 5.5 in

*Traffic barrier cross sectional dimensions and reinforcement used for calculation of end segment parameters are the same as interior segments (except TL-5 Single Slope 42 in. barrier where end section reinforcement differs from interior segments). Parameters for modified end segments shall be calculated per AASHTO-LRFD article A13.3, A13.4, and the WSDOT BDM.

**a = 1 for an end segment and 2 for an interior segment

Loads are based on vehicle impact only. For deck overhang design, the designer must also check other limit states per LRFD A13.4.1.

f_v = 60 ksi

f'_c = 4 ksi

10.3 At Grade Concrete Barriers

10.3.1 Differential Grade Concrete Barriers

The top of the differential grade concrete barrier shall have a minimum width of 6″. If a luminaire or sign is to be mounted on top of the differential grade concrete barrier, then the width shall be increased to accommodate the mounting plate and 6″ of clear distance on each side of the luminaire or sign pole. The transition flare rate shall follow the *Design Manual* M 22-01.

Differential grade concrete barriers are walls and barriers. All applicable limit states, design considerations, detailing, and constraints associated with walls and barriers shall apply. This includes, but is not limited to, provisions in AASHTO LRFD-BDS, the WSDOT GDM, and the WSDOT Design Manual for both walls and barriers.

Differential grade concrete barriers placed adjacent to a slope require implications of the slope to be incorporated into the design. The bench requirements for walls from the WSDOT GDM are applicable.

See Section 10.2 for how elements are accepted for use within Washington State. Blunt edges, snags, and pinch points are not appropriate to expose to traffic.

10.3.1.A Differential Grade Concrete Barriers

Concrete barriers at grade are sometimes required in median areas with different roadway elevations on each side. The standard Single Slope barrier can be used for a grade difference up to 10″ for a 2′-10″ safety shape and up to 6″ for a 3′-6″ safety shape. See Standard Plans C-70.10 and C-80.10 for details.

If the difference in grade elevations is 4′-0″ or less, then the concrete barrier shall be designed as a rigid system in accordance with AASHTO LRFD with the following requirements:

1. All applicable loads shall be applied in accordance to AASHTO LRFD Section 3. The structural capacity of the differential grade concrete barrier and supporting elements shall be designed for the required Test Level (TL) vehicle impact design forces in accordance with AASHTO LRFD Sections 5 and 13. Any section along the differential grade barrier and supporting elements shall not fail in shear, bending, or torsion when the barrier is subjected to the TL impact forces.
2. For soil loads without vehicle impact loads, the concrete barrier shall be designed as a retaining wall (barrier weight resists overturning and sliding). Passive soil resistance may be considered with concurrence by the geotechnical engineer.
3. Vehicle impact loads shall be applied on the side of the concrete barrier retaining soil if there is traffic on both sides. The vehicle impact loads shall be applied at the height specified for intended Test Levels in accordance to the AASHTO LRFD Section 13, Table A13.2-1 “*Design Forces for Traffic Railing* (32-inch for TL-4, and 42-inch for TL-5)”.

4. For soil loads with vehicle impact loads, the AASHTO LRFD Extreme Event loading for vehicular collision shall also be analyzed. Equivalent Static Load (ESL) per NCHRP Report 663 may be applied as the transverse vehicle impact load for evaluating sliding, bearing, and overturning only. For TL-4 barrier systems, the ESL shall be 10 kips and for TL-5, the ESL shall be 23 kips. The point of rotation for overturning shall be taken at the toe of barrier. Sliding resistance factor shall be 0.8 and overturning resistance factor shall be 0.5 (supersedes AASHTO 10.5.5.3.3).
5. The effective length of the concrete barrier required for stability shall be no more than 10 times the overall height, but not to exceed the length between barrier expansion joints (or one precast section). The barrier shall act as a rigid body behavior and shall be continuous throughout this length of barrier. Any coupling between adjacent barrier sections or friction that may exist between free edges of barrier and the surrounding soil shall be neglected.
6. A special impact analysis shall be performed at the barrier ends if the barrier terminates without being connected to a rigid object or dowelled to another barrier. Differential barrier deflection from barrier impact may cause a vehicle to "snag" on the undeflected barrier. The barrier depth may need to be increased at the end to prevent this deflection.
7. The differential grade traffic barrier shall have dummy joints at 8 to 12 foot centers based on project requirements.
8. Full depth expansion joints with shear dowels at the top will be required at intervals based on analysis but not to exceed a 120′-0″ maximum spacing.
9. Barrier bottom shall be embedded a minimum 6″ below roadway. Roadway subgrade and ballast shall be extended below whole width of differential grade barrier. When a single slope barrier is used, or other configurations absent a footing, the depth of embedment shall be equal or greater than the grade separation.

Traffic barriers supporting a soil height greater than 4'-0" shall be designed as reinforced concrete retaining walls with a traffic barrier at the top and a barrier shape at the cut face. For external stability, the full loadings for the Extreme Event Limit State from AASHTO LRFD-BDS, Section 13 are applicable. When using these AASHTO loadings the associative phi factors from AASHTO are applicable. These provisions do not waive any requirements for walls or barriers from other codes, manuals, or sources.

10.3.2 Traffic Barrier Moment Slab

10.3.2.A General

The guidelines provided herein are based on NCHRP Report 663 with the exception that a resistance factor of 0.5 shall be used to determine rotational resistance. This guideline is applicable for TL-4 and TL-5 barrier systems as defined in Section 13 of AASHTO LRFD *Bridge Design Specifications*. Traffic Barrier Moment Slabs shall employ a current concrete traffic barrier from BDM Section 10.2.3.

Figure 10.3.2-1 Global Stability of Barrier–Moment Slab System

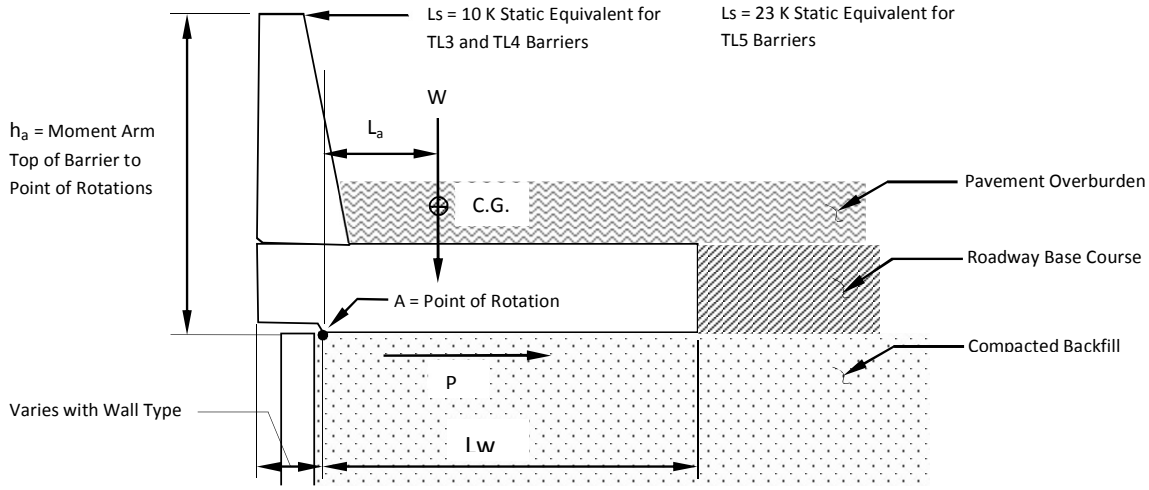

10.3.2.B Guidelines for Moment Slab Design

10.3.2.B.1 *Structural Capacity*

The structural capacity of the barrier and concrete moment slab shall be designed using impulse loads at appropriate Test Level (TL-4 and TL-5) applied to the top of the barrier in accordance with Sections 5 and 13 of AASHTO LRFD. Any section along the moment slab shall not fail in shear, bending, or torsion when the barrier is subjected to the design impact loads. The torsion capacity of the moment slab must be equal to or greater than the traffic barrier moment generated by the specified TL static equivalent of the vehicle impulse load.

The moment slab shall be designed as a deck supporting barrier in accordance to AASHTO LRFD A13.4.2 as modified by BDM Section 10.2.4.A. The moment slab reinforcement shall be designed to resist combined forces from the moment M_S (kip-ft/ft) and the tensile force T (kip/ft). M_S and T are determined from the lesser of the ultimate transverse resistance of barrier R_W (kip) and 120 percent of transverse vehicle impact force F_T (kip). M_S is not to be exceeded by the ultimate strength of barrier at its base M_C (kip-ft/ft).

10.3.2.B.2 *Global Stability*

Bearing stress, sliding, and overturning stability of the moment slab shall be based on an Equivalent Static Load (ESL) applied at the height specified for intended Test Levels in accordance to the AASHTO LRFD Section 13, Table A13.2-1 "*Design Forces for Traffic Railing*". For TL-4 barrier systems, the ESL shall be 10 kips. For TL-5 barrier systems, the ESL shall be 23 kips.

The Equivalent Static Load (ESL) is assumed to distribute over the length of continuous moment slab through rigid body behavior. Barrier shall also be continuous or have shear connections between barrier sections if precast throughout this length of moment slab. Any coupling between adjacent moment slabs or friction that may exist between free edges of the moment slab and the surrounding soil should be neglected.

10.3.2.B.3 *Minimum and Maximum Dimensions*

The minimum height of the traffic barrier portion of the moment slab shall be 42 inches above the finished roadway surface.

Moment slabs shall have a minimum width of 4.0 feet measured from the point of rotation to the heel of the slab and a minimum average depth of 0.83 feet. Moment slabs meeting these minimum requirements are assumed to provide rigid body behavior up to a length of 60 feet limited to the length between moment slab joints.

Rigid body behavior may be increased from 60 feet to a maximum of 120 feet if the torsional rigidity constant of the moment slab is proportionately increased and the reinforcing steel is designed to resist combined shear, moment, and torsion from TL static equivalent of the vehicle impulse loads.

For example: Rigid Body Length = (J'/J60)x(60 ft.) < 120 feet

The torsional rigidity constant for moment slabs shall be based on a solid rectangle using the following formula:

$$J = a \cdot b^3 \left[\frac{16}{3} - 3.36\left(\frac{b}{a}\right)\left(1 - \frac{b^4}{12a^4}\right)\right]$$

Where:

2a = total width of moment slab

2b = average depth of moment slab

For example:

Minimum Moment Slab Width = 48 inches: a = 24 inches

Minimum Moment Slab Average Depth = 10 inches: b = 5 inches J = J60 = 13,900 in^4

10.3.2.B.4 *Sliding of the Barrier*

The factored static resistance to sliding (ϕP) of the barrier-moment slab system along its base shall satisfy the following condition:

$$\phi P \geq \gamma Ls \quad (1)$$

Where:

Ls = Equivalent Static Load (10 kips for TL-3 or TL-4, 23 kips for TL-5)

ϕ = resistance factor (0.8) Supersedes AASHTO 10.5.5.3.3—Other Extreme Limit States

γ = load factor (1.0) for TL-3 and TL-4 [crash tested extreme event] load factor (1.2) for TL-5 [untested extreme event]

P = static resistance (kips)

P shall be calculated as: (2)

$$P = W \tan \phi_r$$

Where:

W = weight of the monolithic section of barrier and moment slab between joints or assumed length of rigid body behavior whichever is less, plus any material laying on top of the moment slab

ϕr = friction angle of the soil on the moment slab interface (°)

If the soil-moment slab interface is rough (e.g., cast in place), ϕ_r is equal to the friction angle of the soil ϕ_s. If the soil-moment slab interface is smooth (e.g., precast), tan ϕ_r shall be reduced accordingly (0.8 tan ϕ_s).

10.3.2.B.5 *Overturning of the Barrier*

The factored static moment resistance (ϕM) of the barrier-moment slab system to overturning shall satisfy the following condition:

$$\phi M \geq \gamma L_s h_a \quad (3)$$

Where:

- A = point of rotation, where the toe of the moment slab makes contact with compacted backfill adjacent to the fascia wall
- L_w = width of moment slab
- L_s = Equivalent Static Load (10 kips for TL-3 and TL-4) (23 kips for TL-5)
- φ = resistance factor (0.5) Supersedes AASHTO 10.5.5.3.3—Other Extreme Limit States and NCHRP Report 663
- γ = load factor (1.0) for TL-3 and TL-4 [crash tested extreme event]
  load factor (1.2) for TL-5 [untested extreme event]
- h_a = moment arm taken as the vertical distance from the point of impact due to the dynamic force (top of the barrier) to the point of rotation A
- M = static moment resistance (kips-ft)
  M shall be calculated as:
  $$M = W (L_a) \quad (4)$$
- W = weight of the monolithic section of barrier and moment slab between joints or assumed length of rigid body behavior whichever is less, plus any material laying on top of the moment slab
- L_a = horizontal distance from the center of gravity of the weight W to point of rotation A

The moment contribution due to any coupling between adjacent moment slabs, shear strength of the overburden soil, or friction which may exist between the backside of the moment slab and the surrounding soil shall be neglected.

10.3.2.C Guidelines for the Soil Reinforcement

Design of the soil reinforcement shall be in accordance with the *Geotechnical Design Manual* Chapter 15.

10.3.2.D Design of the Wall Panel

The wall panels shall be designed to resist the dynamic pressure distributions as defined in the *Geotechnical Design Manual* Chapter 15.

The wall panel shall have sufficient structural capacity to resist the maximum design rupture load for the wall reinforcement designed in accordance with the *Geotechnical Design Manual* Chapter 15.

The static load is not included because it is not located at the panel connection.

10.3.3 Precast Concrete Barrier

10.3.3.A Concrete Barrier Type F and Type 2

"Concrete Barrier Type F" (see Standard Plans C-60.10 or C-60.15) may be used on bridges for median applications or for temporary traffic control based on the following guidelines:

1. The use of this barrier is limited to TL-3 conditions based upon the height not being sufficient to contain the test vehicle for TL-4 conditions.
2. For temporary applications, no anchorage is required if there is 3 feet or greater slide distance between the back of the traffic barrier and an object and 3 feet or greater to the edge of the bridge deck or a severe drop off (see *Design Manual* M 22-01).
3. For permanent applications in the median, no anchorage will be required if there is a 6 foot or greater slide distance between the traffic barrier and the traffic lane.
4. For temporary applications, dual-sided barrier shall not be placed closer than 9 inches to the edge of a bridge deck or substantial drop-off and shall be anchored (see Standard Plans K-80.35).
5. When used to retain soil the provision of Section 10.3.1.A shall apply.
6. When transitioning to different height barrier off the structure roadside safety considerations shall be employed .

"Concrete Barrier Type 2" (see Standard Plan K-80.32) may be used on bridges for temporary traffic control or for partial replacements when matching existing barrier based on the following guidelines:

1. No anchorage is required if there is 3 feet or greater slide distance between the back of the traffic barrier and an object and 3 feet or greater to the edge of the bridge deck or a severe drop off (see *Design Manual* M 22-01).
2. For temporary applications, the dual-sided barrier shall not be placed closer than 9 inches to the edge of a bridge deck or substantial drop-off and shall be anchored (see Standard Plan K-80.35).
3. When used to retain soil the provisions of Section 10.3.1.A shall apply.

10.3.3.B Concrete Barrier Type F Narrow Base and Concrete Barrier Type 4

"Concrete Barrier Type F Narrow Base" (see the Standard Plan C-60.10), is not a free standing traffic barrier. This barrier shall be placed against a rigid vertical surface that is at least as tall as the traffic barrier. For temporary use this barrier may be anchored to the bridge deck. (Standard Plan K-80.37). The barrier shall not be placed closer than 6-inches to the edge of the bridge deck or a severe drop-off. The "Concrete Barrier Type F Narrow Base" is not designed for soil retention.

"Concrete Barrier Type 4" (see the Standard Plan K-80.34), is not a free standing traffic barrier and is only suitable in temporary conditions. This barrier shall be placed against a rigid vertical surface that is at least as tall as the traffic barrier. The barrier shall not be placed closer than 6-inches to the edge of the bridge deck or a severe drop-off. The "Concrete Barrier Type 4" is not designed for soil retention.

10.4 Bridge Traffic Barrier Rehabilitation

10.4.1 Policy

The bridge traffic barrier retrofit policy is: "to systematically improve or replace existing deficient rails within the limits of roadway resurfacing projects." This is accomplished by:

- Utilizing an approved crash tested rail system that is appropriate for the site or
- Designing a traffic barrier system to the strength requirements set forth by Section 2 of AASHTO *Standard Specifications for Highway Bridges, 17th edition*.

10.4.2 Guidelines

A strength and geometric review is required for all bridge rail rehabilitation projects. If the strength of the existing bridge rail is unable to resist a 10 kip barrier impact design load or has not been crash tested, then modifications or replacement will be required to improve its redirectional characteristics and strength. Bridges that have deficient bridge traffic barriers were designed to older codes.

The AASHTO LFD load of 10 kips shall be used in the retrofit of existing bridge traffic barrier systems constructed prior to the year 2000. No load less than 10 kips shall be applied, and the strength of the system shall be assessed in the pre and post retrofit condition. Any reduction in structural capacity of greater than or equal to 10% requires approval by the Design Unit Manager, or for designs done outside of the bridge office, approval by the State Bridge Design Engineer.

The use of the AASHTO LRFD criteria to design bridge traffic barrier rehabs will result in a bridge deck that has insufficient reinforcement to resist moment from a traffic barrier impact load and will increase the retrofit cost due to expensive deck modifications.

If the design of the bridge rehabilitation includes other bridge components that will be designed using AASHTO LRFD then the following minimum equivalent Extreme Event (CT) traffic barrier loading can be used limited to a maximum of <10% reduction:

Flexure = (1.3)*(1.67)*(10 kip) / (0.9) = 24.10 kip
Shear = (1.3)*(1.67)*(10 kip) / (0.85) = 25.54 kip

10.4.3 Design Criteria

Standard thrie beam guardrail post spacing is 6′-3″ except for the SL-1 Weak Post, which is at 8′-4″. Post spacing can be increased up to 10′-0″ if the thrie beam guardrail is nested (doubled up).

Gaps in the guardrail are not allowed because they produce snagging hazards. The exceptions to this are:

- Movable bridges at the expansion joints of the movable sections.
- At traffic gates and drop down net barriers.
- At stairways.

Design F guardrail end sections will be used at the approach and trailing end of these gaps.

For Bridge Traffic Barrier Rehabilitation the following information will be needed from the Region Design office:

- Bridge Site Data Rehabilitation Sheet – DOT Form 235-002A.
- Photos, preferably digital JPEG format.
- Layout with existing dimensions.
- Standard Plan thrie beam guardrail transitions (selected by Region Design office) to be used at each corner of the bridge (contact bridges and structures office for thrie beam height).
- Location of any existing utilities.
- Measurements of existing ACP to top of curb at the four corners, midpoints and the locations of minimum and maximum difference (five locations each side as a minimum).
- Diagram of the location of Type 3 anchors, if present, including a plan view with vertical and horizontal dimensions of the location of the Type 3 anchor connection relative to the intersecting point of the back of pavement seat with the curb line.
- The proposed overlay type, quantities of removal and placement.
- For timber bridges, the field measurement of the distance from the edge of bridge deck to the first and second stringer is required for mounting plate design.

Placement of the retrofit system will be determined from the *Design Manual* M 22-01. Exceptions to this are bridges with sidewalk strength problems, pedestrian access issues, or vehicle snagging problems.

10.4.4 WSDOT Bridge Inventory of Bridge Rails

Concrete balusters are deficient for current lateral load capacity requirements. They have approximately 3 kips of capacity whereas 10 kips is required.

The curb and rail base system/Type 7 bridge rail shall maintain a minimum 6 inch curb height. If this requirement is not met then the existing HMA will need to be removed to re-establish the 6 inch minimum curb height during the next paving cycle.

Figure 10.4.4-1

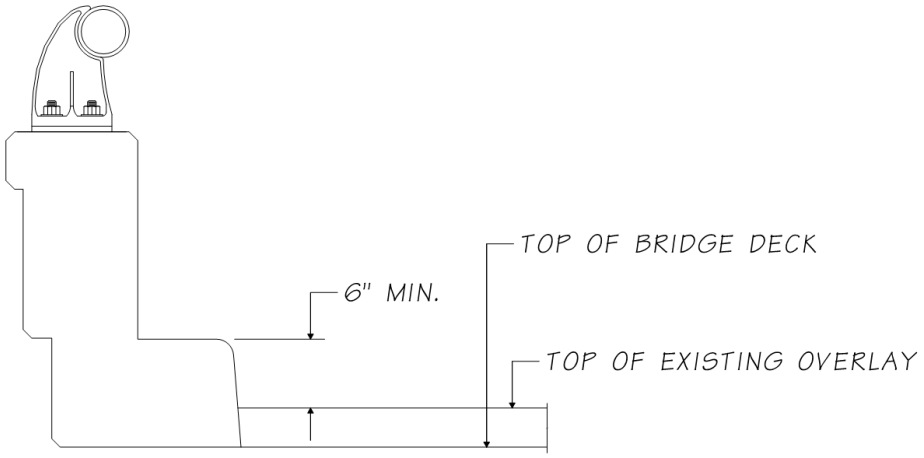

The combination high-base concrete parapet and metal rail may or may not be considered adequate depending upon the rail type. The metal rail Type R, S, and SB attached to the top of the high-base parapet are considered capable of resisting the required 5 kips of lateral load. Types 3, 1B, and 3A are considered inadequate. See the *Design Manual* M 22-01 for replacement criteria.

10.4.5 Available Retrofit Designs

10.4.5.A Washington Thrie Beam Retrofit of Concrete Balusters

This system consists of thrie beam guardrail stiffening of existing concrete baluster rails with timber blockouts. The Southwest Research Institute conducted full-scale crash tests of this retrofit in 1987. Results of the tests were satisfactory and complied with criteria for a Test Level 2 (TL-2) category in the Guide Specifications. For complete details see Bridge Standard Drawing 10.4-A1-1.

10.4.5.B Delaware Thrie Beam Guardrail

This crash tested rail system can be utilized at the top of a raised concrete sidewalk to separate pedestrian traffic from the vehicular traffic or can be mounted directly to the top of the concrete deck. For complete details see Thrie Beam Retrofit Concrete Curb in Appendix 10.4-A1-3.

10.4.5.C Concrete Parapet Retrofit

This is similar to the Delaware system. For complete details see Appendix 10.4-A1-2.

10.4.5.D SL-1 Weak Post

This bridge traffic barrier is a crash tested weak post rail system. It was developed by Southwest Research Institute and reported in NCHRP Report 239 for low-volume rural roadways with little accident history. This design has been utilized on a number of short concrete spans and timber bridges. A failure mechanism is built into this rail system such that upon a 10 kip applied impact load, the post will break away from the mounting bracket. The thrie beam guardrail will contain the vehicle by virtue of its ribbon strength. This system was designed for a Working Stress design force of 10 kip applied at 22 inches above the deck surface. To ensure minimal or no damage to the bridge deck and stringers, the breakaway connection may be modified for a lower impact load (2 kip minimum) with approval of the WSDOT State Bridge Design Engineer. The 2 kip minimum equivalent impact load is based on evaluation of the wood rail post strength tested in NCHRP Report 239. The appropriate guardrail approach transition shall be a Case 14 placement as shown on WSDOT Standard Plan C-2h. For complete details see Appendix 10.4-A1-4.

10.4.6 Available Replacement Designs

10.4.6.A Traffic Barrier – Shape F Retrofit

This is WSDOT's preferred replacement of deficient traffic barriers and parapets on high volume highways with a large truck percentage. All interstate highway bridges shall use this type of barrier unless special conditions apply. For complete details see Bridge Standard Drawing 10.4-A2.

10.5 Bridge Railing

10.5.1 Design

WSDOT pedestrian and bicycle/pedestrian railings are designed in accordance with Chapter 13 in AASHTO LRFD. AASHTO LRFD calls for a minimum of 42″ for bicycle railings whereas WSDOT requires a minimum height of 54″ on structures. The railings in Section 10.5.2 are not designed for vehicular impact loads assuming location is low speed, location is outside of Design Clear Zone as defined in the *Design Manual* Chapter 1600, or location has minimal safety consequence from collapse of railing. Railings for other locations shall be designed for vehicular impact loads in accordance with Chapter 13 and/or 15 in the AASHTO LRFD. Emergency and maintenance access shall be considered.

Pedestrian and bicycle railings shall be designed using a Live Load factor of 1.75.

Fall Protection railing shall meet the requirements of WAC 296-880 and as described in the *Design Manual* Chapter 1060.

Fall protection pipe railings shall be designed using a Live Load factor of 1.75.

Cable fence shall be designed to Allowable Stress Design

Baluster spacing shall be in accordance with AASHTO LRFD Chapter 13.8. The use of a more restrictive baluster spacing, such as IBC 1013.4, may be acceptable on a case-by-case basis. Request to use a more restrictive baluster spacing shall come from the WSDOT Project Engineer and shall be approved by the WSDOT State Bridge Design Engineer.

10.5.2 Railing Types

10.5.2.A Bridge Pedestrian Railing Type BP-10

This pedestrian railing is designed to sit on top of the 32″ and 34″ traffic barriers and to meet pedestrian and fall protection height requirements of 42″. For complete details see Bridge Standard Drawings 10.5-A1-1 and 2.

10.5.2.B Bridge Pedestrian Railing Type BP-22

These railings are designed to meet WSDOT's minimum bicycle height requirements of 54″, and sit on top of the 32″ and 34″ traffic barriers.

There are two versions—the BP and S-BP. The BP is the standard railing and is made out of aluminum. The S-BP is the steel version designed for use in rural areas because of aluminum theft. For complete details see Bridge Standard Drawings 10.5-A2-1 and 2 for Aluminum and 10.5-A3-1 and 2 for Steel.

10.5.2.C Bridge Pedestrian Railing Type BP-12

These railings are designed to meet WSDOT's minimum bicycle height requirements of 54″, and sit on top of the 42″ traffic barriers. For complete details see Bridge Standard Drawings 10.5-A6-1 and 2 for Aluminum and 10.5-A7-1 and 2 for Steel.

10.5.2.D Bridge Pedestrian Railing Type BP-54

This railing is designed to sit on top of a six-inch curb on the exterior of a bridge sidewalk. It meets the bicycle height requirements of 54″. For complete details see Standard Drawings 10.5-A4-1 and 2.

10.5.2.E Bridge Railing Type Snow Fence

This railing is designed to prevent large chunks of plowed snow from falling off the bridge on to traffic below. For complete details see Standard Drawings 10.5-A5-2 and 10.5-A5-3.

10.5.2.F Bridge Railing Type Chain Link Fence

This railing is designed to minimize the amount of objects falling off the bridge on to traffic below. The design loading shall include pedestrian loads and wind loads as specified in AASHTO LRFD. Consult with the HQ Design Office Railroad Liaison regarding review and acceptance of this detail near railroads. For complete details see Standard Drawing 10.5-A5-4.

10.6 Bridge Approach Slabs

Bridge approaches typically experience two types of settlement, global and local. Global settlement is consolidation of the deeper natural foundation soils. Local settlement is mainly compression of fill materials directly beneath the approach pavement due to construction. The combination of global and local settlements adjacent to the bridge end piers form the characteristic "bump" in the pavement at the bridge. The approach slab significantly reduces local settlement and will provide a transition to the long term roadway differential settlements. Generally, abutments with a deep foundation will have greater differential roadway settlements than spread footing foundations.

When Are Bridge Approach Slabs Required

Bridge approach slabs are required for the following structures:

- New bridges
- Widened bridges (full roadway width)
- Class 1 and Class 2 Buried Structures without a full depth roadway section (including HMA and CSBC) within 25 feet of each end of the buried structure

Bridge approach slabs may be omitted for Buried Structures with structural clear spans up to 30 ft when concurrence is reached between the Geotechnical Office, the Region Design Project Engineer Office, and the Bridge and Structures Office. Allowances for deleting bridge approach slabs are described in GDM Section 8.6.5.3.

Bridge approach slab lengths may be reduced for Buried Structures with structural clear spans up to 25 ft with approval from the State Geotechnical Engineer. The reduced bridge approach slab length shall not be less than the greater of the structural span length of the Buried Structure and 10 ft.

Precast bridge approach slabs shall be considered when accelerated construction is required. Modifications may be required to the basecourse to provide a smooth surface for the precast unit(s).

Standard Plan A-40.50 – The Standard Plan A-40.50 is available for the Local Agencies (or others) to use or reference in a contract. Bridge and Structures Office designs will provide detailed information in a customized approach slab Plan View and show the approach slab length on the Bridge Layout Sheet.

Bridge Runoff – Bridge runoff at the abutments shall be carried off and collected at least 10 feet beyond the bridge approach slab. Drainage structures such as grate inlets and catch basins shall be located in accordance with Standard Plan B-95.40 and the recommendations of the Hydraulics Branch.

Approach Pay Item –All costs in connection with constructing bridge approach slabs are included in the unit contract price per square yard for "Bridge Approach Slab." The pay item includes steel reinforcing bars, approach slab anchors, concrete, and compression seals.

10.6.1 Notes to Region for Preliminary Plan

All bridge preliminary plans shall show approach slabs at the ends of the bridges. In the Notes to Region in the first submittal of the Preliminary Plan to the Region, the designer shall ask the following questions:

1. Bridge approach slabs are shown for this bridge, and will be included in the Bridge PS&E. Do you concur?
2. The approach ends of the bridge approach slabs are shown normal to the survey line (a) with or (b) without steps (the designer shall propose one alternative). Do you concur?
3. Please indicate the pavement type for the approach roadway.

Depending on the type and number of other roadway features present at the bridge site (such as approach curbs and barriers, drainage structures, sidewalks, utilities and conduit pipes) or special construction requirements such as staged construction, other questions in the Notes to Region pertaining to the bridge approach slabs may be appropriate.

Special staging conditions exist when the abutment skew is greater than 30° and for wide roadway widths. This includes bridge widenings with (or without) existing bridge approach slabs. The preliminary plan should include details showing how these conditions are being addressed for the bridge approach slabs, and the designer shall include appropriate questions in the Notes to Region asking for concurrence with the proposed design.

10.6.2 Bridge Approach Slab Design Criteria

The standard bridge approach slab design is based on the following criteria:

1. The bridge approach slab is designed as a slab in accordance with AASHTO LRFD. (Strength Limit State, IM = 1.33, no skew).
2. The support at the roadway end is assumed to be a uniform soil reaction with a bearing length that is approximately ⅓ the length of the approach slab, or 25′/3 = 8′.
3. The Effective Span Length (S_{eff}), regardless of approach length, is assumed to be: 25′ approach – 8′ = 17′
4. Longitudinal reinforcing bars do not require modification for skewed approaches up to 30 degrees or for slab lengths greater than 25′.
5. The approach slab is designed with a 2″ concrete cover to the bottom reinforcing.

10.6.3 Bridge Approach Slab Detailing

The bridge approach slab and length along center line of project shall be shown in the Plan View of the Bridge Layout sheet. The Bridge Plans will also include approach slab information as shown in Bridge Standard Drawings 10.6-A1-1, 10.6-A1-2, and 10.6-A1-3. A minimum pavement seat width of 10 inches is required to support the bridge end of the bridge approach slab. The Approach Slab Plan sheets should be modified as appropriate to match the bridge site conditions. Approach slab Plan Views shall be customized for the specific project and all irrelevant details shall be removed.

Plan View dimensions shall define the plan area of the approach slab. The minimum dimension from the bridge is 25′. If there are skewed ends, then dimensions shall be provided for each side of the slab, or a skew angle and one side, in addition to the width. For slabs on a curve, the length along the project line and the width shall be shown.

Similar to Bridge Traffic Barrier detailing, approach slab steel detailing shall show size, spacing, and edge clearance. The number and total spaces can be determined by the contractor. If applicable, the traffic barrier AS1 and AS2 along with the extra top transverse bar in the slab shall be shown in the Plan View. AS1 bars shall be epoxy coated. Also, remember that the spacing of the AS1 bars decreases near joints. When the skew is greater than 20 degrees, then AP8 bars shall be rotated at the acute corners of the bridge approach slab.

Bending diagrams shall be shown for all custom reinforcement. All Bridge Approach Slab sheets will have the AP2 and AP7 bars. If there is a traffic barrier, then AP8, AS1, and AS2 bars shall be shown.

Longitudinal contraction joints are required on bridge approach slabs wider than 40 ft. or where steps are used on skewed alignments. Joints shall be located at lane lines or median barrier and in accordance with Bridge Standard Drawing 10.6-A1-2. If joints are to be sawcut, cutting shall occur as soon as possible after finishing the concrete, but after the concrete has set enough not to be torn or damaged by the blade. Additionally, cutting shall occur before shrinkage cracks start to appear, but no later than 48 hours after concrete placement. Early-entry sawing equipment is typically used within 4 hours after finishing the slab, and conventional sawing equipment is typically used between 4 and 12 hours, but may vary depending on the concrete mix design and environmental conditions.

Additional layout and details may be required to address special roadway features and construction requirements such as: roadway curbs and barriers, sidewalks, utilities and conduits and staging. This means, if sidewalks and interior barriers (such as traffic-pedestrian barriers) are present, special details will be required in the Bridge Plans to show how the sidewalks and interior barriers are connected to and constructed upon the bridge approach slab. If the bridge construction is staged, then the approach slabs will also require staged construction.

10.6.4 Skewed Bridge Approach Slabs

For all skewed abutments, the roadway end of the bridge approach slab shall be normal to the roadway centerline. The WSDOT State Bridge Design Engineer shall be consulted when approach slab skew is greater than 30 degrees. Skews greater than 20 degrees require analysis to verify the bottom mat reinforcement, and may require expansion joint modifications.

The roadway end of the approach may be stepped to reduce the size or to accommodate staging construction widths. A general rule of thumb is that if the approach slab area can be reduced by 50 SY or more, then the slab shall be stepped. At no point shall the roadway end of the approach slab be closer than 25′ to the bridge. These criteria apply to both new and existing bridge approach slabs. If stepped, the design shall provide the absolute minimum number of steps and the longitudinal construction joint shall be located on a lane line. See Figure 10.6.4-1 for clarification.

Figure 10.6.4-1 Skewed Approach

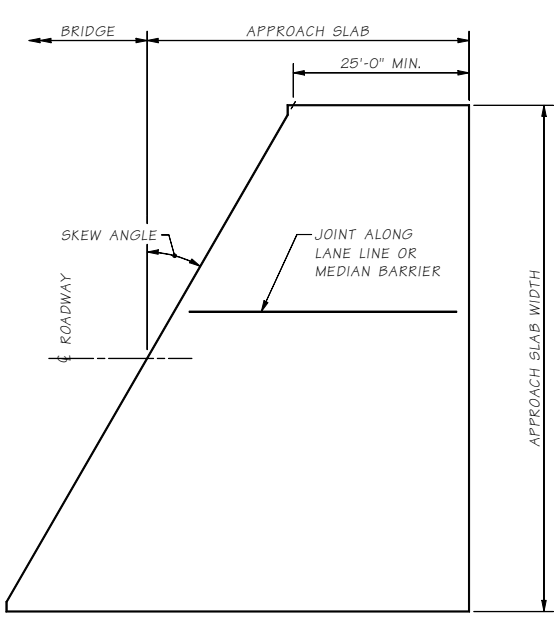

Skewed Approach ~ Typical

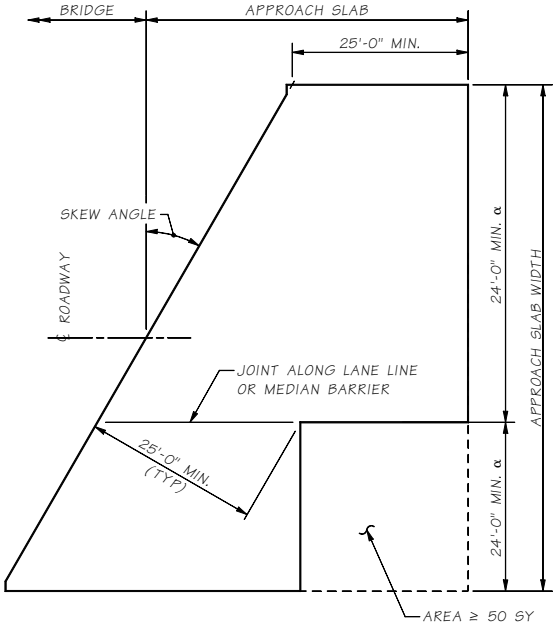

Skewed Approach ~ Stepped

α - DIMENSION MAY BE TWO LANE WIDTHS OR ONE LANE WIDTH PLUS THE SHOULDER WIDTH IF THE SHOULDER ≥ 8'-0".

In addition, for bridges with traffic barriers and skews greater than 20 degrees, the AP8 bars shall be rotated in the acute corners of the bridge approach slabs. Typical placement is shown in the flared corner steel detail, Figure 10.6.4-2.

Figure 10.6.4-2 Flared Corner Steel

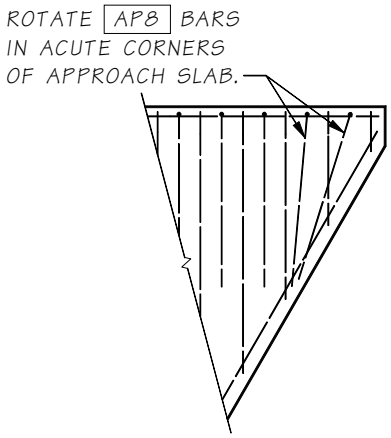

10.6.5 Approach Anchors and Expansion Joints

For semi-integral abutments or stub abutments, the joint design shall be checked to ensure the available movement of the standard joint is not exceeded. In general, the approach slab is assumed to be stationary and the joint gap is designed to vary with the bridge movement. Approach Slab Sheets 10-A1-3 and Standard Plan A-40.50 detail a typical 2½″ compression seal. For approach slabs with barrier, the compression seal shall extend into the barrier.

Approach slab anchors installed at bridge abutments shall be as shown in the Bridge Plans. For bridges with semi-integral type abutments, this can be accomplished by showing the approach slab anchors in the End Diaphragm or Pavement Seat details.

L Type Abutments – L type abutments do not require expansion joints or approach anchors because the abutment and bridge approach slab are both considered stationary. A pinned connection is preferred. The L type abutment anchor detail, as shown sign in Figure 10.6.5-1, shall be added to the abutment plan sheets. The pinned anchor for bridges with L type abutments shall be a #5 bar at one foot spacing, bent as shown, with 1′-0″ embedment into both the pier and the bridge approach slab. This bar shall be included in the bar list for the bridge substructure.

Figure 10.6.5-1 L Type Abutment Anchor Detail

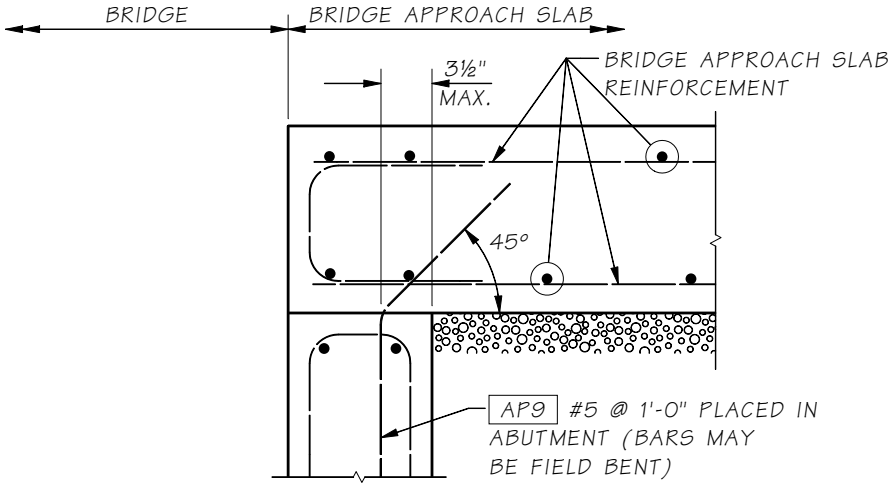

10.6.6 Bridge Approach Slab Addition or Retrofit to Existing Bridges

When bridge approach slabs are to be added or replaced on existing bridges, modification may be required to the pavement seats. Either the new bridge approach slab will be pinned to the existing pavement seat, or attached with approach anchors with a widened pavement seat. Pinning is a beneficial option when applicable as it reduces the construction cost and time.

The pinning option is only allowed on semi-integral abutments as a bridge approach slab addition or retrofit to an existing bridge. Figure 10.6.6-1 shows the pinning detail. As this detail eliminates the expansion joint between the bridge approach slab and the bridge, the maximum bridge superstructure length is limited to 150′. The WSDOT State Bridge Design Engineer may modify this requirement on a case by case basis. Additionally, if the roadway end of the bridge approach slab is adjacent to PCCP roadway, then the detail shown in Figure 10.6.6-2 applies. PCCP does not allow for as much movement as HMA and a joint is required to reduce the possibility of buckling.

When pinning is not applicable, then the bridge approach slab shall be attached to the bridge with approach anchors. If the existing pavement seat is less than 10 inches, the seat shall be modified to provide at least 10 inches of seat width. The WSDOT State Bridge Design Engineer may modify this requirement on a site-specific basis. Generic pavement seat repair details are shown in Appendix 10.6-A2-1 for a concrete repair and Appendix 10.6-A2-2 for a steel T-section repair. These sheets can be customized for the project and added to the Bridge Plans.

When a bridge approach slab is added to an existing bridge, the final grade of the bridge approach slab concrete shall match the existing grade of the concrete bridge deck, including bridges with asphalt pavement. The existing depth of asphalt on the bridge shall be shown in the Plans and an equal depth of asphalt placed on a new bridge approach slab. If the existing depth of asphalt is increased or decreased, the final grade shall also be shown on the Plans.

Figure 10.6.6-1 Pinned Approach Slab Detail

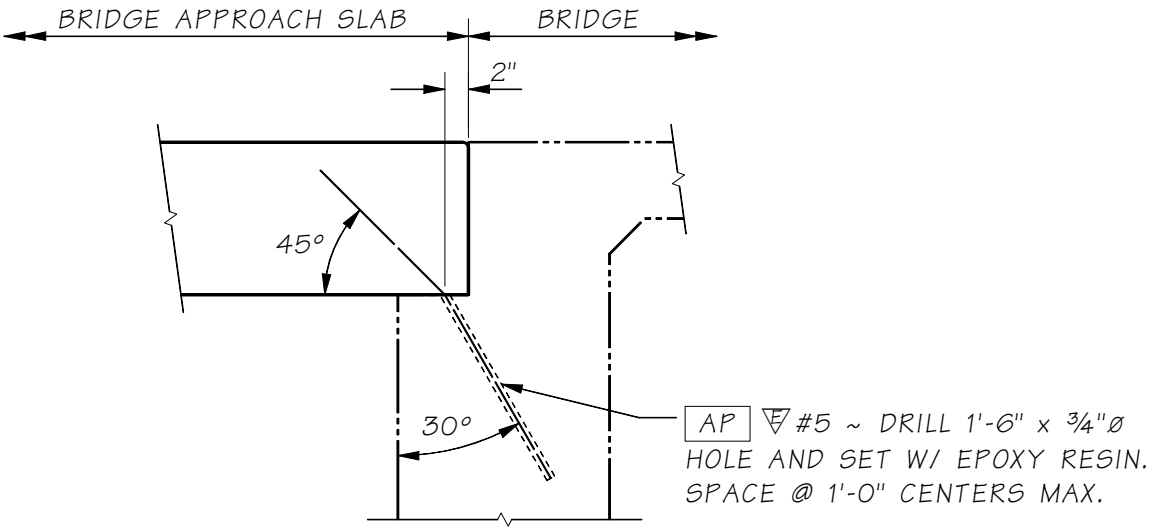

Figure 10.6.6-2 PCCP Roadway Dowel Bar Detail

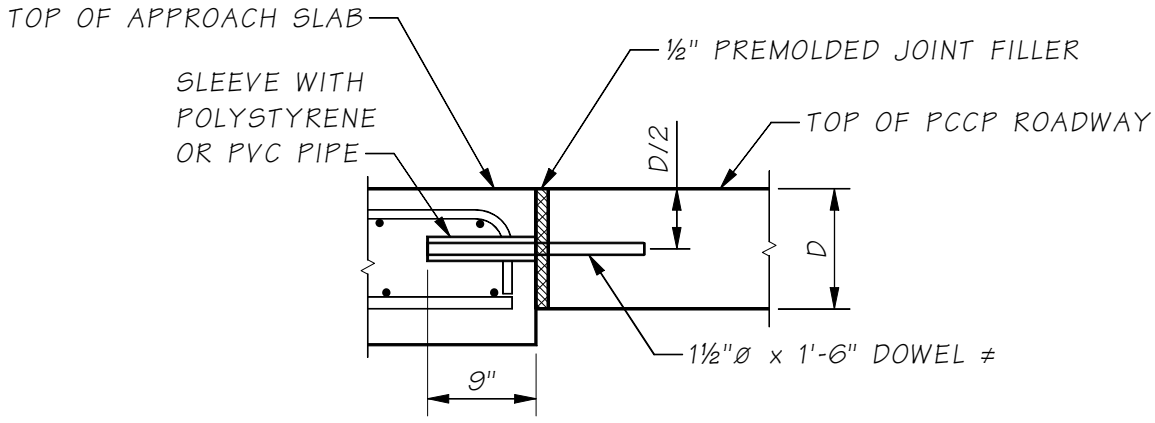

INSERT DOWELS PARALLEL TO CENTER LINE ALONG TRANSVERSE CONSTRUCTION JOINT.

≠ DRILL 1¾"ø HOLE AND SET WITH EPOXY RESIN IF PLACED INTO EXISTING PCCP ROADWAY.

10.6.7 Bridge Approach Slab Staging

Staging plans will most likely be required when adding or retrofitting approach slabs on existing bridges. The staging plans shall be a part of the bridge plans and shall be on their own sheet. Coordination with the Region is required to ensure agreement between the bridge staging sheet and the Region traffic control sheet. The longitudinal construction joints required for staging shall be located on lane lines. As there may not be enough room to allow for a lap splice in the bottom transverse bars, a mechanical splice option shall be added. If a lap splice is not feasible, then only the mechanical splice option shall be given. See Figure 10.6.6-3.

Figure 10.6.6-3 Alternate Longitudinal Joint Detail

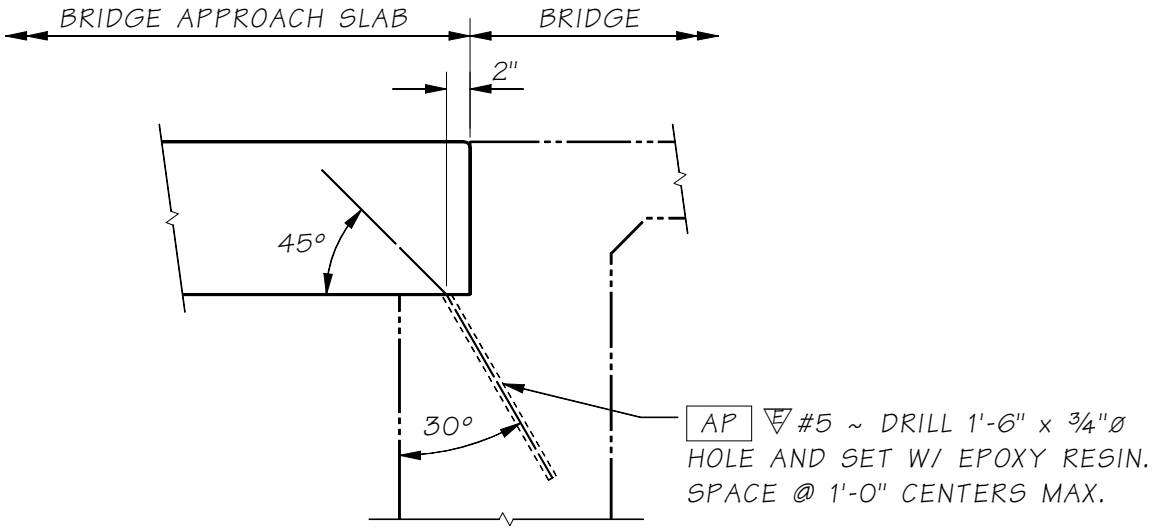

10.7 Traffic Barrier on Bridge Approach Slabs

Placing the traffic barrier on the bridge approach slab is beneficial for the following reasons.

- The bridge approach slab resists traffic impact loads and may reduce wing wall thickness
- Simplified construction and conduit placement
- Bridge runoff is diverted away from the abutment

Most bridges will have some long-term differential settlement between the approach roadway and the abutment. Therefore, a gap between the bridge approach slab and wing (or wall) shall be shown in the details. The minimum gap is twice the long-term settlement, or 2 inches as shown in Figure 10.7-1. A 3 inch gap is also acceptable.

When the traffic barrier is placed on the bridge approach slab, the following barrier guidelines apply.

- Barrier shall extend to the end of the bridge approach slab
- Conduit deflection or expansion fittings shall be called out at the joints
- Junction box locations shall start and end in the approach
- The top transverse reinforcing in the slab shall be sufficient to resist a traffic barrier impact load. A 6′-0″ (hooked) #6 epoxy coated bar shall be added to the approach slab as shown in Figure 10.7-1.

Figure 10.7-1

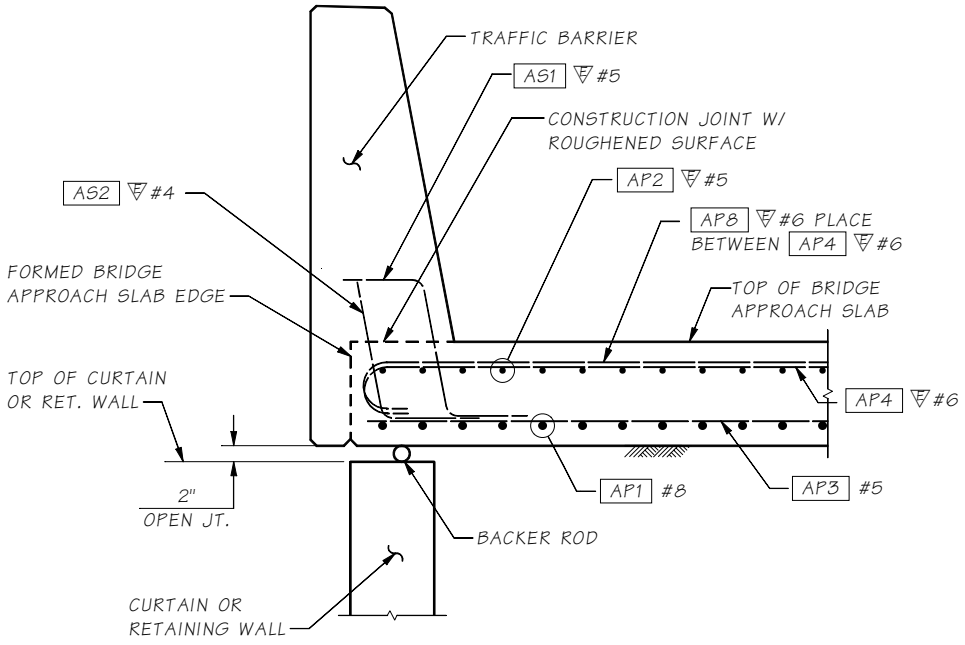

10.7.1 Bridge Approach Slab over Wing Walls, Cantilever Walls or Geosynthetic Walls

All walls that are cast-in-place below the bridge approach slab should continue the barrier soffit line to grade. This includes geosynthetic walls that have a cast-in-place fascia. Figure 10.7.1-1 shows a generic layout at an abutment. Note the sectional Gap Detail, Figure 10.7-1 applies.

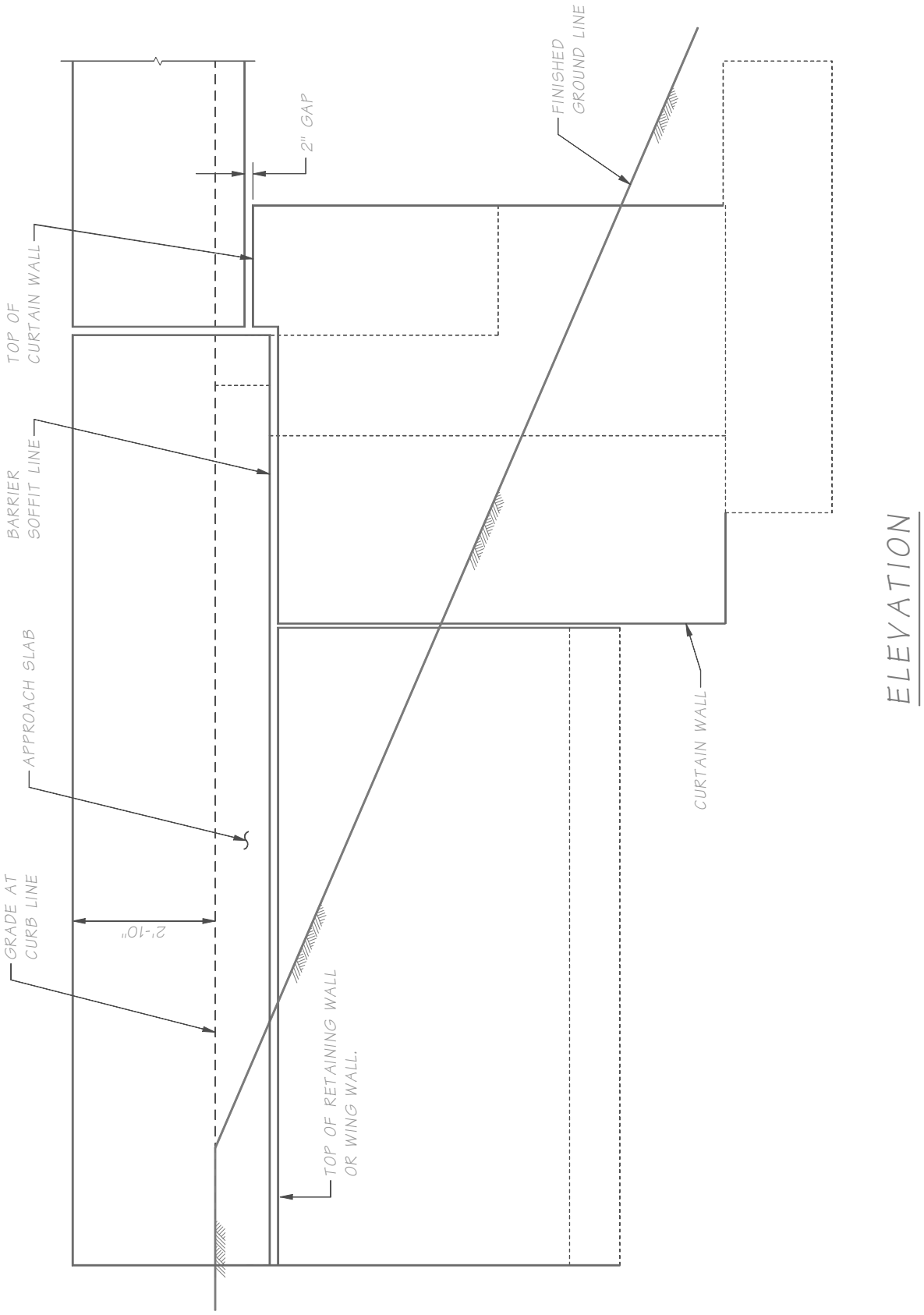

Figure 10.7.1-1

10.7.2 Bridge Approach Slab over SE Walls

The tops of structure earth (SE) walls are uneven and shall be covered with a fascia to provide a smooth soffit line. Usually SE walls extend well beyond the end of the approach slab and require a moment slab. Since SEW barrier is typically 5′-0″ deep from the top of the barrier, the soffit of the SEW barrier and bridge barrier do not match. The transition point for the soffit line shall be at the bridge expansion joint as shown in Figure 10.7.2-2. This requires an extended back side of the barrier at the approach slab to cover the uneven top of the SE wall.

Battered wall systems, such as block walls, use a thickened section of the curtain wall to hide some of the batter. The State Bridge and Structures Architect will provide dimensions for this transition when required.

Figure 10.7.2-1

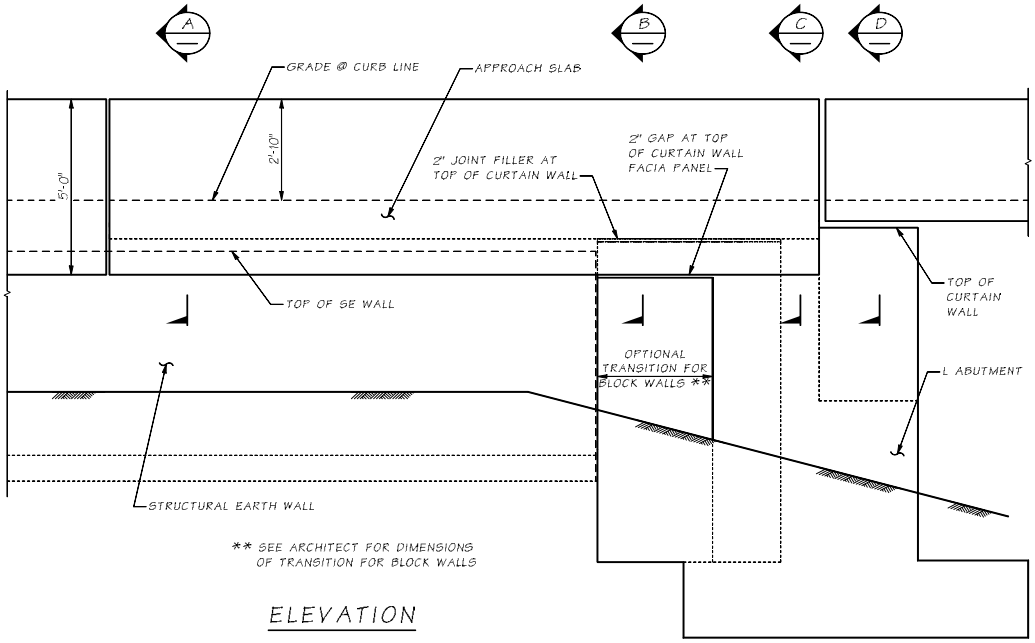

Figure 10.7.2-2

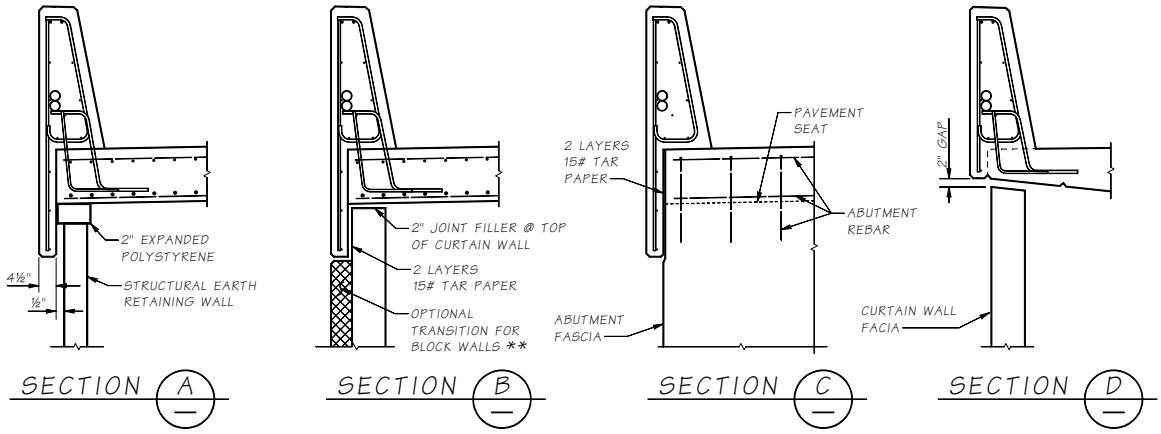

10.8 Utilities Installation on New and Existing Structures

10.8.1 General Concepts

The utilities included under this section are those described in *Standard Specifications* Section 6-01.10. The Bridge designer shall determine if the utility may be attached to the structure and the location. Bridge plans shall include all hardware specifications and details for the utility attachment as provided in any written correspondence with the utility and the utility agreement coordinated by the WSDOT Region Utility Engineer with the associated utility.

10.8.1.A Responsibilities of the Utility Company

The Region or utility company will initiate utility installations and provide design information. The utility company shall be responsible for calculating design stresses in the utility and design of the support system. Utility support design calculations with a State of Washington Professional Engineer stamp, signed and dated, shall be submitted to the Bridge and Structures Office for review. The following information shall be provided by the utility company and shown in the final Bridge Plans.

- Location of the utility outside the limits of the bridge structure
- Number of utilities, type, size, and weight (or Class) of utility lines
- Utility minimum bending radius for the conduit or pipeline specified

Utility General Notes and Design Criteria are stated in Form 224-047. See Figure 10.8.1-1. This form outlines most of the general information required by the utility company to design their attachments. The Bridge Office will generally provide the design for lightweight hanger systems, such as electrical conduits, attached to new structures.

10.8.1.B Confined Spaces

A confined space is any place having a limited means of exit that is subject to the accumulation of toxic or flammable contaminants or an oxygen deficient environment. Confined spaces include but are not limited to pontoons, box girder bridges, storage tanks, ventilation or exhaust ducts, utility vaults, tunnels, pipelines, and open-topped spaces more than 4 feet in depth such as pits, tubes, vaults, and vessels.

10.8.1.C Coating and Corrosion Protection

When the bridge is to receive pigmented sealer, consideration shall be given to painting any exposed utility lines and hangers to match the bridge. When a pigmented sealer is not required, steel utility conduits and hangers shall be painted or galvanized for corrosion protection. The special provisions shall specify cleaning and painting procedures.

Figure 10.8.1-1 General Notes and Design Criteria for Utility Installations to Existing Bridges WSDOT Form 224-047

Washington State Department of Transportation

General Notes and Design Criteria for Utility Installations to Existing Bridges

General Notes

All materials and workmanship shall be in accordance with the requirements of the state of Washington, Department of Transportation, Standard Specifications for Road, Bridge, and Municipal Construction, current edition. The utility conduits shall be labeled in accordance with Section 6-01.10.

All steel in utility supports, including fastenings and anchorages, shall be galvanized in accordance with AASHTO M-111 or M-232 (ASTM A-123 or A-153 respectively).

All utilities and utility support surfaces, including any galvanized utilities, shall be painted in accordance with Standard Specifications Section 6-07. The final coat shall match the bridge color.

Galvanized metal or aluminum utilities completely hidden from public view may be exempted from the above painting requirements.

Any painted surfaces damaged during construction shall be cleaned and painted as noted above.

Any paint splatters shall be removed from the bridge.

Appearance of the utility installation shall be given serious consideration in all cases. Where possible, the utility installation shall be hidden from public view.

The notes and criteria explained here are presented as a guide only. Each proposed utility installation shall be submitted to the Department of Transportation for approval on an individual basis. Compliance with these criteria does not assure approval, nor does variance from these criteria, for reasonable cause, necessarily exclude approval.

Design Criteria

1. Pipelines carrying volatile fluids through a bridge superstructure shall be designed by the utility company in accordance with WAC 480-93, Gas Companies - Safety, and Minimum Federal Safety Standard, Title 49 Code of Federal Regulations (CFR) Section part 192. WAC 468-34-210, Pipelines - Encasement, describes when casing is required for carrying volatile fluids across structures. Generally, casing is not required for pipelines conveying natural gas per the requirements of WAC 468-34-210. If casing is required, then WAC 468-34-210 and WAC 480-93-115 shall be followed.
2. Utilities shall not be attached above the bridge deck nor attached to railing or rail posts.
3. Utilities shall not extend below bottom of superstructure.
4. The utilities shall be provided with suitable expansion devices near bridge expansion joints and/or other locations as required to prevent temperature and other longitudinal forces from being transferred to bridge members.
5. Rigid conduit shall extend 10 feet (3 meters) minimum, beyond the end of the bridge abutment.
6. Utility supports shall be designed such that neither the conduit, the supports, nor the bridge members are overstressed by any loads imposed by the utility installation.
7. Utility locations and supports shall be designed so that a failure (rupture, etc.) will not result in damage to the bridge, the surrounding area, or be a hazard to traffic.
8. Conduit shall be rigid.

   (Items 1 through 8 may be cross-referenced with Bridge Design Manual, Utilities Section.)
9. Lag screws may be used for attaching brackets to wooden structures. All bolt holes shall meet the requirements of Sections 6-04.3(4) and 6-04.3(5) of the Washington State Department of Transportation Standard Specifications for Road, Bridge, and Municipal Construction, current edition.

Exhibit "_____"

Permit/Franchise _____

DOT Form 224-047
Revised 05/2018

Page _____ of _____

Figure 10.8.1-1 General Notes and Design Criteria for Utility Installations to Existing Bridges WSDOT Form 224-047 (continued)

10. Welding across main members will not be permitted. All welding must be approved.
11. Utilities shall be located to minimize bridge maintenance and bridge inspection problems.
12. Attach conduits or brackets to the concrete superstructure with resin bond anchors. Lag screws shall not be used for attachment to concrete.
13. Drilling through reinforcing steel will not be permitted. If steel is hit when drilling, the anchorage location must be moved and the abandoned hole filled with nonshrink grout conforming to the requirements of Section 9-20.3(2) and placement shall be as required in Section 6-02.3(20) of the Washington State Department of Transportation Standard Specifications for Road, Bridge, and Municipal Construction, current edition .
14. There shall be a minimum of 3 inches (80 millimeters) edge distance to the center line of bolt holes in concrete.
15. All utilities and utility supports shall be designed not only to support their dead load but to resist other forces from the utility (surge, etc.) and wind and earthquake forces. The utility company may be asked to submit one set of calculations to verify their design forces.
16. Drilling into prestressed concrete members for utility attachments shall not be allowed.
17. Water or sewer lines to be placed lower than adjacent bridge footings shall be encased if failure can cause undermining of the footing.

Exhibit "_____"

Permit/Franchise _____

DOT Form 224-047
Revised 05/2018

Page _____ of _____

10.8.2 Utility Design Criteria

All utilities shall be designed to resist Strength and Extreme Event Limits States. This includes and is not limited to dead load, expansion, surge, and earthquake forces. Designers shall review WSDOT Form 224-047 "*General Notes and Design Criteria for Utility Installations to Existing Bridges*" and the items in this section when designing a utility system or providing a review for an existing bridge attachment. See Figure 10.8.1-1 and Section 10.9 Utility Review Procedure for Installation on Existing Bridges.

The Bridge Engineer shall review the utility design to ensure the utility support system will carry all transverse and vertical loading. Loading will include (and is not limited to): dead load, temperature expansion, dynamic action (water hammer), and seismic inertial load. Positive resistance to loads shall be provided in all directions perpendicular to and along the length of the utility as required by the utility engineer.

Where possible, dynamic fluid action loads shall be resisted off the bridge. If these loads must be resisted on the bridge, the utility engineer shall be involved in the design of these supports. The utility engineer shall determine these design forces being applied to the bridge. Realize these forces can be generated in any pipe supporting moving fluids, which may include, but are not limited to: water, sewer, storm water, and fire suppression systems.

Where utilities are insulated, the insulation system shall be designed to allow the intended motion range of the hardware supporting the utility. This will prevent unanticipated stresses from being added to the hanger in the event the insulation binds up the hardware.

10.8.2.A Utility Location

Utilities shall be located, such that a support failure will not result in damage to the bridge, the surrounding area, or be a hazard to traffic. In most cases, the utility shall be installed between girders. Utilities and supports shall not extend below the bottom of the superstructure. Utilities shall be installed no lower than 1 foot 0 inches above the bottom of the girders. In some cases when appurtenances are required (such as air release valves), care shall be taken to provide adequate space. The utility installation shall be located so as to minimize the effect on the appearance of the structure. Utilities shall not be attached above the bridge deck nor attached to the railings or posts.

10.8.2.B Termination at the Bridge Ends

Utility conduit and encasements shall extend 10 feet minimum beyond the ends of the structure in order to reduce effects of embankment settlement on the utility and provide protection in case of future work involving excavation near the structure. This requirement shall be shown on the plans. Utilities off the bridge must be installed prior to paving of approaches. This should be stated in the Special Provisions.

10.8.2.C Utility Expansion

The utilities shall be designed with a suitable expansion system as required to prevent longitudinal forces from being transferred to bridge members.

Water mains generally remain a constant temperature and are anchored in the ground at the abutments. However, the bridge will move with temperature changes and seismic forces. Pipe support systems shall be designed to allow for the bridge movements. For short bridges, this generally means the bridge will move and the utility will not since it is anchored at the abutments. For long bridges that require pipe expansion joints, design shall carefully locate pipe expansion joints and the corresponding longitudinal load-carrying support.

Electrical conduits that use PVC shall have an expansion device for every 100 foot of pipe due to the higher coefficient of expansion. If more than two joints are specified, a cable or expansion limiting device is required to keep the ends from separating.

10.8.2.D Utility Blockouts

Blockouts shall be provided in all structural members that prohibit the passage of utilities, such as girder end diaphragms, pier crossbeams, and intermediate diaphragms. These blockouts shall be large enough to fit deflection fittings, and shall be parallel to the utility. For multiple utilities, a note shall be added to the plans that the deflection fittings shall be staggered such that no fitting is located adjacent to another, or the blockouts shall be designed to fit both fittings. Expansion fittings shall be staggered.

10.8.2.E Gas Lines or Volatile Fluids

Pipelines carrying volatile fluids through a bridge superstructure shall be designed by the utility company in accordance with WAC 480-93, Gas Companies—Safety, and Minimum Federal Safety Standard, Title 49 Code of Federal Regulations (CFR) Section part 192. WAC 468-34-210, Pipelines—Encasement, describes when casing is required for carrying volatile fluids across structures. Generally, casing is not required for pipelines conveying natural gas per the requirements of WAC 468-34-210. If casing is required, then WAC 468-34-210 and WAC 480-93-115 shall be followed.

10.8.2.F Water Lines

Transverse support or bracing shall be provided for all water lines to carry Strength and Extreme Event Lateral Loading. Fire control piping is a special case where unusual care must be taken to handle the inertial loads and associated deflections. The Utility Engineer shall be involved in the design of supports resisting dynamic action loads and deflections.

In box girders (closed cell), a rupture of a water line will generally flood a cell before emergency response can shut down the water main. This shall be designed for as an Extreme Event II load case, where the weight of water is a dead load (DC). Additional weep holes or open grating shall be considered to offset this Extreme Event (see Figure 10.8.3-1). Full length casing extending 10-feet beyond the end of the bridge approach slab shall be considered as an alternate to additional weep holes or open grating.

10.8.2.G Sewer Lines

Sewer lines shall meet the same design criteria as waterlines. Encasement pipe is required for sewer lines on bridges that cross over water or roads. See the utility agreement or the Hydraulic Section for types of sewer pipe material typically used.

10.8.2.H Electrical (Power and Communications)

Telephone, television cable, and power conduit shall be galvanized Rigid Metal Conduit (RGS) or Rigid Polyvinyl Chloride Conduit (PVC). Where such conduit is buried in concrete curbs or barriers or has continuous support, such support is considered to be adequate. Where hangers or brackets support conduit at intervals, the maximum distance between supports shall be 5 feet.

10.8.3 Box/Tub Girder Bridges

Utilities shall not be placed inside reinforced concrete box girders with less than 4 feet inside clear height and all precast prestressed concrete tub girders because reasonable access cannot be provided. Utilities shall be located between girders or under bridge deck soffit in these cases. Inspection lighting, access and ventilation shall always be provided in girder cells containing utilities. Refer to the concrete and steel chapters for additional details.

Special utilities (such as water or gas mains) in box girder bridges shall use concrete pedestals. This allows the utility to be placed, inspected, and tested before the deck is cast. See Figure 10.8.3-1. Concrete pedestals consist of concrete supports formed at suitable intervals and provided with some type of clamping device. Continuous supports shall be avoided due to the very high cost and additional dead load to the structure.

Figure 10.8.3-1 Concrete Utility Supports

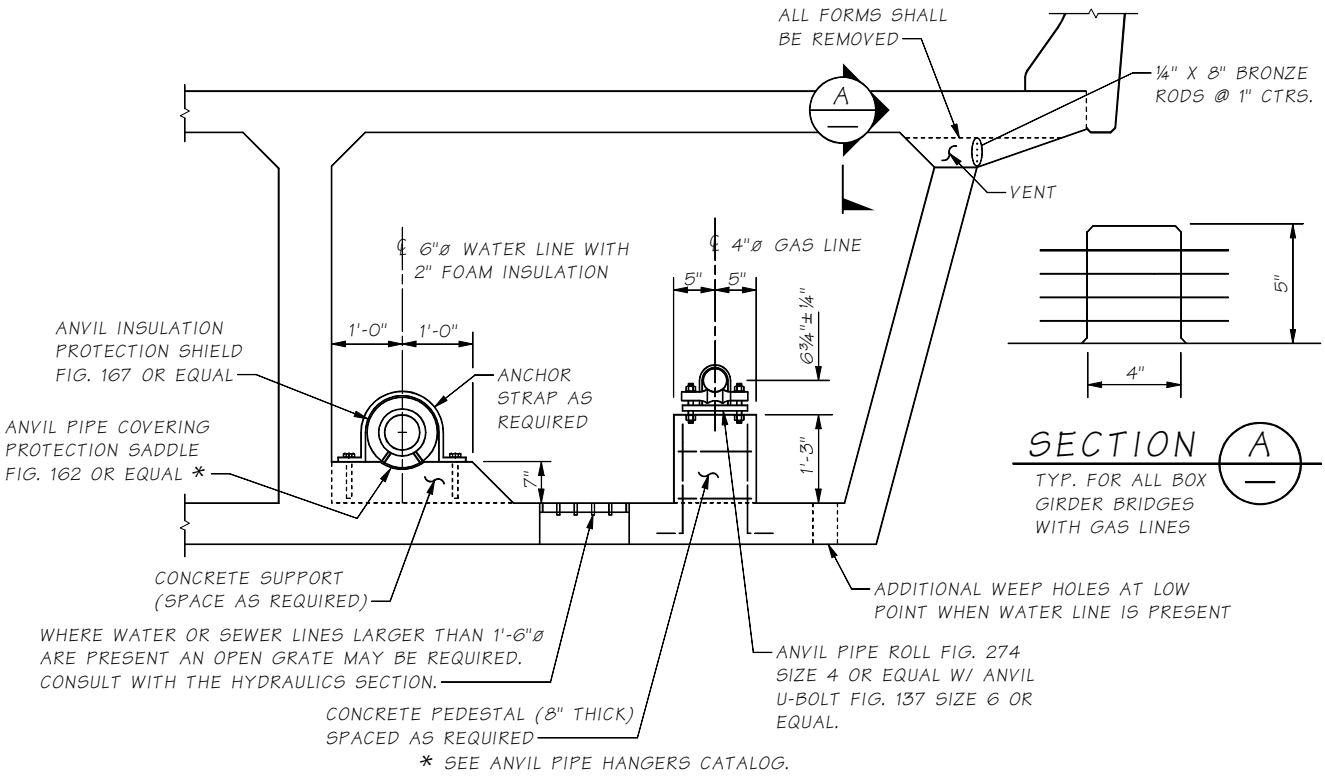

10.8.4 Traffic Barrier Conduit

All new bridge construction shall install two 2-inch galvanized Rigid Metal Conduit (RGS) or Rigid Polyvinyl Chloride Conduit (PVC) in the traffic barriers. These conduits generally carry wiring for Traffic Signals (TS) and Lighting (LT). Other wiring may be installed or the conduit may be used for future applications. PVC conduit may be used only in stationary-form barriers, and will connect to RGS using a PVC adaptor when exiting the barrier. RGS conduit may be used in stationary-form barriers, but it shall be used in slipform barriers.

Each conduit shall be stubbed-out into its own concrete junction box at each corner of the bridge. The Bridge Plans must show the placement of the conduits to clear the structure or any foreseeable obstructions.

The galvanized steel conduit shall be wrapped with corrosion resistant tape at least one foot inside and outside of the concrete structure, and this requirement shall be so stated on the plans. The corrosion resistant tape shall be 3M Scotch 50, Bishop 5, Nashua AVI 10, or approved equal. The usual location of the conduit throughout the remainder of the bridge should be in the traffic barrier.

Pull boxes shall be provided within the barrier for each conduit at each end of the bridge and at a maximum spacing of 200 feet. For fiber optics only, spacing shall not exceed 360 feet. The pull box size shall conform to the specifications of the National Electric Code or be a minimum of 8 inches by 8 inches by 18 inches to facilitate pulling of wires. Galvanized steel pull boxes (or junctions boxes) shall meet the specifications of the "NEMA Type 4X" standard for stationary-form barrier, shall meet the specifications of the "NEMA 3R" and be adjustable in depth for slip form barrier, and the NEMA junction box type shall be stated on the plans. Stainless steel pull boxes may be used as an option to the galvanized steel.

In the case of existing bridges, an area 2 feet in width shall be reserved for conduit beginning at a point either 4 feet or 6 feet outside the face of usable shoulder. The fastening for and location of attaching the conduit to the existing bridge shall be worked out on a job-by-job basis.

10.8.5 Conduit Types

All electrical conduits shall be galvanized Rigid Metal Conduit (RGS) or Rigid Polyvinyl Chloride Conduit (PVC).

Steel Pipe – All pipe and fittings shall be galvanized except for special uses.

PVC Pipe – PVC pipe may be used with suitable considerations for deflection, placement of expansion fittings, and of freezing water within the conduits. PVC pipe shall not be placed in concrete traffic barriers when the slip form method is used due to damage and pipe separation that often occurs during concrete placement.

10.8.6 Utility Supports

The following types of supports are generally used for various utilities. Selection of a particular support type shall be based on the needs of the installation and the best economy. All utility installations shall address temperature expansion in the design of the system or expansion devices.

Designs shall provide longitudinal and transverse support for loads from gravity, earthquakes, temperature, inertia, etc. It is especially important to provide transverse and longitudinal support for inserts that cannot resist moment.

Vertical supports shall be spaced at 5 foot maximum intervals for telephone and power conduits, and at a spacing to resist design loads for all other utilities. For Schedule 40 steel conduit, 4" or greater, support spacing may be increased to 8 feet maximum if the design loads permit.

Drilling into prestressed concrete members for utility attachment shall not be allowed.

10.8.6.A Concrete Embedment

This is the best structural support condition and offers maximum protection to the utility. Its cost may be high for larger conduit and the conduit cannot be replaced.

10.8.6.B Pipe Hangers

Utility lines shall be suspended by means of cast-in-place inserts, whenever possible. This is the most common type of support for utilities to be supported under the bridge deck. This allows the use of standard cast-in-place inserts and is very flexible in terms of expansion requirements. For heavy pipes over traffic (10″ water main or larger), a Safety Factor of 1.5 should be used to resist vertical loads for Strength Design. This is to avoid complete failure of the utility hanger system by failure of one hanger. Vertical inserts will not provide resistance to longitudinal forces. Longitudinal and transverse supports shall be provided for ITS conduits.

When ¾″ or ⅞″ diameter hanger rods are suspended from cast-in-place inserts, at least three of the following inserts shall be identified: Cooper B-Line B22-I Series, Unistrut 3200 Series, Powerstrut 349 Series, Halfen HT5506 or similar. The specific cast-in-place insert within each series shall be identified based on the required length of insert. The cast-in-place insert shall be at least 6″ long and hot dipped galvanized in accordance with AASHTO M 111 or ASTM F2329.

The insert shall not interfere with reinforcement in the bridge deck. The inserts shall be installed level longitudinally and transversely. When the superelevation of the roadway is not significant, a single, long insert may be used to support multiple hanger rods. When the superelevation becomes significant, a single insert may be used for each hanger.

Occasionally large diameter utilities require pipe rolls that only fit on 1″ diameter hanger rods. When 1″ diameter hanger rods are required, the Anvil Fig. 286 and Unistrut P3246 insert shall be used. The designer shall only specify this insert when absolutely necessary.

The Bridge Engineer shall verify that the cast-in-place insert has sufficient capacity to support the loads from the hanger rod.

Transverse supports may be provided by a second hanger extending from a girder or by a brace against the girder. Bridge Standard Drawings 10.8-A1-1 and 10.8-A1-2 depict typical utility support installations and placement at abutments and diaphragms. Transverse supports shall, at a minimum, be located at every other vertical support.

10.8.6.C Surface Mounting

Utilities to be installed on existing structures that cannot be located between girders may be mounted under the deck soffit. Utilities shall not be attached above the bridge deck nor attached to the railings or posts. Adhesive anchor shall be used and design in accordance with Section 10.10.

Bridge Standard Drawing 10.8-A1-3 shows typical mounting locations for concrete beam of box girder bridges. Anchors shall be located 3" minimum from the edge of deck or other concrete surfaces.

10.9 Review Procedure for Utility Installations on Existing Structures

Utility companies typically submit proposed attachments to WSDOT's structures to the Region's Utility offices, which in turn forward to the Bridge Preservation Office (BPO) for review. BPO is responsible for reviewing only those details pertaining to the bridge crossing such as attachment details or trenching details adjacent to bridge piers or abutments.

The Bridge Preservation Office reviews proposed utility attachments and either approves the attachment or returns for correction (RFC). A current file for most utility attachments is maintained in the Bridge Preservation Office. The turnaround time for reviewing the proposals should not exceed four weeks.

Utility attachments, which exert moments or large forces at the supports, shall be accompanied by at least one set of calculations from the utility company. Bridge attachments designed to resist surge forces shall always be accompanied by calculations. The connection details shall be designed to successfully transfer all forces to the bridge without causing overstress in the connections or to the bridge members to which they are attached. For large utilities, the bridge itself shall have adequate capacity to carry the utility without affecting the live load capacity.

The engineer may request calculations from the utility company for any attachment detail that may be questionable. All plans, details, and calculations shall be stamped, signed, and dated by a Professional Engineer licensed in the State of Washington. Additionally, for heavier utilities, such as waterlines or sewer lines, the engineer may request a load rating of the structure, which shall be stamped, signed, and dated by a licensed professional engineer in the state of Washington to follow the guidelines of Chapter 13. The ratings shall be based solely on the engineer of record calculations.

Guidelines for Utility Companies

Detailing guidelines for utility companies to follow when designing utility attachments are listed in WSDOT Form 224-047, "*General Notes and Design Criteria for Utility Installations to Existing Bridges*." See Figure 10.8.1-1. See Section 10.8 for other requirements, which include, but are not limited to: design of utility, material used, and spacing of supports.

Water lines and sewer lines installed within box girders shall have full length casing extending 10-feet beyond the end of the bridge approach slab. The casing shall be sufficient to prevent the flooding of a cell upon a utility line rupture.

Guidelines for Column Attachments

The following guidelines shall be followed for installing attachments to columns.

- Attachments on round columns may be either drilled and bolted or banded.
- Attachments on non-circular column shapes shall be drilled and bolted.
- Only percussion drilling methods shall be allowed on bridge columns, and only for small diameter resin bonded anchor installation (0.50″ diameter max.). Drilling will normally result in blind holes, and these holes shall be patched with material conforming to *Standard Specifications* Section 6-02.3(20).
- Drilling into prestressed or post-tensioned concrete elements is not permitted. Some WSDOT bridges utilize prestressed columns.

Any proposed conduit installation on a WSDOT bridge structure shall be reviewed and approved by the Risk Reduction Engineer in the Bridge Preservation Office. If the conduit installation originates via a change order, then the Headquarters Construction Office may provide approval, and shall inform the Risk Reduction Engineer of the decision.

10.9.1 Utility Review Checklist

This checklist applies to all proposed utility attachments to existing bridges.

1. Complete cursory check to become familiar with the proposal.
2. Determine location of existing utilities.
   A. Check Bridge Inspection Report for any existing utilities.
   B. Check Bridge Preservation's Office's utility file for any existing utility permits or franchises and possible as-built plans.
   C. Any existing utilities on the same side of the structure as the proposed utility shall be shown on the proposal.
3. Review the following:
   A. Layout that includes dimension, directions, SR number and bridge number.
   B. Adequate spacing of supports.
   C. Adequate strength of supports as attached to the bridge (calculations may be necessary).
   D. Maximum design pressure and regular operating pressure for pressure pipe systems.
   E. Adequate lateral bracing and thrust protection for pressure pipe systems.
   F. Does the utility obstruct maintenance or accessibility to key bridge components?
   G. Check location (elevation and plan view) of the utility with respect to pier footings or abutments. If trench limits encroach within the 45° envelope from the footing edge, consult the Materials Lab.
   H. Force mains or water flow systems may require encasement if they are in excavations below the bottom of a footing.
4. Write an email to the Region when "Approved" or "Approved as Noted". Stamp and date the plans using the same date as shown on the email.
5. Create a file folder on the server under Risk Reduction\Utilities with the bridge number. For each utility on the same structure, create a subfolder with utility name. Place approved plans and any other pertinent information used in the review process in the folder.

10.10 Anchors for Permanent Attachments

Cast-in-place concrete anchors are the preferred option for new construction in bridge applications.

The design procedure for cast-in-place and post-installed anchors shall be in accordance with LRFD-BDS 5.13. Adhesive and undercut anchors shall meet the assessment criteria in accordance with ACI 355.4 and ACI 355.2, respectively.

WSDOT allows conventional adhesive anchors systems (resin bonded anchors) and post installed undercut anchors for permanent attachments in many aspects of bridge design, including the permanent cyclical or sustained tension applications listed below.

- Bridge mounted sign brackets with a maximum cantilever length or total span of 10 feet.
- Light standards with a maximum cantilever length of 16 feet.
- Sign structures with a supporting, round or rectangular, post or beam with a maximum dimension of 8 inches.
- Retrofitted corbels for bridge approach slabs.
- Supporting utilities under bridges, including water pipes, electrical conduit and other utility piping systems.

Adhesive anchors shall not be used in monotube sign structure, sign structure truss, and mast arm type signal standard applications. Fast set resin bonding materials shall not be used for adhesive anchors.

For carbon steel undercut anchors, hot-dip galvanized components are preferred, but not currently available from suppliers. Undercut anchors with electroplated zinc coatings are not considered equivalent or better and shall not be used. Therefore, stainless steel undercut anchors are the preferred option.

Expansion anchors and mechanical anchors are not allowed for any permanent applications, except for specific connection details previously approved by the Bridge and Structures Office for precast concrete panel faced structural earth walls as low risk applications.

10.11 Drainage Design

Even though it is rare that poor drainage is directly responsible for a structural failure, it still must be a primary consideration in the design. Poor drainage can cause problems such as ponding on the roadway, erosion around abutments, and early deterioration of structural members. Collecting the runoff and transporting it away from the bridge can prevent most of the problems, thus reducing future maintenance and rehabilitations costs. Proper geometrics during the preliminary stage is essential in order to accomplish this. The Bridge and Structures Office recommends placing the bridge deck drainage off of the structure. All expansion joints shall be watertight.

10.11.1 Geometrics

Bridges shall have sufficient transverse and longitudinal slopes to allow the water to run quickly to the drains. A transverse slope of .02′/ft and longitudinal slope of 0.5 percent for minimum valves are required. Avoid placing sag vertical curves and superelevation crossovers on the structure that could result in hydroplaning conditions or, in cold climates, sheets of ice from melting snow. The use of unsymmetrical vertical curves may assist the designer in shifting the low point off the structure.

10.11.2 Hydrology

Contact the Hydraulic Branch for hydraulic design requirements.

10.11.3 On Bridge Systems

Drains shall only be placed on bridge structures when required. Coordinate with the Hydraulics designer for the drainage needs associated with bridge decks and to determine the type of drain required (preferably Neenah).

10.11.4 Construction

See *Standard Specifications* Section 6-02.3(10)D5 for construction requirements including gutter texture. Gutters shall have an untextured finish (steel trowel).

10.12 Bridge Security

10.12.1 General

Security based bridge design and its direct correlation to modern social issues is addressed in this section. Criminal activity, illegal encampments, graffiti, hindrance to economic development and public eyesore create unwanted expensive. They also pose public health concerns and safety hazards for State Maintenance and Operations practices. The issue exists in urban areas as well as rural and recreational locales.

Bridges are dominant structures in landscapes. They are held to a higher standard of design due to their influence on communities, where economic and social settings are affected by their quality. Initial project cost savings may quickly be overshadowed by increased externalized costs. These externalized costs are born by local municipalities and businesses as well as other departments within WSDOT.

WSDOT bridge inspectors are required to inspect all bridges at least once every 24 months. The presence of the illegal encampments, as well as garbage, hypodermic needles, and feces often makes it impossible to do a close, hands-on inspection of the abutments and bearings of bridges. The Bridge Preservation Office has requested that maintenance clean up transient camps when it becomes difficult or impossible to do an adequate inspection of the bridges. Campfires set by the homeless have also caused damage to bridges.

Bridge Maintenance Crews also face the same difficulty when they need to do repair work on bridges in the urban area. Clean up requires (per law) posting the bridge seventy-two hours prior to any work. Material picked up is tagged, bagged, and stored for retrieval. Often the offenders are back the next day.

10.12.2 Design

Design is determined on a case by case basis using two strategies. These strategies are universally accepted best practices. The first, Crime Prevention through Environmental Design (CPTED), is a multi-disciplinary approach to deterring criminal behavior.

The second, Context Sensitive Design (CSS), is also multi-disciplinary and focuses on project development methods. Multi-disciplinary teams consist of engineers and architects but may include law enforcement, local businesses, social service providers, and psychologists.

1. CPTED principals are based upon the theory that the proper design and effective use of the built environment can reduce crime, reduce the fear of crime, and improve the quality of life. Built environment implementations of CPTED seek to dissuade offenders from committing crimes by manipulating the built environment in which those crimes proceed from or occur. The six main concepts are territoriality, surveillance, access control, image/maintenance, activity support and target hardening. Applying all of these strategies is key when preventing crime in any neighborhood or right-of-way.

Natural surveillance and access control strategies limit the opportunity for crime. Territorial reinforcement promotes social control through a variety of measures. These may include enhanced aesthetics or public art. Image/maintenance and activity support provide the community with reassurance and the ability to stop crime by themselves. Target hardening strategies may involve fencing or concrete enclosures or they may include all techniques to resolve crime or chronic trespass into one final step.

2. WSDOT implements FHWA's CSS design development principles through Executive Order E 1028. The CSS methods require designers to consider the physical, economic, and social setting of a project. Stakeholder's interests are to be accounted for; including area residents and business owners.

10.12.3 Design Criteria

New bridges need to address design for the environment by basic criteria:

- Slopes under bridges need to be steep; around a 1:1 slope, and hardened with something like solid concrete so that flat areas cannot be carved into the hillside. Flat areas under bridge superstructures attract inappropriate uses and should be omitted.
- Illegal urban campers have been known to build shelters between the concrete girders. Abutment walls need to be high enough that they deny access to the superstructure elements. When it is not feasible to design for deterrence the sites need to be hardened with fencing buried several feet into the soil or with solid concrete walls. See Figures 14.2.3a and 14.2.3b for high security fence and concrete wall examples.
- Regular chain link is easy cut, therefore stouter material needs to be specified.
- Landscape design should coordinate with region or headquarters landscape architects. Areas need to be visible to law enforcement.

'High security' proprietary fence designs may be employed, or unique case-by-case custom designs may be required. Where required, coordinate with the State Bridge and Structures Architect.

10.13 Temporary Bridges

10.13.1 General

Temporary bridges are defined as bridges that are in service for 5 years or less. Any bridge that is expected to be in service for more than five years shall be designed using the requirements for permanent structures. These requirements apply to all temporary bridges regardless of the delivery contracting methods.

The approaches to the temporary bridge, including but not limited to, slopes, reinforced slopes, and retaining walls, shall be designed in accordance with the WSDOT *Geotechnical Design Manual* M 46-03.

10.13.2 Design

10.13.2.A One To Two Construction Season Temporary Bridges

Temporary bridges that will be used for one to two construction seasons shall be designed in accordance with the GSP in the Contract special provisions and shall be designed by the Contractor.

Bridges of this type shall be shown on the Bridge Preliminary Plan and shall include the minimum required length and minimum roadway width including shoulders.

Temporary bridges on 30,000 or greater ADT routes may be required to be designed as a long term, three to five season temporary bridge, as stated below.

10.13.2.B Three To Five Construction Season Temporary Bridges

Temporary bridges of this category shall be designed in accordance with the requirements of the current editions of:

LRFD-BDS and interims LRFD-SGS
WSDOT *Bridge Design Manual* M 23-50, including all design memorandums
WSDOT *Geotechnical Design Manual* M 46-03

10.13.2.B.1 *Design Requirements*

The design of the temporary bridge shall not include an additional future overlay of 25 pound per square foot.

Except for project specific conditions for lack of a practical freight route detour, the live loading of the temporary bridge may be reduced to 75-percent of the HL-93 loading, consistent with the Temporary Bridge General Special Provision. If it is determined during design that there is no practical detour route available for freight traffic impacted by this 75-percent HL-93 live load restriction, then the temporary bridge live load shall be specified as 100-percent of the HL-93 loading, and this project specific live load shall be specified in the General Notes in the Plans. Determination of practical detour routes shall be coordinated with the Region Project Engineer.

10.13.2.B.2 *Seismic Design Requirements*

The seismic design of temporary bridges shall be in accordance with the requirements of the current edition of LRFD-SGS, except the design response spectra shall be reduced by a factor not greater than 2.5.

The minimum support length provisions shall apply to all temporary bridges.

The Seismic Design Category (SDC) of the temporary bridge shall be obtained on the basis of the reduced/modified response spectrum except that a temporary bridge classified in SDC B, C, or D based on the unreduced spectrum cannot be reclassified to SDC A based on the reduced/modified spectrum.

10.13.2.B.3 *Deck Design Requirements*

Traffic barriers for temporary bridges shall be designed in accordance with the requirements of the current edition of LRFD-BDS, but not less than TL-3 collision load requirements. The TL demand may be adjusted on a case-by-case basis for vehicle size and speed per LRFD-BDS Tables 13.7.2-1 and 2.

The fall restraint specifications of WAC 296-155-24615 Section 2a requiring minimum vertical height of thirty-nine inches for traffic barriers shall be considered for temporary bridges.

Concrete bridge deck thickness may be reduced to 7 inches for concrete superstructure, and to 7½ inches for steel superstructures.

Epoxy coating requirement for bridge deck reinforcement may be waived for temporary bridges with 2 inch min cover for the top mat of reinforcement.

The driving surface of the temporary bridge shall be durable, skid resistant deck, with an initial skid number of at least 35 and maintaining a skid number of 26 minimum, in accordance with AASHTO T 242. The Contractor shall maintain the temporary bridge, including the driving surface, for the life of the temporary bridge in the project.

10.13.2.B.4 *Superstructure Design Requirements*

A 3 inch minimum HMA overlay could be used for temporary bridges made of adjacent precast concrete members.

Steel temporary bridges need not be painted.

Fatigue need not be checked for temporary bridges with steel superstructure.

All welding, repair welding, and welding inspection, of steel components of the temporary bridge shall conform to the *Standard Specifications* Section 6-03.3(25) and 6-03.3(25)A requirements specified for steel bridges.

Allowable tensile stress for precast-prestressed concrete girders under service limit state load combinations per LRFD-BDS Article 5.9.4.2.2 may be used in lieu of those specified in Section 5.2.1C.

10.13.2.B.5 *Foundation Design Requirements*

Pile types such as precast, prestressed concrete piles, steel H piles, timber piles, micropiles and steel pipe piles may be used for temporary bridges.

Soldier pile wall with treated timber lagging may be used for temporary bridges.

10.13.3 NBI Requirements

Temporary or re-commissioned bridges used as a detour and in-service longer the 90 days shall receive full National Bridge Inspection Standards (all SI&A data; ex., NBIS inspection, load ratings and scour evaluation). All SI&A data shall be submitted to the Washington State NBI data base within 90 days of opening to vehicle traffic. An "open" bridge is defined as a bridge that is near substantial completion with general highway traffic accessing/operating on the bridge in a configuration that is the final planned configuration.

Phased construction stages, if carrying traffic for 90 days or longer shall fall into these criteria.

Bridges open less than 90 days will need regular "safety" type inspections to ensure the safe operation of traffic on the bridge.

Contracts are to clearly identify the owner and who is responsible for all of this NBIS criteria.

Load ratings for legal trucks and special hauling vehicles are required for temporary and bridges constructed in phased stages. The minimum rating factor shall not be less than 1.0.

10.13.4 Submittal Requirements

The Contractor shall submit drawings and copies of supporting design calculations of the temporary bridge to the Engineer for approval in accordance with *Standard Specifications* Section 6-01.9. The submittal shall include an erection plan and procedure in accordance with *Standard Specifications* Section 6-03.3(7)A.

Submittals for temporary bridges with total length of more than 200 ft shall be stamped and signed by a Washington State registered Structural Engineer (SE) in accordance with the requirements of WAC 196-23.

The Contractor shall construct the temporary bridge in accordance with the working drawings and erection plan as approved by the Engineer, environmental permit conditions specified in Section 1-07.5 as supplemented in the Special Provisions and as shown in the Plans, and in accordance with the details shown in the Plans.

10.14 Bridge Standard Drawings

Sign Structures

10.1-A1-1 Monotube Sign Bridge Layout (PDF 59KB) (DWG 63KB)
10.1-A1-2 Monotube Sign Bridge Details 1 (PDF 61KB) (DWG 64KB)
10.1-A1-3 Monotube Sign Bridge Details 2 (PDF 99KB) (DWG 80KB)

10.1-A2-1 Monotube Cantilever Layout (PDF 48KB) (DWG 33KB)
10.1-A2-2 Monotube Cantilever Details 1 (PDF 97KB) (DWG 76KB)
10.1-A2-3 Monotube Cantilever Details 2 (PDF 54KB) (DWG 45KB)

10.1-A3-1 Monotube Balanced Cantilever Layout Details (PDF 74KB) (DWG 68KB)
10.1-A3-2 Monotube Balanced Cantilever Details 1 (PDF 81KB) (DWG 74KB)
10.1-A3-3 Monotube Balanced Cantilever Details 2 (PDF 67KB) (DWG 56KB)

10.1-A4-1 Monotube Sign Structure Foundation Type 1, 1 of 2 (PDF 107KB) (DWG 81KB)
10.1-A4-2 Monotube Sign Structure Foundation Type 1, 2 of 2 (PDF 132KB) (DWG 100KB)
10.1-A4-3 Monotube Sign Structure Foundation Types 2 & 3 (PDF 85KB) (DWG 133KB)

10.1-A5-1 General Notes (PDF 104KB) (DWG 75KB)
10.1-A5-2 Monotube Sign Structures Common Details (PDF 108KB) (DWG 94KB)
10.1-A5-3 Monotube Sign Structure Single Slope Traffic Barrier Shape Cap (PDF 104KB) (DWG 75KB)

Bridge Mounted Sign Bracket

10.1-A6-1 Bridge Mounted Sign Bracket No. 1 - Layout (PDF 69KB) (DWG 97KB)
10.1-A6-2 Bridge Mounted Sign Bracket No. 1 - Geometry (PDF 69KB) (DWG 97KB)
10.1-A6-3 Bridge Mounted Sign Bracket Details 1 of 3 (PDF 116KB) (DWG 123KB)
10.1-A6-4 Bridge Mounted Sign Bracket Details 2 of 3 (PDF 109KB) (DWG 84KB)
10.1-A6-4a Bridge Mounted Sign Bracket Details 2 of 3 (PDF 75KB) (DWG 84KB)
10.1-A6-4b Bridge Mounted Sign Bracket Details 2 of 3 (PDF 92KB) (DWG 86KB)
10.1-A6-4c Bridge Mounted Sign Bracket Details 2 of 3 (PDF 99KB) (DWG 73KB)
10.1-A6-5 Bridge Mounted Sign Brackets (PDF 142KB) (DWG 214KB)

Traffic Barriers

10.2-A1-1 Shape F Traffic Barrier Detail 1 of 3 (PDF 86KB) (DWG 84KB)
10.2-A1-2 Shape F Traffic Barrier Detail 2 of 3 (PDF 80KB) (DWG 71KB)
10.2-A1-3 Shape F Traffic Barrier Detail 3 of 3 (PDF 92KB) (DWG 136KB)

10.2-A2-1 Shape F Traffic Barrier on Flat Slab Details 1 of 3 (PDF 137KB) (DWG 291KB)
10.2-A2-2 Shape F Traffic Barrier on Flat Slab Details 2 of 3 (PDF 129KB) (DWG 151KB)
10.2-A2-3 Shape F Traffic Barrier on Flat Slab Details 3 of 3 (PDF 157KB) (DWG 305KB)

10.2-A3-1 Single Slope Traffic Barrier Details 1 of 3 (PDF 92KB) (DWG 80KB)
10.2-A3-2 Single Slope Traffic Barrier Details 2 of 3 (PDF 86KB) (DWG 65KB)
10.2-A3-3 Single Slope Traffic Barrier Details 3 of 3 (PDF 94KB) (DWG 136KB)

10.2-A4-1 Pedestrian Barrier Details, 1 of 3 (PDF 91KB) (DWG 75KB)
10.2-A4-2 Pedestrian Barrier Details, 2 of 3 (PDF 75KB) (DWG 74KB)
10.2-A4-3 Pedestrian Barrier Details, 3 of 3 (PDF 91KB) (DWG 133KB)

10.2-A5-1A Traffic Barrier Shape F 42, TL4 1 of 3 (PDF 99KB) (DWG 97KB)
10.2-A5-1B Traffic Barrier Shape F 42, TL5 1 of 3 (PDF 99KB) (DWG 97KB)
10.2-A5-2 Traffic Barrier Shape F 42, 2 of 3 (PDF 95KB) (DWG 83KB)
10.2-A5-3 Traffic Barrier Shape F 42, 3 of 3 (PDF 94KB) (DWG 139KB)

10.2-A6-1A Traffic Barrier - Single Slope 42 TL4 1 of 3 (PDF 149KB) (DWG 215KB)
10.2-A6-1B Traffic Barrier - Single Slope 42 TL5 1 of 3 (PDF 89KB) (DWG 75KB)
10.2-A6-2A Traffic Barrier - Single Slope 42 2 of 3 (PDF 89KB) (DWG 66KB)
10.2-A6-3 Traffic Barrier - Single Slope 42 3 of 3 (PDF 95KB) (DWG 134KB)

Luminaire

10.2-A7-1 Luminaire on F Shape Traffic Barrier (PDF 169KB) (DWG 200KB)
10.2-A7-2 Luminaire on Single Slope Traffic Barrier (PDF 167KB) (DWG 470KB)

Rail Retrofits

10.4-A1-1 Thrie Beam Retrofit Concrete Baluster (PDF 67KB) (DWG 191KB)
10.4-A1-2 Thrie Beam Retrofit Concrete Railbase (PDF 56KB) (DWG 84KB)
10.4-A1-3 Thrie Beam Retrofit Concrete Curb (PDF 57KB) (DWG 250KB)
10.4-A1-4 WP Thrie Beam Retrofit SL1 - Details 1 of 2 (PDF 61KB) (DWG 75KB)
10.4-A1-5 WP Thrie Beam Retrofit SL1 - Details 2 of 2 (PDF 61KB) (DWG 78KB)

10.4-A2-1 TB Shape F Rehab - Details 1 of 3 (PDF 107KB) (DWG 100KB)
10.4-A2-2 TB Shape F Rehab - Details 2 of 3 (PDF 127KB) (DWG 157KB)
10.4-A2-3 TB Shape F Rehab - Details 3 of 3 (PDF 158KB) (DWG 172KB)

Railings

10.5-A1-1 Bridge Railing Type Pedestrian Details 1 of 2 (PDF 67KB) (DWG 58KB)
10.5-A1-2 Bridge Railing Type Pedestrian Details 2 of 2 (PDF 81KB) (DWG 75KB)

10.5-A2-1 Bridge Pedestrian Railing Type BP Details 1 of 2 (PDF 67KB) (DWG 60KB)
10.5-A2-2 Bridge Pedestrian Railing Type BP Details 2 of 2 (PDF 81KB) (DWG 75KB)

10.5-A3-1 Pedestrian Railing Type BP-Steel Details 1 of 2 (PDF 86KB) (DWG 106KB)
10.5-A3-2 Pedestrian Railing Type BP-Steel Details 2 of 2 (PDF 120KB) (DWG 157KB)

10.5-A4-1 Pedestrian Railing Details 1 of 2 (PDF 103KB) (DWG 126KB)
10.5-A4-2 Pedestrian Railing Details 2 of 2 (PDF 108KB) (DWG 121KB)

10.5-A5-2 Bridge Railing Type Snow Fence Details 1 of 2 (PDF 122KB) (DWG 64KB)
10.5-A5-3 Bridge Railing Type Snow Fence Details 2 of 2 (PDF 131KB) (DWG 63KB)
10.5-A5-4 Bridge Railing Type Chain Link Fence (PDF 97KB) (DWG 62KB)

10.5-A6-1 Bridge Railing Type BP-12 Details 1 of 2 (PDF 106KB) (DWG 53KB)
10.5-A6-2 Bridge Railing Type BP-12 Details 2 of 2 (PDF 104KB) (DWG 51KB)

10.5-A7-1 Bridge Railing Type S-BP-12 Details 1 of 2 (PDF 88KB) (DWG 43KB)
10.5-A7-2 Bridge Railing Type S-BP-12 Details 2 of 2 (PDF 119KB) (DWG 64KB)

Approach Slabs

10.6-A1-1 Approach Slab Detail 1 of 3 (PDF 125KB) (DWG 113KB)
10.6-A1-2 Approach Slab Detail 2 of 3 (PDF 72KB) (DWG 132KB)
10.6-A1-3 Approach Slab Detail 3 of 3 (PDF 147KB) (DWG 238KB)

10.6-A2-1 Concrete Pavement Seat Repair (PDF 98KB) (DWG 103KB)
10.6-A2-2 T-Section Pavement Seat Repair (PDF 97KB) (DWG 106KB)

Utility Hangers

10.8-A1-1 Utility Hanger Details for PS Concrete Girders (PDF 120KB) (DWG 192KB)
10.8-A1-2 Utility Hanger Details for Concrete Box (PDF 94KB) (DWG 150KB)

10.9-A1-1 Guide to Utility Hanger Details (PDF 97KB) (DWG 132KB)

Bridge Drains

10.11-A1-1 Bridge Drain Modification (PDF 72KB) (DWG 94KB)
10.11-A1-2 Bridge Drain Type 2 thru 5 (PDF 72KB) (DWG 94KB)

10.99 References

AASHTO Guide Specification for *LRFD Seismic Bridge Design*, 2nd Edition (2011), Washington DC.

AASHTO, 1st Edition (2015), Washington DC.

AASHTO *Standard Specifications for Highway Bridges*, 17th Edition (2002), Washington DC.

NCHRP Report 230, "Recommended Procedures for the Safety Performance Evaluation of Highway Appurtenances", Transportation Research Board, 1991, Washington DC.

NCHRP Report 350, "Recommended Procedures for the Safety Performance Evaluation of Highway Features", Transportation Research Board, 1993, Washington DC.

NCHRP Report 663, "Design of Roadside Barrier Systems Placed on MSE Retaining Walls", NCHRP Project 22-20, Transportation Research Board, 2010, Washington DC.

WSDOT *Design Manual* M 22-01

WSDOT *Geotechnical Design Manual* M 46-03

WSDOT *Standard Plans* M 21-01

WSDOT *Standard Specifications for Road, Bridge, and Municipal Construction* (*Standard Specifications*) M 41-10

WSDOT E 1028 *Context Sensitive Solutions Executive Order*

Newman, O. Defensible Space: Crime Prevention Through Urban Design. New York: Macmillan. 1972.

Jacobs, Jane. The Death and Life of Great American Cities. New York: Random House. 1961.

11.0 Detailing Practice 11-1

11.1 Standard Office Practices 11-1

11.1.1 General 11-1

11.1.1.A Purpose 11-1

11.1.1.B Planning 11-1

11.1.1.C Drawing Orientation and Layout Control 11-1

11.1.1.D Annotation 11-2

11.1.1.D.1 Text and Labeling 11-2

11.1.1.D.2 Dimensioning 11-3

11.1.1.D.3 Callouts (See Figure 11.1.1-D6 below) 11-4

11.1.1.D.4 Key Notes (See Figure 11.1.1-D7 below) 11-5

11.1.1.E Line Work 11-7

11.1.1.F Scale 11-8

11.1.1.G Graphic Symbols 11-8

11.1.1.H Structural Sections, Views and Details 11-9

11.1.1.I Revisions 11-10

11.1.1.J Title Block 11-11

11.1.1.K Reinforcement Detailing 11-12

11.1.2 Bridge Office Standard Drawings and Office Examples 11-14

11.1.2.A General 11-14

11.1.2.B Use of Standards 11-14

11.1.2.C Maintenance of Standard Drawings 11-14

11.1.3 Typical Plan Set and Sheets 11-15

11.1.3.A Plan Sheet Organization 11-15

11.1.3.B Sheet Types 11-16

11.1.3.C Sheet Contents 11-17

11.1.3.D Wall Structure Sheets and Detailing Practices 11-22

11.1.3.D.1 Layout 11-22

11.1.3.D.2 Developed Elevation 11-22

11.1.3.D.3 Details 11-23

11.1.4 Electronic Plan Sharing Policy 11-23

11.1.5 Structural Steel 11-24

11.1.5.A General 11-24

11.1.5.B Bars 11-24

11.1.5.C Plates 11-24

11.1.5.D Strips 11-24

11.1.5.E Labeling 11-24

11.1.6 Aluminum Section Designations 11-25

11.1.7 Abbreviations 11-26

11.1.7.A General 11-26

11.1.7.B List of abbreviations commonly used on bridge plan sheets: 11-26

11.2 Appendices 11-34
Appendix 11.2-A1 Dimensional Callout Example 11-35
Appendix 11.2-A2 Typical Details 11-36
Appendix 11.2-A3 Typical Section Callouts 11-37
Appendix 11.2-A4 Reinforcement Callout Examples 11-38

Chapter 11 Detailing Practice

11.0 Detailing Practice

The following is to provide basic information on drafting and the fundamentals of the Bridge and Structures Office drafting practices.

11.1 Standard Office Practices

11.1.1 General

11.1.1.A Purpose

- The purpose of these standards is to enable the Bridge and Structures Office to produce **consistent** and **effective** plan sheets that will have uniform appearance and information.
- Designers and detailers are responsible for ensuring that these criteria are implemented.
- Limited deviations from the standards listed in this chapter, unless otherwise noted, may be approved by the WSDOT State Bridge Design Engineer as a specific situation requires, so long as all possible attempts to maintain the standards are made prior to authorizing a deviation. All deviations must be approved by the WSDOT State Bridge Design Engineer.
- Definitions used in this chapter:
  - ***Should:*** Denotes when best practice dictates a standard is to be followed, but may be deviated from or omitted if necessary, as approved by the design engineer.
  - ***Shall:*** Denotes when a standard ***must*** be followed with no deviations or omissions allowed.

11.1.1.B Planning

- The designer and the structural detailer together coordinate the **scope** of the detailing work involved in each project. Time *should* be allotted for checking plans for accuracy and consistency with office practices.
- Similar bridge plans and details *should* be reviewed and kept as **examples** for maintaining consistent detailing practices. When available, these examples *should* not be older than three years. Care *shall* be taken to identify and update revisions in code or policy between the example set design date and current practice.

11.1.1.C Drawing Orientation and Layout Control

- **Standard format** for a bridge plan sheet is 34 inches × 22 inches with the bottom 2 inches used for title block and related information. The use of a sheet format that is 17 inches x 11 inches with the bottom 1 inch used for title block and related information is permitted so long as the final printed product maintains the same graphical standards as a 34 inch x 22 inch format plotted at half size. For the purposes of this manual, all sizes and dimensions referenced herein are in relation to the 34 inch x 22 inch format.

- **Contract plans** are printed, sealed, signed and submitted on 11″ × 17″ paper. This is accomplished by either plotting a 34 inch x 22 inch format at half size, or a 17 inch by 11 inch format at full size, depending on the sheet format that is used.
- **Drawings** *shall* be carefully organized so the intent of the drawing is easily understood.
  - **North arrow** *shall* be placed on layouts and footing/foundation layouts. The North arrow *should* be placed in the upper right corner of the sheet whenever possible.
  - **Related details** *shall* be grouped together in an orderly arrangement: lined up horizontally and vertically and drawn to the same scale.
  - Do not detail a bridge element in more than one location. If the element is changed there is a danger that only one of the details is updated.
  - Do not crowd the drawing with details.
  - The Plan view layout of structures and retaining walls *should* be oriented from left to right in the direction of increasing state route mileposts. For layouts of existing bridges undergoing widening, expansion joint or thrie beam retrofit, or other structural modification, this orientation requirement may result in the bridge layout being opposite from what is shown in the original plans. In such cases, the designer and detailer *shall* review the Bridge Preservation Office inspection records for the bridge, and the bridge layout orientation and pier identification *should* be laid out to be consistent with the Bridge Preservation Office inspection records.

11.1.1.D Annotation

11.1.1.D.1 *Text and Labeling*

- **Lettering** *shall* be upper case only, slanted at approximately 68 degrees. General text is to be approximately ⅛″ high.
- **Text** *shall* be **oriented** so as to be read from the **bottom** or **right edge** of the sheet.
- A primary **Legend** *shall* be placed on the first sheet of the plan set. At a minimum this will include a Section Callout reference, followed by a Detail Callout reference, and finally a Key Note reference. Anything else that is to be added to the legend *shall* be placed after these 3 items. See Figure 11.1.1-D1.

Figure 11.1.1-D1 Primary Legend

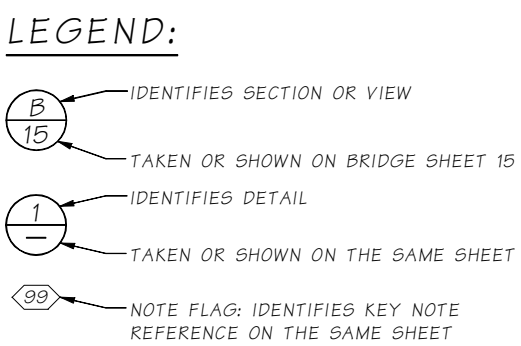

- **Detail titles** *shall* be a similar font as general text, about twice as high and of a heavier weight. Underline all titles with a single line having the same weight as the lettering. Additional detail information or description *shall* be the standard text style and placed directly under the title. See Figure 11.1.1-D2.

Figure 11.1.1-D2 Detail Titles



- **Primary Line Labels** for alignments, highway or bridge centerline (in plan view), creeks/rivers, and under-crossings *shall* be aligned with the associated line work and placed above the line. Any **Secondary Labels** such as survey bearing *shall* be placed below the line, and *should* be centered on the primary label. See Figure 11.1.1-D3.

Figure 11.1.1-D3 Primary and Secondary Line Labels

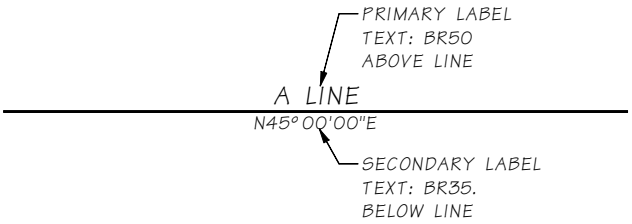

- **Centerline labels** *shall* be normal to the line itself approximately an eighth inch from the end of the line as shown in Figure 11.1.1-D4.

Figure 11.1.1–D4 Centerline Labels

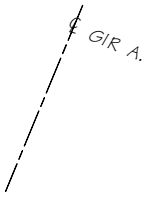

11.1.1.D.2 *Dimensioning*

- A dimension *shall* be shown **once** on a drawing. Duplication and unnecessary dimensions *should* be avoided.
- All dimension figures *shall* be placed above the dimension line, so that they may be read from the bottom or the right edge of the sheet, as shown in Figure 11.1.1-D5.

Figure 11.1.1-D5 Inclined Dimensions

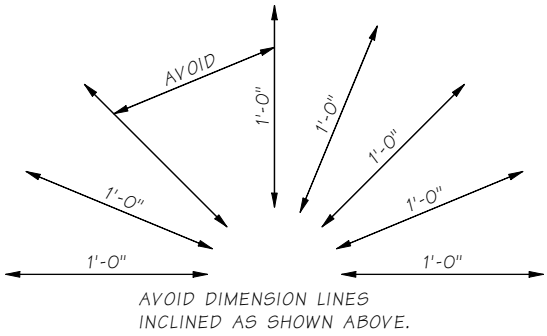

- When details or structural elements are complex, utilize two drawings, one for dimensions and the other for reinforcing bar details.
- Dimensions 12 inches or more *shall* be given in feet and inches unless the item dimensioned is conventionally designated in inches (for example, 16″ pipe).
- Dimensions that are less than one inch over an even foot, the fraction *shall* be preceded by a zero (for example, 3′-0¾″).
- Place dimensions outside the view, preferably to the right or below. However, in the interest of clarity and simplicity it may be necessary to place them otherwise. Examples of dimensioning placement are shown on Appendix 11.1-A1.

11.1.1.D.3 *Callouts (See Figure 11.1.1-D6 below)*

- Callouts *should* be specific, brief, and limited to not more than one sentence. The intent is to make the purpose clear, while reducing superfluous information that could both cloud the meaning of the content and clutter the drawing sheet.
- All callout text *shall* be left justified regardless of the position of the leader.
- When creating a callout, the detailer and the design engineer *should* attempt to limit the callout to not more than 3 lines of text and ensure the text is formatted in a way that each line is a similar length and forms a rectangular appearance. Additionally, a callout *should* be limited to not more than about 3 ½” to 4” in width.
- **Leaders** *shall* be attached to either the beginning or end of the sentence. This means the top line of text for leaders coming off the left of the callout or the bottom line of text for leaders pointing right.

Figure 11.1.1-D6 Callouts

A standard callout **shall** be left justified and **should** contain no more than 3 lines of text. It should also be relatively rectangular in format with the bottom line of text typically being not less than 2/3 the length of the line above.

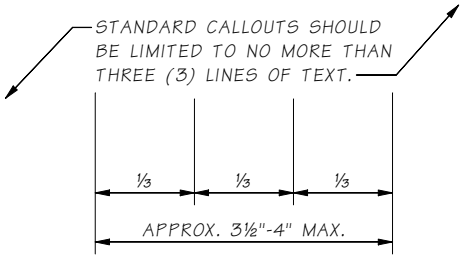

Avoid callouts with a right side leader where the bottom line is less than approximately 2/3 the length of the line above.

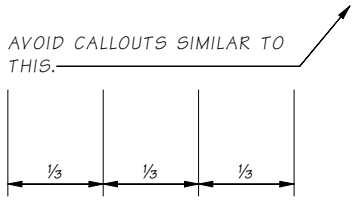

Dimensions shown in the above illustrations are for reference only.

11.1.1.D.4 *Key Notes (See Figure 11.1.1-D7 below)*

- Key notes are defined as **specific** notes pertaining to information or conditions within the plan sheet on which they reside. They are not to be confused with general notes, which are **non-specifi**c, or general in nature, and typically can be applied globally to the sheet or the whole plan set. Key notes *should* **not** be used to cover non-specific, or general information that would be typically specified in a general note.
- Key notes *should* be used in situations where a callout may become too large (more than 3 lines or more than 1-2 sentences), a callout would clutter the sheet or detail, or in situations where that same callout would need to be shown in multiple locations (3 or more) on the same view or detail.
- Key notes may be used to reference a standard plan, a note on another sheet, or even another sheet within the contract plan set that is separate from the bridge plans (i.e. roadway or illumination plans).
- The same key note may be referenced in multiple views or details so long as they are on the same plan sheet.
- Key notes will be referenced on the sheet as **"KEY NOTES":** and *should* be placed on the lower right side of the sheet whenever possible. Key notes *should* be placed below any general notes on the sheet (if applicable). They *should* be placed numerically and *shall* have a flag placed around the number.
- Key note flags shall be used to reference key notes within the drawing area. Each note flag will use the same symbol and corresponding number as found in the key notes.
- Note flags may be used with or without a leader as the situation dictates.
- Note flags *shall* be an elongated hexagon that is ¼" in height and ½" in length with each corner chamfered at 45° tapering to a single point at each end. The number *shall* be centered horizontally and vertically within.
- A note flag legend symbol *shall* be placed as part of the primary legend found typically on the first sheet of a plan set as this is a continuous standard found throughout the set in the same way a section or detail callout is. (see Figure 11.1.1-D1)

Figure 11.1.1-D7 Key Notes

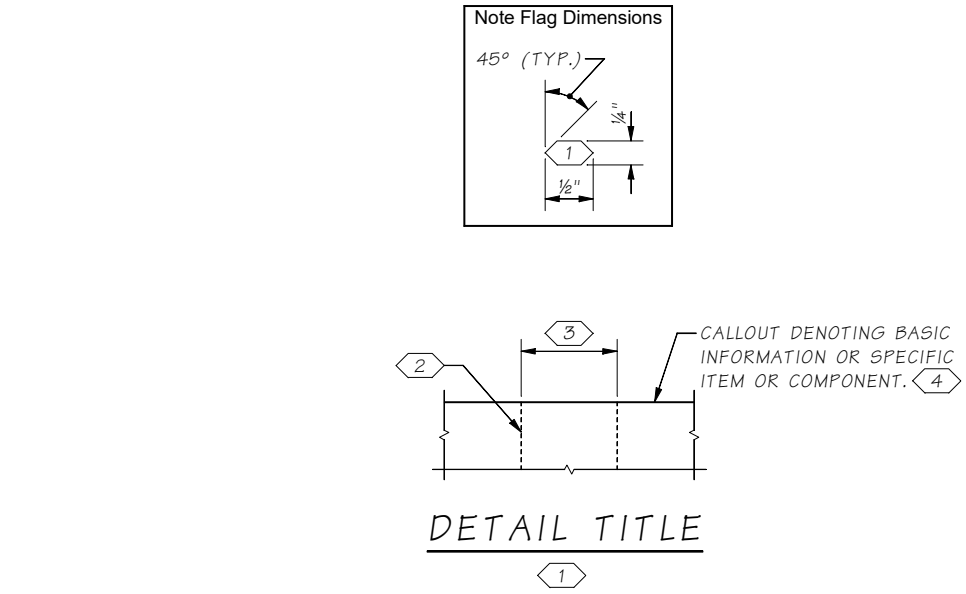

11.1.1.E Line Work

- All line work must be of sufficient size, weight, and clarity so that it can be easily read from a print that has been reduced to 11″ × 17″ or one-half the size of the original drawing.
- The line style used for a particular structural outline, centerline, etc., *shall* be kept consistent wherever that line is shown within a set of bridge plans.
- Line work *shall* have appropriate gradations of width to give line contrast as shown below. Care *shall* be taken that the thin lines are dense enough to show clearly when reproduced.

Figure 11.1.1-E1 Line Styles

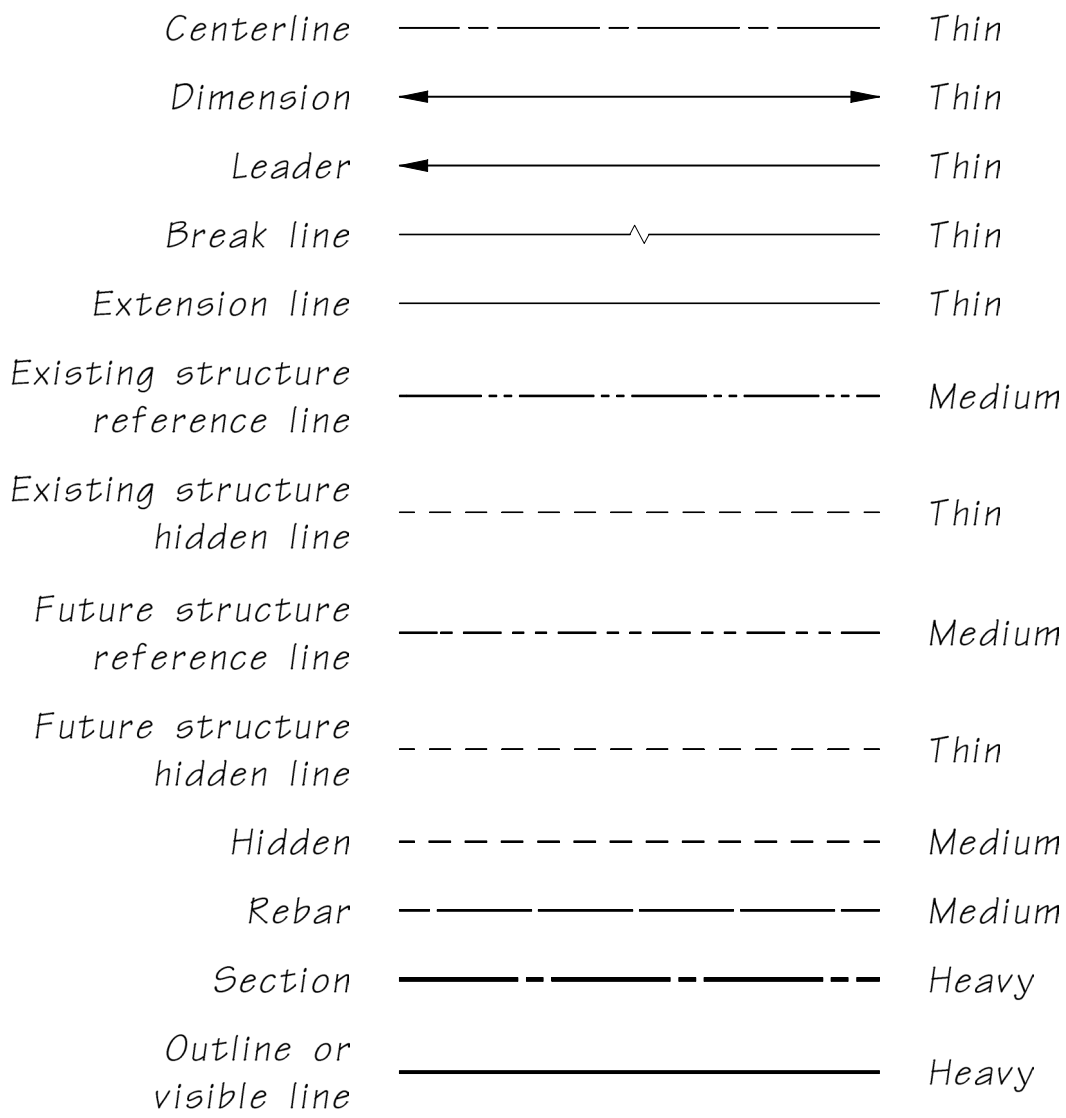

- When drawing structural sections showing reinforcing steel, the **outline** of the sections *shall* be a **heavier** line weight than the **rebar**.
- The order of **line precedence** (which of a pair of crossing lines is broken) is as follows:

  A. Dimension lines are never broken.

  B. Leader line from a callout.

  C. Extension line.

Figure 11.1.1-E2 Line Precedence

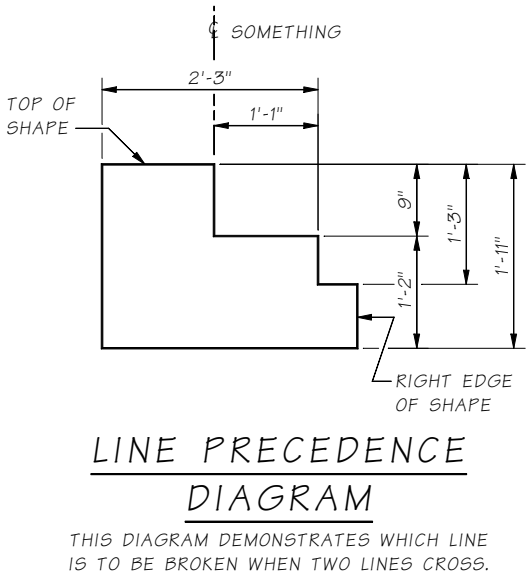

11.1.1.F Scale

- Scales are not to be shown in the plans.
- When **selecting a scale**, it *should* be kept in mind that the drawing will be reduced. Generally, the minimum scale for a section detail with rebar is ⅜″ = 1′. The minimum scale to be used on steel details will be ¾″ = 1′.
- The contract plan sheets are not to be used to take measurements in the field. They will, however, be drawn using **scales that can be found on any standard architectural or engineering scale**.
- Care *should* be taken that all structural elements are **accurately** drawn to scale.
- Sections and views may be enlarged to show more detail, but the number of different scales used *should* be kept to a minimum.

11.1.1.G Graphic Symbols

1. Graphic symbols *shall* be in accordance with the following:

   A. Structural steel shapes: See also AISC *Manual of Steel Construction*.

   B. Welding symbols: See Lincoln Welding Chart.

   C. Symbols for hatching different materials are shown on Appendix 11.2-A2.

11.1.1.H Structural Sections, Views and Details

- A **section** cuts through the structure, a view is from outside the structure, a **detail** shows a structural element in more detail – usually a larger scale.
- Whenever possible Sections and views *should* be taken looking to the **right, ahead on stationing**, or **down**.
- Care *shall* be taken to ensure that the **orientation** of a detail drawing is identical to that of the plan, elevation, etc., from which it is taken. Where there is a **skew** in the bridge any sections *should* be taken from **plan** views.
- The default is to be looking ahead on stationing. The only mention of view orientation is if the view is looking back on stationing.
- **Wall elevations** shown on the same sheet as the plan view *shall* be oriented with stationing increasing from left to right. **Wall elevations** shown on a sheet separate from the plan view *shall* be oriented to show the exposed face (view in the field as the wall is being built) regardless of direction of stationing. See Figure 11.1.1-H1 below.
- On plan and elevation drawings where there is insufficient space to show cut sections and details, the section and detail drawing *should* be on the plan sheet immediately following the plan and elevation drawing unless there are a series of related plans. If it is impractical to show details on a section drawing, a detail sheet *should* immediately follow the section drawing. In other words, the order of plan sheets *should* be from general plan to more minute detail.
- A circle divided into upper and lower halves *shall* identify structural sections, views, and details. Examples are shown in Appendix 11.2-A3.
- Breaks in lines are allowable provided that their intent is clear.

Figure 11.1.1-H1 Wall Elevation Orientation

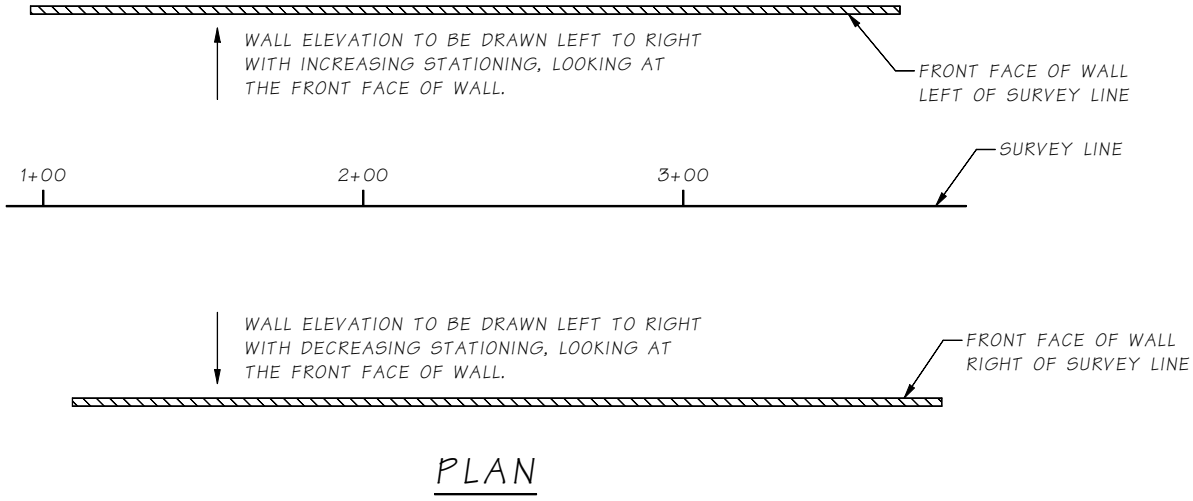

11.1.1.I Revisions

- All addendums and change orders will be noted in the **revision block** at the bottom of the sheet using font Sheet12. For the purpose of this section, change orders and addendums will be referred to collectively as **revisions** unless otherwise necessary.
- **Addendums** are made after general distribution and project ad but before the contract is awarded. Changes made to the plan sheets during this time *shall* be **shaded** or clouded in accordance with the *Plans Preparation Manual* Appendix 5 (note that all table entry revisions *shall* be shaded). Subsequent addendums are shaded and the shading from previous addendums is removed. **Additionally** addenda *shall* be noted in the revision block as "AD#" followed by a dash and the addendum description. For example "AD1 – CHANGE TB F-SHAPE TO SINGLE SLOPE 42 TB" denotes addendum number 1 and describes the main purpose of the revision on the particular sheet. Addenda will be numbered according to the assigned addendum number from the region office and may skip numbers on the bridge plans, as certain addenda may only pertain to other contract documents, such as roadway plans or special provisions. For example, it would not be uncommon to see addenda listed in the revision block numbered in a fashion such as "AD1, AD3, AD7, etc." See Figure 11.1.1-I Below.
- **Change orders** are made after the contract has been awarded. Changes will be marked with a revision number inside a circle within a **triangle**, commonly referred to as a **revision triangle**. Revision triangles *shall* appear in a standard numerical sequence (1, 2, 3 etc.) within the revision block. Immediately following the revision triangle *should* be the official change order number provided by the regional PEO in accordance with the WSDOT *Construction Manual* Section SS 1-04.4. Directly after the change order number will be a dash separating the number and the description, followed by the revision RFI number and/or the revision description. For example: "  CO9 – AA123 WIDEN BRIDGE FOR NEW LANE". Note that the plan revision triangle number and the change order won't always match, as shown in the above example. For additional examples, see Figure 11.1.1-I below.
- The **date** block of the revision table *should* contain the date of the revision request, but if not provided by the regional office, may be substituted by the date the revision design work was completed.
- The last two fields in the revision block are the "BY" and "APP'D" (approved by) blocks. The "BY" field should contain the designer's initials whereas the "APP'D" field should contain the approving authority's initials, which in most cases will be the design team supervisor.
- In the event there are **multiple** revisions on a given sheet, the previous revision information *shall* remain in the revision block. Revisions *shall* appear **chronologically** in the order received, starting with the oldest revision at the bottom. The revision *shall* be placed on the next available line above the revisions, however, only the **current iteration** *should* be shaded, clouded, or referenced in the drawing area. See Figure 11.1.1-I below.
- **Best practice** dictates that any time a revision occurs, a **new sheet** *should* be generated by copying the desired sheet to be modified and making the revisions on the copied sheet. This ensures the original sheet and associated data exists in an unmodified state that can be referred back to at a later time as necessary.

Figure 11.1.1-I Plan Revisions

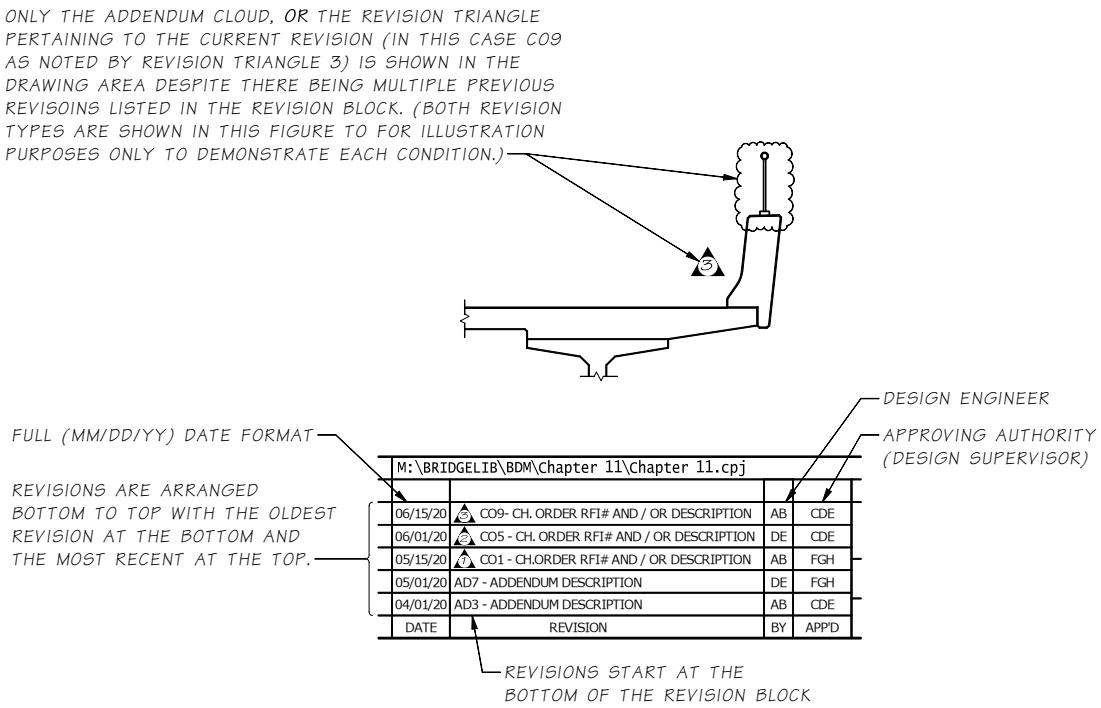

11.1.1.J Title Block

- The project title is displayed in the contract plan sheet title block. The title consists of Line 1 specifying the highway route number(s), Line 2 and possibly Line 3 specifying the title verbiage. Bridge structures use a fourth line, in a smaller font, to specify the bridge name and number in accordance with the *Bridge List* M 23-09 and BDM Sections 2.3.1.A and 2.3.2.A.
- The exact wording of Lines 1, 2, and 3 of the project title, including line arrangement, abbreviations, and punctuation, is controlled by the project definition as specified by legislative title and the Capital Program Management System (CPMS) database.
- The highway route number(s) in Line 1 *shall* be consistent with WSDOT naming practice. Interstate routes (5, 82, 90, 182, 205, 405, and 705) *shall* be specified as I-(number). US routes (2, 12, 97, 97A, 101, 195, 197, 395, and 730) *shall* be specified as US (number). All other routes *shall* be specified as SR (number). Projects including two highway routes *shall* include both route numbers in Line 1, as in “US 2 And I-5”. Projects including three or more highway routes *shall* be specified with the lowest numbered route, followed by “Et Al”, as in “SR 14 Et Al”.
- The job number block just to the left of the middle of the title block *shall* display the PS&E Job Number assigned to the project by the Region Plans Office. The PS&E Job Number consists of six characters. The first two characters correspond to the last two digits of the calendar year. The third character corresponds to the letter designation assigned to the specific Region (NWR - A, NCR - B, OR - C, WSF and selected UCO projects - W, SWR - X, SCR - Y, and ER - Z). The final three characters correspond to the three digit number assigned to the specific project by the Region Plans Office.

11.1.1.K Reinforcement Detailing

- This section is intended to define how reinforcement is to be detailed and called out on plan sheets. Reinforcement design and specification is to be conducted in accordance with this Section 5.1.2 by the design engineer. Graphical representation and notation shall be done in accordance with this Section 11.1.1-K.
- Contract documents *shall* convey all necessary information for fabrication of reinforcing steel. In accordance with *Standard Specifications* Section 6-02.3(24), reinforcing steel details shown in the bar list *shall* be verifiable in the plans and other contract documents.
- Typical reinforcement type and grade is specified in *Standard Specifications* Section 9-07.2 and need not be provided elsewhere in the contract documents unless it differs. Typical reinforcement is defined as the predominant type and grade of reinforcement used throughout the contract plan set.
- Any reinforcement that differs from the typical reinforcement *shall* include the type and grade as part of the callout within the contract plan set.
- Size, spacing, orientation and location of reinforcement *shall* be shown on the plan sheets.
- Reinforcement *shall* be identified by mark numbers inside a rectangle. Reinforcing bar marks *shall* be called out at least twice. The reinforcement including the spacing is called out in one view (such as a plan or elevation). The reinforcement without the spacing is called out again in at least one other view taken from a different angle (such as a section). See Appendix 11.1-A4 for reinforcement callout examples.
- Coating or treatment for reinforcement *shall* be shown in the plans by noting the letter designator inside of an inverted triangle. The coating designator *shall* be placed within a callout or dimension directly after the mark number. See Figure 11.1.1-K1 below.
- Material for reinforcement, when required, *shall* be shown using the corresponding two (2) letter designator inside of an ellipse measuring ½" wide by ¼" in height. The material designator *shall* be placed within a callout or dimension directly preceding the bar size. See Figure 11.1.1-K1 below.
- Bar size is to be shown on all reinforcement callouts and *shall* be shown using a pound (#) preceding the numeric size designator (i.e. #4). Bar size *shall* be placed within a callout or dimension after any coating and material designator, but prior to grade designator.
- Grade for reinforcement, when required, *shall* be shown using "GR." And the numeric grade designator (i.e. GR. 80). The grade designator *shall* be placed within a callout or dimension directly after the bar size designator. See Figure 11.1.1-K1 below.
- Reinforcement component type (stirrup, tie, etc.) *shall* be placed within a callout or dimension at the end of the callout after all other reinforcement designators. Component type is *NOT* required on reinforcement bars that are considered primary bars, regardless of hook or straight ends. **Primary reinforcement** bars are those whose purpose is to provide the main shape and reinforcement for the associated structure and are typically straight bars but may also have a hook at one or both ends. These are typically laid out in either the longitudinal or transverse orientation relating to the structure and aren't intended to connect additional reinforcement together such as a stirrup or a tie.

Figure 11.1.1-K1 Reinforcement Callout Symbology

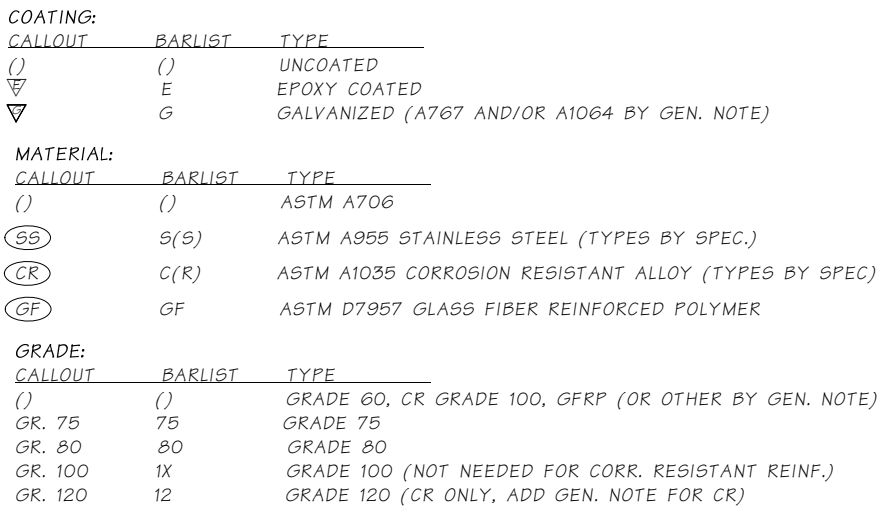

COATING:

CALLOUT	BARLIST	TYPE
()	()	UNCOATED
E	E	EPOXY COATED
G	G	GALVANIZED (A767 AND/OR A1064 BY GEN. NOTE)

MATERIAL:

CALLOUT	BARLIST	TYPE
()	()	ASTM A706
SS	S(S)	ASTM A955 STAINLESS STEEL (TYPES BY SPEC.)
CR	C(R)	ASTM A1035 CORROSION RESISTANT ALLOY (TYPES BY SPEC)
GF	GF	ASTM D7957 GLASS FIBER REINFORCED POLYMER

GRADE:

CALLOUT	BARLIST	TYPE
()	()	GRADE 60, CR GRADE 100, GFRP (OR OTHER BY GEN. NOTE)
GR. 75	75	GRADE 75
GR. 80	80	GRADE 80
GR. 100	1X	GRADE 100 (NOT NEEDED FOR CORR. RESISTANT REINF.)
GR. 120	12	GRADE 120 (CR ONLY, ADD GEN. NOTE FOR CR)

- The spacing for reinforcement *shall* be on a dimension line with extension lines. Do not point to a single bar and call out the spacing. Reinforcement spacing callouts *shall* include a distance. If the distance is an unusual number, give a maximum spacing. Do not use “equal spaces” as in, “23 equal spaces = 18′-9″ ” (the steel workers *should* not have to calculate the spacing). Also, never use the word “about” as in, “23 spaces @ about 10″ = 18′-9″ ”(this is open to too much interpretation). Instead these *should* read, “23 spaces @ 10″ max. = 18′-9″.”
- Reinforcement geometry *shall* be clear in plan details. Congested areas, oddly bent bars, etc. can be clarified with additional views/details/sections or adjacent bending diagrams. In bending diagrams, reinforcement dimensions are given out-to-out. It may be necessary to show edges of reinforcement with two parallel edge lines to clearly show working points and dimensions.
- Reinforcement lengths, angles, etc. need not be called out when they can be determined from structural member sizes, cover requirements, etc. Anchorage, embedment and extension lengths of reinforcement *shall* be dimensioned in the plans.
- Standard hooks per AASHTO LRFD Section 5.10.2.1 need not be dimensioned or called out, but *shall* be drawn with the proper angle (90°, 135° or 180°). Seismic hooks per AASHTO LRFD Section 5.10.2.2 (used for transverse reinforcement in regions of expected plastic hinges) *shall* be called out on the plans whenever they are used.
- Splices in reinforcement are required when reinforcement lengths exceed the fabrication lengths in Section 5.1.2.F. They may also be necessary in other locations such as construction joints, etc. The location, length and stagger of lap splices *shall* be shown on the plan sheets. Tables of applicable lap splice lengths are acceptable with associated stagger requirements. Type, location and stagger of mechanical and welded splices of reinforcement *shall* be shown.
- Where concrete cover requirements differ from those given in the standard notes or *Standard Specifications* Section 6-02.3(24)C, they *shall* be shown in the plans. It *shall* be clear whether the cover requirement refers to ties and stirrups or the main longitudinal bars.

- Bar list sheets *shall* be prepared for plan sets including bridges. They *shall* be included at the end of each bridge plan set. They are not stamped. They are provided in the plans as a convenience for the Contractor and are to be used at their own risk. Despite this warning, Contractors sometimes use the bar list directly to fabricate reinforcement without confirming details from the plans. Designers *should* therefore strive for accuracy in the bar list. An accurate bar list also serves as a checking mechanism and a way to calculate reinforcement quantities.
- The reinforcing for some structural members such as approach slabs, shafts, piles, barrier, retaining walls, bridge grate inlets, sign structure foundations, precast SIP deck panels and precast girders are not shown in the bar list at the end of the bridge plan set but may include their own bar list on their plan sheets. These components typically have shop plans, include steel reinforcement within their unit costs and/or are constructed by separate sub-contractors.
- Other reinforcement detailing references include ACI 315-99 "Details and Detailing of Concrete Reinforcement", ACI 318-08 "Building Code Requirements for Structural Concrete", and CRSI "Manual of Standard Practice".

11.1.2 Bridge Office Standard Drawings and Office Examples

11.1.2.A General

- The Bridge and Structures Office provides standard drawings and example sheets of various common bridge elements.

11.1.2.B Use of Standards

- The Standard Drawings are to be considered as nothing more than **examples** of items like girders or traffic barriers which are often used and are very similar from job to job.
- They are to be **copied** to a structure project and **modified to fit** the particular aspects of the structure. They are not intended to be included in a contract plan set without close scrutiny for applicability to the job.

11.1.2.C Maintenance of Standard Drawings

Ownership and maintenance of Bridge Standard Drawings is the responsibility of the drawing owner. Drawings are owned by the engineer responsible for the corresponding BDM chapter or section within the chapter in which they appear. The CAD Applications Engineer role is to ensure CAD standards are followed in accordance with this chapter as well as the WSDOT Electronic Engineering Data Standards (EEDS) Division 3-S5 PS&E Standards for any standard symbology not defined in a Bridge and Structures Office Standard library or the *Bridge Design Manual*. The CAD Applications Engineer will also ensure the folders containing the Standard Drawings are properly updated and that the Standard Drawings are published to the WSDOT Website.

The procedure for updating existing Bridge Standard Drawings or developing new Standards is:

1. Drawing owner will mark up drawings.
2. The drawing owner will first work within their assigned design team to have an available detailer revise the drawings. Assistance can be provided by the CAD Applications Engineer as needed.

3. Modifications shall be made to a copy of the Standard Drawing. The current standard shall not be altered.
4. The completed Standard Drawing will be reviewed by the drawing owner to ensure changes have been made correctly and CAD Applications Engineer for conformance with the CAD Standards.
5. The drawing owner will send the updated Standard Drawing to the Bridge Design Engineer in accordance with Section 11.1.2C.
6. Once the completed drawing is approved for use, the CAD Applications Engineer will update the standard drawing library, publish the drawing to the Bridge Office website, and notify the Bridge Design Office of the updates.

11.1.3 Typical Plan Set and Sheets

11.1.3.A Plan Sheet Organization

- Plan sheets *should* be assembled in the **order of construction** and be clear and logical when moving from one sheet to the next.
- Bridge and other structural plans can be broken into **Plan Groups**. A Plan Group is a grouping of all the corresponding plan sheets for one particular bridge or structure within a project, to include all primary and auxiliary structures and structural components.
- **Sheet numbering** *shall* start with the letter designator for the discipline followed by the letter designator for the plan group location within the project (i.e. A is the first structure, or plan group, in the project, B is the second structure, and so on). Plan group designators follow alphabetical order and are to be assigned to each bridge as it appears in the project along stationing. See Table 11.1.3-A1 below
  - An example would look like “BA1”. “B” represents the **Bridge** discipline, “A” denotes this is the first bridge in the project and “1” denotes the plan group sheet number, in this case, the first sheet in the plan group.
  - As a general rule, plan group designators *shall* avoid using the letters “I” and “O” as they may become confused with a one “1” or zero “0”
  - If there is only one bridge or structure plan group in the project plan set, the plan group letter designator *shall* be “A” (i.e. “BA”)

Table 11.1.3-A1 Structural Plan Discipline Designators

Designator	Definition
B	Bridge
S	Sign Structures
W	Wall

- If one of the listed disciplines in Table 11.1.3-A1 are part of a bridge plan group (i.e. a sign structure attached to a bridge in conjunction with other rehab or retrofit plans occurring on that bridge, or wingwalls on a bridge abutment) their associated sheets would fall under the Bridge discipline and would not fall under their stand-alone discipline such as “S” or “W”

11.1.3.B Sheet Types

- Drawing sheets make up the plan set for each bridge. These sheets are grouped into sub component groups (i.e. Abutment, girders, traffic barriers, etc.) and include the items listed below. Phasing or large-scale projects may require more than one sheet to properly detail plan items.
  - Layout
  - General Notes/Construction Sequence
  - Footing/Foundation Layout
  - Piles/Shafts
  - Abutment (First Pier)
  - Wingwalls (First Pier)
  - Intermediate Piers/Bents
  - Abutment (Final Pier)
  - Wingwalls (Final Pier)
  - Bearing Details
  - Framing Plan
  - Typical Section
  - Girders
  - End Diaphragms
  - Intermediate Diaphragms
  - Bridge Deck Reinforcement (Plan and transverse section)
  - Expansion Joints (if needed)
  - Traffic Barrier
  - Railing/Fence (if applicable)
  - Bridge Approach Slab
  - Sign Structure/Sign Support (if applicable)
  - Architectural Treatment
  - Barlist

Figure 11.1.3-B1 below is a standard sheet configuration when plan, elevation, and sectional views are required.

Figure 11.1.3-B1 Typical Sheet Setup

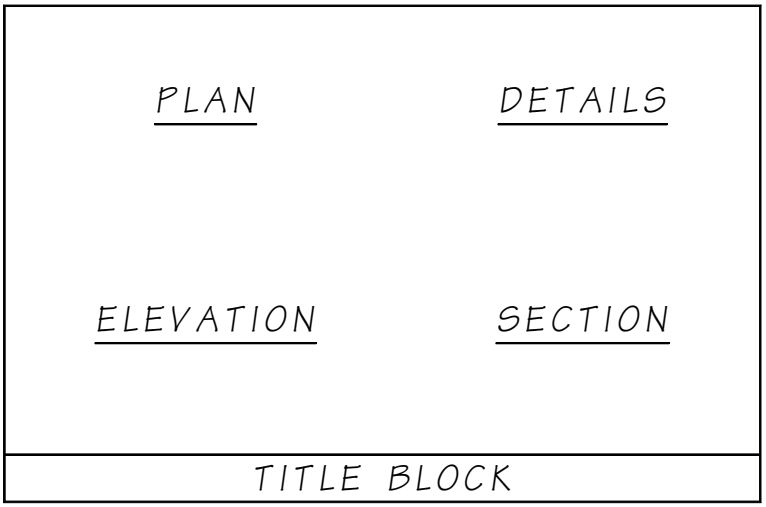

11.1.3.C Sheet Contents

- **Layout**
  - The Layout sheet *shall* contain, but is not limited to:
    - Plan View with ascending stations from left to right
    - Elevation View shown as an outside view of the bridge and *shall* be visually aligned with the plan view.
  - The original preliminary plan will be copied to create the final layout. Views, data, and notes may be repositioned to improve the final product.
  - Items on the preliminary plan, which *should* **not** appear on the final layout are as follows:
    - Typical roadway sections.
    - Vertical curve, Superelevation and curve data for other than the main line.
    - Other information that was preliminary or that will be found elsewhere in the plans.
  - Items not normally found on the preliminary plan, which *should* be **added**:
    - **Test hole locations** (designated by 3⁄16 inch circles, quartered) to plan view.
    - Elevation view of **footings**, **seals**, **piles**, etc. Show elevation at Bottom of footing and, if applicable, the type and size of piling.
    - **General notes** above legend on right hand side, usually in place of the typical section.
    - Title "LAYOUT" in the title block and sheet number in the space provided.
    - Other features, such as lighting, conduit, signs, excavation, riprap, etc. as determined by the designer.
  - The preliminary plan checklist in Appendix A, Chapter 2 can be used for reference.
- **General Notes/Construction Sequence**
  - The General notes *shall* contain the following information:
    - Reference to the current edition of the WSDOT *Standard Specifications*
    - Reference to the current edition of the AASHTO LRFD Design Specifications
    - Reference to the current AASHTO Seismic Design Specifications and seismic design category information
    - The types of concrete allowed on the project
    - Abutment backfill requirements
    - Concrete cover requirements
    - Concrete foundation seal information
    - Pile or shaft information
    - Material requirements
  - Additionally, if possible, the construction sequence *should* be placed on this sheet. If there is not room on the General Notes sheet, the construction sequence *shall* be its own sheet immediately following the General Notes sheet.

- **Footing/Foundation Layout**
  - An abutment with a **spread footing** has a Footing Layout. An abutment with piles and pile cap has a Foundation Layout.
  - The Footing Layout is a plan of the bridge whose details are limited to those needed to **locate the footings**. The intent of the Footing Layout is to minimize the possibility of error at this initial stage of construction.
  - The Foundation Layout is a plan of the bridge whose details are limited to those needed to **locate the shafts or piles**. The intent of the Foundation Layout is to minimize the possibility of error at this initial stage of construction.
  - Other related information and/or details such as pedestal sizes, and column sizes are considered part of the pier drawing and *should* **not be included** in the Footing Layout.
  - The Footing Layout *should* be shown on the layout sheet if space allows. It need not be in the same scale. When the general notes and footing layout cannot be included on the first (layout) sheet, the Footing Layout *should* be included on the second sheet.
  - Longitudinally, footings *should* be located using the **survey line** to reference such items as the footing, centerline pier, centerline column, or centerline bearing, etc.
  - When **seals** are required, their locations and sizes *should* be clearly indicated on the Footing Layout. Seal depth and elevations *should* be shown on abutment and pier sheets as required. The Footing Layout should have references to the pertinent information on those sheets as necessary.
  - The Wall Foundation Plan for retaining walls is similar to the Footing Plan for bridges except that it also shows dimensions to the front face of wall.
- **Piles/Shafts**
  - Pile and shaft details will be associated with a **Foundation Layout** or a **Footing Layout** (if the footing is to have piles below, acting as a pile cap more so than a spread footing).
  - These detail sheets will come immediately after the Foundation Layout or Footing Layout if they are to be used to support an **Abutment** or directly after the abutment sheets if used to support **Intermediate Piers**.
  - **Best practice** is to have a set of shaft or pile details **for each pier**, however, the design engineer may choose to use one set of details for the whole bridge plan set, as long as all variables and conditions are addressed and would be clear to the contractor reading the plans.
  - Typically, when showing items below ground, they would be detailed using a hidden line style. **However**, because the shaft "elevation" is detailed more like a section, it is not necessary, and in fact, discouraged to show the below ground portions as hidden.
  - Bridge elements that have not yet been built *should* **not** be shown, unless it is to add clarification to the condition being detailed. For example, a shaft cap may be shown to highlight the penetration depth of the shaft into the cap. Any future element (those that have **not** been built yet) *shall* be shown using a **DDASH** line style in accordance with Figure 11.1.1-E1.

- **Abutment**
  - Abutment piers *shall* be detailed separately due to the elevation views being opposite directions in relation to stationing. This will mitigate any chance for confusion in the field due to asymmetrical profiles or grades, and any differences in skew.
  - Bridge elements that have not yet been built will not be shown. For example, the superstructure is not to be shown, dashed or not, on any substructure details.
  - Elevation information for seals and piles or shafts may be shown on the abutment or pier sheets. Seal depth and elevations may be shown on abutment or pier elevation views and may also be shown on section views only if required for additional clarification.
  - Seals should be shown on Abutment or Pier sheets as necessary but *should* not include dimensions already specified on the Footing Layout
  - Views are to be oriented so that they represent what the contractor or inspector would most likely see on the ground. Pier 1 elevation is often shown looking back on stationing. A note *should* be added under the Elevation Pier 1 title saying "Shown looking back on stationing".
- **Wingwall Details**
  - Wingwall detail sheets *shall* be placed directly after each set of Abutment detail sheets.
  - These sheets are permitted to show superstructure components, even though they would not be built at the time the wingwalls are being built. This is to show relational data, such as open joint dimensions and top slope of wall in relation to deck haunch. The future substructure components shown *shall* be detailed in a **DDASH** line style in accordance with Figure 11.1.1-E1 to represent a future component to be built.
  - Each abutment *should* have its own set of wingwall detail sheets, however, each wingwall for that particular abutment pier may be represented concurrently by a single set of details using elevation tables and other multi-data representations to differentiate between each wall. Additionally, the design engineer may permit the use of a single set of wingwall sheets for all wingwalls within the project so long as all the information requirements are met and would be clear to the contractor.
- **Intermediate Piers/Bents**
  - Each pier *should* be detailed separately as a general rule or best practice.
  - If the intermediate piers are identical except for height, then they may be shown together at the discretion of the design engineer, so long as the design intent and the information pertaining to **each** pier is clear and easily understood.
- **Bearing Details**
  - Typically shown after all substructure details directly before the girder framing plan.
  - Only one bearing detail sheet is needed in the plan set. If multiple are required, they *should* be directly placed after all detail sheets for each abutment pier and their attached structures (i.e. wingwall sheets)

- **Framing Plan**
  - Girder Lines must be identified in the plan view (Gir. A, Gir. B, etc.).
  - For adjacent deck girder bridges, such as slab girders and wide flange thin deck girders, the framing plan *shall* be based on the girder centerline or centerline work point rather than the gap width between adjacent girders.
- **Typical Section**
  - Girder spacing, which is tied to the bridge construction baseline
  - Roadway slab thickness, as well as web and bottom slab thicknesses for box girders
  - "A" dimension
  - Limits of pigmented sealer
  - Profile grade and pivot point and cross slopes
  - Utility locations
  - Curb to curb roadway width
  - Soffit and drip groove geometry
- **Girders**
  - Prestressed girder sheets can be copied from the Bridge Office library but they must be modified to match the project requirements.
- **End Diaphragm**
  - End diaphragm sheets can be copied from the Bridge Office library but they must be modified to match the project requirements
  - Only one set of End Diaphragm details is required, however, specific conditions may warrant a separate set of details for each End Diaphragm. This will be at the discretion of the Design Engineer.
- **Intermediate Diaphragm**
  - Intermediate diaphragm sheets can be copied from the Bridge Office library but they must be modified to match the project requirements
  - Only one set of Intermediate Diaphragm details is required if there are multiple diaphragms, however, specific conditions may warrant a separate set of details for each Intermediate Diaphragm. This will be at the discretion of the Design Engineer.
- **Bridge Deck Reinforcement**
  - Plan and transverse section views
  - Traffic barrier reinforcing bars shall be called out on the Bridge Deck Reinforcement Plan sheet by using an overall dimension as shown in Figure 11.1.3-C1. The S1 and S2 bars are to be detailed, dimensioned, and their spacing shall be shown only on the Traffic Barrier Details 1 sheet.

Figure 11.1.3-C1 Traffic Barrier Reinf. Callout on Bridge Deck Reinf. Plan

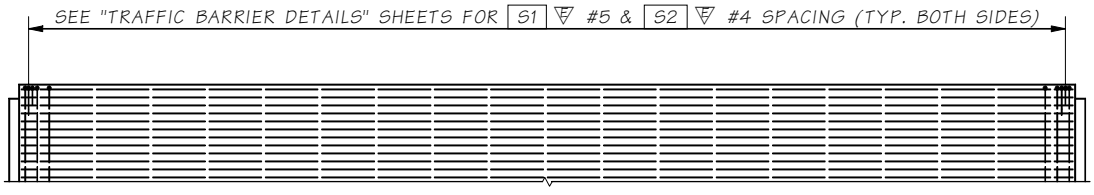

- **Expansion Joints**
  - On a single span bridge, expansion joint details are typically part of the approach slab plan sheets
  - On a multi-span bridge, expansion joint details are typically on a stand-alone sheet group that comes after the superstructure deck sheets.
  - Expansion joint sheets can be copied from the Bridge Office Library but they must be modified to match the project requirements.
- **Traffic Barrier**
  - Traffic barrier sheets can be copied from the Bridge Office library but they must be modified to match the project requirements.
- **Railing/Fence**
  - Railing or Fence sheets can be copied from the Bridge Office library but they must be modified to match the project requirements.
- **Bridge Approach Slab**
  - Approach slab sheets can be copied from the Bridge Office library and modified as necessary for the project.
- **Signs/Sign Structures**
  - Sign and Sign Structure sheets can be copied from the Bridge Office library but they must be modified to match the project requirements.
  - These only pertain to signage that will be attached to the bridge or supporting bridge structure
- **Architectural Treatment**
  - The State Bridge and Structures Architect is responsible for designing and approving much of the architectural treatment to be used. Detailers will work with the State Bridge and Structures Architect to incorporate the treatment and associated details into the plan set.
  - If a standard drawing exists in the Bridge Office library, it is permissible to copy these and modify them as necessary.
  - If there are no standard drawings in the Bridge Office library, the State Bridge and Structures Architect may approve the use of a similar set of details from an existing plan set, as long as the details used are modified to meet the requirements of the current plan set.
  - If no standards or examples exist, the State Bridge and Structures Architect is responsible for the design and requirements of the Architectural Treatment.
  - Basic treatments that are commonly used (i.e. Fractured Fin finish) may be incorporated into the detail or plan sheets it pertains to, such as traffic barrier or wingwall sheets, and have standard details that already exist for use without the need of the Bridge Office Architect to design or approve the use of.
  - Some, more complex, instances require Architectural treatment to be its own set of plan sheets.
- **Barlist**
  - The barlist sheets do not require stamping because they are not officially part of the contract plan set.

11.1.3.D Wall Structure Sheets and Detailing Practices

Wall sheets within the contract plan set shall be determined and placed by the WSDOT region office responsible for the corridor project regardless of the design group responsible for drafting the wall plans. Any bridge plan sheet that includes wall geometry should do so only for reference and should only include minimal wall information as necessary to reduce redundant information.

Walls that directly support bridge loads or act as a bridge abutment, such as a geosynthetic retaining wall supporting a bridge footing, shall be laid out and detailed entirely in the bridge plan set as these will be treated as bridge structural components.

Unless the wall to be detailed meets specific criteria as mentioned previously, the wall sheets will stand alone in their own section of the plan set as determined by the WSDOT region office. Therefore, although it is important to show and reference the walls on the bridge layout sheet, the walls shall have their own separate layout sheet(s) as required. The following specifies general minimum requirements for each wall sheet detailed by the bridge design group.

11.1.3.D.1 *Layout*

- It is permissible for all of the walls within the plan set to be placed on a single wall layout sheet if the size and scaling permits, and only when deemed appropriate by the design engineer as a means to best convey overall design intent, otherwise each wall will have its own individual layout.
- If using a single layout sheet, the wall sheets should be organized by placing all walls in the same location within the Contract Plans.
- Each layout view shall include stationing and offset along the alignment for both the wall alignment and the main project construction alignment.
- Each layout view shall include all utilities that will be in place (existing) at the time of wall construction and are located within the vicinity of the wall.

11.1.3.D.2 *Developed Elevation*

- Each wall shall have a developed elevation view. This view may be placed on the layout sheet if size and scaling permits, otherwise will be placed on its own sheet.
- Each elevation view shall be detailed using the same vertical and horizontal scale. Exaggerated horizontal or vertical scales are not permitted.
- Each elevation view shall have an overall dimension of the wall along the wall alignment line.
- Each elevation view shall include additional horizontal dimension lines denoting the size and total number of each wall section panels if applicable and the locations of expansion joints and or contraction joints.
- The elevation view shall show the existing and proposed ground line at the top and bottom of the wall.
- Each elevation view shall show, at a minimum, the top elevation and bottom elevation at the beginning of the wall and the end of the wall, as well as the elevation at any profile transition.

- Each elevation view shall show all existing utilities that will intersect the face of the wall or wall alignment. New utilities intersecting the face of the wall or wall alignment that will need to be accommodated by the construction of the wall shall be shown as well.
- A reference elevation may be shown in a wall elevation view if deemed necessary by the design engineer to help clarify the design intent and improve plan readability. If shown, the elevation line shall be placed below the ground line as determined by the design engineer. The reference elevation should be determined based on 20-foot increments from 0 and should be set at the previous 20-foot incremented elevation prior to the lowest elevation of the ground line. For example, a low ground elevation of 163.35' would call for a minimum reference elevation of 160.00' but for plan clarity and readability could be set at any previous 20-foot incremented elevation such as 140.00.' or 100.00' but is recommended to keep it as close as possible to the low ground elevation to maintain visual association with the view.
- For wall height dimensioning standards refer to BDM Section 8.1.11.E.

11.1.3.D.3 *Details*

- All relevant details necessary to construct all aspects of the wall shall be included in the plan set. Standard Plan retaining wall details shall not be included unless modifications to such details have been made.
- For additional detailing requirements refer to BDM Section 8.1.11.E.
- If a design requires specific and unique architectural finishes, a detail sheet or sheets shall be included in the wall plan set as required.

11.1.4 Electronic Plan Sharing Policy

The following procedure describes the Bridge Design Office or WSDOT consultants' electronic plan sharing policy with other WSDOT offices, consultants, contractors and other agencies:

Plan sheets prepared by the Bridge Design Office or WSDOT consultants may be electronically sent out to other WSDOT offices, consultants, contractors and other agencies in DWG format only if all of the following steps are taken:

1. Entire information in the title block is removed from the plan sheet.
2. A disclaimer reading "FOR INFORMATION ONLY" is printed diagonally across each plan sheet; and
3. A letter of disclaimer is sent as a cover or an attachment to the plan sheet(s), indicating that attached plans are for information only and that WSDOT has no responsibility for accuracy of the contents.

Bridge Office plan sheets may also be electronically shared if requested in PDF format. PDF files need to only include the disclaimer noted in Step 2 above. Examples of bridge plan sheets modified for electronic sharing are shown for clarity. Time spent modifying and submitting electronic plan sheets *shall* be charged to the job number provided by the construction PE's office.

This policy applies only to current projects under design or under contract. Historical or as-built plan sheets may only be shared in PDF format, and only if condition #3 is followed, as described above.

11.1.5 Structural Steel

11.1.5.A General

- Flat pieces of steel are termed plates, bars, sheets or strips, depending on the dimensions.

11.1.5.B Bars

- Up to 6 inches wide, 0.203 in. (3⁄16 inch) and over in thickness, or 6 inches to 8 inches wide, 0.230 in. (7⁄32 inch) and over in thickness.

11.1.5.C Plates

- Over 8 inches wide, 0.230 in. (7⁄32 inch) and over in thickness, or over 48 inches wide, 0.180 in (11⁄64 inch) and over in thickness.

11.1.5.D Strips

- Thinner pieces up to 12 inches wide are strips and over 12 inches are sheets. A complete table of classification may be found in the AISC Manual of Steel Construction, 8th Ed. Page 6-3.

11.1.5.E Labeling

- The following table shows the usual method of labeling some of the most frequently used structural steel shapes. Note that the inches symbol (“) is omitted, but the foot symbol (‘) is used for length including lengths less than a foot.

Figure 11.1.5-E1 Steel Callout Symbology

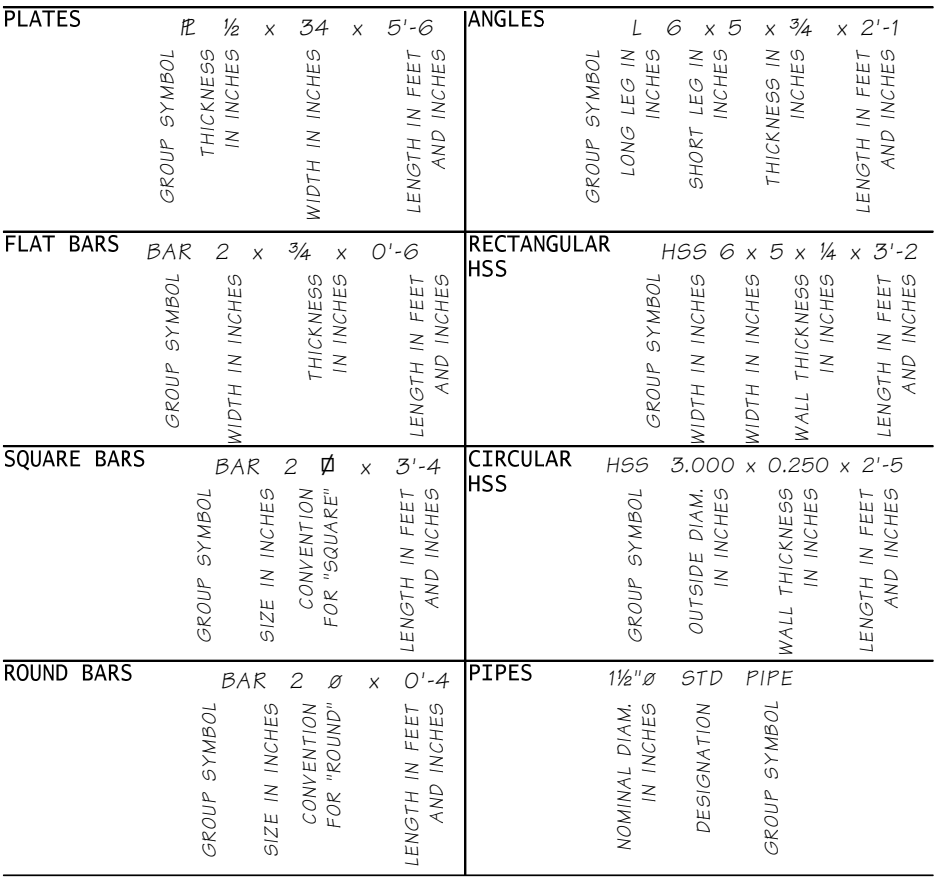

11.1.6 Aluminum Section Designations

The designations used in the tables are suggested for general use.

Table 11.1.6-1

Section	Designation	Example
I-Beams	I *DEPTH* × *WT*	14 × 3.28
Wide-Flange Sections	WF *DEPTH* × *WT*	WF4 × 4.76
Wide-Flange Sections, Army-Navy Series	WF(A-N) *DEPTH* × *WT*	WF(A-N)4 × 1.79
American Standard Channels	C *DEPTH* × *WT*	C4 × 1.85
Special Channels	CS *DEPTH* × *WT*	CS4 × 3.32
Wing Channels	CS(WING) *WIDTH* × *WT*	CS(WING)4 × 0.90
Army-Navy Channels	C(A-N) *DEPTH* × *WT*	C(A-N)4 × 1.58
Angles	L *LL* × *LL* × *TH*	L3 × 3 × 0.25
Square End Angles	LS *LL* × *LL* × *TH*	LS2 × 2 × 0.187
Bulb Angles	BULB L *LL1* × *LL2* × *TH1* × *TH2*	BULB L4 × 3.5 × 0.375 × 0.375
Bulb Angle, Army-Navy Series	BULB L(A-N) *LL1* × *LL2* × *TH1* × *TH2*	BULB L(A-N) 3 × 2 × 0.188 × 0.188
Tees	T *DEPTH* × *WIDTH* × *WT*	T4 × 4 × 3.43
Army-Navy Tees	T(A-N) *DEPTH* × *WIDTH* × *WT*	T(A-N)4 × 4 × 2.27
Zees	*Z DEPTH* × *WIDTH* × *WT*	Z4 × 3.06 × 2.85
Plates	PL *TH* × *WIDTH*	PL¼ × 8
Rods	RD *DIA*	RD 1
Square Bars	SQ *SDIM*	SQ 4
Rectangle Bars	RECT *TH* × *WIDTH*	RECT¼ × 4
Round Tubes	*ODIA OD* × *TH* WALL	4OD × 0.125 WALL
Square Tubes	*ODIM SQ* × *TH* WALL	3SQ × 0.219 WALL
Rectangle Tubes	*DEPTH* × *WIDTH RECT* × *TH* WALL	4 × 1.5 RECT × 0.104 WALL

WT - WEIGHT in LB/FT based on density of 0.098
TH - THICKNESS, LL - LEG LENGTH, DIA – DIAMETER
ODIA - OUTSIDE DIAMETER, ODIM - OUTSIDE DIMENSION
SDIM - SIDE DIMENSION
All lengths in inches

11.1.7 Abbreviations

11.1.7.A General

- Abbreviations, as a rule, are to be **avoided**.
- Because different words sometimes have identical abbreviations, the word *should* be spelled out where the meaning may be in doubt.
- A few **standard signs** are in common use in the Bridge and Structures Office. These are listed with the abbreviations.
- A **period** *should* be placed after all abbreviations, except as listed below.
- **Apostrophes** are usually not used. Exceptions: pav't., req'd.
- Abbreviations for **plurals** are usually the same as the singular. Exceptions: figs., no., ctrs., pp.
- No abbreviations in titles.

11.1.7.B List of abbreviations commonly used on bridge plan sheets:

A

abutment	ABUT.
adjust, adjacent	ADJ.
aggregate	AGG.
alternate	ALT.
ahead	AHD.
aluminum	AL.
American Society for Testing and Materials	ASTM
American Association of State Highway and Transportation Officials	AASHTO
and	&
angle point	A.P.
approved	APPRD.
approximate	APPROX.
area	A
asbestos cement pipe	ASB. CP
asphalt concrete	AC
asphalt treated base	ATB
at	@ (used only to indicate spacing or pricing, otherwise spell it out)
avenue	AVE.
average	AVG.

B

back	BK.
back of pavement seat	B.P.S.
bearing	BRG.
begin horizontal curve (Point of Curvature)	P.C.
begin vertical curve	BVC
bench mark	BM
between	BTWN.

bituminous surface treatment	BST
bottom	BOT.
boulevard	BLVD.
bridge	BR.
bridge drain	BR. DR.
building	BLDG.
buried cable	BC

C

cast-in-place	CIP
cast iron pipe	(C.I.P.)
center, centers	CTR., CTRS.
centerline	℄
center of gravity	CG
center to center	CTR. TO CTR., C/C
Celsius (formerly Centigrade)	C
cement treated base	CTB
centimeters	CM.
class	CL.
clearance, clear	CLR.
compression, compressive	COMP.
column	COL.
concrete	CONC.
conduit	COND.
concrete pavement	PCCP (Portland Cement Concrete Pavement)
construction	CONST. or CONSTR.
continuous	CONT. or CONTIN.
corrugated	CORR.
corrugated metal	CM
corrugated steel pipe	CSP
countersink	CSK.
county	CO.
creek	CR.
cross beam	X-BM.
crossing	XING
cross section	X-SECT.
cubic feet	CF or CU. FT. or $FT.^3$
cubic inch	CU. IN. or $IN.^3$
cubic yard	CY or CU. YD. or YD^3
culvert	CULV.

D

degrees, angular	° or DEG.
degrees, thermal	C or F
diagonals(s)	DIAG.
diameter	DIAM. or ø
diaphragm	DIAPH.
dimension	DIM.
double	DBL.
drive	DR.

E

each	EA.
each face	E.F.
easement	EASE., ESMT.
East	E.
edge of pavement	EP
edge of shoulder	ES
endwall	EW
electric	ELECT
elevation	EL. or ELEV.
embankment	EMB.
end horizontal curve (Point of Tangency)	P.T.
end vertical curve	EVC
Engineer	ENGR.
equal(s) or = (mathematical result)	EQ. (as in eq. spaces)
estimate(d)	EST.
excavation	EXC.
excluding	EXCL.
expansion	EXP., EXPAN.
existing	EXIST.
exterior	EXT.

F

Fahrenheit	F
far face	F.F.
far side	F.S.
feet (foot)	FT. or ’
feet per foot	FT./FT. or ’/’ or ’/FT.
field splice	F.S.
figure, figures	FIG., FIGS.
flat head	F.H.
foot kips	FT-KIPS
foot pounds	FT-LB
footing	FTG.
forward	FWD.
freeway	FWY.

G

gallon(s)	GAL.
galvanized	GALV.
galvanized steel pipe	GSP
gauge	GA.
General Special Provisions	GSP
girder	GIR.
ground	GR.
guard railing	GR

H

hanger	HGR.
height	HT.
height (retaining wall)	H
hexagonal	HEX.
high strength	H.S.
high water	H.W.
high water mark	H.W.M.
highway	HWY.
horizontal	HORIZ.
hot mix asphalt	HMA
hour(s)	HR.
hundred(s)	HUND.

I

included, including	INCL.
inch(es)	IN. or “
inside diameter	I.D.
inside face	I.F.
interior	INT.
intermediate	INTERM.
interstate	I
invert	INV.

J

joint	JT.
junction	JCT.

K

kilometer(s)	KM.
kilopounds	KIPS, K.

L

layout	LO
left	LT.
length of curve	L.C.
linear feet	L.F.
longitudinal	LONGIT.
lump sum	L.S.

M

maintenance	MAINT.
malleable	MALL.
manhole	MH
manufacturer	MFR.
maximum	MAX.
mean high water	MHW
mean higher high water	MHHW
mean low water	MLW
mean lower low water	MLLW
meters	M.
mile(s)	MI.
miles per hour	MPH
millimeters	MM.
minimum	MIN.
minute(s)	MIN. or ‘
miscellaneous	MISC.
modified	MOD.
monument	MON.

N

National Geodetic Vertical Datum 1929	NGVD 29
near face	N.F.
near side	N.S.
North	N.
North American Vertical Datum 1988	NAVD 88
Northbound	NB
not to scale	NTS
number; numbers	#, NO., NOS.

O

or	/
original ground	O.G.
ounce(s)	OZ.
outside diameter	O.D.
outside face	O.F.
out to out	O to O
overcrossing	O-XING
overhead	OH

P

page; pages	P.; PP.
pavement	PAV'T
pedestrian	PED.
per cent	%
pivot point	PP
Plans, Specifications and Estimates	PS&E
plate	° or PL
point	PT.
point of compound curve	PCC
point of curvature	P.C.
point of intersection	P.I.
point of reverse curve	PRC
point of tangency	P.T.
point on vertical curve	PVC
point on horizontal curve	POC
point on tangent	POT
polyvinyl chloride	PVC
portland cement concrete	PCC
pound, pounds	LB., LBS., #
pounds per square foot	PSF, LBS./FT.^{2}, LBS./ ',or #/'
pounds per square inch	PSI, LBS./IN.^{2}, LBS./ ",or #/"
power pole	PP
precast	P.C.
pressure	PRES.
prestressed	P.S.
prestressed concrete pipe	P.C.P.
Puget Sound Power and Light	P.S.P.&L.

Q

quantity	QUANT.
quart	QT.

R

radius	R.
railroad	RR
railway	RWY.
Range	R.
regulator	REG.
reinforced, reinforcing	REINF.
reinforced concrete	RC
reinforced concrete box	RCB
reinforced concrete pipe	RCP
required	REQ'D
retaining wall	RET. WALL
revised (date)	REV.
right	RT.
right of way	R/W
road	RD.
roadway	RDWY.
route	RTE.

S

seconds	SEC. or "
Section (map location)	SEC.
Section (of drawing)	SECT.
sheet	SHT.
shoulder	SHLD. or SH.
sidewalk	SW. or SDWK
South	S.
southbound	SB
space(s)	SPA.
splice	SPL.
specification	SPEC.
square foot (feet)	SQ. FT. or $FT.^2$
square inch	SQ. IN. or $IN.^2$
square yard	SY, SQ. YD. or $YD.^2$
station	STA.
standard	STD.
state route	SR
stiffener	STIFF.
stirrup	STIRR.
structure, structural	STR.
support	SUPP.
surface, surfacing	SURF.
symmetrical	SYMM.

T

tangent	TAN. or T.
telephone	TEL.
temporary	TEMP.
test hole	T.H.
thick(ness)	TH.
thousand	M
thousand (feet) board measure	MBM
ton(s)	T.
total	TOT.
township	T.
transition	TRANS.
transportation	TRANSP.
transverse	TRANSV.
treatment	TR.
typical	TYP.

U

ultimate	ULT.
undercrossing	U-XING

V

variable, varies	VAR.
vertical	VERT.
vertical curve	V.C.
vitrified clay pipe	VCP
volume	VOL. or V

W

water surface	W.S.
weight(s)	WT.
welded steel pipe	WSP
welded wire fabric	W.W.F.
West	W.
Willamette Meridian	W.M.
wingwall	W.W.
with	W/
without	W/O

Y

yard, yards	YD., YDS.
year(s)	YR.

11.2 Appendices

Appendix 11.2-A1 Dimensional Callout Example

Appendix 11.2-A2 Typical Details

Appendix 11.2-A3 Typical Section Callouts

Appendix 11.2-A4 Reinforcement Callout Examples

Appendix 11.2-A1 Dimensional Callout Example

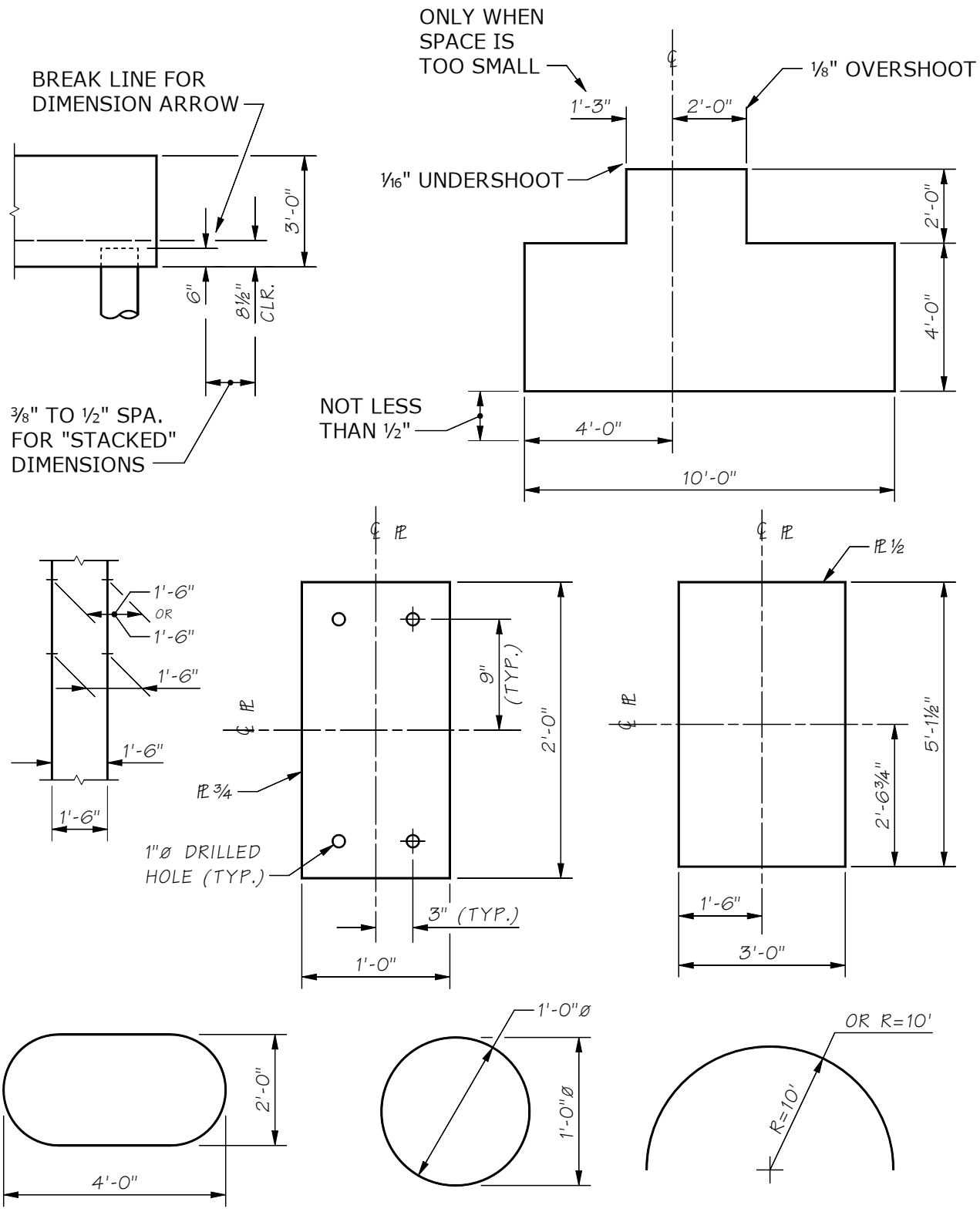

Appendix 11.2-A2 Typical Details

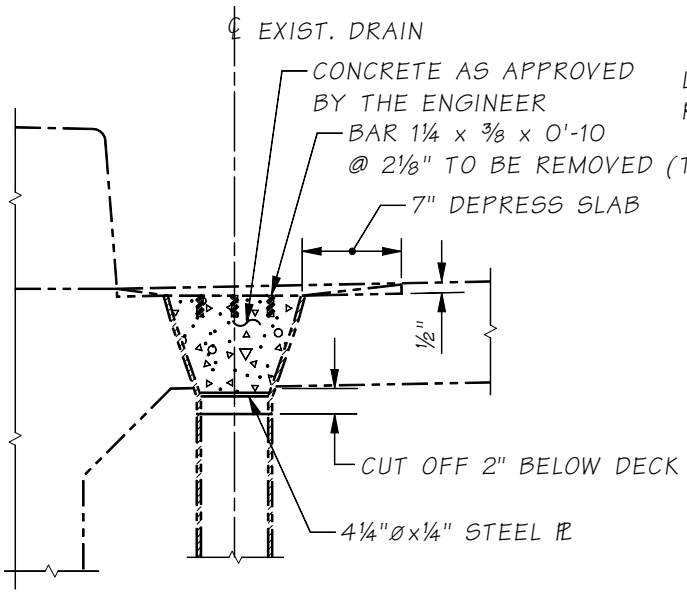

TYPICAL CONCRETE DETAIL

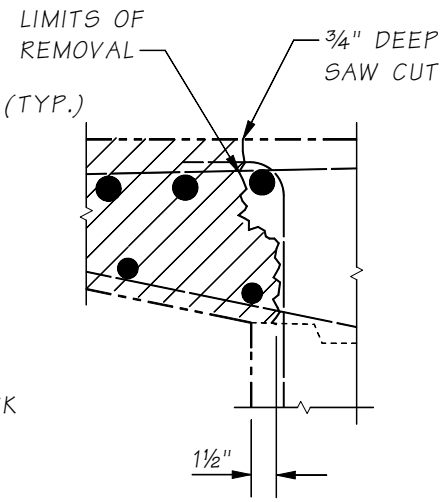

TYPICAL REMOVAL DETAIL

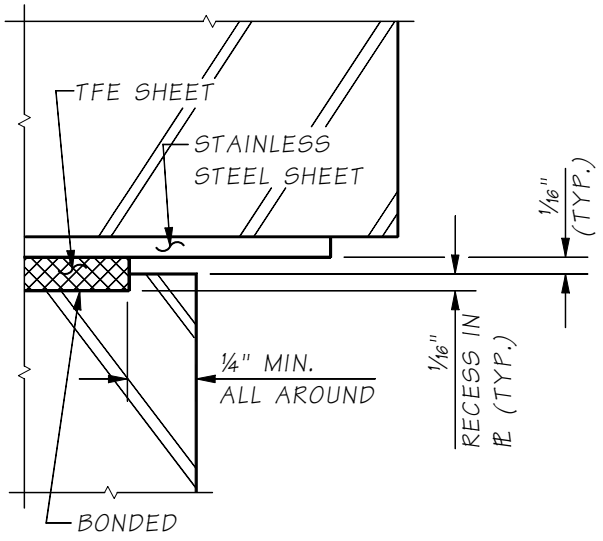

TYPICAL STEEL DETAIL

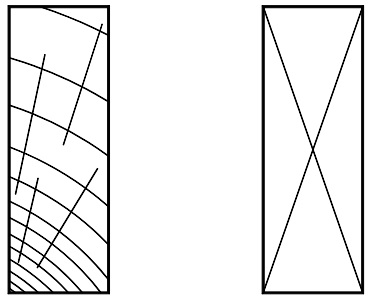

TYPICAL TIMBER DETAIL

Appendix 11.2-A3 Typical Section Callouts

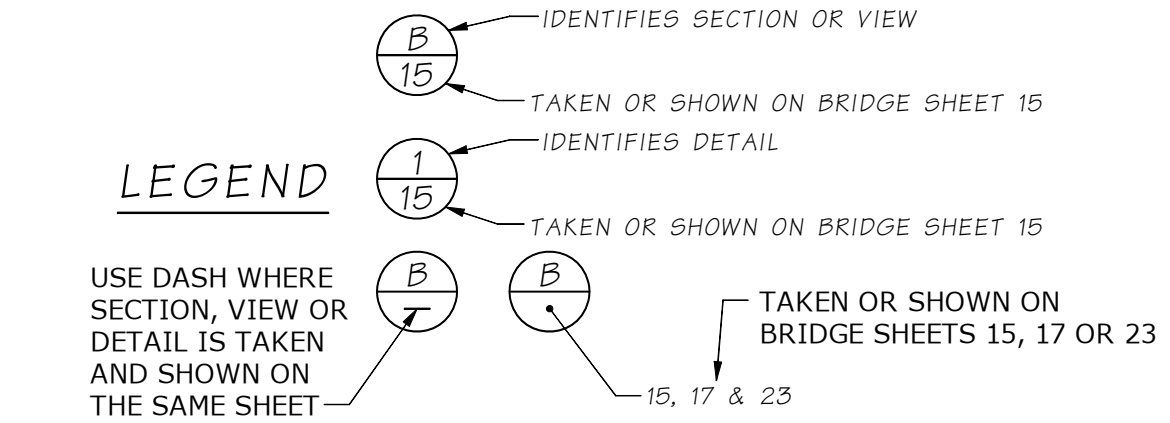

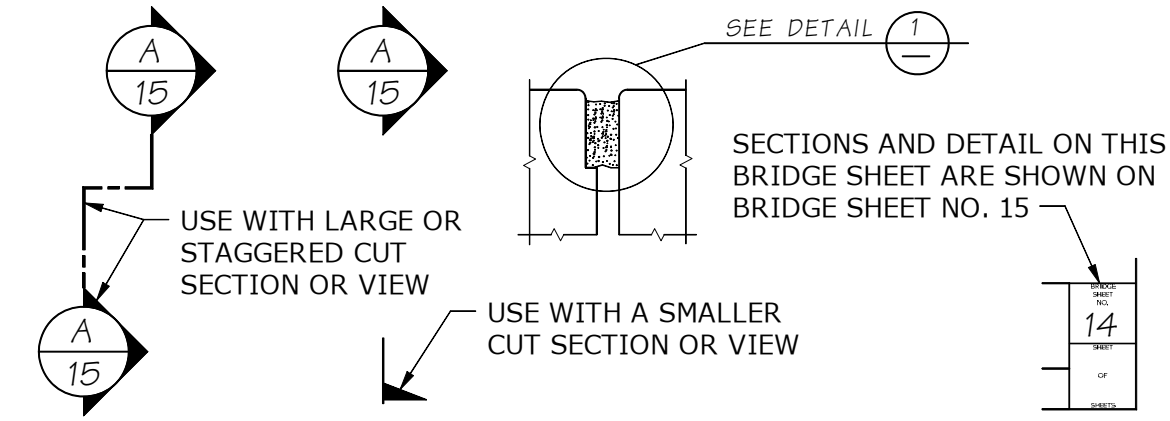

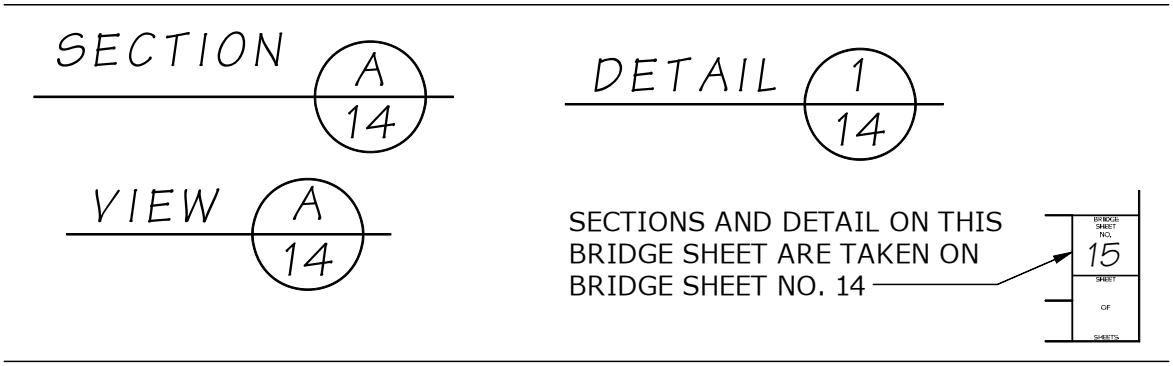

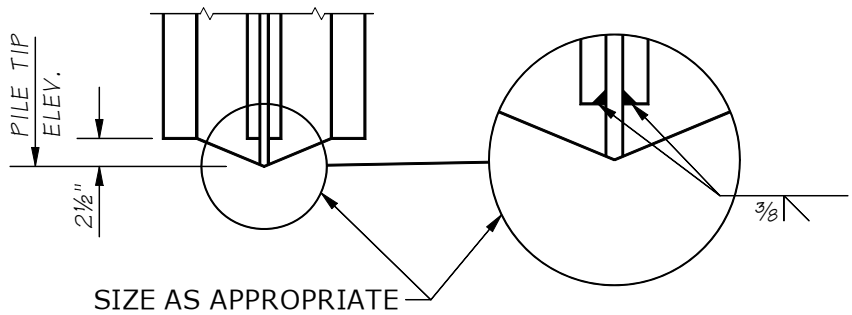

Appendix 11.2-A4 Reinforcement Callout Examples

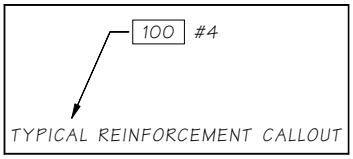

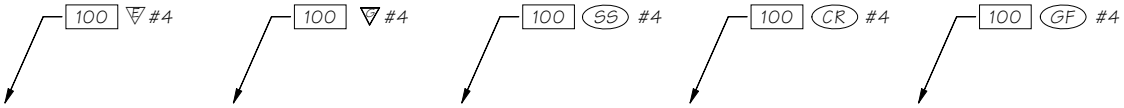





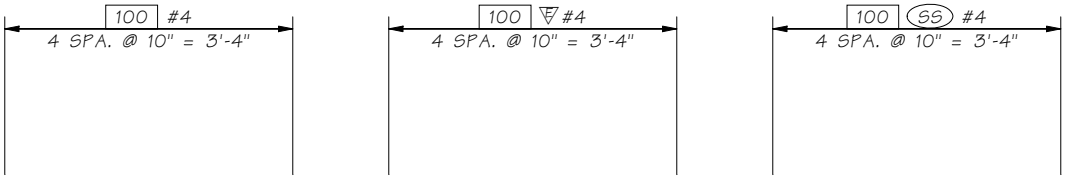

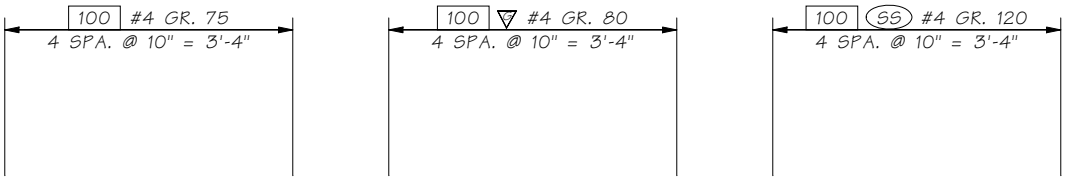

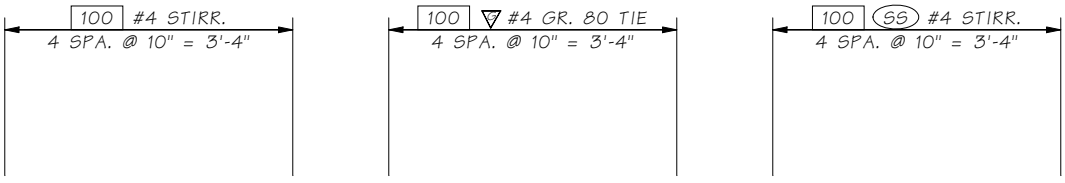

Chapter 12
Quantities, Costs, and Specifications — Contents

12.1 Quantities - General . . . 12-1
12.1.1 Cost Estimating Quantities . . . 12-1
12.1.1.A Conceptual Stage . . . 12-1
12.1.1.B Preliminary Plan Stage . . . 12-1
12.1.1.C Design Stage . . . 12-1
12.1.1.D Final Contract Quantities . . . 12-1
12.1.2 Not Included in Bridge Quantities List . . . 12-1
12.2 Computation of Quantities . . . 12-2
12.2.1 Responsibilities . . . 12-2
12.2.1.A Design Unit . . . 12-2
12.2.1.B Bridge Project Support Unit . . . 12-2
12.2.2 Procedure for Computation . . . 12-2
12.2.3 Data Source . . . 12-3
12.2.4 Accuracy . . . 12-3
12.2.4.A Preliminary Quantities . . . 12-3
12.2.4.B Final Quantities . . . 12-3
12.2.5 Excavation . . . 12-3
12.2.5.A Structure Excavation, Class A . . . 12-3
12.2.5.B Special Excavation . . . 12-5
12.2.6 Shoring or Extra Excavation, Class A . . . 12-6
12.2.7 Piling . . . 12-8
12.2.8 Conduit Pipe . . . 12-8
12.2.9 Private Utilities Attached To Bridge Structures . . . 12-9
12.2.10 Drilled Shafts . . . 12-9
12.3 Construction Costs . . . 12-10
12.3.1 Introduction . . . 12-10
12.3.2 Factors Affecting Costs . . . 12-10
12.3.2.A Type of Structure . . . 12-10
12.3.2.B Location of Project Site . . . 12-10
12.3.2.C Size of Project Contract . . . 12-10
12.3.2.D Foundation Requirements . . . 12-10
12.3.2.E Sequencing of Project . . . 12-10
12.3.3 Development of Cost Estimates . . . 12-11
12.3.3.A Types . . . 12-11
12.3.3.A.1 Prospectus and Project Summary Estimates . . . 12-11
12.3.3.A.2 Preliminary Design Estimates . . . 12-11
12.3.3.A.3 Estimate Updates During Design . . . 12-11
12.3.3.A.4 Contract Estimates . . . 12-11

12.3.3.B Responsibilities . . . 12-12
12.3.3.B.1 Bridge Project Support Unit . . . 12-12
12.3.3.B.2 Designer . . . 12-12
12.3.3.C Documentation . . . 12-12
12.3.3.D Cost Data . . . 12-12
12.3.3.D.1 General . . . 12-12
12.3.3.D.2 Deck or Wall Face Area . . . 12-12
12.3.3.D.3 Bridge Widenings and New Bridges . . . 12-13
12.3.3.D.4 Bridge Rail Replacement . . . 12-13
12.3.3.D.5 Bridge Lengths With Unequal Wingwalls . . . 12-13
12.3.3.D.6 Retaining Walls . . . 12-13

12.4 Construction Specifications and Estimates . . . 12-14
12.4.1 General . . . 12-14
12.4.2 Definitions . . . 12-14
12.4.2.A Standard Specifications . . . 12-14
12.4.2.B Mandatory General Special Provisions . . . 12-14
12.4.2.C Special Provisions . . . 12-14
12.4.2.D Addendum . . . 12-14
12.4.2.E AD Copy . . . 12-14
12.4.2.F As defined in *Standard Specifications* Section 1-02.4 . . . 12-14
12.4.3 General Bridge S&E Process . . . 12-15
12.4.3.A Typical Reviews and Milestone Dates . . . 12-15
12.4.3.B Constructability Review Set Distribution . . . 12-15
12.4.3.C PS&E Review Set Distribution . . . 12-16
12.4.4 Reviewing Bridge Plans . . . 12-16
12.4.4.A Job File . . . 12-16
12.4.4.B PS&E Check List (Form 230-037 and Appendix 12.4-A1) . . . 12-16
12.4.4.C Summary of Quantities (Form 230-031 and Appendix 12.2-A1) . . . 12-17
12.4.4.D Plans . . . 12-17
12.4.4.E Not Included in Bridge Quantities List (Form 230-038 and Appendix 12.1-A1) . . . 12-17
12.4.4.F Geotechnical Report . . . 12-17
12.4.5 Preparing the Bridge Cost Estimates . . . 12-17
12.4.5.A General . . . 12-17
12.4.5.B Procedure . . . 12-18
12.4.6 Preparing the Bridge Specifications . . . 12-18
12.4.6.A General . . . 12-18
12.4.6.B Procedure . . . 12-18
12.4.7 Preparing the Bridge Working Day Schedule . . . 12-19
12.4.7.A General . . . 12-19
12.4.7.B Procedure . . . 12-19

12.4.8 Reviewing Projects Prepared by Consultants . . . 12-20
12.4.8.A General . . . 12-20
12.4.8.B Procedure . . . 12-20
12.4.9 Submitting the PS&E Package . . . 12-20
12.4.9.A General . . . 12-20
12.4.10 PS&E Review Period and Turn-in for AD Copy . . . 12-21
12.4.10.A Description . . . 12-21
12.4.10.B Procedure . . . 12-21
12.5 Appendices . . . 12-22
Appendix 12.1-A1 Not Included In Bridge Quantities List . . . 12-23
Appendix 12.2-A1 Bridge Quantities . . . 12-24
Appendix 12.3-A1 Structural Estimating Aids Construction Costs . . . 12-29
Appendix 12.3-A2 Structural Estimating Aids Construction Costs . . . 12-31
Appendix 12.3-A3 Structural Estimating Aids Construction Costs . . . 12-33
Appendix 12.3-A4 Structural Estimating Aids Construction Costs . . . 12-35
Appendix 12.3-B1 Cost Estimate Summary . . . 12-36
Appendix 12.4-A1 Special Provisions Checklist . . . 12-37
Appendix 12.4-A2 Structural Estimating Aids Construction Time Rates . . . 12-42
Appendix 12.4-B1 Construction Working Day Schedule . . . 12-44

This page intentionally left blank.

Chapter 12 Quantities, Costs, and Specifications

12.1 Quantities - General

The quantities of the various materials and work items involved in the construction of a project that includes bridges and structures are needed for establishing the estimated cost of the project throughout the design process, and for establishing a basis for comparison of the contractor's bids.

12.1.1 Cost Estimating Quantities

Quantities for establishing cost estimates are often necessary during various stages of project development and are required at the completion of the Bridge PS&E. These quantities should be calculated from the best information available at the time, see Section 12.2.3. The policy regarding the preparation of quantity calculations is as follows:

12.1.1.A Conceptual Stage

During the conceptual stage of a project, estimated quantities may be required to arrive at an estimated cost. The need for conceptual stage quantities will be determined by the Bridge Project Support Unit.

12.1.1.B Preliminary Plan Stage

Upon completion of the preliminary plan, estimated quantities may be required to arrive at an estimated cost. The need for preliminary plan stage quantities will be determined by the Bridge Project Support Unit.

12.1.1.C Design Stage

If requested, quantity calculations shall be made, reviewed, and submitted to the Bridge Project Support Unit by the Bridge Design Unit as the design progresses. The first submittal of estimated quantities shall be made as soon as the major dimensions of the structure are determined. As refinements in the design are made, quantities varying more than 10 percent from those previously submitted shall be resubmitted.

12.1.1.D Final Contract Quantities

Upon completion of structural design and plans, the quantities of materials and work items involved in the construction of the project shall be computed,. See Sections 12.2.2 and 12.2.4.B.

12.1.2 Not Included in Bridge Quantities List

Items of work which appear in the bridge plan sheets, but for which details, specifications, and quantities are not included in the Bridge PS&E, shall be listed in the "Not Included in Bridge Quantities List" (WSDOT Form 230-038 and Appendix 12.1-A1). This list is required for every bridge, even if no items of work are shown in the Plans that are in this category. (In this case, fill out the bridge information at the top of the form and write "NONE" across the form.) This form is transmitted to the Region Design PE Office with all Preliminary Plan submittals, all Bridge PS&E distributions, and at various milestone points during the design process, to ensure that the responsibility for all PS&E items is clear. Particular care shall be taken in the preparation of this list as omissions can result in an incomplete project PS&E with missing information for work items, or conflicting overlapping information for work items.

12.2 Computation of Quantities

12.2.1 Responsibilities

12.2.1.A Design Unit

The Design Unit is responsible for calculating quantities required for cost estimates for Preliminary Plans prepared in Design Units, calculating preliminary quantities at various milestones during the design process, and calculating quantities for the final Bridge PS&E. The Design Unit is responsible for notifying the Region Design PE Office and the Bridge Project Support Unit whenever structural design changes and alterations are made to the design features and quantities which affect the cost of the structure, especially following the distribution of the initial Preliminary Plan.

12.2.1.B Bridge Project Support Unit

The Bridge Project Support Unit is responsible for computing quantities for conceptual stage cost estimates, and cost estimates for Preliminary Plans prepared in the Bridge Project Support Unit. The Bridge Project Support Unit is responsible for ensuring that the quantities listed in the AD Copy Bid Proposal correspond to those received from the Design Unit.

12.2.2 Procedure for Computation

Quantities are to be computed and checked independently. The designer/originator and checker shall separately summarize their calculated quantities on the Bridge Quantities Form 230-031 (See Appendix 12.2-A1) in the units shown thereon. The two summaries shall be submitted to the Design Unit Manager for comparison. The designer/originator and checker shall use identical breakdowns for each quantity. For example, the designer/originator's quantities for excavation for each of Piers 1, 2, and 3 should be compared separately against the corresponding quantities made by the checker.

When the desired accuracy, see Section 12.2.4, is achieved, a Manager's Bridge Quantities form shall be prepared and submitted to the Bridge Project Support Unit along with the Pre-Contract Review Bridge Plans review set. (This form is the same as previously mentioned except that it is labeled "Manager's Bridge Quantities" and is completed by the Design Unit Manager or designee. If the Design Unit Manager elects, the designer/originator's or the checker's Bridge Quantities form may be designated as "Supervisor's Bridge Quantities.") This form is used by the Bridge Project Support Unit to prepare the final bridge cost estimate.

All quantity calculations and bridge quantities forms are to be filed in the job file for the structure or the PS&E file for the project. All subsequent revisions shall be handled in the same manner as the original quantities. On the "Bridge Quantities" form, any revision to the original figure should not be erased but crossed out and replaced by the new figure using a different colored pencil. If there are too many revisions, the old summary sheet should be marked void, left in the file, and a new sheet made out, marked "Revised," dated, and the original forwarded to the Bridge Project Support Unit.

Mistakes in quantities can be very costly to Contracting Agency. The designer/originator and checker must account for all items of work on the "Bridge Quantities" form, and must also be careful to enter an item of work only once (e.g., concrete or steel rebar in the superstructure should not be entered both in the lump sum superstructure breakdown and in the unit bid item quantity).

12.2.3 Data Source

Quantities of materials for use in preliminary cost estimates can often be obtained from the quantities calculated for previous similar designs. This information is available from the Bridge Project Support Unit.

12.2.4 Accuracy

12.2.4.A Preliminary Quantities

Quantities used for cost estimates prepared during the conceptual stage of the design are expected to have an accuracy of ± 10 percent. The first iteration of quantities, after the preliminary plan has been completed, is expected to have an accuracy of ± 5 percent.

12.2.4.B Final Quantities

Final quantities in the Bridge PS&E submittal, including bar list quantities, to be listed in the Special Provisions and Bid Proposal sheet of the AD Copy, are to be calculated to have an accuracy of ± 1 percent.

12.2.5 Excavation

12.2.5.A Structure Excavation, Class A

Excavation necessary for the construction of bridge piers and reinforced concrete retaining walls is classified as Structure Excavation, Class A (see the definition as specified in *Standard Specifications* Section 2-09.3(2)). Payment for such excavation is generally by volume measurement. The quantity of excavation to be paid for is measured as specified in *Standard Specifications* Section 2-09.4, and computation of this quantity shall conform to these specifications. If the construction circumstances for the project require structure excavation limits that do not conform to the *Standard Specifications* definition, then the modified structure excavation limits shall be shown in details in the Plans.

Structure excavation for footings and seals shall be computed using a horizontal limit of 1 foot 0 inches outside and parallel to the neat lines of the footing or seal or as shown in the Plans. The upper limit shall be the ground surface or stream bed as it exists at the time the excavation is started. See Figure 12.2.5-1(A), (B), and (C).

Figure 12.2.5-1

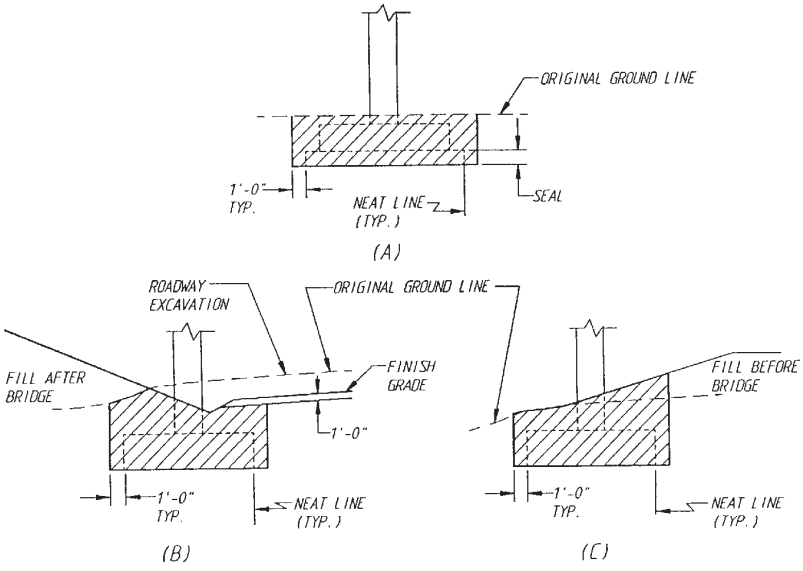

Structure excavation for the construction of wing walls shall be computed using limits shown in Figure 12.2.5-2.

Figure 12.2.5-2

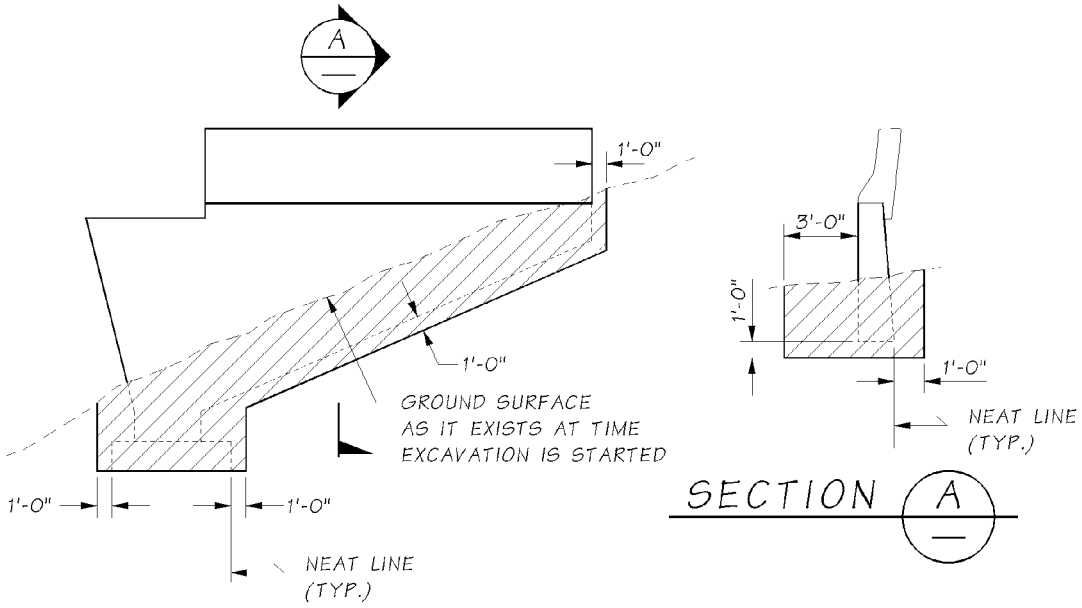

Figure 12.2.5-3

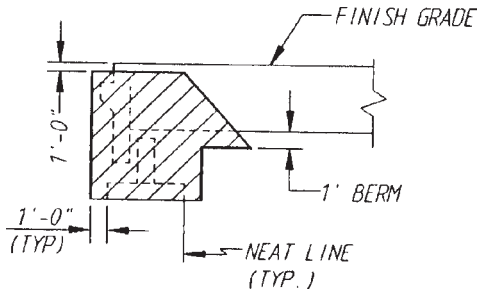

When bridge approach fills are to be constructed in the same contract as the bridge, and the foundation conditions do not require full height fills to be placed prior to the construction of the pier, the approach fill is constructed in two stages, i.e., constructed up to the bottom of footing or 1 foot above the bottom of footing, and then completed after the bridge construction. (The State Geotechnical Office shall be consulted on the staging method.) The structure excavation shall be computed from the top of the first stage fill.

The bottom of a spread footing will be placed 1 foot 0 inches below the top of the first stage fill. See Figure 12.2.5-4(A). The bottom of footings supported on piling will be placed at the top of the first stage fill; therefore no structure excavation is required (see Figure 12.2.5-4(B)).

The limits for stage fills shall be shown in the Plans with the structure excavation, if any.

Figure 12.2.5-4

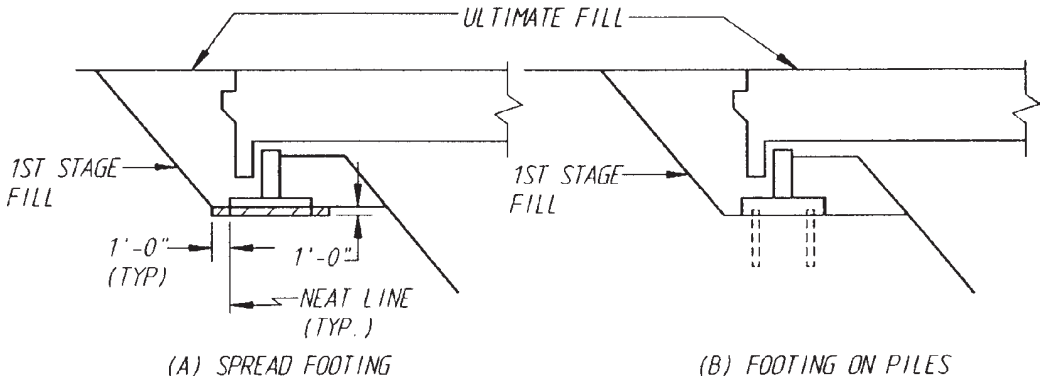

Prior to pier construction, when (1) a full height fill with or without surcharge is required for settlement, or (2) the original ground line is above the finish grade line, the upper limit of structure excavation shall be computed to 1 foot 0 inches below the finish grade (pavement) line (see Figure 12.2.5-5).

Figure 12.2.5-5

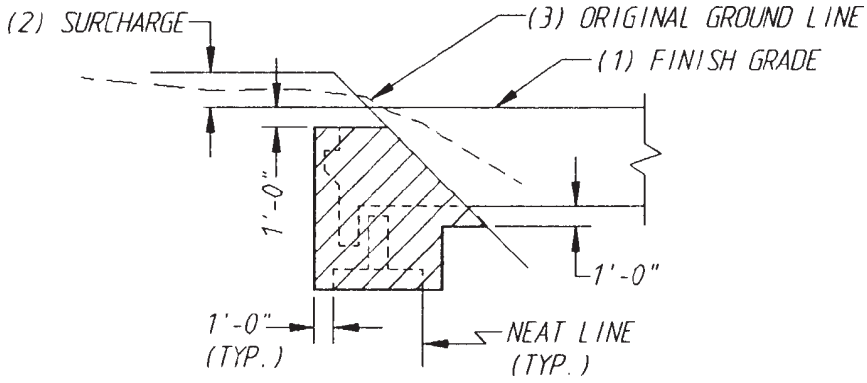

12.2.5.B Special Excavation

The excavation necessary for placement of riprap around bridge piers is called Special Excavation (see Figure 12.2.5-6).

Special excavation shall be computed from the top of the seal to the existing stream bed or ground line along the slopes indicated in the Plans. Special excavation will only include excavation outside the limits of structure excavation.

The limits for special excavation shall be shown in the Plans.

Figure 12.2.5-6

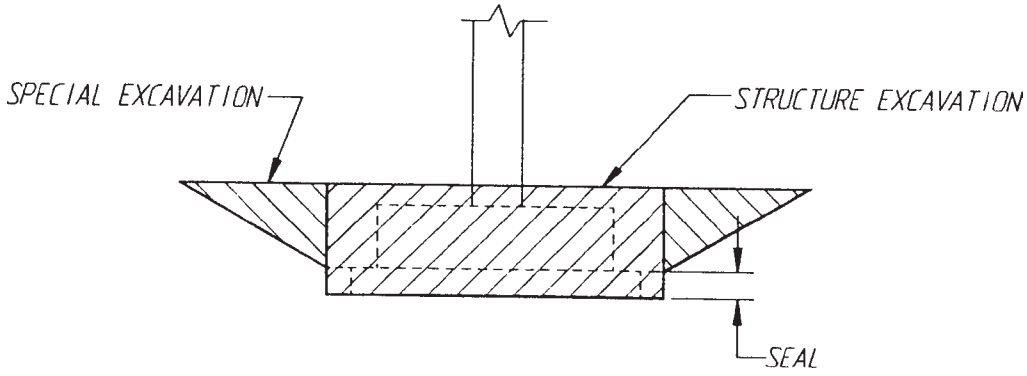

12.2.6 Shoring or Extra Excavation, Class A

Shoring, cofferdams or caissons, or extra excavation required for construction of bridge footings and reinforced concrete retaining walls constructed in the wet or dry is classified as Shoring or Extra Excavation, Class A. See *Standard Specifications* Section 2-09.3(3).

Structural shoring (for dry excavation) or cofferdams (for wet excavation) is required for all excavations near completed structures (foundations of bridges, walls, or buildings), near underground utilities, near railroad tracks, and near pavement. Shoring located within 25 feet the centerline of a railroad track shall be designed in accordance with the UPRR & BNSF Guidelines for Temporary Shoring. All other excavation four feet or more in depth shall be either shored with structural shoring or cofferdams, or shall meet the open-pit excavation requirements as specified in *Standard Specifications* Section 2-09.3(3)B.

For the purpose of estimating the cost for shoring or extra excavation, Class A, it is necessary to compute the peripheral area of an assumed sheet pile enclosure of the excavated area.

While payment for Shoring or Extra Excavation, Class A, is made at a lump sum contract price, the costs are a function of the overall height of excavation. In general, each side of the excavation for each pier shall be categorized into an average overall height range as shown on WSDOT Form 230-031 (i.e., less than 6 feet, 6 to 10 feet, 10 to 20 feet, or greater than 20 feet), the area for the side computed using the appropriate width times the average overall height, the overall area for the side shall be entered in the category that matches the side's average overall height. These calculations are required for each pier of the bridge as applicable. See accompanying Figure 12.2.6-1 and sample calculation.

For excavation in the dry, the peripheral area shall be the perimeter of the horizontal limits of structure excavation times the height from the bottom of the footing to the ground surface at the time of excavation.

For excavation in water, the peripheral area shall be the perimeter of the horizontal limits of structure excavation times the height from the bottom of the seal to 2 feet above the seal vent elevation.

For shaft-type excavations, it is not normally necessary to compute the area for shoring because the shoring is usually accommodated by the work items for permanent casing, temporary casing, and casing shoring.

Figure 12.2.6-1

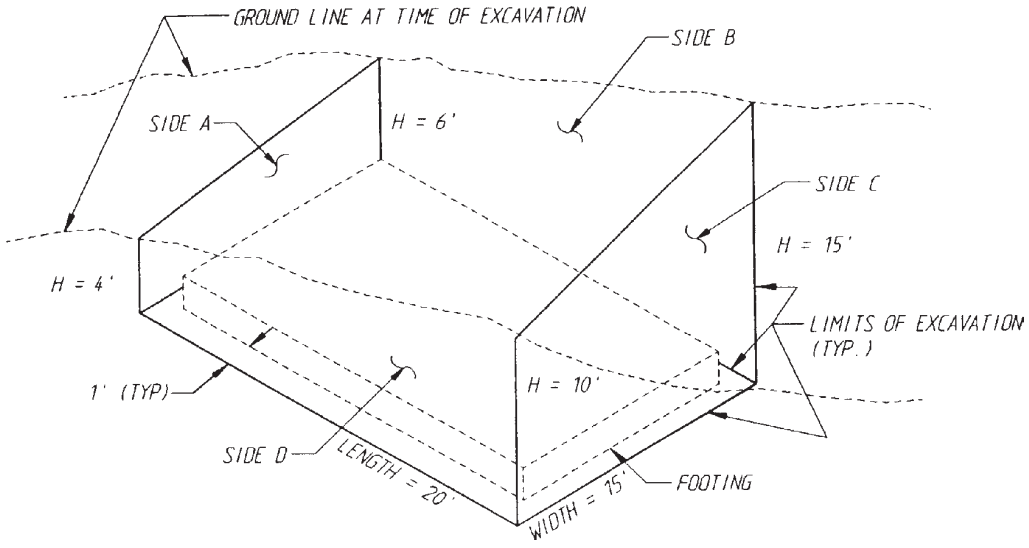

Sample Calculation:

For this pier (Figure 12.2.6-1):

Side A: average height = (4 + 6)/2 = 5 feet
width = 15 feet
area = 5 × 15 = 75 square feet

Side B: average height = (6 + 15)/2 = 10.5 feet
width = 20 feet
area = 10.5 × 20 = 210 square feet

Side C: average height = (10 + 15)/2 = 12.5 feet
width = 15 feet
area = 12.5 × 15 = 187.5 square feet

Side D: average height = (4 + 10)/2 = 7 feet
width = 20 feet
area = 7 × 20 = 140 square feet

For this example

Height Category	Area
less than 6 feet	75 square feet
6 feet to 10 feet	140 square feet
10 feet to 20 feet	210 + 188 = 398 square feet
greater than 20 feet	N.A.

These numbers would be entered on WSDOT Form 230-031 as follows:

Standard Item Number 4012	Item Use Standard Item	Item Description Shoring or Extra Excavation, Class A Dry: Average Overall Height	Quant. (Enter Total for Bridge Here)	Unit of Meas. L.S.
Pier	6 ft	6 ft to 10 ft	10 ft* to 20 ft	20 ft S.F.
Example	75 S.F.	140 S.F.	398 (11.5*) S.F.	— S.F.
	S.F.	S.F.	S.F.	S.F.
	S.F.	S.F.	S.F.	S.F.
	S.F.	S.F.	S.F.	S.F.

* Indicate Average Height

12.2.7 Piling

The piling quantities are to be measured and paid for in accordance with *Standard Specifications* Sections 6-05.4 and 6-05.5. Computation of piling quantities shall follow the same provisions.

Timber test piles are driven outside the structure limits and are extra or additional piling beyond the required number of production piling. See *Standard Specifications* Section 6-05.3(10).

Concrete or steel test piles are driven within the structure limits and take the place of production piling. In this case, the quantity for number and length of production piling is reduced by the number and length of test piling.

The quantity for "Furnishing _____ Piling _____" is the linear measurement of production piling below cut-off to the "estimated" pile tip (not "minimum" tip) specified in the Geotechnical Report. (Does not include test piles.)

The quantity for "Driving _____ Pile _____" is the number of production piling driven. (Does not include test piles.)

Pile tips are required if so specified in the Geotechnical Report. The tips on the test piles are incidental to the test pile; therefore, the number of pile tips reported on the Bridge Quantities Form 230-031 should not include the number of pile tips required on the test piles.

12.2.8 Conduit Pipe

It is WSDOT practice to embed two 2-inch diameter conduit pipes in all exterior concrete barriers constructed on bridges and retaining walls. The only exceptions to this practice are inside barriers of side-by-side twin bridges, and other project specific locations with the approval of the Bridge Design Engineer. Only WSDOT electrical systems may use these conduit pipes. Conduit pipes for other private utilities cannot be embedded in structure elements, and must be otherwise suspended or attached to the structure, in accordance with the franchise lease agreement negotiated between the private utility and the Region's Utility Engineer.

In accordance with *Standard Specifications* Section 8-20.1(1) and RCW 19.28.161, conduit pipe installation work is considered electrical work that can only be performed by licensed electricians. As such, conduit pipe quantities can only be included in electrical work bid items, such as electrical lump sum bid items for "Illumination System", "Traffic Signal System", and "Communication System", or stand-alone unit contract bid items for "Conduit Pipe 2 In. Diam." Conduit pipe quantities **cannot** be made incidental to structural bid items such as "Superstructure", "Traffic Barrier", "Pedestrian Barrier", etc.

For bridges and retaining walls in projects that also include other electrical system work for illumination, traffic signals, and ITS systems, the conduit pipes and their associated junction boxes shall be included in the lump sum bid item cost estimates for the appropriate electrical system lump sum bid item.

For bridge and retaining walls in projects without any electrical system work (e.g., the conduit pipes are isolated and will exist initially as spares), the conduit pipe quantity shall be calculated for "Conduit Pipe 2 In. Diam", per linear foot. The measurement shall be the sum of all conduit pipe through the barriers and into the ground mounted junction boxes buried off the ends of the bridge corners as shown in the traffic barrier standard details. Each conduit pipe shall terminate in a separate junction box as shown in these details.

12.2.9 Private Utilities Attached To Bridge Structures

As mentioned above, conduit pipes for private utilities cannot be embedded in structure elements, and must be otherwise suspended or attached to the structure, in accordance with the franchise lease agreement negotiated between the private utility and the Region's Utility Engineer.

Because attachment of private utilities to bridge structures are subject to franchise lease agreements, the construction costs for furnishing and installing these utilities, including all associated supports, need to be kept separate from other bid items. The only portion of the utilities and their supports that can be made incidental to structure bid items, such as "Superstructure" and "Bridge Deck" are the concrete inserts cast into the deck slab of the bridge. All other quantities for the private utilities, including the support rods, braces, and conduit pipes, shall be included in the associated bid item(s) established for each separate private utility, whether as a lump sum bid item, or measured by linear measurement. These separate bid item(s) for these private utilities are the responsibility of the Design PE Office.

The same practice applies to WSDOT conduit pipes when such conduit pipes for ITS or other systems are suspended or attached to the structure. Other than the concrete inserts for support of such WSDOT conduit pipes, all other quantities for external WSDOT conduit pipe systems shall be included in the appropriate WSDOT electrical system lump sum bid item, under the responsibility of the Design PE Office or the Region Traffic Design Office.

12.2.10 Drilled Shafts

Constructing shafts is measured by the linear foot. The linear measurement is calculated using the top of shaft elevation and the bottom of shaft elevation for each shaft as shown in the Plans. This quantity covers all elements of shaft construction (including excavation and casing and access tubes for non-destructive QA testing of shafts) except for rock excavation and shaft QA testing as outlined below.

Rock excavation for shaft including haul is measured by the cubic yards of shaft excavated. The cubic yards shall be calculated based on the shaft diameter shown in the Plans, the top of rock line, defined as the highest bedrock point within the shaft diameter, and the bottom of shaft elevation shown in the Plans. Shaft QA test is measured once for each shaft tested. For establishing bid item quantities for the Proposal, it is always assumed that each shaft will be eligible for testing, so the quantity becomes one for each shaft in the project.

12.3 Construction Costs

12.3.1 Introduction

The construction costs itemized in Appendix 12.3-A1, 12.3-A2, 12.3-A3, and 12.3-A4 are to aid the user in estimating the cost of bridge and structure projects. The costs are based on historical data maintained by the Bridge and Structures Office and retrieved from recent WSDOT Contracts.

Requests for cost estimates from WSDOT Region Offices and other Local Agency offices should be submitted in writing (hard copy or email) to the Bridge Project Support Unit, and a written or email response will be returned within a reasonable time based on the schedule needs of the requesting office. Scoping or prospectus type cost estimates, and other cost estimates based upon deck area cost history and other readily available geotechnical information and project parameters can be prepared relatively quickly. Estimates requiring input from the Bridge Design Unit, either for preparation of preliminary quantities or other preliminary structural analysis will take longer to prepare.

Telephone requests for cost estimates from WSDOT Region Offices and other Local Agency Offices shall be referred to the Bridge Project Support Unit for response.

All cost estimates prepared by the Bridge and Structures Office should have the concurrence of the Bridge Project Support Engineer.

12.3.2 Factors Affecting Costs

12.3.2.A Type of Structure

Many factors, as outlined in Section 2.2.3, must be considered in the selection of the type, size, and location of a bridge or wall.

Common structures with conventional details will be within the low end and mid-range of costs. Unique or complex structures will be within the high end.

12.3.2.B Location of Project Site

Projects in remote areas or with difficult access will generally be within or above the high end of the cost range.

12.3.2.C Size of Project Contract

Small projects tend to be within the high end of the cost range while large projects tend to be within the low end of the cost range.

12.3.2.D Foundation Requirements

Foundation requirements greatly affect costs. Water crossings requiring pier construction within the waterway are generally very expensive. Scour requirements can push the costs even higher. The earlier foundation information can be made available the more accurate the cost estimate will be. The Bridge Project Support Unit should be made aware of unusual foundation requirements or changes to foundation type as soon as possible for updating of the estimate.

12.3.2.E Sequencing of Project

Projects with stage construction, detours, temporary construction, etc., will be more expensive.

12.3.3 Development of Cost Estimates

Estimates prepared by the Bridge and Structures Office shall include 10 percent mobilization but not sales tax, engineering, construction contingencies, or inflation.

12.3.3.A Types

12.3.3.A.1 *Prospectus and Project Summary Estimates*

Conceptual cost estimates are prepared when little information about the project is available. Use the construction costs in Appendix A, assuming the worst case conditions, unless actual conditions are known. An example of a worst case condition is deep foundation substructure (pile supported footings or shaft foundations). In remote areas, or for small projects, use the high end of the cost range. Use mid-range costs for usual conditions.

To cover unforeseen project modifications, add a 20 percent estimate contingency to a prospectus estimate and a 10 percent estimate contingency to a project summary estimate. These contingencies can be adjusted depending on the preliminary information available.

12.3.3.A.2 *Preliminary Design Estimates*

Preliminary design estimates are prepared during the preliminary design stage when the type and size of bridge is known. Limited foundation information is sometimes available at this stage. The construction costs in Appendix A shall be used with an appropriate inflation factor, assuming the worst case conditions, unless foundation conditions are known, along with a minimum of 10 percent contingency to cover scope creep.

12.3.3.A.3 *Estimate Updates During Design*

During the design period, the designer should keep the Bridge Project Support Unit informed of significant changes to the design that might affect the cost. Examples of significant changes are: deeper than expected footing and seals, use of deep foundations (shafts or piles) when none were previously expected, change of substructure types, and changes to superstructure. This is a critical element in the project budgeting process.

12.3.3.A.4 *Contract Estimates*

The contract estimate is prepared by the Bridge Project Support Unit after the Plans and Final Quantities have been submitted to the Bridge Project Support Unit for preparation of the final Bridge PS&E. The contract estimate is prepared using the quantities furnished by the Bridge Design Unit, unit bid prices from Appendix A, other historical data, and the judgment of the engineer preparing the estimate. Unique, one-of-a-kind projects require special consideration and should include an appropriate construction cost contingency.

12.3.3.B Responsibilities

12.3.3.B.1 *Bridge Project Support Unit*

The Bridge Project Support Unit is responsible for preparing the prospectus, project summary, preliminary, and final contract estimates and updating the preliminary estimate as needed during the design phase of the project.

The Bridge Project Support Unit assists the WSDOT Region Offices and other outside Local Agency Offices, such as counties and cities, to prepare prospectus and project summary estimates when requested in writing.

12.3.3.B.2 *Designer*

The designer is responsible for providing preliminary quantities and final quantities to the Bridge Project Support Unit to aid in the updating of preliminary estimates and the preparation of contract estimates.

12.3.3.C Documentation

Whenever a cost estimate is prepared by the Bridge and Structures Office for an outside office, a Cost Estimate Summary sheet (Appendix 12.3-B1) shall be filled out by the Engineer preparing the estimate. The Cost Estimate Summary shall be maintained in the Job File. During the design stage, the summary sheet shall be maintained by the Bridge Design Unit. At a minimum, the Cost Estimate Summary should list the initial and all subsequent cost estimates for each Preliminary Plan distribution made. It is the Design Unit Manager's responsibility to ensure the summary sheet is up to date when the job file is submitted to the Bridge Project Support Unit for preparation of the Bridge PS&E.

12.3.3.D Cost Data

12.3.3.D.1 *General*

The Bridge costs summarized in Appendix A represent common highway, railroad, and water crossings. Consult the Bridge Project Support Unit for structures spanning across large rivers or canyons and other structures requiring high clearances or special design and construction features.

The square foot costs are useful in the conceptual and preliminary design stages when details or quantities are not available. The various factors affecting costs as outlined in Section 12.3.2 must be considered in selecting the square foot cost for a particular project. As a general rule, projects including none or few of the high-cost factors will be close to the mid-range of the cost figures. Projects including many of the high-cost factors will be on the high side. The user must exercise good judgment to determine reasonable costs. During the preliminary stage, it is better to be on the prudently conservative side for budgeting purposes.

12.3.3.D.2 *Deck or Wall Face Area*

The area to be used for cost estimates based upon deck or wall face area shall be computed as follows:

12.3.3.D.3 *Bridge Widenings and New Bridges*

The deck area of bridges is based on the actual width of the new portion of the bridge deck constructed (measured to the outside edge of the bridge deck) times the length, measured from end of wingwall to end of wingwall, end of curtain wall to end of curtain wall, or back to back of pavement seat if there are no wingwalls or curtain walls. Wingwalls are defined as walls without footings which are cast monolithically with the bridge abutment wall and may extend past the abutment footing. Curtain walls are defined as walls that are cast monolithically with the bridge abutment wall and footing and only extend to the edge of footing.

12.3.3.D.4 *Bridge Rail Replacement*

The bridge rail and curb removal is based on the total length of the rail and curb removed.

12.3.3.D.5 *Bridge Lengths With Unequal Wingwalls*

If a bridge has wingwalls or curtain walls of unequal length on opposite sides at a bridge end of wingwalls or curtain walls on one side of a pier only, the length used in computing the square foot area is the average length of the walls. If the wingwalls are not parallel to the centerline of the bridge, the measurement is taken from a projected line from the end of the wingwall normal to the centerline of the roadway.

12.3.3.D.6 *Retaining Walls*

If retaining walls (walls that are not monolithic with the abutment) extend from the end of the bridge, the cost of these walls is computed separately. The area of the wall is based on the overall length of the wall, and the height from the top of footing to the top of the wall.

12.4 Construction Specifications and Estimates

12.4.1 General

The Bridge Project Support Unit prepares the specifications and estimates (S&E) for all structural projects designed or reviewed by the Bridge and Structures Office. The preparation includes distributing review sets, reviewing the job file, plans, PS&E check list, "Not Included in Bridge Quantities List," and Geotechnical Report; preparing the cost estimates, specifications, and working day schedules; and submitting the PS&E package to the Region.

12.4.2 Definitions

12.4.2.A Standard Specifications

The *Standard Specifications* is published annually by the WSDOT Engineering Publications Office, is maintained by the WSDOT Construction Office, and is used as the governing construction specification for all WSDOT construction projects.

12.4.2.B Mandatory General Special Provisions

Mandatory General Special Provisions are revisions to specific sections of the *Standard Specifications*, which are enacted during the year period that a specific edition of the *Standard Specifications* is in force. Mandatory General Special Provisions are published throughout the year as immediate needs for specification additions and revisions arise.

12.4.2.C Special Provisions

Special Provisions are supplemental specifications and modifications to the *Standard Specifications*, which apply to a specific project.

12.4.2.D Addendum

A written or graphic document, issued to all bidders and identified as an addendum prior to bid opening, which modifies or supplements the bid documents and becomes a part of the contract.

12.4.2.E AD Copy

The AD copy is the contract document advertised to prospective bidders. The AD Copy may include, but not be limited to, the following as component parts: Bid Proposal Form, Special Provisions, Amendments, Plans, and Appendices including test hole boring logs, and environmental permit conditions.

12.4.2.F As defined in *Standard Specifications* Section 1-02.4

The order of precedence of AD Copy components is as follows: Addenda, Bid Proposal Form, Special Provisions (including Mandatory General Special Provisions, Plans, *Standard Specifications*, and *Standard Plans*.

12.4.3 General Bridge S&E Process

12.4.3.A Typical Reviews and Milestone Dates

The Ad Date, as established by the Region, is the anchor for all project schedule dates.

The Scope Of Work Agreement (SOW) is a document negotiated between the Design PE Office and the Bridge and Structures Office establishing the deliverables (design submittals) to be produced and the due dates for the various deliverable review milestones for the specific project.

The Structural Submittal Expectations Matrix at www.wsdot.wa.gov/publications/fulltext/ProjectMgmt/DEM/Bridge.pdf outlines the expected content of the design submittal deliverables at specific stages of design development.

When a Constructability Review is set by the SOW, the Bridge Design Unit or Bridge Consultant assigned to the project is responsible for providing the plan content specified by the design matrix, and providing the quantities based on preliminary foundation design sizes. The Bridge Project Support Unit is responsible for providing the cost estimate and a set of Special Provisions that includes all applicable General Special Provisions (GSPs). The GSPs with fill-ins need not have the fill-in text included at this time, and project specific Special Provisions need not be included at this time.

The Bridge Design Unit or Bridge Consultant shall coordinate with the Bridge Project Support Unit with enough lead time to allow completion of the cost estimate and Constructability Special Provisions in time for the Constructability Review submittal to the Region Design PEO.

For the PS&E Review Set turn-in, the Bridge Design Unit or Bridge Consultant assigned to the project shall provide completed plans and quantities to the Bridge Project Support Unit at least two-weeks in advance of the scheduled PS&E Review turn-in date. The Bridge Project Support Unit is responsible for developing a complete set of Special Provisions, with completed GSPs and project specific special provisions, and a complete cost estimate.

For hydraulic, mechanical, and electrical rehabilitation projects for movable bridges, the Bridge Preservation Office takes a lead role in managing the design process for the project.

12.4.3.B Constructability Review Set Distribution

The Bridge Specifications and Estimates Engineer assigned to the project distributes the Constructability Review set, consisting of PDFs of the Structure Plans, cost estimate, and assembled bridge special provision document (raw GSPs), and the Word document of the associated special provision runlist, to the following:

- Design Project Engineer
- Design PEO Team Leader
- Design PEO Designer
- Region Plans Office Reviewer
- Bridge Design Unit Supervisor
- Bridge Design Unit Team Leader/Designer

The Bridge Design Unit Team Leader/Designer and Bridge Specifications and Estimates Engineer for the project participate in the Constructability Review and coordinate to address review comments generated by the review.

12.4.3.C PS&E Review Set Distribution

The Bridge Specifications and Estimates Engineer assigned to the project distributes the PS&E Review set to the following:

- Design Project Engineer
- Design PEO Team Leader
- Design PEO Designer
- Region Plans Office Reviewer
- Region Design Engineering Manager or equivalent
- FHWA Washington Division Bridge Engineer
- Materials Laboratory (Record of Materials and PS&E Distribution mailbox)
- HQ Construction Office Bridge Engineer
- Bridge Project Support Manager
- Bridge Preservation Office (Review mailbox)
- Bridge Design Unit Supervisor
- Bridge Design Unit Team Leader/Designer
- State Bridge Design Engineer
- State Bridge and Structures Engineer
- Bridge Scheduler

The content of the distribution set is defined by Section 12.4.9.A.

The Bridge Design Unit Team Leader/Designer and Bridge Specifications and Estimates Engineer for the project participate in the PS&E Review and coordinate to address review comments generated by the review.

12.4.4 Reviewing Bridge Plans

The Bridge Specifications and Estimates Engineer performs the following tasks after receiving the Structure Plans and associated quantities from the Bridge Design Unit or Bridge Consultant in advance of the PS&E Review set distribution:

12.4.4.A Job File

Review correspondence and emails in the job file for the items of work and other commitments which need to be included in the Bridge PS&E. Identify items that need special provisions and bid item references. Identify items that require additional research by, and information from, the bridge designer, Region designers, or others. Confirm that the job file fly leaf information has been completed by the designer (Form 221-076).

12.4.4.B PS&E Check List (Form 230-037 and Appendix 12.4-A1)

Review the form as completed by the bridge designer for identified needs for special materials, construction requirements, permits, etc., which may need Special Provisions such as:

- Permits: United States Coast Guard
- Agreements: utilities on bridge, etc.
- Materials: high strength structural steel, high-strength concrete, polyester and polymer concrete, carbon fiber wrap, high-load elastomeric bearing pads and other high capacity bridge bearings, etc.

- Construction Requirements: temporary access, stage construction, construction over railroad, special welding and welding inspection requirements, and other special construction requirements
- Special Items: modified concrete overlay or special architectural, paint, and sealer treatments
- Proprietary Materials: identification of, and justification for use of, products and materials which are specified in the Structure Plans by specific manufacturer and model, instead of generic manufacture

12.4.4.C Summary of Quantities (Form 230-031 and Appendix 12.2-A1)

Verify that the Summary of Quantities is labeled as "Manager's Bridge Quantities." See Section 12.2.2. Quantities listed in this form are used to develop the Bridge Cost Estimate for the project.

12.4.4.D Plans

Review the plans for consistency with the special needs identified by the bridge designer in the PS&E check list form (subsection B above), use of standard notes and General Notes, completeness of title block information, and use of terminology consistent with the *Standard Specifications*, *Standard Plans*, and Standard Bid Items.

12.4.4.E Not Included in Bridge Quantities List (Form 230-038 and Appendix 12.1-A1)

Review the form completed by the bridge designer and compare with the Structure Plans for items shown in the Structure Plans that may be missing from the list. See Section 12.1.2.

12.4.4.F Geotechnical Report

Review the Geotechnical Report for the project to confirm that the foundation types, sizes, and elevations shown in the Bridge Plans are consistent with the recommendations specified in the Geotechnical Report. Obtain a copy of the final Geotechnical Report for the S&E file. Review the Geotechnical Report for construction consideration requirements which may need to be noted in the Special Provisions, such as shaft casing requirements, bridge embankment settlement periods, special excavation, etc. Compare the number of test holes and the locations shown in the layout sheets for all bridges against number and locations of test holes identified in the final Geotechnical Report.

12.4.5 Preparing the Bridge Cost Estimates

12.4.5.A General

From the quantities shown in the Summary of Quantities form submitted with the Structure Plans (whether for Constructability Review or PS&E Review), the Bridge Specifications and Estimates Engineer develops the Bridge Cost Estimate for the project. The Bridge Project Support Unit uses a standard spreadsheet format for Cost Estimates. This spreadsheet includes the tabulation of all bridge bid items, a breakdown for each lump sum item, and square foot cost of the structure.

12.4.5.B Procedure

Each quantity shown in the Summary of Quantities form is to be matched with an appropriate unit bid item or lump sum bid item. These can be Standard Bid Items from the Standard Bid Item Table, or project specific non-standard bid items.

Pricing for the bid items above can be based on the Construction Cost Estimating Aids listed in Appendices 12.3-A1, 12.3-A2, 12.3-A3, and 12.3-A4, bid tabulations from previous contracts, and the Unit Bid Analysis and Standard Item Table listing available through the WSDOT Contract Ad & Award Office web site. The Bridge Specifications and Estimates Engineer uses appropriate engineering judgment to make appropriate adjustments for inflation, site location, quantities involved, total of the work involved, etc.

All Standard Bid Items listed in the spreadsheet shall include the Standard Bid Item number assigned to that bid item. All non-standard bid items shall be identified by the appropriate pre-qualification code for the bid item work. The pre-qualification codes specified in the Standard Item Table should be reviewed to help establish the appropriate code for non-standard bid items. When in doubt, the general Bridge and Structures pre-qualification code of (B0) should be used.

All bridge cost estimates shall include mobilization, but do not include sales tax, engineering, contingencies or inflation.

12.4.6 Preparing the Bridge Specifications

12.4.6.A General

There are two categories of Special Provisions:

1. General Special Provisions (GSP's) are supplemental specifications which are standardized and approved for Statewide use, and maintained by the WSDOT Construction Office. GSP's are formatted to supplement specific *Standard Specifications* Sections. GSP's are identified by their publication and effective date in parenthesis immediately preceding the GSP text.
2. Project Specific Special Provisions include all supplemental specifications which are not GSP's. Project Specific Special Provisions, as the name implies, are intended for project specific use, whether one time or infrequent. The vast majority of Project Specific Special Provisions are formatted to supplement specific *Standard Specifications* Sections. However, in rare cases, they can be formatted as "stand-alone" following the "**Description/Materials/Construction Requirements/Measurement/Payment** format. Project Specific Special Provisions are identified by six asterisks in parenthesis immediately preceding the text or heading. A Project Specific Special Provision that sees frequent use can be standardized and elevated to GSP status.

12.4.6.B Procedure

Based on review of the Structure Plans and the PS&E Check List, the Bridge Specifications and Estimates Engineer determines the items of work which are not already covered by the *Standard Specifications* and for which supplemental specifications are needed. Based on this determination, and review of the current list of GSP's, a Bridge Special Provision runlist is prepared, listing the multi-character code of the applicable GSP documents needed for the project. GSP documents are listed in the WSDOT Construction Office web site.

These documents are listed following the section order of the *Standard Specifications*. Fill-in blanks for GSP's requiring project specific information can be completed at this time.

When the *Standard Specifications* and GSP's are insufficient to cover project specific requirements, Project Specific Special Provisions are developed, and added by name at the appropriate location in the runlist.

See the *Plans Preparation Manual* Division 6 for further discussion and example flow charts.

When the Bridge Special Provision file is complete with all Special Provisions needed to accompany the Structure Plans, the Bridge Specifications and Estimates Engineer compiles a single space document of the Bridge Special Provision file for use in the Bridge PS&E distribution.

12.4.7 Preparing the Bridge Working Day Schedule

12.4.7.A General

The Bridge Specifications and Estimates Engineer calculates the number of the working days necessary to construct the bridge portion of the contract, based on the quantities shown in the Summary of Quantities form submitted with the Bridge Plans, and enters the time in the special provision "Time for Completion." The working days are defined in the *Standard Specifications* Section 1-08.5.

12.4.7.B Procedure

The first task of estimating the number of working days is to list all the construction activities involved in the project. These include all actual construction activities such as excavation, forming, concrete placement, and curing; and the non-construction activities such as mobilization, material and shop plan approval. Special conditions such as staging, limited access near wetlands, limited construction windows for work in rivers and streams, limited working hours due to traffic and noise restrictions, require additional time.

The second task is to assign the number of working days to each construction activity above (see Appendix 12.4-A2). The "Construction Time Rate" table can be used as a guide to estimate construction time required. This table shows the average rate of output for a single shift, work day only. Adjustment to the rates of this table should be made based on project size, type of work involved, location of the project, etc. In general, larger project will have higher production rates than smaller projects, new construction will have higher production rates than widening, and unstaged work will have higher production rates than stages work.

The last step is to arrange construction activities, with corresponding working days, into a construction schedule on a bar chart, either by hand on the Construction Working Day Schedule Form 230-041 (see Appendix 12.4-B1) or by computer using a scheduling program. List the activities in a logical construction sequence, starting from the substructure to the superstructure. Items shall overlap where practical and the critical path shall be identified.

12.4.8 Reviewing Projects Prepared by Consultants

12.4.8.A General

Consultants preparing Structure Plans for WSDOT projects submit their Plans and quantities to the Bridge and Structures Office before the scheduled Bridge PS&E turn-in date, and with all associated information (files, forms, lists, and reports), as specified in Sections 12.4.3 and 12.4.4.

The package shall be in the same format as those prepared by the Bridge and Structures Office.

12.4.8.B Procedure

The Bridge Specifications and Estimates Engineer reviews the consultant's Structure Plans following the process as specified in Sections 12.4.3 and 12.4.4. The review comments of the Bridge Specifications and Estimates Engineer are combined with review comments from the Bridge Design Unit assigned to review the project, and returned to the consultant in a timely manner through the Bridge Consultant Liaison Engineer, allowing the consultant to meet the scheduled turn-in date for the Bridge PS&E. After the consultant addresses all review comments and resubmits the package as 100 percent complete, the Bridge Specifications and Estimates Engineer compiles the Bridge PS&E package (See Section 12.4.9).

Except for hydraulic, mechanical, and electrical rehabilitation projects for movable bridges, and other unique bridge projects where specifically approved by the Bridge Project Support Engineer, all Bridge Special Provisions shall be prepared by the Bridge Project Support Unit. The Bridge Cost Estimate and working day schedule should be prepared by the Bridge Specifications and Estimates Engineer with assistance from the consultant as appropriate.

12.4.9 Submitting the PS&E Package

12.4.9.A General

The PS&E package includes:

1. PDF of Bridge Construction Cost Estimate for each separate structure
2. PDF of Cost Estimate Summary for each separate structure (see Appendix 12.3-B1)
3. PDF of Not Included in Bridge Quantity List
4. PDF of Construction Working Day Schedule
5. PDF of compiled Bridge Special Provision document with runlist
6. Word document of individual project specific Bridge Special Provisions and GSPs with fill-ins, and Word document of the associated runlist
7. PDF of the Structure Plan Set for all Structures

The Bridge PS&E is distributed to those identified in Section 12.4.3.B.

12.4.10 PS&E Review Period and Turn-in for AD Copy

12.4.10.A Description

The PS&E Review Period between Bridge PS&E turn-in and Ad Date allows the Region to compile PS&E from their Design PE Office and all support groups into a Review PS&E set for distribution to appropriate parties for review and comment. The process ensures that all parts of the PS&E are compatible, complete, and constructible.

12.4.10.B Procedure

Each Region has its own specific process, but the general procedure is similar. The PS&E Review PS&E set is distributed to the Bridge Project Support Engineer or the Bridge Specifications and Estimates Engineer assigned to the project. The review is performed, and comments returned to the Region, by the due date specified in the distribution document. Review comments are returned to both the Region Plan Reviewer and the Region Design PE Team Leader/Designer assigned to the project.

Depending on the scope of the project, and the Region responsible for the project, there may be a meeting to discuss review comments. If such a meeting is held (generally about halfway through the PS&E review period), the Bridge Specifications and Estimates Engineer and others from the Bridge Design Unit responsible for the project, should consider attending if discussion of Bridge PS&E review comments is likely.

Shortly after the specified due date for review comments passes, Region comments on the Bridge PS&E should be received by the Bridge Specifications and Estimates Engineer and/or the bridge designer(s) in the Bridge Design Unit. These review comments on the Bridge PS&E are addressed before the final Bridge PS&E is turned-in for AD Copy printing. The Bridge Specifications and Estimates Engineer makes all necessary revisions to the Bridge Cost Estimate and Bridge Special Provisions, and notifies the appropriate contacts in the Region Design PE Office and the Region Plans Office when these changes are complete. This should be completed at least two weeks prior to the scheduled Ad Date.

After the Bridge Design Unit has completed all necessary revisions to the Structure Plans, the Structure Plans are signed and turned in to the Bridge Specifications and Estimates Engineer. The Bridge AD-Ready PS&E shall include the following:

1. Copies of the signed plans ready for digital certification to be initiated by the Region's Certification Sheet process.
2. Final set of bridge special provisions and the associated Certified Bridge Special Provisions and Cost Estimate document stamped and signed by the Bridge Specifications and Estimates Engineer
3. Electronic copies of all CAD files in DGN format.

This set of Bridge AD-Ready PS&E is the "Signed PS&E Set" deliverable of the Structural Submittal Expectations Matrix, and is sent to the Region (Region Plan Reviewer and Region Design PE Team Leader/Designer) for use in compiling the AD Copy PS&E. The Bridge Construction Support Engineer is also included in this email distribution as notice of the AD-Ready status of the project. This should be completed two weeks prior to the scheduled Ad Date.

12.5 Appendices

Appendix 12.1-A1	Not Included In Bridge Quantities List
Appendix 12.2-A1	Bridge Quantities
Appendix 12.3-A1	Structural Estimating Aids Construction Costs
Appendix 12.3-A2	Structural Estimating Aids Construction Costs
Appendix 12.3-A3	Structural Estimating Aids Construction Costs
Appendix 12.3-A4	Structural Estimating Aids Construction Costs
Appendix 12.3-B1	Cost Estimate Summary
Appendix 12.4-A1	Special Provisions Checklist
Appendix 12.4-A2	Structural Estimating Aids Construction Time Rates
Appendix 12.4-B1	Construction Working Day Schedule

Appendix 12.1-A1 Not Included In Bridge Quantities List

Washington State Department of Transportation

Not Included In Structure Quantities List

SR	Job Number	Project Title	
Designed By	Checked By	Date	Supervisor
Type of Structure			

The following is a list of items for which the Bridge and Structures Office is relying on the Region to furnish plans, specifications and estimates.

1.
2.
3.
4.
5.
6.
7.
8.
9.
10.
11.
12.
13.
14.
15.
16.
17.

DOT Form 230-038
Revised 07/2019

Appendix 12.2-A1 Bridge Quantities

Washington State Department of Transportation

Bridge Quantities

Bridge No. _____ Date _____

St. Item No.	Item Use	Item Description	Quantity	Unit of Measure
0001	Std. Item	Mobilization	_____	L.S.
0061	Std. Item	Removing Portion of Existing Bridge	_____	L.S.
0061		Type _____ Area SF/SM _____		
		Drilled Holes: Less than 12" long: / Greater than 12" long:		
		Number **Diameter** **Number** **Diameter** **Length**		
		_____ _____ Inch _____ _____ Inch _____ LF		
		_____ _____ Inch _____ _____ Inch _____ LF		
		_____ _____ Inch _____ _____ Inch _____ LF		
		Core Drilled Holes: *Less than 12" long*: / *Greater than 12" long:*		
		Number **Diameter** **Number** **Diameter** **Length**		
		_____ _____ Inch _____ _____ Inch _____ LF		
		_____ _____ Inch _____ _____ Inch _____ LF		
		_____ _____ Inch _____ _____ Inch _____ LF		
0071	Std. Item	Removing Existing Bridge	_____	L.S.
		Type _____ Area _____ SF		
0259	GSP Item	Work Access	_____	L.S.
		Type _____ Area _____ SF		
4001	GSP Item	Temporary Bridge	_____	L.S.
		Type _____ Area _____ SF/SM		
4006	Std. Item	Structure Excavation Class A Incl. Haul	_____	CY
		Dry (includes unsuitable if specified by Geotech Report		
		Pier **Soil**		
		_____ _____ CY		
		_____ _____ CY		
		_____ _____ CY		
		_____ _____ CY		
		Cofferdam:		
		Pier **Soil** **Rock**		
		_____ _____ CY _____ CY		
		_____ _____ CY _____ CY		
		_____ _____ CY _____ CY		
		_____ _____ CY _____ CY		
4010	Sp. Prov.	Special Excavation	_____	CY
		Pier **Soil**		
		_____ _____ CY		
		_____ _____ CY		
		_____ _____ CY		
		_____ _____ CY		

DOT Form 230-031
Revised 05/2017

Page 1 of 5

St. Item No.	Item Use	Item Description	Quantity	Unit of Measure
4013	Std. Item	Shoring or Extra Excavation Class A	_____	L.S.
		Dry:		
		AVERAGE OVERALL HEIGHT		
		Pier **<6 ft.** **6 ft. to 10 ft** **10 ft. to 20 ft*.** **>20 ft.***		
		_____ _____ SF _____ SF _____ SF _____ SF		
		_____ _____ SF _____ SF _____ SF _____ SF		
		_____ _____ SF _____ SF _____ SF _____ SF		
		_____ _____ SF _____ SF _____ SF _____ SF		
		COFFERDAM: AVERAGE OVERALL HEIGHT		
		PIER **<6 ft.** **6 ft. to10 ft** **0 ft. to 20 ft.*** **>20 ft.**		
		_____ _____ SF _____ SF _____ SF _____ SF		
		_____ _____ SF _____ SF _____ SF _____ SF		
		_____ _____ SF _____ SF _____ SF _____ SF		
		_____ _____ SF _____ SF _____ SF _____ SF		
		*INDICATE AVERAGE HEIGHT		
7070	GSP Item	Rock Bolt	_____	Each
7071	GSP Item	Rock Dowel Type	_____	Each
4008	Std. Item	Rock Excavation For Shaft Including Haul	_____	CY
Varies	Std. Item.	Constructing _____ FT. Diam. Shaft	_____	LF
Varies	Std. Item	Shaft - _____ In. Diameter		LF
4053	Std. Item	Furnishing Soldier Pile		LF
4160	Std. Item.	QA Shaft Test	_____	Each
0256	Std. Item	Removing Shaft Obstructions	_____	Est.
Varies	GSP Item	Preboring For _____ Pile	_____	LF
4060	Std. Item	Furnishing and Driving Concrete Test Pile	_____	Each
4070	Std. Item	Furnishing Conc. Piling - _____ Diameter	_____	LF
4080	Std. Item	Driving Conc. Pile		
4085	Std. Item	Furnishing and Driving Steel Test Pile	_____	Each
4090	Std. Item	Furnishing Steel Piling	_____	FM
4095	Std. Item	Driving Steel Pile	_____	Each
4100	Std. Item	Furnishing and Driving Timber Test Pile	_____	Each
4105	Std. Item	Furnishing Timber Piling - Untreated	_____	LF
4107	Std. Item	Furnishing Timber Piling _____	_____	LF
4108	Std. Item	Driving Timber Pile - Untreated	_____	Each
4111	Std. Item	Driving Timber Pile _____	_____	Each
4116	Std. Item	Pile Splice - Timber	_____	Each
8376	Std. Item	Furnishing Steel Pile Tip or Shoe	_____	Each
4130	Std. Item	Placing Prestressed Hollow Concrete Pile _____	_____	Each
4140	Std. Item	Driving Prestreessed Hollow Concrete Pile _____	_____	
--	Sp. Prov.	Pile Loading Test	_____	LF
		No. of Tests Each _____ Pile Size _____ Ton/Tonne		
4144	Std. Item	Epoxy-Coated St. Reinf. Bar For _____	_____	LB
4148	Std. Item	Epoxy-Coated St. Reinf Bar For Bridge	_____	LB
4149	Std. Item	St. Reinf. Bar For Bridge	_____	LB
4151	Std. Item	St. Reinf Bar for _____	_____	LB

DOT Form 230-031
Revised 05/2017

Page 2 of 5

St. Item No.	Item Use	Item Description	Quantity	Unit of Measure
4151	Std. Item	St. Reinf Bar for _____		LB
--	Sp. Prov.	Wire Mesh _____		SY
4166	Std. Item	Lean Concrete _____		CY
--	Std. Item	Conc. Class _____		CY
4322	Std. Item	Conc. Class 4000 for Bridge		CY
4202	Std. Item	Conc. Class 4000 for _____		CY
4200	Std. Item	Conc. Class 3000 for _____		CY
4325	Std. Item	Conc. Class 5000 for Bridge		CY
4205	Std Item	Conc. CLass 5000 for _____		CY
4324	Std. Item	Conc. Class 4000W for Bridge		CY
4204	Std. Item	Conc. Class 4000W for _____		CY
--	GSP Item	Conc. Class EA		CY
--	SP Prov.	Conc. Class HE		CY
4230	Std. Item	Structural Carbon Steel		LB
4235	Std. Item	Structural Low Alloy Steel		LB
4240	Std. Item	Structural High Strength Steel		LB
4246	Std. Item	Cast Steel		LB
4251	Std. Item	Forged Steel		LB
4256	Std. Item	Cast Iron		LB
4261	Std. Item	Malleable Iron		LB
4267	Std. Item	Ductile Iron		LB
4271	Std. Item	Cast Bronze		LB
4299	Std. Item	Lagging		SF
4280	Std. Item	Timber and Lumber - Untreated		MBM
4282	Std. Item	Timber and Lumber - Creosote Treated		MBM
4284	Std. Item	Timber and Lumber - Slats Treated		MBM
4300	Std. Item	Superstructure (for Concrete Bridges) Bridge Plan Area _____ SF		L.S.
4311	Std. Item	Bridge Deck (for Steel Bridges) Bridge Plan Area _____ SF		L.S.
6945	Std. Item	Conduit Pipe 2" Diam.		LF
4410	Std. Item	Bridge Railing Type _____		LF
4420	GSP Item	Bridge Grate Inlet		Each
7169	Std. Item	Structural Earth Wall		SF
--	Sp. Prov.	_____		_____
--	Sp. Prov.	_____		_____
5656	Std. Item	Bridge Approach Slab		SY

DOT Form 230-031
Revised 05/2017

Page 3 of 5

Breakdown of Items for Superstructure or Bridge Deck

St. Item No.	Item Use	Item Description	Quantity	Unit of Measure
--	Std. Item	Epoxy-Coated Steel Reinforcing Bar		LB
--	Std. Item	Epoxy-Coated Steel Reinforcing Bar (Traffic Barrier)		LB
--	Std. Item	Steel Reinforcing Bar		LB
--		Conc. Class _____		CY
--	Std. Item	Conc. Class 4000D		CY
--	Std. Item	Conc. Class 4000		CY
--	Std. Item	Conc. Class 5000		CY
--	Std. Item	Conc. Class _____ LS		CY
--	Std. Item	Structural Carbon Steel		LB
--	Std. Item	Structural Low Alloy Steel		LB
--	Std. Item	Structural High Strength Steel		LB
--	Std. Item	Cast Steel		LB
--	Std. Item	Cast Iron		LB
--	Std. Item	Malleable Iron		LB
--	Std. Item	Ductile Iron		LB
--	Std. Item	Cast Bronze		LB
--	Std. Item	Timber and Lumber - Untreated		MBM
--	Std. Item	Timber and Lumber - Creosote Treated		MBM
--	Std. Item	Timber and Lumber - Salts Treated		MBM
--	Sp. Prov.	Glulam Deck Panels		MBM
6945	Std. Item	Conduit Pipe 2" Diameter		LF
--	Std. Item	Bridge Railing Type _____		LF
--	Std. Item	Traffic Barrier		LF
4433	GSP. Item.	Modify Bridge Drain		Each
4434	GSP Item	Plugging Existing Bridge Drain		Each
4420	GSP Item	Bridge Grate Inlet		Each
Varies	GSP Item	Expansion Joint System		LF
		Type _____ Length _____ LF		
		Type _____ Length _____ LF		
		Type _____ Length _____ LF		
4444	GSP Item	Expansion Joint Modification		LF
		Type _____ Length _____ LF		
4232	Std. Item	Modified Concrete Overlay		CF
4233	Std. Item	Finishing and Curing Modified Concrete Overlay		SY
4456	Std. Item	Scarifying Concrete Surface		SY
	BSP Item	Polymer Concrete Overlay		SY
4465	Std. Item	Further Deck Preparation (for Type 1 Deck Repair)		SF
4467	Std. Item	Further Deck Preparation for Type 2 Deck Repair		SF
4451	Std. Item	Bridge Deck Repair Br No _____		SF
4455	Std. Item	Waterproof Membrame Br No _____		SY
5708	Std. Item	Removing Existing Overlay from Bridge Deck _____		SY
--	Sp. Prov.	Pot Bearing		Each
--	BSP Item	Disc Bearing		Each

DOT Form 230-031
Revised 05/2017

Page 4 of 5

--	BSP Item	Spherical Bearing	_____	Each
--	BSP Item	Cylindrical Bearing	_____	Each
--	Std. Item	Elastomeric Bering Pad (for pads only)	_____	Each
--	Sp., Prov.	Elastomeric Bearing Pad Assembly (for a fabricated assembly)	_____	Each
--	GSP Item	Fabric Pad Bearing	_____	Each
4269	Std. Item	Prestressed Conc. Girder _____	_____	LF
--	Std. Item	Prestressing	_____	LB
--	Sp. Prov.	Precast Segment	_____	LF
		Volume _____ CY/CM		
--	Sp. Prov.	_____	_____	_____
--	Sp. Prov.	_____	_____	_____

DOT Form 230-031
Revised 05/2017

Page 5 of 5

Appendix 12.3-A1 Structural Estimating Aids Construction Costs

UNIT COSTS

Before using these structure unit costs for any official WSDOT project cost estimate, contact the Bridge and Structures Office at 360-705-7201 to discuss the specific project criteria and constructability related risks, so an appropriate structures construction cost can be provided.

	UNIT	LOW	MEDIAN	HIGH ΔΔ
Prestressed Concrete Girders				
— Span 50 - 175 FT.				
Water Crossing w/piling	SF	$250.00	$300.00	$350.00
Water Crossing w/spread footings	SF	$200.00	$240.00	$270.00
Dry Crossing w/piling	SF	$230.00	$270.00	$320.00
Dry Crossing w/spread footings	SF	$180.00	$220.00	$250.00
Reinforced Concrete And Post-Tensioned				
Concrete Box Girder — Span 50 - 200 FT.				
Water Crossing w/piling	SF	$280.00	$320.00	$350.00
Water Crossing w/spread footings	SF	$230.00	$270.00	$300.00
Dry Crossing w/piling	SF	$260.00	$300.00	$330.00
Dry Crossing w/spread footings	SF	$210.00	$250.00	$280.00
Reinforced Concrete Flat Slab	SF	$230.00	$280.00	$330.00
— Span 20 - 60 FT.				
Prestressed Concrete Slabs	SF	$200.00	$250.00	$300.00
— Span 13 - 69 FT.				
Prestressed Concrete Decked Bulb -Tee Girder	SF	$220.00	$270.00	$320.00
— Span 40 - 115 FT.				
Steel Girder — Span 60 - 400 FT.	SF	$230.00	$270.00	$330.00
Steel Box Girder — Span 300 - 700 FT.	SF		$350.00	
Steel Truss — Span 300 - 700 FT.	SF		$380.00	
Steel Arch — Span 30 - 400 FT.	SF		$450.00	
Precast Reinforced Concrete Box Culvert	SF	$50.00	$65.00	$80.00
(Interior Surface Area) 20 Foot Span and Greater				
Precast Reinforced Concrete Split Box Culvert	SF	$45.00	$70.00	$90.00
(Interior Surface Area) 20 Foot Span and Greater				
Precast Reinforced Concrete Three Sided Structure	SF	$50.00	$75.00	$100.00
(Interior Surface Area) 20 Foot Span and Greater				
Bridge Approach Slab	SY		$250.00	
Concrete Bridge Removal	SF	$20.00	$35.00	$50.00
Widening Existing Concrete Bridges (Including Removal)	SF	$175.00	$200.00	$300.00
Railroad Undercrossing — Single Track	LF	* $9,000.00 (Steel Underdeck Girder)		
		* $11,000.00 (Steel Thru-Girder)		
Railroad Undercrossing — Double Track	LF	* $14,000.00		
Pedestrian Bridge — Reinforced Concrete	SF	$400.00	$550.00	$700.00
Reinforced Concrete Rigid Frame (Tunnel)	SF		* $100.00	
Replace Existing Curbs & Barrier With	LF	$220.00	$280.00	$350.00
Safety Shape Traffic Barrier (Including Removal)				
Reinforced Concrete Retaining Wall (Exposed Area)	SF	$55.00	$75.00	$90.00

UNIT COSTS

Before using these structure unit costs for any official WSDOT project cost estimate, contact the Bridge and Structures Office at 360-705-7201 to discuss the specific project criteria and constructability related risks, so an appropriate structures construction cost can be provided.

	UNIT	LOW	MEDIAN	HIGH ΔΔ
SE Wall — Welded Wire	SF	$20.00	$30.00	$40.00
SE Wall — Precast Conc. Panels or Conc. Block	SF	$30.00	$40.00	$50.00
SE Wall — CIP Conc. Fascia Panels (Special Design)	SF	$40.00	$50.00	$60.00
Permanent Geosynthic Wall w/ Shotcrete Facing	SF	$20.00	$35.00	$50.00
Permanent Geosynthic Wall w/ Concrete Fascia Panel	SF	$30.00	$45.00	$60.00
Soil Nail Wall	SF	$80.00	$100.00	$130.00
Shotcrete Facing	SF	$20.00	$30.00	$40.00
Concrete Fascia Panel	SF	$30.00	$40.00	$50.00
Soldier Pile Wall (Exposed Area)	SF	$100.00	$120.00	$130.00
Soldier Pile Tieback Wall (Exposed Area)	SF	$140.00	$160.00	$200.00
Concrete Crib Wall Concrete Headers	SF	$40.00	$50.00	$60.00

*Based on limited cost data. Check with the Bridge Project Support Engineer.

Bridge areas are computed as follows:
Typical Bridges: Width x Length

Width: Total width of Deck, including portion under the barrier.
Length: Distance between back of pavement seats, or for a Bridge having Wingwalls, 3'-0" behind the top of the embankment slope; typically end of Wingwalls to end of Wingwalls, reference Standard Plans H9.

Special Cases:

Widenings - Actual area of new construction.

Tunnel - Outside dimension from top of footing to top of footing over the tunnel roof, i.e., including walls and top width.

ΔΔ For small jobs (less than $100,000), use the high end of the cost range as a starting point.

(Note: Unit structure costs include mobilization but do not include **sales tax, engineering, or contingency)**

SPECIAL NOTE:
These cost estimate aids do not account for recent effects due to inflation, labor and equipment shortages, supply chain issues, and other environmental and economic factors.

For the most recent bid history see:

Unit Bid Analysis
https://wsdot.wa.gov/engineering-standards/design-topics/engineering-applications/unit-bid-analysis

Bid Tabulations
https://wsdot.wa.gov/business-wsdot/how-do-business-us/public-works-contracts/public-works-contract-history/bid-tabulations

Appendix 12.3-A2 Structural Estimating Aids Construction Costs

SUBSTRUCTURE

BID ITEMS	UNIT	UNIT COST LOW		HIGH ΔΔ
Structure Excavation Class A Incl. Haul				
Earth	CY	$12.00	—	$30.00
Rock	CY	$100.00	—	$220.00
Inside Cofferdam — Earth	CY	$22.00	—	$33.00
— Rock	CY	$110.00	—	$190.00
Shoring Extra Excavation Class A				
Dry — Depth under 6′	SF	$3.00	—	$8.00
Dry — 6′ - 10′	SF	$7.00	—	$11.00
Dry — 10′ - 20′	SF	$11.00	—	$22.00
Cofferdam	SF	$30.00	—	$40.00
Preboring For Standard Piles	LF	$35.00	—	$60.00
Furnishing & Driving Test Piles				
Concrete	EACH	$5,000.00	—	$10,000.00
Steel	EACH	$4,000.00	—	$8,000.00
Timber	EACH	$2,000.00	—	$3,000.00
Furnishing Piling				
Conc. _____ Dia.	LF	$35.00	—	$45.00
Steel — TYP HP 12x53	LF	$30.00	—	$35.00
Timber — Creosote Treated	LF	$10.00	—	$12.00
Timber — Untreated	LF	$8.00	—	$10.00
** Pile Tip				
CIP Concrete (Steel Casing — Short Tip)	EACH	$200.00	—	$250.00
CIP Concrete (Steel Casing — 10 Stinger)	EACH	$4,500.00	—	$5,500.00
Steel (H-Pile)	EACH	$120.00	—	$220.00
Timber (Arrow Tip)	EACH	$25.00	—	$45.00
Driving Piles (40′ - 70′ Lengths)				
Concrete _____ Dia.	EACH	$500.00	—	$1,000.00
Steel	EACH	$350.00	—	$800.00
Timber	EACH	$225.00	—	$450.00

SUBSTRUCTURE

BID ITEMS	UNIT	UNIT COST LOW		HIGH ΔΔ
Shafts				
Constructing — Ft. Diam Shaft (4' to 6' Dia.)	LF	$500.00	—	$1,400.00
Constructing — Ft. Diam Shaft (8' to 12' Dia.)	LF	$1,500.00	—	$2,500.00
Rock Excavation For Shaft Including Haul	LF	$400.00	—	$1,000.00
QA Shaft Test	EACH	$1,000.00	—	$3,000.00
Removing Shaft Obstructions	EST	5% of all of above shaft ____		
St. Reinf. Bar For Bridge	LBS	$1.00	—	$1.30
Epoxy-Coated St. Reinf. Bar For Bridge	LBS	$1.20	—	$1.70
Conc. Class 4000W	CY	$250.00	—	$400.00
Conc. Class 4000P	CY	$250.00	—	$400.00
Conc. Class 4000 (Footings)	CY	$400.00	—	$600.00
Conc. Class 4000 (Abut. & Ret. Walls)	CY	$450.00	—	$650.00
Conc. Class 5000	CY	$550.00	—	$750.00
Lean Concrete	CY	$200.00	—	$250.00
Conc. Class 4000P (CIP Piling)	CY	$200.00	—	$250.00

ΔΔ For small jobs (less than $100,000), use the high end of the cost range as a starting point.
** Pile ultimate capacity will affect these prices. Confirm with Bridge Project Support Engineer.

See SPECIAL NOTE on Appendix 12.3-A1 for updates and additional resources on unit costs.

Appendix 12.3-A3 Structural Estimating Aids Construction Costs

SUPERSTRUCTURE

BID ITEMS	UNIT	UNIT COST LOW	UNIT COST HIGH ΔΔ
Elastomeric Bearing Pads			
Girder Seat	EACH	$150.00	$200.00
Girder Stop	EACH	$100.00	$150.00
Bearings - Spherical and Disc (In place with plates)	KIP	$15.00	$18.00
Fabric Pad Bearing (In place, including all plates, TFE, etc.)	EACH	$2,000.00	$3,000.00
Wide Flange Prestressed Concrete Girder			
WF42G	LF	$250.00	
WF50G	LF	$275.00	
WF58G	LF	$300.00	
WF74G	LF	$325.00	
W83G	LF	$350.00	
W95G	LF	$400.00	
Spliced Prestressed Concrete I Girder			
WF74PTG	LF	$250.00	
W83PTG	LF	$275.00	
W95PTG	LF	$300.00	
Bulb Tee Girder			
WBT32G	LF	$250.00	
WBT38G	LF	$275.00	
WBT62G	LF	$300.00	
Trapezodial Tub Girder			
U54G4	LF	$500.00	
U54G5	LF	$510.00	
U54G6	LF	$520.00	
U66G4	LF	$530.00	
U66G5	LF	$540.00	
U66G6	LF	$560.00	
U78G4	LF	$570.00	
U78G5	LF	$580.00	
U78G6	LF	$600.00	
Wide Flange Trapezodial Tub Girder			
UF60G4	LF	$520.00	
UF60G5	LF	$530.00	
UF60G6	LF	$540.00	
UF72G4	LF	$550.00	
UF72G5	LF	$560.00	
UF72G6	LF	$570.00	
UF84G4	LF	$580.00	
UF84G5	LF	$590.00	
UF84G6	LF	$600.00	

SUPERSTRUCTURE

BID ITEMS	UNIT	UNIT COST LOW	UNIT COST HIGH ΔΔ
Structural Carbon Steel (Steel girder, when large amount of steel is involved)	LBS	$1.80	$2.80
Structural Low Alloy Steel (Steel girder, when large amount of steel is involved)	LBS	$2.00	$3.00
Structural Steel (Sign supports, when small amounts of steel is involved)	LBS	$7.00	$10.00
Timber & Lumber	MBM	$2,000.00	$2,800.00
Creosote Treated	MBM	$2,250.00	$3,000.00
Salts Treated	MBM	$1,500.00	$2,000.00
Untreated	MBM	$1,750.00	$2,250.00
Lagging (in place) Treated	SF	$15.00	$30.00
Expansion Joint Modification (Remove and Replace Headers Only - Add Exp. Jt. System Costs below)	LF	$400.00	$600.00
Expansion Joint System			
Compression Seal	LF	$100.00	$150.00
Modular (Approx. $100 per inch of movement)	LF	$1,500.00	$3,500.00
Strip Seal	LF	$300.00	$600.00
Rapid Cure Silicone	LF	$50.00	$80.00
Bridge Drains	EACH	$400.00	$600.00
Bridge Grate Inlets	EACH	$1,500.00	$2,000.00
Conc. Class 5000	CY	$900.00	$1,200.00
Conc. Class 5000 (Segmental Constr.)	CY	$1,000.00	$1,500.00
Conc. Class 4000D (Deck Only)	CY	$1,000.00	$1,800.00
Conc. Class 4000	CY	$800.00	$1,500.00
Conc. Class EA (Exposed Aggregate)	CY	$500.00	$600.00
St. Reinf. Bar	LBS	$1.00	$1.50
Epoxy-Coated St. Reinf. Bar	LBS	$1.25	$1.75
Post-tensioning Prestressing Steel (Includes Anchorages)	LBS	$6.00	$8.00
Traffic Barrier	LF	$120.00	$160.00
Bridge Railing Type BP & BP-S	LF	$60.00	$100.00
Beam Guardrail Type Thrie Beam	LF	$60.00	$85.00
Modified Conc. Overlay	CF	$20.00	$40.00
Furnishing and Curing Modified Conc. Overlay	SY	$25.00	$65.00
Scarifying Conc. Overlay (½-inch)	SY	$70.00	$90.00
Polymer Concrete	SY	$90.00	$150.00
Polyester Concrete	CF	$140.00	$250.00
Scarifying Concrete Overlay (2-inch or more)	SY	$120.00	$200.00
Removing Existing Overlay From Bridge Deck			
Less Than 100 SY	SY	$40.00	$80.00
100 SY to 200SY	SY	$30.00	$70.00
Greater Than 200 SY	SY	$15.00	$50.00
Waterproof Membrane			
Less Than 100 SY	SY	$40.00	$60.00
100 SY to 200SY	SY	$25.00	$40.00
Greater Than 200 SY	SY	$15.00	$25.00

ΔΔ For small jobs (less than $100,000), use the high end of the cost range as a starting point.

See SPECIAL NOTE on Appendix 12.3-A1 for updates and additional resources on unit costs.

Appendix 12.3-A4 Structural Estimating Aids Construction Costs

MISCELLANEOUS

BID ITEMS	UNIT	UNIT COST LOW	UNIT COST HIGH ΔΔ
Conduit Pipe 2" Diameter	LF	$10.00	$15.00
Sign Support (Brackets, Mono, or Truss Sign Bridges)	LBS	$7.00	$10.00
Concrete Surface Finishes			
Fractured Fin Finish	SY	$20.00	$30.00
Exposed Aggregate Finish (Requires the use of concrete Class EA)	SY	$20.00	$25.00
Pigmented Sealer	SY	$7.00	$10.00
Painting Existing Steel Bridges (Lead Base)	S.F.	$35.00	$50.00
Painting New Steel Bridges	LBS (Steel)	$0.12	$0.15
Mobilization	Sum of Items	10%	
Masonry Drilling Δ			
Holes up to 1'-0" in depth			
1" Diameter	EACH	$30.00	
1 ½" Diameter	EACH	$35.00	
2" Diameter	EACH	$40.00	
2 ½" Diameter	EACH	$42.00	
3" Diameter	EACH	$44.00	
3 ½" Diameter	EACH	$46.00	
4" Diameter	EACH	$52.00	
5" Diameter	EACH	$54.00	
6" Diameter	EACH	$70.00	
7" Diameter	EACH	$90.00	
Δ For holes greater than 1'-0" in depth and up to 20'-0" in depth, use 1.5 x above prices. If drilling through steel reinforcing, add $16.00 per lineal inch of steel drilled.			
Removal of Rails and Curbs	LF	$90.00	$140.00
Removal of Rails, Curbs, and Slab	SF	$30.00	$60.00
Plugging Existing Bridge Drain	EACH	$350.00	
Bridge Deck Repait	S.F.	$150.00	$350.00

ΔΔ For small jobs (less than $100,000), use the high end of the cost range as a starting point.

See SPECIAL NOTE on Appendix 12.3-A1 for updates and additional resources on unit costs.

Appendix 12.3-B1 Cost Estimate Summary

SR 162 7002 Carbon
River Bridge 162/14

Date of Transmittal	Estimate of Cost	Assume Accuracy %	Estimate Made By	Available Data							Copies Sent To			Remarks
				Field Data (Dated)	Date Layout Made	Foundation Date Rec.	Preliminary Quantities	Final Quantities	Estimate By Sq. Ft. Area	District	Design Branch	Program Development	
10-2-91	$517,000.00	±15%	DMJ	8-91			—		✓	3	✓	✓	Please See Cover Transmittal
1-9-92	$692,000.00	±10%	LHT					✓		✓	✓	✓	

Appendix 12.4-A1 Special Provisions Checklist

Washington State Department of Transportation

Special Provisions Checklist

SR	Job No.	Project Title		
Design By		Check By	Date	Supervisor
Type of Structure				

Instructions:
- [X] Check items pertaining to this structure
- [X] _____ Note other items with "X" in box and fill in blank line
- [ ] Leave blank if it **DOES NOT** pertain to this structure

A. Permits and Regulations
- [ ] Coast Guard
- [ ] _____

B. Railroads
- [ ] Railroad Bridge
- [ ] Railroad in Vicinity
- [ ] _____

C. Order of Work
- [ ] Approach embankment settlement period
- [ ] Stage construction sequence
- [ ] _____

D. Traffic Control
- [ ] Reduction in traffic lanes
- [ ] Traffic within _____ feet of new construction
- [ ] Traffic detoured, no traffic on bridge
- [ ] One way traffic on bridge
- [ ] _____

E. Utilities and Existing Pavement
- [ ] Utilities on Bridge, type _____
- [ ] Existing utilities in vicinity of construction
- [ ] Existing pavement in vicinity of construction
- [ ] _____

F. Falsework
- [ ] Falsework opening over existing roadway
- [ ] Falsework opening over railroad
- [ ] Falsework opening over water
- [ ] Protection of falsework
- [ ] Supported from existing structure
- [ ] Not supported from existing structure
- [ ] Special falsework release sequence required
- [ ] _____

DOT Form 230-037 EF
Revised 07/2011

G. Foundation

- ☐ Excavation near existing pavement
- ☐ Excavation near railroad track or facilities
- ☐ Concrete Seals
- ☐ Seal construction using a berm
- ☐ Cofferdams
- ☐ Pumping water from foundation excavation required
- ☐ Riprap at piers
- ☐ Removal of unsuitable material
- ☐ Rock excavation requiring threshold limit value
- ☐ Special Excavation
- ☐ _____

H. Forms

- ☐ Special forms for architectural treatment
- ☐ Fractured Fin Finish
- ☐ Variable depth random board finish
- ☐ 3/4 inch random board finish
- ☐ Remove forms from cells which have access (Box grider)
- ☐ _____

I. Piles

- ☐ Concrete test pile
- ☐ Concrete piling ____ inch diameter
- ☐ Steel test pile
- ☐ Steel piling _____
- ☐ Timber Test Pile
- ☐ Timber piling
- ☐ Pile loading test
- ☐ Pile minimum tip elevations
- ☐ Pile splice
- ☐ Pile tip
- ☐ Preboring for pile
- ☐ Driving piles in highly developed business or residential areas
- ☐ Excavation for pile
- ☐ Driving from existing structure
- ☐ No driving from existing structure
- ☐ Overdriving of piles
- ☐ _____

J. Shafts

- ☐ Required permanent casing
- ☐ Required temporary casing
- ☐ Casing shoring
- ☐ Shaft Seal
- ☐ CSL access tubes
- ☐ _____

DOT Form 230-037 EF
Revised 07/2011

K. Prestressed Concrete Griders

- ☐ Epoxy - coated prestressing steel
- ☐ Temporary strands
- ☐ f'c 28 days > 8,500 psi
- ☐ Precast prestressed member
- ☐ Spliced prestressed concrete girder
- ☐ Prestressed concrete tub girder
- ☐ _____

L. Superstructure

- ☐ Concrete class
- ☐ Post - tensioning tendons
- ☐ Elastomeric bearing pads (pad only)
- ☐ Elastomeric bearing pad assembly (fabricated assembly)
- ☐ Fabric pad bearing
- ☐ Disc bearing
- ☐ Spherical bearing
- ☐ Cylindrical bearing
- ☐ Electrical Conduit
- ☐ Expansion joint
- ☐ _____

M. Steel Structure

- ☐ Structural Carbon Steel
- ☐ Structural Low Alloy Steel
- ☐ Structural H.S. Steel
- ☐ Steel Casting
- ☐ A - 307 Fasteners
- ☐ M - 164 Fasteners
- ☐ F-1554 Fasteners
- ☐ Shop Assembling
- ☐ Notch Toughness Requirements
- ☐ Application of Paint - Color No. _____
- ☐ Steel Erection
- ☐ _____

N. Timber Structures

- ☐ Untreated
- ☐ Creosote treated
- ☐ Salt treated
- ☐ Glulam deck panels
- ☐ Type and grade of timber
- ☐ Fire prevention requirement needed
- ☐ _____

DOT Form 230-037 EF
Revised 07/2011

O. Signing and Lighting

- ☐ Navigation lighting system
- ☐ Temporary navigation light
- ☐ Sign bridge on structure
- ☐ Cantilever sign structure on bridge
- ☐ Bridge mounted sign brackets
- ☐ _____

P. Drainage System

- ☐ Special bridge drains
- ☐ Bridge grate inlets
- ☐ Downspout
- ☐ _____

Q. Surface Finish

- ☐ Fractured fin finish
- ☐ Sandblast finish
- ☐ Variable depth random board finish
- ☐ 3/4 inch random board finish
- ☐ Pigmented sealer
- ☐ _____

R. Special Classes of Concrete

- ☐ Concrete Class EA
- ☐ Concrete Class HE
- ☐ _____

S. Bridge Widening or Replacement

- ☐ Complete removal of existing structure
- ☐ Removing portions of existing structure
- ☐ Salvage Materials, storage site _____ , salvage item _____
- ☐ Coating contrete surface with epoxy resin
- ☐ Drilling holes
- ☐ Core drilled holes
- ☐ Set rebar with epoxy
- ☐ Use of rockbolts or rock anchors
- ☐ Grout, comp. strength _____ psi at ____ day, location _____
- ☐ As built Plans of existing structure available for bidder's inspection
- ☐ HMA overlay
- ☐ LMC overlay
- ☐ Polyester concrete overlay
- ☐ Bridge deck repair
- ☐ Further deck preparation
- ☐ Explosive prohibited
- ☐ Explosives allowed
- ☐ _____

DOT Form 230-037 EF
Revised 07/2011

T. Waterproofing

- ☐ Membrane waterproofing (Deck Seal)
- ☐ _____

U. Miscellaneous Items

- ☐ Temporary oak blocks
- ☐ Poured rubber
- ☐ Expaned polstyrene
- ☐ Plastic waterstops
- ☐ Expanded rubber
- ☐ Butyl rubber sheeting
- ☐ Grout, comp. strength ___ psi at _____ day, location _____
- ☐ Electrical conduit
- ☐ _____

V. Metal Bridge Railing

- ☐ Bridge Railing Type BP
- ☐ Bridge Railing Type _____
- ☐ _____

W. Repair Work

- ☐ Epoxy Crack Sealing
- ☐ Timber Redecking
- ☐ Concrete Deck Repair
- ☐ _____

X. Other Items

- ☐ Ceramic Tiles
- ☐ Sturctural Earth Wall
- ☐ Tieback Wall
- ☐ Noise Barrier Wall
- ☐ Winter Conditions
- ☐ Work Access
- ☐ Work hours or seasonal restrition
- ☐ Work Bridge
- ☐ Detour Bridge
- ☐ _____

DOT Form 230-037 EF
Revised 07/2011

Appendix 12.4-A2 Structural Estimating Aids Construction Time Rates

Operation	Units**	Min. Output	Ave. Output	Max. Output
Substructure				
Structure Exc. & Shoring	CY/DAY	20	80	150
*Seals	CY/DAY	10	15	20
*Footings	CY/DAY	6	10	14
*Abutment Walls	CY/DAY	4	7	19
*Wingwalls	CY/DAY	1	1.5	2
*Retaining Walls with Footings	CY/DAY	4	11	17
*Columns	CY/DAY	3	4	8
Falsework for X-beams	CY/DAY	4	10	13
*X-beams	CY/DAY	16	18	20
Furnishing Piles				
Precast Concrete	DAYS	40	30	20
Cast-in-Place Concrete	DAYS	15	5	2
Steel	DAYS	30	10	2
Timber	DAYS	20	5	2
Driving Piles				
Driving Test Piles	EACH/DAY	1	1	2
Concrete	LF/DAY	100	150	200
Steel	LF/DAY	100	150	200
Timber	LF/DAY	100	150	200
Shafts	DAYS	2	3	4
Soldier Pile Walls				
Driving Soldier Pile	DAYS	2	3	4
Permanent Ground Anchor	EACH	1	4	10
Timber Lagging	MBM/DAY	1	2	4
Concrete Fascia Panel	SF/DAY	100	800	1500
Soil Nail Walls				
Soil Nail	EACH	1	4	10
Shotcrete Facing	SF/DAY	1200	3000	6000
Superstructure				
Prestressed Girders				
Girder Fabrication	DAYS	70	45	35
Set Girders	LF/DAY	200	550	1,450
*Slab & Diaphragms	CY/DAY	6	11	18

*Concrete

**All times are based on a single crew with 8-hour work DAYS

Operation	Units**	Min. Output	Ave. Output	Max. Output
Box Girders				
Span Falsework	SF/DAY	150	700	900
*Bottom Slab	CY/DAY	3	8	11
*Webs, Diaphragms, and X-beams	CY/DAY	5	18	25
*Top Slab	CY/DAY	7	9	12
Stress and Grout Strands	LBS/DAY	4,500	6,000	8,000
Strip Falsework	SF/DAY	1,500	2,200	3,000
T-Beam				
Span Falsework	SF/DAY	500	700	1,000
*Girders, Diaphragms, and Slab	CY/DAY	6	10	15
Strip Falsework	SF/DAY	1,000	1,500	2,000
Flat Slab				
Span Falsework	SF/DAY	100	250	600
*Slab and X-beams	CY/DAY	6	10	15
Strip Falsework	SF/DAY	300	500	1,000
Steel Girder				
Girder Fabrication	DAYS	200	150	110
Girder Erection	LF/DAY	50	100	200
*Slab	CY/DAY	6	10	15
Painting	SF/DAY	1,000	2,000	3,000
Miscellaneous				
*Traffic Barrier	LF/DAY	20	40	80
*Traffic Railing & Sidewalk	LF/DAY	15	35	60
*SEW Traffic Barrier	LF/DAY	15	35	60
*Concrete Deck Overlay	SY/DAY	200	250	300
Expansion Joint Replacement	DAYS/LANE CLOSURE	8	6	4
Bridge Rail Retrofit	LF/DAY	50	100	200

* Concrete

** All times are based on a single crew with 8-hour work DAYS

Appendix 12.4-B1 Construction Working Day Schedule

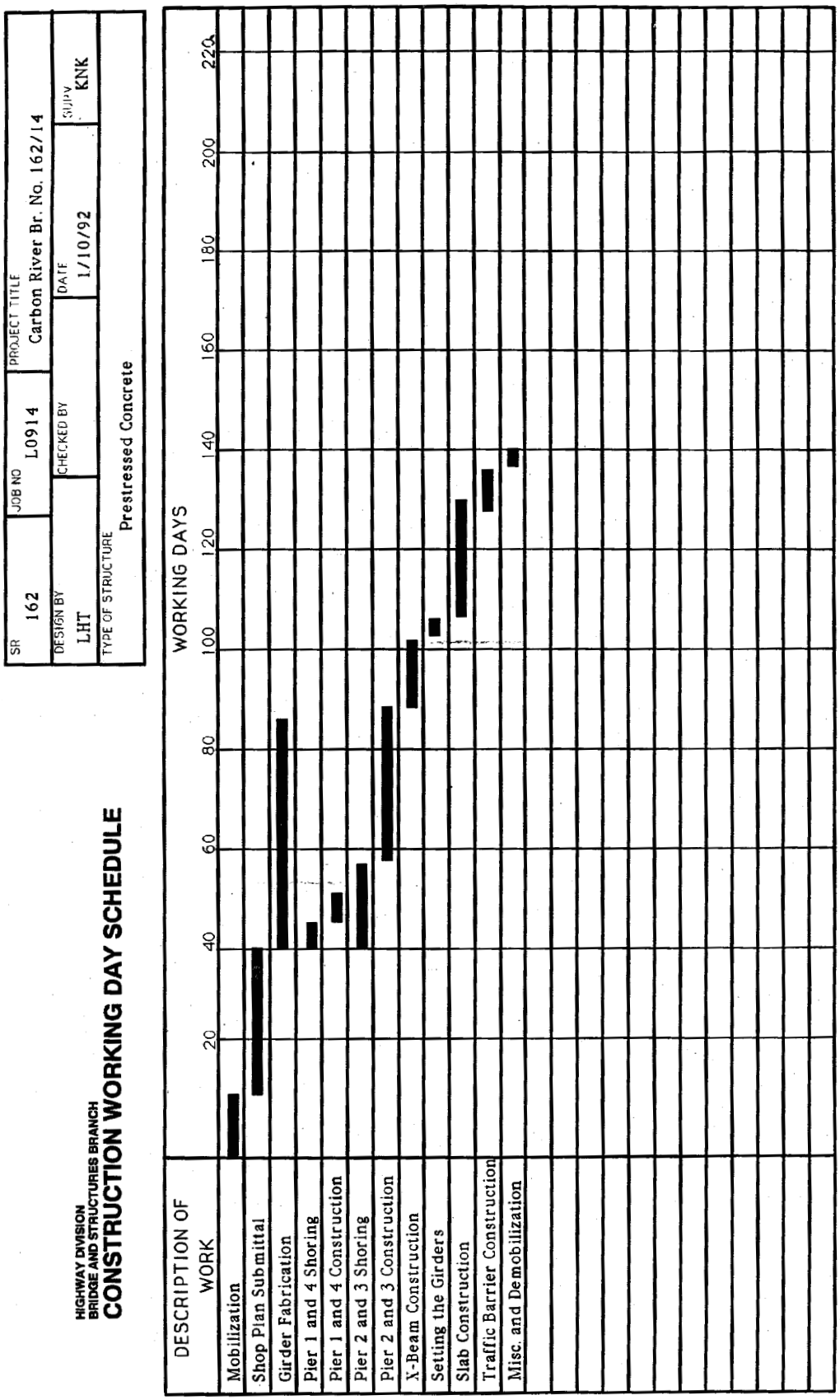

Chapter 13 Bridge Load Rating Contents

13.1 General 13-1
13.1.1 LRFR Method per the MBE 13-2
13.1.1.A Rating Equation 13-2
13.1.1.B Condition Factor (ϕ_C) 13-2
13.1.1.C System Factor (ϕ_S) 13-3
13.1.1.D Dead and Live Load Factors 13-3
13.1.1.E Live Load Factors for Legal and Permit Loads 13-3
13.1.2 Load Factor Method (LFR) 13-5
13.1.2.A Ultimate Method (LFR) 13-5
13.1.2.A.1 Rating Equation 13-5
13.1.2.B Dead and Live Load Factors 13-5
13.1.2.C Impact (IM) 13-5
13.1.2.D Resistance Factors (LFR) Method 13-6
13.1.2.E Service Method (LFR) 13-7
13.1.2.F Inventory Rating 13-7
13.1.2.G Operating Rating 13-7
13.1.3 Allowable Stress Method (ASD) 13-7
13.1.4 Live Loads 13-8
13.1.5 Rating Trucks 13-8
13.1.5.A Design Trucks 13-8
13.1.5.B Legal Trucks 13-9
13.1.5.C Overload Trucks 13-10
13.1.5.D Emergency Vehicles 13-10
13.2 Special Rating Criteria 13-11
13.2.1 Dead Loads 13-11
13.2.2 Live Load Distribution Factors 13-11
13.2.3 Reinforced Concrete Structures 13-12
13.2.4 Prestressed Concrete Structures 13-12
13.2.5 Concrete Decks 13-12
13.2.6 Concrete Crossbeams 13-12
13.2.7 In-Span Hinges 13-12
13.2.8 Girder Structures 13-13
13.2.9 Box Girder Structures 13-13
13.2.10 Segmental Concrete Bridges 13-13
13.2.11 Concrete Slab Structures 13-13
13.2.12 Steel Structures 13-13
13.2.13 Steel Floor Systems 13-13
13.2.14 Steel Truss Structures 13-13
13.2.15 Timber Structures 13-14

13.2.16 Widened or Rehabilitated Structures 13-14
13.2.17 Buried Structures 13-14
13.2.18 Overloads 13-15
13.2.19 Specialized Hauling Vehicles (SHVs) 13-15
13.3 Load Rating Software 13-17
13.4 Load Rating Reports 13-18
13.5 Structure Posting 13-19
13.6 Appendices 13-20
Appendix 13.6-A1 LFR Bridge Rating Summary 13-21
Appendix 13.6-A2 LRFR Bridge Rating Summary 13-22
13.99 References 13-23

Chapter 13 Bridge Load Rating

13.1 General

Bridge load rating is a procedure to evaluate the adequacy of various structural components to carry predetermined live loads. The Bridge Load Rating Engineer in the WSDOT Bridge Preservation Office is responsible for the bridge inventory and load rating of existing and new bridges in accordance with the National Bridge Inspection Standards (NBIS) and the AASHTO *Manual for Bridge Evaluation* (MBE), latest edition. Currently, only elements of the superstructure will be rated, however, if conditions warrant, substructure elements may need to be rated. The superstructure shall be defined as all structural elements above the column tops including drop crossbeams.

Load ratings are required for all new, widened, or rehabilitated bridges where the rehabilitation alters the load carrying capacity of the structure. Load ratings shall be done immediately after the design is completed and rating calculations shall be filed separately per Section 13.4 and files shall be forwarded to WSDOT's Load Rating Engineer.

The Bridge Preservation Office is responsible for maintaining an updated bridge load rating throughout the life of the bridge based on the current condition of the bridge. Conditions of existing bridges change over time, resulting in the need for reevaluation of the load rating. Such changes may be caused by damage to structural elements, extensive maintenance or rehabilitative work, or any other deterioration identified by the Bridge Preservation Office through their regular inspection program.

New bridges that have designs completed after October 1, 2010 shall be rated based on the Load and Resistance Factor Rating (LRFR) method per the MBE and this chapter. SNBI ratings shall be based on the HL-93 truck and shall be reported as a rating factor. For bridges designed prior to October 1, 2010, partially reconstructed or rehabilitated bridges where part of the existing structure is designed by the Allowable Stress Method (ASR) or by the Load Factor Method (LFR), SNBI ratings can be based on either the LFR or LRFR methods. The rating factors shall be based on HS loading and reported in tons when using the LFR method. For State owned structures, verify with WSDOT's Load Rating Engineer regarding which load rating method to use for bridges designed prior to October 1, 2010. By definition, the adequacy or inadequacy of a structural element to carry a specified truck load will be indicated by the value of its rating factor (RF); that is, whether it is greater than or less than 1.0.

13.1.1 LRFR Method per the MBE

13.1.1.A Rating Equation

$$RF = \frac{(C - \gamma_{DC}\,DC - \gamma_{DW}\,DW \pm \gamma_p\,P)}{\gamma_{LL}\,LL\,(1+IM)} \quad \text{(13.1.1A-1)}$$

Where:

RF	=	Rating factor
C	=	$\phi c\ \phi s\ \phi n\ R_n$, where $\phi c\ \phi s \geq 0.85$ for strength limit state
C	=	f_R for service limit state
R_n	=	Nominal Capacity of member
f_R	=	Allowable Stress per LRFD
DC	=	Dead load due to structural components and attachments
DW	=	Dead load due to wearing surface and utilities
P	=	Permanent loads other than dead loads
LL	=	Live load effect
IM	=	Dynamic load allowance (Impact)
$^*\gamma_{DC}$	=	Dead load factor for structural components and attachments
γ_{DW}	=	Dead load factor for wearing surface (ACP/HMA) and utilities
γ_P	=	Load factor for permanent load
γ_{LL}	=	Live load factor
ϕ_c	=	Condition factor
ϕ_s	=	System factor
ϕ_n	=	Resistance factor based on construction material

** for concrete overlays use γ_{DC}*

When rating the full section of a bridge, like a box girder or 3D truss, or crossbeams, with two or more lanes, the following formula applies when rating emergency vehicles and overload trucks.

$$RF = \frac{C - \gamma_{DC}DC - \gamma_{DW}DW \pm \gamma_P P}{\gamma_{LL}(LL + LL_{lgl})\,(1 + IM)} \quad \text{(13.1.1A-2)}$$

The formula above assumes that there is one overload truck occupying one lane, and one legal trucks occupying each of the remaining lanes. Trucks shall be placed in the lanes in a manner that produces the maximum forces. The live load factor for both of the legal truck and permit truck shall be equal and are dependent on the permit truck. The LL_{lgl} shown in the equation above corresponds to the maximum effect of the legal truck(s).

13.1.1.B Condition Factor (ϕc_c)

Condition factor is based on the Bridge Management System (BMS) condition state of the element per the most recent inspection report. The engineer should consider the quantity of each element in a fair or poor condition state and the notes describing the condition of an element when determining the appropriate condition factor.

Structural Condition of Member	ϕ_c
Good or Satisfactory, BMS Condition 1 or 2	1.00
Fair, BMS Condition 3	0.90
Poor, BMS Condition 4	0.85

13.1.1.C System Factor (ϕ_s)

The system factors shown in the table below apply to load ratings for flexural and axial forces; use a system factor of 1.00 when rating shear.

Super Structure Type	ϕ_s
Welded Members in Two Girder/Truss/Arch Bridges	0.85
Riveted Members in Two Girder/Truss/Arch Bridges	0.90
Multiple Eyebar Members in Truss Bridges	0.90
Three-Girder Bridges with Girder Spacing 6′	0.85
Four Girder Bridges with Girder Spacing ≤ 4′	0.95
All Other Girder and Slab Bridges	1.00
Floorbeams with Spacing >12′ and Noncontinuous Stringers	0.85
Redundant Stringer Subsystems Between Floorbeams	1.00

13.1.1.D Dead and Live Load Factors

					Inventory HL-93	Operating HL-93	Legal & NRL Loads	Permit & EV*
Bridge Type	**Limit State**	γ_{DC}	γ_{DW}	γ_p				
Reinforced Concrete	Strength I	1.25	1.50	--	1.75	1.35	Table 13.1-1	--
	Strength II	1.25	1.50	1.0	--	--	--	Table 13.1-1
Prestressed Concrete	Strength I	1.25	1.50	1.0	1.75	1.35	Table 13.1-1	--
	Strength II	1.25	1.50	1.0	--	--	--	Table 13.1-1
	Service III	1.00	1.00	1.0	1.00	--	1.0	1.0
	Service I	1.00	1.00	1.0	--	--	--	1.0
Steel	Strength I	1.25	1.50	1.0	1.75	1.35	Table 13.1-1	--
	Strength II	1.25	1.50	1.0	--	--	--	Table 13.1-1
	Service II	1.00	1.00	1.0	1.3	1.0	1.30	1.0

For prestressed concrete elements, the Service III rating for Legal Loads, and Service I rating for permit loads are optional per the MBE. Service ratings can be ignored at the discretion of the Load Rating Engineer if the structural elements being rated show no evidence of distress/cracking. Girders that have high load hits shall be rated for Service.

13.1.1.E Live Load Factors for Legal and Permit Loads

Table 13.1-1

Truck	Live Load Factor	ADTT ≤ 1000	ADTT > 1000	ADTT Unknown
Legal & NRL	γ_{LL}	1.30	1.45	1.45
Permit	γ_{LL}	1.20	1.20	1.20
EV*	γ_{LL}	1.30	1.30	1.30

*Emergency Vehicle

In cases where RF for legal loads is less than 1, which would require the bridge to be posted, live load factors may be reduced (interpolated based on ADTT), per Section 6A.4.4.2.3 of the MBE.

Number of Lanes	Multiple Presence Factor
1 Lane	= 1.2
2 Lanes	= 1.0
3 Lanes	= 0.85
> 3 Lanes	= 0.65

The table above shows the Multiple Presence Factors based on the number of loaded lanes. For cases where a permit truck or an emergency vehicle is combined with legal trucks, the multiple presence factor for the total number of loaded lanes in each case shall be applied to all loads. For cases where a permit truck is loaded in a single lane with no other trucks present, the multiple presence factor for 1 lane does not apply. For all trucks, if the Live Load Distribution Factor for single lane based on the Lever Rule controls, the multiple presence factor for 1 lane isn't applicable.

Dynamic Load Allowance (Impact)

Dynamic load allowance is dependent on the approach onto the bridge and condition of the deck and joints based on the latest inspection report.

Truck	IM	Element 7681	BMS Flag 322
HL 93 (All Span Lengths):			
Inventory	33%	N/A	N/A
Operating	33%	N/A	N/A
Legal, Permit Trucks & Emergency Vehicles:			
Spans 40′ or less	33%	N/A	N/A
Legal, Permit Trucks & Emergency Vehicles Spans greater than 40′:			
Smooth Riding Surface Along Approach onto the Bridge, Bridge Deck and Expansion Joints	10%	8	1, 2 or none
Minor Surface Deviations and Depressions	20%	6	3
Severe Impact to the Bridge	30%	3	4

Verify the conditions of the deck and joints to identify any deficiencies in the deck that would cause impact to the structure. For potholes less than 1″ deep use 20 percent impact, and use 30 percent impact for depths greater than 1″. For multi span bridges, take into consideration the type and location of the deficiency and whether Impact would be applicable to the entire structure or not. If the Inspection report has no Code 7681 or BMS Flag 322, then assume Smooth approaches.

Live Loads

The moving loads shall be the HL-93 loading, the AASHTO legal loads (including three AASHTO trucks and lanes where applicable and Notional Rating Load), the two WSDOT Overload vehicles (See Figures 13.1-1 and 13.1-3 thru 13.1-9) and the two Emergency Vehicles (See Figures 13.1-10 & 13.1-11). Inventory and operating ratings shall be calculated for the HL-93 truck. In cases where the rating factor for the Notational Rating Load (NRL) is below 1.00, then the single unit vehicles (SUV) shall be evaluated for posting, see MBE for SUV configurations.

13.1.2 Load Factor Method (LFR)

The load factor method can be applied to structures designed prior to October 2010. Ratings shall be performed per the MBE. Capacities, resistance factors, and distribution factors shall be based on the AASHTO *Standard Specifications* 17th edition.

13.1.2.A Ultimate Method (LFR)

13.1.2.A.1 *Rating Equation*

$$RF = \frac{\Phi C - \gamma_{DL} D \pm S}{\gamma_{LL} LL\,(1+IM)} \qquad (13.1.2\text{-}1)$$

Where:

RF	=	Rating factor
C	=	Nominal member resistance
Φ	=	Resistance factor based on construction material
D	=	Unfactored dead loads
LL	=	Unfactored live loads
S	=	Unfactored prestress secondary moment or shear
IM	=	Impact
γ_{DL}	=	Dead load factor for structural components and attachments
γ_{LL}	=	Live load factor

13.1.2.B Dead and Live Load Factors

Dead load factor = 1.30
Live load factor = 2.17 (Inventory)
= 1.30 (Operating)

13.1.2.C Impact (IM)

Truck	IM	Element 7681	BMS Flag 322
Design and Legal loads (Inventory & Operating)	Span dependent	N/A	N/A
Permit Loads:			
Smooth Riding Surface Along Approach onto the Bridge, Bridge Deck and Expansion Joints	10%	8	1, 2, or none
Minor Surface Deviations and Depressions	20%	6	3
Severe Impact to the Bridge	30%	3	4

If the inspection report has no Code 7681 or BMS Flag 322, then assume smooth approaches.

Impact (*IM*) for design and legal loads is span dependent:

$$IM = \frac{50}{(125+L)} \quad (13.1.2\text{-}2)$$

Where:

L is equal to span length

When rating the full section of a bridge, like a box girder or 3D truss, or crossbeams, which have two or more lanes, the following formula applies when rating emergency vehicles or overload trucks.

$$RF = \frac{C - \gamma_{DL} D \pm S}{\gamma_{LL}(LL + LL_{lgl})(1+IM)} \quad (13.1.2\text{-}3)$$

The formula above assumes that there is one overload truck occupying one lane, and one of the legal trucks occupying each of the remaining lanes. Trucks shall be placed in the lanes in a manner that produces the maximum forces. The LL_{lgl} shown in the equation above corresponds to the maximum effect of the legal trucks(s). The γ_{LL} corresponds to the live load factor for the overload truck and is the same for both legal and overload trucks. The same multiple presence factor for the total number of lanes loaded should be applied to all loads.

13.1.2.D Resistance Factors (LFR) Method

The resistance factors for SNBI ratings shall be per the latest AASHTO *Standard Specifications*. Following are the SNBI resistance factors assuming the member is in good condition:

Steel members:	1.00 (Flexure) 1.00 (Shear)
Prestressed concrete	1.00 (Flexure, positive moment) 0.90 (Shear)
Post-tensioned, cast-in-place:	0.95 (Flexure, positive moment) 0.90 (Shear)
Reinforced concrete:	0.90 (Flexure) 0.85 (Shear)

For prestressed and post-tensioned members, where mild reinforcing steel is used to resist negative moment, the resistance factors for reinforced concrete section shall be used in the ratings.

In cases where there is deterioration in a member, the cross section shall be reduced based on the inspection report. For cases where deterioration in members is described in general terms, reduce resistance factors of member by 0.10 for BMS Condition State of 3, and reduce resistance factors by 0.20 for BMS Condition State of 4. The engineer should consider the quantity of each element in a fair or poor condition state and the notes describing the condition of an element when determining the appropriate resistance factor.

13.1.2.E Service Method (LFR)

Prestressed and post-tensioned members in positive moment regions, and where post-tensioning is continuous over the supports, shall also be rated based on allowable stresses at service loads. The lowest rating factor between service and ultimate methods shall be the governing inventory rating.

13.1.2.F Inventory Rating

Concrete Tension:

$$RF = \frac{6\sqrt{f'_c} - (F_d + F_p + F_s)}{F_l\,(1+IM)} \qquad (13.1.2\text{-}4)$$

Concrete Compression:

$$RF = \frac{0.60f'_c - (F_d + F_p + F_s)}{F_l\,(1+IM)} \qquad (13.1.2\text{-}5)$$

$$RF = \frac{0.40f'_c - {}^{1}/_{2}\,(F_d + F_p + F_s)}{F_l\,(1+IM)} \qquad (13.1.2\text{-}6)$$

Prestressing Steel Tension:

$$RF = \frac{0.80f_y^* - (F_d + F_p + F_s)}{F_l\,(1+IM)} \qquad (13.1.2\text{-}7)$$

13.1.2.G Operating Rating

Prestressing Steel Tension:

$$RF = \frac{0.90f_y^* - (F_d + F_p + F_s)}{F_l\,(1+IM)} \qquad (13.1.2\text{-}8)$$

Where:

- RF = Rating factor
- f'_c = Compressive strength of concrete
- F_d = Dead load stress
- F_p = Prestressing stress
- F_s = Stress due to secondary prestress forces
- F_l = Live load stress
- IM = Dynamic load allowance (Impact)
- f_y^* = Prestressing steel yield stress

Allowable concrete stress shall be increased by 15 percent for overload vehicles. Impact is calculated same as ultimate method.

13.1.3 Allowable Stress Method (ASD)

The allowable stress method is applicable to only timber structures. Impact is not applied to timber structures.

Rating Equation:

$$RF = \frac{F_a - F_d}{F_l} \qquad (13.1.3\text{-}1)$$

Where:

- *RF* = Rating factor
- $^*F_a$ = Allowable stress
- F_d = Dead load stress
- F_l = Live load stress

$^*F_a$, for inventory rating, shall be per AASHTO *Standard Specifications*. For operating rating, F_A shall be increased by 33%

13.1.4 Live Loads

Live loads shall consist of:

HS20, Type 3, Type 3S2, Type 3-3, NRL, Legal Lane, OL1 and OL2 and EV2 and EV3 (See Figures 13.1-2 thru 13.1-11). The inventory and operating rating factors shall be calculated for all of the rated trucks except EV2 and EV3 where only the operating rating is required. In cases where the operating rating factor for the NRL load is below 1, then the single unit vehicles (SUV) shall be evaluated for posting, see MBE for SUV configurations.

Live load reduction factors (LFR Method).

Number of Lanes	Reduction Factor
1 Lane	= 1.0
2 Lanes	= 1.0
3 Lanes	= 0.90
>3 Lanes	= 0.75

13.1.5 Rating Trucks

13.1.5.A Design Trucks

Figure 13.1-1 HL-93 Load (LRFR Method)

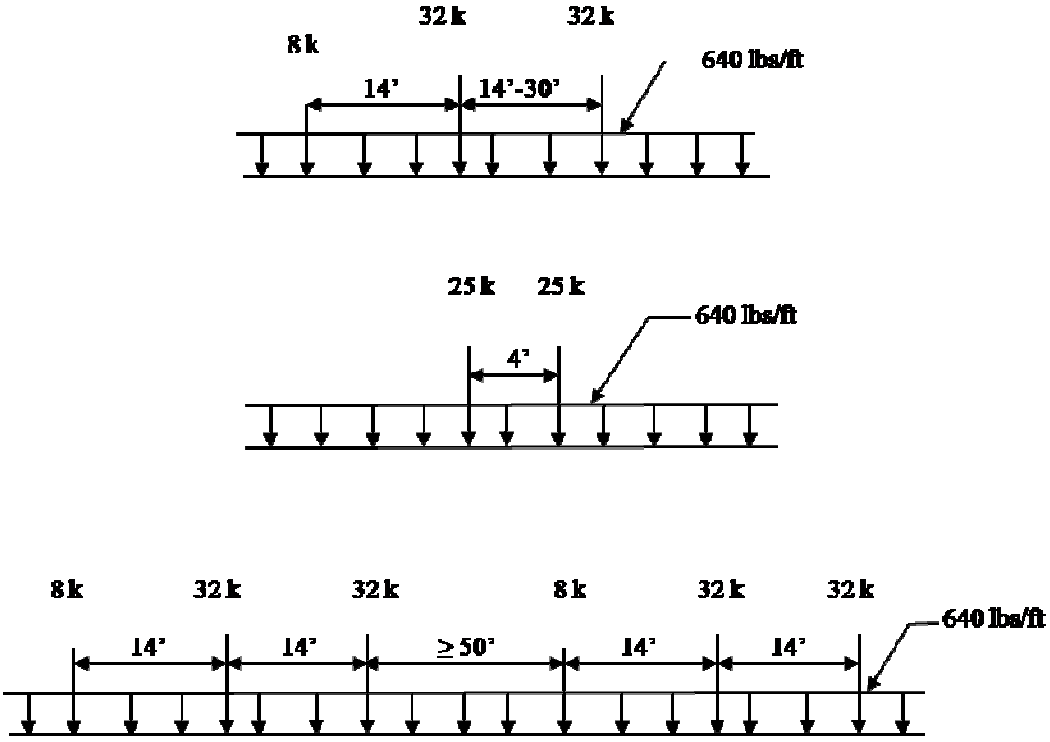

For negative moment and interior reaction (Reduce all loads to 90%).

Figure 13.1-2 HS-20 Load (LFR Method)

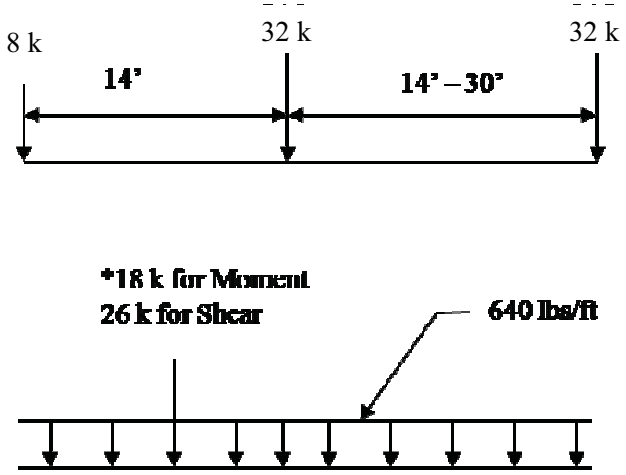

*In negative moment regions of continuous spans, place an equivalent load in the other spans to produce maximum effect.

13.1.5.B Legal Trucks

Figure 13.1-3 Type 3 (LRFR & LFR Methods)

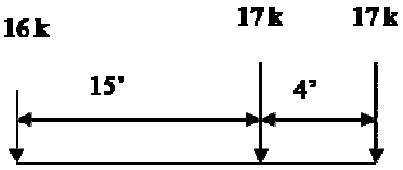

Figure 13.1-4 Type 3S2 (LRFR & LFR Methods)

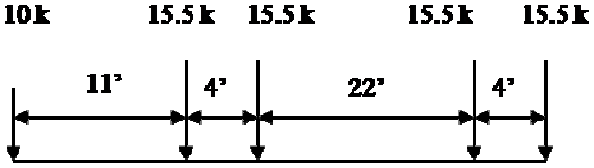

Figure 13.1-5 Type 3-3 (LRFR & LFR Methods)

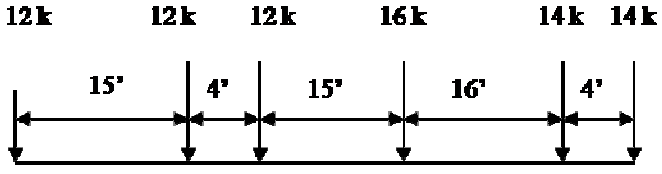

Figure 13.1-6 Notional Rating Load (NRL) (LRFR & LFR Methods)

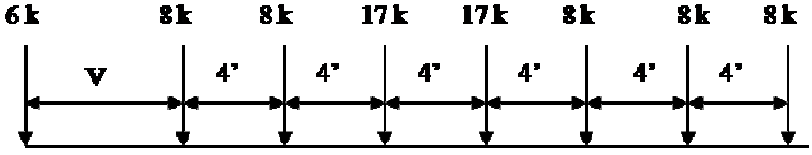

V varies from 6′-0″ to 14′-0″

Figure 13.1-7

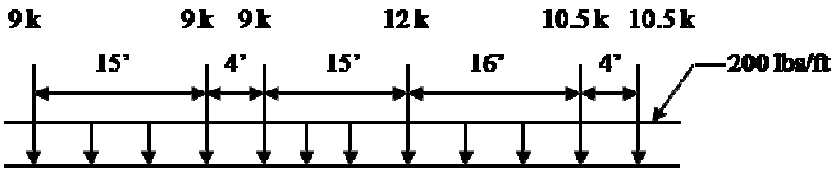

Legal lane is applicable to spans over 200' (LRFR & LFR Methods)

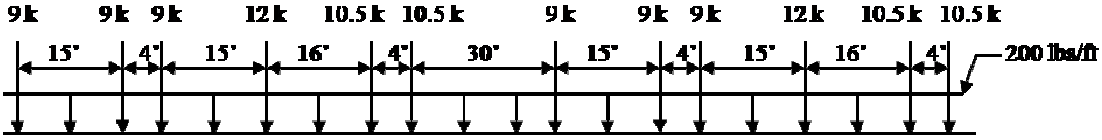

Legal Lane for continuous spans and reactions at interior pier (LRFR Method)

13.1.5.C Overload Trucks

Figure 13.1-8 Overload 1* (LRFR & LFR Methods)

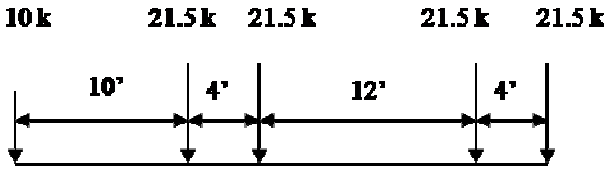

Figure 13.1-9 Overload 2* (LRFR & LFR Methods)

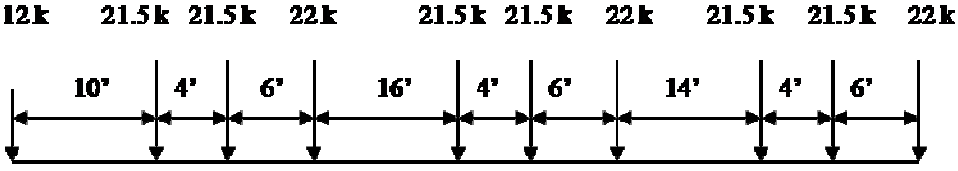

**When using the LRFR method for the overload trucks, for spans greater than 200' and when checking negative moment in continuous spans, apply 0.20 k/ft additional lane load to simulate closely following vehicles. The lane load can be superimposed on top of the permit load.*

13.1.5.D Emergency Vehicles

Figure 13.1-10 Type EV2 (LRFR & LFR Methods)

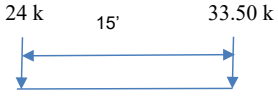

Figure 13.1-11 Type EV3 (LRFR & LFR Methods)

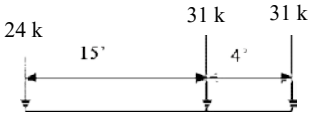

13.2 Special Rating Criteria

13.2.1 Dead Loads

Use 155 pcf for weight of the concrete; 140 pcf for weight of ACP/HMA and 150 pcf for concrete overlay. Use 50 pcf for weight of timber.

If concrete overlay (LMC) isn't called out on the plans or not provided, assume 1.50 inch thick.

Use the dead loads shown in the table below for miscellaneous bridge rails.

Bridge Rails and Traffic Barrier Dead Loads	
Type of Rail	**Weight in lbs/ft**
Thriebeam attached to existing rail	**20**
Thriebeam attached to posts	**30**
Metal Rail on top of Bridge rail	**20**
Bridge rail w/openings (doesn't include curb) used	**150**
In 1920's thru 1950's	
Std. Plan E29, 9.50" high curb includes bridge rail	
9" wide curb	**370**
18" wide curb	**465**
3' wide sidewalk	**665**
4' sidewalk	**800**
5' sidewalk	**935**
6' sidewalk	**1100**
Std. Plan E29, 11" high curb includes bridge rail	
9" wide curb	**395**
18" wide curb	**510**
3' wide sidewalk	**735**
4' sidewalk	**890**
5' sidewalk	**1100**
6' sidewalk	**1200**
Traffic Barriers:	
32" F-Shape	**460**
42" F-Shape	**710**
34" Single Slope	**490**
42" Single Slope	**670**

13.2.2 Live Load Distribution Factors

Live Load Distribution Factors (LLDF) shall be per the corresponding AASHTO Specification based on the method used to perform the load rating.

For exterior line member analysis, when using simplified equations per AASHTO Specifications, the LLDF shall not be taken greater than the result of the Lever Rule.

For emergency vehicles, when using simplified equations per AASHTO Specifications, use the appropriate equation based on the number of design lanes. In cases where a 3D analysis is performed, or when rating a X-beam, place an EV in one lane and a legal truck in remaining lanes (NRL truck typically controls).

For overload trucks, a single lane distribution factor shall be used when rating longitudinal members on per member basis and the multiple presence factor shall be divided out

when using the LRFR method. In cases where a 3D analysis is performed, or when rating a X-beam, place an overload in one lane and a legal truck in remaining lanes (NRL truck typically controls).

The number of lanes is dependent on the roadway width. For roadway width less than 18′, assume one lane for all trucks/loads. For roadway width between 18′ and 20′, the number of lanes for legal and permit loads shall correspond to the number of striped lanes on the bridge, and for the design trucks/loads use one lane. For roadway width between 20′ and 24′ use two lanes, each is equal to half the roadway width for all trucks/loads. For roadway width greater than 24′, the number of lanes shall be equal to the integer of the roadway width divided by 12 for all trucks/loads.

13.2.3 Reinforced Concrete Structures

For conventional reinforced concrete members of existing bridges, the service check shall not be part of the rating evaluation.

Rating for shear shall be performed for all rating trucks.

Shear capacity shall be based on the Modified Compression Field Theory (MCFT) when using the LRFR method, longitudinal reinforcement should be checked for increased tension caused by shear.

13.2.4 Prestressed Concrete Structures

Allowable stresses for concrete shall be per the design specification corresponding to the method used in the rating. Note that for the LRFD method in this manual (Chapter 5) uses “0 ksi” tension stress limit, however for rating purposes follow the design specifications.

Rating for shear shall be performed for all rating trucks.

Shear capacity shall be based on the MCFT when using the LRFR method, longitudinal reinforcement should be checked for increased tension caused by shear.

13.2.5 Concrete Decks

Typically bridge decks will not require rating unless the deck is post-tensioned. Bridge decks with SNBI condition of 4 or less may be load rated at the discretion of WSDOT’s Load Rating Engineer.

When rating of the deck is required, live load shall include all vehicular loads as specified in Section 13.1.5.

13.2.6 Concrete Crossbeams

Live loads can be applied to the crossbeam as moving point loads at any location between the curbs for integral crossbeams, or when it is conservative to do so. Otherwise, live loads shall be applied through the girder.

For integral crossbeams on prestressed girder bridges, the composite section shall be considered for all loads for the rating. The rating equation does not provide a method for considering staged load conditions.

13.2.7 In-Span Hinges

For in-span hinges, rating for shear and bending moment should be performed based on the reduced cross-sections at the hinge seat. Diagonal hairpin bars are part of this rating as they provide primary reinforcement through the shear plane.

13.2.8 Girder Structures

Girders shall be rated on a per member basis.

13.2.9 Box Girder Structures

Bridges with spread box girders shall be rated on a per box basis. Otherwise, the rating shall be for the full bridge cross-section for all applied loads. The number of lanes applied to a full section box girder shall be the roadway width divided by the design lane width rounded down to the nearest integer. In cases where sections of the deck are covered with landscaping (lid structures) or the skew between the piers varies by more than 10 degrees along the structure, or the bottom slab width of the box is greater than 60 ft, then the box shall be rated on a per web basis.

13.2.10 Segmental Concrete Bridges

Segmental Concrete Bridges shall be rated per the latest edition of the MBE.

13.2.11 Concrete Slab Structures

Cast-in-place (CIP) solid slabs shall be rated on a per foot of width basis. Precast panels shall be rated on a per panel basis. CIP voided slabs shall be rated based on a width of slab equal to the predominant center-to-center spacing of voids.

When rating flat slabs on concrete piling, assume pin-supports at the slab/pile interface.

13.2.12 Steel Structures

Checking of fatigue shall not be part of the rating evaluation.

For horizontally curved bridges, flange lateral bending, diaphragms and cross frames shall also be rated.

Pin and hanger assemblies shall be rated. Analyze pins for bearing and combined shear and flexure. Analyze hanger plates for bearing, shear, block shear, tension yielding on the gross section and fracture on the net section.

Splices of fracture critical members shall be rated.

13.2.13 Steel Floor Systems

When rating floorbeams and stringers assume they are pinned at the supports. Assume lengths for analysis as the distance from outside face to outside face of end connections. Live loads shall be applied to the floorbeam as moving point loads at any location between curbs, which produce the maximum effect.

Rating of connections is not required unless there is evidence of deterioration.

13.2.14 Steel Truss Structures

Typical steel trusses are rated on a per truss basis assuming all truss members have pinned connections. In some special cases, a 3D analysis may be required or fixed connections may be assumed.

In general, rate chords, diagonals, verticals, end posts, gusset plates, stringers and floorbeams. For state bridges, gusset plates shall be rated based on WSDOT's criteria (contact Load Rating Engineer for criteria) otherwise, follow the latest version of the Manual for Bridge Evaluation. Structural pins shall be rated; analyze pins for combined shear and flexure, and the side plates for bearing capacity.

Tension members and splices subjected to axial tension shall be investigated for yielding on the gross section and fracture on the net section.

For truss members that have been heat-straightened three or more times, deduct 0.1 from the resistance factor.

13.2.15 Timber Structures

Unless the species and grade is known, assume Douglas fir. Use select structural for members installed prior to 1955 and No. 1 after 1955. The allowable stresses for beams and stringers shall be as listed in the AASHTO Specifications.

The nominal dimensions should be used to calculate dead load, and the net dimensions to calculate section modulus. Unless the member is notched or otherwise suspect, shear need not be calculated.

13.2.16 Widened or Rehabilitated Structures

For widened bridges, rate crossbeams; assume hinge at the interface between new and existing portions of the X-beam.

For existing portion of the widened bridge, a load rating shall be performed if the load carrying capacity of the longitudinal members is altered, or the dead and live loads have increased due to the widening.

Longitudinal rating for the widened portion will be required, except in cases where the widened portion has the same capacity of the existing structure or exceeds it. For example, if a slab bridge is widened and the reinforcing in the widened portion matches the existing structure, then no rating will be required. Another example, if a girder bridge is widened using same section as the existing bridge with the same or more reinforcing, and the same or less live and dead loads, then it will not require rating.

For rehabilitated bridges, a load rating shall be required if the load carrying capacity of the structure is altered by the rehabilitation.

13.2.17 Buried Structures

The distribution of live load thru fill shall be per the corresponding AASHTO Design Specification used for the rating. Use the load rating equation for box culverts and corresponding factors per the latest MBE and interims.

For the LRFR Method, HL-93 load rating, a single lane distribution factor with multiple presence factor shall be used. For Legal, EV and overload trucks a single lane distribution factor shall be used; the multiple presence factor shall be divided out. The live load factor for Legal loads shall be 2.0; for EV and overloads, the live load factors shall be per Table 13.1-1.

Buried structures will not require load rating if they meet the following criteria:

- Single span structures where fill depth exceeds clear span.
- Single span structures up to 24 ft. clear span and depth of fill is greater than 13 ft.
- Multiple span structures where depth of fill exceeds the distance between inside faces of end walls.

A note shall be included in the letter file for structures that meet the criteria stated above.

13.2.18 Overloads

If the rating factor for either of the permit vehicles is less than 1.0 when rating full longitudinal cross-sections where distribution factors are not used (3D Model), or crossbeams, analyze them with a single overload truck and report the rating factors for both single and multiple lanes on the Load Rating Summary Sheet.

13.2.19 Specialized Hauling Vehicles (SHVs)

For State owned structures, WSDOT will make use of the commentary under Section C6A.4.4.2.1b of the ERRATA for Manual Bridge Evaluation, 3rd Edition (MBE-3) in evaluating whether to update load ratings of existing structures to comply with FHWA's November 2013 memo. In addition, WSDOT performed a parametric study to compare the forces on structures exerted by AASHTO Special Hauling Vehicles (SHVs) SU4, SU5, SU6 and SU7 to the three AASHTO legal trucks, Type 3, Type 3S2 and Type 3-3. The study consisted of modeling the SHVs and AASHTO legal trucks running on simple span structures that ranged in length from 10 to 150 feet as well as on two continuous equal spans that ranged in length from 10 to 150 feet each as well. Maximum moments and shears generated by the Legal trucks and SHVs were compared for both models. Results showed that structures with rating factors for the three AASHTO legal trucks greater than 1.50 can safely carry the SHVs. Accordingly, the following criteria will be used to evaluate the need to rate existing structures for SHVs (see also SHVs Load Rating Process Flowchart):

- Bridges with rating factors for the Type 3, Type 3S2 and Type 3-3 less than or equal to 1.35 will be rated for the AASHTO SHVs.
- Bridges with SNBI condition rating for Super or Substructure less than 5 will be rated for AASHTO SHVs.
- Bridges designed for a load lighter than an HS20 will be rated for AASHTO SHVs.
- Bridges that require updating to the load rating due to change in condition, additional dead load or structural modification that will affect capacity of the structure will be rated for AASHTO SHVs.
- Bridges with Operating rating factor for the HS20 > 1.25 are determined to be adequate to carry AASHTO SHV loads.
- Bridges with rating factors for the Type 3, Type 3S2 and Type 3-3 greater than 1.35 for bridges with minimum span length of 80 feet are determined to be adequate to carry AASHTO SHV loads.
- Bridges with rating factors for the Type 3, Type 3S2 and Type 3-3 greater than 1.50 are determined to be adequate to carry AASHTO SHV loads.

For structures that meet the above guidelines, WSDOT will create a new stamped summary sheet/letter to be included in the bridge file stating that the ratings are adequate to carry AASHTO SHV loads based on the criteria in this manual.

Figure 13.2-1 SHV's Load Rating Process Flowchart

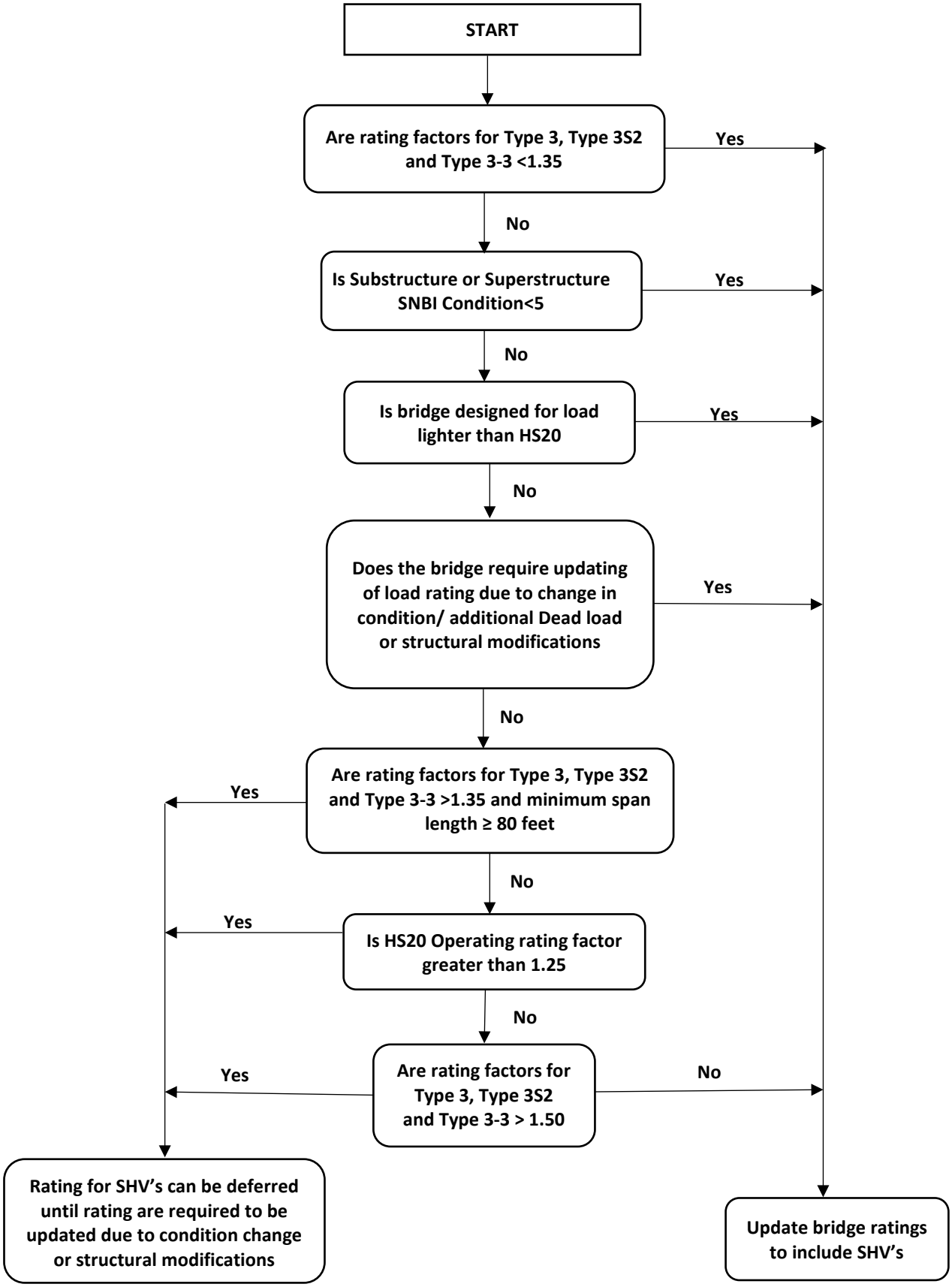

13.3 Load Rating Software

For the LRFR Method BridgeLink or Bridg shall be used when rating concrete members and CSIBridge shall be utilized for the analysis of structural steel members. Bridg shall be used for rating steel and concrete structures using the LFR method. Obtain WSDOT's Load Rating Engineer approval for the use of the proper software prior to commencing any work.

For more complex structures such as steel curved girders, segmental structures, and arches,CSiBridge shall be used. Loads and capacities shall be tabulated in a manner that will make it simple for WSDOT to work with the data in the future. Method of tabulation shall be approved by WSDOT's Load Rating Engineer prior to commencing any work. Microsoft Excel shall be used for tabulation, and all cells in the spreadsheets shall be unlocked, and any hidden code or functions shall be explained thoroughly in the report. Hand calculations shall be provided to verify all spreadsheets.

The above requirements apply to State owned structures.

13.4 Load Rating Reports

Rating reports shall be organized in such a manner that it is easy to follow, and all assumptions are clearly stated. For large complex structures, include a table of contents and number the pages in the report. For State owned structures, load rating reports shall be submitted in an electronic format (PDF).

The report shall consist of:

1. A Bridge Rating Summary sheet, as shown on Appendix 13.6-A1 (LFR) and 13.6-A2 (LRFR) reflecting the lowest rating factor. The summary sheet shall be stamped, signed, and dated by a professional engineer licensed in the State of Washington. The electronic stamp and signature shall follow the State of Washington Board of Registration for Professional Engineers and Land Surveyors guidelines. A single load rating summary sheet, stamped signed and dated, shall be provided in cases where different sections of a structure were designed and rated by different consultants. The summary sheet shall reflect the lowest rating factors for the different trucks for all sections of the structure.
2. A brief report of any anomalies in the ratings and an explanation of the cause of any rating factor below 1.00.
3. Computer output files and any other calculations such as, but not limited to dead loads, distribution factors or any required special analysis.

The electronic submittal shall consist of:

1. A single pdf file containing the stamped signed and dated summary sheet, table of content as needed, description of any anomalies and all output files and calculations supporting the load rating results.
2. A complete electronic set of plans for the bridge (applies to new designed bridges), shall be provided as a separate file, PDF format.
3. One set of electronic files containing the final versions of all input and output files, and other calculations created in performing the load rating that can be opened and utilized in the appropriate program.

Electronic submittals shall be delivered to WSDOT via email, ftp site or USB drive.

A minimum of 30 days is required for the Bridge Preservation Office review of any load rating submitted as part of a Design Build Contract.

When the load rating calculations are produced as part of a design project (new, widening, or rehabilitation), the load rating report and design calculations shall be bound separately. All calculations required to complete the load rating shall be included in the report; in other words, reference to design calculations isn't acceptable.

13.5 Structure Posting

Structures with a Load Rating Factor less than 1 for any of the Legal Trucks shall be posted. See Chapter 5 of the *Bridge Inspection Manual* for posting process\requirements.

13.6 Appendices

Appendix 13.6-A1 LFR Bridge Rating Summary

Appendix 13.6-A2 LRFR Bridge Rating Summary

Appendix 13.6-A1 LFR Bridge Rating Summary

BRIDGE RATING SUMMARY

PE Stamp

Bridge Name: _____
Bridge Number: _____
SID Number: _____
Span Types: _____
Bridge Length: _____
Design Load: _____
Engineering Firm/Agency: _____
Rated By: _____
Checked By: _____
Date: _____

Inspection Report Date: _____ Deck Condition ____
Overlay Thickness: _____ Superstructure Condition ____
Rating Method: _____ Substructure Condition ____

Truck	RF (INV)	RF (OP)	Controlling Point
AASHTO 1			
AASHTO 2			
AASHTO 3			
Legal Lane			
NRL			
OL-1			
OL-2			
EV2			
EV3			

SNBI Rating	RF	Tons (US)	Controlling Point
Inventory (HS-20)			
Operating (HS-20)			

Remarks:

13.6-A1

Appendix 13.6-A2 LRFR Bridge Rating Summary

BRIDGE RATING SUMMARY

PE Stamp

Bridge Name: _____
Bridge Number: _____
SID Number: _____
Span Types: _____
Bridge Length: _____
Design Load: _____
Engineering Firm/Agency: _____
Rated By: _____
Checked By: _____
Date: _____

Inspection Report Date: _____ Deck Condition
Rating Method: _____ Superstructure Condition
Overlay Thickness: _____ Substructure Condition

Truck	RF	γ	Controlling Point
AASHTO 1			
AASHTO 2			
AASHTO 3			
Legal Lane			
NRL			
OL-1			
OL-2			
EV2			
EV3			

SNBI Rating	RF	γ	Controlling Point
Inventory (HL-93)			
Operating (HL-93)			

Remarks:

13.6-A2

13.99 References

1. AASHTO LRFD *Bridge Design Specification*
2. AASHTO *Standard Specifications for Highway Bridges*, 17th edition
3. AASHTO *Manual For Bridge Evaluation*
4. WSDOT *Bridge Inspection Manual* M 36-64

Chapter 14 Accelerated and Innovative Bridge Construction

Contents

14.1 Introduction . . . 14-1
14.1.1 General . . . 14-1
14.1.2 ABC Methods . . . 14-2
14.2 Application of ABC . . . 14-3
14.2.1 Economics of ABC . . . 14-3
14.2.2 Practical Applications . . . 14-3
14.2.3 Prefabricated Bridge Elements and Systems . . . 14-4
14.2.3.A Prefabricated Bridge Elements . . . 14-4
14.2.3.B Prefabricated Systems . . . 14-5
14.2.4 Project Delivery Methods . . . 14-5
14.2.5 Decision Making Tools . . . 14-5
14.3 Structural Systems . . . 14-8
14.3.1 Precast Bent System Design for High Seismic Regions . . . 14-8
14.3.1.A Description of System . . . 14-9
14.3.1.B Design Philosophy . . . 14-10
14.3.1.C Design Provisions . . . 14-10
14.3.1.C.1 Socket-Type Footing Connections . . . 14-10
14.3.1.C.2 Drilled Shaft . . . 14-10
14.3.1.C.3 Precast Column . . . 14-10
14.3.1.D Geometry and General Requirements . . . 14-11
14.3.2 Geosynthetic Reinforced Soil Integrated Bridge System . . . 14-11
14.3.3 Precast Decks . . . 14-11
14.3.4 Link Slabs . . . 14-11
14.4 Innovative Bridge Construction . . . 14-12
14.4.1 Self-Centering Columns . . . 14-12
14.4.2 Shape Memory Alloy . . . 14-13
14.5 Shipping, Handling and Erection . . . 14-15
14.5.1 Lifting Devices . . . 14-15
14.5.2 Handling, Storage and Shipping . . . 14-15
14.5.3 Tolerances . . . 14-16
14.5.4 Assembly Plans . . . 14-16
14.5.5 Element Sizes . . . 14-17
14.6 Installation Method Options . . . 14-18
14.6.1 Lateral Slide Systems . . . 14-18
14.6.2 Self-Propelled Modular Transporter Systems . . . 14-18
14.7 Examples of Accelerated and Innovative Bridge Construction . . . 14-19

This page intentionally left blank.

Chapter 14 Accelerated and Innovative Bridge Construction

14.1 Introduction

14.1.1 General

The purpose of this chapter is to provide guidance for the planning and implementation of projects that may benefit from the application of rapid bridge construction technologies and methods. This chapter was prepared to provide bridge engineers with a basic understanding of different Accelerated Bridge Construction (ABC) methods available, help guide project specific selection of ABC methods, and to encourage the use of the ABC methods described in this chapter, or other innovative approaches to rapid bridge construction. It was also prepared to provide guidance with the design and detailing of precast concrete superstructure and substructure elements for accelerated bridge construction. For the sake of this chapter, ABC and Innovative Bridge Construction are encompassed in the term "ABC."

This chapter is written in accordance with the AASHTO *Guide Specifications for LRFD Bridge Seismic Design*, 2nd Edition (SEISMIC). It is WSDOT's application of the Federal Highway Administration's Every Day Counts. It is intended to compliment the AASHTO *LRFD Guide Specifications for Accelerated Bridge Construction*, 1st Edition (LRFD-ABCGS).

Modern implementations of ABC have been demanded by tight traffic control requirements in urban areas. Bridges used to be constructed on new alignments, connecting communities together in modern ways for the first time where there was no traffic and lower demand to travel from one community to another. Prior to modern times, the advancements made during the Industrial Revolution in new materials and construction techniques sped up construction. We saw bridge construction transform from stone construction used in ancient times, to include steel, concrete, and members subject to much larger forces than in the past. It's the expressed desire here to apply the benefits of new advancements in materials and construction techniques to a wider array of projects and take the position of minimal time on site as the expectation of every project.

The goal of ABC is to deliver projects earlier to the traveling public, reducing the impacts of on-site construction to motorists, promoting traveler and worker safety, and reducing environmental impacts. ABC uses different methods of project delivery and construction to reduce the project schedule, on-site construction time, and public impact. With the ever increasing demand on transportation infrastructure, and the number of bridges that are approaching the end of their service lives, the need for ABC becomes more apparent. ABC should be viewed as a subset of a larger accelerated project delivery effort encompassing all aspects of project development including contract administration through construction contract acceptance.

ABC methods are generally safer than conventional construction methods because much of the construction can be done offsite, away from traffic. Quality can also be improved because the construction is often completed in a more controlled environment compared to on-site conditions. Ease of construction and design can be improved as standardized bridge pieces are developed. The use of ABC comes with challenges that need to be overcome on a project-specific basis, often accelerating the schedule increases the cost of the project. This increased project delivery cost can be offset by reductions in road user costs and economic loss to the affected communities.

14.1.2 ABC Methods

Many different methods to facilitate ABC are available. Some of those methods are discussed in greater detail later in this chapter. They include the following:

- precast bridge piers
- geosynthetic reinforced abutments with precast slab or deck girder superstructures
- precast decks
- precast footings
- entire precast abutments

Installation of these bridge elements can be aided with use of lateral sliding of large bridge members or self-propelled modular transporters, or heavy cranes. Contractually, ABC can be aided with the use of alternate project delivery methods, such as Design-Bid-Build, Design-Build or General Contractor/Construction Manager.

14.2 Application of ABC

14.2.1 Economics of ABC

Long construction time allotments may provide for a cheaper bottom line on a project, but they introduce a number of unassigned risks that provide an intangible cost to the contractor, and ultimately to the public.

Construction times have significant economic cost to the public through traffic delays and interruption to commerce. It may come as longer traffic jams in already busy urban areas, or as crowded interstates between urban centers, especially on holiday weekends, and subsequent traffic jams on local roads adjacent to the highway.

Another cost to consider is that which results from unfamiliar technologies. Until ABC methods are more fully understood by contractors, the estimated costs of the intangible and unfamiliar things will likely be higher than methods common today. This is due to the added risk associated with those unfamiliar construction techniques. With more exposure and familiarity come lower costs as the contractors develop their means and methods.

14.2.2 Practical Applications

Locations where time is critical, or access is difficult are where ABC Construction methods would be most fully utilized. Building piers in busy highway medians, installing columns in waters with narrow fish window times, or building bridges on mountain roads far from concrete production facilities are excellent places to consider ABC. ABC Methods may also be fitting for construction over a large body of water, where access is difficult and heavy moving equipment, perhaps on a barge, is easy to bring to the site. Pouring concrete underwater can be difficult, and perhaps installing a precast element in the water may be easier than constructing a coffer dam.

Other locations to consider are where the overall footprint of a job site may be a concern. Realize that accessing the connections of precast members can take up a lot of space and may not be necessary. Rebar would come with the precast member instead of being placed before the concrete, eliminating the need for access for workers and equipment near to the ends of the precast member. By moving more duties off site, less space is needed on site, and the offsite location could be at a less sensitive location. If there were concerns with disturbing the adjacent ground, smaller construction sites near a bridge could be beneficial.

Bridge designs with many similar pieces, such as long retaining walls, bridge decks, or bridges with many piers are also good candidates for ABC. The smaller pieces can be shipped in on semi-trucks and placed immediately. The repetition would bring more economic value to the ABC component of the project and bring the cost of the precast piece down.

Often precast pieces can be used to provide a structural shell that will serve multiple purposes. Precast pieces can be used to form a caisson or a coffer dam that will define a dry work zone which would be filled in with concrete later. The shell could simply provide a void that makes shipping a piece easier, which will get filled with concrete when another bridge portion is poured.

Construction schedules can make ABC worth considering. Lateral sliding of bridge superstructures have been used such that an existing bridge can remain until the critical moment where one bridge is rolled out, and a new one rolled in. Months of construction can take place next to the location the bridge would be used, and in a matter of hours the new structure could be slid into place.

In general, where time on a job site ought to be minimized, ABC would make a good choice to consider.

14.2.3 Prefabricated Bridge Elements and Systems

For the sake of bridge design, use of Prefabricated Bridge Elements and Systems (PBES) is one strategy that can meet the objectives of accelerated bridge construction. PBES are structural components of a bridge that are built offsite, or near-site of a bridge, and include features that reduce the onsite construction time and mobility impact time that occur from conventional construction methods. PBES includes innovations in design and high-performance materials and can be combined with the use of project delivery and material procurement methods that invoke faster on-site construction. Because PBES are built off the critical path and under controlled environmental conditions, improvements in safety, quality, and long-term durability can be better achieved.

14.2.3.A Prefabricated Bridge Elements

Prefabricated bridge elements (PBE) are a single structural component of a bridge built using PBES methods. PBE can be used in combination with other accelerated bridge construction methods. Commonly used WSDOT prefabricated bridge elements are Wide Flange-girders, Deck girders, Tub girders, Slab girders, stay-in-place concrete deck panels, prefabricated pier crossbeams, pier columns, and footings, as well as precast three-sided and four-sided box culverts. For a list and definition of additional specific prefabricated elements refer to section 1.3.2 to 1.3.7 of LRFD-ABCGS.

Prefabricated bridge elements are used to reduce the on-site time required for concrete forming, rebar tying and concrete curing, saving weeks to months of construction time. Deck girder elements eliminate conventional onsite deck forming activities. To reduce onsite deck forming operations, deck girder elements are typically placed in an abutting manner.

Prefabricated elements are often of higher quality than conventional field-constructed elements, because the concrete is cast and cured in a controlled environment. The elements are often connected using high strength grout, and post-tensioning or pre-tensioning. Connection strength is an important consideration and close attention shall be given to their design. There are many tools available to provide durable, high strength connections. Their design and details shall follow the guidance given in LRFD-ABCGS section 3.6 Connection Design and Detailing.

14.2.3.B Prefabricated Systems

Prefabricated Systems are a category of PBES that consists of an entire superstructure, an entire substructure, or a total bridge that is procured in a modular manner such that traffic operations can be allowed to resume after placement. Prefabricated systems are rolled, launched, slid, lifted, or otherwise transported into place, having the deck and preferably the barriers in place such that no separate construction phase is required after placement. Due to the manner in which they are installed, prefabricated systems often require innovations in planning, engineering design, high-performance materials, and structural placement methods.

Benefits of using prefabricated systems include:

- Minimal utility relocation and right-of-way take, if any at all
- No-to-minimal traffic detouring over an extended period of time
- Preservation of existing roadway alignment
- No use of temporary alignments
- No temporary bridge structures
- No-to-minimal traffic phasing or staging

For a list and definition of prefabricated systems refer to Section 1.3.8 of LRFD-ABCGS.

14.2.4 Project Delivery Methods

At WSDOT, region engineers determine which project delivery method to be employed. *Design Manual* M 22-01 describes the policy and process for determination of the most appropriate project delivery method.

14.2.5 Decision Making Tools

Figures 14.2.6-1 and 14.2.6-2 are tools that may be used for each bridge project, and considered at the Preliminary Plans stage of each project, or sooner. These tools are intended to be used together. It is expected each project will consider ABC to some degree. The questionnaire and flowchart provide some rational measure for how well suited a project may be for ABC.

The questionnaire is intended to review the entire project, including items beyond the immediate interests of the bridge, and assign a measure of relevance and priority to each item of concern. This assures that not only is a specific item being considered, but so is its significance to the project. The relevance value should be multiplied by the priority value for each question. The product of each of those numbers shall be added up at the bottom of the questionnaire, and that number will be the ABC Rating.

The flow chart is intended to be a situational evaluation regardless of magnitude or relevance of other items. To use the flowchart, the ABC Rating needs to be determined from the questionnaire, and the path one takes through the flowchart is based upon that rating. The outcome of the flow chart will provide the designer with a recommendation to either pursue the ABC approach or to use conventional methods.

Figure 14.2.6-1 ABC Questionnaire

ABC DESIGN IMPACT QUESTIONNAIRE				
PROJECT: DATE: COMPLETED BY:		(R) RELEVANCE RANGE 0 = N.A. 1 = LOW TO 5 = HIGH	(P) PRIORITY RATING 1 = LOW 2 = MEDIUM 3 = HIGH	(R x P) SCORE
CATEGORY	DECISION MAKING QUESTION			
CONSTRUCTION TIME	ARE THERE WEATHER LIMITATIONS FOR CONVENTIONAL CONSTRUCTION?			
	IS THERE RESTRICTED CONSTRUCTION TIME DUE TO ENVIRONMENTAL SCHEDULES?			
	IS THERE RESTRICTED CONSTRUCTION TIME DUE TO ECONOMIC IMPACT?			
	HAS THE REGION EXPRESSED DESIRE TO COMPLETE THE BRIDGE CONSTRCUTION IN ONE SEASON?			
	IS THE BRIDGE CONSTRUCTION ON A CRITICAL PATH OF THE TOTAL PROJECT?			
ENVIRONMENTAL	DOES ABC MITIGATE A CRITICAL ENVIRONMENTAL IMPACT, ARCHAEOLOGICAL CONCERN, OR OTHER SENSITIVE ISSUE?			
USER COSTS AND DELAYS	DOES THE BRIDGE CARRY, OR IS IT OVER A ROUTE WITH A HIGH ADT AND/OR ADTT?			
	WOULD ABC SIGNIFICANTLY IMPROVE THE TRAFFIC CONTROL PLAN?			
	ARE ONLY SHORT TERM CLOSURES ALLOWED?			
	WILL CONVENTIONAL CONSTRUCTION CAUSE A SIGNIFICANT DELAY OR DETOUR TIME?			
	WILL BRIDGE CONSTRUCTION HAVE AN ADVERSE IMPACT ON THE LOCAL ECONOMY?			
SITE CONDITIONS	ARE THERE EXISTING RAILROADS THAT IMPACT THE CONSTRUCTION WINDOW OR ACTIVITIES?			
	ARE THERE EXISTING UTILITIES THAT IMPACT THE CONSTRUCTION WINDOW OR ACTIVITIES?			
	DOES THE SITE CAUSE PROBLEMS FOR CONVENTIONAL CONSTRUCTION METHODS?			
	IS THE BRIDGE OVER A WATERWAY?			
RISK MANAGEMENT	DOES ABC IMROVE WORKER SAFETY?			
	DOES ABC IMPROVE TRAVELER SAFETY?			
	DOES ABC ALLOW MANAGEMENT OF ANOTHER SPECIFIC RISK?			
OTHER	WILL REPETITION OF ELEMENTS ALLOW FOR ECONOMY OF SCALE?			
		TOTAL SCORE = ABC RATING =		

Figure 14.2.6-2 ABC Flow Chart

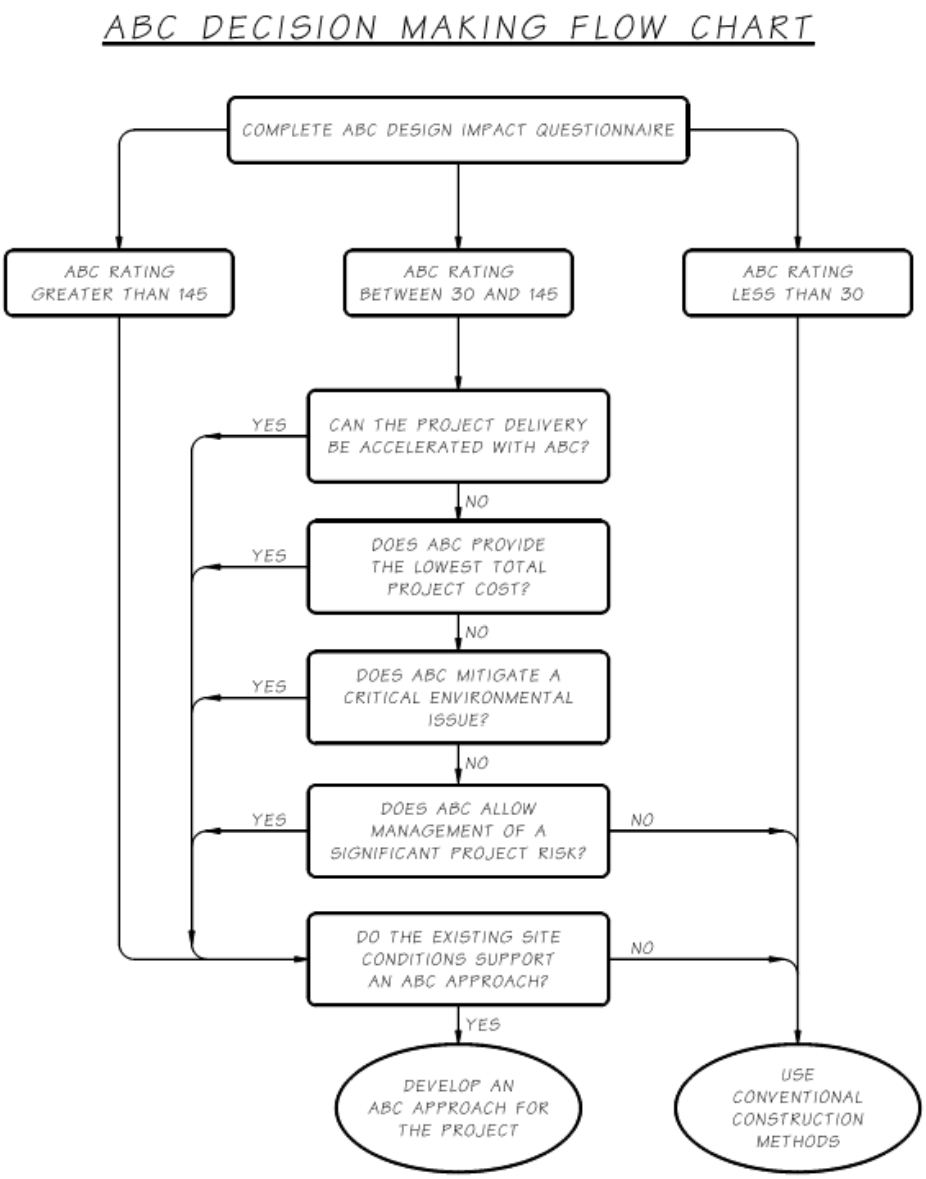

14.3 Structural Systems

This section describes a few structural systems that an engineer may wish to consider. These systems are ones WSDOT has reviewed and developed to a level that is ready for production work. This section discusses the precast bent system. WSDOT has worked closely with researchers and industry in the development of the precast bent system for high seismic regions and supports it use in appropriate applications.

14.3.1 Precast Bent System Design for High Seismic Regions

This system is often referred to as the Highways for Life (HfL) system, Precast Pier System, or Precast Bent System. It's configured to be used with precast girder superstructures that are supported on crossbeams that are constructed in two phases. The first or lower-stage crossbeam is constructed, the girders are then set on this beam, and finally the second or upper-stage crossbeam is constructed using cast-in-place concrete to integrate the superstructure and substructure. This precast bent system is an adaptation of a common type of reinforced concrete bent or pier construction used throughout the United States. It utilizes the grouted duct technology developed through university research.

Unique features of the precast bent system are a socket connection at the column-to-foundation connection and a grouted-duct arrangement at the column-to-crossbeam connection. This system utilizes precast columns and precast lower-stage crossbeams. The system also can include splices in the column to facilitate weight control for the columns, whereby splitting the column into multiple segments. This can control the weight of precast elements that must be transported. Similarly the precast crossbeam can be split into segments for the same reason. Both of these splice connections are configured to be capacity protected for seismic forces. The lower column socket connection has also been configured to be used with spread footings, pile caps and drilled shafts.

Design criteria for these connections shall follow the LRFD-ABCGS specific guidelines in Section 3.6.

A demonstration project was constructed using this technology on a bridge in Washington State over Interstate 5, Bridge Number 12/118. The details of the design for this project are included in the paper "*Accelerated Bridge Construction in Washington State: From Research to Practice*" in the Fall 2012 PCI Journal, and so are construction photos and a lessons-learned section relating the contractor's feedback following construction. The development and deployment of this technology has been a success, and the owner, the Washington State Department of Transportation, continues to look for opportunities to apply the technology, along with other methods, to accelerate bridge construction in the state.

14.3.1.A Description of System

The bent system is comprised of precast columns supported by either spread footings or drilled shafts and a precast crossbeam that supports pre-stressed concrete girders. The bent is integrated with the superstructure using a cast-in-place concrete diaphragm. The crossbeam thus created is a two-stage dropped crossbeam with the lower precast portion known as the first stage crossbeam and the upper diaphragm known as the second stage of the crossbeam. The bridge deck slab is cast on top of the girders and diaphragm. This concept is illustrated in Figure 14.3.1.1-1.

The system consists of a socket connection at the foundation level and a grouted bar connection to the crossbeam. The foundation must be cast around the precast column to form the socket connection, and the interface between the column and foundation must be intentionally roughened to ensure vertical load carrying capacity. In the HfL Bent System, the connection to the crossbeam is intended to consist of large diameter bars such that fewer bars are required. These bars are grouted into steel ducts with generous diameters relative to the bars, 2 to 3 inches larger in diameter, to facilitate fit up as shown in Figure 14.3.1.1-1.

For many typical bridges a single precast column element is sufficient. However, the segmental column concept was included in the validation and HfL demonstration project.

Figure 14.3.1.1-1 Precast Bent System, Exploded View

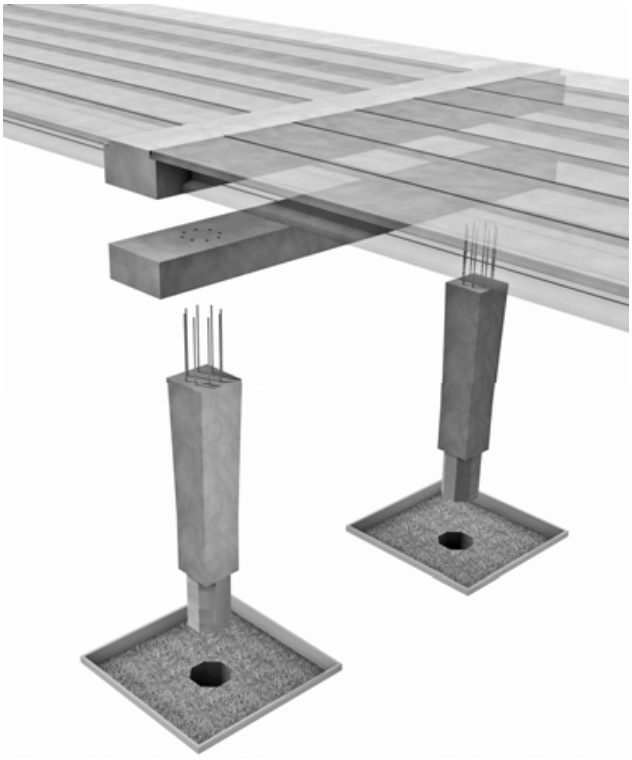

14.3.1.B Design Philosophy

This process emulates cast-in-place connections with precast elements. CIP construction joints are typically detailed with dowels and lap splices. Emulation design replaces the traditional lap splice with a grouted duct sleeve. The design of column connections is especially difficult for high seismic zones. Confinement of column reinforcing is possible with precast concrete elements. The AASHTO design specifications do not mandate the confinement reinforcing bars be continuous from the column into the adjacent members footing or crossbeam. The confinement reinforcing can be terminated in the column and separate confinement reinforcement can be added to the adjacent element.

14.3.1.C Design Provisions

Design of precast bent systems shall meet the criteria specified in Section 3.4 of AASHTO LRFD-ABCGS. The seismic analysis and design method shall be displacement-based design per Section 3.4.1.3 of AASHTO LRFD-ABCGS.

Interior joints of multi-column bents shall be considered "T" joints for joint shear analysis. Exterior joints shall be considered knee joints and require special analysis and detailing that are not addressed herein, unless special analysis determines that "T" joint analysis is appropriate for an exterior joint based on the actual bent configuration. Criteria to establish appropriate design and detailing provisions for exterior joints shall be approved by the Bridge Design Engineer.

14.3.1.C.1 *Socket-Type Footing Connections*

Where socket-type connections are used to connect precast columns to CIP spread footings or pile caps, the following requirements shall be followed.

The interface of the precast column with the footing shall be intentionally roughened to a minimum amplitude of 0.70 in. The column-to-footing shear interface shall be designed for interface shear using Section 5.7.4 of AASHTO LRFD-BDS. To account for potential shrinkage cracking around the column, the cohesion factor, c, shall be taken as zero. The friction factor, μ, and the factors, K_1 and K_2 may be taken as those for normal weight concrete placed against a clean concrete surface.

14.3.1.C.2 *Drilled Shaft*

Where socket-type connections are used to connect precast columns to drilled shafts the column-to-shaft side interface shall be intentionally roughened to a minimum amplitude of 0.70 in.

14.3.1.C.3 *Precast Column*

Precast columns and crossbeams that are used with the HfL bent system are covered by Section 8 of AASHTO LRFD-SGS. The columns of such systems are not considered precast concrete piles.

The interface shear capacity between precast column and crossbeam or between segments of precast columns shall be determined using Section 5.7.4 of AASHTO LRFD-BDS. To account for cyclic loading effects and the potential for significant cracking, the cohesion factor, c, shall be taken as zero and the friction factor, μ, shall be 0.60. The factors, K_1 and K_2 shall be 0.2 and 0.8 ksi, respectively.

14.3.1.D Geometry and General Requirements

The following geometric requirements shall apply to precast bent systems without requiring approval of the WSDOT Bridge Design Engineer:

- Columns shall be located under crossbeams.
- Grouted ducts shall have their centerlines oriented plumb.
- Footings abutting precast columns shall be poured around the end of the column.
- Grouted duct connections are not allowed in footings.
- Precast columns shall not be connected to precast footings.
- Crossbeam splices shall be located at points of contraflexure in the crossbeam and not within B_{eff} of the column, as defined in Section 3.6.12 of AASHTO LRFD-ABCGS..
- Column splices shall incorporate grouted ducts on at least one abutting end of a column within a joint. Rebar that is expected to protrude into a duct shall be cast with the rest of the column segment.
- Concrete segments may be constructed on site or at a precast manufacturing facility.
- WSDOT's *Standard Specifications* M 41-10 shall apply.

14.3.2 Geosynthetic Reinforced Soil Integrated Bridge System

The Geosynthetic Reinforced Soil Integrated Bridge System (GRS-IBS) described in AASHTO LRFD-ABCGS may be used but shall follow the design criteria given in BDM Section 7.5.2.

Proprietary SE walls supporting abutments shall not be considered preapproved, and shall not be used beyond the limits described herein unless approved by the State Foundation Engineer and the Bridge Design Engineer.

14.3.3 Precast Decks

Full-depth precast deck panels and connections shall follow the requirements In LRFD-ABCGS Section 3.6.8

14.3.4 Link Slabs

Link slabs as defined in LRFD-ABCGS 1.3.7 shall not be used.

14.4 Innovative Bridge Construction

Innovative Bridge Construction is simply an idea that encourages outside the box thinking encouraging engineers to consider principles that will enhance bridge performance, speed up construction, or add any other benefit to the industry. There is no single or handful of ideas that can contain or describe Innovative Bridge Construction. It's simply a mentality that new ideas ought to be explored. Innovation might be defined as any contribution to the bridge industry that takes bridge construction past the current standard practice of bridge construction. Some items produced recently are described in the following sections.

14.4.1 Self-Centering Columns

Self-centering columns are columns designed to restore much of their original shape after a seismic event. They're intended to improve the serviceability of a bridge after an earthquake.

Self-centering columns are constructed with a precast concrete column segment with a duct running through it longitudinally. They rest on footings with post-tensioning (PT) strand developed into them. Once the precast column piece is set on the footing, the PT strand threads through the duct and gets anchored into the crossbeam above the column. The PT strand is unbonded to the column segment. As a column experiences a lateral load, the PT strand elastically stretches to absorb the seismic energy and returns to its original tension load after the seismic event. The expectation is the column would rotate as a rigid body and the PT strand would almost spring the column back to its original orientation.

A depiction of the self-centering concept is shown in Figure 14.4.1-1.

Figure 14.4.1-1 Self-Centering Column Concept

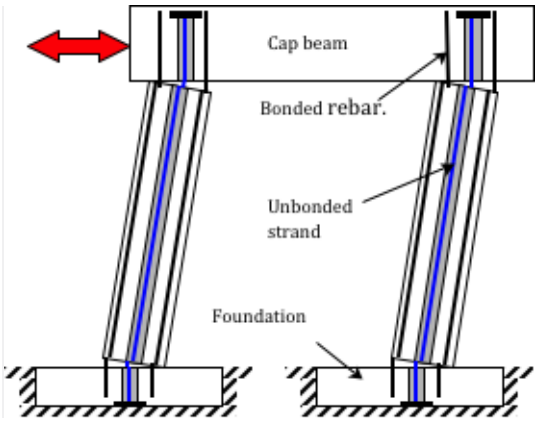

14.4.2 Shape Memory Alloy

Like self-centering columns, Shape Memory Alloy (SMA) and Engineered Cementitious Composite (ECC) products are introduced into bridge design as a means to improve ductility, seismic resilience, and serviceability of a bridge after an earthquake.

SMA is a class of alloys that are manufactured from either a combination of nickel and titanium or copper, magnesium and aluminum. The alloy is shaped into round bars in sizes similar to conventional steel reinforcement. When stressed, the SMA can undergo large deformations and return to original shape. This deformation can be recovered by either the application of heat (Shape Memory Effect) or removal of stress (Superelastic or Pseudoelastic effect) (Lagoudas 2008 and Hodgson 1990). Figure 14.4.2-1 shows the stress-strain profile for loading and unloading of SMA. The SR 99 Alaskan Way Viaduct Replacement – South Access project demonstrated that yield strengths of 55 ksi can be achieved with an initial modulus of elasticity of approximately 5400 ksi. Under service and strength limit states the SMA in the column is designed similarly to traditional mild reinforcement, the stress in the bar is limited to the yield strength. During a seismic event, when the yield stress is exceeded, the bars deform trilinearly and restore to the undeformed state as the stress dissipates.

Figure 14.4.2-1 Shape Memory Alloy Stress-Strain Model

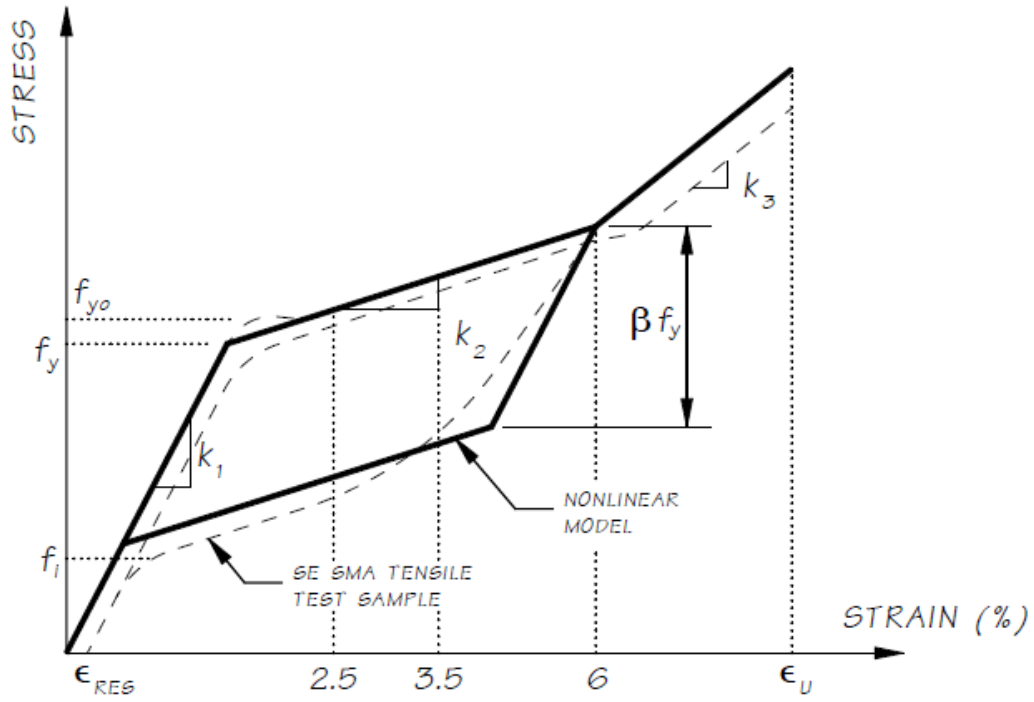

ECC is in the family of High Performance Fiber Reinforced Cementitious Composites and is similar to traditional concrete mixes, except that the mix includes a polyvinyl alcohol fiber and omits the course aggregate. ECC replaces conventional concrete in columns to provide a moderate tensile strength and increase ductility to accommodate the large deformations of the SMA. The use of ECC eliminates the spalling expected of conventional concretes in the hinge region. Figure 14.4.2-2 shows the stress-strain profile comparison of confined and unconfined ECC ($f`_c$ = 5 ksi) and conventional concrete ($f`_c$ = 4 ksi)(Li 2007 and Xu 2010).

Figure 14.4.2-2 Engineered Cementitious Concrete Stress-Strain Model

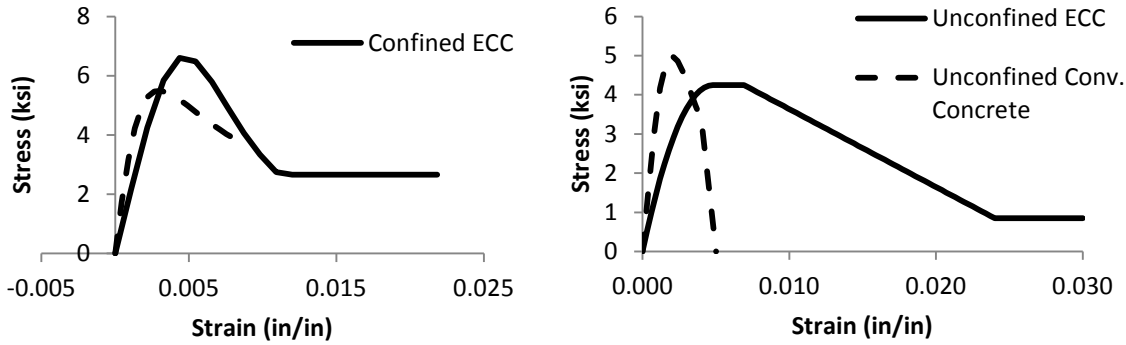

When combined in the plastic hinge zones of bridge columns, the SMA and ECC materials are designed to provide high levels of strain with a super-elastic performance to allow for large deflections with negligible permanent deformation and minimal damage. This combination of materials provides the ductility a bridge column needs to perform well in a seismic event while providing enough elasticity to restore the bridge closer to its original shape than conventional concrete and rebar, even with proper detailing (Cruz 2012).

Bars fabricated with SMA are coupled with conventional steel reinforcing located outside the plastic hinge region to reduce the amount of SMA used in the bridge column. The engineered cementitious material can be poured within the plastic hinge region separately from the rest of the column concrete.

An example of a column with ECC and SMA reinforcing in the plastic hinge regions is shown in Figure 14.4.2-3.

Figure 14.4.2-3 Shape Memory Alloy and Engineered Cementitious Column (Elevation and Sections)

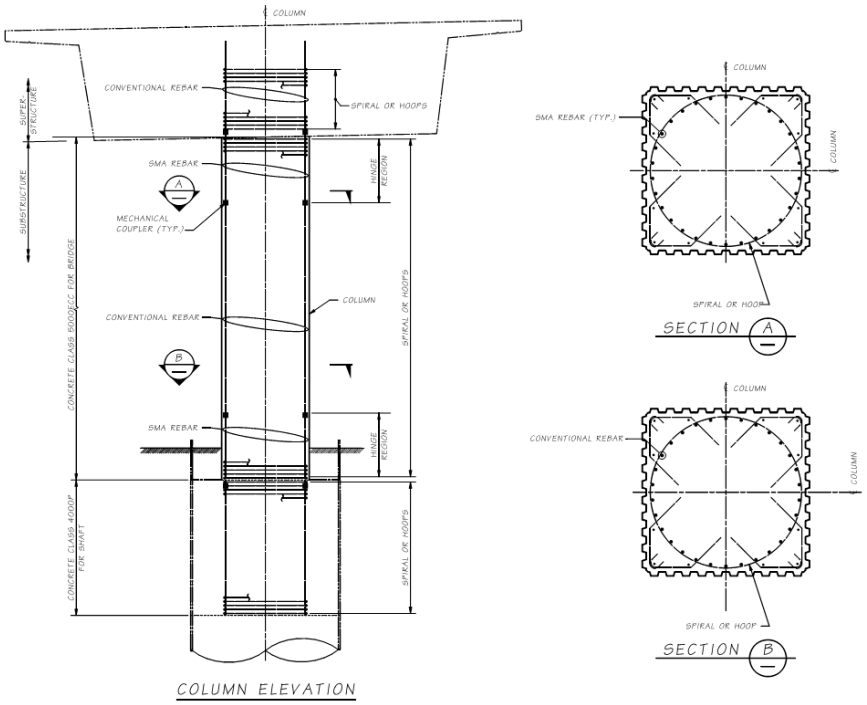

14.5 Shipping, Handling and Erection

14.5.1 Lifting Devices

Lifting locations for precast elements shall be shown in the design plans. The engineer is responsible for checking the handling stresses in the element for the lifting locations shown on the plans. Elements shall be designed using the following general criteria:

For stripping from the form, use two point picks for columns and pier crossbeams, similar to prestressed beams. Columns will require additional pick points for tipping into the vertical orientation during erection. Wall panels generally require four or more pick points when lifting horizontal and additional pick points for tipping into the vertical orientation during erection.

- Use an allowable stress of $0.16\sqrt{f'_c}$ on the static tensile stress in the concrete during handling. This is typical in the industry and provides a 50 percent buffer against exceeding the modulus of rupture during handling.
- Do not show specific lifting hardware on the drawings. Verify that at least one lifting hardware manufacturer can provide a device that can resist the anticipated loads. Consider reducing the size of the element or switch to a more sophisticated lifting system if no manufacturer can meet the required resistance. Consult with fabricators for these situations.

The contractor may choose alternate lifting locations with approval from the engineer. The contractor will provide the spacing and location of the lifting devices and submit plan and handling stress calculations for approval prior to construction of the element.

Unless buried in a subsequent cast-in-place concrete pour, lifting devices shall be recessed a minimum of 1” below the exposed surface of the precast element. Recesses at the lifting devices shall have a roughened finish. Some recesses are formed and cannot be broomed during finishing. In those cases a surface retarder can be used to provide a roughened surface. After the element is placed in its final position, the lifting device shall be removed to the base of the recess and the recess shall be filled with structural non-shrink grout or other approved patching material. In some cases the recess may be on a vertical surface and non-shrink grout may not be feasible.

14.5.2 Handling, Storage and Shipping

The contractor is responsible for the handling, storage and shipping of precast elements in such a manner that does not cause undue stress on the element. The contract specifications shall require the contractor to submit a handling, storage and shipping plan to the engineer for review prior to the construction of any element.

14.5.3 Tolerances

The tolerance of casting elements is critical to a successful installation. One of the most important tolerances is the location of the grouted duct splices. Make the dimension measurements from a common working point or line in order to specify tolerances of critical elements. Templates shall be used where practical. Center to center measurements can lead to a build-up of tolerance errors.

The typical detail drawings shall include details of maximum allowable tolerances. Include these details in all precast substructure projects.

Include a requirement in the project specifications that templates shall be used. Details of the templates shall be shown in the shop drawings. Note that erection tolerances are also extremely important, especially with placement of the crossbeam on multiple columns prior to installation of the elements at the bridge site. This is especially true for grouted splice couplers. Verify the spacing of the couplers as well as their orientation within the element. The splice reinforcement is often left longer than required in the fabrication yard so that the bars can be cut the exact length in the field as the construction progresses. The dry fit can still be done in this case with the longer bars.

14.5.4 Assembly Plans

Most bridge construction projects require contractors to submit erection plans for bridge girders. Prefabricated substructures require an even higher level of pre-construction planning. The contract specifications shall include requirements that the contractor submit an assembly plan for the construction of the entire structure including the precast substructure.

Include as a minimum the following in the assembly plan:

- size and weights of all elements
- minimum curing time of elements before shipping to the site
- picking points of all elements
- sequence of erection
- temporary shoring and bracing
- grouting procedures
- location and types of cranes
- a detailed timeline for the construction including time for curing grouts and closure pours

14.5.5 Element Sizes

The size of precast concrete substructure elements can become an issue for elements that need to be shipped long distances. For precast elements requiring shipping, use the following general guidelines for sizing precast concrete substructure elements:

- **Width**
  Keep the width, short dimension, of the element and any projecting reinforcing below 14 feet. This is to keep the widths reasonable for shipping.
- **Height**
  Keep the maximum height of any element including any projecting reinforcing less than 10 feet so the element can be transported below existing bridges.
- **Length**
  Length ought to be considered to ensure the load can be distributed well with conventional shipping equipment.
- **Weight**
  Keep the maximum weight of each element to less than 100,000 pounds in order to keep the size of site cranes reasonable.

The above limits can be increased for some projects, particularly where precast elements are not required to be shipped to the site. The designer can work with both the fabricator and contractor to size the elements based on the available equipment and the proposed shipping routes.

For large pieces, weight can be managed to make the precast pieces more workable. Weight can be minimized with lightweight concrete, voids, or smaller pieces with more joints.

14.6 Installation Method Options

Installation methods should be determined by the contractor. Designers shall include a suggested construction sequence as part of the contract plans. Considering means of installation is important for any engineering task one pursues. But it is especially important for ABC since so much of the cost will be driven by the constructability of the project.

There are a multitude of installation methods available for the construction of ABC projects. Besides the standard method of lifting and placing precast elements with mobile cranes, construction could be achieved by pivoting, launching, lateral sliding, lifting from overhead with gantry cranes, or even lifting from underneath with self-propelled modular transporters.

General information for placement by cranes is similar to that given for prestressed girders in Sections 2.3.4, and 2.6.2 of the BDM, with the exception of limiting sizes and weight which should follow Section 14.5.

Lateral sliding and self-propelled modular transporters have both been used on significant WSDOT projects.

14.6.1 Lateral Slide Systems

Bridge placement using lateral sliding is a type of ABC where the entire superstructure is constructed in a temporary location and is moved into place over a night or weekend. This method is typically used for bridge replacement of a primary roadway where the new superstructure is constructed on temporary supports adjacent and parallel to the bridge being replaced. Once the superstructure is fully constructed, the existing bridge structure is demolished, and the new bridge is moved transversely into place.

Lateral sliding can be used for switching out a new and old superstructure. It may also be used for moving an existing bridge to a new alignment, in effort to make room to build a new bridge at the original alignment.

Refer to AASHTO LRFD-ABCGS section 1.6 for design requirements and general information concerning the use of Lateral Slide Systems.

14.6.2 Self-Propelled Modular Transporter Systems

Self-Propelled Modular Transporters (SPMT) are remote-controlled, self-leveling, multi-axle platform vehicles capable of transporting several thousand tons of weight. SPMTs have the ability to move laterally, rotate 360° with carousel steering, and typically have a jack stroke of 18 to 24 inches. They have traditionally been used to move heavy equipment that is too large for standard trucks to carry.

Refer to AASHTO LRFD-ABCGS for design requirements and general information concerning the use of SPMTs.

14.7 Examples of Accelerated and Innovative Bridge Construction

Below is a list of WSDOT projects where ABC has been utilized. The list is separated by the different types of construction. For additional information on a specific project contact the Bridge Office.

Lateral Sliding

I-5, Skagit River Bridge – Bridge No. 5/712
Mount Vernon and Burlington, Washington

SR 104, Hood Canal Bridge–Bridge Number 104/4 and 104/5 East and West Approaches–Port Gamble, Washington

SR 167, Puyallup River Bridge–Bridge Number 167/20E
Puyallup, Washington

Precast Deck

I-5, 38th Street–Bridge Number 5/430 Tacoma, Washington

SR 104, Hood Canal Bridge–Bridge Number 104/5
East Half Partial Deck Panel–Port Gamble, Washington

Precast Crossbeam

SR 16, Eastbound Nalley Valley–Bridge Number 16/6W-N
Tacoma, Washington

SR 520/SR 202 Interchange–Bridge Number 520/46
Redmond, Washington

I-5, Highways for Life Demonstration Project–Bridge Number 12/118
Grand Mound, Washington

SR 520, Floating Bridge & Landings – Bridge Number 520/7.5
Seattle, Washington

Precast Column

SR 520, 36th Street Bridge–Bridge Number 520/36.5
Redmond, Washington

I-405, NE 8th Street Ramp–Bridge Number 405/43
Bellevue, Washington

SR 16, Cedar Street and Union Avenue Bridges
Bridge Numbers 16/12E, 16/12W, 16/14E, and 16/14W
Tacoma, Washington

Adjacent Deck Bulb Tee Beams

I-5, Skagit River Bridge–Bridge Number 5/712
Mount Vernon and Burlington, Washington

I-90, Easton Avenue Bridge – Bridge Number 90/121
Easton, Washington

Self-Propelled Modular Transporter

SR 104, Hood Canal Bridge–Bridge Number 104/4 and 104/5
East and West Approaches–Port Gamble, Washington

SR 433, Lewis & Clark Bridge – Bridge 433/1
Longview, Washington–Rainier, Oregon

Other Precast Elements

SR 303, Manette Bridge–Bridge Number 303/4A
Bremerton, Washington

Chapter 15 Structural Design Requirements for Design-Build Contracts Contents

15.1 Manual Description 15-1
15.1.1 Purpose 15-1
15.1.2 Specifications 15-1
15.2 Bridge Configuration Criteria 15-2
15.2.1 General 15-2
15.2.1.A Structure Conceptual Plan 15-2
15.2.1.B Bridge Redundancy 15-2
15.2.1.C Bridge Deck Drainage 15-2
15.2.2 Railroad Crossings 15-2
15.2.2.A Clearances 15-2
15.2.2.B Crash Walls 15-2
15.2.2.C Substructure 15-3
15.2.3 Temporary Bridges 15-3
15.2.4 Inspection and Maintenance Access 15-3
15.2.4.A General 15-3
15.2.4.B Bearings 15-3
15.2.4.C Safety Cables, Handrails, and Anchors 15-3
15.2.4.D Abutment Slopes 15-3
15.2.4.E Access and Lighting 15-3
15.2.5 Bridge Types 15-4
15.2.6 Aesthetic Design Elements 15-4
15.2.7 Architectural Design Standards 15-5
15.2.8 Methods 15-5
15.2.9 Design-Builder Urban Design Team 15-5
15.2.10 Analysis and Design Criteria for Structural Widenings and Modifications 15-6
15.2.11 Bridge Security 15-6
15.2.11.A General 15-6
15.2.11.B Natural Surveillance and Territorial Reinforcement 15-7
15.2.11.C Hard Armoring 15-7

15.3 Load Criteria 15-8
15.3.1 Scope 15-8
15.3.2 Load Factors and Load Combinations 15-8
15.3.3 Permanent Loads 15-8
15.3.3.A Future Deck Overlay Requirement 15-8
15.3.4 Live Loads. 15-9
15.3.4.A Design Live Load. 15-9
15.3.4.B Live Load Deflection Evaluation 15-9
15.3.4.C Distribution to Superstructure 15-9
15.3.4.C.1 Cross sections a, b, c, e, k, and also i and j if sufficiently connected to act as a unit from LRFD-BDS Table 4.6.2.2.1-1 15-9
15.3.4.C.2 Cross section Type d from LRFD-BDS Table 4.6.2.2.1-1 15-10
15.3.4.C.3 Distribution to Substructure 15-10
15.3.4.C.4 Distribution to Crossbeam 15-10
15.3.5 Noise Barrier Walls 15-10
15.4 Seismic Design and Retrofit 15-11
15.4.1 General 15-11
15.4.2 WSDOT Additions and Modifications to AASHTO Guide Specifications for LRFD Seismic Bridge Design 15-11
15.4.2.A Definitions 15-11
15.4.2.B Earthquake Resisting Systems (ERS) Requirements for Seismic Design Categories (SDCs) C and D 15-12
15.4.2.C Seismic Ground Shaking Hazard 15-13
15.4.2.D Selection of Seismic Design Category (SDC) 15-13
15.4.2.E Temporary and Staged Construction. 15-14
15.4.2.F Load and Resistance Factors 15-14
15.4.2.G Balanced Stiffness Requirements and Balanced Frame Geometry Recommendation 15-14
15.4.2.H Selection of Analysis Procedure to Determine Seismic Demand 15-14
15.4.2.I Member Ductility Requirement for SDCs C and D 15-14
15.4.2.J Longitudinal Restrainers 15-14
15.4.2.K Abutments 15-15
15.4.2.K.1 4.2.11.1 - General 15-15
15.4.2.K.2 4.2.11.2 - Longitudinal Direction 15-15
15.4.2.K.3 4.2.11.2.1 - Abutment Stiffness and Passive Pressure Estimate 15-16
15.4.2.K.4 4.2.11.2.2 - Calculation of Best Estimate Passive Pressure Pp 15-16
15.4.2.K.5 4.2.11.2.3 - Calculation of Passive Soil Stiffness 15-17
15.4.2.K.6 4.2.11.3 - Transverse Direction. 15-17
15.4.2.K.7 4.2.11.4 - Curved and Skewed Bridges 15-18

15.4.2.L Foundation – General . . . 15-18
15.4.2.M Foundation – Spread Footing . . . 15-18
15.4.2.N Procedure 3: Nonlinear Time History Method . . . 15-18
15.4.2.O I_{eff} for Box Girder Superstructure . . . 15-18
15.4.2.P Foundation Rocking . . . 15-18
15.4.2.Q Drilled Shafts . . . 15-18
15.4.2.R Longitudinal Direction Requirements . . . 15-19
15.4.2.S Liquefaction Design Requirements . . . 15-19
15.4.2.T Reinforcing Steel . . . 15-19
15.4.2.U Concrete Modeling . . . 15-19
15.4.2.V Expected Nominal Moment Capacity . . . 15-19
15.4.2.W Interlocking Bar Size . . . 15-19
15.4.2.X Splicing of Longitudinal Reinforcement in Columns Subject to Ductility Demands for SDCs C and D . . . 15-20
15.4.2.Y Development Length for Column Bars Extended into Oversized Pile Shafts for SDCs C and D . . . 15-20
15.4.2.Z Lateral Confinement for Oversized Pile Shaft for SDCs C and D . . . 15-20
15.4.2.AA Lateral Confinement for Non-Oversized Strengthened Pile Shaft for SDCs C and D . . . 15-20
15.4.2.AB Requirements for Capacity Protected Members . . . 15-20
15.4.2.AC Superstructure Capacity Design for Transverse Direction (Integral Bent Cap) for SDCs C and D . . . 15-21
15.4.2.AD Superstructure Design for Non Integral Bent Caps for SDCs B, C, and D . . . 15-21
15.4.2.AE Integral Bent Cap Joint Shear Design . . . 15-21
15.4.2.AF Cast-in-Place and Precast Concrete Piles . . . 15-21
15.4.2.AG Seismic Resiliency using Innovative Materials and Construction . . . 15-21
15.4.3 Seismic Design Requirements for Bridge Modifications and Widening Projects . . . 15-22
15.4.3.A Seismic Analysis and Retrofit Policy . . . 15-22
15.4.3.B Design and Detailing Considerations . . . 15-22
15.4.3.B.1 Support Length . . . 15-22
15.4.3.B.2 Connections Between Existing and New Elements . . . 15-22
15.4.3.B.3 Differential Settlement . . . 15-22
15.4.3.B.4 Foundation Types . . . 15-23
15.4.3.B.5 Existing Strutted Columns . . . 15-23
15.4.3.B.6 Non Structural Element Stiffness . . . 15-23
15.4.3.B.7 Isolation Bearings . . . 15-23
15.4.4 Seismic Retrofitting of Existing Bridges . . . 15-23
15.4.4.A Seismic Analysis Requirements . . . 15-24
15.4.4.B Seismic Retrofit Design . . . 15-24
15.4.4.C Earthquake Restrainers . . . 15-24
15.4.4.D Isolation Bearings . . . 15-24

15.5 Concrete Structures . . . 15-25
15.5.1 General . . . 15-25
15.5.2 Materials . . . 15-25
15.5.2.A Concrete . . . 15-25
15.5.2.A.1 Cast-in-place (CIP) Concrete . . . 15-25
15.5.2.A.2 Modulus of Elasticity . . . 15-25
15.5.2.A.3 Shrinkage and Creep . . . 15-25
15.5.2.A.4 Grout . . . 15-25
15.5.2.A.5 Mass Concrete . . . 15-26
15.5.2.A.6 Shotcrete . . . 15-26
15.5.2.A.7 Lightweight Aggregate Concrete . . . 15-26
15.5.2.B Reinforcing Steel . . . 15-26
15.5.2.B.1 Grades . . . 15-26
15.5.2.B.2 Compressive Development Length . . . 15-26
15.5.2.B.3 Splices . . . 15-26
15.5.2.B.4 Welded Wire Reinforcement in Prestressed Concrete Girders, Walls, Barriers and Deck Panels . . . 15-27
15.5.2.B.5 Reinforcing Bar Dowels and Resin Bonded Anchors . . . 15-27
15.5.2.C Prestressing Steel . . . 15-27
15.5.2.D Post-Tensioning Systems . . . 15-27
15.5.3 Design Considerations . . . 15-28
15.5.3.A Service and Fatigue Limit States . . . 15-28
15.5.3.B Strength Limit State . . . 15-28
15.5.3.C Post-Tensioning . . . 15-28
15.5.4 Superstructures . . . 15-28
15.5.4.A Reinforced Concrete Superstructures . . . 15-28
15.5.4.B Box Girder Superstructures . . . 15-28
15.5.4.B.1 Intermediate Diaphragms for Curved Concrete Box Girder Bridges . . . 15-28
15.5.4.B.2 Temperature Effects . . . 15-29
15.5.4.B.3 Drains . . . 15-29
15.5.4.C Prestressed Concrete Girder Superstructures . . . 15-29
15.5.4.C.1 WSDOT Standard Girder Types and Construction Sequences . . . 15-29
15.5.4.C.2 Superstructure Continuity . . . 15-29
15.5.4.C.3 Continuous Structure Configuration . . . 15-29
15.5.4.C.4 Girder Ends . . . 15-29
15.5.4.C.5 Diaphragms . . . 15-30
15.5.4.C.6 Barrier and Sidewalk Load Distribution . . . 15-30
15.5.4.C.7 Composite Action . . . 15-30
15.5.4.C.8 Dead Loads . . . 15-30
15.5.4.C.9 Girder Stirrups . . . 15-30
15.5.4.C.10 Transformed Section Properties . . . 15-30
15.5.4.C.11 Deck Shrinkage . . . 15-31
15.5.4.C.12 Deck Girder Superstructures . . . 15-31

15.5.4.C.13 Slab Girders . . . 15-31
15.5.4.C.14 Deck Bulb-Tee Girders . . . 15-31
15.5.4.C.15 Wide Flange Deck Girders . . . 15-31
15.5.4.C.16 Wide Flange Thin Deck Girders . . . 15-31
15.5.4.C.17 Tub Girders . . . 15-31
15.5.4.C.18 Spliced Prestressed Concrete Girders . . . 15-32
15.5.5 Concrete Bridge Decks . . . 15-32
15.5.5.A Bridge Deck Requirements . . . 15-32
15.5.5.B Bridge Deck Reinforcement . . . 15-32
15.5.5.C Stay-in-Place (SIP) Deck Panels . . . 15-33
15.5.5.D Bridge Deck Protection . . . 15-33
15.5.5.E Bridge Deck HMA Paving . . . 15-33
15.6 Steel Structures . . . 15-34
15.6.1 Design Considerations . . . 15-34
15.6.1.A Codes, Specification, and Standards . . . 15-34
15.6.1.B WSDOT Steel Bridge Practice . . . 15-34
15.6.1.C Preliminary Girder Proportioning . . . 15-34
15.6.1.D Bridge Steels . . . 15-35
15.6.1.E Plate Sizes . . . 15-35
15.6.1.F Fasteners . . . 15-35
15.6.2 Girder Bridges . . . 15-35
15.6.2.A Tub or Box Girders . . . 15-35
15.6.2.B Fracture Critical Superstructures . . . 15-36
15.6.3 Design of I-Girders . . . 15-36
15.6.3.A Limit States for LRFD-BDS . . . 15-36
15.6.3.B Composite Section . . . 15-37
15.6.3.C Flanges . . . 15-37
15.6.3.D Webs . . . 15-37
15.6.3.E Transverse Stiffeners . . . 15-37
15.6.3.F Longitudinal Stiffeners . . . 15-38
15.6.3.G Bearing Stiffeners . . . 15-38
15.6.3.H Cross Frames . . . 15-38
15.6.3.I Bottom Laterals . . . 15-38
15.6.3.J Bolted Field Splice for Girders . . . 15-38
15.6.3.K Camber . . . 15-39
15.6.3.L Bridge Deck Placement Sequence . . . 15-40
15.6.3.M Bridge Bearings for Steel Girders . . . 15-40
15.6.3.N Surface Roughness and Hardness . . . 15-40
15.6.3.O Welding . . . 15-40
15.6.3.P Shop Assembly . . . 15-40

15.6.4 Plan Details . . . 15-41
15.6.4.A General . . . 15-41
15.6.4.B Framing Plan . . . 15-41
15.6.4.C Girder Elevation . . . 15-41
15.6.4.D Typical Girder Details . . . 15-41
15.6.4.E Cross Frame Details . . . 15-42
15.6.4.F Camber Diagram and Bearing Stiffener Rotation . . . 15-42
15.6.4.G Bridge Deck . . . 15-42
15.6.4.H Handrail Details, Inspection Lighting, and Access . . . 15-43
15.6.4.I Box Girder Details . . . 15-43
15.6.5 Painting of Existing Steel Bridges . . . 15-43
15.6.6 Corrosion of Steel Foundations and Buired Structures . . . 15-43
15.7 Substructure Design . . . 15-44
15.7.1 General Substructure Considerations . . . 15-44
15.7.1.A Foundation Seals . . . 15-44
15.7.1.B Scour . . . 15-44
15.7.1.C Combination of Extreme Event Effects . . . 15-44
15.7.1.C.1 Downdrag . . . 15-44
15.7.1.C.2 Lateral Ground Displacement . . . 15-44
15.7.1.C.3 Scour . . . 15-44
15.7.2 Foundation Modeling for Seismic Loads . . . 15-44
15.7.2.A General . . . 15-44
15.7.2.B Bridge Model Section Properties . . . 15-44
15.7.2.B.1 Cracked Properties for Columns . . . 15-44
15.7.2.B.2 Shaft Properties . . . 15-45
15.7.2.B.3 Cast-in-Place Pile Properties . . . 15-45
15.7.2.C Spread Footing Modeling Methods . . . 15-45
15.7.2.D Deep Foundation Modeling Methods . . . 15-45
15.7.2.D.1 Group Effects . . . 15-45
15.7.2.D.2 Shaft Caps and Pile Footings . . . 15-45
15.7.2.E Design of Deep Foundations for Lateral Forces . . . 15-46
15.7.2.E.1 Determination of Tip Elevations . . . 15-46
15.7.2.E.2 Design for Lateral Loads . . . 15-46
15.7.3 Column Design . . . 15-46
15.7.3.A Shear Design . . . 15-46
15.7.3.B Column Silos . . . 15-46
15.7.3.C Longitudinal Reinforcement . . . 15-46
15.7.3.D Longitudinal Reinforcement Splices . . . 15-46
15.7.3.E Longitudinal Reinforcement Development . . . 15-47
15.7.3.E.1 Crossbeams . . . 15-47
15.7.3.E.2 Footings . . . 15-47
15.7.3.E.3 Drilled Shafts . . . 15-47

15.7.3.F Transverse Reinforcement 15-47
15.7.3.F.1 General 15-47
15.7.3.F.2 Spiral Splices and Hoops 15-47
15.7.3.G Reduced Column Section 15-48
15.7.4 Crossbeam 15-48
15.7.5 Abutment Design and Details 15-48
15.7.5.A General 15-48
15.7.5.A.1 Bent-Type and Isolated Abutments 15-48
15.7.5.A.2 Abutments on Structural Earth (SE) Walls and Geosynthetic Walls 15-48
15.7.5.B Embankment and Backfill 15-48
15.7.5.B.1 General Clearances 15-48
15.7.5.B.2 Abutments on SE Walls and Geosynthetic Walls 15-48
15.7.5.B.3 Drainage and Backfill 15-49
15.7.5.C Abutment Loading 15-49
15.7.5.C.1 Earthquake Load 15-49
15.7.5.C.2 Bearing Forces 15-49
15.7.5.D Abutment Details 15-49
15.7.5.D.1 Bearing Seats 15-49
15.7.5.D.2 Transverse Girder Stops 15-49
15.7.5.D.3 Abutment Walls 15-49
15.7.6 Abutment Wing Walls and Curtain Walls 15-50
15.7.7 Footing Design 15-50
15.7.7.A General Footing Criteria 15-50
15.7.7.B Spread Footing Design 15-50
15.7.7.B.1 Foundation Design 15-50
15.7.7.B.2 Structural Design 15-50
15.7.7.C Pile-Supported Footing Design 15-50
15.7.7.C.1 Pile Embedment, Clearance, and Rebar Mat Location 15-50
15.7.7.C.2 Concrete Design 15-51
15.7.8 Shafts 15-51
15.7.8.A Axial Resistance 15-51
15.7.8.B Structural Design and Detailing 15-51
15.7.9 Piles and Piling 15-52
15.7.9.A Pile Types 15-52
15.7.9.B Pile Groups 15-53
15.7.9.C Battered Piles 15-53
15.7.9.D Structural Design and Detailing of CIP Concrete Piles 15-53
15.7.9.E Structural Steel Pipe Piles 15-53
15.7.9.F Pile Resistance 15-53
15.7.10 Concrete-Filled Steel Tubes 15-53
15.7.10.A Design Requirements 15-53

15.8 Walls and Buried Structures 15-54
15.8.1 Retaining Walls 15-54
15.8.1.A General 15-54
15.8.1.B Loads 15-54
15.8.1.C Design of Reinforced Concrete Retaining Walls 15-54
15.8.1.D Design of Cantilever Soldier Pile and Soldier Pile Tieback Walls 15-54
15.8.1.D.1 Ground Anchors (Tiebacks) 15-54
15.8.1.D.2 Design of Soldier Pile 15-54
15.8.1.D.3 Design of Lagging 15-54
15.8.1.D.4 Design of Fascia Panels 15-54
15.8.1.E Design of Structural Earth Walls 15-54
15.8.1.E.1 Pre-approved Proprietary Structural Earth Walls 15-54
15.8.1.F Design of Standard Plan Geosynthetic Walls 15-54
15.8.1.G Design of Soil Nail Walls 15-54
15.8.1.H Scour of Retaining Walls 15-54
15.8.1.I Miscellaneous Items 15-54
15.8.2 Noise Barrier Walls 15-55
15.8.2.A General 15-55
15.8.2.B Loads 15-55
15.8.2.C Design 15-55
15.8.2.C.1 Standard Plan Noise Barrier Walls 15-55
15.8.2.C.2 Non-Standard Noise Barrier Walls 15-55
15.8.3 Buried Structures 15-55
15.8.3.A General Policy 15-55
15.8.3.B General Design Requirements 15-55
15.8.3.C Application of Loads 15-55
15.8.3.D Scour 15-56
15.8.3.E Corrosion 15-56
15.8.3.F Worker, Pedestrian and Bicycle Fall Protection 15-56
15.8.3.G W-Beam Guardrail on Buried Structures (TL-3) 15-56
15.8.3.H Deflection 15-56
15.8.3.I Control of Cracking 15-56
15.8.3.J Joints 15-56
15.8.3.K Deck Protection and Approach Slabs 15-56
15.8.3.L Metal Structural Plate Structures 15-57
15.8.3.M Design of Detention Vaults 15-57
15.8.3.N Design of Tunnels 15-57

15.9 Bearings and Expansion Joints 15-58
15.9.1 Expansion Joints 15-58
15.9.1.A General Considerations 15-58
15.9.1.A.1 Concrete Bridges 15-58
15.9.1.A.2 Steel Bridges 15-58
15.9.1.B General Design Criteria 15-58
15.9.1.B.1 Shrinkage Effects 15-59
15.9.1.B.2 Thermal Effects 15-59
15.9.1.C Small Movement Range Joints 15-60
15.9.1.C.1 Compression Seals 15-60
15.9.1.C.2 Rapid-Cure Silicone Sealants 15-60
15.9.1.C.3 Asphaltic Plug Joints 15-60
15.9.1.C.4 Headers 15-60
15.9.1.D Medium Movement Range Joints 15-61
15.9.1.D.1 Steel Sliding Plate Joints 15-61
15.9.1.D.2 Strip Seal Joints 15-61
15.9.1.D.3 Bolt-down Panel Joints 15-61
15.9.1.E Large Movement Range Joints 15-61
15.9.1.E.1 Steel Finger Joints 15-61
15.9.1.E.2 Modular Expansion Joints 15-62
15.9.2 Bearings 15-63
15.9.2.A General Considerations 15-63
15.9.2.B Force Considerations 15-63
15.9.2.C Movement Considerations 15-63
15.9.2.C.1 Elastomeric and Fabric Pad Bearings 15-63
15.9.2.C.2 HLMR Bearings 15-63
15.9.2.D Detailing Considerations 15-64
15.9.2.E Bearing Types 15-64
15.9.2.E.1 Elastomeric Bearings 15-64
15.9.2.E.2 Fabric Pad Sliding Bearings 15-65
15.9.2.E.3 Pin Bearings 15-66
15.9.2.E.4 Rocker and Roller Type Bearings 15-66
15.9.2.E.5 Spherical Bearings 15-66
15.9.2.E.6 Disc Bearings 15-66
15.9.2.E.7 Seismic Isolation Bearings 15-66
15.9.2.F Miscellaneous Details 15-66
15.9.2.F.1 Temporary Support before Grouting Masonry Plate 15-66
15.9.2.F.2 Anchor Bolts 15-67
15.9.2.G Contract Drawing Representation 15-67
15.9.2.H Shop Drawing Review 15-67
15.9.2.I Bearing Replacement Considerations 15-67

15.10 Signs, Barriers, Bridge Approach Slabs, and Utilities 15-68
15.10.1 Sign and Luminaire Supports 15-68
15.10.2 Bridge Traffic Barriers 15-68
15.10.2.A General Guidelines and Policy 15-68
15.10.3 At Grade Concrete Barriers 15-68
15.10.3.A Traffic Barrier Moment Slab Design Criteria 15-68
15.10.3.A.1 Structural Capacity 15-68
15.10.3.A.2 Global Stability 15-68
15.10.3.A.3 Geometry 15-68
15.10.3.A.4 Soil Reinforcement 15-68
15.10.3.A.5 Wall Panel 15-69
15.10.3.B Precast Concrete Barrier 15-69
15.10.4 Bridge Traffic Barrier Rehabilitation 15-69
15.10.4.A General Guidelines and Policy 15-69
15.10.4.A.1 Design Criteria 15-69
15.10.5 Bridge Railing 15-70
15.10.5.A General Guidelines and Policy 15-70
15.10.6 Bridge Approach Slabs 15-70
15.10.6.A Bridge Approach Slab Design Criteria 15-70
15.10.6.B Bridge Approach Slab Detailing 15-71
15.10.6.C Skewed Bridge Approach Slabs 15-71
15.10.6.D Approach Anchors and Expansion Joints 15-71
15.10.6.E Bridge Approach Slab Addition or Retrofit to Existing Bridges 15-71
15.10.6.F Bridge Approach Slab Staging 15-72
15.10.7 Traffic Barrier on Bridge Approach Slabs 15-72
15.10.7.A Bridge Approach Slab over Wing Walls, Cantilever Walls or Geosynthetic Walls 15-72
15.10.7.B Bridge Approach Slab over SE Walls 15-72
15.10.8 Utilities Installation on New and Existing Structures 15-72
15.10.8.A General Concepts 15-72
15.10.8.A.1 Coating and Corrosion Protection 15-72
15.10.8.B Utility Design Criteria 15-73
15.10.8.B.1 Utility Location 15-73
15.10.8.B.2 Termination at the Bridge Ends 15-73
15.10.8.B.3 Utility Expansion 15-73
15.10.8.B.4 Utility Blockouts 15-73
15.10.8.B.5 Gas Lines or Volatile Fluids 15-73
15.10.8.B.6 Water Lines 15-73
15.10.8.B.7 Sewer Lines 15-74
15.10.8.B.8 Electrical (Power and Communications) 15-74
15.10.8.C Box/Tub Girder Bridges 15-74
15.10.8.D Traffic Barrier Conduit 15-74
15.10.8.E Conduit Types 15-75

15.10.8.F Utility Supports . . . 15-75
15.10.8.F.1 Pipe Hangers . . . 15-75
15.10.8.F.2 Surface Mounting . . . 15-75
15.10.9 Review Procedure for Utility Installations on Existing Structures . . . 15-75
15.10.10 Anchors for Permanent Attachments . . . 15-76
15.10.11 Drainage Design . . . 15-76
15.10.11.A Geometrics . . . 15-76
15.10.11.B Hydrology . . . 15-76
15.10.11.C On Bridge Systems . . . 15-76
15.11 Detailing Practices . . . 15-77
15.11.1 Standard Practices . . . 15-77
15.11.1.A Drawing Orientation and Layout Control . . . 15-77
15.11.1.B Lettering . . . 15-77
15.11.1.B.1 General . . . 15-77
15.11.1.B.2 Dimensioning . . . 15-77
15.11.1.C Line Work . . . 15-78
15.11.1.D Scale . . . 15-78
15.11.1.E Graphic Symbols . . . 15-78
15.11.1.F Structural Sections, Views and Details . . . 15-78
15.11.1.G Miscellaneous . . . 15-79
15.11.1.H RFC Revisions . . . 15-79
15.11.1.I Title Block . . . 15-79
15.11.1.J Reinforcement Detailing . . . 15-80
15.11.2 Bridge Office Standard Drawings and Office Examples . . . 15-81
15.11.2.A General . . . 15-81
15.11.2.B Use of Standards . . . 15-81
15.11.3 Plan Sheets . . . 15-81
15.11.3.A Layout . . . 15-81
15.11.3.B General Notes/Construction Sequence . . . 15-82
15.11.3.C Footing Layout . . . 15-82
15.11.3.D Piles/Shafts . . . 15-82
15.11.3.E Abutment . . . 15-82
15.11.3.F Intermediate Piers/Bents . . . 15-83
15.11.3.G Bearing Details . . . 15-83
15.11.3.H Framing Plan . . . 15-83
15.11.3.I Typical Section . . . 15-83
15.11.3.J Girders/Diaphragms . . . 15-83
15.11.3.K Bridge Deck Reinforcement . . . 15-83
15.11.3.L Expansion Joints . . . 15-83
15.11.3.M Traffic Barrier . . . 15-83
15.11.3.N Bridge Approach Slab . . . 15-83
15.11.3.O Barlist . . . 15-84

15.11.4 Structural Steel 15-84
15.11.4.A General 15-84
15.11.4.B Bars 15-84
15.11.4.C Plates 15-84
15.11.4.D Strips 15-84
15.11.4.E Labeling 15-84
15.11.5 Aluminum Section Designations 15-85
15.11.6 Abbreviations 15-85
15.12 Bridge Load Rating 15-86
15.12.1 General 15-86
15.12.2 Load Rating Software 15-86
15.13 Appendices 15-87
Appendix 15.2-A1 Conceptual Plan Checklist 15-88
15.99 References 15-89

Chapter 15 Structural Design Requirements for Design-Build Contracts

15.1 Manual Description

15.1.1 Purpose

This chapter provides the contractual requirements for structural design of WSDOT projects that supersede AASHTO LRFD *Bridge Design Specifications* (LRFD-BDS) and AASHTO *Guide Specifications for LRFD Seismic Bridge Design* (LRFD-SGS).

15.1.2 Specifications

This manual and the following AASHTO Specifications are the foundation design criteria and design practice documents used to design highway bridges and structures in Washington State:

- AASHTO LRFD *Bridge Design Specifications* (LRFD-BDS)
- AASHTO *Guide Specifications for LRFD Seismic Bridge Design* (LRFD-SGS)
- WSDOT *Standard Plans* M 21-01 – A-50 Series Standard Plans for Embankment Geometry at Bridge Ends

15.2 Bridge Configuration Criteria

15.2.1 General

15.2.1.A Structure Conceptual Plan

The Structure Conceptual Plan is part of the Design-Build project Request For Proposal (RFP) Appendix M. The purpose of the Structure Conceptual Plan is to present a baseline structural concept where bridges or buried structures are assumed by those preparing the RFP to be appropriate based on the criteria and requirements specified in the RFP. The Structure Conceptual Plan is developed to be consistent with the overall baseline civil roadway concept of the RFP Appendix M. The content of the Structure Conceptual Plan includes the items listed in the Conceptual Plan Checklist of Appendix 15.2-A1.

15.2.1.B Bridge Redundancy

Bridge substructure shall have the following minimum number of columns to be considered to provide conventional levels of redundancy in accordance with LRFD-BDS Section 1.3.4:

- One column minimum for roadway widths 40′ wide and under.
- Two columns minimum for roadway widths over 40′ to 60′.
- Three columns minimum for roadway widths over 60′.

Bridge superstructure shall have the following minimum number of webs to be considered to provide conventional levels of redundancy in accordance with LRFD-BDS Section 1.3.4:

- Three webs minimum for roadway widths 32′ and under.
- Four webs minimum for roadway widths over 32′. See Bridge Standard Drawing 2.3-A2-1 for details.

15.2.1.C Bridge Deck Drainage

Roadway and bridge deck profiles shall be adjusted as much as possible to avoid having bridge drains on the bridge. If bridge geometry is such that drains are required, the number of drains should be minimized as much as possible while still providing a bridge deck drainage design that meets required standards. The bridge drain assembly and system shall be designed for low maintenance.

15.2.2 Railroad Crossings

15.2.2.A Clearances

For railroad overcrossings, minimum horizontal and vertical clearances shall be as described in the *Union Pacific Railroad-BNSF Railway Guidelines for Railroad Grade Separation Projects*.

15.2.2.B Crash Walls

Crash walls, when required, shall be designed to conform to the criteria of the *AREMA Manual*. To determine when crash walls are required, consult the following:

- *Union Pacific Railroad-BNSF Railway Guidelines for Railroad Grade Separation Projects.*
- *AREMA Manual*
- HQ Design Office Railroad Liaison

15.2.2.C Substructure

For highway over railway grade separations, the top of footings for bridge piers or retaining walls within 25 feet of the nearest existing or future track shall be 6 feet or more below the bases of rail. The footing face shall not be closer than 12 feet (measured perpendicular) to the centerline of the track. Consult with the *Union Pacific Railroad-BNSF Railway Guidelines for Railroad Grade Separation Projects* for additional requirements.

15.2.3 Temporary Bridges

Temporary bridges shall be designed to meet the requirement of BDM Section 10.13 and other BDM Sections as applicable.

15.2.4 Inspection and Maintenance Access

15.2.4.A General

Bridges shall be configured to allow inspectors direct access to bearings, and access to within 3-feet of superstructure surfaces. See also Figure 2.3.11-1 for under-bridge-inspection-truck clearance requirements.

15.2.4.B Bearings

Adequate clearance for maintenance and inspection of bearings shall be provided. The clearance shall be adequate to inspect, remove and replace the bearings.

Jacking points shall be provided for bearing replacement. Jacking points shall be designed to support 200 percent of the calculated lifting load.

15.2.4.C Safety Cables, Handrails, and Anchors

Built-up plate girder bridges with girders 5-feet deep or greater in depth shall be detailed with safety handrails for inspectors walking the bottom flanges. At large gusset plate locations on truss bridges (3-feet wide or wider), cables or lanyard anchors shall be placed on the inside face of the truss so inspectors can utilize bottom lateral gusset plates to stand on while traversing around the main truss gusset plates.

15.2.4.D Abutment Slopes

Slopes in front of abutments shall provide enough overhead clearance to the bottom of the superstructure to access bearings for inspection and possible replacement (3-feet minimum for girder type bridges and 5-feet minimum for concrete slabs).

15.2.4.E Access and Lighting

1. **Concrete Box and Prestressed Concrete Tub Girders**

   See Section 5.2.6 for design criteria.

2. **Composite Steel Box Girders**

   See Section 6.4.9 for design criteria.

3. **Access Doors, Lighting, Receptacles and Penetrations**

   All Access doors shall have a minimum 2′-6″ diameter or 2′-6″ square clear opening. Lock box latches shall be installed on all access doors accessible from ground level. Access hatches shall swing into the box girders and shall be placed at locations that do not impact traffic. Lighting and receptacle requirements shall be in accordance

with WSDOT *Design Manual* Chapter 1040. Air vents shall be in accordance with Figures 5.2.6-1 and 5.2.6-2.

Box girder penetrations (vents and drain holes) greater than one inch in diameter through the exterior shall be covered with galvanized wire mesh screen to prevent vermin and birds from accessing the interior of the box girder. The wires shall have a maximum spacing of ¼ inch in both directions.

15.2.5 Bridge Types

Bridges shall conform to the following superstructure depth-to-span ratios based on past WSDOT experience, superseding LRFD-BDS Section 2.5 2.6.3.

The optional live load deflection limits of LRFD-BDS Sections 3.6.1.3.2 and 2.5.2.6.2 shall be satisfied.

For both simple and continuous spans, the span length is the horizontal distance between centerlines of bearings.

Refer to Section 2.2.4 for superstructure depth requirements for inspection and maintenance access.

For the required minimum depth to span ratios see Section 2.4.1.

WSDOT restricts the use of cast-in-place reinforced concrete Tee-Beam girder for bridge superstructure. This type of superstructure may only be used for bridges with tight curvatures or irregular geometry upon Bridge Design Engineer approval.

WSDOT restricts the use of timber girders for bridge superstructures to non-vehicle use bridges or temporary bridges.

15.2.6 Aesthetic Design Elements

The primary goal of the aesthetic design is to build visual compatibility between the new elements and their current surroundings. The existing elements, along with proposed and existing structures, typically establish an identifiable visual characteristic. These existing elements such as lighting fixtures, railings street hardware, construction materials, colors, and finishes, are to be included as an integral part of the new construction program. Examples of new elements may include but are not limited to:

- Bridge structure type
- Bridge structure major elements such as pier and crossbeam form
- Bridge structure minor elements such as railings and light standards
- Retaining wall materials, configuration and finishes
- Noise wall material, configuration and finishes: as viewed from the corridor
- Noise walls: as viewed from the neighborhoods
- Vista view points
- Median and roadside planting areas
- Color selection
- Opportunities for community funded art in accordance with *Design Manual* Chapter 950

Some design elements are planned to be functionally and visually consistent with features in the Project's adjacent structures. Other elements benefit by retaining flexibility within a consistent palette of materials, colors, and design forms in order to provide the design-build- process flexibility in developing potential solution.

The final design and configuration of these Project features and other functional components will require ongoing communication, review, and coordination between the design-build Contractor's design team and WSDOT's review team.

15.2.7 Architectural Design Standards

The RFP documents will include architectural standards. These will accommodate the functional requirements of the preferred design solution as well as address the contextual conditions of the Project area. They will be sensitive to corridor continuity as well as the scale, character and texture of the area.

The standards will provide a reference for the Project's context sensitive design and pass along the findings of the urban design analysis conducted during the Project's planning and early design phases. The standards describe the Project's urban design features and aide in the creation of an attractive facility that will be functional, maintainable over time, as well as add to the area's visual character.

Depending on the project complexity, the standards may be highly detailed and prescriptive or they may be more general in nature, such as a simple list of criteria.

15.2.8 Methods

The design-builder shall comply with the architectural standards. The design-builder shall also be responsive to the existing urban design documents in the adjacent corridors.

The design-builder shall employ the highest standard of care by implementing national best practices in urban design. The methods shall include, but not limited to, such techniques a Context Sensitive Design (CSS) and Crime Prevention Through Environmental Design (CPTED).

15.2.9 Design-Builder Urban Design Team

Where required in the RFP, the design-builder shall include aesthetic design team member resources. This shall include an experienced urban designer capable of working with other team members and to address final context sensitive design issues, construction details, and special project design features. The urban designer shall be an architect with urban project experience.

The architect shall be licensed in the State of Washington and be responsible for the coordination and development of the project's architectural components. Preference shall be given to a team with an architect experienced in bridge architecture. Preference shall also be given to teams where the architect has a current standing with professional organizations such as the American Institute of Architects (AIA) or the American Institute of City Planners (AICP). The architect shall seal the applicable design documents.

When required by the RFP, and in order to assure consistency with the RFP architectural design standards, the design-builder shall form an Urban Design Team. The team shall consist of, as a minimum, a design builder project urban design manager, a WSDOT Bridge and Structures Office Structures Engineer, the WSDOT State Bridge and Structures Architect and the Region or HQ Principal Landscape Architect.

15.2.10 Analysis and Design Criteria for Structural Widenings and Modifications

The widening of a bridge shall be of a similar superstructure type as the existing. The overall appearance and geometrical dimensions of the widening shall be the same or as close as possible to those of the existing structure. Materials used in the construction of the widening shall have the same thermal and elastic properties as the materials in the original structure. Prestressed concrete girders may be used to widen existing cast-in-place concrete structures.

The members of the widening shall be proportioned to provide similar longitudinal and transverse load distribution characteristics as the existing structure.

Differential settlement between the new and existing structures shall be taken into account.

The design of the widening shall conform to current standards and not the standards used to design and construct the existing structure. The strength of the existing structure shall be checked utilizing current design standards. Existing components shall be strengthened as necessary so that their capacity/demand ratios are not worsened. Seismic design of bridge widenings shall be in accordance with Section 4.3.

Diaphragms for the widening shall coincide with and be parallel to the existing diaphragms.

Falsework for the widening shall be supported from the existing structure if the widening does not require additional girders or substructure. Otherwise, falsework for the widening shall not be supported from the existing structure.

If the widening requires additional girders or substructure, a closure strip shall be provided. All falsework supporting the widening shall be released prior to placing concrete in the closure strip. Formwork supporting the closure strip shall be supported from the existing structure and the widening.

15.2.11 Bridge Security

15.2.11.A General

Where required in the RFP, new bridges shall be designed for security. Bridge abutments in particular shall be designed to deter inappropriate public use and access by illegal urban campers.

The Design-Build Contractor shall coordinate with the project urban design team to identify deterrence strategies. The principles of CPTED (Crime Prevention Through Environmental Design) shall be employed with two strategic options. The first strategy employs natural surveillance and territorial reinforcement. For conditions where the first strategy is not feasible, then a second strategy shall be provided. The second strategy provides hard armoring, such as security fences.

15.2.11.B Natural Surveillance and Territorial Reinforcement

The natural surveillance and territorial reinforcement strategy shall be provided through the following:

1. The distance from the top of abutment wall to the finished grade at the face of abutment shall not be less than 10 feet in height and,
2. Horizontal graded landform shelves at the abutment face beneath superstructures shall be omitted and,
3. Alcove spaces within the abutment-superstructure interface shall be omitted and,
4. Unobstructed views for law enforcement surveillance shall be provided.

15.2.11.C Hard Armoring

The hard armoring strategy shall consist of one of the following or a combination of both:

1. A security fence system with an anti-cut, anti-climb, galvanized steel welded wire mesh fabric. The steel welded wire mesh fabric shall have a minimum wire spacing of ½ inch for horizontal elements and 3 inches vertical elements. The minimum wire diameter shall be 0.162 inch (8 gauge) steel welded wire mesh. The fence system shall have the components shown in Figure 2.8.3-2. The bridge security fence shall not be connection to the bridge superstructure. The security fence may be attached to the bridge abutment, curtain walls, girder seats or retaining walls.
2. Curtain walls may be used in lieu of a security fence system. Cast in place concrete, precast concrete, or concrete masonry unit materials may be constructed as curtain walls provided they meet the project urban design goals. Figure 2.8.3-1 shows a schematic view of the curtain wall option.

15.3 Load Criteria

15.3.1 Scope

LRFD-BDS shall be the minimum design criteria used for all projects. Additional requirements, exceptions, and deviations from LRFD-BDS requirements are contained herein.

15.3.2 Load Factors and Load Combinations

A value of 1.0 shall be used for η_i in Equation 3.4.1-1 of LRFD-BDS except for the design of columns when a minimum value of γ_i is required by Article 3.4.1 of LRFD-BDS. In such a case, η_i shall be 0.95.

Strength IV load combination shall not be used for foundation design. For foundation design, loads shall be factored after distribution through structural analysis or modeling.

The design live load factor for the Service III Limit State load combination shall be as follows:

γ_{LL} = 0.8 when the requirements of Sections 5.6.1 and 5.6.2 are satisfied and stress analysis is based on gross section properties.

γ_{LL} = 1.0 when the requirements of Sections 5.6.1 and 5.6.2 are satisfied and stress analysis is based on transformed section properties.

In special cases that deviate from the requirements of Sections 5.6.1 and 5.6.2 and have been approved by the WSDOT State Bridge Design Engineer, γ_{LL}, shall be as specified in the LRFD-BDS.

The Service III live load factor for load rating shall be 1.0.

The live load factor for Extreme Event-I Limit State shall be 0.5. The base construction temperature shall be taken as 64°F for the determination of Temperature Load.

The Load Factors for Permanent Loads Due to Superimposed Deformations are provided in Table 3.53. Table 3.5-3 replaces Table 3.4.1-3 of LRFD-BDS.

15.3.3 Permanent Loads

The design unit weights of common permanent loads shall be as shown in Table 3.8-1.

15.3.3.A Future Deck Overlay Requirement

All new bridge designs with a concrete driving surface, excluding modified concrete overlays, shall be designed for a 35 psf future wearing surface load. The future wearing surface load does not apply to girder deflection, “A” dimension, creep, or profile grade calculations.

Concrete bridge deck protection systems shall be in accordance with Section 5.7.4 for new bridge construction and widening projects.

15.3.4 Live Loads

15.3.4.A Design Live Load

The design live load shall be:

- For new bridges and bridges that are modified in such a way to include new substructure elements – Live load in accordance with LRFD-BDS
- For bridges modified in such a way that do not include new substructure elements – Live load criteria of the original design
- For bridges used for temporary detour or other temporary purposes – minimum 75 percent of HL-93 live load in accordance with LRFD-BDS
- The application of design vehicular live loads shall be as specified in LRFD-BDS Section 3.6.1.3. The design tandem, or "low boy", defined in LRFD-BDS Section C3.6.1.1 shall be included in the design vehicular live load.
- The effect of one design tandem combined with the effect of the design lane load specified in LRFD-BDS Article 3.6.1.2.4 and, for negative moment between the points of contraflexure under a uniform load on all spans and reactions at interior supports, shall be investigated a dual design tandem spaced from 26.0 feet to 40.0 feet apart, measured between the trailing axle of the lead vehicle and the lead axle of the trailing vehicle, combined with the design lane load. For the purpose of this article, the pairs of the design tandem shall be placed in adjacent spans in such position to produce maximum force effect. Axles of the design tandem that do not contribute to the extreme force effect under consideration shall be neglected.

15.3.4.B Live Load Deflection Evaluation

Article 2.5.2.6.2 of the LRFD-BDS is mandatory in its entirety.

15.3.4.C Distribution to Superstructure

15.3.4.C.1 *Cross sections a, b, c, e, k, and also i and j if sufficiently connected to act as a unit from LRFD-BDS Table 4.6.2.2.1-1*

The live load distribution factor shall be as follows:

- For exterior girder design with slab cantilever length equal or less than 40 percent of the adjacent interior girder spacing, use the live load distribution factor for the adjacent interior girder. The slab cantilever length is defined as the distance from the centerline of the exterior girder to the edge of the slab.
- For exterior girder design with slab cantilever length exceeding 40 percent of the adjacent interior girder spacing, use the lever rule with the multiple presence factor of 1.0 for single lane to determine the live load distribution. The live load used to design the exterior girder shall not be less than the live load used for the adjacent interior girder.
- The rigid cross section analysis for steel beam-slab bridge cross sections described in LRFD-BDS Section C4.6.2.2.2d shall not be used to determine live load distribution unless it can be demonstrated that the effectiveness of diaphragms on the lateral distribution of vehicular live load causes the cross section of the structure to deflect and rotate as a rigid cross section.

15.3.4.C.2 *Cross section Type d from LRFD-BDS Table 4.6.2.2.1-1*

This type of cross section shall be designed as a single unit. The live load force effects shall be that of a single lane of live load multiplied by the product of the live load distribution factor for interior girders computed in accordance with LRFD-BDS and the total number of webs in the cross section. The correction factor for live load distribution for skewed supports as specified in LRFD-BDS Tables 4.6.2.2.2e-1 and 4.6.2.2.3c1 for shear shall apply.

15.3.4.C.3 *Distribution to Substructure*

The number of traffic lanes to be used in the substructure design shall be determined by dividing the entire roadway slab width by 12-feet. No fractional lanes shall be used. Bridge deck widths of less than 24 feet shall have a minimum of two design lanes.

15.3.4.C.4 *Distribution to Crossbeam*

The design and load rating shall be distributed to the substructure by placing wheel line reactions in a lane configuration that generates the maximum force effects in the substructure. Live loads are considered to act directly on the substructure without further distribution through the superstructure as illustrated in Figure 3.9-1.

For steel and prestressed concrete superstructure where the live load is transferred to substructure through bearings, cross frames or diaphragms, the girder reaction may be used for substructure design.

15.3.5 Noise Barrier Walls

Wind on Noise Walls shall be as specified in LRFD-BDS Sections 3.8.1, 3.8.1.2.4, and 15.8.2.

15.4 Seismic Design and Retrofit

15.4.1 General

This chapter and the LRFD-SGS are the foundation seismic design criteria documents used to design highway bridges in Washington State.

This chapter supplements and supersedes the LRFD-BDS by providing WSDOT seismic design criteria, policy and practice.

The importance classifications for all highway bridges in Washington State are classified as "Ordinary" except for special major bridges. Special major bridges fitting the classifications of either "Critical" or "Recovery" will be so designated in the RFP.

Bridges are considered as Critical, Recovery, or Ordinary for their operational classification as described below. Two-level performance criteria are required for design of Recovery and Critical bridges.

- **Critical Bridges**
  Critical bridges are expected to provide immediate access to emergency and similar life-safety facilities after an earthquake. The Critical designation is typically reserved for high-cost projects where WSDOT intends to protect the investment or for projects that would be especially costly to repair if they were damaged during an earthquake.
- **Recovery Bridges**
  Recovery bridges serve as vital links for rebuilding damaged areas and provide access to the public shortly after an earthquake.
- **Ordinary Bridges**
  All bridges not designated as either Critical or Recovery shall be designated as Ordinary.

The expected seismic performance, post-earthquake service levels, and post-earthquake damage states for Critical, Recovery, or Ordinary bridges shall be in accordance with Section 4.1.

15.4.2 WSDOT Additions and Modifications to AASHTO Guide Specifications for LRFD Seismic Bridge Design

WSDOT modifications to the LRFD-SGS are as follows:

15.4.2.A Definitions

LRFD-SGS Article 2

Revise existing definitions and add new definitions as follows:

- **Oversized Pile Shaft**
  A drilled shaft foundation that is larger in diameter than the supported column and has a reinforcing cage larger than and independent of the column's reinforcement cage. The size of the shaft shall be in accordance with Section 7.8.2.
- **Owner**
  Person or agency having jurisdiction over the bridge. For WSDOT projects, regardless of delivery method, the term "Owner" in these Guide Specifications shall be the WSDOT State Bridge Design Engineer and/or the WSDOT State Geotechnical Engineer.

15.4.2.B Earthquake Resisting Systems (ERS) Requirements for Seismic Design Categories (SDCs) C and D

LRFD-SGS Article 3.3

WSDOT Global Seismic Design Strategies:

- **Type 1**
  Ductile Substructure with Essentially Elastic Superstructure. This category is permissible.
- **Type 2**
  Essentially Elastic Substructure with a Ductile Superstructure. This category is not permissible.
- **Type 3**
  Elastic Superstructure and Substructure with a Fusing Mechanism between the two. This category is not permissible.

For Type 1 ERS for SDC C or D, if columns or pier walls are considered an integral part of the energy-dissipating system but remain elastic at the demand displacement, the forces to use for capacity design of other components shall be a minimum of 1.2 times the elastic forces resulting from the demand displacement in lieu of the forces obtained from overstrength plastic hinging analysis. Because maximum limiting inertial forces provided by yielding elements acting at a plastic mechanism level is not effective in the case of elastic design, the following constraints are imposed.

1. Unless an analysis that considers redistribution of internal structure forces due to inelastic action is performed, all substructure units of the frame under consideration and of any adjacent frames that may transfer inertial forces to the frame in question shall remain elastic at the design ground motion demand.
2. Effective member section properties shall be consistent with the force levels expected within the bridge system. Reinforced concrete columns and pier walls shall be analyzed using cracked section properties. For this purpose in absence of better information or estimated by LRFD-SGS Figure 5.6.2-1, a moment of inertia equal to one-half that of the uncracked section shall be used.
3. Foundation modeling shall be established such that uncertainties in modeling will not cause the internal forces of any elements under consideration to increase by more than 10 percent.
4. When site-specific ground response analysis is performed, the response spectrum ordinates shall be selected such that uncertainties will not cause the internal forces of any elements under consideration to increase by more than 10 percent.
5. Thermal, shrinkage, prestress or other forces that may be present in the structure at the time of an earthquake shall be considered to act in a sense that is least favorable to the seismic load combination under investigation.
6. P-Delta effects shall be assessed using the resistance of the frame in question at the deflection caused by the design ground motion.
7. Joint shear effects shall be assessed with a minimum of the calculated elastic internal forces applied to the joint.
8. Detailing as normally required in either SDC C or D, as appropriate, shall be provided.

Use of expected material strengths for the determination of member strengths except shear for elastic response of members is permitted.

The use of elastic design in lieu of overstrength plastic hinging forces for capacity protection described above shall only be considered if designer demonstrates that capacity design of Article 4.11 of the AASHTO *Guide Specifications for LRFD-SGS* is not feasible due to geotechnical or structural reasons.

If the columns or pier walls remain elastic at the demand displacement, shear design of columns or pier walls shall be based on 1.2 times elastic shear force resulting from the demand displacement and normal material strength shall be used for capacities. The minimum detailing according to the bridge seismic design category shall be provided.

Type 3 ERS may be considered only if Type 1 strategy is not suitable and Type 3 strategy has been deemed necessary for accommodating seismic loads. Isolation bearings shall be designed in accordance with the AASHTO *Guide Specifications for Seismic Isolation*. Isolation bearings shall conform to Section 9.3.

Limitations on the use of ERS and ERE are shown in BDM Figures 4.2.2-1, 4.2.2-2, 4.2.2-3, and 4.2.3-4.

- Figure 4.2.2-2 Type 6, connection with moment reducing detail should only be used at column base if proved necessary for foundation design. A fixed connection at base of column remains the preferred option for WSDOT bridges.
- The design criteria for column base with moment reducing detail shall consider all applicable loads at service, strength, and extreme event limit states.
- 4.2.2-3 Types 6 and 8 are not permissible for non-liquefied configuration and permissible for liquefied configuration.

15.4.2.C Seismic Ground Shaking Hazard

LRFD-SGS Article 3.4

For bridges that are considered Critical or Recovery or Ordinary bridges with a site Class F, the seismic ground shaking hazard shall be determined in accordance with the site specific procedure in Article 3.4.3 of the LRFD-SGS.

In cases where the site coefficients used to adjust mapped values of design ground motion for local conditions are inappropriate to determine the design spectra in accordance with general procedure of Article 3.4.1 (such as the period at the end of constant design spectral acceleration plateau (T_s) is greater than 1.0 second or the period at the beginning of constant design spectral acceleration plateau (T_o) is less than 0.2 second), a site-specific ground motion response analysis shall be performed.

The spectral response parameters shall be determined using USGS 2014 *Seismic Hazard Maps and Site Coefficients* defined in Section 4.2.3.

15.4.2.D Selection of Seismic Design Category (SDC)

LRFD-SGS Article 3.5

A pushover analysis shall be used to determine displacement capacity for both SDCs C and D.

15.4.2.E Temporary and Staged Construction

LRFD-SGS Article 3.6

For bridges that are designed for a reduced seismic demand, the contract plans shall either include a statement that clearly indicates that the bridge was designed as temporary using a reduced seismic demand or show the Acceleration Response Spectrum (ARS) used for design. No liquefaction assessment required for temporary bridges.

15.4.2.F Load and Resistance Factors

LRFD-SGS Article 3.7

Use load factors of 1.0 for all permanent loads. The load factor for live load shall be 0.0 when pushover analysis is used to determine the displacement capacity. Use a live load factor of 0.5 for all other extreme event cases. Unless otherwise noted, all ϕ factors shall be taken as 1.0.

15.4.2.G Balanced Stiffness Requirements and Balanced Frame Geometry Recommendation

LRFD-SGS Articles 4.1.2 and 4.1.3

Balanced stiffness between bents within a frame and between columns within a bent and balanced frame geometry for adjacent frames are required for bridges in both SDCs C and D.

15.4.2.H Selection of Analysis Procedure to Determine Seismic Demand

LRFD-SGS Article 4.2

Minimum requirements for the selection of the analysis procedure to determine seismic demand shall be as specified in Tables 4.2-1 and 4.2-2 of the Guide Specifications, except Procedure 1 (Equivalent Static Analysis) shall not be used for WSDOT Bridges.

15.4.2.I Member Ductility Requirement for SDCs C and D

LRFD-SGS Article 4.9

In-ground hinging for drilled shaft and pile foundations may be considered for the liquefied configuration if allowed by the RFP Criteria.

15.4.2.J Longitudinal Restrainers

LRFD-SGS Article 4.13.1

Longitudinal restrainers shall be provided at the expansion joints between superstructure segments. Restrainers shall be designed in accordance with the FHWA *Seismic Retrofitting Manual for Highway Structure* (FHWAHRT06032), Article 8.4, the Iterative Method. Restrainers shall be detailed in accordance with the requirements of Guide Specifications Article 4.13.3 and *Bridge Design Manual* Section 4.4.4. Restrainers may be omitted for SDCs C and D where the available seat width exceeds the calculated support length specified in Equation C4.13.1-1.

Longitudinal restrainers shall not be used at the end piers (abutments).

15.4.2.K Abutments

LRFD-SGS Article 5.2

Abutments are revised as follows:

15.4.2.K.1 *4.2.11.1 - General*

The participation of abutment walls in providing resistance to seismically induced inertial loads may be considered in the seismic design of bridges either to reduce column sizes or reduce the ductility demand on the columns. Damage to backwalls and wingwalls during earthquakes may be considered acceptable when considering no collapse criteria, provided that unseating or other damage to the superstructure does not occur. Abutment participation in the overall dynamic response of the bridge system shall reflect the structural configuration, the load transfer mechanism from the bridge to the abutment system, the effective stiffness and force capacity of the wall-soil system, and the level of acceptable abutment damage. The capacity of the abutments to resist the bridge inertial loads shall be compatible with the soil resistance that can be reliably mobilized, the structural design of the abutment wall, and whether the wall is permitted to be damaged by the design earthquake. The lateral load capacity of walls shall be evaluated on the basis of a rational passive earth-pressure theory.

The participation of the bridge approach slab in the overall dynamic response of bridge systems to earthquake loading and in providing resistance to seismically induced inertial loads may be considered if allowed by the RFP Criteria.

15.4.2.K.2 *4.2.11.2 - Longitudinal Direction*

The abutment may be considered as part of the ERS for a continuous superstructure. If the abutment is considered as part of the longitudinal ERS, the abutment stiffness and capacity shall be determined as illustrated schematically in Figure 4.2.11-1a for semi-integral abutments, Figure 4.2.11-1b for L-shaped abutments with backwall fuse, and Figure 4.2.11-1c for L-shaped abutments without backwall fuse.

Figure 4.2.11-1 Abutment Stiffness and Passive Pressure Estimate

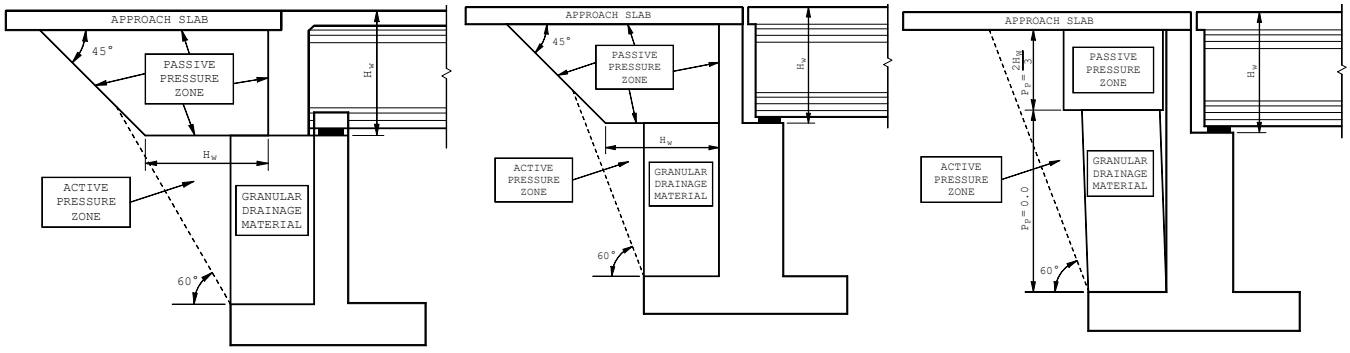

(a) Semi-integral Abutment

(b) L-shape Abutment Backwall Fuses

(c) L-shape Abutment Backwall Does Not Fuse

Abutments shall be designed to sustain the design earthquake displacements. The passive abutment resistance shall be limited to 70 percent of the value obtained using the procedure given in Article 4.2.11.2.1.

15.4.2.K.3 *4.2.11.2.1 - Abutment Stiffness and Passive Pressure Estimate*

Abutment stiffness, K_{eff} in kip/feet, and passive capacity, P_p in kips, shall be characterized by a bilinear or other higher order nonlinear relationship as shown in Figure 4.2.11-2. When the motion of the back wall is primarily translation, passive pressures may be assumed uniformly distributed over the height (H_w) of the backwall or end diaphragm. The total passive force shall be determined as:

$$P_p = p_p H_w W_w \qquad (4.2.11.2.1\text{-}1)$$

Where:

p_p = passive lateral earth pressure behind backwall or diaphragm (ksf)
H_w = height of back wall or end diaphragm exposed to passive earth pressure (feet)
W_w = width of back wall or diaphragm (feet)

Figure 4.2.11-2 Characterization of Abutment Capacity and Stiffness

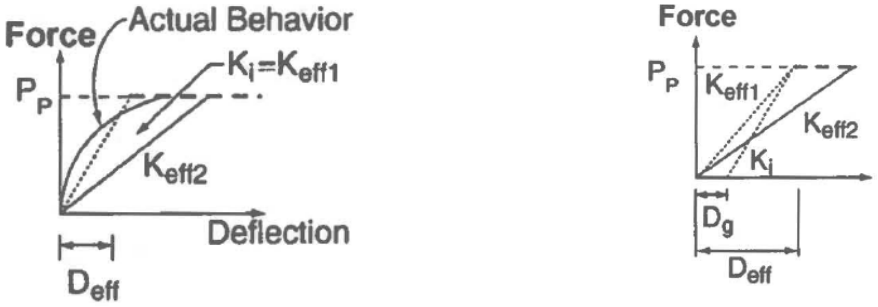

(a) Semi-integral Abutment (b) L-shape Abutment

15.4.2.K.4 *4.2.11.2.2 - Calculation of Best Estimate Passive Pressure Pp*

If the strength characteristics of compacted or natural soils in the "passive pressure zone" are known, then the passive force for a given height, H_w, shall be calculated using accepted analysis procedures. These procedures should account for the interface friction between the wall and the soil. The properties used shall be those indicative of the entire "passive pressure zone" as indicated in Figure 1. Therefore, the properties of backfill present immediately adjacent to the wall in the active pressure zone may not be appropriate as a weaker failure surface can develop elsewhere in the embankment.

For L-shape abutments where the backwall is not designed to fuse, H_w shall conservatively be taken as the depth of the superstructure, unless a more rational soil-structure interaction analysis is performed.

If presumptive passive pressures are to be used for design, then the following criteria shall apply:

- Soil in the "passive pressure zone" shall be compacted in accordance with *Standard Specifications* Section 2-03.3(14)I.
- For cohesionless, nonplastic backfill (fines content less than 30 percent), the passive pressure p_p shall be assumed equal to $2H_w/3$ ksf per foot of wall length.
- For other cases, including abutments constructed in cuts, the passive pressures shall be developed by a Geotechnical Engineer.

15.4.2.K.5 *4.2.11.2.3 - Calculation of Passive Soil Stiffness*

Equivalent linear secant stiffness, K_{eff} in kip/feet, is required for analyses. For semi-integral or L-shape abutments initial secant stiffness may be determined as follows:

$$K_{eff1} = \frac{P_p}{(F_w H_w)} \quad (4.2.11.2.3\text{-}1)$$

Where:

P_p = passive lateral earth pressure capacity (kip)
H_w = height of back wall (feet)
F_w = the value of F_w to use for a particular bridge is found in Table C3.11.1-1 of the LRFD-BDS.

For L-shape abutments, the expansion gap shall be included in the initial estimate of the secant stiffness as specified in:

$$K_{eff1} = \frac{P_p}{(F_w H_w + D_g)} \quad (4.2.11.2.3\text{-}2)$$

Where:

D_g = width of gap between backwall and superstructure (feet)

For SDCs C and D, where pushover analyses are conducted, values of P_p and the initial estimate of K_{eff1} should be used to define a bilinear load-displacement behavior of the abutment for the capacity assessment.

15.4.2.K.6 *4.2.11.3 - Transverse Direction*

Transverse stiffness of abutments may be considered in the overall dynamic response of bridge systems if allowed by RFP Criteria. The transverse abutment stiffness used in the elastic demand models shall be taken as 50-percent of the elastic transverse stiffness of the adjacent bent.

Girder stops are expected to fuse at the design event earthquake level of acceleration to limit the demand and control the damage in the abutments and supporting piles/shafts. The forces generated with elastic demand assessment models shall not be used to size the abutment girder stops. Girder stops for abutments supported on a spread footing shall be designed to sustain the lesser of the acceleration coefficient, A_s, times the superstructure dead load reaction at the abutment plus the weight of abutment and its footing or sliding friction forces of spread footings. Girder stops for pile/shaft-supported foundations shall be designed to sustain the sum of 75 percent total lateral capacity of the piles/shafts and shear capacity of one wingwall.

The stiffness of fusing or breakaway abutment elements such as wingwalls (yielding or non-yielding), elastomeric bearings, and sliding footings shall not be relied upon to reduce displacement demands at intermediate piers.

Unless fixed bearings are used, girder stops shall be provided between all girders regardless of the elastic seismic demand. The design of girder stops shall accommodate unequal forces that may develop in each stop.

When fusing girder stops, transverse shear keys, or other elements that potentially release the restraint of the superstructure are used, then adequate support length meeting the requirements of Article 4.12 of the LRFD-SGS shall be provided in the transverse direction as well as the longitudinal direction. Additionally, the expected redistribution of internal forces in the superstructure and other bridge system element shall be considered. Bounding analyses considering incremental release of transverse restraint at each end of the bridge shall also be considered.

15.4.2.K.7 *4.2.11.4 - Curved and Skewed Bridges*

The passive pressure resistance in soils behind semi-integral or L-shape abutments shall be based on the projected width of the abutment wall normal to the centerline of the bridge. Abutment springs shall be included in the local coordinate system of the abutment wall.

15.4.2.L Foundation – General

LRFD-SGS Article 5.3.1

The required Foundation Modeling Method (FMM) and the requirements for estimation of foundation springs for spread footings, pile foundations, and drilled shafts shall be Modeling Method II as defined in Table 5.3.1-1.

15.4.2.M Foundation – Spread Footing

LRFD-SGS Article C5.3.2

Foundation springs for spread footings shall be determined in accordance with Section 7.2.7 and *Geotechnical Design Manual* Section 6.5.1.1.

15.4.2.N Procedure 3: Nonlinear Time History Method

LRFD-SGS Article 5.4.4

The time histories of acceleration used to describe the earthquake loads shall be selected in accordance with *Geotechnical Design Manual* Section 6-A.6.

15.4.2.O I_{eff} for Box Girder Superstructure

LRFD-SGS Article 5.6.3

The gross moment of inertia shall be used for box girder superstructure modeling.

15.4.2.P Foundation Rocking

LRFD-SGS Article 6.3.9

Foundation rocking shall not be used for the design of WSDOT bridges.

15.4.2.Q Drilled Shafts

LRFD-SGS Article C6.5

For WSDOT bridges, the scale factor for p-y curves or subgrade modulus for large diameter shafts shall not be used.

15.4.2.R Longitudinal Direction Requirements

LRFD-SGS Article 6.7.1

Case 2: Earthquake Resisting System (ERS) with abutment contribution may be used provided that the mobilized longitudinal passive pressure is not greater than 70 percent of the value obtained using the procedure given in Article 5.2.2.1.

15.4.2.S Liquefaction Design Requirements

LRFD-SGS Article 6.8

Soil liquefaction assessment shall be based on *Geotechnical Design Manual* Section 6.4.2.8.

15.4.2.T Reinforcing Steel

Longitudinal reinforcement for ductile members in SCD's B, C & D, including foundations where in-ground-hinging is considered as part of the ERS, shall conform to ASTM A706 Grade 60. See Section 5.1.2 for other requirements.

For SDCs B, C, and D, the moment-curvature analyses based on strain compatibility and nonlinear stress strain relations shall be used to determine the plastic moment capacities of all ductile concrete members. The properties of reinforcing steel, as specified in Table 8-4.2-1, shall be used.

Deformed welded wire fabric shall not be used.

15.4.2.U Concrete Modeling

LRFD-SGS Article 8.4.4

Where in-ground plastic hinging is part of the ERS, the confined concrete core shall be limited to a maximum compressive strain of 0.008 and the member ductility demand shall be limited to 4 maximum.

15.4.2.V Expected Nominal Moment Capacity

LRFD-SGS Article 8.5

Replace the definition of λ_{mo} with the following:

λ_{mo} = overstrength factor

= 1.2 for ASTM A 706 Grade 60 reinforcement

=1.4 for ASTM A 615 Grade 60 reinforcement

15.4.2.W Interlocking Bar Size

LRFD-SGS Article 8.6.7

The longitudinal reinforcing bar inside the interlocking portion of a column (interlocking bars) shall be the same size of bars used outside the interlocking portion.

15.4.2.X Splicing of Longitudinal Reinforcement in Columns Subject to Ductility Demands for SDCs C and D

LRFD-SGS Article 8.8.3

The splicing of longitudinal column reinforcement outside the plastic hinging region shall be accomplished using mechanical couplers that are capable of developing the tensile strength of the spliced bar. Splices shall be staggered at least 2 feet. Lap splices shall not be used. The design engineer shall clearly identify the locations where splices in longitudinal column reinforcement are permitted on the plans. In general where the length of the rebar cage is less than 60 feet (72 feet for No. 14 and No. 18 bars), no splice in the longitudinal reinforcement shall be allowed.

15.4.2.Y Development Length for Column Bars Extended into Oversized Pile Shafts for SDCs C and D

LRFD-SGS Article 8.8.10

Extending column bars into oversized shaft shall be in accordance with Section 7.4.4.C, based on TRAC Report WARD 417.1 "*Non-Contact Lap Splice in Bridge Column Shaft Connections*".

15.4.2.Z Lateral Confinement for Oversized Pile Shaft for SDCs C and D

LRFD-SGS Article 8.8.12

The requirement of this article for shaft lateral reinforcement in the column-shaft splice zone may be replaced with the requirements of Section 7.8.2.K.

15.4.2.AA Lateral Confinement for Non-Oversized Strengthened Pile Shaft for SDCs C and D

LRFD-SGS Article 8.8.13

Non-oversized column-shaft (the cross section of the confined core is the same for both the column and the pile shaft) is not permissible unless allowed by the RFP Criteria.

15.4.2.AB Requirements for Capacity Protected Members

LRFD-SGS Article 8.9

For SDCs C and D where liquefaction is identified, pile and drilled shaft inground hinging may be considered as an ERE.

Bridges shall be analyzed and designed for the non-liquefied condition and the liquefied condition in accordance with Article 6.8. The capacity protected members shall be designed in accordance with the requirements of Article 4.11. To ensure the formation of plastic hinges in columns, oversized pile shafts shall be designed for an expected nominal moment capacity, M_{ne}, at any location along the shaft, that is, equal to 1.25 times moment demand generated by the overstrength column plastic hinge moment and associated shear force at the base of the column. The safety factor of 1.25 may be reduced to 1.0 depending on the soil properties.

The design moments below ground for extended pile shaft may be determined using the nonlinear static procedure (pushover analysis) by pushing them laterally to the displacement demand obtained from an elastic response spectrum analysis. The point of maximum moment shall be identified based on the moment diagram. The expected plastic hinge zone shall extend 3D above and below the point of maximum moment. The plastic hinge zone shall be designated as a "no splice" zone and the transverse steel for shear and confinement shall be provided accordingly.

15.4.2.AC Superstructure Capacity Design for Transverse Direction (Integral Bent Cap) for SDCs C and D

LRFD-SGS Article 8.11

For SDCs C and D, the longitudinal flexural bent cap beam reinforcement shall be continuous. Splicing of cap beam longitudinal flexural reinforcement shall be accomplished using mechanical couplers that are capable of developing the tensile strength of the spliced bar. Splices shall be staggered at least 2 feet. Lap splices shall not be used.

15.4.2.AD Superstructure Design for Non Integral Bent Caps for SDCs B, C, and D

LRFD-SGS Article 8.12

Non integral bent caps shall not be used for continuous concrete bridges in SDC B, C, and D except at the expansion joints between superstructure segments.

15.4.2.AE Integral Bent Cap Joint Shear Design

LRFD-SGS Article 8.13.4.1.1

In addition to the T-joints listed in Article 8.13.4.1.1, the exterior column joints for box girder superstructure and other superstructures if the cap beam extends the joint far enough to develop the longitudinal cap reinforcement shall be considered T-joints for joint shear analysis in the transverse direction.

15.4.2.AF Cast-in-Place and Precast Concrete Piles

LRFD-SGS Article 8.16.2

Minimum longitudinal reinforcement of 0.75 percent of A_g shall be provided for CIP piles in SDCs B, C, and D. Longitudinal reinforcement shall be provided for the full length of pile.

15.4.2.AG Seismic Resiliency using Innovative Materials and Construction

Innovative materials and bridge construction are ideas that encourage engineers to consider principles that will enhance bridge performance, speed up construction, or add any other benefit to the industry. BDM Section 14.4 describes the self-centering columns that are designed restore much of their original shape after a seismic event. They're intended to improve the serviceability of a bridge after an earthquake. Self-centering columns are constructed with a precast concrete column segment with a duct running through it longitudinally. They rest on footings with post-tensioning (PT) strand developed into them. Once the precast column piece is set on the footing, the PT strand threads through the duct and gets anchored into the crossbeam above the column. The PT strand is unbonded to the column segment. As a column experiences a lateral load, the PT strand elastically stretches to absorb the seismic energy and returns to its original tension load

after the seismic event. The expectation is the column would rotate as a rigid body and the PT strand would almost spring the column back to its original orientation. Like self-centering columns, Shape Memory Alloy (SMA) and Engineered Cementitious Composite (ECC) products are introduced into bridge design as a means to improve ductility, seismic resilience, and serviceability of a bridge after an earthquake. SMA is a class of alloys that are manufactured from either a combination of nickel and titanium or copper, magnesium and aluminum. The alloy is shaped into round bars in sizes similar to conventional steel reinforcement. When stressed, the SMA can undergo large deformations and return to original shape.

15.4.3 Seismic Design Requirements for Bridge Modifications and Widening Projects

15.4.3.A Seismic Analysis and Retrofit Policy

The Seismic Analysis and Retrofit Policy for Bridge Modifications and Widening Projects shall conform to Sections 4.3.1, 4.3.2, 4.3.3, and 4.3.4.

Specific seismic requirements for widening of Recovery and Critical bridges are provided in FRP Section 2.13 and Section 4.3.3.

The spectral response parameters shall be determined using USGS 2014 Seismic Hazard Maps and Site Coefficients defined in Section 4.2.3.

15.4.3.B Design and Detailing Considerations

15.4.3.B.1 *Support Length*

The support length at existing abutments, piers, inspan hinges, and pavement seats shall be checked. If there is a need for longitudinal restrainers, transverse restrainers, or additional support length on the existing structure, they shall be included in the widening design.

15.4.3.B.2 *Connections Between Existing and New Elements*

Connections between the existing elements and new elements shall be designed for maximum overstrength forces. Where yielding is expected in the crossbeam connection at the extreme event limit state, the new structure shall be designed to carry live loads independently at the Strength I limit state. In cases where large differential settlement and/or a liquefaction induced loss of bearing strength are expected, the connections may be designed to deflect or hinge in order to isolate the two parts of the structure. Elements subject to inelastic behavior shall be designed and detailed to sustain the expected deformations.

Longitudinal joints that isolate the decks between the existing and new structures are not permitted.

15.4.3.B.3 *Differential Settlement*

The designer shall evaluate the potential for differential settlement between the existing structure and widening structure. Additional geotechnical measures may be required to limit differential settlements to tolerable levels for both static and seismic conditions. The bridge designer shall evaluate, design, and detail all elements of new and existing portions of the widened structure for the differential settlement warranted by the Geotechnical Engineer. Angular distortions between adjacent foundations shall not exceed 0.008 (RAD) in simple spans and 0.004 (RAD) in continuous spans.

The horizontal displacement of pile and shaft foundations shall be estimated using procedures that consider soil structure interaction (see *Geotechnical Design Manual* Section 8.12.2.3). Horizontal movement criteria shall be established at the top of the foundation based on the tolerance of the structure to lateral movement with consideration of the column length and stiffness. Tolerance of the superstructure to lateral movement will depend on bridge seat widths, bearing type(s), structure type, and load distribution effects.

15.4.3.B.4 *Foundation Types*

The foundation type of the new structure should match that of the existing structure. However, a different type of foundation may be used for the new structure due to geotechnical recommendations or the limited space available between existing and new structures. For example, a shaft foundation may be used in lieu of spread footing.

15.4.3.B.5 *Existing Strutted Columns*

The horizontal strut between existing columns may be removed. The existing columns shall then be analyzed with the new unbraced lengths and retrofitted if necessary.

15.4.3.B.6 *Non Structural Element Stiffness*

Median barriers and other potentially stiffening elements shall be isolated from the columns to allow column deformation.

Deformation capacities of existing bridge members that do not meet current detailing standards shall be determined using the provisions of Section 7.8 of the *Retrofitting Manual for Highway Structures: Part 1 – Bridges*, FHWAHRT06032. Deformation capacities of existing bridge members that meet current detailing standards shall be determined using the latest edition of the LRFD-SGS.

In lieu of specific data, the reinforcement properties provided in Table 4.3.5-1 shall be used.

15.4.3.B.7 *Isolation Bearings*

Isolation bearings may be used for bridge widening projects to reduce the seismic demand through modification of the dynamic properties of the bridge. Isolation bearings shall be designed in accordance with AASHTO *Guide Specifications for Seismic Isolation* and shall conform to Section 9.3.

15.4.4 Seismic Retrofitting of Existing Bridges

Seismic retrofitting of existing bridges shall be performed in accordance with the FHWA publication FHWA HRT 06032, *Seismic Retrofitting Manual for Highway Structures: Part 1 – Bridges* as follows:

- Article 1.5.3 The spectral response parameters shall be determined using USGS 2014 Seismic Hazard Maps and Site Coefficients defined in Section 4.2.3.
- Article 7.4.2 Seismic Loading in Two or Three Orthogonal

  Revise the first paragraph as follows:

  When combining the response of two or three orthogonal directions the design value of any quantity of interest (displacement, bending moment, shear or axial force) shall be obtained by the 100-30 percent combination rule as described in LRFD-SGS Article 4.4.

- Delete Eq. 7.44 and replace with the following:

$$Lp = \text{the maximum of } [(8800\varepsilon ydb) \text{ or } (0.08L + 4400\varepsilon ydb)] \quad (7\text{-}44)$$

- Delete Eq. 7.49 and replace with the following:

$$\phi_p = \left(5\left(\frac{V_i - V_m}{V_i - V_f}\right) + 2\right)\phi_y$$

- Delete Eq. 7.51 and replace with the following:

$$\phi_p = \left(4\left(\frac{V_{ji} - V_{jh}}{V_{ji} - V_{jf}}\right) + 2\right)\phi_y$$

15.4.4.A Seismic Analysis Requirements

The multi-mode spectral analysis of *Seismic Retrofitting Manual* Section 5.4.2.2 (as a minimum) shall be used to determine the seismic displacement and force demands to identify seismically deficient elements of the existing structure. Prescriptive requirements, such as support length, shall be considered mandatory and shall be included in the analysis. Seismic capacities shall be determined in accordance with the requirements of the *Seismic Retrofitting Manual*. Displacement capacities shall be determined by the Method D2 – Structure Capacity/Demand (Pushover) Method of *Seismic Retrofitting Manual* Section 5.6.

The seismic retrofit of Ordinary, Recovery and Critical bridges shall be in accordance with the requirements of the Seismic Retrofitting Manual, and WSDOT BDM Section 4.4. Specific requirements for the seismic retrofit of Recovery and Critical bridges are provided in RFP Section 2.13.

15.4.4.B Seismic Retrofit Design

Table 111, Chapters 8, 9, 10, 11, and Appendices D thru F of the *Seismic Retrofitting Manual* shall be used in selecting and designing the seismic retrofit measures.

15.4.4.C Earthquake Restrainers

Longitudinal restrainers shall be high strength steel rods conform to ASTM F 1554 Grade 105, including Supplement Requirements S2, S3 and S5. Nuts, and couplers if required, shall conform to ASTM A 563 Grade DH. Washers shall conform to AASHTO M 293. High strength steel rods and associated couplers, nuts and washers shall be galvanized after fabrication in accordance with AASHTO M 232. The length of longitudinal restrainers shall be less than 24 feet.

15.4.4.D Isolation Bearings

Isolation bearings may be used for seismic retrofit projects to reduce the demands through modification of the dynamic properties of the bridge as a viable alternative to strengthening weak elements of non-ductile bridge substructure members of existing bridge. Isolation bearings shall be designed in accordance with the requirement of the AASHTO *Guide Specifications for Seismic Isolation* and shall conform to Section 9.3.

15.5 Concrete Structures

15.5.1 General

Design of concrete structures for roadway elements such as bridges, lids, retaining walls, noise walls, three-sided structures, traffic barrier, pedestrian barrier, sign structures, and bridge approach slabs, etc., shall be based on the requirements cited herein and in the current LRFD-BDS, LRFD-SGS, WSDOT Special Provisions and the WSDOT *Standard Specifications*.

15.5.2 Materials

15.5.2.A Concrete

15.5.2.A.1 *Cast-in-place (CIP) Concrete*

Cast-in-place (CIP) concrete shall meet the requirements of Table 15.5.2-1:

Table 15.5.2-1

Component or Application	Minimum Numerical Class and Minimum Compressive Strength at 28 days (psi)	Letter Suffix	Compressive Strength for use in Design = f'c (psi)
Commercial Concrete; Non-structural Concrete; Sidewalks; Curbs; Gutters	3000	-	Numerical Class
General Structural Concrete including Spread Footings; Walls; Columns; Crossbeams; Box Girders; Slabs; Barriers; etc.	4000	-	Numerical Class
Bridge Approach Slabs	4000	A	Numerical Class
Bridge Decks	4000	D	Numerical Class
Piles and Shafts	4000/5000	P	Numerical Class
Underwater Seals	4000	W	0.6 times Numerical Class

15.5.2.A.2 *Modulus of Elasticity*

For calculation of the modulus of elasticity, the unit weight of plain concrete (w_c) shall be taken as 0.155 kcf for prestressed concrete girders and 0.150 kcf for normal-weight concrete unless project specific data is available. The correction factor (K_1) shall be taken as 1.0 unless project specific data is available.

15.5.2.A.3 *Shrinkage and Creep*

Shrinkage and creep shall be calculated with relative humidity (H) taken as 75 percent unless project specific data is available. The maturity of concrete (t) shall be taken as 2000 days. In determining the age of concrete at time of load application (t_i) one day of accelerated curing by steam or radiant heat shall be taken as equal to seven days of normal curing.

15.5.2.A.4 *Grout*

Grout pads with thickness exceeding 4″ shall be reinforced with steel reinforcement. Non-shrink grout conforming to *Standard Specifications* Section 9-20.3(2) shall be used in keyways between prestressed concrete girders.

15.5.2.A.5 *Mass Concrete*

Concrete placements with a least dimension of greater than 6-feet shall be considered mass concrete, except that shafts need not be considered mass concrete.

The temperature of mass concrete during placement and curing shall not exceed 160°F. The temperature difference between the geometric center of the mass concrete and the center of nearby exterior surfaces during placement and curing shall not exceed 35°F.

A thermal control plan shall be submitted by the Design-Builder for review and comment for mass concrete placements. The thermal control plan may include such things as: a thermal analysis; temperature monitors and equipment; insulation; concrete cooling before placement; concrete cooling after placement, such as by means of internal cooling pipes; use of smaller, less frequent placements; or other methods proposed by the Design-Builder and accepted by the WSDOT Bridge Technical Advisor (BTA).

Concrete mix designs may be optimized (such as by using low-heat cement, fly ash or slag cement, low-water/cement ratio, low cementitious materials content, larger aggregate, etc.) as long as the concrete mix meets other project requirements.

15.5.2.A.6 *Shotcrete*

Shotcrete shall not be used for permanent structures, including exterior wall fascia surfaces, unless allowed by RFP Criteria. Shotcrete may be used for temporary applications.

15.5.2.A.7 *Lightweight Aggregate Concrete*

Lightweight aggregate concrete shall not be used on bridge decks or other components exposed to traffic wheel loads in service. The absorption of the lightweight coarse aggregate for prestressed elements shall not exceed 10 percent when tested in accordance with AASHTO T85.

15.5.2.B Reinforcing Steel

15.5.2.B.1 *Grades*

Steel reinforcing bars shall conform to Section 5.1.2 and Section 15.4.2.T.

15.5.2.B.2 *Compressive Development Length*

The minimum compressive development length shall be 1′-0″.

15.5.2.B.3 *Splices*

Minimum lap splice lengths, for both tension and compression, shall be 2′-0″. When two bars of different diameters are lap spliced, the length of the lap splice shall be the larger of the lap splice for the smaller bar or the development length for the larger bar.

15.5.2.B.4 *Welded Wire Reinforcement in Prestressed Concrete Girders, Walls, Barriers and Deck Panels*

Welded wire reinforcement may be used to replace steel reinforcing bars in prestressed concrete girders, walls, barriers, and deck panels.

Welded wire reinforcement shall be deformed.

Longitudinal wires and welds shall be excluded from regions with high shear demands, including girder webs. Longitudinal wires for anchorage of welded wire reinforcement shall have an area of 40 percent or more of the area of the wire being anchored as described in ASTM A497 but shall not be less than D4.

15.5.2.B.5 *Reinforcing Bar Dowels and Resin Bonded Anchors*

Allowable tensile loads and minimum required embedment for reinforcing bar dowels shall be in accordance with Section 5.5.4.A.4. If it is not possible to obtain this embedment, the allowable load on the dowel shall be reduced by the ratio of the actual embedment divided by the required embedment.

Before core drilling, existing reinforcement shall be located by non-destructive methods or by chipping if existing reinforcement cannot be damaged. Core drilled holes shall be roughened.

15.5.2.C Prestressing Steel

Prestressing steel shall be AASHTO M 203 Grade 270 low relaxation for strands and AASHTO M 275 Type II for bars.

The refined estimate for computing time-dependent losses shall be used.

Partial prestressing is not permitted.

15.5.2.D Post-Tensioning Systems

Multistrand grouted tendons with steel strand systems shall be used for post-tensioned concrete bridge superstructures, spliced girders, and bridge components. For post-tensioned concrete bridge decks, unbonded single strand post tensioning systems may be used.

Multistrand and grouted post-tensioning systems for permanent construction shall be designed and constructed in accordance with Protection Level 2 (PL-2) practices, as defined by the requirements of PTI/ASBI M50.3-19 *Specification for Multistrand and Grouted Post-Tensioning* and PTI M55.1-19 *Specification for Grouting of Post-Tensioned Structures*. Unbonded single strand post-tensioning systems shall be designed and constructed in accordance with PTI M10.2-17 *Specification for Unbonded Single Strand Tendons*.

15.5.3 Design Considerations

15.5.3.A Service and Fatigue Limit States

The exposure factor for LRFD-BDS Section 5.6.7 "Control of Cracking by Distribution of Reinforcement" shall be based upon a Class 2 exposure condition.

Concrete stresses in prestressed members shall be limited to the allowable stresses shown in Table 5.2.1-1.

15.5.3.B Strength Limit State

The shear design of prestressed members shall be based on the general procedure of LRFD-BDS Section 5.7.3.4.2. The shear design of non-prestressed members shall be based on either the general procedure, or the simplified procedure of LRFD-BDS Section 5.7.3.4.1. LRFD-BDS Section 5.8.3.4.3 "Simplified Procedure for Prestressed and Non-prestressed Sections" shall not be used.

The maximum spacing of shear and torsion reinforcement shall be 18 inches.

15.5.3.C Post-Tensioning

Dead end anchorages shall be avoided.

A 2″ minimum clearance shall be provided between post-tensioning ducts.

Confinement reinforcement shall be provided to confine curved post-tensioning tendons in accordance with Section 5.8.1.F.

Structure shortening effects due to post-tensioning shall be included in the design.

The camber shall be shown on the plans and shall include the effect of both dead load and final prestressing.

All post-tensioning anchorages in webs of box girder or multi-stem superstructure should be vertically aligned. Tendons adjacent to post-tensioning anchorages shall meet the minimum tangent length and minimum tendon radii requirements of Section 5.8.1.D.

15.5.4 Superstructures

15.5.4.A Reinforced Concrete Superstructures

The use of CIP reinforced concrete bridge superstructures without post-tensioning shall be restricted to widening existing reinforced concrete bridge superstructures. Longitudinal post-tensioning shall be provided for all new CIP reinforced concrete bridge superstructures.

15.5.4.B Box Girder Superstructures

15.5.4.B.1 *Intermediate Diaphragms for Curved Concrete Box Girder Bridges*

Intermediate diaphragms shall be provided for curved concrete box girder bridges with centerline radius, R, less than 800 feet. Minimum diaphragm spacing shall be as follows:

For 600 feet ≤ R < 800 feet - at midspan.

For 400 feet ≤ R < 600 feet - at ⅓ points of span.

For R < 400 feet - at ¼ points of span.

15.5.4.B.2 *Temperature Effects*

Thermal stresses shall be investigated in design using the following criteria:

1. A mean temperature 50°F with rise 45°F and fall 45°F for longitudinal analysis using one-half of the modulus of elasticity (Maximum Seasonal Variation.)
2. The superstructure box girder shall be designed transversely for a temperature differential between inside and outside surfaces of ±15°F with no reduction in modulus of elasticity (Maximum Daily Variation).
3. The superstructure box girder shall be designed longitudinally for a top slab temperature increase of 20°F with no reduction in modulus of elasticity.

15.5.4.B.3 *Drains*

Drains shall be placed in the bottom slab at the low points of each cell. Drain hole details shall be in accordance with Figure 5.3.8-1.

15.5.4.C Prestressed Concrete Girder Superstructures

15.5.4.C.1 *WSDOT Standard Girder Types and Construction Sequences*

Prestressed concrete girders shall be a WSDOT standard girder type in accordance with Bridge Standard Drawing 5.6-A1-10 through 5.6-A1-13.

Prestressed concrete girder superstructures shall follow a construction sequence in accordance with Bridge Standard Drawing 5.6-A2-1 through 5.6-A2-3.

15.5.4.C.2 *Superstructure Continuity*

Prestressed concrete girder superstructures shall be designed for the envelope of simple span and continuous span loadings for all permanent and transient loads. Loads applied before establishing continuity (typically before placement of continuity diaphragms) need only be applied as a simple span loading. Continuity reinforcement shall be provided at supports for loads applied after establishing continuity.

15.5.4.C.3 *Continuous Structure Configuration*

Girder type, depth and number of lines shall be identical in adjacent spans over intermediate piers. Girder type, depth and number of lines may be changed at expansion joints.

15.5.4.C.4 *Girder Ends*

Prestressed concrete girders shall have a standard end type in accordance with Section 5.6.2.E. Prestressing strands at girder ends shall be extended into diaphragms and made continuous in accordance with Section 5.1.3.D.

Girder end skew angles for trapezoidal tub, slab, wide flange deck, wide flange thin deck and deck bulb-tee prestressed concrete girders shall be limited to 30 degrees. Girder end skew angles for all other prestressed concrete girders shall be limited to 45 degrees.

The splitting resistance of pre-tensioned anchorage zones shall be as described in LRFD-BDS Section 5.9.4.4.1. The end vertical reinforcement shall not be larger than #5 bars and spacing shall not be less than 2½″. The remaining splitting reinforcement not fitting within the h/4 zone may be placed beyond the h/4 zone at a spacing of 2½″.

15.5.4.C.5 *Diaphragms*

Diaphragms for prestressed concrete girder superstructures shall be cast-in-place concrete.

Diaphragms shall be oriented parallel to girder support skew. On curved bridges, diaphragms shall be placed on radial lines. Intermediate and end diaphragms shall be in accordance with Bridge Standard Drawings.

Except for Prestressed Concrete Wide Flange Deck Girder and Prestressed Concrete Slab Girder bridges, intermediate diaphragms shall be provided for all prestressed concrete girder bridges in the following situations:

- Spans crossing a roadway with a minimum vertical clearance of 20'-0" or less.
- Spans crossing a railway with a minimum vertical clearance of 23'-4" or less from the top of rail.
- Spans crossing a water body or waterway with a minimum vertical clearance of 6'-0" of less from the 100-year MRI water surface level.
- Spans that will possibly or likely have vehicular traffic under the span in the future with a minimum vertical clearance of 20'-0" or less.

Intermediate diaphragms shall be equally spaced between bearing centerlines at a spacing not to exceed 50'.

Intermediate diaphragms shall be full depth for structures crossing over roads with average daily traffic (ADT) greater than 50,000, in accordance with Section 5.6.4.C.4.

15.5.4.C.6 *Barrier and Sidewalk Load Distribution*

The dead load of one traffic barrier or sidewalk shall not be distributed over more than three girder webs.

15.5.4.C.7 *Composite Action*

Composite section properties including effective flange width of the composite deck shall be in accordance with Section 5.6.2.B.

15.5.4.C.8 *Dead Loads*

The bridge deck dead load to be applied to a girder shall be based on the full bridge deck thickness. The pad/haunch weight due to the maximum pad/haunch height shall be added to that load over the full length of the girder.

When the depth of the pad/haunch between the top of the prestressed concrete girder and the underside of the deck at the centerline of the girder exceeds 6″, reinforcement shall be provided in the pad in accordance with Figure 5.6.4-2.

15.5.4.C.9 *Girder Stirrups*

Girder stirrups shall be field bent over the top mat of reinforcement in the bridge deck unless pre-bent hooks are allowed by the WSDOT standard girder type or Additional reinforcement is provided in conformance with Section 5.6.2.H.

15.5.4.C.10 *Transformed Section Properties*

Transformed section properties shall not be used for design of prestressed concrete girders. Gross section properties shall be used.

15.5.4.C.11 *Deck Shrinkage*

The elastic gain in prestressing strands due to slab shrinkage shall be computed in accordance with LRFD-BDS Section 5.9.3.4.3.d. Deck shrinkage shall be considered as an external force applied to the composite section for the Service I, Service III, and Fatigue I limit states. The deck shrinkage strain shall be computed as 50-percent of the strain determined by LRFD-BDS Equation 5.4.2.3.3-1.

15.5.4.C.12 *Deck Girder Superstructures*

The term "deck girder" refers to a prestressed concrete girder whose top flange or surface is the driving surface, with or without an overlay, including slab and deck bulb-tee girders.

Unless noted otherwise deck girders that are not connected to adjacent girders shall use a Type 1 deck protection system; girders that only have shear connections with adjacent girders shall use a Type 3 or Type 4 deck protection system; and girders that have moment connections with adjacent girders shall use Type 2 or Type 3 deck protection systems.

Deck girders without a composite CIP deck slab shall have a minimum concrete cover of 2″ over the top mat. The top mat of reinforcement in the top flange shall be epoxy-coated.

15.5.4.C.13 *Slab Girders*

Slab girder spans between centerline bearings shall be limited to the prestressed concrete girder height multiplied by 30. A minimum 5″ composite CIP bridge deck shall be placed over slab girders directly supporting traffic loadings. The CIP concrete bridge deck shall at a minimum be Class 4000D concrete with one layer of #5 epoxy coated reinforcement in both the transverse and longitudinal directions. The longitudinal reinforcement shall be spaced at 12 inches maximum and the transverse reinforcement shall be spaced at 6 inches maximum.

15.5.4.C.14 *Deck Bulb-Tee Girders*

Deck bulb-tee girders shall be limited to pedestrian bridges, temporary bridges and to widening existing similar structures.

15.5.4.C.15 *Wide Flange Deck Girders*

Wide flange deck girders shall be limited to single-span bridges.

The top flanges shall be connected with UHPC. These bridges shall have a polyester polymer concrete overlay or, if the approach roadways are paved with HMA, an HMA overlay is also acceptable. A waterproofing membrane shall be provided with an HMA overlay.

15.5.4.C.16 *Wide Flange Thin Deck Girders*

Two mats of transverse reinforcement in the CIP bridge deck shall be designed to resist live loads and superimposed dead loads using a Type 1 Deck Protection System. The longitudinal reinforcement shall be spaced at 12 inches maximum and the transverse reinforcement shall be spaced at 6 inches maximum.

15.5.4.C.17 *Tub Girders*

Drains shall be placed in the centerline of the bottom flange at the low points of each cell. Drain hole details shall be in accordance with Bridge Standard Drawing 5.6-A9-3.

15.5.4.C.18 *Spliced Prestressed Concrete Girders*

Closure joints shall be CIP concrete with a minimum length of 2′-0″. The sequence of placing concrete for the closure joints and deck shall be specified in the plans.

Concrete cover to web stirrups at the CIP closure at pier diaphragms shall not be less than 2½″. If intermediate diaphragm locations coincide with CIP closures between precast segments, then the concrete cover at the CIP closures shall not be less than 2½″.

Girders shall be post-tensioned prior to deck placement, unless otherwise noted in the RFP.

Ducts for longitudinal post-tensioning shall be kept below the bridge deck.

15.5.5 Concrete Bridge Decks

Concrete bridge decks shall be designed using the Traditional Design of LRFD-BDS Section 9.7.3.

For web spacing in excess of 12 feet or cantilever overhang in excess of 6 feet, transverse post-tensioning shall be provided in the deck.

For structures that include sidewalks, the construction joint between the sidewalk and the deck shall be a smooth surface.

Longitudinal expansion or isolation joints in bridge decks are not permitted.

15.5.5.A Bridge Deck Requirements

The minimum bridge deck thickness shall be 5″ for slab and deck bulb-tee prestressed concrete girder superstructures, 7.5″ for other concrete superstructures, 8.0″ for steel girder superstructures, and 8.5″ (including 3.5″ stay-in-place deck panel and 5″ CIP concrete deck) for superstructures with SIP deck panels. This minimum thickness may be reduced by 0.5″ for bridges with Deck Protection Systems 2, 3 and 5. For bridge deck overhangs that support traffic barriers, the minimum thickness shall be 8”.

The distance from the top of the bridge deck to the top of the girder at centerline bearing at centerline of girder is represented by the “A” Dimension.

A roughened surface or a shear key shall be provided at deck construction joints.

15.5.5.B Bridge Deck Reinforcement

Top transverse reinforcement shall be hooked at the deck slab edge unless a traffic barrier is not used.

Longitudinal deck slab reinforcement shall be provided in accordance with Section 5.7.2.B.

The minimum clearance between top and bottom reinforcing mats shall be 1″.

The minimum cover over the top layer of reinforcement shall be in accordance with the appropriate Deck Protection System. The minimum cover below the bottom layer reinforcement shall be 1.0″.

The minimum amount of reinforcement in each direction shall be 0.18 in^2/feet for the top mat and 0.27 in^2/feet for the bottom mat.

The maximum bar spacing in both transverse and longitudinal directions for the top mat, and transverse direction of the bottom mat shall not exceed 12″. The maximum bar spacing for the bottom longitudinal direction within the effective length, as specified in LRFD-BDS Section 9.7.2.3, shall not exceed the deck thickness.

15.5.5.C Stay-in-Place (SIP) Deck Panels

SIP deck panels shall be precast concrete and their details shall be in accordance with Bridge Standard Drawing 5.6-A10-1. SIP steel deck forms are not permitted.

SIP deck panels shall not be used in longitudinal negative moment regions of continuous superstructures, unless the deck is longitudinally post-tensioned.

For a bridge widening or phased construction, SIP deck panels shall not be used in the bay adjacent to the existing structure.

SIP deck panels shall not be used on prestressed concrete girders with flanges less than 12″ wide.

SIP deck panels shall not be used on steel girder bridge superstructures.

15.5.5.D Bridge Deck Protection

All new bridge decks, precast or cast-in-place slabs, and deck girder structures shall utilize a deck protection system in accordance with this section and Section 5.7.4.A. Widening of existing bridge decks and slab bridges shall be in accordance with Section 5.7.4.B.

15.5.5.E Bridge Deck HMA Paving

Asphalt resurfacing including bituminous surface treatment (BST) on bridge decks and slab bridges shall be in accordance with the Bridge deck Condition Report (BCR) provided for each bridge. Construction shall be in accordance with the bridge paving specifications included in the RFP.

15.6 Steel Structures

15.6.1 Design Considerations

15.6.1.A Codes, Specification, and Standards

Steel highway bridges shall be designed to the following codes and specifications:

- LRFD-BDS, latest edition
- LRFD-SGS

The following codes and specifications shall govern steel bridge construction:

- WSDOT *Standard Specifications*, latest edition
- AASHTO/AWS D1.5M/D1.5: *Bridge Welding Code*, latest edition

15.6.1.B WSDOT Steel Bridge Practice

Unshored composite construction is used for plate girder and box girder bridges. Shear connectors shall be placed throughout positive and negative moment regions, for full composite behavior. A minimum of one percent longitudinal deck steel, in accordance with LRFD-BDS Article 6.10.1.7, shall be placed in negative moment regions. Additionally, due to cracking observed in some positive moment regions on some recent steel girder structures, the one percent longitudinal deck steel is required to be placed the full length of the bridge. For service level stiffness analysis, such as calculating live load moment envelopes, the bridge deck shall be considered composite and uncracked for the entire bridge length. For negative moment at strength limit states, the bridge deck shall be ignored while reinforcing steel is included for stress and section property calculations.

Stiffeners used to connect cross frames shall be welded to top and bottom flanges. Jacking stiffeners shall be used adjacent to bearing stiffeners, on girder or diaphragm webs, in order to accommodate future bearing replacement. Coordinate jack placement in substructure and girder details.

Steel framing shall consist of main girders and cross frames. Bottom lateral systems shall only be used when required for torsional stability in curved bridges and when temporary bracing is not practical. When lateral systems are used, they shall be detailed carefully for adequate fatigue life.

Standard corrosion protection for steel bridges is the *Standard Specifications* Section 6-07 four-coat paint system west of the Cascades and where paint is required for appearance. Unpainted weathering steel shall only be used east of the Cascades.

WSDOT does not allow the use of steel stay-in-place deck forms.

15.6.1.C Preliminary Girder Proportioning

Live load deflections shall be limited in accordance with the optional criteria of LRFD-BDS Articles 2.5.2.6.2 and 3.6.1.3.2.

The superstructure depth shall be shown as the distance from the top of the bridge deck to the bottom of the web. On straight bridges, interior and exterior girders shall be designed and detailed as identical. Spacing should be such that the distribution of wheel loads on the exterior girder is close to that of the interior girder. The number of girder lines should be minimized, with a maximum spacing of 14-16 feet. Steel bridges shall be redundant, with three or more girders lines for I girders and two or more boxes for box girders, except as otherwise allowed by the RFP Criteria.

15.6.1.D Bridge Steels

Use AASHTO M 270/ASTM A 709 grades 50 or 50W for plate girders and box girders. Use of AASHTO M 270/ASTM A 709 Grade HPS 70W is permissible but availability is limited and shall be confirmed prior to actual use in design. AASHTO M 270 grade HPS100W may only be used if allowed by the RFP Criteria. For wide flange beams, use AASHTO M 270/ASTM A 709 Grade 50S or ASTM A 992. For ancillary members such as expansion joint headers, utility brackets, bearing components or small quantities of tees, channels, and angles, ASTM M 270/ASTM A 709 bridge steels are acceptable but are not required. In these cases, equivalent ASTM designated steels may be used.

All main load-carrying members or components subject to tensile stress shall be identified in the plans and shall meet the minimum Charpy V-notch (CVN) fracture toughness values as specified in LRFD-BDS Table 6.6.2-2, temperature zone 2. Fracture critical members or components shall also be designated in the plans.

Structural tubes and pipes are not considered prequalified under the *Bridge Welding Code*. They are covered under the Structural Welding Code AWS D1.1. Structural tubing ASTM A 500 shall not be used for dynamic loading applications. ASTM A 1085 is a newer cold formed and welded HSS section specification that is a Gr 50 steel. Supplements for heat treating and CVNs are included and may also be specified. CVN tests are typically performed in the flats of the HSS square or rectangular tube sections. CVN values in the bend radius of the tubes may be lower than values obtained in the flats, however recent informational testing has shown the CVN values in the corners meet or exceeds the requirements for Fractured Critical Member steels in temperature zone 2. Heat treating of the sections can improve the values, but no data is currently available. ASTM A 1085 shall not be specified for dynamic loading applications until further data is available. Availability and minimum tonnage or bundle quantity orders shall be investigated prior to specifying ASTM A 1085.

15.6.1.E Plate Sizes

Plate thicknesses of less than 5⁄16 inches shall not be used for bridge applications.

15.6.1.F Fasteners

All bolted connections shall be friction type (slip-critical). Assume Class B faying surfaces where inorganic zinc primer is used.

Refer to BDM Section 6.1.9 for General Guidelines for Steel Bolts

15.6.2 Girder Bridges

15.6.2.A Tub or Box Girders

Steel box girders shall be trapezoidal tub sections. Tub girders will be referred to herein as box girders, as in LRFD-BDS Article 6.11.

A top lateral system shall be placed inside the girder and shall be treated as an equivalent plate for design, closing the open section and providing torsional stiffness until the bridge deck is fully cured. Stability of the shape shall be ensured for all stages of construction in accordance with LRFD-BDS Article 6.11.3. Box girder bridges with a multiple box girder cross section shall have a single bearing per box. For bridges of a single box girder cross section, two bearings per box shall be used. Plate diaphragms with access holes shall be used in place of pier cross frames.

With the exception of effects from inclined webs, top flanges and webs shall be designed as if they were part of individual I-girders.

In order to maximize web spacing while minimizing bottom flange width, place webs out of plumb on a slope of 1 in 4. When required to stiffen bottom flanges in compression tee sections shall be used for longitudinal stiffeners. Channel bracing may be used at cross frame locations for transverse stiffeners. Bottom flange stiffeners shall be terminated at field splices. Otherwise, carefully ground weld terminations are required in tension regions with high stress range. Stiffener plates shall be welded across the bottom flange at cross frame locations, and shall not be combined with web vertical stiffeners.

15.6.2.B Fracture Critical Superstructures

Non-redundant, fracture critical single tub superstructures, and twin I-girder systems, may only be considered if allowed by RFP Criteria. UBIT access or some form of permanent false decking or other inspection access is required for fracture critical inspections. The maximum roadway width for either a single box or twin I-girder superstructure is 27 feet. Where roadway width exceeds 27 feet, additional webs/girders shall be used. Mainline structures exceeding 38 feet in width shall use four webs/girders minimum.

Increased vertical clearance from mainline traffic shall be provided for either of these bridge types. The minimum is 20 feet. The web depths may be reduced below LRFD-BDS Table 2.5.2.6.3-1 minimums provided live load deflection criteria are met. However, web depth less than 5′-0″ is not permitted. The limit state load modifier relating to redundancy, η_r = 1.05, as specified in LRFD-BDS Section 1.3.4, shall be used in the design of non-redundant steel structures. For load rating non-redundant bridges, a system factor of 0.85 is required in the AASHTO *Manual for Bridge Evaluation* (MBE) on the axial and flexural capacity of the girders. The girder design shall satisfy both the LRFD-BDS code and the MBE.

The LRFD-BDS approximate live load distribution factors are not applicable to these girder types. The level rule or the preferred refined analysis shall be used. Where highly curved, only a refined analysis shall be used.

Fracture-critical members and system redundant members shall be designed for infinite fatigue life, which requires design using the Fatigue I load combination specified in LRFD-BDS Table 3.4.1-1 and the nominal fatigue resistance specified in Article 6.6.1.2.5.

15.6.3 Design of I-Girders

15.6.3.A Limit States for LRFD-BDS

The fatigue live load specified in LRFD-BDS Article 3.6.1.4 shall be used for checking girder details in accordance with article 6.6. It is generally possible to meet the constant amplitude fatigue limit (CAFL) requirement for details with good fatigue performance. Limiting the calculated fatigue range to the CAFL ensures infinite fatigue life. Webs shall be checked for fatigue loading in accordance with LRFD-BDS Article 6.10.5.3, using the calculated fatigue stress range for flexure or shear. Flanges and webs shall meet strength limit state requirements for both construction and final phases.

Pier cross frames shall be designed for seismic loading, extreme event load combination. Bolts shall be treated as bearing type connections with LRFD-BDS Article 6.5.4.2 resistance factors. The resistance factor for all other members is 1.0 at extreme limit state.

15.6.3.B Composite Section

Live load plus impact shall be applied to the transformed composite section using E_s/E_c, commonly denoted n. Long-term loading (dead load of barriers, signs, luminaries, overlays, etc.) shall be applied to the transformed composite section using 3n. Positive moments are applied to these composite sections accordingly; both for service and strength limit states. The bridge deck may be considered effective in negative moment regions provided tensile stresses in the deck are below the modulus of rupture. This is generally possible for Service I load combination and fatigue analysis. For strength limit state loadings, the composite section includes longitudinal reinforcing while the bridge deck is ignored.

15.6.3.C Flanges

The maximum flange thickness is 3-inches. All plates for flange material 2" or less shall be purchased such that the ratio of reduction of thickness from a slab to plate shall be at least 3.0:1.

Plates for flange material greater than 2″ thick shall be supplied based on acceptable ultrasonic testing (UT) inspection in accordance with ASTM A 578. UT scanning and acceptance shall be as follows:

- The entire plate shall be scanned in accordance with ASTM A 578 and shall meet Acceptance Standard C, and
- Plate material within 12-inches of flange complete joint penetration splice welds shall be scanned in accordance with ASTM A 578 Supplementary S1 and shall meet Acceptance Standard C

15.6.3.D Webs

If different web thickness is needed, the transition shall be at a welded splice. Horizontal web splices shall not be used unless web height exceeds 12′-6″. All welded web splices on exterior faces of exterior girders and in tension zones elsewhere shall be ground smooth. Web splices of interior girders need not be ground in compression zones.

15.6.3.E Transverse Stiffeners

Transverse stiffeners shall be used in pairs at cross frame locations on interior girders and on the inside of webs of exterior girders. They shall be welded to the top flange, bottom flange and web at these locations. This detail is considered fatigue category C' for longitudinal flange stress. Stiffeners used between cross frames shall be located on one side of the web, welded to the compression flange, and cut short of the tension flange. Stiffeners located between cross frames in regions of stress reversal shall be welded to one side of the web and cut short of both flanges. Alternatively, they may be welded to both flanges if fatigue Category C' is checked.

Stiffened webs require end panels to anchor the first tension field. The jacking stiffener to bearing stiffeners space shall not be used as the anchor panel. The first transverse stiffener shall be placed at no greater spacing than 1.5 times the web depth from the bearing or jacking stiffener.

15.6.3.F Longitudinal Stiffeners

Longitudinal stiffeners may be used in long spans where web depths exceed 10 feet in accordance with LRFD-BDS Article 6.10.11.3. Weld terminations for longitudinal stiffeners are fatigue prone details and shall be detailed accordingly. Longitudinal stiffener plates shall be continuous, splices being made with full penetration welds before being attached to webs. Transverse stiffeners shall be pieced to allow passage of longitudinal stiffeners.

15.6.3.G Bearing Stiffeners

Bearing stiffeners shall be vertical under total dead load.

Pier cross frames may transfer large seismic lateral loads through top and bottom connections. Weld size shall be designed to ensure adequate load path from deck and cross frames into bearings.

15.6.3.H Cross Frames

Cross frames and connections shall be detailed for repetitive fabrication, adjustment in the field, and openness for inspection and painting. Cross frames consisting of back-to-back angles separated by gusset plates are not permitted. Cross frames are generally patterned as K-frames or as X-frames. Oversize holes will not be allowed in cross frame connections if girders are curved.

Intermediate cross frames for straight girders with little or no skew shall be designed as secondary members. Member sizes shall be selected to meet minimum slenderness requirements and design connections only for anticipated loads, not for 75 percent strength of member.

Cross frames shall be installed parallel to piers for skew angles of 0 degrees to 20 degrees. For greater skew angles, other arrangements may be used. Cross frames for curved girder bridges are main load carrying members and tension components shall be so designated in the plans. Web stiffeners at cross frames shall be welded to top and bottom flanges.

Refer to BDM Section 6.3.8 for guidance on design and detailing of cross frames.

15.6.3.I Bottom Laterals

In accordance with Section 6.1.2, bottom lateral systems shall be avoided except when required for stability in curved bridges and shall be used only when temporary bracing is not practical.

Where lateral gusset plates are fillet welded to girder webs, the fatigue stress range in the girder is limited to Category E without transition radius or Category D with carefully made transition radius. The gusset plates shall be bolted to the girder web in regions of high tension stress range.

15.6.3.J Bolted Field Splice for Girders

Field splices shall be bolted. Bolted web splices shall not involve thin fill material. Thickness transitions for webs, if needed, shall be done with welded shop splices.

Fillers used in bolted splices shall be developed as specified in LRFD-BDS Article 6.13.6.1.4. Splice bolts shall be checked for Strength load combinations and slip at Service II load combination. When faying surfaces are blasted and primed with inorganic zinc paint, a Class B surface condition shall be assumed.

15.6.3.K Camber

Camber shall include effects of profile grade, superelevation, anticipated dead load deflections, and bridge deck shrinkage (if measurable). Permanent girder deflections shall be shown in the plans in the form of camber diagrams and tables. Dead load deflections are due to steel self-weight, bridge deck dead load, and superimposed dead loads such as overlay, sidewalks, and barriers. A constant distance from top of web to top of bridge deck shall be assumed for design, however forms and haunch height shall be adjusted to meet bridge deck thickness and profile as specified in *Standard Specifications* Section 6-03.3(39).

Two camber curves are required, one for total dead load plus bridge deck formwork and one for steel framing self-weight. The difference between these curves is used to set bridge deck forms.

Girder self-weight shall include the basic section plus stiffeners, cross frames, welds, shear studs, etc. These items may be accounted for by adding an appropriate percentage of basic section weight. Total dead load camber shall consist of deflection due to:

1. Steel weight, applied to steel section. Include 10 psf bridge deck formwork allowance in the total dead load camber, but not in the steel weight camber. The effect of removing formwork is small in relation to first placement, due to composite action between girders and bridge deck. It isn't necessary to account for the removal.
2. Bridge deck weight, applied to steel section.
3. Traffic barriers, sidewalks, and overlays, applied to long-term composite section using 3n. Do not include weight of future overlays in the camber calculations.
4. Bridge deck shrinkage (if ≥ ¾″).

Traffic barriers, sidewalks, overlays, and other items constructed after the bridge deck placement shall be analyzed as if applied to the long-term composite section full length of the bridge. The modulus of elasticity of the bridge deck concrete shall be reduced to one third of its short term value.

For bridge deck shrinkage calculation, apply a shrinkage strain of 0.0002 to the long-term composite section using 3n.

In addition to girder deflections, girder rotations at bearing stiffeners shall be shown. Camber tolerance is governed by the *Bridge Welding Code* AWS D1.5, Chapter 3.5. A note of clarification shall be added to the plan camber diagram: "For the purpose of measuring camber tolerance during shop assembly, assume top flanges are embedded in concrete without a designed haunch." This allows a high or low deviation from the theoretical curve, otherwise no negative camber tolerance is allowed.

A screed adjustment diagram shall be included with the camber diagram. This diagram, with dimension table, shall be the remaining calculated deflection just prior to bridge deck placement, taking into account the estimated weight of deck formwork and deck reinforcing. The weight of bridge deck formwork may be taken equal to 10 psf, or the assumed formwork weight used to calculate total camber. The weight of reinforcing may be taken as the span average distributed uniformly. The screed adjustment should equal: (Total Camber – Steel Camber) - (deflection due to forms + rebar). The screed adjustment shall be shown at each girder line. This will indicate how much deflection and twisting is anticipated during bridge deck placement, primarily due to span curvature and/or skew.

These adjustments shall be applied to theoretical profile grades, regardless of actual steel framing elevations. The adjustments shall be designated "C". The diagram shall be designated as "Screed Setting Adjustment Diagram." The table of dimensions shall be kept separate from the girder camber, but at consistent locations along girders. That is, at $\frac{1}{10}^{th}$ points or panel points. A cross section view shall be included with curved span bridges, showing effects of twisting.

For the purpose of setting bridge deck soffit elevations, a correction shall be made to the plan haunch dimension based on the difference between theoretical flange locations and actual profiled elevations. The presence of bridge deck formwork shall be noted at the time of the survey. The presence of false decking need not be accounted for in design or the survey.

15.6.3.L Bridge Deck Placement Sequence

The bridge deck shall be placed in a prescribed sequence allowing the concrete in each segment to shrink with minor influence on other segments. Negative moment regions (segments over interior piers) shall be placed after positive moment regions have had time to cure. Successive segments shall not be placed until previous segments attain sufficient strength. The designer shall check bridge deck tensile stresses imposed on adjoining span segments.

15.6.3.M Bridge Bearings for Steel Girders

Make bearing selection consistent with required motions and capacities.

15.6.3.N Surface Roughness and Hardness

The standard measure of surface roughness is the microinch value. Surface roughness shall be shown on the plans for all surfaces for which machining is required unless covered by the *Standard Specifications* or Special Provisions. Surface hardness of thermal cut girder flanges is also controlled.

15.6.3.O Welding

The minimum fillet weld size shall be as shown in the following table. Weld size is determined by the thicker of the two parts joined unless a larger size is required by calculated stress. The weld size need not exceed the thickness of the thinner part joined.

Base Metal Thickness of Thicker Part Joined	Minimum Size of Fillet Weld
To ¾″ inclusive	¼″
Over ¾″	$\frac{5}{16}$″

15.6.3.P Shop Assembly

For straight girders, a progressive longitudinal shop assembly shall be performed to ensure proper fit of subsections, field splices, and cross frame connections, etc., in the field. Progressive transverse assembly, in combination with progressive longitudinal assembly shall be performed for bridges with horizontal curvature or skews greater than 20-degrees. For transverse assembly, specify all cross frame and pier diaphragm connections to be completed while assembled.

During shop assembly, girder segments shall be blocked or supported in the no-load condition (no gravity effects). For curved I-girders, cross frames shall be fabricated to fit the no-load condition. Design of cross frames and pier diaphragms shall take into account twist and rotations of webs during construction. This situation should be carefully studied by finite element analysis to determine amount and type of movement anticipated during construction. Unlike curved girders rotating away from plumb at midspan, girder webs for skewed construction shall be kept plumb at piers.

For bridges with skews greater than 20-degrees, the fit of girder segments, cross frames, and pier diaphragms shall be carefully analyzed during design to select the proper fit condition, which shall be either the no-load condition of the steel dead load condition. The detailing, fabrication, and shop assembly shall be specified to match the condition used in the analysis and design.

15.6.4 Plan Details

15.6.4.A General

Detailing practice shall follow industry standards. Designations for structural steel can be found in AISC *Detailing for Steel Construction*. Detailing shall also conform to national unified guidelines published by AASHTO/NSBA *Steel Bridge Collaboration*.

Connections in the field shall be bolted. Cross frame members may be shop bolted or welded assemblies and shall be shipped to the field in one unit. Connections of bolted cross frame assemblies shall be fully tensioned prior to shipping. Cross frame assemblies shall be field bolted to girders during erection.

15.6.4.B Framing Plan

The Framing Plan shall show ties between the survey line, girder lines, backs of pavement seats, and centerlines of piers. Locate panel points (cross frame locations). Provide geometry, bearing lines, and transverse intermediate stiffener locations. Show field splice locations. Map out different lateral connection details.

15.6.4.C Girder Elevation

The Girder Elevation is used to define flanges, webs, and their splice locations. Show shear connector spacing, location, and number across the flange. Show shear connector locations on flange splice plates or specifically call out when no connectors are required on splice plates. Locate transverse stiffeners and show where they are cut short of tension flanges. Show the tension regions of the girders with a V for the purpose of ordering plate material, inspection methods (NDE), and *Bridge Welding Code* acceptance criteria. Identify tension welded butt splices for which radiographic examination (RT) is required. Permissible welded web splices shall be shown. If there are fracture critical components, they shall be clearly identified as FCM. If a member is identified as fracture critical with an "FCM" symbol, it is not necessary to also call the plate or member with a "V" for Charpy-V-Notch as this is covered with the "FCM" designation.

15.6.4.D Typical Girder Details

Specific sheets shall be devoted to showing typical details to be used throughout the girders. Such details include the weld details, various stiffener plates and weld connections, locations of optional web splices, and drip plate details. Field splices for flanges shall accommodate web location tolerance of ± ¼″ in accordance with the AWS

Bridge Welding Code 5.5. Allow a minimum of ¼″ for out of position web plus ⅜″ for fillet weld, or a total of ⅝″ minimum clear between theoretical face of web and edge of splice plate. The bottom flange splice plate shall be split to allow moisture to drain (use 4 equal bottom flange splice plates). The fill plate does not need to be split.

Vertical stiffeners used to connect cross frames shall be welded to top and bottom flanges to reduce out-of-plane bending of the web. All stiffeners shall be coped, clipped (or cut short in the case of transverse stiffeners without cross frames) a distance between 4tw and 6tw to provide web flexibility, in accordance with LRFD-BDS Article 6.10.11.1.1.

15.6.4.E Cross Frame Details

Show member sizes, geometrics (work lines and work points), and connection details. Double angles shall not be used for cross frames. Cross frames shall be complete subassemblies for field installation.

Internal cross frames and top lateral systems for box girders are shop welded, primarily. All connection types shall be closely examined for detail conflict and weld access. Clearance between bridge deck forming and top lateral members shall be considered.

15.6.4.F Camber Diagram and Bearing Stiffener Rotation

Camber curves shall be detailed to provide dimensions at tenth points. Dimensions may also be given at cross frame locations. In order to place bearing stiffeners in the vertical position after bridge deck placement, show expected girder rotations at piers.

Show deflection camber only. Geometric camber for profile grade and superelevation will be calculated by the shop detailer from highway alignment shown on the Layout sheets.

A separate diagram and table, with bridge cross section, shall be included to show how elevations at edges of deck can be determined just before concrete placement. This will give adjustments to add to profile grades, based on remaining dead load deflections, with deck formwork and reinforcing being present.

15.6.4.G Bridge Deck

New bridge decks for steel I-girders or box girders shall use Deck Protection System 1.

The bridge deck shall be detailed in section and plan views. The current WSDOT policy requires one percent minimum steel be provided for the entire length of the bridge so typically only one section view is required for single or continuous spans.

The pad dimension is assumed to be constant throughout the span length. Ideally, the girder is cambered to compensate for dead loads and vertical curves. However, fabrication and erection tolerances result in considerable deviation from theoretical elevations. The pad dimension is therefore considered only a nominal value and is adjusted as needed along the span once the steel has been erected and profiled. The screed for the slab is to be set to produce correct roadway profile. The plans shall reference this procedure contained in *Standard Specifications* Section 6-03.3(39). The pad dimension is to be noted as nominal.

15.6.4.H Handrail Details, Inspection Lighting, and Access

When required by the RFP Criteria, include handrails with typical girder details. Locations may be adjusted to avoid conflicts with other details such as large gusset plates. Box girders require special consideration for inspection access. Access holes or hatches shall be detailed to exclude birds and the public. They shall be positioned where ladders can be used to gain access. Locate hatches in girder webs at abutments. Provide for round trip access and penetrations at all intermediate diaphragms. Access for removing bridge deck formwork shall be provided. Box girders shall have electrical, inspection lighting, and ventilation details for the aid of inspection and maintenance. Refer to the *Design Manual* Chapter 1040 for bridge inspection lighting requirements.

To facilitate inspection, interior paint shall be SAE AMS Standard 595 color number 17925 (white). One-way inspection of all interior spaces shall be made possible by round trip in adjoining girders. This requires some form of walkway between boxes and hatch operation from both sides. If locks are needed, they must be keyed to one master. Air vents shall be placed along girder webs to allow fresh air to circulate.

15.6.4.I Box Girder Details

Provide a top lateral system in each box, full length of a girder.

The top laterals shall be bolted directly to the top flange or intermediate bolted gusset plate (in which case, the lateral members may be welded to the gusset plate). In order to maximize the clearance for deck forms, all lateral connections shall progress down from the bottom surface of the top flange. The haunch distance between top of web and deck soffit shall be 6″ or greater to allow deck forming to clear top lateral members.

To facilitate continuous welding of the bottom flange to webs, the stiffeners shall be held back and attached to the bottom flange by a member brought in after the bottom longitudinal welds are complete.

The offset between center of web and edge of bottom flange shall be 2″

Use tee shapes, either singly or in pairs, for stiffening wide bottom flanges.

Box girder inside clear height shall be 5 feet or more to provide reasonable inspection access. Less than 5 feet inside clear height is not be permitted.

Drain holes shall be installed at all low points.

Geometrics for boxes shall be referenced to a single workline, unless box width tapers. The box cross section remains tied to a centerline intersecting this workline and normal to the bridge deck. The section rotates with superelevation transition rather than warping.

15.6.5 Painting of Existing Steel Bridges

Refer to Section 6.6 for requirements and procedures associated with painting of existing steel bridges.

15.6.6 Corrosion of Steel Foundations and Buired Structures

Refer to Section 6.7 for corrosion and abrasion protection requirements to ensure a minimum 75-year design life for steel foundation elements and metal plate buried structures.

15.7 Substructure Design

15.7.1 General Substructure Considerations

15.7.1.A Foundation Seals

Requirements from Section 7.1.6 shall be followed.

15.7.1.B Scour

Requirements from Section 7.1.7 shall be followed. The hydraulic engineer of record replaces the Hydraulic Office where mentioned.

15.7.1.C Combination of Extreme Event Effects

15.7.1.C.1 *Downdrag*

Seismic soil liquefaction induced downdrag forces shall be included in the Extreme Event I limit state. Downdrag loads may be decoupled from the inertial and overstrength load effects.

15.7.1.C.2 *Lateral Ground Displacement*

Where lateral ground displacement (e.g. lateral spreading and lateral flow) is expected, the ground displacement may be decoupled from the inertial and overstrength load effects. See WSDOT *Geotechnical Design Manual* Sections 6.4.2.7 and 6.5.4 for additional guidance on combining loads when lateral ground displacement occurs.

15.7.1.C.3 *Scour*

The effects of local scour shall be combined with earthquake loading. At the Extreme Event I limit state, the design shall consider a scour depth equal to 50 percent of the total scour at scour design flood depth.

15.7.2 Foundation Modeling for Seismic Loads

15.7.2.A General

Bridge modeling for seismic events shall be in accordance with requirements of the LRFD-SGS Section 5.

If liquefaction is a design condition, the bridge shall be analyzed using both the static and liquefied soil conditions in accordance with LRFD-SGS Section 6.8.

15.7.2.B Bridge Model Section Properties

In general, gross section properties may be assumed for all members, except concrete columns and other ductile reinforced concrete members. Seismic response analysis for deep foundations shall be based on a bracketed approach using a stiff substructure response and a soft substructure response.

15.7.2.B.1 *Cracked Properties for Columns*

Effective section properties shall be in accordance with the LRFD-SGS Section 5.6.

15.7.2.B.2 *Shaft Properties*

The shaft concrete strength and construction methods lead to significant variation in shaft stiffness described as follows:

For a stiff substructure response:

1. Use f'_c to calculate the modulus of elasticity.
2. Use I_g based on the maximum oversized shaft diameter allowed by *Standard Specifications* Section 6-19.
3. When permanent casing is used, increase shaft I_g using the transformed area of the casing.

For a soft substructure response:

1. Use f'_c to calculate the modulus of elasticity.
2. Use I_g based on the nominal shaft diameter. Alternatively, Ie may be used when it is reflective of the actual load effects in the shaft.
3. When permanent casing is used, increase shaft I_g using the transformed area of the casing.

15.7.2.B.3 *Cast-in-Place Pile Properties*

For a stiff substructure response:

1. Use 1.5 f'_c to calculate the modulus of elasticity.
2. Use the pile I_g plus the transformed casing moment of inertia.

For a soft substructure response:

1. Use 1.0 f'_c to calculate the modulus of elasticity.
2. Use pile I_g, neglecting casing properties.

15.7.2.C Spread Footing Modeling Methods

The method for calculating footing springs is given in Section 7.2.7.

15.7.2.D Deep Foundation Modeling Methods

The method used to model deep foundations shall conform to LRFD-SGS Section 5.3.

15.7.2.D.1 *Group Effects*

The reduction factors for lateral resistance due to the interaction of deep foundation members is provided in LRFD-SGS Section 8.12.2.5.

15.7.2.D.2 *Shaft Caps and Pile Footings*

In areas prone to scour or lateral spreading, the passive resistance of caps and pile-supported footings shall be neglected.

15.7.2.E Design of Deep Foundations for Lateral Forces

15.7.2.E.1 *Determination of Tip Elevations*

A parametric study or analysis shall be performed to evaluate the sensitivity of the depth of the shaft or pile to the ground level displacement of the structure in order to determine the depth required for stable, proportionate lateral response of the structure.

15.7.2.E.2 *Design for Lateral Loads*

The structural design of shafts and piles shall consider the following conditions at the applicable limit state:

1. Static soil properties with both stiff and soft shaft or pile properties.
2. Dynamic or degraded soil properties with both stiff and soft shaft or pile properties.
3. Liquefied soil properties with both stiff and soft shaft or pile properties. When lateral spreading is possible, additional loading conditions will need to be analyzed.
4. Scour condition with stiff and soft shaft or pile properties.

15.7.3 Column Design

15.7.3.A Shear Design

At Strength limit states, shear design shall follow the "Simplified Procedure for Nonprestressed Sections" in LRFD-BDS Section 5.7.3.4.1.

15.7.3.B Column Silos

Due to the construction and inspection complications of column silos, the Design-Builder shall attempt to meet balanced stiffness and frame geometry requirements by the other methods suggested in Section 4.1.4 of the LRFD-SGS prior to use of column silos. Column silos shall meet the requirements of Section 7.3.4.

15.7.3.C Longitudinal Reinforcement

The maximum reinforcement ratio shall be 0.04 in SDCs A, B, C and D. The minimum reinforcement ratio shall be 0.007 for SDC A, B, and C and shall be 0.01 for SDC D.

For bridges in SDC A, if oversized columns are used for architectural reasons, the minimum reinforcement ratio of the gross section may be reduced to 0.005, provided all loads can be carried on a reduced section with similar shape and the reinforcement ratio of the reduced section is equal to or greater than 0.01 and $0.133f'_c/f_y$. The column dimensions are to be reduced by the same ratio to obtain the similar shape.

The reinforcement shall be evenly distributed and symmetric within the column.

15.7.3.D Longitudinal Reinforcement Splices

No splices are allowed when the required length of longitudinal reinforcement is less than the conventional mill length of 60-feet. Splicing of longitudinal reinforcement shall be outside the plastic hinge regions. But in SDC A, splices need only be located a minimum of 1.5 times the column diameter from the top and bottom of the column.

For bridges in SDC A and SDC B, no lap splices shall be used for #14 or #18 bars (such splices shall be mechanical splices conforming to *Standard Specifications* Section 6-02.3(24)C). Either lap or mechanical splices may be used for #11 bars and smaller.

Lap splices shall be detailed as Class B splices. The spacing of transverse reinforcement over the length of a lap splice shall not exceed 4-inches or one-quarter of the minimum member dimension.

For bridges in SDC C and SDC D, bars shall be spliced using mechanical splices conforming to *Standard Specifications* Section 6-02.3(24)F. Splices shall be staggered. The distance between splices of adjacent bars shall be greater than the maximum of 20-bar diameters or 24-inches.

15.7.3.E Longitudinal Reinforcement Development

15.7.3.E.1 *Crossbeams*

Development of longitudinal reinforcement shall be in accordance with LRFD-SGS Section 8.8.4. Column longitudinal reinforcement shall be extended into crossbeams as close as practicably possible to the opposite face of the crossbeam.

15.7.3.E.2 *Footings*

Longitudinal reinforcement at the bottom of a column should extend into the footing and rest on the bottom mat of footing reinforcement with standard 90 degree hooks. In addition, development of longitudinal reinforcement shall be in accordance with LRFD-SGS Section 8.8.4 and LRFD-BDS Section 5.10.8.2.1.

15.7.3.E.3 *Drilled Shafts*

Embedment shall be specified using TRAC Report WA-RD 417.1 titled "Noncontact Lap Splices in Bridge Column-Shaft Connections". The requirements of the LRFD-SGS Section 8.8.10 for development length of column bars extended into oversized pile shafts for SDC C and D shall not be used.

The modification factor in LRFD-BDS Section 5.10.8.2.1 that allows l_d to be decreased by the ratio of (A_s required)/(A_s provided), shall not be used.

15.7.3.F Transverse Reinforcement

15.7.3.F.1 *General*

All transverse reinforcement in columns shall be deformed. Columns in SDC A and B may use spirals, circular hoops, or rectangular hoops and crossties. Columns in SDC C and D shall use circular hoop reinforcement. However, rectangular hoops with ties may be used when large, odd shaped column sections are required.

15.7.3.F.2 *Spiral Splices and Hoops*

Welded laps shall be used for splicing and terminating spirals. Spirals or butt-welded hoops are required within plastic hinge regions. Splices shall be staggered. Also, where interlocking hoops are used in rectangular or non- circular columns, the splices shall be located in the column interior. Circular hoops for columns shall be shop fabricated using a manual direct butt weld or resistance butt weld. Field welded splices and termination welds of spirals of any size bar are not permitted in the plastic hinge region, including a zone extending 2'-0" into the connected member.

15.7.3.G Reduced Column Section

Columns with overstrength force reducing details shall be designed in accordance with Section 7.3.7.

15.7.4 Crossbeam

Two-stage integral non-prestressed crossbeams shall be designed in accordance with Section 7.4.1.

15.7.5 Abutment Design and Details

15.7.5.A General

15.7.5.A.1 *Bent-Type and Isolated Abutments*

Bent-type and isolated abutments shall be designed in accordance with Section 7.5.1.

15.7.5.A.2 *Abutments on Structural Earth (SE) Walls and Geosynthetic Walls*

Bridge abutments may be supported on structural earth walls and geosynthetic walls. Abutments supported on these walls shall be designed in accordance with the requirements of this RFP and the following documents (listed in order of importance):

- BDM Section 7.5.2
- WSDOT *Geotechnical Design Manual* Section 15.5.3.5
- LRFD-BDS
- *Design and Construction of Mechanically Stabilized Earth Walls and Reinforced Soil Slopes*, Volume I and II, FHWA-NHI-10-024, FHWA-NHI-10-025

Walls directly supporting bridge abutment spread footings shall be 30 feet or less in total height, measured from the top of the fascia leveling pad to the bottom of the bridge abutment footing. Fall protection or security fencing shall be required at the top of the wall when the wall supports a spread footing abutment.

Structural Earth Walls shall follow the requirements in Section 15.8.1.E.

15.7.5.B Embankment and Backfill

15.7.5.B.1 *General Clearances*

The minimum clearances for the embankment at the front face of abutments shall be as indicated on Standard Plans A-50.10.00 through A-50.40.00.

The minimum clearance between the bottom of the superstructure and the embankment below shall be 3’-0” for girder bridges and 5’-0” for non-girder, slab, and box girder bridges.

15.7.5.B.2 *Abutments on SE Walls and Geosynthetic Walls*

Clearances around bridge abutments shall be provided as shown in Figure 7.5.2-3. Concrete slope protection shall be provided.

15.7.5.B.3 *Drainage and Backfill*

3″ diameter weep holes shall be provided in all bridge abutment walls. These shall be located 6″ above the finish ground line at 12′ on center. In cases where the vertical distance between the top of the footing and the finish groundline is greater than 10′, additional weep holes shall be provided 6″ above the top of the footing.

Gravel backfill for walls shall be provided behind all bridge abutments. A 3′ width of gravel backfill shall be provided behind the cantilever wing walls. An underdrain pipe and gravel backfill for drain shall be provided behind all bridge abutments except abutments on fills with a stem wall height of 5′ or less.

15.7.5.C Abutment Loading

15.7.5.C.1 *Earthquake Load*

EQ

For bearing pressure and abutment stability checks, the seismic inertial force of the abutment, P_{IR}, shall be combined with the seismic lateral earth pressure force, P_{AE}, as described in LRFD-BDS Section 11.6.5.1. For structural design of the abutment, the seismic inertial force, P_{IR}, shall be combined with the seismic lateral earth pressure force, P_{AE}, as described in LRFD-BDS Section 11.65.1 for stability checks.

15.7.5.C.2 *Bearing Forces*

TU

For strength design, the bearing shear forces shall be based on ½ of the annual temperature range.

15.7.5.D Abutment Details

15.7.5.D.1 *Bearing Seats*

The bearing seats shall have a minimum edge dimension of 3″ from the bearings shall and satisfy the requirements of LRFD-BDS Section 4.7.4.4. On L abutments, the bearing seat shall be sloped away from the bearings to prevent ponding at the bearings.

15.7.5.D.2 *Transverse Girder Stops*

All superstructures shall be restrained against lateral displacement at the abutments and intermediate expansion piers. All prestressed girder bridges in Western Washington (within and west of the Cascade mountain range) shall have girder stops between all girders at abutments and intermediate expansion piers. Girder stops shall be full width between girder flanges except to accommodate bearing replacement requirements as specified in Chapter 9. Girder stops are designed using a shear strength resistance factor shall be $\phi_s = 0.9$.

15.7.5.D.3 *Abutment Walls*

When construction joints are located in the middle of the abutment wall, a pour strip or an architectural reveal should be used for a clean appearance. LRFD-BDS Section 5.10.6 shall be followed for temperature and shrinkage reinforcement requirements near concrete surfaces exposed to daily temperature changes and in structural mass concrete. The minimum cross tie reinforcement in abutment walls shall be #4 tie bars with 135° hooks, spaced at approximately 2′-0″ center-to-center vertically and horizontally.

15.7.6 Abutment Wing Walls and Curtain Walls

Wall footing thickness shall not be less than 1'-6"

15.7.7 Footing Design

15.7.7.A General Footing Criteria

See Figure 7.7.1-1 for footing cover requirements. Footings supported on SE walls or geosynthetic walls shall have a minimum of 6″ of cover.

15.7.7.B Spread Footing Design

15.7.7.B.1 *Foundation Design*

1. Bearing Stress
   The maximum effective width for calculating uniform bearing stress is limited to *C+2D* as shown in Figure 7.7.4-3.

15.7.7.B.2 *Structural Design*

1. **Footing Thickness and Shear**
   The minimum footing thickness shall be 1′-0″. The minimum plan dimension shall be 4′-0″.

2. **Vertical Reinforcement**
   Vertical reinforcement shall be developed into the footing to adequately transfer loads to the footing. Vertical rebar shall be bent 90° and extend to the top of the bottom mat of footing reinforcement. Bars in tension shall be developed using 1.25 L_d. Bars in compression shall develop a length of 1.25 L_d, prior to the bend. Where bars are not fully stressed, lengths may be reduced in proportion, but shall not be less than ¾ L_d.

3. **Bottom Reinforcement**
   Reinforcement shall not be less than #6 bars at 12″ centers to account for uneven soil conditions and shrinkage stresses.

4. **Top Reinforcement**
   Top reinforcement for footings designed for two-way action shall not be less than #6 bars at 12″ centers, in each direction while top reinforcement for bearing wall designed for one-way action shall not be less than #5 bars at 12″ centers in each direction.

15.7.7.C Pile-Supported Footing Design

The minimum footing thickness shall be 2′-0″. The minimum plan dimension shall be 4′-0.

15.7.7.C.1 *Pile Embedment, Clearance, and Rebar Mat Location*

Cast-in-place concrete piles with reinforcing extending into footings are embedded a minimum of 6″. The clearance for the bottom mat of footing reinforcement shall be 1½″ between the reinforcing and the top of the pile for CIP pile footings. See Figure 7.7.5-2 for the minimum pile clearance to the edge of footing.

15.7.7.C.2 *Concrete Design*

In determining the proportion of pile load to be used for calculation of shear stress on the footing, any pile with its center 6″ or more outside the critical section shall be taken as fully acting on that section. Any pile with its center 6″ or more inside the critical section shall be taken as not acting for that section. For locations in between, the pile load acting shall be proportioned between these two extremes.

15.7.8 Shafts

15.7.8.A Axial Resistance

Axial Resistance Group Reduction Factors

The group reduction factors for axial resistance of shafts for the strength and extreme event limit states shall be taken as shown in Table 7.8.1-1. These reduction factors presume that good shaft installation practices are used to minimize or eliminate the relaxation of the soil between shafts and caving. If this cannot be adequately controlled due to difficult soils conditions or for other constructability reasons, lower group reduction factors shall be used as recommended by the Geotechnical Engineer of record. These group reduction factors apply to both strength and extreme event limit states. For the service limit state the influence of the group on settlement as required in the LRFD-BDS and the LRFD-SGS are still applicable.

1. Shafts with permanent casing, installed by drilling and not driven, require reduced side resistance specified by the Geotechnical Engineer. Side resistance shall be limited to 10 percent of the nominal (ultimate) side resistance unless otherwise approved by the WSDOT State Geotechnical Engineer.

15.7.8.B Structural Design and Detailing

1. For shaft foundation supporting columns in SDC C or D, the shaft nominal moment capacity shall be designed to resist 1.25 times the moment demand generated in the shaft by the overstrength column plastic hinge moment at the base of the column.
2. Concrete Class 5000P shall be specified for the entire length of the shaft for wet or dry conditions of placement.
3. When shafts are constructed in water, the concrete specified for the casing shoring seal shall be Class 4000W.
4. The assumed concrete compressive strength may be taken as $0.85f'_c$ for structural design of shafts. For seismic design, the expected compressive strength may be increased by 1.3 in accordance with AASHTO Seismic Section 8.4.4.
5. The presence of permanent steel casing shall be taken into account in the shaft design (i.e. for stiffness, and etc.), but the structural capacity of permanent steel casing shall not be considered for structural design of drilled shafts unless the design conforms to Section 15.7.10.
6. Minimum cover requirements shall be as specified below:
   - Diameter less than or equal to 3′-0″ = 3″
   - Diameter greater than 3′-0″ and less than 5′-0″ = 4″
   - Diameter greater than or equal to 5′-0″ = 6″

7. The clear spacing between spirals and hoops shall not be less than 6″ or more than 9″. The clear spacing between spirals or hoops may be reduced in the splice zone in single column/single shaft connections if the concrete is vibrated.
8. The volumetric ratio and spacing requirements of the LRFD-SGS for confinement need not be met.
9. #7 through #9 welded lap spliced hoops are acceptable to use provided they are not located in possible plastic hinge regions. Welded splices in hoops for shafts shall be completed prior to assembly of the shaft steel reinforcing cage. When hoops are used, the plans shall show a staggered splice pattern around the perimeter of the shaft so that no two adjacent splices are located at the same location.
10. In single column/single shaft configurations, the spacing of the shaft transverse reinforcement in the splice zone shall meet the requirements of the TRAC Report titled, "*Noncontact Lap Splices in Bridge Column-Shaft Connections*". The factor *k* represents the ratio of column tensile reinforcement to total column reinforcement at the nominal resistance. In the upper half of the splice zone, *k* shall be taken as 1.0. In the lower half of the splice zone, this ration could be determined from a column moment-curvature analysis.
11. Longitudinal reinforcement shall be provided for the full length of drilled shafts. The minimum longitudinal reinforcement in the splice zone of single column/single shaft connections shall be the larger of 0.75 percent A_g of the shaft or 1.0 percent A_g of the attached column. The minimum longitudinal reinforcement beyond the splice zone shall be 0.75 percent A_g of the shaft. The minimum longitudinal reinforcement in shafts without single column/single shaft connections shall be 0.75 percent A_g of the shaft.
12. The clear spacing between longitudinal reinforcement shall not be less than 6″ or more than 9″. If a shaft design is unable to meet this minimum requirement, a larger diameter shaft shall be considered.
13. Mechanical splices in longitudinal bars shall be placed in low stress regions and staggered 2′-0″ minimum.
14. Where undersized permanent slip casing is used, provide a minimum of concrete cover of 3″ for shafts with a diameter of 4′-0″ and larger and 1½″ for shafts with a diameter less than 4′-0″.
15. Reinforcing bar centralizers shall be detailed in the plans as shown in Section 7.8.2-4.

15.7.9 Piles and Piling

15.7.9.A Pile Types

Piles for new permanent bridges shall be CIP concrete piles, precast, prestressed concrete piles, structural steel pipe piles, structural steel H piles, CFSTs, or RCFSTs. Precast, prestressed concrete piles shall only be used in SDC A or B. Steel H piles shall only be used at bridge abutments, and the connections into the cap shall develop the strength required for design and to prevent pull out during uplift.

15.7.9.B Pile Groups

The minimum center-to-center spacing of piles shall be 30″ or 2.5 pile diameters.

15.7.9.C Battered Piles

Battered piles shall not be used to resist lateral loads for permanent bridge foundations.

15.7.9.D Structural Design and Detailing of CIP Concrete Piles

1. Concrete Class 5000P shall be specified for CIP concrete piles. The top 10′ of concrete in the pile shall be vibrated.
2. For structural design, the reinforcement alone shall be designed to resist the total moment throughout the length of pile without considering strength of the steel casing. The minimum reinforcement shall be 0.75 percent A_g for SDC B, C and D and shall be provided for the full length of the pile. Minimum clearance between longitudinal bars shall meet the requirements in Appendix 5.1-A2.
3. If the pile to footing/cap connection is not a plastic hinge zone longitudinal reinforcement need only extend above the pile into the footing/cap a distance equal to 1.0 l_d (tension). If the pile to footing/cap connection is a plastic hinge zone longitudinal reinforcement shall extend above the pile into the footing/cap a distance equal to 1.25 l_d.
4. Transverse spiral reinforcement shall be designed to resist the maximum shear in the pile. The minimum spiral shall be a #4 bar at 9″ pitch. If the pile to footing/cap connection is not a plastic hinge zone the volumetric requirements of LRFD-BDS Section 5.11.4.5 need not be met.

15.7.9.E Structural Steel Pipe Piles

Structural steel pipe piles shall follow the current Special Provisions in addition to the requirement in the *Standard Specifications*. Additionally, the design wall thickness shall be reduced for corrosion over a 75-year minimum design life. Minimum corrosion rates are specified in Section 6.7.1.

15.7.9.F Pile Resistance

The bridge plans shall include the Ultimate Bearing Capacity (Nominal Driving Resistance, R_{ndr}, for driven piles) in tons as shown in Figure 7.9.11-1.

15.7.10 Concrete-Filled Steel Tubes

15.7.10.A Design Requirements

Concrete-filled steel tubes (CFST), reinforced concrete-filled steel tubes (RCFST) and their connections shall be designed in accordance with Section 7.10. The use of CFST and RCFST requires approval from the WSDOT Bridge Design Engineer when used as a ductile element as part of an earthquake-resisting system. Additionally, the plastic hinge modeling parameters and methods must be approved by the WSDOT Bridge Design Engineer.

15.8 Walls and Buried Structures

15.8.1 Retaining Walls

15.8.1.A General

Refer to Section 8.1.3 for design criteria.

15.8.1.B Loads

Refer to Section 8.1.3 for design criteria.

15.8.1.C Design of Reinforced Concrete Retaining Walls

Refer to Section 8.1.4 for design criteria.

15.8.1.D Design of Cantilever Soldier Pile and Soldier Pile Tieback Walls

15.8.1.D.1 *Ground Anchors (Tiebacks)*

Refer to Section 5.1.5.A for design criteria.

15.8.1.D.2 *Design of Soldier Pile*

Refer to Section 8.1.5.B for design criteria.

15.8.1.D.3 *Design of Lagging*

Refer to Section 8.1.5.C for design criteria.

15.8.1.D.4 *Design of Fascia Panels*

Refer to Section 8.1.5D for design criteria.

Use of shotcrete in lieu of cast-in-place conventional concrete for the soldier pile fascia shall require the approval of the WSDOT State Bridge and Structures Engineer.

15.8.1.E Design of Structural Earth Walls

15.8.1.E.1 *Pre-approved Proprietary Structural Earth Walls*

Refer to Section 8.1.6 for design criteria.

15.8.1.F Design of Standard Plan Geosynthetic Walls

Details for construction are given in the *Standard Plans* Section D.

15.8.1.G Design of Soil Nail Walls

Refer to Section 8.1.8 for design criteria.

15.8.1.H Scour of Retaining Walls

Refer to Section 8.1.10 for design criteria.

15.8.1.I Miscellaneous Items

Refer to Section 8.1.11 for design criteria.

15.8.2 Noise Barrier Walls

15.8.2.A General

Refer to Section 8.2.1 for design criteria.

15.8.2.B Loads

Refer to Section 8.2.2 for design criteria.

15.8.2.C Design

15.8.2.C.1 *Standard Plan Noise Barrier Walls*

Refer to Section 8.2.3.A for design criteria.

15.8.2.C.2 *Non-Standard Noise Barrier Walls*

Refer to Section 8.2.3.B for design criteria.

15.8.3 Buried Structures

15.8.3.A General Policy

Cast-in-place or precast reinforced concrete, composite concrete filled arch, and metal structural plate are authorized materials for Buried Structures per Section 8.3.1.

If a Design-Builder intends to use alternate materials, other than reinforced concrete, composite concrete filled arch, or metal structural plate, they shall submit an Alternative Technical Concept.

All Buried Structures shall be designed for a minimum Service Life of 75 years.

The Structural Clear Span, Structure Class, and Fill Depth for Buried Structures shall be as defined in Section 8.3.1.

Buried Structures conveying vehicles, or pedestrians shall consider the applicability of safety systems in accordance with Section 8.3.8.

15.8.3.B General Design Requirements

The design of Buried Structures shall be in accordance with the requirements and guidance cited herein and in the current LRFD-BDS, LRFD-SGS, the WSDOT *Geotechnical Design Manual*, and *Standard Specifications*, unless otherwise required in the project-specific criteria.

Buried Structures shall be load rated in accordance with Section 13.

15.8.3.C Application of Loads

Buried Structures shall be designed for force effects in accordance with LRFD-BDS, Section 12.6.1, except exemption from seismic loading shall not apply, but rather, shall be applicable in accordance with Section 8.3.3.H.

Provisions for Live Load shall be in accordance with Section 8.3.3.B.1.

Headwalls, wingwalls, barriers, and railings shall be designed for vehicular collision and pedestrian, or worker fall protection forces where applicable in accordance with Section 10.2 and Section 10.5.

15.8.3.D Scour

Buried Structures, wingwalls, headwalls, and respective foundations shall be designed for the effects of scour as described in Section 7.1.7 and Section 8.1.10.

15.8.3.E Corrosion

Consideration shall be given to the degradation of Buried Structure materials resulting from corrosive conditions in accordance with Section 8.3.4.E.

15.8.3.F Worker, Pedestrian and Bicycle Fall Protection

For Buried Structures and associated headwalls and wingwalls, worker, pedestrian and bicycle fall protection shall be provided in accordance with Section 8.3.3.F.

15.8.3.G W-Beam Guardrail on Buried Structures (TL-3)

When Standard Plan C-20.41 or Standard Plan C-20.43 is attached to a Buried Structure, refer to Section 8.3.3.G for applicable design criteria.

15.8.3.H Deflection

Concrete Structures directly exposed to vehicular traffic (Fill Depth < 2.0 feet) as defined in Section 8.3.3.B.1, shall mitigate differential deflection between adjacent units in accordance with Section 8.3.5.A.2.

15.8.3.I Control of Cracking

Reinforcement provided in accordance with LRFD-BDS, Section 5.6.7 shall be based upon a Class 2 exposure condition.

15.8.3.J Joints

Joints shall be designed to carry the applied horizontal and vertical forces resulting from, but not limited to, differential settlement between segments, live load deflection, and shear transfer. Joints shall be so formed that they can be assembled to transmit those forces and provide joint tightness consistent with tolerances outlined in the Contract Documents. Each joint shall be sealed to prevent exfiltration or infiltration of soil fines and/or water.

15.8.3.K Deck Protection and Approach Slabs

When an HMA overlay is provided, a waterproofing membrane in accordance with *Standard Specifications* Section 6-08 shall be installed. If a 6.0-inch minimum Base or Top Course is placed between the Structure's top unit and HMA, the waterproofing membrane may be omitted.

Minimum concrete cover for an HMA overlay, or concrete topping shall be in accordance with Section 8.3.3.C.

Bridge approach slabs shall be provided in accordance with Section 10.6.

15.8.3.L Metal Structural Plate Structures

Design and construction of metal structural plate structures shall conform to the LRFD-BDS, Section 12, and the AASHTO LRFD *Bridge Construction Specifications*, Section 26.

Steel structural plate shall not be used in locations conforming to Marine or Non-Marine: Corrosive environments as defined in Section 6.7.1.

When required, reinforced concrete splash walls shall be provided in accordance with Section 8.3.6.C.

Minimum backfill cover, over the top and sides of the Structure shall be in accordance with the LRFD-BDS.

Where aluminum will contact concrete or grout, two coats of paint shall be applied to the aluminum at the contact surface in accordance with *Standard Specifications* Section 7-08.3(2)D.

15.8.3.M Design of Detention Vaults

Design of completely enclosed buried detention vaults shall not be permitted. Refer to Section 8.3.7 for design criteria specific to detention vaults.

15.8.3.N Design of Tunnels

Refer to Section 8.3.8 for design criteria specific to tunnels.

15.9 Bearings and Expansion Joints

15.9.1 Expansion Joints

15.9.1.A General Considerations

Bridges shall be designed to accommodate movements from all sources, including thermal fluctuations, concrete shrinkage, prestressing creep, and elastic post-tensioning shortening.

Where seismic isolation bearings are used, expansion joints shall be designed to accommodate seismic movements to allow the isolation bearings to function properly.

Expansion joints shall be designed to accommodate movement while minimizing imposition of secondary stresses in the structure. Expansion joint systems shall be sealed to prevent water, salt, and debris infiltration to substructure elements below. They shall also be designed to maximize durability while providing a relatively smooth riding surface.

Semi-integral construction shall be subject to the bridge length limitations stipulated below. In semi-integral construction, concrete end diaphragms are cast monolithically with the bridge deck. Girders are supported on elastomeric bearings, which are supported on a stub or cantilever abutment. Approach slab anchors, in conjunction with a compression seal, shall connect the monolithic end diaphragm to the bridge approach slab.

15.9.1.A.1 *Concrete Bridges*

Semi-integral construction shall be used for prestressed concrete girder bridges under 450 feet long and for post-tensioned spliced concrete girder and cast-in-place post-tensioned concrete box girder bridges under 400 feet long. Stub “L” and cantilever “L” type abutments with expansion joints at the bridge ends shall be used where bridge length exceeds these values.

15.9.1.A.2 *Steel Bridges*

“L” type abutments shall be used with expansion joints at the ends for multiple span bridges.

The use of intermediate expansion joints shall be avoided wherever possible.

For the purposes of this section, expansion joints are broadly classified into three categories based upon their total movement range as follows:

Small Movement Range Joints	Total Movement Range <= 1¾ inch
Medium Movement Range Joints	1¾ inch < Total Movement Range < 5 inch
Large Movement Range Joints	Total Movement Range >= 5 inch

15.9.1.B General Design Criteria

Expansion joints and bearings shall be designed interdependently and in conjunction with the anticipated behavior of the overall structure.

Shrinkage and uniform thermal variation movements shall be calculated as follows:

15.9.1.B.1 *Shrinkage Effects*

The shrinkage strain used for sizing expansion joints that are installed 30 to 60 days following concrete deck placement shall be no less than 0.0002. This value shall be corrected for restraint conditions imposed by various superstructure types as follows:

$$\Delta_{shrink} = \beta \times \mu \times L_{trib} \quad (9.1.2\text{-}1)$$

Where:

L_{trib} = Tributary length of the structure subject to shrinkage

β = Ultimate shrinkage strain after expansion joint installation; estimated as 0.0002 in lieu of more refined calculations

μ = Restraint factor accounting for the restraining effect imposed by superstructure elements installed before the concrete slab is cast 0.0 for steel girders, 0.5 for precast prestressed concrete girders, 0.8 for concrete box girders and T-beams, 1.0 for concrete flat slabs

15.9.1.B.2 *Thermal Effects*

Uniform thermal movement range shall be calculated using the maximum and minimum anticipated bridge superstructure average temperatures in accordance with LRFD-BDS Article 3.12.2.1 Procedure A. Most of western Washington shall be classified as a moderate climate. Eastern Washington and higher elevation areas of western Washington having more than 14 days per year with an average temperature below 32°F shall be classified as a cold climate. Factored thermal effects shall be calculated using the load factors stipulated in LRFD-BDS Article 3.4.

Total unfactored uniform thermal movement range shall be calculated as:

$$\Delta_{temp} = \alpha \times L_{trib} \times \delta T \quad (9.1.2\text{-}2)$$

Where:

L_{trib} = Tributary length of the structure subject to thermal variation

α = Coefficient of thermal expansion; 0.000006 in./in./°F for concrete and 0.0000065 in./in./°F for steel

δT Bridge superstructure average temperature range as a function of bridge type and climate as determined using AASHTO BDS Article 3.12.2.1 Procedure A

In accordance with *Standard Specifications* M 41-10, contract drawings shall state dimensions at a normal temperature of 64°F unless specifically noted otherwise. Construction and fabrication activities at structure average temperatures other than 64°F require the Contractor or fabricator to adjust lengths of structural elements and concrete forms accordingly.

Strip seal and modular expansion joint systems are typically installed in preformed concrete blockouts after the bridge deck concrete has been cast. In these instances, concrete shall be placed in the blockout with the expansion joint device set at a gap that corresponds to the temperature of the already constructed bridge deck at the time concrete is placed in the blockout. To accomplish this, expansion device gap settings shall be specified on the contract drawings as a function of superstructure ambient average temperature. Generally, these settings shall be specified for temperatures of 40°F, 64°F, and 80°F.

15.9.1.C Small Movement Range Joints

Elastomeric compression seals shall be used for all small movement range applications for new bridges. Elastomeric compression seals or poured silicone sealant may be used for rehabilitation of existing small movement range expansion joints and widenings.

15.9.1.C.1 *Compression Seals*

Compression seals shall be designed and installed to effectively seal a joint against all water and debris infiltration. Compression seals shall extend continuously across the full roadway width and up into traffic barriers. No field splices of compression seals are allowed.

Compression seals shall be installed against smooth, straight vertical concrete faces. Concrete surfaces may be either formed or sawcut. Polyester or elastomeric concrete nosing material shall be used for rehabilitation of existing compression seal joints in accordance with Section 15.9.1.3C below.

For design purposes, the minimum and maximum working widths of the seal shall be 40 percent and 85 percent of the uncompressed width. These measurements are taken perpendicular to the joint axis. Compressed seal width at the normal construction temperature of 64°F may be taken as 60 percent of the seal's uncompressed width. For skewed joints, bridge deck movements shall be separated into components perpendicular and parallel to the joint axis. Shear displacement of the seal over the full expected temperature range shall be limited to 22 percent of its uncompressed width.

15.9.1.C.2 *Rapid-Cure Silicone Sealants*

Rapid-cure silicone sealants may be installed against either concrete or steel. Concrete or steel substrate surfaces shall be thoroughly cleaned before the sealant is installed.

Rapid-cure silicone sealants shall be designed and installed based upon the manufacturer's recommendations.

15.9.1.C.3 *Asphaltic Plug Joints*

Asphaltic plug joints are not allowed.

15.9.1.C.4 *Headers*

Expansion joint headers for new construction shall be the same class structural concrete as used for the bridge deck and shall be cast integrally with the deck.

Expansion joint headers installed as part of a rehabilitative and/or overlay project shall be either polyester concrete or elastomeric concrete. Expansion joint headers shall be in accordance with General Special Provisions in the RFP Appendix.

Concrete headers shall be constructed on each side of an expansion joint when an HMA overlay is installed atop an existing concrete bridge deck.

For bridge overlays, modified concrete overlay (MCO) material may provide rigid side support for an elastomeric compression seal or a rapid cure silicone sealant bead without the need for separately constructed elastomeric concrete or polyester concrete headers. Such modified concrete overlay headers may utilize welded wire fabric as reinforcement.

15.9.1.D Medium Movement Range Joints

15.9.1.D.1 *Steel Sliding Plate Joints*

Steel sliding plates shall be limited to the following specific applications:

1. sidewalks and crosswalks
2. modular expansion joint upturns at traffic barriers
3. bridge deck applications involving unusual movements (translation and large rotations) not readily accommodated by modular expansion joints.

All applications subject to pedestrian traffic shall meet ADA requirements and shall include a non-skid surface. Non-pedestrian traffic applications shall be galvanized or painted to provide corrosion resistance.

15.9.1.D.2 *Strip Seal Joints*

An elastomeric strip seal expansion joint shall consist of a preformed elastomeric gland mechanically locked into steel edge rails embedded into the concrete deck on each side of an expansion joint gap. Unfolding of the elastomeric seal accommodates movement. Edge rails shall be anchored to the concrete deck. The system shall be designed and detailed to accommodate the replacement of damaged or worn seals with minimal traffic disruption.

Either a standard anchorage or a special anchorage may be used for a strip seal expansion joint. The special anchorage incorporates steel reinforcement bar loops welded to intermittent steel plates, which in turn are welded to the steel shape. The special anchorage shall be used for very high traffic volumes or applications subject to snowplow hits. In applications highly susceptible to snowplow hits and concomitant damage, the intermittent steel plates shall be detailed to protrude ¼″ above the bridge deck surface to launch the snowplow blade and prevent it from catching on the forward extrusion.

The standard anchorage requires a minimum 7-inch-deep block out. The special anchorage requires a minimum 9-inch-deep block out.

The use of preformed silicone strip seal systems, in lieu of conventionally armored strip seal systems, shall be restricted as noted in Section 9.1.4.B.

15.9.1.D.3 *Bolt-down Panel Joints*

Bolt-down panel joints are not allowed.

On bridge overlay and expansion joint rehabilitation projects, existing bolt-down panel joints shall be replaced with rapid-cure silicone sealant joints or strip seal expansion joints.

15.9.1.E Large Movement Range Joints

15.9.1.E.1 *Steel Finger Joints*

Steel finger joints may only be used where modular expansion joints are incapable of accommodating the movements or are otherwise not feasible. Elastomeric or metal troughs shall be installed beneath steel finger joints to catch and redirect runoff water.

The steel fingers shall be designed to support traffic loads with sufficient stiffness to preclude excessive vibration. In addition to longitudinal movement, finger joints shall accommodate rotation and differential vertical deflection across the joint. Finger joints shall be fabricated with a slight downward taper toward the ends of the fingers in order to minimize potential for snowplow blade damage.

15.9.1.E.2 *Modular Expansion Joints*

Modular expansion joints shall provide watertight wheel load transfer across expansion joint openings. Modular expansion joints are generally shipped in a completely assembled configuration. Modular expansion joints longer than 40 feet. may be shipped in segments to accommodate construction staging and/or shipping constraints.

1. **Operational Characteristics**

   Modular expansion joints shall comprise a series of steel center beams oriented parallel to the expansion joint axis. Elastomeric strip seals or box-type seals shall attach to adjacent center beams, preventing infiltration of water and debris. The center beams shall be supported on support bars, which span in the primary direction of anticipated movement. The support bars shall be supported on sliding bearings mounted within support boxes. Polytetrafluoroethylene (PTFE) - stainless steel interfaces shall be used between elastomeric support bearings and support bars.

   Modular expansion joint systems shall meet the fatigue resistance characterization requirements specified in the Special Provision for modular expansion joints at time of contract award.

   Center beam field splices shall be carefully designed and constructed to mitigate fatigue susceptibility in accordance with the Special Provisions.

2. **Movement Design**

   Modular expansion joints shall be sized to accommodate 115 percent of calculated total movement range. Contemporary modular expansion joints permit approximately 3 inches of service movement per elastomeric seal element. Extreme event movement ranges of up to 5 inches per elastomeric seal element are allowed provided that support bars and support boxes are sized and detailed to accommodate the larger cumulative movement without structurally damaging the modular expansion joint or detaching any elastomeric strip seal elements. To minimize impact and wear on bearing elements, the maximum gap between adjacent center beams shall be limited to 3½ inch.

   To facilitate the installation of a modular joint at temperatures other than the 64°F normal temperature, the plans shall specify expansion gap distances face-to-face of edge beams as a function of the superstructure temperature at the time of installation.

3. **Review of Shop Drawings and Structural Design Calculations**

   Modular expansion joints shall be designed, tested, fabricated, QA\QC inspected, and installed in accordance with the General Special Provision in the RFP Appendix, including submittal of design calculations, fatigue testing results, weld procedures, and shop drawings.

   The expansion joint system shall be designed to ensure complete concrete consolidation underneath all support boxes. A minimum vertical clearance of 2 inches shall be provided between the bottom of each support box and the top of the concrete block out. Alternatively, when vertical clearance is minimal, grout pads may be placed underneath support boxes before casting the concrete within the blockout.

4. **Construction Considerations**

   Temperature adjustment devices shall be removed as soon as possible after concrete placement in the block out.

15.9.2 Bearings

15.9.2.A General Considerations

Bearings and expansion joints shall be designed interdependently and in conjunction with the anticipated behavior of the overall structure.

15.9.2.B Force Considerations

Bridge bearings shall be designed to transfer all anticipated loads from the superstructure to the substructure. Bearing design calculations shall be based upon the relevant load combinations and load factors stipulated in the LRFD-BDS. Impact need not be applied to live load forces in the design of bearings.

15.9.2.C Movement Considerations

The movement restrictions imposed by a bearing shall be compatible with the movements allowed by an adjacent expansion joint. Both bearings and expansion joints shall be designed consistent with the anticipated load and deformation behavior of the overall structure. Design rotations shall be calculated as follows:

15.9.2.C.1 *Elastomeric and Fabric Pad Bearings*

The maximum service limit state rotation for bearings that do not have the potential to achieve hard contact between metal components shall be taken as the sum of unfactored dead and live load rotations plus an allowance for fabrication and construction uncertainties of 0.005 radians.

15.9.2.C.2 *HLMR Bearings*

High-load multi-rotational (HLMR) bearings include spherical bearings, disc bearings, cylindrical bearings and pot bearings.

Both service and strength limit state rotations shall be used in the design of HLMR bearings. These rotations shall be shown on the plans to allow the manufacturer to properly design and detail a bearing.

Deformable elements such as polyether urethane discs and PTFE shall be designed for service limit state loads and rotations. The service limit state rotation shall include an allowance for uncertainties of ±0.005 radians.

The maximum strength limit state rotation shall be used to assure that potential hard contact (metal-to-metal or metal-to-concrete) is prevented. For disc bearings, the strength limit state rotation shall include an allowance of ±0.005 radians for uncertainties. For other HLMR bearings the strength limit state rotation shall include an allowance of ±0.005 radians for fabrication and installation tolerances and an additional allowance of ±0.005 radians for uncertainties in accordance with the LRFD-BDS.

15.9.2.D Detailing Considerations

HLMR bearings shall be designed, detailed, fabricated, and installed to facilitate inspection, maintenance, and eventual replacement. Jacking points shall be identified in the contract drawings so that bearings can be reset, repaired, or replaced.

Prestressed concrete girder bridges having end Type A (semi - integral) need not be detailed to accommodate elastomeric bearing replacement at abutments. Prestressed concrete girder bridges having end Type B (L-type abutments) shall be designed and detailed to accommodate elastomeric bearing replacement at abutments. Specifically, girder stops and end diaphragms shall be detailed to accommodate the placement of hydraulic jacks. The standard end diaphragms for long-span girders may not have sufficient flexural and shear capacity to support jacking induced stresses. Sufficient steel reinforcement shall be provided to accommodate shear forces and bending moments induced by jacking. (Girder end Types A and B are depicted Chapter 5) Intermediate piers of prestressed concrete girder bridges having steel reinforced elastomeric bearings shall also be designed and detailed to facilitate bearing replacement.

15.9.2.E Bearing Types

15.9.2.E.1 *Elastomeric Bearings*

Steel reinforced elastomeric bearings shall be designed using the LRFD-BDS Method B procedure. Shear modulus shall be specified on the plans as 165 psi at 73˚ F without reference to durometer hardness.

Elastomeric bearings shall conform to the requirements of AASHTO M 251 - *Plain and Laminated Elastomeric Bridge Bearings*. Shims shall be fabricated from ASTM A 1011 Grade 36 steel unless noted otherwise on the plans. Bearings shall be laminated in ½-inch thick elastomeric layers with a minimum total thickness of 1 inch. For overall bearing heights less than 5 inches, a minimum of ¼ inch of side clearance shall be provided over the steel shims. For overall heights greater than 5 inches, a minimum of ½-inch of side clearance shall be provided. Live load compressive deflection shall be limited to 1/16-inch. Compressive dead load and live load shall be specified on the plans.

With respect to width, elastomeric bearings shall be designed and detailed as follows:

1. For prestressed concrete wide flange girders (WF36G to WF100G), the edge of the bearing pad shall be set between 1 inch minimum and 9 inch maximum inside of the edge of the girder bottom flange.
2. For prestressed concrete I-girders, bulb-tee girders, and deck bulb-tee girders, the edge of the bearing pad shall be set 1 inch inside of the edge of the girder bottom flange.
3. For all prestressed concrete tub girders, the edge of the bearing shall be set 1 inch inside of the edge of the bottom flange. Bearing pads for prestressed concrete tub girders shall be centered close to the centerline of each web.
4. For all prestressed concrete slabs one bearing pad and corresponding grout pad is required for each end of the prestressed concrete slab. The centerline of the bearing and grout pad shall coincide with the centerline of the prestressed concrete slab. The need for steel shims shall be assessed during the bearing design.

In order to facilitate compressive load testing, future bearing replacement, and vertical geometry coordination, the following table shall be included in the Plans:

Bearing Design Table	
Service I Limit State	
Dead load reaction	--------- kips
Live load reaction (w/o impact)	--------- kips
Unloaded height	--------- inches
Loaded height (*DL*)	--------- inches
Shear modulus at 73° F	--------- psi

In the construction of precast prestressed concrete girder and steel girder bridges, elastomeric bearings need not be offset to account for temperature variation during erection of the girders. Girders may be set atop elastomeric bearings at temperatures other than the mean of the temperature range. This shall be statistically reconciled by assuming a maximum thermal movement in either direction of:

$$\Delta_{temp} = 0.75 \cdot \alpha \cdot L \cdot (T_{MaxDesign} - T_{MinDesign})$$

where $T_{MaxDesign}$ is the maximum anticipated superstructure average temperature and $T_{MinDesign}$ is the minimum anticipated superstructure average temperature during the life of the bridge.

For precast prestressed concrete girder bridges, the maximum thermal movement, Δ_{temp}, shall be added to shrinkage and long-term creep movements to determine total bearing height required. The shrinkage movement for this bridge type shall be half that calculated for a cast-in-place concrete bridge.

15.9.2.E.2 *Fabric Pad Sliding Bearings*

Fabric pad sliding bearings incorporate fabric pads with a polytetrafluoroethylene (PTFE) - stainless steel sliding interface to permit large translational movements.

Unfilled PTFE shall be used for fabric pad sliding bearings.

Unfilled PTFE shall be recessed half its depth into a steel backing plate, which shall be bonded to the top of a fabric pad. The stainless steel sheet shall be seal welded to a steel sole plate attached to the superstructure.

1. **Fabric Pad Design**
   Maximum service load average bearing pressure for fabric pad bearing design shall be 1,200 psi. Maximum service load edge bearing pressure for fabric pad bearing design shall be 2,000 psi.

2. **PTFE – Stainless Steel Sliding Surface Design**
   PTFE having a maximum dimension less than or equal to 24 inches shall be at least 3⁄16-inch thick and recessed 3⁄32-inch into a minimum ½-inch thick steel plate that is bonded to the top of the fabric pad. PTFE having a maximum dimension greater than 24 inches shall be at least ¼ inch thick and shall be recessed ⅛-inch into a ½-inch thick steel plate that is bonded to the top of the fabric pad.

   Stainless steel sheet shall be finished to a No. 8 (Mirror) finish and shall be seal welded to the sole plate.

15.9.2.E.3 *Pin Bearings*

Steel pin bearings may be used to support heavy reactions with moderate to high levels of rotation about a single predetermined axis.

15.9.2.E.4 *Rocker and Roller Type Bearings*

Rocker bearings and steel roller bearings are not allowed for new bridges.

15.9.2.E.5 *Spherical Bearings*

Woven fabric PTFE shall be used on the curved surfaces of spherical bearings. When spherical bearings are detailed to accommodate translational movement, woven fabric PTFE shall be used on the flat sliding surface also. Woven fabric PTFE, which is mechanically interlocked over a metallic substrate, shall have a minimum thickness of 1/16-inch and a maximum thickness of 1/8-inch over the highest point of the substrate.

Spherical bearings shall be detailed with the concave surface oriented downward. Structural analysis of the overall structure shall recognize the center of rotation of the bearing not being coincident with the neutral axis of the girder above.

The contract drawings shall show the diameter and height of the spherical bearing in addition to all dead, live, and seismic loadings. Sole plate connections, base plate, anchor bolts, and any appurtenances for horizontal force transfer shall be detailed on the plans. The spherical bearing manufacturer shall submit shop drawings and detailed structural design calculations of spherical bearing components for review and comment by WSDOT.

15.9.2.E.6 *Disc Bearings*

Disc bearings composed of an annular shaped polyether urethane disk with a steel shear-resisting pin in the center may be used. A flat PTFE - stainless steel surface may be incorporated into the bearing to also provide translational movement capability.

15.9.2.E.7 *Seismic Isolation Bearings*

Seismic isolation bearings may be used, subject to the restrictions outlined in Sections 4.2.2 and 9.3. A cost-benefit analysis comparing Type 1 (ductile substructure) design vs. Type 3 (seismic isolation) design shall be performed and submitted for approval to the Bridge Design Engineer. This analysis shall, as a minimum, address the life cycle costs and other impacts identified in Section 9.3.2.

15.9.2.F Miscellaneous Details

15.9.2.F.1 *Temporary Support before Grouting Masonry Plate*

The masonry plate of an HLMR bearing shall be supported on a grout pad that is installed after the bearing and superstructure girders above have been erected. This sequence allows the Contractor to level and slightly adjust the horizontal location of the bearing before immobilizing it. Two methods for temporarily supporting the masonry plate are acceptable:

1. **Shim Packs**

   Multiple stacks of steel shim plates may be placed atop the concrete surface to temporarily support the weight of the girders on their bearings before grouting.

2. **Two-step Grouting with Cast Sleeves**

   A two-step grouting procedure with cast-in-place voided cores may be used for smaller HLMRs not generally subjected to uplift. Steel studs are welded to the underside of the masonry plate to coincide with the voided cores. With temporary shims installed between the top of the concrete surface and the underside of the masonry plate, the voided cores are fully grouted. Once the first stage grout has attained strength, the shims are removed, the masonry plate is dammed, and grout is placed between the top of the concrete surface and the underside of the masonry plate.

15.9.2.F.2 *Anchor Bolts*

Anchor bolts shall be designed to resist all horizontal shear forces and direct tension force due to uplift.

Anchor bolts shall be ASTM A 449 where strengths equal to ASTM A 325 are required and ASTM A 354, Grade BD, where strengths equal to ASTM A 490 are required. Anchor bolts shall be ASTM F 1554 bolts with supplemental Charpy test requirements in applications in which the bolts are subject to seismic loading.

15.9.2.G Contract Drawing Representation

High load multi-rotational bearings shall be depicted schematically in the contract drawings. Each bearing manufacturer has unique fabricating methods and procedures that allow it to fabricate a bearing most economically. Depicting the bearings schematically with loads and geometric requirements provides each manufacturer the flexibility to innovatively achieve optimal economy.

15.9.2.H Shop Drawing Review

High-load multi-rotational bearings shall be designed, tested, fabricated, QA/QC inspected, and installed in accordance with the Special Provisions in the RFP Appendix, including submittal of design calculations and shop drawings.

15.9.2.I Bearing Replacement Considerations

Bearings shall be designed and detailed to permit the replacement of all elements subject to wear. Superstructure and substructure elements shall be designed and detailed to accommodate lifting of the superstructure using hydraulic jacks to facilitate bearing element replacement.

For bearing replacements, the Design-Builder shall show anticipated lifting loads on the contract drawings. Limitations on lift height shall also be specified. Consideration shall be given to lift height as it relates to adjacent expansion joints elements and adjoining sections of railing. Restrictions on differential lift height between multiple jacks shall be specified to minimize stresses induced in adjacent structural elements.

Jacks shall be sized for 200 percent of the calculated lifting load.

15.10 Signs, Barriers, Bridge Approach Slabs, and Utilities

15.10.1 Sign and Luminaire Supports

The provisions of section 10.1 are applicable and shall be required.

15.10.2 Bridge Traffic Barriers

15.10.2.A General Guidelines and Policy

The provisions of section 10.2 are applicable and shall be required.

15.10.3 At Grade Concrete Barriers

The provisions of section 10.3 are applicable and shall be required.

15.10.3.A Traffic Barrier Moment Slab Design Criteria

15.10.3.A.1 *Structural Capacity*

The structural capacity of the traffic barrier moment slab shall be designed for the required TL impact forces in accordance with LRFD-BDS Chapters 5 and 13. The minimum Test Level shall be TL-4.

Any section along the moment slab shall not fail in shear, bending, or torsion when the barrier is subjected to the TL impact forces.

The moment slab reinforcement shall be designed to resist forces developed at the base of the barrier. Moment slab supporting concrete barrier shall be designed in accordance to Deck Overhang Design in accordance with LRFD-BDS Section A13.4 as modified by Section 10.2.4.A.

The torsion capacity of the moment slab shall be equal to or greater than the traffic barrier moment generated by the TL impact forces.

15.10.3.A.2 *Global Stability*

See Section 10.3.2.B.2.

15.10.3.A.3 *Geometry*

The minimum height of the traffic barrier portion of the moment slab shall be 42 inches above the finished roadway surface.

Moment slabs shall have a minimum width of 4.0 feet measured from the point of rotation to the heel of the slab and a minimum average depth of 0.83 feet.

15.10.3.A.4 *Soil Reinforcement*

Design of the soil reinforcement shall be in accordance with the *Geotechnical Design Manual* Chapter 15.

15.10.3.A.5 *Wall Panel*

The wall panels shall be designed to resist the dynamic pressure distributions as defined in the *Geotechnical Design Manual* Chapter 15.

The wall panel shall have sufficient structural capacity to resist the *maximum design rupture load for the wall reinforcement designed in accordance with the Geotechnical Design Manual* Chapter 15.

15.10.3.B Precast Concrete Barrier

Concrete barrier Type 2 and Type 4 shall be used in accordance to Section 10.3.4.

15.10.4 Bridge Traffic Barrier Rehabilitation

15.10.4.A General Guidelines and Policy

When identified in the RFP, deficient rails shall be improved or replaced within the limits of roadway resurfacing projects in accordance to Section 10.4.

Retrofit shall be an approved crash tested rail system or shall be designed to the strength requirements set forth by Section 2 of AASHTO *Standard Specifications for Highway Bridges*, 17th edition.

See Section 10.4.4 and WSDOT *Design Manual* for replacement criteria.

See Section 10.4.5 and 10.4.6 for available bridge rail retrofit and bridge rail replacement designs.

15.10.4.A.1 *Design Criteria*

1. **Structural Capacity**

   A strength and geometric review shall be required for all bridge rail rehabilitation projects. The AASHTO LFD load of 10 kips shall be used in the retrofit of existing traffic barrier systems constructed prior to the year 2000. No load less than 10 kips shall be applied, and the strength of the system shall be assessed in the pre and post retrofit condition. No reduction in structural capacity of greater than or equal to 10% is permitted.

   If the strength of the existing bridge rail and their supporting elements (i.e. deck) are unable to resist a 10 kip barrier impact design load or has not been crash tested, then modifications or replacement will be required to improve its redirectional characteristics and strength.

   If the design of the bridge rehabilitation includes other bridge components that will be designed using LRFD-BDS then the following minimum equivalent Extreme Event (CT) traffic barrier loading can be used limited to a maximum of <10% reduction:

   Flexure = (1.3)*(1.67)*(10 kip) / (0.9) = 24.10 kip

   Shear = (1.3)*(1.67)*(10 kip) / (0.85) = 25.54 kip

2. **Geometry**

   Standard thrie beam guardrail post spacing is 6′-3″ except for the SL-1 Weak Post, which is at 8′-4″. Post spacing can be increased up to 10′-0″ if the thrie beam guardrail is nested (doubled up).

   Guardrail shall be continuous without gaps.

   Design F guardrail end sections shall be used at the approach and trailing end of these gaps.

   Standard Plan thrie beam guardrail transitions shall be used at each corner of the bridge.

   Placement of the retrofit system will be determined from the WSDOT *Design Manual*.

15.10.5 Bridge Railing

15.10.5.A General Guidelines and Policy

Pedestrian and bicycle/pedestrian railings shall be designed in accordance with LRFD-BDS Chapter 13 with the following supplemental guidelines.

Railings shall be designed for vehicular impact load or be successfully crash tested unless location is low speed, location is outside of Design Clear Zone as defined in *Design Manual* Chapter 1600, or location has minimal safety consequence from collapse of railing.

Minimum height of 54″ shall be provided for bicycle railings on structures.

Fall Protection railing shall meet the requirements of WAC 296-880 and as described in the *Design Manual* Chapter 1060.

See Section 10.5.2 for available bridge railing designs.

15.10.6 Bridge Approach Slabs

Bridge approach slabs are required for the following structures:

- New bridges
- Widened bridges (full roadway width)
- Class 1 and Class 2 Buried Structures without a full roadways section (including HMA and CSBC) within 25 feet of each end of the buried structure

Bridge runoff at the abutments shall be carried off and collected at least 10 feet beyond the bridge approach slab.

15.10.6.A Bridge Approach Slab Design Criteria

The standard bridge approach slab design is based on the following criteria:

1. The bridge approach slab is designed as a slab in accordance with LRFD-BDS. (Strength Limit State, IM = 1.33, no skew).
2. The support at the roadway end is assumed to be a uniform soil reaction with a bearing length that is approximately ⅓ the length of the approach slab, or 25′/3 = 8′.
3. The Effective Span Length (Seff), regardless of approach length, is assumed to be:

   25′ approach – 8′ = 17′.

4. Longitudinal reinforcing bars do not require modification for skewed approaches up to 30 degrees or for slab lengths greater than 25′.
5. The bridge approach slab is designed with a 2″ concrete cover to the bottom reinforcing.

15.10.6.B Bridge Approach Slab Detailing

The minimum dimension from the bridge is 25′.

AS1 bars shall be epoxy coated. Bending diagrams shall be shown for all custom reinforcement. All Bridge Approach Slab sheets will have the AP2 and AP7 bars. If there is a traffic barrier, then AP8, AS1, and AS2 bars shall be shown.

Longitudinal contraction joints are required on bridge approach slabs wider than 40 feet or where steps are used on skewed alignments. Joints shall be located at lane lines or median barrier and in accordance with Bridge Standard Drawing 10.6-A1-2.

15.10.6.C Skewed Bridge Approach Slabs

For all skewed abutments, the roadway end of the bridge approach slab shall be normal to the roadway centerline. Skews greater than 20-degrees require analysis to verify the bottom mat reinforcement, and may require expansion joint modifications.

The roadway end of the approach may be stepped to reduce the size or to accommodate staging construction widths. At no point shall the roadway end of the approach slab be closer than 25′ to the bridge. These criteria apply to both new and existing bridge approach slabs. If stepped, the design shall provide the absolute minimum number of steps and the longitudinal construction joint shall be located on a lane line. See Figure 10.6.4-1 for clarification.

In addition, for bridges with traffic barriers and skews greater than 20 degrees, the AP8 bars shall be rotated in the acute corners of the bridge approach slabs. Typical placement is shown in the flared corner steel detail, see Figure 10.6.4-2.

15.10.6.D Approach Anchors and Expansion Joints

For semi-integral abutments or stub abutments, the joint design shall be checked to ensure the available movement of the standard joint is not exceeded. For bridge approach slabs with barrier, the compression seal shall extend into the barrier.

L Type Abutments

Use a pinned connection in accordance with Section 10.6.5.

15.10.6.E Bridge Approach Slab Addition or Retrofit to Existing Bridges

Bridge approach slabs on existing bridges shall be pinned to the existing pavement seat, or attached with approach anchors.

The pinning option is only allowed on semi-integral abutments as a bridge approach slab addition or retrofit to an existing bridge. Figure 10.6.6-1 shows the pinning detail. As this detail eliminates the expansion joint between the bridge approach slab and the bridge, the maximum bridge superstructure length is limited to 150′. Additionally, if the roadway end of the bridge approach slab is adjacent to PCCP roadway, then the detail shown in Figure 10.6.6-2 applies. PCCP does not allow for as much movement as HMA and a joint is required to reduce the possibility of buckling.

When pinning is not applicable, then the bridge approach slab shall be attached to the bridge with approach anchors. If the existing pavement seat is less than 10 inches, the seat shall be modified to provide at least 10 inches of seat width.

When a bridge approach slab is added to an existing bridge, the final grade of the bridge approach slab concrete shall match the existing grade of the concrete bridge deck, including bridges with asphalt pavement. The existing depth of asphalt on the bridge shall be shown in the Plans and an equal depth of asphalt placed on a new bridge approach slab. If the existing depth of asphalt is increased or decreased, the final grade shall also be shown on the Plans.

15.10.6.F Bridge Approach Slab Staging

Ensure staging follows traffic control.

Add mechanical splice option as shown in Figure 10.6.6-3 when needed.

15.10.7 Traffic Barrier on Bridge Approach Slabs

A gap between the bridge approach slab and wingwall (or retaining wall) shall be shown in the details. The minimum gap is twice the long-term settlement, or 2 inches as shown in Figure 10.7-1.

When the traffic barrier is placed on the bridge approach slab,

- Barrier shall extend to the end of the bridge approach slab
- Conduit deflection or expansion fittings shall be called out at the joints
- Junction box locations shall start and end in the approach
- The transverse top reinforcing in the slab shall be sufficient to resist a traffic barrier impact load.

15.10.7.A Bridge Approach Slab over Wing Walls, Cantilever Walls or Geosynthetic Walls

All walls that are cast-in-place below the bridge approach slab shall continue the barrier soffit line to grade as shown in Figure 10.7.1-1.

15.10.7.B Bridge Approach Slab over SE Walls

The barrier soffit line shall match that for the SEW barrier starting at the bridge expansion joint as shown in Figures 10.7.2-1 and 10.7.2-2.

15.10.8 Utilities Installation on New and Existing Structures

15.10.8.A General Concepts

The utilities included under this section are those described in *Standard Specifications* Section 6-01.10. Bridge plans shall include all hardware specifications and details for the utility attachment as described in the RFP.

15.10.8.A.1 *Coating and Corrosion Protection*

When the bridge is to receive pigmented sealer, any exposed utility lines and hangers shall be painted to match the bridge. When a pigmented sealer is not required, steel utility conduits and hangers shall be painted or galvanized for corrosion protection. The RFP Criteria shall specify cleaning and painting procedures.

15.10.8.B Utility Design Criteria

All utilities shall be designed to resist Strength and Extreme Event Limits States. Utility support design calculations shall be stamped with a State of Washington Professional Engineer stamp, signed and dated.

Positive resistance to loads shall be provided in all directions perpendicular to and along the length of the utility as required by the utility engineer.

Dynamic fluid action due to loads shall be resisted off the bridge.

Where utilities are insulated, the insulation system shall be designed to allow the intended motion range of the hardware supporting the utility.

Conduit shall be rigid.

15.10.8.B.1 *Utility Location*

Utilities shall be located, such that a failure will not result in damage to the bridge, the surrounding area, or be a hazard to traffic. The utility shall be installed between girders. Utilities and supports shall not extend below the bottom of the superstructure. Utilities shall be installed no lower than 1 foot 0 inches above the bottom of the girders. Utilities shall not be attached above the bridge deck nor attached to the railings or posts.

15.10.8.B.2 *Termination at the Bridge Ends*

Utility conduit and encasements shall extend 10 feet minimum beyond the ends of the structure. Utilities off the bridge shall be installed prior to paving of approaches.

15.10.8.B.3 *Utility Expansion*

The utilities shall be designed with a suitable expansion system as required to prevent longitudinal forces from being transferred to bridge members.

15.10.8.B.4 *Utility Blockouts*

Blockouts shall be provided in all structural members that prohibit the passage of utilities, such as girder end diaphragms, pier crossbeams, and intermediate diaphragms. These blockouts shall be large enough to fit deflection fittings, and shall be parallel to the utility. For multiple utilities, a note shall be added to the plans that the deflection fittings shall be staggered such that no fitting is located adjacent to another, or the blockouts shall be designed to fit both fittings. Expansion fittings shall be staggered.

15.10.8.B.5 *Gas Lines or Volatile Fluids*

Pipelines carrying volatile fluids through a bridge superstructure shall be designed in accordance with WAC 480-93, *Gas Companies—Safety, and Minimum Federal Safety Standard*, Title 49 Code of Federal Regulations (CFR) Section part 192. WAC 468-34-210, *Pipelines - Encasement*, describes when casing is required for carrying volatile fluids across structures.

15.10.8.B.6 *Water Lines*

Transverse support or bracing shall be provided for all water lines to carry Strength and Extreme Event Lateral Loading. In box girders (closed cell), a rupture of a water line will generally flood a cell before emergency response can shut down the water main. This shall be designed for as an Extreme Event II load case, where the weight of water is a dead

load (DC). Additional weep holes or open grating, or full length casing extending 10-feet beyond the end of the bridge approach slab shall be used to offset this Extreme Event (see Figure 10.8.3-1).

15.10.8.B.7 *Sewer Lines*

Sewer lines shall meet the same design criteria as waterlines. Encasement pipe is required for sewer lines on bridges that cross over water or roads.

15.10.8.B.8 *Electrical (Power and Communications)*

Telephone, television cable, and power conduit shall be galvanized Rigid Metal Conduit (RGS) or Rigid Polyvinyl Chloride Conduit (PVC). Where such conduit is buried in concrete curbs or barriers or has continuous support, such support is considered to be adequate. Where hangers or brackets support conduit at intervals, the maximum distance between supports shall be in accordance with Section 10.8.6.

15.10.8.C Box/Tub Girder Bridges

Utilities shall be located between girders or under the bridge deck soffit when the reinforced concrete box or tub girders are less than 4 feet inside clear height.

Special utilities (such as water or gas mains) in box girder bridges shall use concrete pedestals. Continuous supports shall not be used.

15.10.8.D Traffic Barrier Conduit

All new bridge construction shall install two 2-inch galvanized Rigid Metal Conduit (RGS) or Rigid Polyvinyl Chloride Conduit (PVC) in the traffic barriers. PVC conduit may be used only in stationary-form barriers, and will connect to RGS using a PVC adaptor when exiting the barrier. RGS conduit may be used in stationary-form barriers, but it shall be used in slipform barriers.

Each conduit shall be stubbed-out into its own concrete junction box at each corner of the bridge.

The galvanized steel conduit shall be wrapped with corrosion resistant tape at least one foot inside and outside of the concrete structure, and this requirement shall be so stated on the plans. The corrosion resistant tape shall be 3M Scotch 50, Bishop 5, Nashua AVI 10, or approved equal.

Pull boxes shall be provided within the barrier for each conduit at each end of the bridge and at a maximum spacing of 200 feet. For fiber optics only, spacing shall not exceed 360 feet. The pull box size shall conform to the specifications of the National Electric Code or be a minimum of 8 inches by 8 inches by 18 inches to facilitate pulling of wires. Galvanized steel pull boxes (or junctions boxes) shall meet the specifications of the "NEMA Type 4X" standard for stationary-form barrier, shall meet the specifications of the "NEMA 3R" and be adjustable in depth for slip form barrier, and the NEMA junction box type shall be stated on the plans. Stainless steel pull boxes may be used as an option to the galvanized steel.

In the case of existing bridges, an area 2 feet in width shall be reserved for conduit beginning at a point either 4 feet or 6 feet outside the face of usable shoulder.

15.10.8.E Conduit Types

All electrical conduits shall be galvanized Rigid Metal Conduit (RGS) or Rigid Polyvinyl Chloride Conduit (PVC).

15.10.8.F Utility Supports

All utility installations shall address temperature expansion in the design of the system or expansion devices.

Utility supports shall be designed so that any loads imposed by the utility installation do not overstress the conduit, supports, bridge structure, or bridge members.

Designs shall provide longitudinal and transverse support for loads from gravity, earthquakes, temperature, inertia, etc.

Vertical supports shall be spaced at 5 foot maximum intervals for telephone and power conduits, and at a spacing to resist design loads for all other utilities. For Schedule 40 steel conduit, 4" or greater, support spacing may be increased to 8 feet maximum if the design loads permit.

Drilling into prestressed concrete members for utility attachment shall not be allowed.

15.10.8.F.1 *Pipe Hangers*

For heavy pipes over traffic (10″ water main or larger), a Safety Factor of 1.5 shall be used to resist vertical loads for Strength design.

The cast-in-place insert shall be at least 6″ long and hot dipped galvanized in accordance with AASHTO M 111 or AASHTO M 232.

The insert shall not interfere with reinforcement in the bridge deck. The inserts shall be installed level longitudinally and transversely.

Transverse supports shall, at a minimum, be located at every other vertical support. Bridge Standard Drawings 10.8-A1-1 and 10.8-A1-2 depict typical utility support installations and placement at abutments and diaphragms.

15.10.8.F.2 *Surface Mounting*

Utilities to be installed on existing structures that cannot be located between girders may be mounted under the deck soffit. Adhesive anchor shall be design in accordance with Section 10.10.

Bridge Standard Drawing 10.8-A1-3 shows typical mounting locations for concrete beam of box girder bridges. Anchors shall be located 3" minimum from the edge of deck or other concrete surfaces.

15.10.9 Review Procedure for Utility Installations on Existing Structures

Utility installations on existing bridges shall be reviewed in accordance with Section 10.9.

15.10.10 Anchors for Permanent Attachments

The design procedure for cast-in-place and post-installed anchors shall be in accordance with LRFD-BDS 5.13. Adhesive and undercut anchors shall meet the assessment criteria in accordance with ACI 355.4 and ACI 355.2, respectively.

Fast set epoxy anchors shall not be used for adhesive anchors.

Undercut anchors shall be stainless steel.

15.10.11 Drainage Design

All drainage system expansion joints shall be watertight.

15.10.11.A Geometrics

Bridges shall have a minimum transverse slope of .02′/feet and a minimum longitudinal slope of 0.5 percent.

15.10.11.B Hydrology

Hydrological calculations are made using the rational equation. A 10 year storm event with a 5 minute duration is the intensity used for all inlets except for sag vertical curves where a 50 year storm intensity is required.

15.10.11.C On Bridge Systems

Drains shall only be placed on bridge structures when required by bridge deck drainage hydraulics analysis and where alignment and superelevation geometry cannot be adjusted to compensate. The minimum pipe diameter shall be 6 inches with no bends greater than 45° within the system.

15.11 Detailing Practices

Structural detailing shall meet the requirements of this section. For best practices, examples and figures, refer to Chapter 11 of the *Bridge Design Manual (LRFD)* M 23-50.20.

15.11.1 Standard Practices

15.11.1.A Drawing Orientation and Layout Control

- Contract plans shall be printed, sealed, signed and submitted on 11″ × 17″ paper. Alternatively, the Contract plans may be submitted in an electronic format accepted by WSDOT encrypted with a valid electronic signature.
- Drawings shall be organized so the intent of the drawing is easily understood.

1. North arrow shall be placed on layouts and footing/foundation layouts.
2. Related details shall be grouped together in an orderly arrangement, lined up horizontally and vertically and drawn to the same scale.
3. The Plan view layout of structures shall be oriented from left to right in the direction of increasing state route mileposts. For layouts of existing bridges undergoing widening, expansion joint or thrie beam retrofit, or other structural modification, this orientation requirement may result in the bridge layout being opposite from what is shown in the original plans. In such cases, the bridge layout orientation and pier identification shall be laid out to be consistent with the WSDOT Bridge Preservation Office inspection records.
4. Except for the Layout, wall elevations are to show the exposed face regardless of direction of stationing. The Layout sheet stationing shall read increasing left to right. The elevation sheets shall represent the view in the field as the wall is being built.

15.11.1.B Lettering

15.11.1.B.1 *General*

1. Lettering shall be upper case only, slanted at approximately 68 degrees. General text is to be approximately ⅛″ high.
2. Text shall be oriented so as to be read from the bottom or right edge of the sheet.
3. Detail titles shall be a similar font as general text, about twice as high and of a heavier weight. They shall be underlined with a single line having the same weight as the lettering.

15.11.1.B.2 *Dimensioning*

1. A dimension shall be shown once on a drawing. Duplication and unnecessary dimensions shall be avoided.
2. All dimension figures shall be placed above the dimension line, so that they may be read from the bottom or the right edge of the sheet.
3. When details or structural elements are complex, utilize two drawings, one for dimensions and the other for reinforcing bar details.
4. Dimensions 12 inches or more shall be given in feet and inches unless the item dimensioned is conventionally designated in inches (for example, 16″ø pipe).

5. Dimensions that are less than one inch over an even foot, the fraction shall be preceded by a zero (for example, 3′-0¾″).
6. Dimensions shall be placed outside the view, preferably to the right or below. However, in the interest of clarity and simplicity it may be necessary to place them otherwise.

15.11.1.C Line Work

1. All line work shall be of sufficient size, weight, and clarity so that it can be easily read on a 11″ × 17″ sheet.
2. The line style used for a particular structural outline, centerline, etc., shall be kept consistent wherever that line is shown within a set of plans.
3. Line work shall have appropriate gradations of width to give line contrast. Care shall be taken that the thin lines are dense enough to show clearly when reproduced.
4. When drawing structural sections showing reinforcing steel, the outline of the sections shall be a heavier line weight than the reinforcement steel.
5. The order of line precedence (which of a pair of crossing lines is broken) shall be as follows:
   A. Dimension lines are never broken.
   B. Leader line from a callout.
   C. Extension line.

15.11.1.D Scale

1. CAD Sheet Models shall be configured using standard architectural or engineering scales for referencing. All details shall be accurately represented at scale. Scales shall not be shown in the plans.
2. The minimum scale for a section detail with rebar shall be ⅜″ = 1′. The minimum scale to be used on steel details shall be ¾″ = 1′.

15.11.1.E Graphic Symbols

Graphic symbols shall be in accordance with the following:

1. Structural steel shapes: See the *AISC Steel Construction Manual*.
2. Welding symbols: See the *Lincoln Welding Chart*.
3. Symbols for hatching different materials are shown on Appendix 11.2-A2.

15.11.1.F Structural Sections, Views and Details

1. Whenever possible, sections and views shall be taken looking to the right, ahead on stationing, or down.
2. The orientation of a detail drawing shall be identical to that of the plan, elevation, etc., from which it is taken. Where there is a skew in the bridge any sections shall be taken from plan views.
3. The default view orientation is to be looking ahead on stationing. Other orientations shall be noted.

4. A circle divided into upper and lower halves shall identify structural sections, views, and details. Examples are shown in Appendix 11.2-A3.
5. Breaks in lines are allowable provided that their intent is clear.

15.11.1.G Miscellaneous

1. Callout arrows shall come off either the beginning or end of the sentence. This means the top line of text for arrows coming off the left of the callout or the bottom line of text for arrows pointing right.
2. Key notes shall be used to cover sheet specific notes and callouts in accordance with BDM Section 11.1.1.D.4.
3. Key note flags shall be used to reference key notes within the drawing area. Each note flag will use the same symbol and corresponding number as found in the key notes.
4. Key note flags shall be an elongated hexagon that is ¼" in height and ½" in length with each corner chamfered at 45° tapering to a single point at each end. The number shall be centered horizontally and vertically within.
5. A Key note flag legend symbol shall be placed as part of the primary legend found typically on the first sheet of a plan set as this is a continuous standard found throughout the set in the same way a section or detail callout is.

15.11.1.H RFC Revisions

1. Changes made to Released For Construction (RFC) plan sheets shall be clouded with the exception of table entries which shall be shaded in accordance with the *Plans Preparation Manual* Appendix 5. Subsequent changes shall be clouded or shaded and the clouding and shading from previous changes shall be removed.
2. Changes shall be marked with a number in a circle in a triangle.
3. Changes shall be noted in the revision block at the bottom of the sheet using Lucida Console font 12pt.

15.11.1.I Title Block

1. The project title shall be displayed in the plan sheet title block. The title consists of Line 1 specifying the highway route number(s), Line 2 and possibly Line 3 specifying the title verbiage. Bridge structures shall have a fourth line, in a smaller font, to specify the bridge name and number in accordance with the *Bridge List* M 23-09 and Sections 2.3.1.A and 2.3.2.A.
2. The highway route number(s) in Line 1 shall be consistent with WSDOT naming practice. Interstate routes (5, 82, 90, 182, 205, 405, and 705) shall be specified as I-(number). US routes (2, 12, 97, 97A, 101, 195, 197, 395, and 730) shall be specified as US (number). All other routes shall be specified as SR (number). Projects including two highway routes shall include both route numbers in Line 1, as in "US 2 And I-5". Projects including three or more highway routes shall be specified with the lowest numbered route, followed by "Et Al", as in "SR 14 Et Al".

15.11.1.J Reinforcement Detailing

1. Contract documents shall convey all necessary information for fabrication of reinforcing steel. In accordance with *Standard Specifications* Section 6-02.3(24), reinforcing steel details shown in the bar list shall be verifiable in the plans and other contract documents.
2. Size, spacing, orientation and location of reinforcement shall be shown on the plan sheets.
3. Reinforcement shall be identified by mark numbers inside a rectangle. Reinforcing bar marks shall be called out at least twice. The reinforcement including the spacing is called out in one view (such as a plan or elevation). The reinforcement without the spacing is called out again in at least one other view taken from a different angle (such as a section).
4. Epoxy coating for reinforcement shall be shown in the plans by noting an E inside a triangle.
5. The spacing for reinforcement shall be on a dimension line with extension lines. Do not point to a single bar and call out the spacing. Reinforcement spacing callouts shall include a distance. If the distance is an unusual number, give a maximum spacing. Do not use "equal spaces" as in "23 equal spaces = 18′-9″. Also, never use the word "about" as in 23 spaces @ about 10″ = 18′-9″. Instead these should read "23 spaces @ 10″ max. = 18′-9″.
6. Reinforcement geometry shall be clear in plan details. Congested areas, oddly bent bars, etc. can be clarified with additional views/details/sections or adjacent bending diagrams. In bending diagrams, reinforcement dimensions shall be given out-to-out. It may be necessary to show edges of reinforcement with two parallel edge lines to clearly show working points and dimensions.
7. Reinforcement lengths, angles, etc. need not be called out when they can be determined from structural member sizes, cover requirements, etc. Anchorage, embedment and extension lengths of reinforcement shall be dimensioned in the plans.
8. Standard hooks in accordance with LRFD-BDS Section 5.10.2.1 need not be dimensioned or called out, but shall be drawn with the proper angle (90°, 135° or 180°). Seismic hooks per LRFD-BDS Section 5.10.2.2 (used for transverse reinforcement in regions of expected plastic hinges) shall be called out on the plans whenever they are used.
9. The location, length and stagger of lap splices shall be shown on the plan sheets. Tables of applicable lap splice lengths are acceptable with associated stagger requirements. Type, location and stagger of mechanical and welded splices of reinforcement shall be shown.
10. Where concrete cover requirements differ from those given in the standard notes or *Standard Specifications* Section 6-02.3(24)C, they shall be shown in the plans. It shall be clear whether the cover requirement refers to ties and stirrups or the main longitudinal bars.

15.11.2 Bridge Office Standard Drawings and Office Examples

15.11.2.A General

The Bridge and Structures Office provides standard drawings and example sheets of various common bridge elements.

These drawings are found in dwg and pdf formats under Engineering Standards on the WSDOT website (Design topics | WSDOT (wa.gov)).

15.11.2.B Use of Standards

The WSDOT Bridge Standard Drawings are to be considered as nothing more than examples of items like girders or traffic barriers which are often used and are very similar from job to job.

The drawings shall be **modified to fit** the particular aspects of the structure. They shall not be included in a contract plan set without close scrutiny for applicability to the job and verification of all design loads and requirements by the design consultant.

WSDOT is not responsible for any discrepancies, errors, and omissions in these Standard Design Drawings.

15.11.3 Plan Sheets

Plan sheets shall be assembled in the order of construction and shall include the items listed below.

- Layout
- General Notes/Construction Sequence
- Footing/Foundation Layout
- Piles/Shafts
- Abutments
- Intermediate Piers/Bents
- Bearing Details
- Framing Plan
- Typical Section
- Girders/Diaphragms
- Bridge Deck Reinforcement (Plan and transverse section)
- Expansion Joints (if needed)
- Traffic Barrier
- Bridge Approach Slab

15.11.3.A Layout

- The Layout sheet shall contain, but is not limited to:
  - Plan View with ascending stations from left to right
  - Elevation View shown as an outside view of the bridge and shall be visually aligned with the plan view.
- Alignment lines, vertical curves and roadway superelevation diagrams.
  - Test hole locations (designated by 3/16 inch circles, quartered) to plan view.
  - Elevation view of footings, seals, piles, etc. Show elevation at Bottom of footing and, if applicable, the type and size of piling.
  - General notes above legend on right hand side, usually in place of the typical section.
  - Title “LAYOUT” in the title block and sheet number in the space provided.
  - Other features, such as lighting, conduit, signs, excavation, riprap, etc. as determined by the designer.

15.11.3.B General Notes/Construction Sequence

- The general notes sheet shall contain, but is not limited to those shown in Section 11.1.3

15.11.3.C Footing Layout

- An abutment with a spread footing has a Footing Layout. An abutment with piles and pile cap has a Foundation Layout.
- The Footing Layout is a plan of the bridge whose details are limited to those needed to locate the footings. The intent of the footing layout is to minimize the possibility of error at this initial stage of construction.
- The Foundation Layout is a plan of the bridge whose details are limited to those needed to locate the shafts or piles. The intent of the Foundation layout is to minimize the possibility of error at this initial stage of construction.
- Other related information and/or details such as pedestal sizes, and column sizes are considered part of the pier drawing and should not be included in the footing layout.
- The Footing Layout should be shown on the layout sheet if space allows. It need not be in the same scale. When the general notes and footing layout cannot be included on the first (layout) sheet, the footing layout should be included on the second sheet.
- Longitudinally, footings should be located using the survey line to reference such items as the footing, centerline pier, centerline column, or centerline bearing, etc.
- When seals are required, their locations and sizes should be clearly indicated on the footing layout.
- The Wall Foundation Plan for retaining walls is similar to the Footing Plan for bridges except that it also shows dimensions to the front face of wall.
- Appendix 11.1-A4 is an example of a footing layout showing:
  - The basic information needed.
  - The method of detailing from the survey line.

15.11.3.D Piles/Shafts

- Pile and shaft details will be associated with a Foundation Layout or a Footing Layout (if the footing is to have piles below, acting as a pile cap more so than a spread footing).
- These detail sheets will come immediately after the Foundation Layout or Footing Layout if they are to be used to support an Abutment or directly after the abutment sheets if used to support Intermediate Piers.

15.11.3.E Abutment

- Abutment piers shall be detailed separately due to the elevation views being opposite directions in relation to stationing. This will mitigate any chance for confusion in the field due to asymmetrical profiles or grades, and any differences in skew.
- Bridge elements that have not yet been built will not be shown. For example, the superstructure is not to be shown, dashed or not, on any substructure details.
- Elevation information for seals and piles or shafts may be shown on the abutment or pier sheets.

- Views are to be oriented so that they represent what the contractor or inspector would most likely see on the ground. Pier 1 elevation is often shown looking back on stationing. A note should be added under the Elevation Pier 1 title saying "Shown looking back on stationing".

15.11.3.F Intermediate Piers/Bents

- Each pier shall be detailed separately as a general rule. If the intermediate piers are identical except for height, then they can be shown together.

15.11.3.G Bearing Details

15.11.3.H Framing Plan

- Girder Lines must be identified in the plan view (Gir. A, Gir. B, etc.).
- For adjacent deck girder bridges, such as slab girders and wide flange thin deck girders, the framing plan shall be based on the girder centerline or centerline work point rather than the gap width between adjacent girders.

15.11.3.I Typical Section

- Girder spacing, which is tied to the bridge construction baseline
- Bridge deck thickness, as well as web and bottom slab thicknesses for box girders
- "A" dimension
- Limits of pigmented sealer
- Profile grade and pivot point and cross slopes
- Utility locations
- Curb to curb roadway width
- Soffit and drip groove geometry

15.11.3.J Girders/Diaphragms

- Prestressed girder sheets, end diaphragm sheets, and intermediate diaphragm can be copied from the Bridge and Structures Office library but they shall be modified to match the project requirements.

15.11.3.K Bridge Deck Reinforcement

- Plan and transverse section views
- Traffic barrier reinforcing bars shall be called out on the Bridge Deck Reinforcement Plan sheet by using an overall dimension. The S1 and S2 bars are to be detailed, dimensioned, and their spacing shall be shown only on the Traffic Barrier Details 1 sheet.

15.11.3.L Expansion Joints

15.11.3.M Traffic Barrier

- Traffic barrier sheets can be copied from the *Standard Plans* but they must be modified to match the project requirements.

15.11.3.N Bridge Approach Slab

- Approach slab sheets can be copied from the *Standard Plans* and modified as necessary for the project.

15.11.3.O Barlist

- The barlist sheets do not require stamping because they are not officially part of the contract plan set.

15.11.4 Structural Steel

15.11.4.A General

Flat pieces of steel are termed plates, bars, sheets or strips, depending on the dimensions.

15.11.4.B Bars

Up to 6 inches wide, 0.203 inch (3⁄16-inch) and over in thickness, or 6 inches to 8 inches wide, 0.230 inch (7⁄32-inch) and over in thickness.

15.11.4.C Plates

Over 8 inches wide, 0.230 inch (7⁄32-inch) and over in thickness, or over 48 inches wide, 0.180 in (11⁄64-inch) and over in thickness.

15.11.4.D Strips

Thinner pieces up to 12 inches wide are strips and over 12 inches are sheets. A complete table of classification may be found in the AISC *Manual of Steel Construction*, 8th Ed. Page 6.

15.11.4.E Labeling

The following table shows the usual method of labeling some of the most frequently used structural steel shapes. Note that the inches symbol (“) is omitted, but the foot symbol (‘) is used for length including lengths less than a foot.

Figure 11.1.5-E1

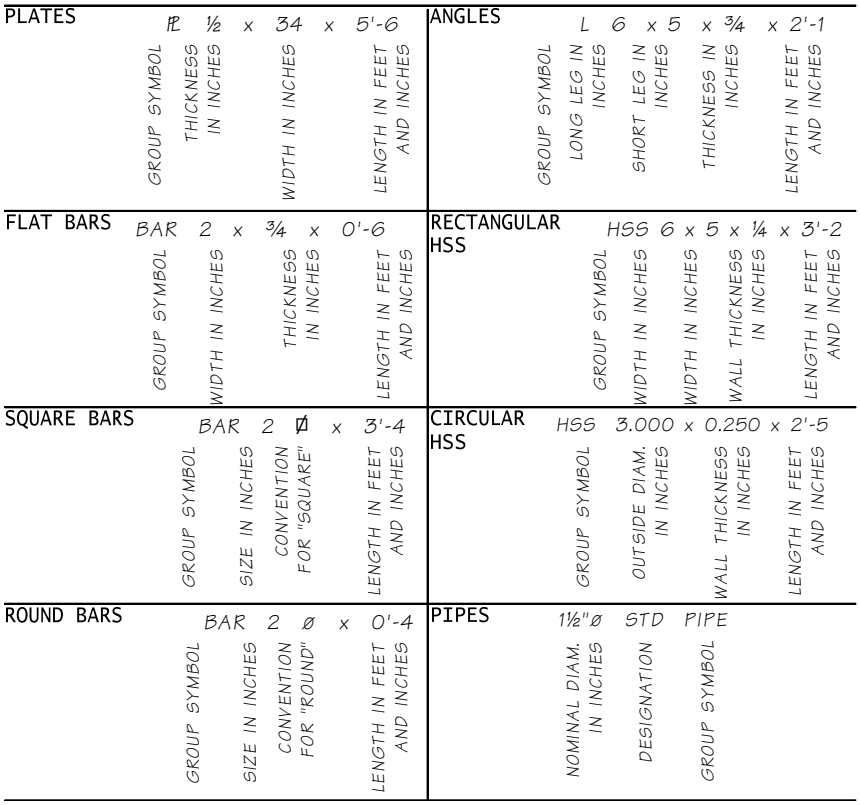

15.11.5 Aluminum Section Designations

The designations used in the tables are suggested for general use.

Section	Designation	Example
I-Beams	I *DEPTH* × *WT*	14 × 3.28
Wide-Flange Sections	WF *DEPTH* × *WT*	WF4 × 4.76
Wide-Flange Sections, Army-Navy Series	WF(A-N) *DEPTH* × *WT*	WF(A-N)4 × 1.79
American Standard Channels	C *DEPTH* × *WT*	C4 × 1.85
Special Channels	CS *DEPTH* × *WT*	CS4 × 3.32
Wing Channels	CS(WING) *WIDTH* × *WT*	CS(WING)4 × 0.90
Army-Navy Channels	C(A-N) *DEPTH* × *WT*	C(A-N)4 × 1.58
Angles	L *LL* × *LL* × *TH*	L3 × 3 × 0.25
Square End Angles	LS *LL* × *LL* × *TH*	LS2 × 2 × 0.187
Bulb Angles	BULB L *LL1* × *LL2* × *TH1* × *TH2*	BULB L4 × 3.5 × 0.375 × 0.375
Bulb Angle, Army-Navy Series	BULB L(A-N) *LL1* × *LL2* × *TH1* × *TH2*	BULB L(A-N) 3 × 2 × 0.188 × 0.188
Tees	T *DEPTH* × *WIDTH* × *WT*	T4 × 4 × 3.43
Army-Navy Tees	T(A-N) *DEPTH* × *WIDTH* × *WT*	T(A-N)4 × 4 × 2.27
Zees	Z *DEPTH* × *WIDTH* × *WT*	Z4 × 3.06 × 2.85
Plates	PL *TH* × *WIDTH*	PL¼ × 8
Rods	RD *DIA*	RD 1
Square Bars	SQ *SDIM*	SQ 4
Rectangle Bars	RECT *TH* × *WIDTH*	RECT¼ × 4
Round Tubes	*ODIA OD* × *TH* WALL	4OD × 0.125 WALL
Square Tubes	*ODIM SQ* × *TH* WALL	3SQ × 0.219 WALL
Rectangle Tubes	*DEPTH* × *WIDTH RECT* × *TH WALL*	4 × 1.5 RECT × 0.104 WALL

WT - WEIGHT in LB/FT based on density of 0.098
TH - THICKNESS, LL - LEG LENGTH, DIA – DIAMETER
ODIA - OUTSIDE DIAMETER, ODIM - OUTSIDE DIMENSION
SDIM - SIDE DIMENSION
All lengths are in inches

15.11.6 Abbreviations

Abbreviations shall be defined in the contract documents.

15.12 Bridge Load Rating

15.12.1 General

Load ratings shall be completed for all new, widened, or rehabilitated bridges where the rehabilitation alters the load carrying capacity of the structure. Load ratings shall be done immediately after the design is completed and rating calculations shall be filed separately in accordance with Section 13.4 and files shall be forwarded to WSDOT's Load Rating Engineer. A final stamped and signed load rating shall be provided at least 90-days prior to opening any bridge requiring load rating to traffic. Final approval of the load rating of a bridge shall rest with WSDOT's Load Rating Engineer.

New bridges shall be rated based on the Load and Resistance Factor Rating (LRFR) method in accordance with the AASHTO *Manual For Bridge Evaluation* (MBE), Chapter 13 of this manual and this chapter. NBI ratings shall be based on the HL-93 truck and shall be reported as a rating factor.

15.12.2 Load Rating Software

For prestressed concrete girder bridges and X-Beams, use BridgeLink to load rate structural elements. For all other cases where BridgeLink cannot be used, such as but not limited to, or steel structures or segmental boxes, CSiBridge shall be used. Obtain WSDOT's Load Rating Engineer's approval for the use of any other software prior to commencing any work.

For more complex structures such as steel curved girders and arches, different software may be used to analyze the loads after obtaining approval from WSDOT's Load Rating Engineer. Acceptable software currently includes CSiBridge.

Loads and capacities shall be tabulated in a manner that will make it simple for WSDOT to manipulate the data in the future. Method of tabulation shall be approved by WSDOT's Load Rating Engineer prior to commencing any work. Microsoft Excel shall be used for tabulation, and all cells in the spreadsheets shall be unlocked and any hidden code or functions shall be explained thoroughly in the report. Hand calculations shall be provided to verify all spreadsheets.

15.13 Appendices

Appendix 15.2-A1 Conceptual Plan Checklist

Appendix 15.2-A1 Conceptual Plan Checklist

Project _____ SR _____ Concept Plan by _____ Check by _____ Date_____

Plan

_____ Survey Lines and Station Ticks
_____ Survey Line Bearings
_____ Roadway and Median Widths
_____ Bridge Deck Lane and Shoulder Widths
_____ Bridge Deck Sidewalk Width
_____ Profile Grade and Pivot Point
_____ Roadway Superelevation Rate (if constant)
_____ Traffic Arrows
_____ Back to Back of Pavement Seats
_____ Span Lengths
_____ Existing utilities Type, Size, and Location
_____ Stream Flow Arrow
_____ R/W Lines and/or Easement Lines
_____ Points of Minimum Vertical Clearance
_____ Exist . Bridge No . (to be removed, widened)
_____ Section, Township, Range
_____ City or Town
_____ North Arrow
_____ SR Number
_____ Bearing of Piers, or note if radial

Typical Section

_____ Bridge Roadway Width
_____ Lane and Shoulder Widths
_____ Profile Grade and Pivot Point
_____ Superelevation Rate
_____ Survey Line
_____ BP/Pedestrian Rail dimensions
_____ Assumed Structure Depth/Prestressed Girder Type

Miscellaneous

_____ Assumed Structure Type
_____ Live Loading
_____ Undercrossing Alignment Profiles/Elevs .
_____ Bridge Deck Superelevation Diagrams
_____ Bridge Deck Alignment Curve Data
_____ Names

Elevation

_____ Full Length Reference Elevation Line
_____ Existing Ground Line x ft . Rt of Survey Line
_____ Pier Stations
_____ Profile Grade Vertical Curves
_____ BP/Pedestrian Rail
_____ Minimum Vertical Clearances
_____ Water Surface Elevations and Flow Data
_____ Datum
_____ Grade elevations shown are equal to ...

15.99 References

AASHTO LRFD *Bridge Design Specifications* LRFD-SGS-BDS), Latest Edition and Interims. American Association of State Highway and Transportation Officials (AASHTO), Washington, D.C.

AASHTO *Guide Specifications for LRFD Seismic Bridge Design* (LRFD-SGS), Latest Edition and Interims. American Association of State Highway and Transportation Officials (AASHTO), Washington, D.C.

AASHTO *Standard Specifications for Highway Bridges*, 17th edition

AASHTO *Manual for Bridge Evaluation*

ACI 355.4-11 (2014) *"Qualification of Post-Installed Adhesive Anchors in Concrete and Commentary,"* American Concrete Institute, Farmington Hills, MI.

WSDOT *Bridge Inspection Manual* M 36-64

WSDOT *Geotechnical Design Manual* M 46-03

WSDOT *Design Manual* M 22-01

WSDOT *Construction Manual* M 41-01

WSDOT *Local Agency Guidelines* M 36-63

WSDOT *Standard Specifications for Road, Bridge, and Municipal Construction* (*Standard Specifications*) M 41-10

WSDOT *Standard Plans* M 21.01

WSDOT *Hydraulics Manual* M 23-03

Washington Utilities and Transportation Commission *Clearance Rules and Regulations Governing Common Carrier Railroads*

American Railway Engineering and Maintenance Association (AREMA) *Manual for Railroad Engineering*. Note: This manual is used as the basic design and geometric criteria by all railroads. Use these criteria unless superseded by FHWA or WSDOT criteria.

The Union Pacific Railroad *"Guidelines for Design of Highway Separation Structures over Railroad (Overhead Grade Separation)"*

This page intentionally left blank.