Washington State Department of Transportation

Publications Transmittal

Transmittal Number	Date
PT 17-020	June 2017
Publication Title / Publication Number: *Bridge Design Manual* M 23-50.17	
Originating Organization: Engineering and Regional Operations, Bridge and Structures Office	

Remarks and Instructions

The *Bridge Design Manual* M 23-50 has been revised. Please remove and recycle the contents of the old *Bridge Design Manual* M 23-50 and replace with the June 2017 revision.

The complete manual, revision packages, and individual chapters can be accessed at www.wsdot.wa.gov/publications/manuals/m23-50.htm.

Please contact Scott Sargent at 360-705-7753 or sargenw@wsdot.wa.gov with comments, questions, or suggestions for improvement to the manual.

To get the latest information, please sign up for email updates for individual manuals at www.wsdot.wa.gov/publications/manuals.

Washington State Department of Transportation
Bridge and Structures Office
PO Box 47340
Olympia, WA 98504-7340
www.wsdot.wa.gov/eesc/bridge/index.cfm?fuseaction=home

Approved By

Signature

Washington State
Department of Transportation

Bridge Design Manual (LRFD)

M 23-50.17

June 2017

Engineering and Regional Operations
Bridge and Structures Office

Americans with Disabilities Act (ADA) Information

Materials can be made available in an alternate format by emailing the WSDOT Diversity/ADA Affairs Team at wsdotada@wsdot.wa.gov or by calling toll free, 855-362-4ADA (4232). Persons who are deaf or hard of hearing may make a request by calling the Washington State Relay at 711.

Title VI Notice to the Public

It is Washington State Department of Transportation (WSDOT) policy to ensure no person shall, on the grounds of race, color, national origin, or sex, as provided by Title VI of the Civil Rights Act of 1964, be excluded from participation in, be denied the benefits of, or be otherwise discriminated against under any of its federally funded programs and activities. Any person who believes his/her Title VI protection has been violated may file a complaint with WSDOT's Office of Equal Opportunity (OEO). For Title VI complaint forms and advice, please contact OEO's Title VI Coordinator at 360-705-7082.

To get the latest information on WSDOT publications, sign up for individual email updates at www.wsdot.wa.gov/publications/manuals.

Washington State Department of Transportation
Bridge and Structures Office
PO Box 47340
Olympia, WA 98504-7340

Phone: 360-705-7753
Email: sargenw@wsdot.wa.gov
www.wsdot.wa.gov/eesc/bridge/index.cfm?fuseaction=home

Foreword

This manual has been prepared to provide Washington State Department of Transportation (WSDOT) bridge design engineers with a guide to the design criteria, analysis methods, and detailing procedures for the preparation of highway bridge and structure construction plans, specifications, and estimates.

It is not intended to be a textbook on structural engineering. It is a guide to acceptable WSDOT practice, This manual does not cover all conceivable problems that may arise, but is intended to be sufficiently comprehensive to, along with sound engineering judgment, provide a safe guide for bridge engineering.

A thorough knowledge of the contents of this manual is essential for a high degree of efficiency in the engineering of WSDOT highway structures.

This loose leaf form of this manual facilitates modifications and additions. New provisions and revisions will be issued from time to time to keep this guide current. Suggestions for improvement and updating the manual are always welcome.

All manual modifications must be approved by the Bridge Design Engineer.

The Federal Highway Administration has agreed to approve designs that follow the guidance in the *Bridge Design Manual*; therefore, following the guidance is mandatory for state highway projects. When proposed designs meet the requirements contained in the *Bridge Design Manual*, little additional documentation is required.

The electronic version of this document is available at:
www.wsdot.wa.gov/publications/manuals/m23-50.htm

Tom Baker, P.E.
Bridge and Structures Engineer

Debbie Lehmann, P.E.
FHWA Washington Division Bridge Engineer

Contents

Chapter 1 General Information 1-1

1.1 Manual Description 1-1
1.1.1 Purpose 1-1
1.1.2 Specifications 1-2
1.1.3 Format 1-2
1.1.4 Revisions 1-4
1.1.5 Design Memorandums 1-4

1.2 Bridge and Structures Office Organization 1-5
1.2.1 General 1-5
1.2.2 Organizational Elements of the Bridge Office 1-5
1.2.3 Unit Responsibilities and Expertise 1-9

1.3 Roles, Responsibilities and Procedures 1-10
1.3.1 General 1-10
1.3.2 General Design Procedures 1-10
1.3.3 Design/Check Calculation File 1-17
1.3.4 PS&E Review Period 1-19
1.3.5 Addenda 1-19
1.3.6 Shop Plans and Permanent Structure Construction Procedures 1-19
1.3.7 Contract Plan Changes (Change Orders and As-Builts) 1-22
1.3.8 Archiving Design Calculations, Design Files, and S&E Files 1-24
1.3.9 Public Disclosure Policy Regarding Bridge Plans 1-26
1.3.10 Use of Computer Software 1-27

1.4 Quality Control/Quality Assurance/Quality Verification (QC/QA/QV) Procedures 1-28
1.4.1 General 1-28
1.4.2 WSDOT Prepared Bridge (or Structure) Preliminary Plans 1-28
1.4.3 WSDOT Prepared PS&E 1-29
1.4.4 Consultant Prepared PS&E/Preliminary Plans on WSDOT Right of Way 1-34
1.4.5 Structural Design Work Prepared Under Design-Build or GCCM Methods of Project Delivery 1-35

1.5 Bridge Design Scheduling 1-36
1.5.1 General 1-36
1.5.2 Preliminary Design Schedule 1-36
1.5.3 Final Design Schedule 1-36

1.6 Guidelines for Bridge Site Visits 1-39
1.6.1 Bridge Rehabilitation Projects 1-39
1.6.2 Bridge Widening and Seismic Retrofits 1-39
1.6.3 Rail and Minor Expansion Joint Retrofits 1-39
1.6.4 New Bridges 1-40
1.6.5 Bridge Demolition 1-40
1.6.6 Proximity of Railroads Adjacent to the Bridge Site 1-40

1.7 Appendices 1-41
Appendix 1.1-A1 Bridge Design Manual Revision QC/QA Worksheet 1-42
Appendix 1.3-A1 Bridge & Structures Design Calculations 1-43
Appendix 1.4-A1 QC/QA Signature Sheet 1-44

1.99 References 1-45

Chapter 2 Preliminary Design 2-1

2.1 Preliminary Studies 2-1

2.2 Preliminary Plan 2-7
2.2.1 Development of the Preliminary Plan 2-7
2.2.2 Documentation 2-9
2.2.3 General Factors for Consideration 2-10
2.2.4 Permits 2-12
2.2.5 Preliminary Cost Estimate 2-13
2.2.6 Approvals 2-13

2.3 Preliminary Plan Criteria 2-17
2.3.1 Highway Crossings 2-17
2.3.2 Railroad Crossings 2-21
2.3.3 Water Crossings 2-23
2.3.4 Bridge Widening 2-25
2.3.5 Detour Structures 2-26
2.3.6 Retaining Walls and Noise Walls 2-26
2.3.7 Bridge Deck Drainage 2-26
2.3.8 Bridge Deck Protection Systems 2-27
2.3.9 Construction Clearances 2-27
2.3.10 Design Guides for Falsework Depth Requirements 2-27
2.3.11 Inspection and Maintenance Access 2-29

2.4 Selection of Structure Type 2-31

2.5 Aesthetic Considerations 2-39

2.6 Miscellaneous 2-42

2.7 WSDOT Standards for Highway Bridges 2-43
2.7.1 Design Elements 2-43
2.7.2 Detailing the Preliminary Plan 2-45

2.8 Bridge Security 2-46
2.8.1 General 2-46
2.8.2 Design 2-46
2.8.3 Design Criteria 2-47

2.9 Bridge Standard Drawings 2-49

2.10 Appendices 2-50
Appendix 2.2-A1 Bridge Site Data General 2-51
Appendix 2.2-A2 Bridge Site Data Rehabilitation 2-52
Appendix 2.2-A3 Bridge Site Data Stream Crossing 2-53
Appendix 2.2-A4 Preliminary Plan Checklist 2-54
Appendix 2.2-A5 Request For Preliminary Geotechnical Information 2-56
Appendix 2.3-A1 Bridge Stage Construction Comparison 2-58

2.99 References 2-60

Chapter 3 Loads 3-1

3.1 Scope 3-1

3.2 Definitions 3-2

3.3 Load Designations 3-3

3.4 Limit States 3-4

3.5 Load Factors and Load Combinations 3-5
3.5.1 Load Factors for Substructure 3-6

3.6 Loads and Load Factors for Construction 3-7

3.7 Load Factors for Post-tensioning 3-8
3.7.1 Post-tensioning Effects from Superstructure 3-8
3.7.2 Secondary Forces from Post-tensioning, PS 3-8

3.8 Permanent Loads 3-9
3.8.1 Deck Overlay Requirement 3-9

3.9 Live Loads 3-10
3.9.1 Design Live Load 3-10
3.9.2 Loading for Live Load Deflection Evaluation 3-10
3.9.3 Distribution to Superstructure 3-10
3.9.4 Bridge Load Rating 3-13

3.10 Pedestrian Loads 3-14

3.11 Wind Loads 3-15
3.11.1 Wind Load to Superstructure 3-15
3.11.2 Wind Load to Substructure 3-15
3.11.3 Wind on Noise Walls 3-15

3.12 Loads on Culverts 3-16

3.13 Earthquake Effects 3-17

3.14 Earth Pressure 3-18

3.15 Force Effects Due to Superimposed Deformations 3-19

3.16 Other Loads 3-20
3.16.1 Buoyancy 3-20
3.16.2 Collision Force on Bridge Substructure 3-20
3.16.3 Collision Force on Traffic Barrier 3-20
3.16.4 Force from Stream Current, Floating Ice, and Drift 3-20
3.16.5 Ice Load 3-20
3.16.6 Uniform Temperature Load 3-20

3.99 References 3-21

Chapter 4 Seismic Design and Retrofit 4-1

4.1 General 4-1

4.2 WSDOT Additions and Modifications to AASHTO *Guide Specifications for LRFD Seismic Bridge Design* (SEISMIC) 4-2

4.2.1 Definitions 4-2
4.2.2 Earthquake Resisting Systems (ERS) Requirements for Seismic Design Catagories (SDCs) C and D 4-2
4.2.3 Seismic Ground Shaking Hazard 4-7
4.2.4 Selection of Seismic Design Category (SDC) 4-9
4.2.5 Temporary and Staged Construction 4-9
4.2.6 Load and Resistance Factors 4-9
4.2.7 Balanced Stiffness Requirements and Balanced Frame Geometry Recommendation. 4-10
4.2.8 Selection of Analysis Procedure to Determine Seismic Demand 4-10
4.2.9 Member Ductility Requirement for SDCs C and D 4-10
4.2.10 Longitudinal Restrainers 4-10
4.2.11 Abutments 4-10
4.2.12 Foundation – General 4-15
4.2.13 Foundation – Spread Footing 4-15
4.2.14 Procedure 3: Nonlinear Time History Method 4-15
4.2.15 I_{eff} for Box Girder Superstructure 4-15
4.2.16 Foundation Rocking 4-15
4.2.17 Drilled Shafts 4-16
4.2.18 Longitudinal Direction Requirements 4-16
4.2.19 Liquefaction Design Requirements. 4-16
4.2.20 Reinforcing Steel 4-16
4.2.21 Concrete Modeling 4-17
4.2.22 Expected Nominal Moment Capacity 4-17
4.2.23 Interlocking Bar Size 4-17
4.2.24 Splicing of Longitudinal Reinforcement in Columns Subject to Ductility Demands for SDCs C and D. 4-17
4.2.25 Development Length for Column Bars Extended into Oversized Pile Shafts f or SDCs C and D 4-17
4.2.26 Lateral Confinement for Oversized Pile Shaft for SDCs C and D 4-18
4.2.27 Lateral Confinement for Non-Oversized Strengthened Pile Shaft for SDCs C and D 4-18
4.2.28 Requirements for Capacity Protected Members 4-18
4.2.29 Superstructure Capacity Design for Transverse Direction (Integral Bent Cap) for SDCs C and D 4-18
4.2.30 Superstructure Design for Non Integral Bent Caps for SDCs B, C, and D 4-19
4.2.31 Joint Proportioning 4-19
4.2.32 Cast-in-Place and Precast Concrete Piles 4-19

4.3 Seismic Design Requirements for Bridge Modifications and Widening Projects 4-20
4.3.1 General 4-20
4.3.2 Bridge Widening Project Classification 4-20
4.3.3 Seismic Design Guidance: 4-21
4.3.4 Scoping for Bridge Widening and Liquefaction Mitigation 4-24
4.3.5 Design and Detailing Considerations 4-24

4.4 Seismic Retrofitting of Existing Bridges 4-26
4.4.1 Seismic Analysis Requirements 4-26
4.4.2 Seismic Retrofit Design 4-26
4.4.3 Computer Analysis Verification 4-27
4.4.4 Earthquake Restrainers 4-27
4.4.5 Isolation Bearings 4-27

4.5 Seismic Design Requirements for Retaining Walls 4-28
4.5.1 General 4-28

4.6 Appendices 4-29

4.99 References 4-30
Appendix 4-B1 Design Examples of Seismic Retrofits 4-31
Appendix 4-B2 SAP2000 Seismic Analysis Example 4-36

Chapter 5 Concrete Structures 5-1

5.0 General 5-1

5.1 Materials 5-2
5.1.1 Concrete 5-2
5.1.2 Reinforcing Steel 5-8
5.1.3 Prestressing Steel 5-12
5.1.4 Prestress Losses 5-19
5.1.5 Prestressing Anchorage Systems 5-23
5.1.6 Post-Tensioning Ducts 5-23

5.2 Design Considerations 5-24
5.2.1 Service and Fatigue Limit States 5-24
5.2.2 Strength-Limit State 5-25
5.2.3 Strut-and-Tie Model 5-29
5.2.4 Deflection and Camber 5-30
5.2.5 Construction Joints 5-32
5.2.6 Inspection Lighting and Access 5-33

5.3 Reinforced Concrete Box Girder Bridges 5-36
5.3.1 Box Girder Basic Geometries 5-36
5.3.2 Reinforcement 5-41
5.3.3 Crossbeam 5-49
5.3.4 End Diaphragm 5-52
5.3.5 Dead Load Deflection and Camber 5-55
5.3.6 Thermal Effects 5-55
5.3.7 Hinges 5-56
5.3.8 Drain Holes 5-56

5.4 Hinges and Inverted T-Beam Pier Caps 5-58

5.5 Bridge Widenings 5-61
5.5.1 Review of Existing Structures 5-61
5.5.2 Analysis and Design Criteria 5-62
5.5.3 Removing Portions of the Existing Structure 5-65
5.5.4 Attachment of Widening to Existing Structure 5-66
5.5.5 Expansion Joints 5-78
5.5.6 Possible Future Widening for Current Designs 5-79
5.5.7 Bridge Widening Falsework 5-79
5.5.8 Existing Bridge Widenings 5-79

5.6 Prestressed Concrete Girder Superstructures 5-80
5.6.1 WSDOT Standard Prestressed Concrete Girder Types 5-80
5.6.2 Design Criteria 5-83
5.6.3 Fabrication and Handling 5-95
5.6.4 Superstructure Optimization 5-99
5.6.5 Repair of Damaged Prestressed Concrete Girders at Fabrication 5-105
5.6.6 Repair of Damaged Prestressed Concrete Girders in Existing Bridges 5-106
5.6.7 Deck Girders 5-111
5.6.8 Prestressed Concrete Tub Girders 5-113
5.6.9 Prestressed Concrete Girder Checking Requirement 5-114
5.6.10 Review of Shop Plans for Pre-tensioned Girders 5-114

5.7 Bridge Decks . . . 5-115
5.7.1 Bridge Deck Requirements . . . 5-115
5.7.2 Bridge Deck Reinforcement . . . 5-116
5.7.3 Stay-in-place Deck Panels . . . 5-121
5.7.4 Bridge Deck Protection . . . 5-122
5.7.5 Bridge Deck HMA Paving Design Policies . . . 5-128

5.8 Cast-in-place Post-Tensioned Bridges . . . 5-133
5.8.1 Design Parameters . . . 5-133
5.8.2 Analysis . . . 5-142
5.8.3 Post-tensioning . . . 5-145
5.8.4 Shear and Anchorages . . . 5-150
5.8.5 Temperature Effects . . . 5-151
5.8.6 Construction . . . 5-152
5.8.7 Post-tensioning Notes — Cast-in-place Girders . . . 5-154

5.9 Spliced Prestressed Concrete Girders . . . 5-156
5.9.1 Definitions . . . 5-156
5.9.2 WSDOT Criteria for Use of Spliced Girders . . . 5-157
5.9.3 Girder Segment Design . . . 5-157
5.9.4 Joints Between Segments . . . 5-158
5.9.5 Review of Shop Plans for Spliced Prestressed Concrete Girders . . . 5-163
5.9.6 Post-tensioning Notes — Spliced Prestressed Concrete Girders . . . 5-164

5.10 Bridge Standard Drawings . . . 5-166
Girder Sections . . . 5-166
Superstructure Construction Sequences . . . 5-166
W Girders . . . 5-166
WF Girders . . . 5-166
Wide Flange Thin Deck Girders . . . 5-167
Wide Flange Deck Girders . . . 5-167
Deck Bulb Tee Girders . . . 5-167
Slabs . . . 5-167
Tub Girders . . . 5-168
Stay-In-Place Deck Panel . . . 5-168
Post Tensioned Spliced Girders . . . 5-168

5.11 Appendices . . . 5-170
Appendix 5.1-A1 Standard Hooks . . . 5-172
Appendix 5.1-A2 Minimum Reinforcement Clearance and Spacing for Beams and Columns 5-173
Appendix 5.1-A3 Reinforcing Bar Properties . . . 5-174
Appendix 5.1-A4 Tension Development Length of Deformed Bars . . . 5-175
Appendix 5.1-A5 Compression Development Length and Minimum Lap Splice of Grade 60 Bars . . . 5-178
Appendix 5.1-A6 Tension Development Length of 90º and 180º Standard Hooks . . . 5-179
Appendix 5.1-A7 Tension Lap Splice Lengths of Grade 60 Bars – Class B . . . 5-181
Appendix 5.1-A8 Prestressing Strand Properties and Development Length . . . 5-184
Appendix 5.2-A1 Working Stress Design . . . 5-185
Appendix 5.2-A2 Working Stress Design . . . 5-186
Appendix 5.2-A3 Working Stress Design . . . 5-187
Appendix 5.3-A1 Positive Moment Reinforcement . . . 5-188
Appendix 5.3-A2 Negative Moment Reinforcement . . . 5-189
Appendix 5.3-A3 Adjusted Negative Moment Case I (Design for M at Face of Support) . . . 5-190
Appendix 5.3-A4 Adjusted Negative Moment Case II (Design for M at ¼ Point) . . . 5-191
Appendix 5.3-A5 Cast-In-Place Deck Slab Design for Positive Moment Regions f'_c = 4.0 ksi . . . 5-192

Appendix 5.3-A6	Cast-In-Place Deck Slab Design for Negative Moment Regions f'_c = 4.0 ksi	5-193
Appendix 5.3-A7	Slab Overhang Design-Interior Barrier Segment	5-194
Appendix 5.3-A8	Slab Overhang Design-End Barrier Segment	5-195
Appendix 5.6-A1-1	Span Capability of W Girders	5-196
Appendix 5.6-A1-2	Span Capability of WF Girders	5-197
Appendix 5.6-A1-3	Span Capability of Deck Bulb Tee Girders	5-199
Appendix 5.6-A1-4	Span Capability of WF Thin Deck Girders	5-200
Appendix 5.6-A1-5	Span Capability of WF Deck Girders	5-202
Appendix 5.6-A1-6	Span Capability of Trapezoidal Tub Girders without Top Flange	5-204
Appendix 5.6-A1-7	Span Capability of Trapezoidal Tub Girders with Top Flange	5-205
Appendix 5.6-A1-8	Span Capability of Post-tensioned Spliced I-Girders	5-206
Appendix 5.6-A1-9	Span Capability of Post-tensioned Spliced Tub Girders	5-208
Appendix 5-B1	"A" Dimension for Precast Girder Bridges	5-210
Appendix 5-B2	Vacant	5-220
Appendix 5-B3	Existing Bridge Widenings	5-221
Appendix 5-B4	Post-tensioned Box Girder Bridges	5-223
Appendix 5-B5	Simple Span Prestressed Girder Design	5-229
Appendix 5-B6	Cast-in-Place Slab Design Example	5-314
Appendix 5-B7	Precast Concrete Stay-in-place (SIP) Deck Panel	5-332
Appendix 5-B8	W35DG Deck Bulb Tee 48" Wide	5-350
Appendix 5-B9	Prestressed Voided Slab with Cast-in-Place Topping	5-362
Appendix 5-B10	Positive EQ Reinforcement at Interior Pier of a Prestressed Girder	5-390
Appendix 5-B11	LRFD Wingwall Design Vehicle Collision	5-395
Appendix 5-B12	Flexural Strength Calculations for Composite T-Beams	5-398
Appendix 5-B13	Strut-and-Tie Model Design Example for Hammerhead Pier	5-404
Appendix 5-B14	Shear and Torsion Capacity of a Reinforced Concrete Beam	5-413
Appendix 5-B15	Sound Wall Design – Type D-2k	5-419

5.99 References 5-433

Chapter 6 Structural Steel 6-1

6.0 Structural Steel 6-1
6.0.1 Introduction 6-1
6.0.2 Special Requirements for Steel Bridge Rehabilitation or Modification 6-1

6.1 Design Considerations 6-2
6.1.1 Codes, Specification, and Standards 6-2
6.1.2 WSDOT Steel Bridge Practice 6-3
6.1.3 Preliminary Girder Proportioning 6-4
6.1.4 Estimating Structural Steel Weights 6-4
6.1.5 Bridge Steels 6-6
6.1.6 Plate Sizes 6-7
6.1.7 Girder Segment Sizes 6-7
6.1.8 Computer Programs 6-8
6.1.9 Fasteners 6-8

6.2 Girder Bridges 6-10

6.3 Design of I-Girders 6-14
6.3.1 Limit States for AASHTO LRFD 6-14
6.3.2 Composite Section 6-14
6.3.3 Flanges 6-15
6.3.4 Webs 6-15
6.3.5 Transverse Stiffeners 6-15
6.3.6 Longitudinal Stiffeners 6-16
6.3.7 Bearing Stiffeners 6-16
6.3.8 Cross Frames 6-16
6.3.9 Bottom Laterals 6-18
6.3.10 Bolted Field Splice for Girders 6-18
6.3.11 Camber 6-19
6.3.12 Bridge Deck Placement Sequence 6-21
6.3.13 Bridge Bearings for Steel Girders 6-22
6.3.14 Surface Roughness and Hardness 6-22
6.3.15 Welding 6-24
6.3.16 Shop Assembly 6-25

6.4 Plan Details 6-27
6.4.1 General 6-27
6.4.2 Structural Steel Notes 6-27
6.4.3 Framing Plan 6-27
6.4.4 Girder Elevation 6-27
6.4.5 Typical Girder Details 6-28
6.4.6 Cross Frame Details 6-28
6.4.7 Camber Diagram and Bearing Stiffener Rotation 6-29
6.4.8 Bridge Deck 6-29
6.4.9 Handrail Details, Inspection Lighting, and Access 6-30
6.4.10 Box Girder Details 6-30

6.5 Shop Plan Review 6-32

6.6 Bridge Standard Drawings 6-33
Structural Steel 6-33

6.99 References 6-34

Chapter 7 Substructure Design 7-1

7.1 General Substructure Considerations 7-1
7.1.1 Foundation Design Process 7-1
7.1.2 Foundation Design Limit States 7-3
7.1.3 Seismic Design 7-3
7.1.4 Substructure and Foundation Loads 7-3
7.1.5 Concrete Class for Substructure 7-5
7.1.6 Foundation Seals 7-6

7.2 Foundation Modeling for Seismic Loads 7-9
7.2.1 General 7-9
7.2.2 Substructure Elastic Dynamic Analysis Procedure 7-9
7.2.3 Bridge Model Section Properties 7-10
7.2.4 Bridge Model Verification 7-11
7.2.5 Deep Foundation Modeling Methods 7-12
7.2.6 Lateral Analysis of Piles and Shafts 7-16
7.2.7 Spread Footing Modeling 7-21

7.3 Column Design 7-24
7.3.1 General Design Considerations 7-24
7.3.2 Slenderness Effects 7-25
7.3.3 Shear Design 7-27
7.3.4 Column Silos 7-27
7.3.5 Column Reinforcement 7-30
7.3.6 Column Hinges 7-42
7.3.7 Reduced Column Section 7-44

7.4 Crossbeams 7-48
7.4.1 General Design 7-48

7.5 Abutment Design and Details 7-52
7.5.1 General 7-52
7.5.2 Embankment at Abutments 7-55
7.5.3 Abutment Loading 7-55
7.5.4 Temporary Construction Load Cases 7-58
7.5.5 Abutment Bearings and Girder Stops 7-58
7.5.6 Abutment Expansion Joints 7-60
7.5.7 Open Joint Details 7-60
7.5.8 Construction Joints 7-61
7.5.9 Abutment Wall Design 7-61
7.5.10 Drainage and Backfilling 7-64
7.5.11 Abutments Supported By Mechanically-Stabilized Earth Walls 7-66

7.6 Abutment Wing Walls and Curtain Walls 7-70
7.6.1 Traffic Barrier Loads 7-70
7.6.2 Wing Wall Design 7-70
7.6.3 Wing Wall Detailing 7-70

7.7 Footing Design 7-71
7.7.1 General Footing Criteria 7-71
7.7.2 Loads and Load Factors 7-72
7.7.3 Geotechnical Report Summary 7-73
7.7.4 Spread Footing Design 7-74
7.7.5 Pile-Supported Footing Design 7-80

7.8 Shafts 7-82
7.8.1 Axial Resistance 7-82
7.8.2 Structural Design and Detailing 7-86

7.9 Piles and Piling 7-95
7.9.1 Pile Types 7-95
7.9.2 Single Pile Axial Resistance 7-96
7.9.3 Block Failure 7-97
7.9.4 Pile Uplift 7-97
7.9.5 Pile Spacing 7-97
7.9.6 Structural Design and Detailing of CIP Concrete Piles 7-97
7.9.7 Pile Splices 7-99
7.9.8 Pile Lateral Design 7-99
7.9.9 Battered Piles 7-99
7.9.10 Pile Tip Elevations and Quantities 7-99
7.9.11 Plan Pile Resistance 7-100

7.10 Concrete-Filled Steel Tubes 7-101
7.10.1 Scope 7-101
7.10.2 Design Requirements 7-102
7.10.3 CF**S**T-to-Cap Annular Ring Connections 7-107
7.10.4 CFST-to-Cap Reinforced Concrete Connections 7-112
7.10.5 RCFST-to-Column and CFST-to Column Connections 7-114
7.10.6 Partially-filled CF***S***T 7-115
7.10.7 Construction Requirements 7-116
7.10.8 Notation 7-117

7.11 Bridge Standard Drawings 7-119

7.12 Appendices 7-120
Appendix 7.3-A2 Noncontact Lap Splice Length Column to Shaft Connections 7-121
Appendix 7-B1 Linear Spring Calculation Method II (Technique I) 7-123
Appendix 7-B2 Pile Footing Matrix Example Method II (Technique I) 7-128
Appendix 7-B3 Non-Linear Springs Method III 7-131

7.99 References 7-133

Chapter 8 Walls and Buried Structures 8-1

8.1 Retaining Walls 8-1
8.1.1 General 8-1
8.1.2 Common Types of Retaining Walls 8-2
8.1.3 General Design Considerations 8-4
8.1.4 Design of Reinforced Concrete Cantilever Retaining Walls 8-4
8.1.5 Design of Cantilever Soldier Pile and Soldier Pile Tieback Walls 8-9
8.1.6 Design of Structural Earth Walls 8-13
8.1.7 Design of Standard Plan Geosynthetic Walls 8-13
8.1.8 Design of Soil Nail Walls 8-13
8.1.9 Miscellaneous Items 8-13

8.2 Noise Barrier Walls 8-17
8.2.1 General 8-17
8.2.2 Loads 8-17
8.2.3 Design 8-18

8.3 Buried Structures 8-21
8.3.1 General 8-21
8.3.2 WSDOT Designed Standard Culverts 8-21
8.3.3 General Design Requirements 8-21
8.3.4 Design of Box Culverts 8-24
8.3.5 Design of Precast Reinforced Concrete Three-Sided Structures 8-25
8.3.6 Design of Detention Vaults 8-26
8.3.7 Design of Tunnels 8-28

8.4 Bridge Standard Drawings 8-30

8.5 Appendices 8-31
Appendix 8.1-A1 Summary of Design Specification Requirements for Walls 8-32

8.99 References 8-35

Chapter 9 Bearings and Expansion Joints 9-1

9.1 Expansion Joints 9-1
9.1.1 General Considerations 9-1
9.1.2 General Design Criteria 9-3
9.1.3 Small Movement Range Joints 9-4
9.1.4 Medium Movement Range Joints 9-11
9.1.5 Large Movement Range Joints 9-15

9.2 Bearings 9-22
9.2.1 General Considerations 9-22
9.2.2 Force Considerations 9-22
9.2.3 Movement Considerations 9-23
9.2.4 Detailing Considerations 9-23
9.2.5 Bearing Types 9-24
9.2.6 Miscellaneous Details 9-30
9.2.7 Contract Drawing Representation 9-31
9.2.8 Shop Drawing Review 9-31
9.2.9 Bearing Replacement Considerations 9-32

9.3 Seismic Isolation Bearings 9-33
9.3.1 General Considerations 9-33
9.3.2 General Design Criteria 9-34
9.3.3 Seismic Isolation Bearing Submittal Requirements 9-34
9.3.4 Seismic Isolation Bearing Review Process 9-35
9.3.5 Seismic Isolation Bearing Inspection 9-37

9.4 Bridge Standard Drawings 9-38
Expansion Joints 9-38

Chapter 10 Signs, Barriers, Approach Slabs, and Utilities 10-1

10.1 Sign and Luminaire Supports 10-1
10.1.1 Loads 10-1
10.1.2 Bridge Mounted Signs 10-3
10.1.3 Monotube Sign Structures Mounted on Bridges 10-7
10.1.4 Monotube Sign Structures 10-8
10.1.5 Foundations 10-12
10.1.6 Truss Sign Bridges: Foundation Sheet Design Guidelines 10-15

10.2 Bridge Traffic Barriers 10-16
10.2.1 General Guidelines 10-16
10.2.2 Bridge Railing Test Levels 10-17
10.2.3 Available WSDOT Designs 10-17
10.2.4 Design Criteria 10-21

10.3 At Grade Concrete Barriers 10-26
10.3.1 Differential Grade Concrete Barriers 10-26
10.3.2 Traffic Barrier Moment Slab 10-27
10.3.3 Precast Concrete Barrier 10-31

10.4 Bridge Traffic Barrier Rehabilitation 10-32
10.4.1 Policy 10-32
10.4.2 Guidelines 10-32
10.4.3 Design Criteria 10-32
10.4.4 WSDOT Bridge Inventory of Bridge Rails 10-33
10.4.5 Available Retrofit Designs 10-33
10.4.6 Available Replacement Designs 10-34

10.5 Bridge Railing 10-35
10.5.1 Design 10-35
10.5.2 Railing Types 10-35

10.6 Bridge Approach Slabs 10-36
10.6.1 Notes to Region for Preliminary Plan 10-36
10.6.2 Bridge Approach Slab Design Criteria 10-37
10.6.3 Bridge Approach Slab Detailing 10-37
10.6.4 Skewed Bridge Approach Slabs 10-38
10.6.5 Approach Anchors and Expansion Joints 10-39
10.6.6 Bridge Approach Slab Addition or Retrofit to Existing Bridges 10-40
10.6.7 Bridge Approach Slab Staging 10-42

10.7 Traffic Barrier on Bridge Approach Slabs 10-43
10.7.1 Bridge Approach Slab over Wing Walls, Cantilever Walls or Geosynthetic Walls 10-43
10.7.2 Bridge Approach Slab over SE Walls 10-45

10.8 Utilities Installed with New Construction 10-46
10.8.1 General Concepts 10-46
10.8.2 Utility Design Criteria 10-49
10.8.3 Box/Tub Girder Bridges 10-51
10.8.4 Traffic Barrier Conduit 10-51
10.8.5 Conduit Types 10-52
10.8.6 Utility Supports 10-52

10.9 Utility Review Procedure for Installation on Existing Bridges 10-54
10.9.1 Utility Review Checklist 10-55

10.10 Drilled Anchors For Permanent Attachments 10-57

10.11 Drainage Design 10-58

10.12 Bridge Security 10-59
10.12.1 General 10-59
10.12.2 Design 10-59
10.12.3 Design Criteria 10-60

10.13 Temporary Bridges 10-61
10.13.1 General 10-61
10.13.2 Design 10-61
10.13.3 NBI Requirements 10-62
10.13.4 Submittal Requirements 10-62

10.14 Bridge Standard Drawings 10-64

10.15 References 10-66

Chapter 11 Detailing Practice 11-1

11.1 Detailing Practice 11-1
11.1.1 Standard Office Practices. 11-1
11.1.2 Bridge Office Standard Drawings and Office Examples 11-8
11.1.3 Plan Sheets 11-9
11.1.4 Electronic Plan Sharing Policy. 11-12
11.1.5 Structural Steel. 11-12
11.1.6 Aluminum Section Designations 11-14
11.1.7 Abbreviations. 11-15

11.2 Bridge Standard Drawings. 11-22

11.3 Appendices 11-23
Appendix 11.1-A1 Dimensional Callout Example. 11-24
Appendix 11.1-A2 Typical Details. 11-25
Appendix 11.1-A3 Typical Section Callouts 11-26

Chapter 12 Quantities, Costs, and Specifications 12-1

12.1 Quantities - General 12-1
12.1.1 Cost Estimating Quantities 12-1
12.1.2 Not Included in Bridge Quantities List 12-2

12.2 Computation of Quantities 12-3
12.2.1 Responsibilities 12-3
12.2.2 Procedure for Computation 12-3
12.2.3 Data Source 12-4
12.2.4 Accuracy 12-4
12.2.5 Excavation 12-4
12.2.6 Shoring or Extra Excavation, Class A 12-7
12.2.7 Piling 12-9
12.2.8 Conduit Pipe 12-10
12.2.9 Private Utilities Attached To Bridge Structures 12-10
12.2.10 Drilled Shafts 12-11

12.3 Construction Costs 12-12
12.3.1 Introduction 12-12
12.3.2 Factors Affecting Costs 12-12
12.3.3 Development of Cost Estimates 12-13

12.4 Construction Specifications and Estimates 12-16
12.4.1 General 12-16
12.4.2 Definitions 12-16
12.4.3 General Bridge S&E Process 12-17
12.4.4 Reviewing Bridge Plans 12-18
12.4.5 Preparing the Bridge Cost Estimates 12-19
12.4.6 Preparing the Bridge Specifications 12-20
12.4.7 Preparing the Bridge Working Day Schedule 12-21
12.4.8 Reviewing Projects Prepared by Consultants 12-21
12.4.9 Submitting the PS&E Package 12-22
12.4.10 PS&E Review Period and Turn-in for AD Copy 12-23

12.5 Appendices 12-25
Appendix 12.1-A1 Not Included In Bridge Quantities List 12-26
Appendix 12.2-A1 Bridge Quantities 12-27
Appendix 12.3-A1 Structural Estimating Aids Construction Costs 12-33
Appendix 12.3-A2 Structural Estimating Aids Construction Costs 12-35
Appendix 12.3-A3 Structural Estimating Aids Construction Costs 12-37
Appendix 12.3-A4 Structural Estimating Aids Construction Costs 12-39
Appendix 12.3-B1 Cost Estimate Summary 12-40
Appendix 12.4-A1 Special Provisions Checklist 12-41
Appendix 12.4-A2 Structural Estimating Aids Construction Time Rates 12-46
Appendix 12.4-B1 Construction Working Day Schedule 12-48

Chapter 13 Bridge Load Rating 13-1

13.1 General 13-1
13.1.1 LRFR Method per the MBE 13-2
13.1.2 Load Factor Method (LFR) 13-5
13.1.3 Allowable Stress Method (ASD) 13-7
13.1.4 Live Loads 13-7
13.1.5 Rating Trucks 13-8

13.2 Special Rating Criteria 13-11
13.2.1 Dead Loads 13-11
13.2.2 Live Load Distribution Factors 13-11
13.2.3 Reinforced Concrete Structures 13-11
13.2.4 Prestressed Concrete Structures 13-11
13.2.5 Concrete Decks 13-12
13.2.6 Concrete Crossbeams 13-12
13.2.7 In-Span Hinges 13-12
13.2.8 Girder Structures 13-12
13.2.9 Box Girder Structures 13-12
13.2.10 Segmental Concrete Bridges 13-12
13.2.11 Concrete Slab Structures 13-12
13.2.12 Steel Structures 13-12
13.2.13 Steel Floor Systems 13-13
13.2.14 Steel Truss Structures 13-13
13.2.15 Timber Structures 13-13
13.2.16 Widened or Rehabilitated Structures 13-13
13.2.17 Culverts 13-14
13.2.18 Overloads 13-14

13.3 Load Rating Software 13-15

13.4 Load Rating Reports 13-16

13.5 Appendices 13-17
Appendix 13.4-A1 LFR Bridge Rating Summary 13-18
Appendix 13.4-A2 LRFR Bridge Rating Summary 13-19

13.99 References 13-20

Chapter 14 Accelerated and Innovative Bridge Construction 14-1

14.1 Introduction 14-1
14.1.1 General 14-1
14.1.2 ABC Methods 14-2

14.2 Application of ABC 14-3
14.2.1 Economics of ABC 14-3
14.2.2 Practical Applications 14-3
14.2.3 Prefabricated Bridge Elements and Systems 14-4
14.2.4 Prefabricated Systems 14-7
14.2.5 Project Delivery Methods 14-8
14.2.6 Decision Making Tools 14-8

14.3 Structural Systems 14-11
14.3.1 Precast Bent System Design for High Seismic Regions 14-11
14.3.2 Geosynthetic Reinforced Soil Integrated Bridge System 14-40
14.3.3 Precast Decks 14-40

14.4 Innovative Bridge Construction 14-43
14.4.1 Self-Centering Columns 14-43
14.4.2 Shape Memory Alloy 14-44

14.5 Shipping, Handling and Erection 14-47
14.5.1 Lifting Devices 14-47
14.5.2 Handling, Storage and Shipping 14-47
14.5.3 Tolerances 14-48
14.5.4 Assembly Plans 14-48
14.5.5 Element Sizes 14-49

14.6 Installation Method Options 14-50
14.6.1 Crane Sizing 14-50
14.6.2 Lateral Sliding 14-50
14.6.3 Self-Propelled Modular Transporters 14-51

14.7 Examples of Accelerated and Innovative Bridge Construction 14-53

14.99 References 14-55

Chapter 15 Structural Design Requirements for Design-Build Contracts 15-1

15.1 Manual Description 15-1
15.1.1 Purpose 15-1
15.1.2 Specifications 15-1

15.2 Bridge Configuration Criteria 15-2
15.2.1 General 15-2
15.2.2 Railroad Crossings 15-2
15.2.3 Detour Structures 15-3
15.2.4 Inspection and Maintenance Access 15-3
15.2.5 Bridge Types 15-4
15.2.6 Aesthetic Design Elements 15-4
15.2.7 Architectural Design Standards 15-5
15.2.8 Methods 15-5
15.2.9 Design-Builder Urban Design Team 15-5
15.2.10 Analysis and Design Criteria for Structural Widenings and Modifications 15-6
15.2.11 Bridge Security 15-6

15.3 Load Criteria 15-8
15.3.1 Scope 15-8
15.3.2 Load Factors and Load Combinations 15-8
15.3.3 Permanent Loads 15-8
15.3.4 Live Loads 15-9
15.3.5 Noise Barrier Walls 15-10

15.4 Seismic Design and Retrofit 15-11
15.4.1 General 15-11
15.4.2 WSDOT Additions and Modifications to AASHTO Guide Specifications for LRFD Seismic Bridge Design 15-11
15.4.3 Seismic Design Requirements for Bridge Modifications and Widening Projects 15-21
15.4.4 Seismic Retrofitting of Existing Bridges 15-23

15.5 Concrete Structures 15-25
15.5.1 General 15-25
15.5.2 Materials 15-25
15.5.3 Design Considerations 15-27
15.5.4 Superstructures 15-28
15.5.5 Concrete Bridge Decks 15-32

15.6 Steel Structures 15-34
15.6.1 Design Considerations 15-34
15.6.2 Girder Bridges 15-36
15.6.3 Design of I-Girders 15-37
15.6.4 Plan Details 15-42

15.7 Substructure Design 15-45
15.7.1 General Substructure Considerations 15-45
15.7.2 Foundation Modeling for Seismic Loads 15-45
15.7.3 Column Design 15-47
15.7.4 Crossbeam 15-49
15.7.5 Abutment Design and Details 15-49
15.7.6 Abutment Wing Walls and Curtain Walls 15-51
15.7.7 Footing Design 15-51
15.7.8 Shafts 15-52
15.7.9 Piles and Piling 15-54
15.7.10 Concrete-Filled Steel Tubes 15-55

15.8 Walls and Buried Structures 15-56
15.8.1 Retaining Walls 15-56
15.8.2 Noise Barrier Walls. 15-59
15.8.3 Buried Structures 15-60

15.9 Bearings and Expansion Joints 15-62
15.9.1 Expansion Joints. 15-62
15.9.2 Bearings 15-67

15.10 Signs, Barriers, Bridge Approach Slabs, and Utilities 15-73
15.10.1 Sign and Luminaire Supports. 15-73
15.10.2 Bridge Traffic Barriers 15-80
15.10.3 At Grade Concrete Barriers 15-81
15.10.4 Bridge Traffic Barrier Rehabilitation 15-83
15.10.5 Bridge Railing 15-84
15.10.6 Bridge Approach Slabs 15-84
15.10.7 Traffic Barrier on Bridge Approach Slabs 15-86
15.10.8 Utilities Installed with New Construction 15-86
15.10.9 Utility Installation on Existing Bridges. 15-89
15.10.10 Resin Bonded Anchors 15-89
15.10.11 Drainage Design. 15-90

15.11 Detailing Practices 15-91
15.11.1 Standard Practices 15-91
15.11.2 Bridge Office Standard Drawings and Office Examples 15-95
15.11.3 Plan Sheets 15-95
15.11.5 Structural Steel. 15-97
15.11.6 Aluminum Section Designations 15-99
15.11.7 Abbreviations. 15-99

15.12 Bridge Load Rating. 15-100
15.12.1 General 15-100
15.12.2 Load Rating Software 15-100

15.99 References 15-101

Chapter 1 General Information Contents

1.1 Manual Description 1-1
1.1.1 Purpose 1-1
1.1.2 Specifications 1-2
1.1.3 Format 1-2
1.1.4 Revisions 1-4
1.1.5 Design Memorandums 1-4

1.2 Bridge and Structures Office Organization 1-5
1.2.1 General 1-5
1.2.2 Organizational Elements of the Bridge Office 1-5
1.2.3 Unit Responsibilities and Expertise 1-9

1.3 Roles, Responsibilities and Procedures 1-10
1.3.1 General 1-10
1.3.2 General Design Procedures 1-10
1.3.3 Design/Check Calculation File 1-17
1.3.4 PS&E Review Period 1-19
1.3.5 Addenda 1-19
1.3.6 Shop Plans and Permanent Structure Construction Procedures 1-19
1.3.7 Contract Plan Changes (Change Orders and As-Builts) 1-22
1.3.8 Archiving Design Calculations, Design Files, and S&E Files 1-24
1.3.9 Public Disclosure Policy Regarding Bridge Plans 1-26
1.3.10 Use of Computer Software 1-27

1.4 Quality Control/Quality Assurance/Quality Verification (QC/QA/QV) Procedures 1-28
1.4.1 General 1-28
1.4.2 WSDOT Prepared Bridge (or Structure) Preliminary Plans 1-28
1.4.3 WSDOT Prepared PS&E 1-29
1.4.4 Consultant Prepared PS&E/Preliminary Plans on WSDOT Right of Way 1-34
1.4.5 Structural Design Work Prepared Under Design-Build or GCCM Methods of Project Delivery 1-35

1.5 Bridge Design Scheduling 1-36
1.5.1 General 1-36
1.5.2 Preliminary Design Schedule 1-36
1.5.3 Final Design Schedule 1-36

1.6 Guidelines for Bridge Site Visits 1-39
1.6.1 Bridge Rehabilitation Projects 1-39
1.6.2 Bridge Widening and Seismic Retrofits 1-39
1.6.3 Rail and Minor Expansion Joint Retrofits 1-39
1.6.4 New Bridges 1-40
1.6.5 Bridge Demolition 1-40
1.6.6 Proximity of Railroads Adjacent to the Bridge Site 1-40

1.7 Appendices 1-41
Appendix 1.1-A1 Bridge Design Manual Revision QC/QA Worksheet 1-42
Appendix 1.3-A1 Bridge & Structures Design Calculations 1-43
Appendix 1.4-A1 QC/QA Signature Sheet 1-44

1.99 References 1-45

Chapter 1 General Information

1.1 Manual Description

1.1.1 Purpose

The *Bridge Design Manual* (BDM) M 23-50 sets the standard for bridge and structure designs within the Washington State Department of Transportation's (WSDOT) right of way. This manual outlines WSDOT design details and methods, incorporating standard practices that are based on years of experience. The BDM also identifies where WSDOT standard of practices differ from the AASHTO specifications.

The design details and design methods of the BDM shall be used in the development of any bridge or structure project within the WSDOT right of way. Adherence to the BDM is expected for all bridge or structural projects that are located within the WSDOT right of way.

The *Bridge Design Manual* is a dynamic document, which constantly changes because of the creativity and innovative skills of our bridge designers and structural detailers. It is not intended for the design of unusual structures or to inhibit the designer in the exercise of engineering judgment. The information, guidance, and references contained herein are not intended as a subsitute for experience, sound engineering judgment, and common sense.

A. Use of *Bridge Design Manual* on Design-Build Projects

When a reference is made to "*Bridge Design Manual*" or "BDM" in the Design-Build Contract or Mandatory Standards, the Design-Builder shall proceed as follows:

- Refer first to *Bridge Design Manual* Chapter 15 "Structural Design Requirements for Design-Build Contracts". All requirements in *Bridge Design Manual* Chapter 15 are Contract requirements.
- If the Design-Build Contract or a Mandatory Standard references a specific section of the *Bridge Design Manual*, the Design-Builder shall review the applicable portions of *Bridge Design Manual* Chapter 15. If there are discrepancies between *Bridge Design Manual* Chapter 15 and the specific section reference, Chapter 15 shall have contractual precedence.
- All other portions of Chapters 1-14 of the *Bridge Design Manual* shall be considered a Reference Document.

1.1.2 Specifications

This manual and the current editions of the following AASHTO Specifications are the basic documents used to design highway bridges and structures in Washington State:

- AASHTO *LRFD Bridge Design Specifications* (AASHTO LRFD)
- AASHTO *Guide Specifications for LRFD Seismic Bridge Design* (SEISMIC)

The *Bridge Design Manual* is not intended to duplicate the AASHTO Specifications. This manual supplements the AASHTO Specifications by providing additional direction, design aides, examples, and information on office practice. The *Bridge Design Manual* takes precedence where conflict exists with the AASHTO Specifications. The WSDOT Bridge Design Engineer will provide guidance as necessary.

The prescripted terms used in the BDM are defined as follows:

- The term "shall" indicates that a provision in the BDM is mandatory.
- The term "should" indicates a strong preference for a given criteria.
- The term "may" indicates a criterion that is usable, but other local and suitable documented, verified, and approved criterion may also be used in a manner consistent with the LRFD approach to bridge design.
- The term "recommended" is used to give guidance based on past experience.

References are listed at the end of each chapter.

1.1.3 Format

A. General

The *Bridge Design Manual* consists of one volume with each chapter organized as follows:

Criteria or other information (printed on white paper)

Appendix A (printed on yellow paper) Design Aids

Appendix B (printed on salmon paper) Design Examples

B. Chapters

1. General Information
2. Preliminary Design
3. Loads
4. Seismic Design and Retrofit
5. Concrete Structures
6. Structural Steel
7. Substructure Design
8. Walls and Buried Structures
9. Bearings and Expansion Joints
10. Signs, Barriers, Approach Slabs, Utilities
11. Detailing Practice
12. Quantities, Construction Costs, and Specifications
13. Bridge Load Rating
14. Accelerated and Innovative Bridge Construction

C. Numbering System

1.

The numbering system for the criteria consists of a set of numbers followed by letters as required to designate individual subjects by chapter, section, and subsection.

Example:

Chapter 5 Concrete Structures (Chapter)

5.3 Reinforced Concrete Box Girder Bridges (Section)

5.3.2 Reinforcement (Subsection)

A. Top Slab Reinforcement

1. Near Center of Span

a. Transverse Reinforcement

2. Numbering of Sheets

Each section starts a new page numbering sequence. The page numbers are located in the lower outside corners and begin with the chapter number, followed by the section number, then a hyphen and sequential page number.

Example: 5-1, 5-2, etc.

3. Appendices

Appendices are included to provide the designer with design aids (Appendix A) and examples (Appendix B). Design aids are generally standard in nature, whereas examples are modified to meet specific job requirements.

An appendix is numbered using the chapter followed by section number and then a hyphen and the letter of the appendix followed by consecutive numbers.

Example: 5.3-A1 (Box Girder Bridges) designates a design aid required or useful to accomplish the work described in Chapter 5, Section 3.

4. Numbering of Tables and Figures

Tables and figures shall be numbered using the chapter, section, subsection in which they are located, and then a hyphen followed by consecutive numbers.

Example: Figure 5.3.2-1 is the first figure found in Chapter 5, section 3, subsection 2.

1.1.4 Revisions

Revisions to this manual are related to emerging concepts, new state or federal legislation, and comments forwarded to the Bridge Design Office. Some revisions are simple spot changes, while others are major chapter rewrites. The current version of the manual is available online at: www.wsdot.wa.gov/publications/manuals/m23-50.htm.

All pages include a revision number and publication date. When a page is revised, the revision number and publication date are revised. Revisions shall be clearly indicated in the text.

The process outlined below is followed for *Bridge Design Manual* revisions:

1. Revisions are prepared, checked and coordinated with chapter authors.
2. Revisions are submitted to the Bridge Design Engineer and the FHWA WA Division Bridge Engineer for approval. However, comments related to grammar and clarity can be sent directly to the BDM Coordinator without Bridge Design Engineer or the FHWA approval.
3. After approval from the Bridge Design Engineer and FHWA, the BDM Coordinator works with WSDOT Engineering Publications to revise the manual.
4. Revised pages from Engineering Publications are checked for accuracy and corrected if necessary.
5. A Publication Transmittal is prepared by Engineering Publications. Publication Transmittals include remarks and instructions for updating the manual. After the Publications Transmittal has been signed by the State Bridge and Structures Engineer, Engineering Publications will post the complete manual and revision at: www.wsdot.wa.gov/publications/manuals/m23-50.htm.
6. Engineering Publications will coordinate electronic and hard copy distributions.

A Revision QA/QC Worksheet (see Appendix 1.1-A1) shall be prepared to document and track the revision process.

1.1.5 Design Memorandums

The WSDOT Bridge Design Engineer may issue Design Memorandums as interim updates to this manual. Active Design Memorandums supersede the *Bridge Design Manual*. Active Design Memorandums are available at: www.wsdot.wa.gov/Bridge/Structures/Memos.

Check for active Design Memorandums on a regular basis.

1.2 Bridge and Structures Office Organization

1.2.1 General

The primary responsibilities of the Bridge and Structures Office are to:

- Provides structural engineering services for WSDOT.
- Provides technical advice and assistance to other governmental agencies on such matters.

The *Design Manual* M 22-01 states the following:

> Bridge design is the responsibility of the Bridge and Structures Office in Olympia. Any design authorized at the Region level is subject to review and approval by the Bridge and Structures Office.

1.2.2 Organizational Elements of the Bridge Office

A. State Bridge and Structures Engineer

The State Bridge and Structures Engineer is responsible for structural engineering services for the department and manages staff and programs for structural design, contract plan preparation, inspections and assessments of existing bridges.

B. Bridge Design Engineer

The Bridge Design Engineer is directly responsible to the Bridge and Structures Engineer for structural design and review, and advises other divisions and agencies on such matters. The Bridge Design Engineer is responsible for assigning support of Cost Risk Assessment's, Cost Estimate Validation Process, and workshop support.

1. Structural Design Units

The Structural Design Units are responsible for the design of bridges and other structures. Design includes preparation of contract plans. The units provide special design studies, develop design criteria, check shop plans, and review designs submitted by consultants. Frequently, the Bridge Design Engineer assigns the units the responsibility for preparing preliminary bridge plans and other unscheduled work through the oversight of the Design Unit Manager.

The Design Unit Manager provides day-to-day leadership, project workforce planning, mentoring, and supervision for the design unit. The Design Unit Manager is assisted by an Assistant Supervisor who directly supervises a portion of the group and performs other tasks as delegated by the Design Unit Manager. Organization and job assignments within the unit are flexible and depend on projects underway at any particular time as well as the qualifications and experience level of individuals. The primary objective of the design units is to produce contract documents for bridges and structures within scope, schedule and budget. This involves designing, checking, reviewing, and detailing in an efficient and timely manner.

Structural Design Units include Specialists with particular areas of expertise including concrete, steel, seismic design and retrofit, and expansion joints/ bearings. The Specialists act as a resource for the Bridge Office in their specialty and are responsible for keeping up-to-date on current AASHTO criteria, new design concepts and products, technical publications, construction and maintenance issues, and are the primary points of contact for industry representatives.

The Structural Design units are also responsible for the design and preparation of contract plans for modifications to bridges in service. These include bridge rail replacement, deck repair, seismic retrofits, emergency repairs when bridges are damaged by vehicle or ship collision or natural phenomenon, and expansion joint and drainage retrofits. They review proposed plans of utility attachments to existing bridges.

2. Project Support Unit

The Bridge Projects Support Engineer directs preliminary design work, specification and cost estimates preparation and project scoping.

The Preliminary Plan Engineers are responsible for bridge project planning from initial scoping to design type, size, and location (TSL) studies and reports. They are responsible for preliminary plan preparation of bridge and walls including assembly and analysis of site data, preliminary structural analysis, cost analysis, determination of structure type, and drawing preparation. They also check preliminary plans prepared by others, review highway project environmental documents and design reports, and prepare U. S. Coast Guard Permits.

The Specifications and Estimate (S&E) Engineers develop and maintain construction specifications and cost estimates for bridge projects. They also develop specifications and cost estimates for bridge contracts prepared by consultants and other government agencies, which are administered by WSDOT. They assemble and review the completed bridge PS&E before submittal to the Regions. They also coordinate the PS&E preparation with the Regions and maintain bridge construction cost records.

In addition, the unit is responsible for updating the *Bridge Design Manual* M 23-50. The unit coordinates changes to the *Standard Specifications* and facilitates updates or revisions to WSDOT Bridge Office design standards.

3. Mega Project Bridge Manager

The Mega Project Bridge Manager provides leadership, guidance and project management responsibilities for various complex, unique and monumental bridge design and construction projects. Mega Bridge Projects are defined as suspension, cable-stayed, movable, segmental or a complex group of interchange/corridor bridges and include conventional and design-build project delivery methods. The Mega Project Bridge Manager represents the Bridge and Structures Office in Cost Estimate Validation Process activities, Value Engineering Studies and Research Projects regarding major bridge projects.

C. Bridge Preservation Engineer

The Bridge Preservation Engineer directs activities and develops programs to assure the structural and functional integrity of all state bridges in service. The Bridge Preservation Engineer directs emergency response activities when bridges are damaged.

1. Bridge Preservation Office (BPO)

The Bridge Preservation Office is responsible for planning and implementing an inspection program for the more than 3,200 fixed and movable state highway bridges, sign bridges and cantilever sign structures. In addition, BPO provides inspection services on some local agency bridges and on the state's ferry terminals. All inspections are conducted in accordance with the National Bridge Inspection Standards (NBIS).

BPO maintains the computerized Washington State Bridge Inventory System (WSBIS) of current information on more than 7,300 state, county, and city bridges in accordance with the NBIS. This includes load ratings for all bridges. BPO prepares a *Bridge List* of the state's bridges, which is published every two years, maintains the intranet-based Bridge Engineering Information System (BEIST), and prepares the annual Recommended Bridge Repair List (RBRL) based on the latest inspection reports for state owned structures.

BPO is responsible for the bridge load rating and risk reduction (Scour) programs. It provides damage assessments and emergency response services when bridges are damaged because of vehicle or ship collision or natural phenomenon such as: floods, wind, or earthquakes.

D. Bridge Asset Management Engineer

The Bridge Asset Management Engineer is responsible for the program development, planning and monitoring of all statewide bridge program activities. These include Structures Preservation - P2 program funded bridge replacements and rehabilitation, bridge deck protection, major bridge repair, and bridge painting.

The Bridge Asset Management Engineer supervises the Construction Support Unit, the Bridge Archiving Engineer, the Bridge Scheduling Engineer, the Computer Support Unit, the Consultant Liaison Engineer, Bridge Deck Management Engineer, and the Seismic and Scour Programs Engineer.

The Construction Support Unit Engineers are responsible for checking the contractor's falsework, shoring, and forming plans. Shop plan review and approval are coordinated with the design units. Actual check of the shop plans is done in the design unit. Field requests for plan changes come through this office for a recommendation as to approval.

The Bridge Archive Engineer processes as-built plans in this unit. Region Project Engineers are responsible for preparing and submitting as-built plans at the completion of a contract.

The Scheduling Engineer monitors the design work schedule for the Bridge and Structures Office, updates the Bridge Design Schedule (BDS) and maintains records of bridge contract costs. Other duties include coordinating progress reports to Regions by the Unit Supervisors and S&E Engineers through the Project Delivery Information System (PDIS).

The Computer Support Unit is responsible for computer resource planning and implementation, computer user support, liaison with Management Information Systems (MIS), computer aided engineer operation support, and software development activities. In addition, the unit works closely with the Bridge Project Support Unit in updating this manual and *Standard Plans*.

The Consultant Liaison Engineer prepares bridge consultant agreements and coordinates consultant PS&E development activities with those of the Bridge Office. The Consultant Liaison Engineer negotiates bridge design contracts with consultants.

In addition, the Bridge Asset Management Engineer manages the bridge deck protection, deck testing and the bridge research programs. It is responsible for the planning, development, coordination, and implementation of new programs (e.g., Seismic Retrofit and Preventative Maintenance), experimental feature projects, new product evaluation, and technology transfer.

The Bridge Asset Management Engineer is the Bridge and Structures Office's official Public Disclosure contact. (See Section 1.3.9 Public Disclosure Policy Regarding Bridge Plans).

E. State Bridge and Structures Architect

The State Bridge and Structures Architect is responsible for reviewing and approving bridge preliminary plans, retaining walls, preparing renderings, coordinating aesthetic activities with Regions (i.e. suggesting corridor themes and approving public art), and other duties to improve the aesthetics of our bridges and structures. The State Bridge and Structures Architect works closely with bridge office and region staff. During the design phase, designers should get the Architect's approval for any changes to architectural details shown on the approved preliminary plan.

F. Staff Support Unit

The Staff Support Unit is responsible for many support functions, such as: typing, timekeeping, payroll, receptionist, vehicle management, mail, inventory management, and other duties requested by the Bridge and Structures Engineer. Other duties include: filing field data, plans for bridges under contract or constructed, and design calculations. This unit also maintains office supplies and provides other services.

G. Office Administrator

The Office Administrator is responsible for coordinating personnel actions, updating the organizational chart, ordering technical materials, and other duties requested by the Bridge and Structures Engineer. Staff development and training are coordinated through the Office Administrator. The Office Administrator also handles logistical support, office and building maintenance issues.

1.2.3 Unit Responsibilities and Expertise

The following is an updated summary of the structural design, review and plan preparation responsibilities/expertise within the Bridge Design Section. Contact the Unit Supervisor for the name of the appropriate staff expert for the needed specialty.

Unit Supervisor	Responsibility/Expertise
Mike Bauer	Coast Guard Permits Special Provisions and Cost Estimates Preliminary Design *Bridge Design Manual* M 23-50 Bridge Traffic Barriers and Rail Retrofits
Richard Stoddard	Concrete Design Technical Support Seismic Design Technical Support
Richard Zeldenrust	Overhead and Bridge-Mounted Sign Structures Light Standard & Traffic Signal Supports Repairs to Damaged Bridges Structural Steel Technical Support Emergency Slide Repairs Retaining Walls (including Structural Earth, Soldier Pile and Tie-Back, Geosynthetic, and Soil Nail) Pre-Approval of Retaining Wall Systems Noise Barrier Walls Bearing and Expansion Joints
DeWayne Wilson	Bridge Preservation Program (P2 Funds) – Establish needs and priorities (Seismic, Scour, Deck Overlay, Special Repairs, Painting, Replacement, Misc Structures Programs) Bridge Management System Bridge Projects Scheduling Bridge Engineering Software and CAD **Construction Support including** Falsework, Forming and Temporary Structures Consultant Liaison
Tim Moore	Mega Projects Manager
Paul Kinderman	State Bridge & Structures Architect

1.3 Roles, Responsibilities and Procedures

1.3.1 General

1.3.2 General Design Procedures

A. PS&E Prepared by WSDOT Bridge and Structures Office

1. Design Team

The design team usually consists of the Designer(s), Checker(s), Structural Detailer(s), Bridge & Structures Architect, and a Specification and Estimate Engineer, who are responsible for preparing a set of contract documents on or before the scheduled due date(s) and within the budget allocated for the project. On large projects, the Design Unit Manager may designate a designer to be a Project Coordinator with additional duties, such as: assisting the Design Unit Manager in communicating with the Region, coordinating and communicating with the Geotechnical Branch, and monitoring the activities of the design team.

In general, it is a good practice to have some experienced designers on every design team. All design team members should have the opportunity to provide input to maximize the quality of the design plans.

2. Designer Responsibility

The designer is responsible for the content of the contract plan sheets, including structural analysis, completeness and correctness. A good set of example plans, which is representative of the bridge type, is indispensable as an aid to less experienced designers and detailers.

During the design phase of a project, the designer will need to communicate frequently with the Design Unit Manager and other stakeholders. This includes acquiring, finalizing or revising roadway geometrics, soil reports, hydraulics recommendations, and utility requirements. Constructability issues may also require that the designer communicate with the Region or Construction Office. The designer may have to organize face-to-face meetings to resolve constructability issues early in the design phase. The bridge plans must be coordinated with the PS&E packages produced concurrently by the Region.

The designer shall advise the Design Unit Manager as soon as possible of any scope and project cost increases and the reasons for the increases. The Design Unit Manager will then notify the Region project office if the delivery schedule will have to be changed. If Region concurs with a change in the delivery date, the Design Unit Manager shall notify the Bridge Scheduling Engineer of the revised delivery dates.

The designer or Project Coordinator is responsible for project planning which involves the following:

a. Determines scope of work, identifies tasks and plans order of work.

b. Prepare design criteria that are included in the front of the design calculations. Compares tasks with BDM office practice and AASHTO *Bridge Design Specifications*.

   i. Insures that design guidelines are sufficient.

ii. Provides justification for any deviation from AASHTO *Bridge Design Manual*.

iii. Provides justification for design approach.

iv. Provides justification for any deviation from office practices regarding design and details.

v. Other differences.

c. Meet with the Region design staff and other project stakeholders early in the design process to resolve as many issues as possible before proceeding with final design and detailing.

d. Identify coordination needs with other designers, units, and offices.

e. Early in the project, the bridge sheet numbering system should be coordinated with the Region design staff. For projects with multiple bridges, each set of bridge sheets should have a unique set of bridge sheet numbers.

f. At least monthly or as directed by the Design Unit Manager:

i. Update Project Schedule and List of Sheets.

ii. Estimate percent complete.

iii. Estimate time to complete.

iv. Work with Design Unit Manager to adjust resources, if necessary.

g. Develop preliminary quantities for all cost estimates after the Preliminary Plan stage.

h. Near end of project:

i. Develop quantities, *Not Included in Bridge Quantity List, and Special Provisions Checklist* that are to be turned in with the plans. (See Section 12.4.4).

ii. Prepare the Bar List.

iii. Coordinate all final changes, including review comments received from the Bridge Specifications and Estimates Engineer.

iv. Meet with Region design staff and other project stakeholders at the constructability review/round table review meetings to address final project coordination issues.

The designer should inform the Design Unit Manager of any areas of the design, which should receive special attention during checking and review.

The design calculations are prepared by the designer and become a very important record document. Design calculations will be a reference document during the construction of the structure and throughout the life of the structure. It is critical that the design calculations be user friendly. The design calculations shall be well organized, clear, properly referenced, and include numbered pages along with a table of contents. The design and check calculations shall be bound and archived in accordance with Section 1.3.8. The bound calculations shall be stamped, signed, and dated

by a registered professional Engineer in the State of Washington and shall follow the WSDOT Bridge and Structures office's policy for stamping of plan sheets in accordance with Section 1.4.3.A.7. Computer files shall be archived for use during construction, in the event that changed conditions arise.

The designer or another assigned individual is also responsible for resolving construction problems referred to the Bridge Office during the life of the contract. These issues will generally be referred through the Bridge Technical Advisor, the Design Unit Manager, the Construction Support Unit, or the HQ Construction-Bridge.

3. Structural Detailer Responsibility

The structural detailer is responsible for the quality and consistency of the contract plan sheets. The structural detailer shall ensure that the Bridge Office drafting standards as explained in Chapter 11 are upheld.

a. Refer to Chapter 11, for detailing practices.

b. Provide necessary and adequate information to ensure the contract plans are accurate, complete, and readable.

c. Detail plan sheets in a consistent manner and follow accepted detailing practices.

d. Check plans for geometry, reinforcing steel congestion, consistency, and verify control dimensions.

e. Check for proper grammar and spelling.

f. On multiple bridge contracts, work with the Designer/Project Coordinator to ensure that the structural detailing of all bridges within the contract shall be coordinated to maximize consistency of detailing from bridge to bridge. Extra effort will be required to ensure uniformity of details, particularly if multiple design units and/or consultants are involved in preparing bridge plans.

g. Maintain an ongoing understanding of bridge construction techniques and practices.

4. Specialist Responsibility

All bridge and wall projects initiated with a signed Bridge Preliminary Plan.

The primary responsibility of the specialist is to act as a knowledge resource for the Bridge and Structures Office, WSDOT, other governmental agencies and consultants. Designers are encouraged to consult specialists for complex projects early in the design process. Design Unit Managers overseeing a design project should actively identify any complex or unusual features, early in the design process, and encourage the designers involved to seek input from the suitable Specialist. The Specialists maintain an active knowledge of their specialty area, along with a current file of products and design procedures. The Specialists maintain industry contacts. Specialists provide training in their area of expertise.

Specialists are expected to remain engaged with the design efforts being carried out in the office related to their specialty. At the discretion of the Design Unit Manager, the Specialists may be requested to review, comment on and initial plans in their area of expertise prepared by other designers. Specialists are expected to review selected design work for consistency with other WSDOT projects, and for adherence to current office practice and current industry practice.

Specialists assist the Bridge and Structures Engineer in reviewing and voting on amendments to AASHTO specifications.

Specialists are responsible for keeping their respective chapters of the *Bridge Design Manual* M 23-50 up to date.

The Concrete and Steel specialist act as Design Unit Managers for the Structural Detailers within their unit. They are responsible for the day-to-day supervision of the Structural Detailers, including timesheet and evaluation responsibilities. The Concrete and Steel Specialists are also relied upon to assist the Design Unit Manager in allocating detailing staff, and completing Structural Detailer staffing projections.

A secondary responsibility of the Concrete and Steel Specialist is to serve as Design Unit Manager when the Design Unit Manager is absent.

Sign Structure design, Wall design, and Traffic Barrier & Rail design are three specialty areas where design and review work has traditionally been directed to dedicated staff in each of the three main design groups within the Bridge Design Office (see Section 1.2.3). Design guidance or review requests for unusual or unique projects involving these three specialty areas should be directed to the applicable Design Unit Manager for design or review.

5. Specification and Estimating Engineer Responsibilities

The S&E Engineer is responsible for compiling the PS&E package for bridge and/or related highway structural components. This PS&E package includes Special Provisions (Bridge Special Provisions or BSPs and General Special Provisions or GSPs as appropriate), construction cost estimate, construction working day schedule, test hole boring logs and other appendices as appropriate, and the design plan package.

The S&E Engineer is also responsible for soliciting, receiving, compiling and turning over to the designer all review comments received after the Bridge Plans turn-in. It is imperative that all review comments are channeled through the S&E Engineer to ensure consistency between the final bridge plans, specifications and estimate.

For a detailed description of the S&E Engineer's responsibilities, see Section 12.4.

6. Design Unit Manager Responsibility

a. The Design Unit Manager is responsible to the Bridge Design Engineer for the timely completion and quality of the bridge plans.

b. The Design Unit Manager works closely with the Project Coordinator and the design team (designer, checker, and structural detailer) during the design and plan preparation phases to help avoid major changes late in the design process. Activities during the course of design include:

i. Evaluate the complexity of the project and the designer's skill and classification level to deliver the project in a timely manner. Determine both the degree of supervision necessary for the designer and the amount of checking required by the checker.

ii. Assist the design team in defining the scope of work, identifying the tasks to be accomplished and developing a project work plan.

iii. Make suitable staffing assignments and develop a design team time estimate to ensure that the project can be completed on time and within budget.

iv. Review and approve design criteria before start of design.

vi. Help lead designer conduct face-to-face project meetings, such as: project "kick-off" and "wrap-up" meetings with Region, geotechnical staff, bridge construction, and consultants to resolve outstanding issues.

vii. Participate in coordinating, scheduling, and communicating with stakeholders, customers, and outside agencies relating to major structural design issues.

vii. Facilitate resolution of major project design issues.

viii. Assist the design team with planning, anticipating possible problems, collectively identifying solutions, and facilitating timely delivery of needed information, such as geometrics, hydraulics, foundation information, etc.

ix. Interact with design team regularly to discuss progress, problems, schedule and budget, analysis techniques, constructability and design issues. Always encourage forward thinking, innovative ideas and suggestions for quality improvement.

x. Arrange for and provide the necessary resources, time and tools for the design team to do the job right the first time. Offer assistance to help resolve questions or problems.

xi. Help document and disseminate information on special features and lessons learned for the benefit of others and future projects.

xii. Mentor and train designers and detailers through the assignment of a variety of structure types.

c. The Design Unit Manager works closely with the design team during the plan review phase. Review efforts should concentrate on reviewing the completed plan details and design calculations for completeness and for agreement with office criteria and office practices. Review the following periodically and at the end of the project:

   i. Design Criteria
      - Seismic design methodology, acceleration coefficient ("a" value), and any seismic analysis assumptions.
      - Foundation report recommendations, selection of alternates.
      - Deviations from AASHTO, this manual and proper consideration of any applicable Design Memorandums.

   ii. Design Time and Budget

d. Estimate time to complete the project. Plan resource allocation for completing the project to meet the scheduled Ad Date and budget. Monitor monthly time spent on the project.

   Plan and assign workforce to ensure a timely delivery of the project within the estimated time and budget. At monthly Design Unit Managers' scheduling meetings, notify the Bridge Project Support Engineer if a project is behind schedule.

e. Advise the Region of any project scope creep and construction cost increases. As a minimum, use quarterly status reports to update Region on project progress.

f. Use appropriate computer scheduling software or other means to monitor time usage, to allocate resources, and to plan projects.

g. Review constructability issues. Are there any problems unique to the project?

7. Bridge Design Engineer's Responsibilities

The Bridge Design Engineer is the coach, mentor, and facilitator for the WSDOT Bridge Design Procedure. The leadership and support provided by this position is a major influence in assuring quality for structural designs performed by both WSDOT and consultants. The following summarizes the key responsibilities of the Bridge Design Engineer:

a. Prior to the Bridge Design Engineer stamping and signing any plans, he/she shall perform a structural/constructability review of the plans. This action is consistent with the "responsible charge" requirements of state laws relating to Professional Engineers.

b. Review and approve the Preliminary Bridge Plans. The primary focus for this responsibility is to assure that the most cost-effective and appropriate structure type is selected for a particular bridge site.

c. Review unique project special provisions and *Standard Specifications* M 41-10 modifications relating to structures.

d. Facilitate partnerships between WSDOT, consultants, and the construction industry stakeholders.

e. Encourage designer creativity and innovation through forward thinking.

f. Exercise leadership and direction for maintaining a progressive and up to date *Bridge Design Manual* M 23-50.

g. Create an open and supportive office environment in which Design Section staff are empowered to do high quality structural design work.

h. Create professional growth opportunities through an office culture where learning is emphasized.

i. Encourage continuing professional development through training opportunities, attendance at seminars and conferences, formal education opportunities, and technical writing.

8. Consultant PS&E — Projects on WSDOT Right of Way

WSDOT Consultant Liaison Engineer's Responsibilities

a. Review scope of work.

b. Negotiate contract and consultant's Task Assignments.

c. Coordinate/Negotiate Changes to Scope of Work.

9. Bridge Scheduling Engineer Responsibilities

a. Add review to the bridge schedule.

b. Assign review to a Design unit.

c. Make 2 copies of the review plans and specifications – 1 for the design reviewer and 1 for the Specifications Engineer reviewer

d. Make a copy of the Layout for the Bridge Inventory Engineer.

10. WSDOT Design Reviewer's or Coordinator's Responsibilities

a. Early in the project, review consultant's design criteria, and standard details for consistency with WSDOT practices and other bridge designs in project.

b. Review the job file as prepared by the Preliminary Plan Engineer.

c. Identify resources needed to complete work.

d. Initiate a project start-up meeting with the Consultant to discuss design criteria, submittal schedule and expectations, and also to familiarize himself/herself with the Consultant's designers.

e. Reach agreement early in the design process regarding structural concepts and design methods to be used.

f. Identify who is responsible for what and when all intermediate constructability, Bridge Plans, and Bridge PS&E review submittals are to be made.

g. Monitor progress.

h. Facilitate communication, including face-to-face meetings.

i. Resolve differences.

11. **WSDOT Design Unit Manager's Responsibilities**

    a. Encourage and facilitate communication.

    b. Early involvement to assure that design concepts are appropriate.

    c. Empower Design Reviewer or Coordinator.

    d. Facilitate resolution of issues beyond authority of WSDOT Reviewer or Coordinator.

    e. Facilitate face-to-face meetings.

12. WSDOT S&E Engineer's Responsibilities

See Section 12.4.8.

13. WSDOT Bridge Design Engineer's Responsibilities

The WSDOT Bridge and Structure's Bridge Design Engineer shall preform a cursory review of design plans.

B. Consultant PS&E

Projects on County and City Right of Way

Counties and cities frequently hire Consultants to design bridges. WSDOT Local Programs Office determines which projects are to be reviewed by the Bridge and Structures Office.

WSDOT Local Programs Office sends the PS&E to the Bridge Project Support unit for assignment when a review is required. The Bridge and Structures Office's Consultant Liaison Engineer is not involved.

A WSDOT Bridge and Structures Office Design Reviewer or Coordinator will be assigned to the project and will review the project as outlined for Consultant PS&E Projects on WSDOT Right of Way (see Section 1.3.2.B).

Two sets of plans with the reviewers' comments marked in red should be returned to the Bridge Project Support Unit. One set of plans will be returned to Local Programs Office.

The first review should be made of the Preliminary Plan followed later by review of the PS&E and design calculations. Comments are treated as advisory, although major structural issues must be addressed and corrected. An engineer from the county, city, or consultant may contact the reviewer to discuss the comments.

1.3.3 Design/Check Calculation File

A. File of Calculations

The Bridge and Structures Office maintains the archiving process for all pertinent design/check calculations for documentation and future reference. (See Section 1.3.8 Archiving Design Calculations, Design Files, and S&E Files).

B. Procedures

After an assigned project is completed and the project is awarded, the designer shall turn in a bound file containing the design/check calculations for archiving. The front cover should have a label (See Figure 1.3.8-1).

C. File Inclusions

The following items should be included in the file:

1. Index Sheets

Number all calculation sheets and prepare an index by subject with the corresponding sheet numbers.

List the name of the project, SR Number, designer/checker initials, date (month, day, and year), and Design Unit Manager's initials.

2. Design Calculations

The design calculations should include design criteria, design assumptions, loadings, structural analysis, one set of moment and shear diagrams and pertinent computer input and output data (reduced to 8½″ by 11″ sheet size).

The design criteria, design assumptions, and special design features should follow in that order behind the index.

Computer-generated design calculations may be used instead of longhand calculations. The calculation sheets shall be formatted similar to WSDOT standard calculation sheets (WSDOT Form 232-007) for longhand designs. The header for electronic calculation sheets shall carry WSDOT logo along with project name, S.R. number, designer and checker's name, date, supervising engineer, and sheet numbers.

All computer-generated or longhand design calculations shall be initialed by the designer and checker. Checker's initial may not be necessary if separate check calculations are provided.

Output from commercial software shall be integrated into design calculations with a cover sheet that includes the WSDOT logo along with project name, S.R. number, designer and checker's name, date, supervising engineer, and sheet numbers.

Consultant submitted design calculations shall comply with the above requirements.

Design calculations prepared by the Bridge Design Office or Consultants shall be sealed and signed by the Engineer of Record. Design calculations are considered part of the process that develops contract plans which are the final documents.

See Appendix 1.5-A2 for examples of Excel template for computer-generated design calculations. Code and other references used in developing calculations shall be specified. In general, when using Excel spreadsheet, enough information and equations shall be provided/shown in the spreadsheet so that an independent checker can follow the calculations.

3. Special Design Features

Brief narrative of major design decisions or revisions and the reasons for them.

4. **Construction Problems or Revisions**

   Not all construction problems can be anticipated during the design of the structure; therefore, construction problems arise during construction, which will require revisions. Calculations for revisions made during construction should be included in the design/check calculation file when construction is completed.

D. File Exclusions

The following items should not be included in the file:

1. Irrelevant computer information.
2. Prints of Office Standard Sheets.
3. Irrelevant sketches.
4. Voided sheets.
5. Preliminary design calculations and drawings unless used in the final design.
6. Test hole logs.

1.3.4 PS&E Review Period

See Section 12.4.10 for PS&E Review Period and Turn-in for AD Copy activities.

1.3.5 Addenda

Plan or specification revisions during the advertising period require an addendum. The Specifications and Estimate Engineer will evaluate the need for the addendum after consultation with the HQ Construction – Bridge, Region, and Region Plans Branch. The Bridge Design Engineer or the Design Unit Manager must initial all addenda.

For addenda to contract plans, obtain the original drawing from the Bridge Archive Engineer. Use shading or clouding to mark all changes (except deletions) and place a revision note at the bottom of the sheet (Region and HQ Plans Branch jointly determine addendum date) and a description of the change. Return the 11″ by 17″ signed original and copy to the Specifications and Estimate Engineer who will submit the copy to the HQ Plans Branch for processing. See Chapter 12 for additional information.

For changes to specifications, submit a copy of the page with the change to the Specifications and Estimate Engineer for processing.

1.3.6 Shop Plans and Permanent Structure Construction Procedures

This section pertains to fabrication shop plans, weld procedures, electrical and mechanical items, geotechnical procedures, such as: drilled shafts and tieback walls, and other miscellaneous items related to permanent construction.

The following is a guide for checking shop plans and permanent structure construction procedures.

A. Bridge Shop Plans and Procedures

1. Mark one copy of each sheet with the following, near the title block, in red pen or with a rubber stamp:

Contract number

Checker's initials and Date

Review Status

- No Exceptions Taken
- Make Corrections Noted
- Revise and Resubmit
- Rejected

2. On the Bridge Office copy, mark with red pen any errors or corrections. Yellow shall be used for highlighting the checked items. Comments made with red pen, especially for 8½″ by 11″ or 11″ by 17″ size sheets shall be clear, neat, and conducive to being reproduced by Xerox. These comments should be "bubbled" so they stand out on a black and white Xerox copy. Use of large sheets should be discouraged because these require extra staff assistance and time to make these copies by hand.

3. Items to be checked are typically as follows

Check against Contract Plans and Addenda, Special Provisions, Previously Approved Changes and *Standard Specifications* M 41-10.

a. Material specifications (ASTM specifications, hardness, alloy and temper, etc.).

b. Size of member and fasteners.

c. Length dimensions, if shown on the Contract Plans.

d. Finish (surface finish, galvanizing, anodizing, painting, etc.).

e. Weld size and type and welding procedure if required.

f. Strand or rebar placement, jacking procedure, stress calculations, elongations, etc.

g. Fabrication — reaming, drilling, and assembly procedures.

h. Adequacy of details.

i. Erection procedures.

For prestressed girders and post-tensioning shop plan review see Sections 5.6.3.A and 5.8.6.C respectively.

4. Items Not Requiring Check

a. Quantities in bill of materials.

b. Length dimensions not shown on Contract Plans except for spot checking and is emphasized by stamping the plans: *Geometry Not Reviewed by the Bridge and Structures Office.*

5. Marking Copies

When finished, mark the sheets with one of six categories in red pen, lower right corner.

a. "No Exceptions Taken" No Corrections required.

b. “Make Corrections Noted”

Minor corrections only. Do not place written questions on an approved as noted sheet. No resubmittal required if noted corrections are made.

c. “Revise and Resubmit”

Major corrections are required which requires a complete resubmittal. Written questions may be included.

d. “Rejected”

Not acceptable, or does not meet the contract requirements. Complete resubmittal required.

e. “Structurally Acceptable”

This is appropriate for items that are not required to be reviewed per the contract, such as: work platforms, submittals from various local agencies or developers, and other items that are reviewed as a courtesy.

f. “Structurally Acceptable But Does Not Conform to the Contract Requirements”

This is appropriate when a deviation from the contract is found but is determined to be structurally acceptable.

If in doubt between “Make Corrections Noted” and “Revise and Resubmit”, check with the Design Unit Manager or Construction Support Engineer. An acceptable detail may be shown in red, in which case the Plans would be marked. “*Make Corrections Noted*”.

Notify the Construction Support Engineer if there are any structurally acceptable deviations to the contract plans. The Construction Support Engineer will notify both the Region Project Engineer and HQ Construction Engineer assigned to the project, who may have to approve a change order and provide justification for the change order.

Notify the Design Unit Manager and the Construction Support Engineer if problems are encountered which may cause a delay in the checking of the shop plans or completion of the contract. Typically, WSDOT administered contracts require reviews to be completed within 30 days. The review time starts when the Project Engineer first receives the submittal from the Contractor and ends when the Contractor has received the submittal back

from the Project Engineer. The Bridge Office does not have the entire 30-day review period to complete the review. Therefore, designers should give construction reviews high priority and complete reviews in a timely manner so costly construction delays are avoided. Time is also required for marking, mailing and other processing. It is the goal of the Bridge and Structures Office to return reviewed submittals back to the Project Engineer within 7 to 14 days of their receipt by the Bridge Construction Support Unit.

Return all shop drawings and Contract Plans to the Construction Support Unit when checking is completed. Include a list of any deviations from the Contract Plans that are allowed and a list of any disagreements with the Project Engineer's comments (regardless of how minor they may be).

If deviations from the Contract Plans are to be allowed, a Change Order may be required. Alert the Construction Support Unit so that their transmittal letter may inform the Region and the HQ Construction Engineer assigned to the project.

Under no circumstances should the reviewer mark on the shop plans that a change order is required or notify the Project Engineer that a change order is required. The authority for determining whether a change order is required rests with HQ Construction Engineer assigned to the project.

B. Sign Structure, Signal, and Illumination Shop Plans

In addition to the instructions described under Section 1.3.6.A, the following instructions apply:

1. Review the shop plans to ensure that the pole sizes conform to the Contract Plans. Determine if the fabricator has supplied plans for each pole or type of pole called for in the contract.
2. Manufacturer's details may vary slightly from contract plan requirements, but must be structurally adequate to be acceptable.

C. Geotechnical Submittals

The Bridge Office and the Geotechnical Services Branch concurrently review these submittals which may include special design proprietary retaining walls, drilled shafts, ground anchors, and soldier piles. HQ Construction Office is included for the review of drilled shaft installation plans. The Construction Support Unit combines these comments and prepares a unified reply that is returned to the Project Engineer.

1.3.7 Contract Plan Changes (Change Orders and As-Builts)

A. Request for Changes

The following is intended as a guide for processing changes to the design plans after a project has been awarded.

For projects which have been assigned a Bridge Technical Advisor (BTA), structural design change orders can be approved at the Project Engineer's level provided the instructions outlined in the *Construction Manual* M 41-01 are followed.

For all other projects, all changes are to be forwarded through the Construction Support Unit, which will inform the HQ Construction Engineer - Bridge.

Responses to inquiries should be handled as follows:

1. **Request by Contractor or Supplier**

   A designer, BTA, or Design Unit Manager contacted directly by a contractor/supplier may discuss a proposed change with the contractor/supplier, but shall clearly tell the contractor/supplier to formally submit the proposed change though the Project Engineer and that the discussion in no way implies approval of the proposed change. Designers are to inform their Design Unit Manager if they are contacted.

2. **Request From the Region Project Engineer**

   Requests for changes directly from the Project Engineer to designer or the Design Unit Manager should be discouraged. The Project Engineer should contact HQ Construction - Bridge, who in turn will contact the designer or Design Unit Manager if clarification is needed regarding changes. The Construction Support Unit should be informed of any changes.

3. **Request From the Region Construction Engineer**

   Requests from the Region Construction Engineer are to be handled like requests from the Region Project Engineer.

4. **Request From the HQ Construction – Bridge**

   Requests for changes from HQ Construction Engineer assigned to the project are usually made through the Construction Support Unit and not directly to the Design Unit. However, sometimes, it is necessary to work directly with the Design Unit. The Construction Support Unit should be informed of any decisions made involving changes to the Contract Plans.

5. **Request From the Design Unit**

   Request for changes from the Design Unit due to plan errors or omissions shall be discussed with the Design Unit Manager prior to revising and issuing new plan sheets.

B. Processing Contract Revisions

Changes to the Contract Plans or Specifications subsequent to the award of the contract may require a contract plan revision. Revised or additional plan sheets, which clearly identify the change on the plans, may be needed. When a revision or an additional drawing is necessary, request the original plan sheets from the Construction Support Unit's Bridge Archive Engineer and prepare revised or new original plan sheets.

Sign, date, and send the new plan sheets to the Bridge Archive Engineer, to HQ Construction Engineer assigned to the project, and to the Construction Support Unit. The Designer is responsible for making the prints and distributing them.

This process applies to all contracts including HQ Ad and Award, Region Ad and Award, or Local Agency Ad and Award.

Whenever new plan sheets are required as part of a contract revision, the information in the title blocks of these sheets must be identical to the title blocks of the contract they are for (e.g., Job Number, Contract No., Approved by, and the Project Name). These title blocks shall also be initialed by the Bridge Design Engineer, Design Unit Manager, designer, and reviewer before they are distributed. If the changes are modifications made to an existing sheet, the sheet number will remain the same. A new sheet shall be assigned the same number as the one in the originals that it most closely resembles and shall be given a letter after the number (e.g., if the new sheet applies to the original sheet 25 of 53, then it will have number 25A of 53). The Bridge Plans Engineer in the Construction Support Unit shall store the 11″ by 17″ original revision sheets.

Every revision will be assigned a number, which shall be enclosed inside a triangle. The assigned number shall be located both at the location of the change on the sheet and in the revision block of the plan sheet along with an explanation of the change.

Any revised sheets shall be sent to HQ Construction-Bridge with a written explanation describing the changes to the contract, justification for the changes, and a list of material quantity additions or deletions.

C. As-Built Plan Process

For more information on the as-built plan process for bridges, see the *As-Built Plans Manual*, prepared by the Bridge and Structures Office, dated August 2003. Copies are available from the Bridge Archive Engineer.

1.3.8 Archiving Design Calculations, Design Files, and S&E Files

A. Upon Award of the Project

The designer and checker will place a job file cover label on the bound design and check calculations folder (see Figure 1.3-8.1). The designer shall then turn these in to the Design Unit Manager or the assigned Project Coordinator.

The Unit Design Unit Manager or Project Coordinator shall turn in the bound project design calculations and check calculations to the Bridge Archive Engineer.

The S&E Engineer is required to give the Bridge Archive Engineer the signed plan sheets, job file, and S&E file.

Files will be placed in a temporary storage space marked as “Design Unit Document Temporary Storage”. These cabinets will be locked, and only the Bridge Archive Engineer, the Scheduling Engineer, and the Office Administrator will have keys to them. The Design Files, S&E Files, and Design Calculations are organized by the contract number.

A Bridge and Structures staff member may access the Design Files, S&E Files, or Design Calculations by requesting the files from the Bridge Archive Engineer or the Scheduling Engineer, who will check out the files and note the date and person’s name. If a person other than a Bridge and Structures Office staff member requests these documents, the approval of the Bridge Design Engineer or Bridge Asset Management Engineer will be required for release of the documents.

SR # _____ County _____ CS # _____

Bridge Name _____

Bridge # _____ Contract # _____

Contents _____

Designed by _____ Checked by _____

Archive Box # _____ Vol. #_____

Cover Label
Figure 1.3.8-1

B. Upon the Physical Contract Completion

The designer will update the bound calculation file with any contract plan changes that have occurred during construction.

C. Nine Months After Physical Completion of the Contract

The Bridge Archive Engineer will place all reports, signed and stamped special provisions, and bound design and check calculations in an archiving box and send the documents to the Office of Secretary of State for archive storage, except as otherwise approved by the Bridge Design Engineer.

The Bridge Archive Engineer will maintain a record of the documents location and archive status.

D. Consultant Designs

Prior to Ad, the Bridge and Structures office plan reviewer of a Consultant design shall request the following from the design Consultant:

1. The bound project design calculations in paper form.
2. The signed and stamped structural plan sheets.

This request shall go through either the Bridge and Structures office's Consultant Liaison or the Region Project Engineering office.

These documents shall be sent in the mail to the address shown in *Standard Specifications* Section 6-02.3(16)A but shall be directed to the Bridge office PS&E Engineer. The Bridge office PS&E Engineer will then give these documents to the Bridge Archive Engineer.

All Consultant Ad Ready signed and stamped plan sheets and calculations need to be received by the Bridge office on later than two weeks prior to the Ad date.

E. Design-Build Projects

The Design-Builder shall follow the requirements of the RFP for submission of the signed and stamped structural plan sheets and bound calculations.

1.3.9 Public Disclosure Policy Regarding Bridge Plans

The Bridge Management Engineer is the Bridge and Structures Office's official Public Disclosure contact and shall be contacted for clarification and/or direction.

Executive Order E 1023 *Public Disclosure* provides a specific procedure to follow when there is a request for public records.

The Bridge and Structures Office is the "owner" of only two types of "official" records: (1) Design Calculations (until they are turned over to the State Archives Office) and (2) Bridge Inspection Documents.

No records will be disclosed without a written request. This request is to be specific.

As-built plans available on the Bridge and Structures website are not "official" as-built plans. The Regions are the owners of the "official" as-built plans and the procedure for providing requested copies of these plans is similar to the procedure outlined above with the following modifications:

- If you receive a written or verbal request for a set of plans from a person indirectly working for WSDOT (i.e. contractor, consultant), advise them to contact and request the plans from the WSDOT Project Engineer.
- If the request comes from a person directly working on a Bridge Office project as an on-call consultant, have them contact and request the plans from the Bridge and Structures Office's Consultant Liaison Engineer.
- If the request comes from a person not working for WSDOT, they must submit their written request to the person and address noted below and it will be forwarded to the appropriate Region to provide the requested documents.

  Written requests must be sent to:

  Records and Information Service Office
  Washington State Department of Transportation
  310 Maple Park Avenue
  P.O. Box 47410
  Olympia, WA 98504-7410

  Email requests must be sent to:

  publicdisclosurerequests@wsdot.wa.gov

1.3.10 Use of Computer Software

A. Protection of Intellectual Property

Many of the software tools used by the Bridge and Structures Office are licensed from commercial software vendors. WSDOT is committed to using these tools only as allowed by law and as permitted by software license. WSDOT employees shall comply with the terms and conditions of all licensing agreements and provisions of the Copyright Act and other applicable laws.

B. Policy on Open Source Software

It is the policy of the Bridge and Structures Office to license its own engineering software as open source, and to prefer and promote the use of open source software, within the bridge engineering community.

To support this policy on open source bridge engineering software, the Bridge and Structures Office is a founding and participating member of the Alternate Route Project. The purpose of the Alternate Route Project is to serve as a focal point for the collaborative and cooperative development of open source bridge engineering software tools.

C. Approved Software Tools

A list of approved software tools available for use by WSDOT bridge design engineers is available at www.wsdot.wa.gov/eesc/bridge/software/index.cfm. Note that this list is only available on the WSDOT intranet. WSDOT does not require consulting engineers to use any specific software tools, so long as the use of the tools are in accordance with sound engineering practice, and does not violate software licensing agreements and Copyright law.

When using personal design tools created by others, such as a spreadsheet or MathCAD document, the designer is responsible for thoroughly checking the tool to ensure the integrity of the structural analysis and design.

1.4 Quality Control/Quality Assurance/Quality Verification (QC/QA/QV) Procedures

1.4.1 General

The purpose of the QC/QA/QV procedure is to improve the quality of the structural designs and plans. The key element to the success of this process is effective communication between all parties. The objectives of the QC/QA/QV procedure are to:

- Design structures that improve public safety and meet state regulations.
- Design structures which meet the requirements of the *Bridge Design Manual* M 23-50, AASHTO LRFD *Bridge Specifications*, current structural engineering and architectural practices, and geometric criteria provided by the Region.
- Create contract documents that meet the customer's needs, schedule, budget, and construction staging requirements.
- Minimize structural and architectural design costs.
- Produce an organized and indexed set of design calculations with the criteria and assumptions included in the front after the index.
- Maximize plan quality.

The goals are listed in order of importance. If there is a conflict between goals, the more important goal takes precedence.

The Design Unit Supervisor determines project assignments and the QC/QA/QV process to be used in preparation of the structural design. The intent of the QC/QA/QV process is to facilitate plan production efficiency and cost-effectiveness while assuring the structural integrity of the design and to maximize the quality of the structural contract documents.

1.4.2 WSDOT Prepared Bridge (or Structure) Preliminary Plans

A. Description of Terms

Quality Control (QC)

- A thorough and detail-oriented check of the engineering content of the Preliminary Plans is performed. A set of check prints is created and retained for QC documentation.
- Alignment, profile, super-elevation rates, vertical clearances, and geometry data shown on the Preliminary Plans are checked. Geometry checks may be performed by a Structural Detailer, using the appropriate CADD software.
- A set of check prints is created and retained for QC documentation.
- The job file shall be reviewed for key design decisions, and any hydraulic, geotechnical or environmental complications, etc.
- Confirm that the current design guidelines (BDM, AASHTO) and current WSDOT Bridge Office Design Policies have been followed.
- Particular attention shall be paid to documentation regarding justification for structure type selection.
- The QC task is traditionally carried out by the Preliminary Plan Checker of Record.

Quality Assurance (QA)

- A review of the Preliminary Plans is performed, based on knowledge, experience and judgment.
- Verification that the QC process has been properly followed. Verify the existence of the QC check prints.
- Confirm that the current WSDOT Bridge Office Policies and overall Preliminary Plan protocols have been followed.
- Responsibility for the QA task belongs with the Bridge Design Unit responsible for the design, and shall be carried out by the Bridge Designer (if assigned), or by the Design Unit Supervisor.

Quality Verification (QV)

- Confirm that the QA process has been properly followed.
- A review of the Preliminary Plans is performed, based on knowledge, experience and judgment (this may also add QA value).
- The QV task is traditionally carried out by the State Bridge Design Engineer.

The QC/QA/QV procedures may vary depending on the type and complexity of the Preliminary Plan being created, and the experience level of the Engineers involved. More supervision, review, and checking may be required when the Engineers are less experienced.

1.4.3 WSDOT Prepared PS&E

A. Plans, Calculations and Quantities Prepared by WSDOT Bridge and Structures Office

1. Description of Terms

Quality Control (QC)

- A thorough and detail-oriented check of the engineering content of the plans is performed. A set of check prints is created and retained for QC documentation.
- The Designer's calculations are also checked. A set of check calculations is created and retained for documentation.
- The QC task is traditionally carried out by the Checker of Record.

Quality Assurance (QA)

- A review of the plans is performed, based on knowledge, experience and judgment. A set of check prints is created and retained for QA documentation.
- The Designer's calculations are reviewed, based on knowledge, experience and judgment. Spot-checks may be included. Independent calculations are not typically produced.
- Verification that the QC process has been properly followed. Verify the existence of QC Check Prints and Check Calculations.
- Confirm that the current design guidelines (BDM, AASHTO) and current WSDOT Bridge Office Design Policies have been followed.
- The QA task is traditionally carried out by the Design Unit Supervisor.

Quality Verification (QV)

- Confirm that the QA process has been properly followed. Verify the existence of QA Check Prints.
- A review of the plans is performed, based on knowledge, experience and judgment (this may also add QA value).
- The QV task is traditionally carried out by the State Bridge Design Engineer.

The QC/QA/QV procedures may vary depending on the type and complexity of the structure being designed, and the experience level of the design team members. More supervision, review, and checking may be required when the design team members are less experienced.

2. Designer Responsibility

The Designer is responsible for the engineering content of the contract plan sheets, including structural analysis, completeness and correctness.

Upon completion of the QC/QA/QV process, the Designer shall prepare the QC/QA/QV Checklist, and obtain signatures/initials as required. This applies to all projects regardless of type or importance (bridges, retaining walls and noise barrier walls, overhead sign structures, bridge deck overlays, traffic barriers, etc.). Refer to Appendix 1.4-A1. The Designer is also responsible for performing a Quality Assurance review of the Project Specifications and Estimate. See BDM 1.4.2 B.

3. Checker Responsibility

The Checker is responsible to the Design Unit Manager for Quality Control of the structural design, which includes checking the design, plans, calculations and quantities to assure accuracy and constructability. The Design Unit Supervisor works with the Checker to establish the level of checking required. The checking procedure for assuring the quality of the design will vary from project to project. Following are some general checking guidelines:

i. **Job File**

Scan the job file for unconventional or project specific items relating to geometrics, hydraulics, geotechnical, environmental, etc.

ii. **Design Calculations**

The design calculations may be checked by either of two methods:

Design calculations may be checked with a line-by-line review and initialing by the Checker. If it is more efficient, the Checker may choose to perform his/her own independent calculations.

Iterative design methods may be best checked by review of the Designer's calculations, while standard and straight-forward designs may be most efficiently checked with independent calculations. The Designer and Checker calculations shall both be retained for archiving.

Revision of design calculations, if required, is the responsibility of the Designer.

iii. **Structural Plans**

The Checker's plan review comments are recorded on a set of check prints, including details and bar lists, and returned to the Designer for consideration. These check prints are a vital part of the checking process, and shall be preserved. If the Checker's comments are not incorporated, the Designer should provide justification for not doing so. If there is a difference of opinion that cannot be resolved between the Designer and Checker, the Design Unit Supervisor shall resolve any issues. Check prints shall be submitted to the Design Unit Supervisor at the time of 100 percent PS&E turn-in.

If assigned by the Design Unit Supervisor, a structural detailer shall perform a complete check of the geometry using CADD or hand calculations.

Revision of plans, if required, is the responsibility of the designer.

iv. **Quantities and Barlist**

The Checker shall provide an independent set of quantity calculations. These together with the Designer's quantity calculations shall be placed in the job file.

Resolution of differences between the Designer and Checker shall be completed before the Bridge PS&E submittal. See Section 12.2.2 for procedures and requirements. The Checker shall also check the barlist.

4. Specialist/Bridge and Structures Architect Responsibility

Specialist reviews are typically cursory in nature, are not intended to fulfill the role of the Checker, and should be considered as Quality Assurance (QA). Specialists shall perform reviews and initial the Project Turn-In QC/QA/QV Worksheet of BDM Appendix 1.5-A1 at the 100 percent completion stage of certain projects including:

- **Bearing and Expansion Joint Specialist** – All expansion joint or bearing rehabilitation projects. All new bridges with modular expansion joints, unique strip seal joints (high skew, raised steel sliding plates at sidewalk, traffic islands, etc.), and bearings other than conventional elastomeric pads.
- **Concrete Specialist** – All post-tensioned super and substructures, and complex prestressed girder superstructures (long spans, large skews, tapered girders, etc.). All structures utilizing mass concrete, self-consolidating concrete (SCC), shotcrete or Grade 80 reinforcement.
- **Steel Specialist**– All new and retrofit steel superstructure projects or projects involving significant or complex welding.
- **Seismic Specialist** – All retrofit projects, and new bridges with complex seismic design requirements.
- **State Bridge and Structures Architect** – Responsible for review and approval of all Bridge & Structure projects for appropriate application of the Context Sensitive Design process and related architectural design. The Architect's involvement shall include, but not be limited to, TS&L studies, Preliminary Plans, and PS&E design level plans.

5. Design Unit Supervisor Responsibility

The Design Unit Supervisor is responsible to the Bridge Design Engineer for Quality Assurance (QA) of the structural design, which includes reviewing the design, plans and specifications for consistency and constructability. The Design Unit Supervisor shall review the plans for the following:

Review the Design Criteria.

Design Criteria

- Seismic design methodology, acceleration coefficient ("a" value), and any seismic analysis assumptions.
- Foundation report recommendations, selection of alternates.
- Deviations from AASHTO, this manual and proper consideration of any applicable Design Memorandums. Review constructability issues. Are there any problems unique to the project?
- The Design Unit Supervisor shall also review the following:
- Overall review of sheet #1, the bridge layout for:
  1. Consistency — especially for multiple bridge project
  2. Missing Information
- Review footing layout for conformance to Bridge Plan and for adequacy of information given. Generally, the field personnel shall be given enough information to "layout" the footings in the field without referring to any other sheets. Plan details shall be clear, precise, and dimensions tied to base references, such as a survey line or defined centerline of bridge. Any special circumstances regarding excavation quantities (structure exc. vs. roadway exc. delineation) shall also be detailed.
- Review the sequence of the plan sheets. The plan sheets should adhere to the following order: layout, footing layout, substructure, superstructure elements, miscellaneous details, barriers, railings, bridge approach slab, and barlist. Also check for appropriateness of the titles.
- Review overall dimensions and elevations, spot check for compatibility. For example, check compatibility between superstructures and substructure. Also spot check bar marks. Use common sense and experience to review structural dimensions and reinforcement for structural adequacy. When in doubt, question the Designer and Checker.

6. State Bridge Design Engineer's Responsibilities

The State Bridge Design Engineer is responsible for Quality Verification (QV) of the structural design process, and acts as the coach, mentor, and facilitator for the WSDOT QC/QA/QV Bridge Design process. The following summarizes the key responsibilities of the State Bridge Design Engineer related to QC/QA/QV.

- The State Bridge Design Engineer shall perform a structural/constructability review of the plans. This is a Quality Verification (QV) function as well as meeting the "responsible charge" requirements of state laws relating to Professional Engineers.
- Review unique project special provisions and *Standard Specifications*

7. General Bridge Plan Stamping and Signature Policy

The stamping and signing of bridge plans is the final step in the Bridge QC/QA/QV procedure.

It signifies a review of the plans and details by those in responsible charge for the bridge plans. At least one Licensed Structural Engineer shall stamp and sign each contract plan sheet (except for architectural detail sheets and the bar list).

For contract plans prepared by a licensed Civil or Structural Engineer, the Design Unit Supervisor and the licensed Civil or Structural Engineer co-stamp and sign the plans, except the bridge layout sheet. The bridge layout sheet is stamped and signed by the Bridge Design Engineer.

Architectural detail sheets shall be stamped and signed solely by the State Bridge and Structures Architect

For contract plans not prepared by a licensed Civil or Structural Engineer, the Design Unit Supervisor and the Bridge Design Engineer co-stamp and sign the plans except the bridge layout sheet. The bridge layout sheet is stamped and signed by the Bridge Design Engineer.

For Non-Standard Retaining Walls and Noise Barrier Walls, Sign Structures, Seismic Retrofits, Expansion Joint and Bearing Modifications, Traffic Barrier and Rail Retrofits, and other special projects, the Design Unit Supervisor with either the licensed designer or the Bridge Design Engineer (if the designer is not licensed) co-seal and sign the plans except for the layout sheet. The layout sheets for these plans are sealed and signed by the Bridge Design Engineer.

Hard copy plans shall be signed in blue ink.

The process outlined above applies also to the application of the digital signatures for stamping and signing of plans using authorized software.

B. Specifications and Estimates (S&E) Prepared by WSDOT Bridge and Structures Office

1. Description of Terms

Quality Control (QC)

- A thorough and detail-oriented check of the Specifications Run List is performed. Special Provisions are reviewed for content, and for consistency with the Plans. Fill-in values in the Special Provisions are reviewed for accuracy.
- Transcription of the Designer-supplied quantities into the Engineers Estimate is checked. Unit bid prices assigned are reviewed.
- Project Duration calculations, and any required project scheduling assumptions are checked for accuracy and consistency.
- A set of QC Review Comments is created, and retained for documentation.
- The QC task is traditionally carried out by the Specification and Estimate Engineer assigned to the Project.

Quality Assurance (QA)

- A review of the Specifications and Estimate is performed, based on knowledge, experience and judgment.
- Consistency with the Plans shall be emphasized.
- Verification that the QC process has been properly followed. Verify the existence of QC Review Comments.
- Confirm that the current WSDOT Bridge Office Policies and overall S&E organization protocols have been followed.
- Responsibility for the QA task belongs with the Bridge Design Unit responsible for the design, and shall be carried out by the Bridge Designer.

Quality Verification (QV)

- Confirm that the QA process has been properly followed.
- A review of the Specifications and Estimate is performed, based on knowledge, experience and judgment (this may also add QA value).
- The QV task is traditionally carried out by the State Bridge Design Engineer.

2. General Specification and Estimate Stamping and Signature Policy

The stamping and signing of the Certified Bridge Specifications and Estimate is the final step in the S&E QC/QA/QV procedure. It signifies a completed review of the Specifications and Estimate by those in responsible charge. The Specifications and Estimate Engineer responsible for S&E for the project shall stamp and sign the Specifications and Estimate Cover Sheet. The Certified Bridge Specifications and Estimate document is sent to the Project Engineer of the Region PE Office responsible for the overall design of the project for the retention in the Project Design File.

The Specifications and Estimate Cover Sheet shall be signed in blue ink.

1.4.4 Consultant Prepared PS&E/Preliminary Plans on WSDOT Right of Way

Plans, Quantities and Calculations, or Specifications and Estimates, or Preliminary Plans prepared by Consultants shall follow the individual Consultant's own QC/QA procedures. Also, as a minimum, the Consultant's QC/QA procedures shall include the features described above for similar WSDOT prepared work.

Preliminary Plans prepared by Consultants shall be reviewed and approved by WSDOT Bridge Office and Regional Engineering Manager (or Project Development Engineer) for the project.

WSDOT's role in Consultant-prepared engineering work will be Quality Verification only. The Consultant shall be relied upon to provide their own QC/QA effort and oversight. WSDOT'S QV task is traditionally carried out by the designated WSDOT Bridge Design Reviewer or Coordinator for the project. The WSDOT Bridge Design Reviewer/Coordinator's QV responsibilities shall include:

a. Review Consultant's Preliminary Plans. Upon resolution of all review comments, the Preliminary Plan Reviewer shall submit the Preliminary Plans to the Bridge Design Engineer and to the Regional Engineering Manager (or Project Development Engineer) for their review and signature.

b. Review Consultant's design calculations and plans for completeness and conformance to Bridge Office design practice. The plans shall be checked for constructability, consistency, clarity and compliance. Also, selectively check dimensions and elevations.

c. At the 100 percent turn-in milestone, verify that the Consultant's own QC/QA processes have been followed, and, as a minimum, that WSDOT's QC/QA requirements for similar work have been met.

1.4.5 Structural Design Work Prepared Under Design-Build or GCCM Methods of Project Delivery

Structural design work prepared by others under a Design-Build or GCCM contract shall follow the QC/QA procedures outlined in the approved project-specific Quality Management Plan (QMP). As a minimum, the QMP procedures shall include the features described above for similar WSDOT prepared work.

WSDOT's role in Design-Build/GCCM engineering work will be Quality Verification only. The outside designers shall be relied upon to provide their own QC/QA effort and oversight, per the project's approved QMP. WSDOT'S QV task is traditionally carried out by the designated WSDOT Bridge Design Reviewer or Coordinator for the project. The WSDOT Bridge Design Reviewer/Coordinator's QV responsibilities shall include:

a. Review Design-Build/GCCM design calculations and plans for completeness and conformance to Bridge Office design practice and applicable RFP requirements. The plans shall be checked for constructability, consistency, clarity and compliance. Also, selectively check dimensions and elevations.

b. At the Release For Construction (RFC) turn-in milestone, verify that the Design-Build/GCCM QC/QA processes have been followed (as outlined in the approved QMP), and, as a minimum, that WSDOT's QC/QA requirements for similar work have been met.

1.5 Bridge Design Scheduling

1.5.1 General

The Bridge Design Engineer is responsible for workforce projections, scheduling, receiving new work request coming into the Bridge Design office, and monitoring progress of projects. The *Bridge Design Schedule (BDS)* is used to track the progress of a project and is updated monthly by the Bridge Scheduling Engineer. A typical project would involve the following steps:

A. Regions advise Bridge and Structures Office of an upcoming project.

B. The Bridge Project Support Unit determines the scope of work, estimates design time and cost to prepare preliminary plans, design, and S&E (see Section 1.5.2). The Design Unit Manager may also do this and notify the Bridge Project Support Manager.

C. The project is entered into the BDS with start and due dates for site data preliminary plan, project design, PS&E, and the Ad Date.

D. Bridge site data received.

E. Preliminary design started.

F. Final Design Started – Designer estimates time required for final plans (see Section 1.5.3).

G. Monthly Schedule Update – Each Design Unit Manager is responsible for maintaining a workforce projection, monitoring monthly progress for assigned projects, and reporting progress or any changes to the scope of work or schedule to the Bridge Scheduling Engineer.

H. Project turned in to S&E unit.

1.5.2 Preliminary Design Schedule

The preliminary design estimate done by the Bridge Project Support Unit is based on historical records from past projects taking into consideration the unique features of each project, the efficiencies of designing similar and multiple bridges on the same project, designer's experience, and other appropriate factors.

1.5.3 Final Design Schedule

A. Breakdown of Project Man-Hours Required

Using a spreadsheet, list each item of work required to complete the project and the man-hours required to accomplish them. Certain items of work may have been partially completed during the preliminary design, and this partial completion should be reflected in the columns "% Completed" and "Date Completed." See Appendix 1.5-A1 and 1.5-A2.

The designer or design team leader should research several sources when making the final design time estimate. The following are possible sources that may be used:

The "Bridge Design Summary" contains records of design time and costs for past projects. This summary is kept in the Bridge Project Support. The times given include preliminary plan, design, check, drafting, and supervision.

The Bridge Project Support Unit has "Bridge Construction Cost Summary" books. These are grouped according to bridge types and have records of design time, number of drawings, and bridge cost.

B. Estimate Design Time Required

The design team leader or the Unit Supervisor shall determine an estimate of design time required to complete the project. The use of a spreadsheet, or other means is encouraged to ensure timely completion and adherence to the schedule. Use 150 hours for one staff month.

The following percentages should be used for the following activities:

Activity No.	Percentage
1	40
2	20
3	20
4	5
5	5
6	5
7	5
Total	100%

The individual activities include the specific items as follows under each major activity.

Activity No. 1 Design — See Section 1.3.2.A.2 — Includes:

1. Project coordination and maintaining the Design File.
2. Geometric computations.
3. Design calculations.
4. Complete check of all plan sheets by the designer.
5. Compute quantities and prepare barlist.
6. Preparing special provisions checklist.
7. Assemble backup data covering any unusual feature in the Design File.

Activity No. 2 Design Check — See Section 1.3.2.A.3 — Includes:

1. Checking design at maximum stress locations.
2. Checking major items on the drawings, including geometrics.
3. Additional checking required.

Activity No. 3 Drawings — See Section 1.3.2.A.4 — Includes:

1. Preparation of all drawings.

Activity No. 4 Revisions — Includes:

1. Revisions resulting from the checker's check.
2. Revisions resulting from the Design Unit Manager's review.
3. Revisions from S&E Engineer's review.
4. Revisions from Region's review.

Activity No. 5 Quantities — Includes:

1. Compute quantities including barlist.
2. Check quantities and barlist.

Activity No. 6 S&E — See Section 12.4 — Includes:

1. Prepare S&E.
2. Prepare working day schedule.

Activity No. 7 Project Review — Includes:

1. Design Unit Manager and Specialist's review.

C. Monthly Project Progress Report

The designer or design team leader is responsible for determining monthly project progress and reporting the results to the Design Unit Manager. The Design Unit Manager is responsible for monthly progress reports using information from the designer or design team leader. Any discrepancies between actual progress and the project schedule must be addressed. Report any revisions to the workforce assigned to the project, hours assigned to activities, or project schedule revisions to the Bridge Design Engineer and Region.

The designer may use a computer spreadsheet, to track the progress of the project and as an aid in evaluating the percent complete. Other tools include using an Excel spreadsheet listing bridge sheet plans by title, bridge sheet number, percent design complete, percent design check, percent plan details completed, and percent plan details checked. This data allows the designer or design team leader to rapidly determine percent of project completion and where resources need to be allocated to complete the project on schedule.

1.6 Guidelines for Bridge Site Visits

The following guidelines are established to help all staff in determining the need for visiting bridge sites prior to final design. These guidelines should apply to consultants as well as to our own staff. In all cases, the Region project engineer should be made aware of the site visit so they may have the opportunity to participate. Region participation is very useful prior to preparing the preliminary bridge plans.

1.6.1 Bridge Rehabilitation Projects

This section pertains to major bridge rehabilitation projects and excludes rail and minor expansion joint rehabilitation projects. It is critical that the design team know as much as possible about the bridge which is to be rehabilitated. Recent bridge inspection reports, prepared by inspectors from the Bridge Preservation Office (BPO), contain useful information on the condition of existing bridges. The bridge inspection reports, as well as as-built plans, are available on the Intranet through *Bridge Engineering Information System (BEIST).* BPO maintains *BEIST*.

As-built drawings and contract documents are also helpful, but may not necessarily be accurate. At least one bridge site visit is necessary for this type of project. In some cases, an in-depth inspection with experienced BPO inspectors is appropriate. The decision to perform an in-depth inspection should include the Design Unit Manager, Region, the Bridge Design Engineer, and the Bridge Preservation Engineer.

It may be necessary to use BPO's Under Bridge Inspection Truck (UBIT) if there is a need to access details and obtain measurements during the field visit. Advance planning and coordination with BPO will be necessary if UBIT equipment is required because of BPO's heavy workload and the need to provide traffic control well in advance of the site visit.

1.6.2 Bridge Widening and Seismic Retrofits

For this type of bridge project, it is important that the design team is familiar with the features and condition of the existing bridge. There is good information regarding the condition of existing bridges on *BEIST* and at the Bridge Preservation Office. As-built drawings and contract documents are also helpful, but may not necessarily be accurate. A site visit is recommended for this type of project if the bridge to be widened has unique features or is other than a standard prestressed girder bridge with elastomeric bearings.

1.6.3 Rail and Minor Expansion Joint Retrofits

Generally, photographs and site information from the Region along with as-built plans and condition survey information are adequate for most of these types of projects. However, if there is any doubt about the adequacy of the available information or concern about accelerated deterioration of the structural elements to be retrofitted, a site visit is recommended.

1.6.4 New Bridges

Generally, photographs and site data from the Region are adequate for most new bridge designs. However, if the new bridge is a replacement for an existing bridge, a site visit is recommended, particularly if the project requires staged removal of the existing bridge and/or staged construction of the new bridge.

1.6.5 Bridge Demolition

If bridge demolition is required as part of a project, a site visit would help the design team determine if there are unique site restrictions that could affect the demolition. If unique site restrictions are observed, they should be documented, included in the job file, and noted on the special provisions checklist.

Before making a site visit, the Bridge Preservation Office and the Region should be contacted to determine if there are any unique site conditions or safety hazards. Proper safety equipment and procedures should always be followed during any site visit.

When making a site visit, it is important to obtain as much information as possible. Digital photographs, video records with spoken commentary, field measurements, and field notes are appropriate forms of field information. A written or pictorial record should be made of any observed problems with an existing bridge or obvious site problems. The site visit data would then be incorporated into the job file. This information will be a valuable asset in preparing constructible and cost-effective structural designs.

It is important to include site visits as part of the consultant's scope of work when negotiating for structural design work.

1.6.6 Proximity of Railroads Adjacent to the Bridge Site

During the site visit, it should be noted if there are railroad tracks or railroad structures adjacent to the proposed bridge site. If there are, this will require that a *Railroad Shoring Plan* be developed and be included in the bridge plans for any foundation excavation adjacent to the railroad. The reason for including the *Railroad Shoring Plan* is to obtain advance approval of the shoring plan from the railroad so that waiting for the railroad's approval will not cause a delay during construction. The contractor will have to resubmit a revised *Railroad Shoring Plan* to the railroad for approval if the contractor wishes to change any details of the approved *Railroad Shoring Plan* during construction.

At the PS&E submittal phase, the Specifications and Estimates Engineer will send copies of the *Railroad Shoring Plan* to the WSDOT Railroad Liaison Engineer so it can be sent to the railroad for approval.

1.7 Appendices

Appendix 1.1-A1	Bridge Design Manual Revision QC/QA Worksheet
Appendix 1.3-A1	Bridge & Structures Design Calculations
Appendix 1.4-A1	QC/QA Signature Sheet

	Name	Approval Signature	Date
Revision Author			
Revision Checker			
Chapter Author			
Bridge Design Engineer			
BDM Coordinator			
Check of Revised Sheets			
Revision Description:			

Washington State
Department of Transportation

Bridge & Structures
Design Calculations

Project			Sheet No. 1 of 1 Sheets		Code
S.R.	Made By	Check By	Date 7/7/10	Supv	Reference

C:\AAWork\Bridge Template.xlsx Sheet1

PROJECT TURN-IN QC/QA WORKSHEET (per BDM Chapter 1.3)

Project Name:

Charge Number:

Design Lead:

Date:

Design Item	Name	Approval Names Listed: DESIGNER	CHECKER	DETAILER	CHECKLIST (Initials required under respective title): SPECIFICATION WRITER	BRIDGE & STRUCTURES ARCHITECT	SPECIALIST APPROVAL: EXPANSION JOINT & BEARING	CONCRETE	STEEL	SEISMIC	JOB FILE COMPLETE	CALCULATIONS BOUND*

Bridge Design Engineer Check at 90%: _____ Date _____
Signature

Supervisor Plan Review: _____ Date _____
Signature

NOTES:
* All Bridge & Structures Office designs are archived. This includes but is not limited to: Bridges, Bridge repairs, Retaining Walls, Sign Structures

Required Actions for each Design Item
1) Accurate & Complete Design
2) Elevations & Dimensions
3) Quantities & Barlist
4) Detailing Sheet Consistency
5) Detailing Plan Consistency
6) Detailing Office Practices
7) Specification Review
8) 100% Region Comments Incorporated

1.99 References

1. AASHTO *LRFD Bridge Design Specifications*, Latest Edition and Interims. American Association of State Highway and Transportation Officials (AASHTO), Washington, D.C.
2. *Design Manual* M 22-01
3. *Construction Manual* M 41-01
4. *As-Built Plans Manual*, WSDOT Bridge and Structures Office, August 2003
5. *AASHTO Guide Specifications for LRFD Seismic Bridge Design* (SEISMIC), Latest Edition and Interims. American Association of State Highway and Transportation Officials (AASHTO), Washington, D.C.

Chapter 2 Preliminary Design Contents

2.1 Preliminary Studies 2-1

2.2 Preliminary Plan 2-7
2.2.1 Development of the Preliminary Plan 2-7
2.2.2 Documentation 2-9
2.2.3 General Factors for Consideration 2-10
2.2.4 Permits 2-12
2.2.5 Preliminary Cost Estimate 2-13
2.2.6 Approvals 2-13

2.3 Preliminary Plan Criteria 2-17
2.3.1 Highway Crossings 2-17
2.3.2 Railroad Crossings 2-21
2.3.3 Water Crossings 2-23
2.3.4 Bridge Widening 2-25
2.3.5 Detour Structures 2-26
2.3.6 Retaining Walls and Noise Walls 2-26
2.3.7 Bridge Deck Drainage 2-26
2.3.8 Bridge Deck Protection Systems 2-27
2.3.9 Construction Clearances 2-27
2.3.10 Design Guides for Falsework Depth Requirements 2-27
2.3.11 Inspection and Maintenance Access 2-29

2.4 Selection of Structure Type 2-31

2.5 Aesthetic Considerations 2-39

2.6 Miscellaneous 2-42

2.7 WSDOT Standards for Highway Bridges 2-43
2.7.1 Design Elements 2-43
2.7.2 Detailing the Preliminary Plan 2-45

2.8 Bridge Security 2-46
2.8.1 General 2-46
2.8.2 Design 2-46
2.8.3 Design Criteria 2-47

2.9 Bridge Standard Drawings 2-49

2.10 Appendices 2-50
Appendix 2.2-A1 Bridge Site Data General 2-51
Appendix 2.2-A2 Bridge Site Data Rehabilitation 2-52
Appendix 2.2-A3 Bridge Site Data Stream Crossing 2-53
Appendix 2.2-A4 Preliminary Plan Checklist 2-54
Appendix 2.2-A5 Request For Preliminary Geotechnical Information 2-56
Appendix 2.3-A1 Bridge Stage Construction Comparison 2-58

2.99 References 2-60

2.1 Preliminary Studies 2-1

2.2 Preliminary Plan 2-7
2.2.1 Development of the Preliminary Plan 2-7
2.2.2 Documentation 2-9
2.2.3 General Factors for Consideration 2-10
2.2.4 Permits 2-12
2.2.5 Preliminary Cost Estimate 2-13
2.2.6 Approvals 2-13

2.3 Preliminary Plan Criteria 2-17
2.3.1 Highway Crossings 2-17
2.3.2 Railroad Crossings 2-21
2.3.3 Water Crossings 2-23
2.3.4 Bridge Widening 2-25
2.3.5 Detour Structures 2-26
2.3.6 Retaining Walls and Noise Walls 2-26
2.3.7 Bridge Deck Drainage 2-26
2.3.8 Bridge Deck Protection Systems 2-27
2.3.9 Construction Clearances 2-27
2.3.10 Design Guides for Falsework Depth Requirements 2-27
2.3.11 Inspection and Maintenance Access 2-29

2.4 Selection of Structure Type 2-31

2.5 Aesthetic Considerations 2-39

2.6 Miscellaneous 2-42

2.7 WSDOT Standards for Highway Bridges 2-43
2.7.1 Design Elements 2-43
2.7.2 Detailing the Preliminary Plan 2-45

2.8 Bridge Security 2-46
2.8.1 General 2-46
2.8.2 Design 2-46
2.8.3 Design Criteria 2-47

2.9 Bridge Standard Drawings 2-49

2.10 Appendices 2-50

2.99 References 2-60

Chapter 2 Preliminary Design

2.1 Preliminary Studies

Different levels of preliminary studies are discussed below. Not all are applicable to a specific project. Bridge and Structures Office should participate in all applicable studies. Reports from the studies should be filed for future reference.

2.1.1 Interdisciplinary Design Studies

Region may set up an Interdisciplinary Design Team (IDT) to review the various design alternatives for major projects. The IDT is composed of members from Regions, HQ, outside agencies, and consulting firms. The members have different areas of expertise, contribute ideas, and participate in the selection of design alternatives. This work will often culminate in the publication of an Environmental Impact Statement (EIS).

Bridge designers may be asked to participate either as a support resource or as a member of the IDT.

2.1.2 Value Engineering Studies

Value Engineering (VE) is a review process and analysis of a design project. The VE team seeks to define the most cost-effective means of satisfying the basic function(s) of the project. Usually a VE study takes place before or during the time that the region is working on the design. Occasionally, a VE study examines a project with a completed PS&E. VE studies are normally required for projects with cost overruns.

The VE team is headed by a facilitator and is composed of members with different areas of expertise from Regions, HQ, outside agencies, and consulting firms. The Team Facilitator will lead the team through the VE process. The team will review Region's project as defined by the project's design personnel. The VE team will determine the basic function(s) that are served by the project, brainstorm all possible alternatives to serve the same function(s), evaluate the alternatives for their effectiveness to meet the project's basic functions, determine costs, and prioritize and recommend alternatives. The VE team will prepare a report and present their findings to the region. The Region is then required to investigate and address the VE team's findings in the final design.

Bridge designers may be asked to participate either as a support resource or as a member of the VE team. VE studies usually take place over a three to five day period.

Engineers participating in VE studies, Cost-Risk Assessment (CRA) or Cost Estimate and Validation Process (CEVP) meetings shall call the S&E Engineers and double check all costs when providing cost estimates at VE studies and CRA meetings.

2.1.3 Preliminary Recommendations for Bridge Rehabilitation Projects

When the Region starts a bridge rehabilitation project, they will submit a written memo requesting that the Bridge and Structures Office make preliminary project recommendations.

The Bridge and Structures Office will review the as-built plans, load ratings, existing inspection and condition reports prepared by the Bridge Preservation Office (BPO), and schedule a site visit with Region and other stakeholders. Special inspection of certain portions of the structure may be included in the site visit or scheduled later with Region and BPO. The purpose of the inspections is to obtain more detailed information as to the bridge's condition, to obtain dimensions and take photographs of details needed for the project recommendations.

Following the site visit, the next steps are:

- Determine the load capacity of the existing bridge.
- Determine what type of rehabilitation work is needed and time frame required to accomplish the work.
- Determine any special construction staging requirements. Can the bridge be totally shut down for the rehabilitation period? How many lanes will need to be open? Can the work be accomplished during night closures or weekend closures?
- Develop various alternatives and cost estimates for comparison, ranging from "do nothing" to "new replacement".
- Determine what the remaining life expectancies are for the various rehabilitation alternatives.
- Determine the cost of a new replacement bridge. If the cost for the rehabilitation is equal or greater than 60 percent of a new replacement bridge, a new replacement bridge is recommended.

The Bridge and Structures Office will provide Region with a written report with background information. The Region will be given an opportunity to review the draft report and to provide input prior to finalization.

The Bridge Project Support Engineer and Specifications & Estimates Engineers (S&E) provide bridge scoping cost estimates to Regions for their use in determining budgets during Region's project definition phase. The S&E Engineers will check the Bridge Project Engineer's estimate as well as check each other.

2.1.4 Preliminary Recommendations for New Bridge Projects

The Region will seek assistance from the Bridge and Structures Office when they are preparing a design project requiring new bridges. Similar to the procedures outlined above for rehabilitation projects. The Region will submit a written memo requesting that the bridge office make preliminary project recommendations. The Bridge and Structures Office will provide scope of work, cost estimate(s), and a summary of the preferred alternatives with recommendations. Face to face meetings with the Region project staff are recommended prior to sending a written memo.

The Bridge Project Support Engineer and Specifications & Estimates Engineers provide bridge scoping cost estimates to Regions for their use in determining budgets during Region's project definition phase. The S&E Engineers will check the Bridge Project Engineer's estimate as well as check each other.

2.1.5 Type, Size, and Location (TS&L) Reports

The Federal Highway Administration (FHWA) requires that major or unusual bridges must have a Type, Size, and Location (TS&L) report prepared. The report will describe the project, proposed structure(s), cost estimates, other design alternatives considered, and recommendations. The report provides justification for the selection of the preferred alternative. A letter of approval by FHWA of the TS&L study is the basis for advancing the project to the design stage.

The FHWA should be contacted as early as possible in the Project Development stage because the FHWA requires a TS&L study for tunnels, movable bridges, unusual structures, and major structures. Smaller bridges that are unusual or bridge projects for Local Agencies may also require a TS&L study. Other projects, such as long viaducts, may not. Check with the Bridge Project Support Engineer to see if a TS&L report is necessary.

The preparation of the TS&L report is the responsibility of the Bridge and Structures Office. The TS&L cannot be submitted to FHWA until after the environmental documents have been submitted. However, TS&L preparation need not wait for environmental document approval, but may begin as soon as the bridge site data is available. See the *Design Manual* M 22-01 for the type of information required for a bridge site data submittal.

A. TS&L General

The designer should first review the project history in order to become familiar with the project. The environmental and design reports should be reviewed. The bridge site data should be checked so that additional data, maps, or drawings can be requested. A meeting with Region and a site visit should be arranged after reviewing the history of the project.

The Materials Laboratory Geotechnical Services Branch must be contacted early in the TS&L process in order to have foundation information. Specific recommendations on the foundation type must be included in the TS&L report. The Materials Laboratory Geotechnical Services Branch will submit a detailed foundation report for inclusion as an appendix to the TS&L report.

To determine the preferred structural alternative, the designer should:

l. Develop a list of all feasible alternatives. At this stage, the range of alternatives should be kept wide open. Brainstorming with the Design Unit Managers and other engineers can provide new and innovative solutions.

2 Eliminate the least desirable alternatives by applying the constraints of the project. Question and document the assumptions of any restrictions and constraints. There should be no more than four alternatives at the end of this step.

3. Perform preliminary design calculations for unusual or unique structural problems to verify that the remaining alternatives are feasible.

4. Compare the advantages, disadvantages, and costs of the remaining alternatives to determine the preferred alternative(s).

5. Visit the project site with the Region, Materials Laboratory Geotechnical Services Branch, and HQ Hydraulics staff.

FHWA expects specific information on scour and backwater elevations for the permanent bridge piers, as well as, for any temporary falsework bents placed in the waterway opening.

After the piers have been located, a memo requesting a Hydraulics Report should be sent to the HQ Hydraulics Unit. The HQ Hydraulics Unit will submit a report for inclusion as an appendix to the TS&L report.

The State Bridge and Structures Architect should be consulted early in the TS&L study period. "Notes to the File" should be made documenting the aesthetic requirements and recommendations of the State Bridge and Structures Architect.

Cost backup data is needed for any costs used in the TS&L study. FHWA expects TS&L costs to be based on estimated quantities. This cost data is to be included in an appendix to the TS&L report. The quantities should be compatible with the S&E Engineer's cost breakdown method. The Specifications & Estimates Engineers will check the designer's estimated costs included in TS&L reports. In the case of consultant prepared TS&L reports, the designer shall have the S&E Engineers check the construction costs.

B. TS&L Outline

The TS&L report should describe the project, the proposed structure, and give reasons why the bridge type, size, and location were selected.

1. Cover, Title Sheet, and Index

These should identify the project, owner, location and the contents of the TS&L.

2. Photographs

There should be enough color photographs to provide the look and feel of the bridge site. The prints should be numbered and labeled and the location indicated on a diagram.

3. Introduction

The introduction describes the report, references, and other reports used to prepare the TS&L study. The following reports should be listed, if used.

- Design Reports and Supplements
- Environmental Reports
- Architectural Visual Assessment or Corridor Theme Reports
- Hydraulic Report
- Geotechnical Reports

4. Project Description

The TS&L report clearly defines the project. A vicinity map should be shown. Care should be taken to describe the project adequately but briefly. The project description summarizes the preferred alternative for the project design.

5. Design Criteria

The design criteria identify the AASHTO LRFD and AASHTO *Guide Specifications* that will be used in the bridge design. Sometimes other design criteria or special loadings are used. These criteria should be listed in the TS&L. Some examples in this category might be the temperature loading used for segmental bridges or areas defined as wetlands.

6. Structural Studies

The structural studies section documents how the proposed structure Type, Size, and Location were determined. The following considerations should be addressed.

- Aesthetics
- Cost estimates
- Geometric constraints
- Project staging and stage construction requirements
- Foundations
- Hydraulics
- Feasibility of construction
- Structural constraints
- Maintenance

This section should describe how each of these factors leads to the preferred alternative. Show how each constraint eliminated or supported the preferred alternatives. Here are some examples. “Prestressed concrete girders could not be used because environmental restrictions required that no permanent piers could be placed in the river. This requires a 230-foot clear span.” “Restrictions on falsework placement forced the use of self supporting precast concrete or steel girders.”

7. Executive Summary

The executive summary should be able to “stand alone” as a separate document. The project and structure descriptions should be given. Show the recommended alternative(s) with costs and include a summary of considerations used to select preferred alternatives or to eliminate other alternatives.

8. Drawings

Preliminary plan drawings of the recommended alternative are included in an appendix. The drawings show the plan, elevation, and typical section. For projects where alternative designs are specified as recommended alternatives, preliminary plan drawings for each of the different structure types shall be included. Supplemental drawings showing special features, such as complex piers, are often included to clearly define the project.

C. Reviews and Submittals

While writing the TS&L report, all major decisions should be discussed with the Design Unit Manager, who can decide if the Bridge Design Engineer needs to be consulted. A peer review meeting with the Bridge Design Engineer should be scheduled at the 50 percent completion stage. If applicable, the FHWA Bridge Engineer should be invited to provide input.

The final report must be reviewed, approved, and the Preliminary Plan drawings signed by the State Bridge and Structures Architect, the Bridge Project Support Engineer, the Bridge Design Engineer, and the Bridge and Structures Engineer. The TS&L report is submitted with a cover letter to FHWA signed by the Bridge and Structures Engineer.

2.1.6 Alternate Bridge Designs

Bridge site conditions or current market conditions may justify the creation of alternate bridge designs. WSDOT has successfully used alternate bridge designs in the past to obtain best-value bridge design and construction solutions for specific locations. Alternate bridge designs may be considered when the following conditions can be satisfied:

- Construction cost estimates for the alternate designs should be comparable (within 10 percent). Cost estimates should include anticipated life-cycle costs (painting, maintenance, inspection). Periods of market uncertainty, with associated structure cost fluctuations, can provide further justification for alternate bridge designs.
- Region staff must approve the design expenditures for the preparation of alternate bridge designs, including preliminary plans, final bridge plans, specifications and construction cost estimates.
- WSDOT Bridge Office staffing levels and design schedules should allow for the preparation of alternate bridge designs.
- Variations in pier location may be required in order to optimize superstructure design for different alternates. Environmental constraints, geotechnical, hydraulic and scour conditions all need to allow for variations in pier location.
- Construction staging and traffic control must be determined for the alternates.
- Alternate bridge design concepts must be reviewed and approved by the Bridge and Structures Architect.

2.2 Preliminary Plan

The Preliminary Plan preparation stage is the most important phase of bridge and culvert design because it is the basis for the final design. The Preliminary Plan should completely define the bridge and culvert geometry so the final roadway design by the regions and the structural design by the bridge office can take place with minimal revisions.

During the Region's preparation of the highway design, they also begin work on the structure site data. Region submits the structure site data to the Bridge and Structures Office, which initiates the start of the Preliminary Plan stage. Information that must be included as part of the structure site data submittal is described in *Design Manual* M 22-01 and Appendices 2.2-A1, 2.2-A2, and 2.2-A3.

2.2.1 Development of the Preliminary Plan

A. Responsibilities

In general, the responsibilities of the designer, checker, detailer, and Design Unit Manager are described in Section 1.2.2. The Preliminary Plan Engineer is responsible for developing a preliminary plan for the bridge or culvert. The preliminary plan must be compatible with the geometric, aesthetic, staging, geotechnical, hydraulic, financial, structural requirements and conditions at the bridge site.

Upon receipt of the structure site data from the Region, the Preliminary Plan Engineer shall review it for completeness and verify that what the project calls for is realistic and structurally feasible. Any omissions or corrections are to be immediately brought to the Region's attention so that revised site data, if required, can be resubmitted to avoid jeopardizing the bridge design schedule.

The Design Unit Manager shall be kept informed of progress on the preliminary plan so that the schedule can be monitored. If problems develop, the Design Unit Manager can request adjustments to the schedule or allocate additional manpower to meet the schedule. The Preliminary Plan Engineer must keep the job file up-to-date by documenting all conversations, meetings, requests, questions, and approvals concerning the project. Notes-to-the-designer, and details not shown in the preliminary plan shall be documented in the job file.

The checker shall provide an independent review of the plan, verifying that it is in compliance with the site data as provided by the region and as corrected in the job file. The plan shall be compared against the Preliminary Plan checklist (see Appendix 2.2-A4) to ensure that all necessary information is shown. The checker is to review the plan for consistency with office design practice, detailing practice, and for constructability.

The preliminary plan shall be drawn using current office CAD equipment and software by the designer or detailer.

B. Site Reconnaissance

The site data submitted by the Region will include photographs and a video of the site. Even for minor projects, this may not be enough information for the designer to work from to develop a preliminary plan. For most bridge projects, site visits are necessary.

Site visits with Region project staff and other project stakeholders, such as, Materials Laboratory Geotechnical Services Branch, HQ Hydraulics, and Region Design should be arranged with the knowledge and approval of the Bridge Project Support Engineer.

C. Coordination

The designer is responsible for coordinating the design and review process throughout the project. This includes seeking input from various WSDOT units and outside agencies. The designer should consult with Materials Laboratory Geotechnical Services Branch, HQ Hydraulics, Bridge Preservation Office, and Region design and maintenance, and other resources for their input.

D. Consideration of Alternatives

In the process of developing the Preliminary Plan, the designer should brainstorm, develop, and evaluate various design alternatives. See Section 2.2.3 General Factors for Consideration and how they apply to a particular site. See also Section 2.1.5A. Preliminary design calculations shall be done to verify feasibility of girder span and spacing, falsework span capacity, geometry issues, and construction clearances. Generally, the number of alternatives will usually be limited to only a few for most projects. For some smaller projects and most major projects, design alternatives merit development and close evaluation. The job file should contain reasons for considering and rejecting design alternatives. This provides documentation for the preferred alternative.

E. Designer Recommendation

The designer should be able to make a recommendation for the preferred alternative after a thorough analysis of the needs and limitations of the site, studying all information, and developing and evaluating the design alternatives for the project. At this stage, the designer should discuss the recommendation with the Bridge Project Support Engineer.

F. Concept Approval

For some projects, the presentation, in “E” above, to the Bridge Project Support Engineer will satisfy the need for concept approval. Large complex projects, projects of unique design, or projects where two or more alternatives appear viable, should be presented to the Bridge Design Engineer for his/her concurrence before plan development is completed. For unique or complex projects a presentation to the Region Project Engineer, and Bridge and Structures Office Peer Review Committee may be appropriate.

2.2.2 Documentation

A. Job File

An official job file is created by the Bridge Scheduling Engineer when a memo transmitting site data from the region is received by the Bridge and Structures Office. This job file serves as a depository for all communications and resource information for the job. Scheduling and time estimates are kept in this file, as well as cost estimates, preliminary quantities, and documentation of all approvals. Records of important telephone conversations and copies of e-mails approving decisions are also kept in the job file.

After completing the Preliminary Plan, the job file continues to serve as a depository for useful communications and documentation for all pertinent project related information and decisions during the design process through and including preparation of the Final Bridge PS&E.

B. Structure Site Data

All Preliminary Plans are developed from site data submitted by the Region. This submittal will consist of a memorandum intra-departmental communication, and appropriate attachments as specified by the *Design Manual* M 22-01. When this information is received, it should be reviewed for completeness so that missing or incomplete information can be noted and requested.

C. Request for Preliminary Foundation Data

A request for preliminary foundation data is sent to the Geotechnical Services Branch to solicit any foundation data that is available at the preliminary bridge design stage. See Appendix 2.2-A5. The Materials Laboratory Geotechnical Services Branch is provided with approximate dimensions for the overall structure length and width, approximate number of intermediate piers (if applicable), and approximate stations for beginning and end of structure on the alignment.

Based on test holes from previous construction in the area, geological maps, and soil surveys. The Materials Laboratory Geotechnical Services Branch responds by memo and a report with an analysis of what foundation conditions are likely to be encountered and what foundation types are best suited for the bridge site.

D. Request for Preliminary Hydraulics Data

A Request for preliminary hydraulics data is sent to the Hydraulics Branch to document hydraulic requirements that must be considered in the structure design. The Hydraulics Branch is provided a contour plan and other bridge site data.

The Hydraulics Branch will send a memo providing the following minimum data: seal vent elevations, normal water, 100-year and 500-year flood elevations and flows (Q), pier configuration, scour depth and minimum footing cover required, ice pressure, minimum waterway channel width, riprap requirements, and minimum clearance required to the 100-year flood elevation.

E. Design Report or Design Summary and Value Engineering Studies

Some bridge construction projects have a Design File Report or Design Summary prepared by the region. This is a document, which includes design considerations and conclusions reached in the development of the project. It defines the scope of work for the project. It serves to document the design standards and applicable deviations for the roadway alignment and geometry. It is also an excellent reference for project history, safety and traffic data, environmental concerns, and other information. If a VE study was done on the bridge, the report will identify alternatives that have been studied and why the recommended alternative was chosen.

F. Other Resources

For some projects, preliminary studies or reports will have been prepared. These resources can provide additional background for the development of the Preliminary Plan.

G. Notes

Notes of meetings with Regions and other project stakeholders shall be included in the job file.

2.2.3 General Factors for Consideration

Many factors must be considered in preliminary bridge design. Some of the more common of these are listed in general categories below. These factors will be discussed in appropriate detail in subsequent portions of this manual.

A. Site Requirements

Topography
Alignment (tangent, curved, skewed)
Vertical profile and superelevation
Highway Class and design speed
Proposed or existing utilities

B. Safety

Feasibility of falsework (impaired clearance and sight distance, depth requirements, see Section 2.3.10)
Density and speed of traffic
Detours or possible elimination of detours by construction staging
Sight distance
Horizontal clearance to piers
Hazards to pedestrians, bicyclists

C. Economic

Funding classification (federal and state funds, state funds only, local developer funds)
Funding level
Bridge preliminary cost estimate

D. Structural

Limitation on structure depth
Requirements for future widening
Foundation and groundwater conditions
Anticipated settlement
Stage construction
Falsework limitations

E. Environmental

Site conditions (wetlands, environmentally sensitive areas, and cultural resources)
Environmental requirements
Mitigating measures
Construction access

F. Aesthetic

General appearance
Compatibility with surroundings and adjacent structures
Visual exposure and experience for public

G. Construction

Ease of construction
Falsework clearances and requirements
Erection problems
Hauling difficulties and access to site
Construction season
Time limit for construction

H. Hydraulic

Bridge deck drainage
Stream flow conditions and drift
Passage of flood debris
Scour, effect of pier as an obstruction (shape, width, skew, number of columns)
Bank and pier protection
Consideration of a culvert as an alternate solution
Permit requirements for navigation and stream work limitations

I. Maintenance

Concrete vs. Steel
Expansion joints
Bearings
Deck protective systems
Inspection and Maintenance Access (UBIT clearances) (see Figure 2.3.11-1)

J. Other

Prior commitments made to other agency officials and individuals of the community Recommendations resulting from preliminary studies

K. Bridge Security

Mitigation measures for the inappropriate and illegal access to the bridge Employing the methods of Crime Prevention Through Environmental Design (CPTED)

2.2.4 Permits

A. Coast Guard

As outlined in the *Design Manual* M 22-01, *Additional Data for Waterway Crossings*, the Bridge and Structures Office is responsible for coordinating and applying for Coast Guard permits for bridges over waterways. The Coast Guard Liaison Engineer in the Bridge Project Support Unit of the Bridge and Structures Office handles this.

A determination of whether a bridge project requires a Coast Guard permit is typically determined by Region Environmental during the early scoping phase. This scoping is done before the bridge site data is sent to the Bridge and Structures Design Office/Unit.

The Region Design Engineer should request that the Environmental Coordinator consult with the Coast Guard Liaison Engineer prior to sending the bridge site data if possible.

Generally, tidal-influenced waterways and waterways used for commercial navigation will require Coast Guard permits. See the *Design Manual* M 22-01, chapter covering Environmental Permits and Approvals, or the *Environmental Manual* Chapter 500 for general permitting information. Section 9 Permit – Bridge Work in Navigable Waters can be found on the WSDOT Federal Environmental Permits and Approval web page, www.wsdot.wa.gov/environment/permitting/permitfsl.htm. Permitting procedures are available on the WSDOT Environmental Permitting tools and help page, www.wsdot.wa.gov/environment/permitting/permittools.htm

For all waterway crossings, the Coast Guard Liaison Engineer is required to initial the Preliminary Plan as to whether a Coast Guard permit or exemption is required. This box regarding Coast Guard permit status is located in the center left margin of the plan. If a permit is required, the permit target date will also be noted. The reduced print, signed by the Coast Guard Liaison Engineer, shall be placed in the job file.

The work on developing the permit application should be started before the bridge site data is complete so that it is ready to be sent to the Coast Guard at least eight months prior to the project ad date. The Coast Guard Liaison Engineer should be given a copy of the preliminary plans from which to develop the Coast Guard Application plan sheets, which become part of the permit.

B. Other

All other permits will be the responsibility of the Region (see the *Design Manual* M 22-01). The Bridge and Structures Office may be asked to provide information to the Region to assist them in making applications for these permits.

2.2.5 Preliminary Cost Estimate

A preliminary cost estimate should be developed when the bridge type, foundation type, deck area and adjacent retaining walls are determined. At the preliminary stage the cost estimate is based on square-foot costs taken from the Chapter 12 and adjusted for structure specifics. Consult with a Specifications and Estimates Engineer. The preliminary cost estimate is based on recent bidding history on similar structures, degree of difficulty of construction, inflation trends, and length of time until Ad Date, and time for completion of construction. It is considered accurate to within 15 percent, but is should be accurate enough to preclude a surprise increase at the time of the Engineer's estimate, which is based on completed design quantities. The preliminary cost estimate shall be updated frequently as changes are made to the preliminary plan or new data influences the costs.

After a Preliminary Plan has been developed, but before sending to the Bridge Design Engineer for signature, the Preliminary Plan and cost estimate shall be submitted to one of the Bridge Specifications and Estimates Engineers for review and comment for the structures in the Preliminary Plan. The information presented to the S&E Engineer shall include the complete Preliminary Plan and all backup data previously prepared on costs for the structures (such as preliminary quantity calculations, preliminary foundation type selection, etc,). The S&E Engineer will review the Preliminary Plan, prepare, sign, and date a cost estimate summary sheet, and return the package to the designer. When the Preliminary Plan is presented to the Bridge Design Engineer, the submittal shall include the summary sheet prepared by the S&E Engineer. The summary sheet and backup data will then be placed in the job file. Do not send the summary sheet to the Region.

After submittal of the Preliminary Plan to the Region, the Region shall be notified immediately of any increases in the preliminary cost estimate during the structural design.

2.2.6 Approvals

A. State Bridge and Structures Architect/Specialists

For all preliminary plans, the State Bridge and Structures Architect and appropriate specialists should be aware and involved when the designer is first developing the plan. The State Bridge and Structures Architect and specialists should be given a print of the plan by the Preliminary Plan Engineer. This is done prior to checking the preliminary plan. The State Bridge and Structures Architect and specialist will review, approve, sign and date the print. This signed print is placed in the job file. If there are any revisions, which affect the aesthetics of the approved preliminary plan, the State Bridge and Structures Architect should be asked to review and approve, by signature, a print showing the revisions, which change elements of aesthetic significance.

For large, multiple bridge projects, the State Bridge and Structures Architect should be contacted for development of a coordinated architectural concept for the project corridor.

The architectural concept for a project corridor is generally developed in draft form and reviewed with the project stakeholders prior to finalizing. When finalized, it should be signed by the Region Administrator or his/her designee.

Approval from the State Bridge and Structures Architect is required on all retaining walls and noise wall aesthetics including finishes and materials, and configuration.

In order to achieve superstructure type optimization and detailing consistency, the following guidelines shall be used for the preparation of all future Preliminary Plans:

- Preliminary Plans for all steel bridges and structures shall be reviewed by the Steel Specialist.
- Preliminary Plans for all concrete bridges and structures shall be reviewed by the Concrete Specialist.
- Detailing of all Preliminary Plans shall be reviewed by the Preliminary Plans Detailing Specialist.

These individuals shall signify their approval by signing the preliminary plan in the Architect/Specialist block on the first plan sheet, together with the State Bridge and Structures Architect.

B. Bridge Design

The Bridge Project Support Engineer signs the preliminary plan after it has been checked and approved by the Architect/Specialists. At this point, it is ready for review, approval, and signing by the Bridge Design Engineer.

After the Bridge Design Engineer has signed the preliminary plan, it is returned to the designer. The designer places the original signed preliminary plan in the job file and enters the names of the signers in the signature block. This preliminary plan will be sent to region for their review and approval.

The transmittal memo includes the preliminary plan and the WSDOT Form 230-038 *Not Included in Bridge Quantities List* and a brief explanation of the preliminary cost estimate. This is a list of non-bridge items that appear on the bridge preliminary plan and eventually will be covered in the Region's design plans. It is addressed to the Region Administrator/Project Development Engineer from the Bridge and Structures Engineer/Bridge Design Engineer. The memo is reviewed by the Bridge Project Support Engineer and is initialed by the Bridge Design Engineer.

The following should be included in the cc distribution list with attachments:

1. FHWA Washington Division Bridge Engineer (when project has Federal Funding),
2. Region Project Engineer,
3. Bridge Project Support Engineer,
4. Bridge Design Unit Manager, State Geotechnical Engineer,
5. HQ Hydraulics Engineer (when it is a water crossing),

6. Bridge Management Engineer (when it is a replacement),
7. Bridge Preservation Engineer,
8. HQ RR Liaison Engineer (when a railroad is involved), and Region Traffic Engineer (when ITS is required).
9. The Bridge Scheduling Engineer and the Region and HQ Program Management Engineers should receive a copy of the preliminary plan distribution memo without the attachments.

C. Region

Prior to the completion of the preliminary plan, the designer should meet with the Region to discuss the concept, review the list of items to be included in the "Not Included in Bridge Quantities List" and get their input.

The Region will review the preliminary plan for compliance and agreement with the original site data. They will work to answer any *"Notes to the Region"* that have been listed on the plan. When this review is complete, the Regional Administrator, or his/her designee, will sign the plan. The Region will send back a print of the signed plan with any comments noted in red (additions) and green (deletions) along with responses to the questions raised in the *"Notes to the Region."*

D. Railroad

When a railroad is involved with a structure on a Preliminary Plan, the HQ RR Liaison Engineer of the Design Office must be involved during the plan preparation process. A copy of the Preliminary Plan is sent to the HQ RR Liaison Engineer, who then sends a copy to the railroad involved for their comments and approval.

The railroad will respond with approval by letter to the HQ RR Liaison Engineer. A copy of this letter is then routed to the Bridge and Structures Office and then placed in the job file.

For design plans prepared within the Bridge and Structures Office, the Design Unit Manager or lead designer will be responsible for coordinating and providing shoring plans for structures adjacent to railroads. It is recommended that the Construction Support Unit design, prepare, stamp, and sign shoring plans. However, the design unit may elect to design, prepare, stamp, and sign shoring plans.

For consultant prepared design plans, the Design Unit Manager or lead reviewer will be responsible for coordinating and having the consultant design shoring plans for structures adjacent to railroads. The Construction Support Unit has design criteria and sample plan details which can be used by the design units and consultants.

A Construction Support engineer is available to attend design project kick-off meetings if there is a need for railroad shoring plans or other constructability issues associated with the project. Regardless of who prepares the bridge plans, all shoring plans should be reviewed by the Construction Support Unit before they are submitted for railroad review and approval at the 50 percent Final PS&E stage.

For completed shelf projects, the S&E Engineer will contact the Region Project Engineer and inform the Design Unit Manager or lead reviewer on the need for shoring plans for structures adjacent to railroads. If shoring plans are required, the Design Unit Manager or lead designer may ask the Construction Support Unit to prepare shoring plans.

At the 50 percent PS&E plan completion stage or sooner if possible, especially for seismic retrofit project, the S&E Engineer will send four (4) copies of the layout, foundation plan, temporary shoring plans, and appropriate special provision section for structures adjacent to railroads to the HQ RR Liaison Engineer, who will submit this package to the appropriate railroad for review and approval. The shoring plans shall show the pressure loading diagram and calculations to expedite the railroad's review and approval.

2.3 Preliminary Plan Criteria

2.3.1 Highway Crossings

A. General

A highway crossing is defined as a grade separation between two intersecting roadways. Naming convention varies slightly between mainline highway crossings and ramp highway crossings, but essentially, all bridges carry one highway, road, or street over the intersecting highway, road, or street.

1. Mainline Highway Crossings

Names for mainline highway crossings are defined by the route designation or name of state highway, county road, or city street being carried over another highway, road, or street.

For example, a bridge included as part of an interchange involving I-205 and SR 14 and providing for passage of traffic on I-205 under SR 14 would be named SR 14 Over I-205 (followed by the bridge number).

2. Ramp Highway Crossings

Names for ramp highway crossings are defined by the state highway route numbers being connected, the directions of travel being connected, and the designation or name of the highway, road, or street being bridged.

For example, a bridge in the Hewitt Avenue Interchange connecting traffic from westbound US 2 to northbound I-5 and passing over Everett Street would be named 2W-5N Ramp Over Everett Street (followed by the bridge number). A bridge connecting traffic from northbound I-5 to westbound SR 518 and passing over northbound I-405 and a ramp connecting southbound I-405 to northbound I-5 would be named 5N-518W Over 405N, 405S-5N (followed by the bridge number).

B. Bridge Width

The bridge roadway channelization (configuration of lanes and shoulders) is provided by the region with the Bridge Site Data. For state highways, the roadway geometrics are controlled by the *Design Manual* M 22-01. For city and county arterials, the roadway geometrics are controlled by Chapter 42 of the *Local Agency Guidelines* M 36-63.

C. Horizontal Clearances

Safety dictates that fixed objects be placed as far from the edge of the roadway as is economically feasible. Criteria for minimum horizontal clearances to bridge piers and retaining walls are outlined in the *Design Manual* M 22-01. The *Design Manual* M 22-01 outlines clear zone and recovery area requirements for horizontal clearances without guardrail or barrier being required.

Actual horizontal clearances shall be shown in the plan view of the Preliminary Plan (to the nearest 0.1 foot). Minimum horizontal clearances to inclined columns or wall surfaces should be provided at the roadway surface and for a vertical distance of 6′ above the edge of pavement. When bridge end slopes fall within the recovery area, the minimum horizontal clearance should be provided for a vertical distance of 6′ above the fill surface. See Figure 2.3.1-1.

Bridge piers and abutments ideally should be placed such that the minimum clearances can be satisfied. However, if for structural or economic reasons, the best span arrangement requires a pier to be within clear zone or recovery area, and then guardrail or barrier can be used to mitigate the hazard.

There are instances where it may not be possible to provide the minimum horizontal clearance even with guardrail or barrier. An example would be placement of a bridge pier in a narrow median. The required column size may be such that it would infringe on the shoulder of the roadway. In such cases, the barrier safety shape would be incorporated into the shape of the column. Barrier or guardrail would need to taper into the pier at a flare rate satisfying the criteria in the *Design Manual* M 22-01. See Figure 2.3.1-2. The reduced clearance to the pier would need to be approved by the Region. Horizontal clearances, reduced temporarily for construction, are covered in Section 2.3.9.

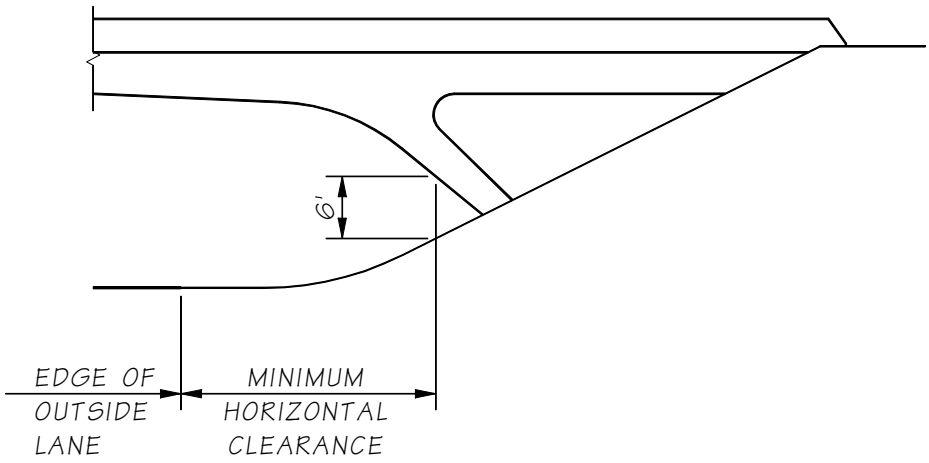

Horizontal Clearance to Incline Piers
Figure 2.3.1-1

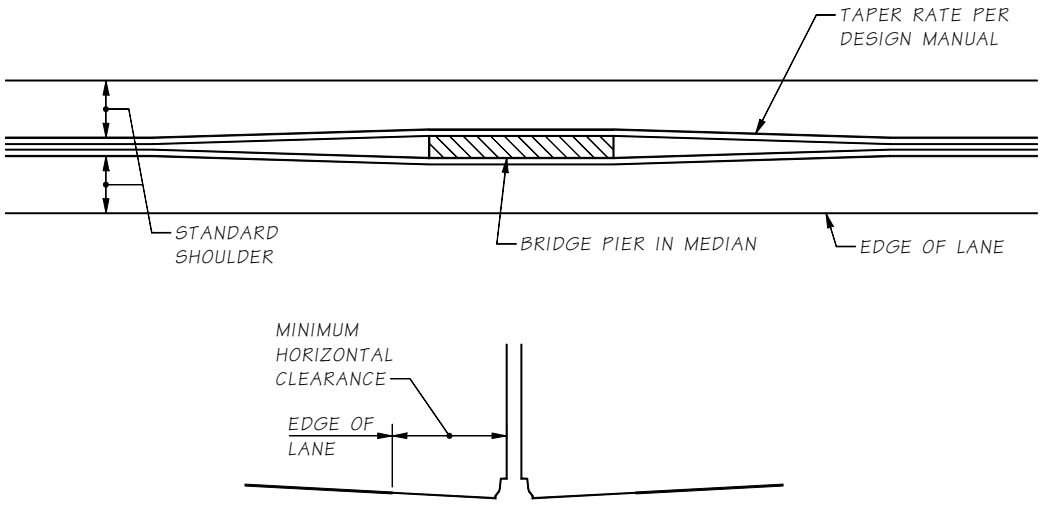

Bridge Pier in Narrow Median
Figure 2.3.1-2

D. Vertical Clearances

The required minimum vertical clearances are established by the functional classification of the highway and the construction classification of the project. For state highways, this is as outlined in the *Design Manual* M 22-01. For city and county arterials, this is as outlined in Chapter IV of the *Local Agency Guidelines* M 36-63.

Actual minimum vertical clearances are shown on the Preliminary Plan (to the nearest 0.1 foot). The approximate location of the minimum vertical clearance is noted in the upper left margin of the plan. For structures crossing divided highways, minimum vertical clearances for both directions are noted.

E. End Slopes

The type and rate of end slope used at bridge sites is dependent on several factors. Soil conditions and stability, right of way availability, fill height or depth of cut, roadway alignment and functional classification, and existing site conditions are important.

The region should have made a preliminary determination based on these factors during the preparation of the bridge site data. The side slopes noted on the Roadway Section for the roadway should indicate the type and rate of end slope.

The Materials Laboratory Geotechnical Services Branch will recommend the minimum rate of end slope. This should be compared to the rate recommended in the Roadway Section and to existing site conditions (if applicable). The types of end slopes and bridge slope protection are discussed in the *Design Manual* M 22-01. Examples of slope protection are shown in *Standard Plans* M 21-01 Section A.

F. Determination of Bridge Length

Establishing the location of the end piers for a highway crossing is a function of the profile grade of the overcrossing roadway, the superstructure depth, the minimum vertical and horizontal clearances required for the structure, the profile grade and channelization (including future widening) of the undercrossing roadway, and the type and rate of end slope used.

For the general case of bridges in cut or fill slopes, the control point is where the cut or fill slope plane meets the bottom of roadside ditch or edge of shoulder as applicable. From this point, the fill or cut slope plane is established at the recommended rate up to where the slope plane intersects the grade of the roadway at the shoulder. Following the requirements of *Standard Plans* M 21-01 Section A, the back of pavement seat, end of wing wall or end of retaining wall can be established at 3′ behind the slope intersection. See Figure 2.3.1-3

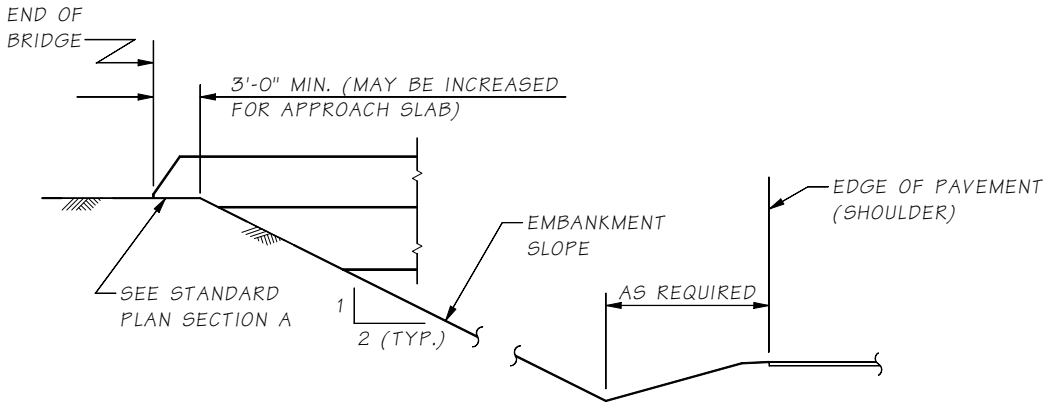

Determination of Bridge Length
Figure 2.3.1-3

For the general case of bridges on wall type abutments or "closed" abutments, the controlling factors are the required horizontal clearance and the size of the abutment. This situation would most likely occur in an urban setting or where right of way or span length is limited.

G. Pedestrian Crossings

Pedestrian crossings follow the same format as highway crossings. Geometric criteria for bicycle and pedestrian facilities are established in the *Design Manual* M 22-01. Width and clearances would be as established there and as confirmed by region. Minimum vertical clearance over a roadway is given in the *Design Manual* M 22-01. Unique items to be addressed with pedestrian facilities include ADA requirements, the railing to be used, handrail requirements, overhead enclosure requirements, and profile grade requirements for ramps and stairs.

H. Bridge Redundancy

Design bridges to minimize the risk of catastrophic collapse by using redundant supporting elements (columns and girders).

For substructure design use:

One column minimum for roadways 40′ wide and under. Two columns minimum for roadways over 40′ to 60′. Three columns minimum for roadways over 60′. Collision protection or design for collision loads for piers with one or two columns is required. For superstructure design use:

Three girders (webs) minimum for roadways 32′ and under. Four girders (webs) minimum for roadways over 32′. See Appendix 2.3-A2-1 for details.

Note: Any deviation from the above guidelines shall have a written approval by the Bridge Design Engineer.

2.3.2 Railroad Crossings

A. General

A railroad crossing is defined as a grade separation between an intersecting highway and a railroad. Names for railroad crossings are defined either as railroad over state highway or state highway over railroad. For example, a bridge carrying BNSF railroad tracks over I-5 would be named BNSF Over I-5 (followed by the bridge number) A bridge carrying I-90 over Union Pacific railroad tracks would be named I-90 Over UPRR (followed by the bridge number).

Requirements for highway/railway grade separations may involve negotiations with the railroad company concerning clearances, geometrics, utilities, and maintenance roads. The railroad's review and approval will be based on the completed Preliminary Plan.

B. Criteria

The initial Preliminary Plan shall be prepared in accordance with the criteria of this section to apply uniformly to all railroads. Variance from these criteria will be negotiated with the railroad, when necessary, after a Preliminary Plan has been provided for their review.

C. Bridge Width

For highway over railway grade separations the provisions of Section 2.3.1 pertaining to bridge width of highway crossings shall apply. Details for railway over highway grade separations will depend on the specific project and the railroad involved.

D. Horizontal Clearances

For railway over highway grade separations, undercrossings, the provisions of Section 2.3.1 pertaining to horizontal clearances for highway crossings shall apply. However, because of the heavy live loading of railroad spans, it is advantageous to reduce the span lengths as much as possible. For railroad undercrossings skewed to the roadway, piers may be placed up to the outside edge of standard shoulders (or 8′ minimum) if certain conditions are met (known future roadway width requirements, structural requirements, satisfactory aesthetics, satisfactory sight distance, barrier protection requirements, etc.).

For railroad overcrossings, minimum horizontal clearances are as noted below:

	Railroad Alone
Fill Section	14′
Cut Section	16′

Horizontal clearance shall be measured from the center of the outside track to the face of pier. When the track is on a curve, the minimum horizontal clearance shall be increased at the rate of 1½″ for each degree of curvature. An additional 8′ of clearance for off-track equipment shall only be provided when specifically requested by the railroad.

The actual minimum horizontal clearances shall be shown in the Plan view of the Preliminary Plan (to the nearest 0.1 foot).

E. Crash Walls

Crash walls, when required, shall be designed to conform to the criteria of the *AREMA Manual*. To determine when crash walls are required, consult the following:

Union Pacific Railroad "*Guidelines for Design of Highway Separation Structures over Railroad* (Overhead Grade Separation)"

AREMA Manual Railroad Liaison Engineer the Railroad.

F. Vertical Clearances

For railway over highway grade separations, the provisions of Section 2.3.1 pertaining to vertical clearances of highway crossings shall apply. For highway over railway grade separations, the minimum vertical clearance shall satisfy the requirements of the *Design Manual* M 22-01.

The actual minimum vertical clearances shall be shown on the Preliminary Plan (to the nearest 0.1 foot). The approximate location of the minimum vertical clearance is noted in the upper left margin of the plan.

G. Determination of Bridge Length

For railway over highway grade separations, the provisions of Section 2.3.1 pertaining to the determination of bridge length shall apply. For highway over railway grade separations, the minimum bridge length shall satisfy the minimum horizontal clearance requirements. The minimum bridge length shall generally satisfy the requirements of Figure 2.3.2-1.

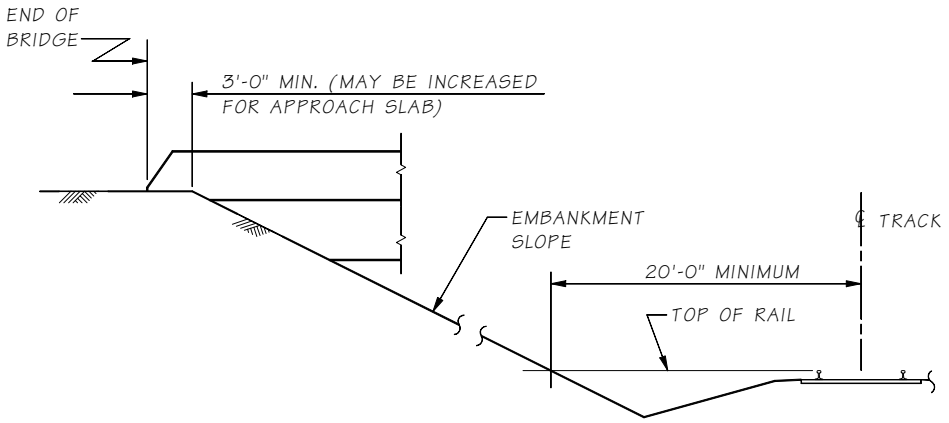

Determination of Bridge Length For a Highway Over Railway Grade Separation
Figure 2.3.2-1

H. Special Considerations

For highway over railway grade separations, the top of footings for bridge piers or retaining walls adjacent to railroad tracks shall be 2′ or more below the elevation of the top of tie and shall not have less than 2′ of cover from the finished ground. The footing face shall not be closer than 10′ to the center of the track. Any cofferdams, footings, excavation, etc., encroaching within 10′ of the center of the track requires the approval of the railroad.

I. Construction Openings

For railroad clearances, see *Design Manual* M 22-01. The minimum horizontal construction opening is 9′ to either side of the centerline of track. The minimum vertical construction opening is 23′-6″ above the top of rail at 6′ offset from the centerline of track. Falsework openings shall be checked to verify that enough space is available for falsework beams to span the required horizontal distances and still provide the minimum vertical falsework clearance. Minimum vertical openings of less than 23′-6″ shall be coordinated with the HQ Railroad Liaison Engineer.

2.3.3 Water Crossings

A. Bridge Width

The provisions of Section 2.3.1 pertaining to bridge width for highway crossings apply here.

B. Horizontal Clearances

Water crossings over navigable waters requiring clearance for navigation channels shall satisfy the horizontal clearances required by the Coast Guard. Communication with the Coast Guard will be handled through the Coast Guard Liaison Engineer. For bridges over navigable waters, the centerline of the navigation channel and the horizontal clearances (to the nearest 0.1 foot) to the piers or the pier protection shall be shown on the Plan view of the Preliminary Plan. Pier locations shall be reviewed by the HQ Hydraulics unit.

C. Vertical Clearances

Vertical clearances for water crossings must satisfy floodway clearance and, where applicable, navigation clearance.

Bridges over navigable waters must satisfy the vertical clearances required by the Coast Guard. Communication with the Coast Guard will be handled through the Coast Guard Liaison Engineer. The actual minimum vertical clearance (to the nearest 0.1 foot) for the channel span shall be shown on the Preliminary Plan. The approximate location of the minimum vertical clearance shall be noted in the upper left margin of the plan. The clearance shall be shown to the water surface as required by the Coast Guard criteria.

Floodway vertical clearance will need to be discussed with the Hydraulics Branch. In accordance with the flood history, nature of the site, character of drift, and other factors, they will determine a minimum vertical clearance for the 100-year flood. The roadway profile and the bridge superstructure depth must accommodate this. The actual minimum vertical clearance to the 100-year flood shall be shown (to the nearest 0.1 foot) on the Preliminary Plan, and the approximate location of the minimum vertical clearance shall be noted in the upper left margin of the plan.

D. End Slopes

The type and rate of end slopes for water crossings is similar to that for highway crossings. Soil conditions and stability, fill height, location of toe of fill, existing channel conditions, flood and scour potential, and environmental concerns are all important.

As with highway crossings, the Region, and Materials Laboratory Geotechnical Services Branch will make preliminary recommendations as to the type and rate of end slope. The Hydraulics Branch will also review the Region's recommendation for slope protection.

E. Determination of Bridge Length

Determining the overall length of a water crossing is not as simple and straightforward as for a highway crossing. Floodway requirements and environmental factors have a significant impact on where piers and fill can be placed.

If a water crossing is required to satisfy floodway and environmental concerns, it will be known by the time the Preliminary Plan has been started. Environmental studies and the Design Report prepared by the region will document any restrictions on fill placement, pier arrangement, and overall floodway clearance. The Hydraulics Branch will need to review the size, shape, and alignment of all bridge piers in the floodway and the subsequent effect they will have on the base flood elevation. The overall bridge length may need to be increased depending on the span arrangement selected and the change in the flood backwater, or justification will need to be documented.

F. Scour

The Hydraulics Branch will indicate the anticipated depth of scour at the bridge piers. They will recommend pier shapes to best streamline flow and reduce the scour forces. They will also recommend measures to protect the piers from scour activity or accumulation of drift (use of deep foundations, minimum cover to top of footing, riprap, pier alignment to stream flow, closure walls between pier columns, etc.).

G. Pier Protection

For bridges over navigable channels, piers adjacent to the channel may require pier protection such as fenders or pile dolphins. The Coast Guard will determine whether pier protection is required. This determination is based on the horizontal clearance provided for the navigation channel and the type of navigation traffic using the channel.

H. Construction Access and Time Restrictions

Water crossings will typically have some sort of construction restrictions associated with them. These must be considered during preliminary plan preparation.

The time period that the Contractor will be allowed to do the work within the waterway may be restricted by regulations administered by various agencies. Depending on the time limitations, a bridge with fewer piers or faster pier construction may be more advantageous even if more expensive.

Contractor access to the water may also be restricted. Shore areas supporting certain plant species are sometimes classified as wetlands. A work trestle may be necessary in order to work in or gain access through such areas. Work trestles may also be necessary for bridge removal as well as new bridge construction. Work trestle feasibility, location, staging, deck area and approximate number of piles, and estimated cost need to be determined to inform the Region as part of the bridge preliminary plan.

I. Culvert that qualify as a bridge per National Bridge Inspection Standards (NBIS) shall be designed to meet above requirements for Water Crossings.

2.3.4 Bridge Widening

A. Bridge Width

The provisions of Section 2.3.1 pertaining to bridge width for highway crossings shall apply. In most cases, the width to be provided by the widening will be what is called for by the design standards, unless a deviation is approved.

B. Traffic Restrictions

Bridge widening involve traffic restrictions on the widened bridge and, if applicable, on the lanes below the bridge. The bridge site data submitted by the region should contain information regarding temporary lane widths and staging configurations. This information should be checked to be certain that the existing bridge width and the bridge roadway width during the intermediate construction stages of the bridge are sufficient for the lane widths, shy distances, temporary barriers, and construction room for the contractor. These temporary lane widths and shy distances are noted on the Preliminary Plan. The temporary lane widths and shy distances on the roadway beneath the bridge being widened should also be checked to ensure adequate clearance is available for any substructure construction.

C. Construction Sequence

A construction sequence shall be developed using the traffic restriction data in the bridge site data. The construction sequence shall take into account the necessary steps for construction of the bridge widening including both the substructure and superstructure. Placement of equipment is critical because of limited access and working space limitations. Space is required for cranes to construct shafts and erect the girders. Consult the Construction Support Unit for crane information, such as: boom angle, capacities, working loads, working radius, and crane footprint. Construction work off of and adjacent to the structure and the requirements of traffic flow on and below the structure shall be taken into account. Generally, cranes are not allowed to lift loads while supported from the existing structure. Checks shall be made to be certain that girder spacing, closure pours, and removal work are all compatible with the traffic arrangements.

Projects with several bridges being widened at the same time should have sequencing that is compatible with the Region's traffic plans during construction and that allow the Contractor room to work. It is important to meet with the Region project staff to assure that the construction staging and channelization of traffic during construction is feasible and minimizes impact to the traveling public.

2.3.5 Detour Structures

A. Bridge Width

The lane widths, shy distances, and overall roadway widths for detour structures are determined by the Region. Review and approval of detour roadway widths is done by the HQ Traffic Office.

B. Live Load

All detour structures shall be designed for 75 percent of HL-93 live load unless approved otherwise by the Bridge Design Engineer. Construction requirements, such as a year long expected use, and staging are sufficient reasons to justify designing for a higher live load of HL-93. Use of an HL-93 live load shall be approved by the Bridge Design Engineer.

C. Detour Bridge Type

Detour Structure is typically designed by the Contractor per Contract Documents unless otherwise specified.

D. Detour Bridge Traffic Barrier shall be designed to meet applicable AASHTO design codes.

2.3.6 Retaining Walls and Noise Walls

The requirements for Preliminary Plans for retaining walls and noise walls are similar to the requirements for bridges. The plan and elevation views define the overall limits and the geometry of the wall. The section view will show general structural elements that are part of the wall and the surface finish of the wall face.

The most common types of walls are outlined in Chapter 8 and the *Design Manual* M 22-01. The Bridge and Structures Office is responsible for Preliminary Plans for all nonstandard walls (retaining walls and noise walls) as spelled out in the *Design Manual* M 22-01.

2.3.7 Bridge Deck Drainage

The Hydraulics Branch provides a review of the Preliminary Plan with respect to the requirements for bridge deck drainage. An 11″x17″ print shall be provided to the Hydraulics Branch for their review as soon as the Preliminary Plan has been developed. The length and width of the structure, profile grade, superelevation diagram, and any other pertinent information (such as locations of drainage off the structure) should be shown on the plan. For work with existing structures, the locations of any and all bridge drains shall be noted.

The Hydraulics Branch or the Region Hydraulics staff will determine the type of drains necessary (if any), the location, and spacing requirements. They will furnish any details or modifications required for special drains or special situations.

If low points of sag vertical curves or superelevation crossovers occur within the limits of the bridge, the region should be asked to revise their geometrics to place these features outside the limits of the bridge. If such revisions cannot be made, the Hydraulics Branch will provide details to handle drainage with bridge drains on the structure.

2.3.8 Bridge Deck Protection Systems

An appropriate Bridge Deck Protection System shall be selected for each bridge in accordance with Section 5.7.4. The Preliminary Plan shall note in the lower left margin the type of Bridge Deck Protective System to be utilized on the bridge.

2.3.9 Construction Clearances

Most projects involve construction in and around traffic. Both traffic and construction must be accommodated. Construction clearances and working room must be reviewed at the preliminary plan stage to verify bridge constructability.

For construction clearances for roadways, the Region shall supply the necessary traffic staging information with the bridge site data. This includes temporary lane widths and shoulder or shy distances, allowable or necessary alignment shifts, and any special minimum vertical clearances. With this information, the designer can establish the falsework opening or construction opening.

The horizontal dimension of the falsework or construction opening shall be measured normal to the alignment of the road which the falsework spans. The horizontal dimension of the falsework or construction opening shall be the sum of the temporary traffic lane widths and shoulder or shy distances, plus two 2′ widths for the temporary concrete barriers, plus additional 2′ shy distances behind the temporary barriers. For multi-span falsework openings, a minimum of 2′, and preferably 4′, shall be used for the interior support width. This interior support shall also have 2′ shy on both sides to the two 2-foot wide temporary concrete barriers that will flank the interior support.

The minimum vertical clearance of the construction opening shall normally be 16′-6″ or as specified by the Region. The vertical space available for the falsework must be deep to accommodate the falsework stringers, camber strips, deck, and all deflections. If the necessary depth is greater than the space available, either the minimum vertical clearance for the falsework shall be reduced or the horizontal clearance and span for the falsework shall be reduced, or the profile grade of the structure shall be raised. Any of these alternatives shall be approved by the Region.

Once the construction clearances have been determined the designer should meet with the region to review the construction clearances to ensure compatibility with the construction staging. This review should take place prior to finalizing the preliminary bridge plan.

For railroads, see Section 2.3.2H.

2.3.10 Design Guides for Falsework Depth Requirements

Where falsework is required to support construction of cast-in-place superstructure or segmental elements, the designer of the Preliminary Plan shall confirm with the Region the minimum construction opening. See Section 2.3.9

The bridge designer shall consult with the Construction Support Engineer on falsework depth requirements outlined below.

Bridge designers shall evaluate falsework depth requirements based on the following guidelines:

A. Falsework Spans < 36′ and No Skews

No design is necessary. Provide for a minimum vertical clearance and a minimum falsework depth of 4′ to accommodate:

W36X___ steel beam sections
¾″ camber strip
⅝″plywood
4 x 4 joists
6″ depth for segmental falsework release

B. Falsework Spans > 36′ or Spans with Skews or Limited Falsework Depth

While the falsework or construction openings are measured normal to the alignment which the falsework spans, the falsework span is measured parallel to the bridge alignment.

The Preliminary Plan designer shall perform preliminary design of the falsework sufficiently to determine its geometric and structural feasibility. Shallow, heavy, close-spaced wide-flange steel beams may be required to meet the span requirements within the available depth. The preliminary design shall be based on design guides in the *Standard Specifications* Section 6-02.3(17). Beams shall be designed parallel to the longitudinal axis of the bridge. The falsework span deflection shall be limited according to the *Standard Specifications* Section 6-02.3(17)B: generally span/360 for a single concrete placement, such as a slab, and span/500 for successive concrete placement forming a composite structure. This limits the stresses in the new structure from the construction and concrete placement sequences. Beam sizes shall be shown in the final plans (and in the Preliminary Plans as required) with the Contractor having the option of submitting an alternate design. The designer shall verify availability of the beam sizes shown in the plans.

C. Bridge Widening

For bridge widening where the available depth for the falsework is fixed, designers shall design falsework using shallower and heavier steel beams to fit within the available depth. Beam sizes and details shall be shown in the final plans (and in the Preliminary Plans as required) with the Contractor having the option of using an alternate design. The designer shall verify availability of the beam sizes shown in the plans.

In some cases it may be appropriate to consider a shallower superstructure widening, but with similar stiffness, in order to accommodate the falsework and vertical clearance.

D. Bridge with Skews

Falsework beams shall be laid out and designed for spans parallel to the bridge centerline or perpendicular to the main axis of bending. The centerline of falsework beams shall be located within 2′ of the bridge girder stems and preferably directly under the stems or webs in accordance with the *Standard Specifications* Section 6-02.3(17)E. Falsework beams placed normal to the skew or splayed complicate camber calculations and shall be avoided.

2.3.11 Inspection and Maintenance Access

A. General

FHWA mandates that bridges be inspected every 24 months. The BPO inspectors are required to access bridge components to within 3′ for visual inspection and to access bearings close enough to measure movement. Maintenance personnel need to access damaged members and locations that may collect debris. This is accomplished by using many methods. Safety cables, ladders, bucket trucks, Under Bridge Inspection Truck (UBIT), (see Figure 2.3.11-1), and under bridge travelers are just a few of the most common methods. Preliminary Plan designers need to be aware of these requirements and prepare designs that allow access for bridge inspectors and maintenance personnel throughout the Preliminary Plan and TS&L planning phases.

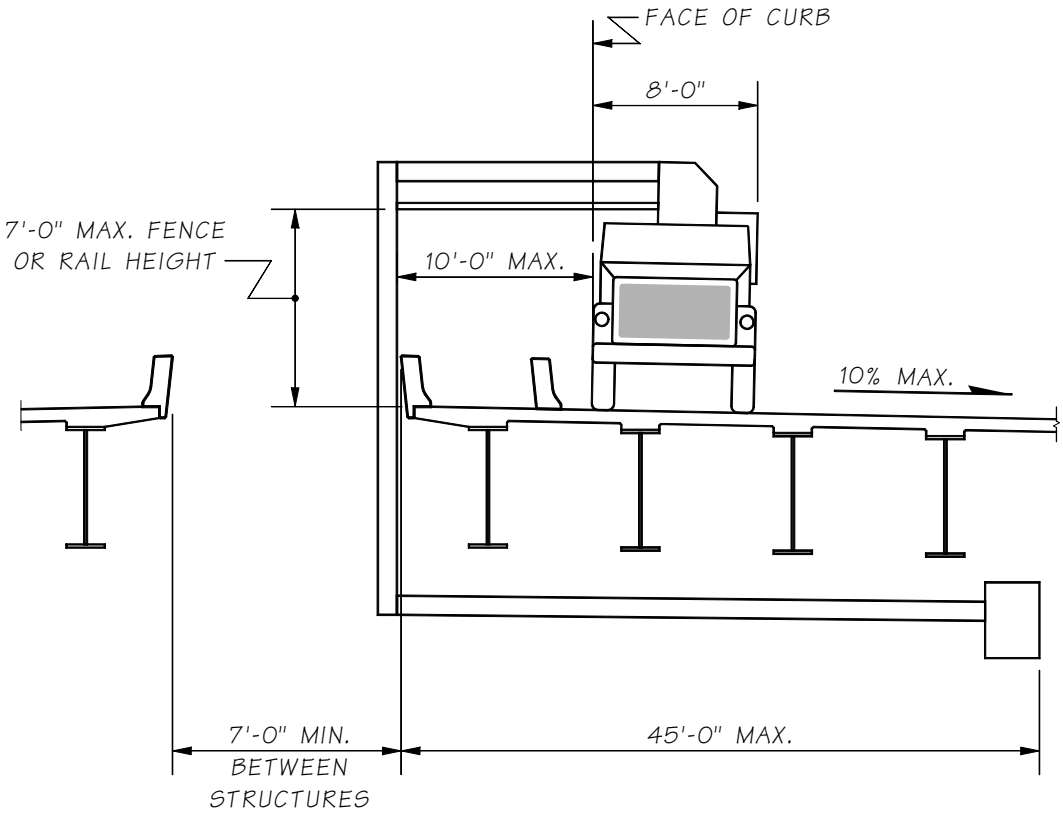

Limits of Under Bridge Inspection Truck
Figure 2.3.11-1

B. Safety Cables

Safety cables strung on steel plate girders or trusses allow for walking access. Care must be given to the application and location. Built-up plate girder bridges are detailed with a safety cable for inspectors walking the bottom flange. However, when the girders become more than 8′ deep, the inspection of the top flange and top lateral connections becomes difficult to access. It is not feasible for the inspectors to stand on the bottom flanges when the girders are less than 5′ deep. On large trusses, large gusset plates (3′ or more wide) are difficult to circumvent. Tie-off cables are best located on the interior side of the exterior girder of the bridge except at large gusset plates. At these locations, cables or lanyard anchors should be placed on the inside face of the truss so inspectors can utilize bottom lateral gusset plates to stand on while traversing around the main truss gusset plates.

C. Travelers

Under bridge travelers, placed on rails that remain permanently on the bridge, can be considered on large steel structures. This is an expensive option, but it should be evaluated for large bridges with high average daily traffic (ADT) because access to the bridge would be limited by traffic windows that specify when a lane can be closed. Some bridges are restricted to weekend UBIT inspection for this reason.

D. Abutment Slopes

Slopes in front of abutments shall provide enough overhead clearance to the bottom of the superstructure to access bearings for inspection and possible replacement (usually 3′ minimum).

E. Inspection Lighting and Access

1. Reinforced Concrete Box and Post-Tensioned Concrete Box Girders

Refer to Section 5.2.6 for design criteria.

2. Composite Steel Box Girders

- All steel box or tub girders shall have inspection lighting and access.
- Inside clear height shall be 5 feet or greater to provide reasonable inspection access.
- Refer to Section 6.4.9 for design criteria.

2.4 Selection of Structure Type

2.4.1 Bridge Types

See Appendix 2.4-A1-1 for a bar graph comparing structure type, span range and cost range.

The required superstructure depth is determined during the preliminary plan development process. The AASHTO LRFD Section 2.5.2.6.3 shows traditional minimum depths for constant depth superstructures. WSDOT has developed superstructure depth-to-span ratios based on past experience.

The AASHTO LRFD Section 2.5.2.6.1, states that it is optional to check deflection criteria, except in a few specific cases. The WSDOT criteria is to check the live load deflection for all structures as specified in AASHTO LRFD Section 3.6.1.3.2 and 2.5.2.6.2.

The superstructure depth is used to establish the vertical clearance that is available below the superstructure. For preliminary plans, the designer should use the more conservative depth determined from either the AASHTO LRFD criteria or the WSDOT criteria outlined below. In either case, the minimum depth includes the deck thickness. For both simple and continuous spans, the span length is the horizontal distance between centerlines of bearings.

Refer to Section 2.3.11 for inspection and maintenance access requirements. Superstructure depth may be influenced when inspection lighting and access is required for certain bridge types.

The superstructure depth may be refined during the final design phase. It is assumed that any refinement will result in a reduced superstructure depth so the vertical clearance is not reduced from that shown in the preliminary plan. However, when profile grade limitations restrict superstructure depth, the preliminary plan designer shall investigate and/or work with the structural designer to determine a superstructure type and depth that will fit the requirements.

A. Reinforced Concrete Slab

1. Application

Used for simple and continuous spans up to 60′.

2. Characteristics

Design details and falsework relatively simple. Shortest construction time for any cast-in-place structure. Correction for anticipated falsework settlement must be included in the dead load camber curve because of the single concrete placement sequence.

3. Depth/Span Ratios

i. Constant Depth

Simple span	1/22
Continuous spans	1/25

ii. Variable Depth

Adjust ratios to account for change in relative stiffness of positive and negative moment sections.

B. Reinforced Concrete Tee-Beam

1. Application

This type of Super Structure is not recommended for new bridges. It could only be used for bridge widening and bridges with tight curvature or unusual geometry.

Used for continuous spans 30′ to 60′. Has been used for longer spans with inclined leg piers.

2. Characteristics

Forming and falsework is more complicated than for a concrete slab. Construction time is longer than for a concrete slab.

3. Depth/Span Ratios

i. Constant Depth

Simple spans	1/13
Continuous spans	1/15

ii. Variable Depth

Adjust ratios to account for change in relative stiffness of positive and negative moment sections.

C. Reinforced Concrete Box Girder

WSDOT restricts the use of cast-in-place reinforced concrete box girder for bridge superstructure. This type of superstructure may only be used for bridges with tight curvatures or irregular geometry upon Bridge Design Engineer approval.

1. Application

This type of super structure is not recommended for new bridges. It could only be used for bridge widening and bridges with tight curvature or unusual geometry.

Used for continuous spans 50′ to 120′. Maximum simple span 100′ to limit excessive dead load deflections.

2. Characteristics

Forming and falsework is somewhat complicated. Construction time is approximately the same as for a tee-beam. High torsional resistance makes it desirable for curved alignments.

3. Depth/Span Ratios*

i. **Constant Depth**

Simple spans	1/18
Continuous spans	1/20

ii. **Variable Depth**

Adjust ratios to account for change in relative stiffness of positive and negative moment sections.

*If the configuration of the exterior web is sloped and curved, a larger depth/span ratio may be necessary.

D. Post-tensioned Concrete Box Girder

1. Application

Normally used for continuous spans longer than 120′ or simple spans longer than 100′. Should be considered for shorter spans if a shallower structure depth is needed.

2. Characteristics

Construction time is somewhat longer due to post-tensioning operations. High torsional resistance makes it desirable for curved alignments.

3. Depth/Span Ratios*

i. **Constant Depth**

Simple spans	1/20.5
Continuous spans	1/25

ii. **Variable Depth**

Two span structures

At Center of span	1/25
At Intermediate pier	1/12.5
Multi-span structures	
At Center of span	1/36
At Intermediate pier	1/18

*If the configuration of the exterior web is sloped and curved, a larger depth/span ratio may be necessary.

E. Prestressed Concrete Sections

1. Application

Local precast fabricators have several standard forms available for precast concrete sections based on the WSDOT standard girder series. These are versatile enough to cover a wide variety of span lengths.

WSDOT standard girders are:

a. WF100G, WF95G, WF83G, WF74G, WF58G, WF50G, WF42G, WF36G, W74G, W58G, W50G, and W42G precast, prestressed concrete I-girders requiring a cast-in-place concrete bridge deck used for spans less than 200′. The number (eg. 95) specifies the girder depth in inches.

   WF95PTG, WF83PTG and WF74PTG post-tensioned, precast segmental I-girders with cast-in-place concrete bridge deck use for simple span up to 230′, and continuous span up to 250′ with continuous post-tensioning over the intermediate piers.

b. U**G* and UF**G* precast, prestressed concrete tub girders requiring a cast-in-place concrete bridge deck are used for spans less than 140′. "U" specifies webs without flanges, "UF" specifies webs with flanges, ** specifies the girder depth in inches, and * specifies the bottom flange width in feet. U**G* girders have been precast as shallow as 26″.

   Post-tensioned, precast, prestressed tub girders with cast-in-place concrete bridge deck are used for simple span up to 160′ and continuous span up to 200′.

c. W65DG, W53DG, W41DG, and W35DG precast, prestressed concrete decked bulb tee girders requiring an 1 ½" minimum HMA overlay roadway surface used for span less than 150′, with the Average Daily Truck limitation of 30,000 or less.

d. W62BTG, W38BTG, and W32BTG precast, prestressed concrete bulb tee girders requiring a cast-in-place concrete deck for simple spans up to 130′.

e. 12-inch, 18-inch, 26-inch, 30-inch, and 36-inch precast, prestressed slabs requiring 5″ minimum cast-in-place slab used for spans less than 100′.

f. 26-inch precast, prestressed ribbed girder, deck double tee, used for span less than 60′, and double tee members requiring an HMA overlay roadway surface used for span less than 40′.

g. WF36TDG, WF42TDG, WF50TDG, WF58TDG, WF66TDG, WF74TDG, WF83TDG, WF95TDG, and WF100TDG precast, prestressed concrete wide flange girders requiring a 5" minimum cast in place slab for simple spans up to 225'.

h. WF39DG, WF45DG, WF53DG, WF61DG, WF69DG, WF77DG, WF86DG, WF98DG, and WF103DG precast, prestressed concrete wide flange girders requiring an 1 ½" minimum HMA overlay roadway surface used for span less than 195′, with the Average Daily Truck limitation of 30,000 or less.

2. Characteristics

Superstructure design is quick for pre-tensioned girders with proven user-friendly software (PGSuper, PGSplice, and QConBridge)

Construction details and forming are fairly simple. Construction time is less than for a cast-in-place bridge. Little or no falsework is required. Falsework over traffic is usually not required; construction time over existing traffic is reduced.

Precast girders usually require that the bridge roadway superelevation transitions begin and end at or near piers; location of piers should consider this. The Region may be requested to adjust these transition points if possible.

Fully reinforced, composite 8 inch cast-in-place deck slabs continuous over interior piers or reinforced 5 inch cast-in-place deck slabs continuous over interior piers have been used with e. and f.

F. Composite Steel Plate Girder

1. Application

Used for simple spans up to 260′ and for continuous spans from 120′ to 400′. Relatively low dead load when compared to a concrete superstructure makes this bridge type an asset in areas where foundation materials are poor.

2. Characteristics

Construction details and forming are fairly simple Construction time is comparatively short. Shipping and erecting of large sections must be reviewed. Cost of maintenance is higher than for concrete bridges. Current cost information should be considered because of changing steel market conditions.

3. Depth/Span Ratios

i. Constant Depth

Simple spans	1/22
Continuous spans	1/25

ii. Variable Depth

@ Center of span	1/40
@ Intermediate pier	1/20

G. Composite Steel Box Girder

1. Use

Used for simple spans up to 260′ and for continuous spans from 120′ to 400′. Relatively low dead load when compared to a concrete superstructure makes this bridge type an asset in areas where foundation materials are poor.

Inside clear height of less than 5 feet shall not be used because reasonable inspection access cannot be provided.

2. Characteristics

Construction details and forming are more difficult than for a steel plate girder. Shipping and erecting of large sections must be reviewed. Current cost information should be considered because of changing steel market conditions.

3. Depth/Span Ratios

i. **Constant Depth**

Simple spans	1/22
Continuous spans	1/25

ii. **Variable Depth**

At Center of span	1/40
At Intermediate pier	1/20

Note: Sloping webs are not used on box girders of variable depth.

H. Steel Truss

1. Application

Used for simple spans up to 300′ and for continuous spans up to 1,200′. Used where vertical clearance requirements dictate a shallow superstructure and long spans or where terrain dictates long spans and construction by cantilever method.

2. Characteristics

Construction details are numerous and can be complex. Cantilever construction method can facilitate construction over inaccessible areas. Through trusses are discouraged because of the resulting restricted horizontal and vertical clearances for the roadway.

3. Depth/Span Ratios

a. Simple spans	1/6
b. Continuous spans	
@ Center of span	1/18
@ Intermediate pier	1/9

I. Segmental Concrete Box Girder

1. Application

Used for continuous spans from 200′ to 700′. Used where site dictates long spans and construction by cantilever method.

2. Characteristics

Use of travelers for the form apparatus facilitates the cantilever construction method enabling long-span construction without falsework. Precast concrete segments may be used. Tight geometric control is required during construction to ensure proper alignment.

3. Depth/Span Ratios

Variable depth	
At Center of span	1/50
At Intermediate pier	1/20

J. Railroad Bridges

1. Use

For railway over highway grade separations, most railroad companies prefer simple span steel construction. This is to simplify repair and reconstruction in the event of derailment or some other damage to the structure.

2. Characteristics

The heavier loads of the railroad live load require deeper and stiffer members than for highway bridges. Through girders can be used to reduce overall structure depth if the railroad concurs. Piers should be normal to the railroad to eliminate skew loading effects.

3. Depth/Span Ratios

Constant depth	
Simple spans	1/12
Continuous two span	1/14
Continuous multi-span	1/15

K. Timber

1. Use

Generally used for spans under 40′. Usually used for detour bridges and other temporary structures. Timber bridges are not recommended for WSDOT Bridges.

2. Characteristics

Excellent for short-term duration as for a detour. Simple design and details.

3. Depth/Span Ratios

Constant depth	
Simple span – Timber beam	1/10
Simple span – Glulam beam	1/12
Continuous spans	1/14

L. Other

Bridge types such as cable-stayed, suspension, arch, tied arch, and floating bridges have special and limited applications. The use of these bridge types is generally dictated by site conditions. Preliminary design studies will generally be done when these types of structures are considered.

2.4.2 Wall Types

Retaining walls, wingwalls, curtain walls, and tall closed abutment walls may be used where required to shorten spans or superstructure length or to reduce the width of approach fills. The process of selecting a type of retaining wall should economically satisfy structural, functional, and aesthetic requirements and other considerations relevant to a specific site. A detailed listing of the common wall types and their characteristics can be found in Chapter 8.

2.4.3 Buried Structure Types

Tunnel and Culverts may be used where required in accordance to specific site conditions. The process of selecting a type of buried structure should economically satisfy structural, functional, and aesthetic requirements and other considerations relevant to a specific site. A detailed listing of the common types and their characteristics can be found in Chapter 8.

2.5 Aesthetic Considerations

2.5.1 General Visual Impact

Bridge, retaining walls and noise walls have a strong visual impact in any landscape. Steps must be taken to assure that even the most basic structure will complement rather than detract from its surroundings. The EIS and bridge site data submitted by the Region should each contain a discussion on the aesthetic importance of the project site. This commentary, together with submitted video and photographs, will help the designer determine the appropriate structure type.

The State Bridge and Structures Architect should be contacted early in the preliminary bridge plan process for input on aesthetics. Normally, a visit to the bridge site with the State Bridge and Structures Architect and Region design personnel should be made.

Aesthetics is a very subjective element that must be factored into the design process in the otherwise very quantitative field of structural engineering. Bridges that are structurally efficient using the least material possible are generally visually well proportioned. However, the details such as pier walls, columns, and crossbeams require special attention to ensure a structure that will enhance the general vicinity.

For large projects incorporating several to many bridges and retaining walls, an architectural theme is frequently developed to bring consistency in structure type, details, and architectural appointments. The preliminary plan designer shall work with the State Bridge and Structures Architect to implement the theme.

2.5.2 End Piers

A. Wingwalls

The size and exposure of the wingwall at the end pier should balance, visually, with the depth and type of superstructure used. For example, a prestressed girder structure fits best visually with a 15′ wingwall (or curtain wall/retaining wall). However, there are instances where a 20′ wingwall (or curtain wall/retaining wall) may be used with a prestressed girder (maximizing a span in a remote area, for example or with deep girders where they are proportionally better in appearance). The use of a 20′ wingwall shall be approved by the Bridge Design Engineer and the State Bridge and Structures Architect.

It is less expensive for bridges of greater than 40′ of overall width to be designed with wingwalls (or curtain wall/retaining wall) than to use a longer superstructure.

B. Retaining Walls

For structures at sites where profile, right of way, and alignment dictate the use of high exposed wall-type abutments for the end piers, retaining walls that flank the approach roadway can be used to retain the roadway fill and reduce the overall structure length. Stepped walls are often used to break up the height, and allow for landscape planting. A curtain wall runs between the bridge abutment and the heel of the abutment footing. In this way, the joint in the retaining wall stem can coincide with the joint between the abutment footing and the retaining wall footing. This simplifies design and provides a convenient breaking point between design responsibilities if the retaining walls happen to be the responsibility of the Region. The length shown for the curtain wall dimension is an estimated dimension based

on experience and preliminary foundation assumptions. It can be revised under design to satisfy the intent of having the wall joint coincide with the end of the abutment footing.

C. Slope Protection

The Region is responsible for making initial recommendations regarding slope protection. It should be compatible with the site and should match what has been used at other bridges in the vicinity. The type selected shall be shown on the Preliminary Plan. It shall be noted on the "Not Included in Bridge Quantities" list.

D. Noise Walls

Approval of the State Bridge and Structures Architect is required for the final selection of noise wall appearance, finish, materials and configuration.

2.5.3 Intermediate Piers

The size, shape, and spacing of the intermediate pier elements must satisfy two criteria. They must be correctly sized and detailed to efficiently handle the structural loads required by the design and shaped to enhance the aesthetics of the structure.

The primary view of the pier must be considered. For structures that cross over another roadway, the primary view will be a section normal to the roadway. This may not always be the same view as shown on the Preliminary Plan as with a skewed structure, for example. This primary view should be the focus of the aesthetic review.

Tapers and flares on columns should be kept simple and structurally functional. Fabrication and constructability of the formwork of the pier must be kept in mind. Crossbeam ends should be carefully reviewed. Skewed bridges and bridges with steep profile grades or those in sharp vertical curves will require special attention to detail.

Column spacing should not be so small as to create a cluttered look. Column spacing should be proportioned to maintain a reasonable crossbeam span balance.

2.5.4 Barrier and Wall Surface Treatments

A. Plain Surface Finish

This finish will normally be used on structures that do not have a high degree of visibility or where existing conditions warrant. A bridge in a remote area or a bridge among several existing bridges all having a plain finish would be examples.

B. Formliner Finishes

These finishes are the most common and an easy way to add a decorative texture to a structure. Variations on this type of finish can be used for special cases. The specific areas to receive this finish should be reviewed with the State Bridge and Structures Architect.

C. Pigmented Sealer

The use of a pigmented sealer is used to control graffiti and can also be an aesthetic enhancement. Most commonly it is always used in urban areas. The selection should be reviewed with the Bridge Architect and the Region.

D. Architectural Details

Rustication grooves, relief panels, pilasters, and decorative finishes may visually improve appearance at transitions between different structure types such as cast-in-place abutments to structural earth retaining walls. Contact the State Bridge and Structures Architect for guidance.

In special circumstances custom designs may be provided. Designs rising to the level of art shall be subject to the procedures outlined in the *Design Manual* M 22-01

2.5.5 Superstructure

The horizontal elements of the bridge are perhaps the strongest features. The sizing of the structure depth based on the span/depth ratios in Section 2.4.1, will generally produce a balanced relationship.

Designs rising to the level of "Art" shall be subject to the procedures outlined in the *Design Manual* M 22-01.

Haunches or rounding of girders at the piers can enhance the structure's appearance. The use of such features should be kept within reason considering fabrication of materials and construction of formwork. The amount of haunch should be carefully reviewed for overall balance from the primary viewing perspective. Haunches are not limited to cast-in-place superstructures, but may be used in special cases on precast, prestressed I girders. They require job-specific forms which increase cost, and standard design software is not directly applicable.

The slab overhang dimension should approach that used for the structure depth. This dimension should be balanced between what looks good for aesthetics and what is possible with a reasonable slab thickness and reinforcement.

For box girders, the exterior webs can be sloped, but vertical webs are preferred. The amount of slope should not exceed l½: l for structural reasons, and should be limited to 4:1 if sloped webs are desired. Sloped webs should only be used in locations of high aesthetic impact.

When using precast, prestressed girders, all spans shall be the same series, unless approved otherwise by the Bridge Design Engineer.

2.6 Miscellaneous

2.6.1 Structure Costs

See Section 12.3 for preparing cost estimates for preliminary bridge design.

2.6.2 Handling and Shipping Precast Members and Steel Beams

Bridges utilizing precast concrete beams or steel beams need to have their access routes checked and sites reviewed to be certain that the beams can be transported to the site. It must also be determined that they can be erected once they reach the site.

Both the size and the weight of the beams must be checked. Likely routes to the site must be adequate to handle the truck and trailer hauling the beams. Avoid narrow roads with sharp turns, steep grades, and/or load-rated bridges, which may prevent the beams from reaching the site. The Bridge Preservation Office should be consulted for limitations on hauling lengths and weights.

Generally 252 kips is the maximum weight of a girder that may be hauled by truck.

The site should be reviewed for adequate space for the contractor to set up the cranes and equipment necessary to pick up and place the girders. The reach and boom angle should be checked and should accommodate standard cranes.

2.6.3 Salvage of Materials

When a bridge is being replaced or widened, the material being removed should be reviewed for anything that WSDOT may want to salvage. Items such as aluminum rail, luminaire poles, sign structures, and steel beams should be identified for possible salvage. The Region should be asked if such items are to be salvaged since they will be responsible for storage and inventory of these items.

2.7 WSDOT Standards for Highway Bridges

2.7.1 Design Elements

The following are standard design elements for bridges carrying highway traffic. They are meant to provide a generic base for consistent, clean looking bridges, and to reduce design and construction costs. Modification of some elements may be required, depending on site conditions. This should be determined on a case-by-case basis during the preliminary plan stage of the design process.

A. General

Fractured Fin Finish shall be used on the exterior face of the traffic barrier. All other surfaces shall be Plain Surface Finish.

Exposed faces of wingwalls, columns, and abutments shall be vertical. The exterior face of the traffic barrier and the end of the intermediate pier crossbeam and diaphragm shall have a 1:12 backslope.

B. Substructure

End piers use the following details:

15′ wingwalls with prestressed girders up to 74″ in depth or a combination of curtain wall/retaining walls.

Stub abutment wall with vertical face. Footing elevation, pile type (if required), and setback dimension are determined from recommendations in the Materials Laboratory Geotechnical Services Branch Geotechnical Report.

Intermediate piers use the following details:

"Semi-raised" Crossbeams – The crossbeam below the girders is designed for the girder and slab dead load, and construction loads. The crossbeam and the diaphragm together are designed for all live loads and composite dead loads. The minimum depth of the crossbeam shall be 3′.

"Raised" Crossbeams – The crossbeam is at the same level as the girders are designed for all dead and live loads.

Round Columns – Columns shall be 3′ to 6′ inch diameter. Dimensions are constant full height with no tapers. Bridges with roadway widths of 40′ or less will generally be single column piers. Bridges with roadway widths of greater the 40′ shall have two or more columns, following the criteria established in Section 2.3.1.H. Oval or rectangular column may be used if required for structural performance or bridge visual.

C. Superstructure

Concrete Slab – 7½ inch minimum thickness with epoxy coated steel reinforcing bars in general with 5 inch minimum thickness for deck girders and 8 inch minimum thickness for steel girders.

Prestressed Girders – Girder spacing will vary depending on roadway width and span length. The slab overhang dimension is approximately half of the girder spacing. Girder spacing typically ranges between 6′ and 12′.

Intermediate Diaphragms – Locate in accordance with Table 5.6.2-1 and Section 5.6.4.C. Provide full or partial depth in accordance with Section 5.6.4.C.4.

End Diaphragms – "End Wall on Girder" type.

Traffic Barrier – Use 3'-6" high "F-shape" or Single-sloped barrier to meet worker fall protection requirements.

Fixed Diaphragm at Inter. Piers – Full or partial width of crossbeam between girders and outside of the exterior girders.

Hinged Diaphragm at Inter. Piers – Partial width of crossbeam between girders. Sloped curtain panel full width of crossbeam outside of exterior girders, fixed to ends of crossbeam.

BP Rail – 3′–6″ overall height for pedestrian traffic. 4′–6″ overall height for bicycle traffic.

Sidewalk – 6-inch height at curb line. Transverse slope of -0.02 feet per foot towards the curb line.

Sidewalk barrier – Inside face is vertical. Outside face slopes 1:12 outward.

The following table provides guidance regarding maximum bridge superstructure length beyond which the use of either intermediate expansion joints or modular expansion joints at the ends is required.

Superstructure Type	Maximum Length (Western WA)		Maximum Length (Eastern WA)	
	Stub Abutment	L-Abutment	Stub Abutment	L-Abutment
Concrete Superstructure				
Prestressed Girders*	450'	900'	450'	900'
PT Spliced Girder **	400'	700' ***	400'	700' ***
CIP-PT Box Girders **	400'	400'	400'	700' ***
Steel Superstructure				
Steel Plate Girder Steel Box Girder	300'	1000'	300'	800'

* Based upon 0.16" creep shortening per 100' of superstructure length, and 0.12" shrinkage shortening per 100' of superstructure length

** Based upon 0.31" creep shortening per 100' of superstructure length, and 0.19" shrinkage shortening per 100' of superstructure length

*** Can be increased to 800' if the joint opening at 64F at time of construction is specified in the expansion joint table to be less than the minimum installation width of 1½". This condition is acceptable if the gland is already installed when steel shapes are installed in the blockout. Otherwise (staged construction for example) the gland would need to be installed at temperatures less than 45ºF.

Table 2.7.1

D. Examples

Appendices 2.3-A2-1 and 2.7-A1-1 detail the standard design elements of a standard highway bridge.

The following bridges are good examples of a standard highway bridge. However, they do have some modifications to the standard.

SR 17 Undercrossing 395/110	Contract 3785
Mullenix Road Overcrossing 16/203E&W	Contract 4143

2.7.2 Detailing the Preliminary Plan

The Bridge or Culvert Preliminary Plan is used and reviewed by the Bridge and Structures Office or consultant who will do the structural design, Region designers and managers, Geotechnical engineers, Hydraulics engineers, Program managers, FHWA engineers and local agency designers and managers. It sometimes is used in public presentation of projects. With such visibility it is important that it's detailing is clear, complete, professional, and attractive. The designer, detailer, and checker shall strive for completeness and consistency in information, layout, line style, and fonts. Appendix B contains examples of Preliminary Plans following time-proven format that may be helpful. See also Chapter 11.

Typical sheet layout is as follows:

1. Plan and Elevation views. (This sheet ultimately becomes the Layout sheet of the design plan set)
2. Typical Section including details of stage construction.

   Superelevation diagrams, tables of existing elevations, Notes to Region, and other miscellaneous details as required shall go on Sheet 2, 3, or 4, as many as required. See also the Preliminary Plan Checklist for details, dimensions, and notes typically required. The completed plan sheets shall be reviewed for consistency by the Preliminary Plans Detailing Specialist.

2.8 Bridge Security

2.8.1 General

Security based bridge design and its direct correlation to modern social issues is addressed in this section. Criminal activity, illegal encampments, graffiti, hindrance to economic development and public eyesore create unwanted expensive. They also pose safety hazard for State Maintenance and Operations practices. The issue exists in urban areas as well as rural and recreational locales.

Bridges are dominant structures in landscapes. They are held to a higher standard of design due to their influence on communities, where economic and social settings are affected by their quality. Initial project cost savings may quickly be overshadowed by increased externalized costs. These externalized costs are born by local municipalities and businesses as well as other departments within WSDOT.

WSDOT bridge inspectors are required to inspect all bridges at least once every 24 months. The presence of the illegal encampments, as well as garbage, hypodermic needles, and feces often makes it impossible to do a close, hands-on inspection of the abutments and bearings of bridges. The Bridge Preservation Office has requested that maintenance clean up transient camps when it becomes difficult or impossible to do an adequate inspection of the bridges. Campfires set by the homeless have also caused damage to bridges.

Bridge Maintenance Crews also face the same difficulty when they need to do repair work on bridges in the urban area. Clean up requires (per law) posting the bridge seventy-two hours prior to any work. Material picked up is tagged, bagged, and stored for retrieval. Often the offenders are back the next day.

2.8.2 Design

Design is determined on a case by case basis using two strategies. These strategies are universally accepted best practices. The first, Crime Prevention through Environmental Design (CPTED), is a multi-disciplinary approach to deterring criminal behavior. The second, Context Sensitive Solutions (CSS), is also multi-disciplinary and focuses on project development methods. Multi-disciplinary teams consist of engineers and architects but may include law enforcement, local businesses, social service providers, and psychologists.

A. CPTED principals are based upon the theory that the proper design and effective use of the built environment can reduce crime, reduce the fear of crime, and improve the quality of life. Built environment implementations of CPTED seek to dissuade offenders from committing crimes by manipulating the built environment in which those crimes proceed from or occur. The six main concepts are territoriality, surveillance, access control, image/maintenance, activity support and target hardening. Applying all of these strategies is key when preventing crime in any neighborhood or right-of-way.

Natural surveillance and access control strategies limit the opportunity for crime. Territorial reinforcement promotes social control through a variety of measures. These may include enhanced aesthetics or public art. Image/maintenance and activity support provide the community with reassurance and the ability to stop crime by themselves. Target hardening strategies may involve fencing or concrete enclosures or they may include all techniques to resolve crime or chronic trespass into one final step.

B. WSDOT implements FHWA's CSS design development principles through *Executive Order* E 1028. The CSS methods require designers to consider the physical, economic, and social setting of a project. Stakeholder's interests are to be accounted for; including area residents and business owners.

2.8.3 Design Criteria

New bridges need to address design for the environment by basic criteria:

- Slopes under bridges need to be steep slope, and hardened with something like solid concrete so that flat areas cannot be carved into the hillside. Flat areas under bridge superstructures attract inappropriate uses and should be omitted.
- Illegal urban campers have been known to build shelters between the concrete girders. Abutment walls need to be high enough that they deny access to the superstructure elements. When it is not feasible to design for deterrence the sites need to be hardened with fencing buried several feet into the soil or with solid concrete walls. See Figures 2.8.3-1 and 2.8.3-2 for high security fence and concrete wall examples.
- Regular chain link is easy cut, therefore stouter material needs to be specified.
- Landscape design should coordinate with region or headquarters landscape architects. Areas need to be visible to law enforcement.

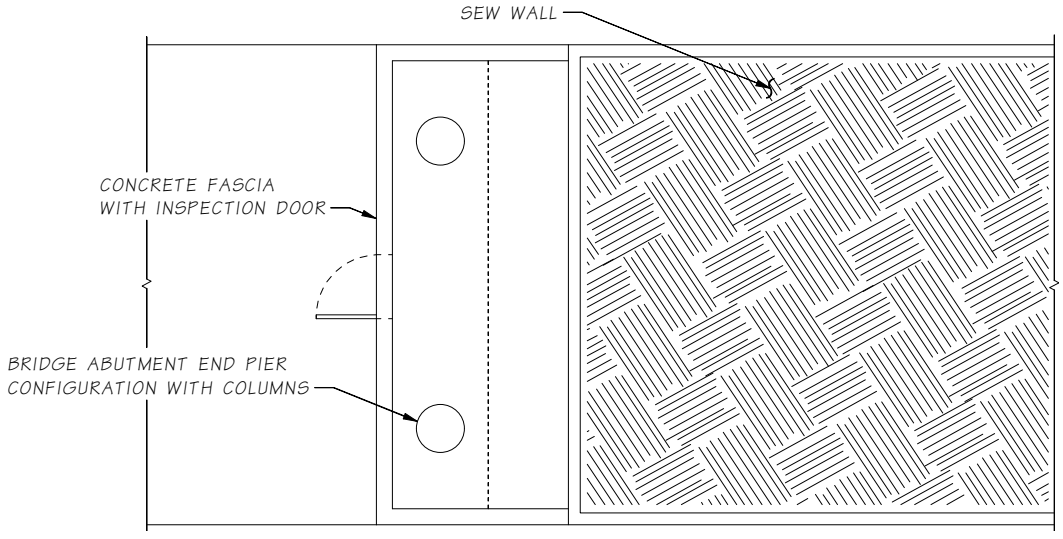

Plan
Figure 2.8.3-1

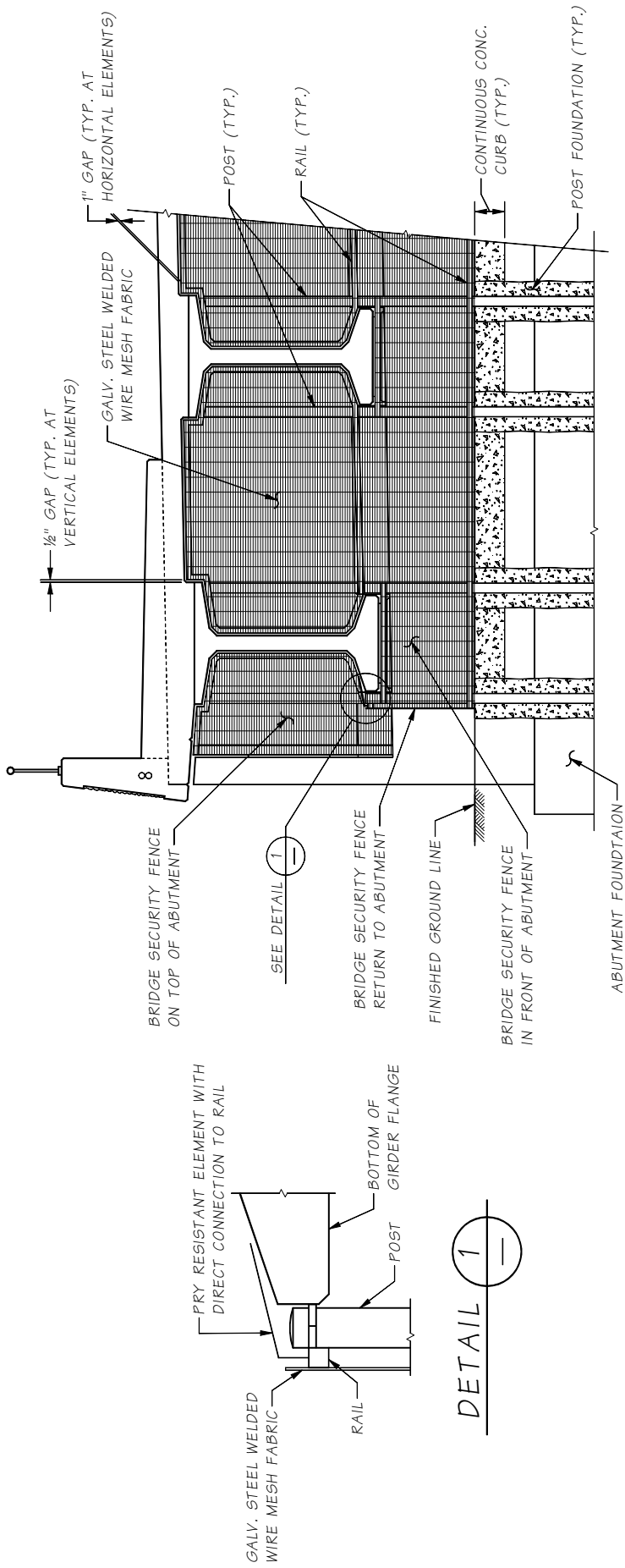
1" GAP (TYP. AT HORIZONTAL ELEMENTS)
POST (TYP.)
RAIL (TYP.)
CONTINUOUS CONC. CURB (TYP.)
POST FOUNDATION (TYP.)
GALV. STEEL WELDED WIRE MESH FABRIC
½" GAP (TYP. AT VERTICAL ELEMENTS)
BRIDGE SECURITY FENCE ON TOP OF ABUTMENT
SEE DETAIL 1
BRIDGE SECURITY FENCE RETURN TO ABUTMENT
FINISHED GROUND LINE
BRIDGE SECURITY FENCE IN FRONT OF ABUTMENT
ABUTMENT FOUNDTAION
PRY RESISTANT ELEMENT WITH DIRECT CONNECTION TO RAIL
BOTTOM OF GIRDER FLANGE
POST
GALV. STEEL WELDED WIRE MESH FABRIC
RAIL
DETAIL 1

Figure 2.8.3-2

2.9 Bridge Standard Drawings

2-B-1	Bridge Preliminary Plan Example - Precast Slab Bridge
2-B-2	Bridge Preliminary Plan Example - Temporary Bridge
2-B-3	Bridge Preliminary Plan Example - Bridge Cross Sections
2-B-4	Bridge Preliminary Plan Example - Precast Tub Girder Bridge
2-B-5	Bridge Preliminary Plan Example - Bridge Cross Section
2-B-6	Bridge Preliminary Plan Example - Roadway Data
2-B-7	Bridge Preliminary Plan Example - Precast Girder Bridge Widening
2-B-8	Bridge Preliminary Plan Example - Widened Bridge Cross Section
2-B-9	Bridge Preliminary Plan Example - Existing Roadway Survey Data
2.3-A2	Bridge Redundancy Criteria
2.4-A1	Bridge Selection Guide
2.7-A1	Standard Superstructure Elements

2.10 Appendices

Appendix 2.2-A1	Bridge Site Data General
Appendix 2.2-A2	Bridge Site Data Rehabilitation
Appendix 2.2-A3	Bridge Site Data Stream Crossing
Appendix 2.2-A4	Preliminary Plan Checklist
Appendix 2.2-A5	Request For Preliminary Geotechnical Information
Appendix 2.3-A1	Bridge Stage Construction Comparison

Washington State Department of Transportation

Bridge Site Data General

Region	Made By	Date

Bridge Information

SR	Bridge Name	Control Section	Project No.

Highway Section	Section, Township & Range	Datum

Structure width between curbs ?

Will the structure be widened in a contract subsequent to this contract ? ☐ Yes ☐ No ☐ N/A

Which side and amount ?

Will the roadway under the structure be widened in the future? ☐ Yes ☐ No ☐ N/A

Stage construction requirements? ☐ Yes ☐ No ☐ N/A

Should the additional clearance for off-track railroad maintenance equipment be provided?

Can a pier be placed in the median? ☐ Yes ☐ No ☐ N/A

What are the required falsework or construction opening dimensions ?

Are there detour or shoofly bridge requirements? (If Yes, attach drawings) ☐ Yes ☐ No ☐ N/A

Can the R/W be adjusted to accommodate toe of approach fills? ☐ Yes ☐ No ☐ N/A

What is the required vertical clearance?

What is the available depth for superstructure?

Are overlays planned for a contract subsequent to this contract? ☐ Yes ☐ No ☐ N/A

Can profile be revised to provide greater or less clearance? ☐ Yes ☐ No ☐ N/A

If Yes, which line and how much?

Will bridge be constructed before, with or after approach fill? ☐ Before ☐ With ☐ After ☐ N/A

What are expected foundation conditions?

When can foundation drilling be accomplished?

Is slope protection or riprap required for the bridge end slopes? ☐ Yes ☐ No ☐ N/A

Are sidewalks to be provided? ☐ Yes ☐ No ☐ N/A

If Yes, which side and width?

Will there be bicycle traffic using this bridge? ☐ Yes ☐ No ☐ N/A

If Yes, which side(s)?

Will signs or illumination be attached to the structure? ☐ Yes ☐ No ☐ N/A

Will utility conduits be incorporated in the bridge? ☐ Yes ☐ No ☐ N/A

What do the bridge barriers transition to?

Furnish type and location of existing features within the limits of this project, such as retaining walls, sign support structures, utilities, buildings, powerlines, etc.

Are there bridge security issues, such as the presence of illegal campers, that require design considerations?

Any other data relative to selection of type, including your recommendations?

Attachments

- ☐ Vicinity Map
- ☐ Bridge Site Contour Map
- ☐ Specific Roadway sections at bridge site and approved roadway sections
- ☐ Vertical Profile Data
- ☐ Horizontal Curve Data
- ☐ Superelevation Transition Diagrams
- ☐ Tabulated field surveyed and measured stations, offsets, and elevations of existing roadways (See Design Manual M 22-01, Chapter 710)
- ☐ Photographs and video of structure site, adjacent existing structures and surrounding terrain
- ☐
- ☐

DOT Form 235-002 EF
Revised 12/2014

Washington State Department of Transportation

Bridge Site Data Rehabilitation

Region	Made By	Date

Bridge Information

SR	Bridge Name	Control Section	Project No.

Highway Section	Section, Township & Range	Vertical Datum

Existing roadway width, curb to curb _____ Left of ℄ _____ Right of ℄ _____

Proposed roadway width, curb to curb _____ Left of ℄ _____ Right of ℄ _____

Existing wearing surface *(concrete, HMA, HMA w /membrane, MC, epoxy, other)* _____ Thickness _____

Existing drains to be plugged, modified, moved, other? _____

Proposed overlay *(HMA, HMA w /membrame, MC, epoxy)* _____ Thickness _____

Is bridge rail to be modified? ☐ Yes ☐ No

Existing rail type _____

Proposed rail replacement type _____

Will terminal design "F" be required? ☐ Yes ☐ No

Will utilities be placed in the new barrier? ☐ Yes ☐ No

Will the structure be overlayed with or after rail replacement? ☐ With Rail Replacement ☐ After Rail Replacement

Condition of existing expansion joints _____

Existing expansion joints watertight? ☐ Yes ☐ No

	@ curb line	@ ℄ roadway	@ curb line
Measure width of existing expansion joint, normal to skew.	_____ Inch	_____ Inch	_____ Inch

Estimate structure temperature at time of expansion joint measurement _____

Type of existing expansion joint _____

Describe damage, if any, to existing expansion joints _____

Existing Vertical Clearance _____

Proposed Vertical Clearance (at curb lines of traffic barrier) _____

Attachments

☐ Video tape of project

☐ Sketch indicating points at which expansion joint width was measured.

☐ Photographs of existing expansion joints.

☐ Existing deck chloride and delamination data.

☐ Roadway deck elevations at curb lines (10-foot spacing)

DOT Form 235-002A EF
Revised 5/05

Washington State Department of Transportation

Bridge Site Data Stream Crossings

Region	Made By	Date

Bridge Information

SR	Bridge Name	Control Section	Project No.

Highway Section	Section, Township & Range	Datum (e.g. NGVD29, NAVD88, USGS)

Name of Stream	Tributary of

Elevation of W.S. *(@ Date/Time of survey)*

_____

Streambed Material

☐ Fines ☐ Gravel ☐ Boulder
☐ Sand ☐ Cobble

☐ **Non-Tidal**

	Flow (CFS)	WSE (ft)
2-YR	_____	_____
100-YR	_____	_____
500-YR	_____	_____

☐ **Tidal**

	Flow (CFS)	WSE (ft)
2-YR	_____	_____
100-YR	_____	_____
500-YR	_____	_____
MLLW		_____
MHHW		_____

Amount and Character of Drift

_____

Manning's "N" Value *(Est.)*

_____

Attachments

☐ Site Contour Map *(See Sect. 710.04 WSDOT Design Manual)*

☐ Highway Alignment and Profile *(refer to base map and profiles)*

☐ Streambed: Profile and Cross Sections *(See Sect. 710.04 WSDOT Design Manual)*

☐ Photographs

☐ Character of Stream Banks *(e.g., rock, silt.)* / Location of Solid Rock

☐ Other Data Relative to Selection of Type and Design of Bridge, Including your Recommendations *(e.g., requirements of riprap, permission of piers in channel.)*

DOT Form 235-001 EF
Revised 08/2011

Appendix 2.2-A4 Preliminary Plan Checklist

Project _____ SR _____ Prelim. Plan by _____ Check by _____ Date_____

Plan

_____ Survey Lines and Station Ticks
_____ Survey Line Intersection Angles
_____ Survey Line Intersection Stations
_____ Survey Line Bearings
_____ Roadway and Median Widths
_____ Lane and Shoulder Widths
_____ Sidewalk Width
_____ Connection/Widening for Guardrail/Barrier
_____ Profile Grade and Pivot Point
_____ Roadway Superelevation Rate (if constant)
_____ Lane Taper and Channelization Data
_____ Traffic Arrows
_____ Mileage to Junctions along Mainline
_____ Back to Back of Pavement Seats
_____ Span Lengths
_____ Lengths of Walls next to/part of Bridge
_____ Pier Skew Angle
_____ Bridge Drains, or Inlets off Bridge
_____ Existing drainage structures
_____ Existing utilities Type, Size, and Location
_____ New utilities - Type, Size, and Location
_____ Luminaires, Junction Boxes, Conduits
_____ Bridge mounted Signs and Supports
_____ Contours
_____ Top of Cut, Toe of Fill
_____ Bottom of Ditches
_____ Test Holes (if available)
_____ Riprap Limits
_____ Stream Flow Arrow
_____ R/W Lines and/or Easement Lines
_____ Points of Minimum Vertical Clearance
_____ Horizontal Clearance
_____ Exist. Bridge No. (to be removed, widened)
_____ Section, Township, Range
_____ City or Town
_____ North Arrow
_____ SR Number
_____ Bearing of Piers, or note if radial

Miscellaneous

_____ Structure Type
_____ Live Loading
_____ Undercrossing Alignment Profiles/Elevs.
_____ Superelevation Diagrams
_____ Curve Data
_____ Riprap Detail
_____ Plan Approval Block
_____ Notes to Region
_____ Names and Signatures
_____ Not Included in Bridge Quantities List
_____ Inspection and Maintenance Access

Elevation

_____ Full Length Reference Elevation Line
_____ Existing Ground Line x ft. Rt of Survey Line
_____ End Slope Rate
_____ Slope Protection
_____ Pier Stations and Grade Elevations
_____ Profile Grade Vertical Curves
_____ BP/Pedestrian Rail
_____ Barrier/Wall Face Treatment
_____ Construction/Falsework Openings
_____ Minimum Vertical Clearances
_____ Water Surface Elevations and Flow Data
_____ Riprap
_____ Seal Vent Elevation
_____ Datum
_____ Grade elevations shown are equal to …
_____ For Embankment details at bridge ends...
Indicate F, H, or E at abutments and piers

Typical Section

_____ Bridge Roadway Width
_____ Lane and Shoulder Widths
_____ Profile Grade and Pivot Point
_____ Superelevation Rate
_____ Survey Line
_____ Overlay Type and Depth
_____ Barrier Face Treatment
_____ Limits of Pigmented Sealer
_____ BP/Pedestrian Rail dimensions
_____ Stage Construction, Stage traffic
_____ Locations of Temporary Concrete Barrier
_____ Closure Pour
_____ Structure Depth/Prestressed Girder Type
_____ Conduits/Utilities in bridge
_____ Substructure Dimensions
_____ Bridge Inspection Lighting and Access

Left Margin

_____ Job Number
_____ Bridge (before/with/after) Approach Fills
_____ Structure Depth/Prestressed Girder Type
_____ Deck Protective System
_____ Coast Guard Permit Status (Requirement for all water crossing)
_____ Railroad Agreement Status
_____ Points of Minimum Vertical Clearance
_____ Cast-in-Place Concrete Strength

Right Margin

_____ Control Section
_____ Project Number
_____ Region
_____ Highway Section
_____ SR Number
_____ Structure Name

Washington State Department of Transportation

Request for Preliminary Bridge Geotechnical Information

Requested By:	Date:
Geotechnical Information Provided By:	
Project Name:	
Project Location:	
End Pier Stations:	Intermediate Pier Stations:
Permissible Embankment Slope:	Seismic Acceleration Coefficient:
End Pier(s) Recommendation:	
Approximate Dead Load:	Approximate Live Load:
Furnish information on anticipated foundation type, pile or shaft sizes, permanent vs. temporary casing, expected pile or shaft lengths, special excavation, underground water table elevation and the need for seals/cofferdams:	
Provide other Geotechnical information impacting bridge's preliminary cost estimate:	
Interior Pier(s) Recommendation (See information requested for end piers):	
Approximate Dead Load:	Approximate Live Load:
Liquefaction Issues. Indicate potential for liquefaction at the piers, anticipated depth of liquefaction, potential for lateral spread, and the need for soil remediation:	

DOT Form 230-045 EF
5/2010

Washington State Department of Transportation
Environmental And Engineering Service Center
Bridge and Structures Office

Not Included In Bridge Quantities List

SR	Job Number	Project Title	
Designed By	Checked By	Date	Supervisor
Type of Structure			

The following is a list of items for which the Bridge and Structures Office is relying on the Region to furnish plans, specifications and estimates.

1.
2.
3.
4.
5.
6.
7.
8.
9.
10.
11.
12.
13.
14.
15.
16.
17.

DOT Form 230-038 EF
Revised 2/97

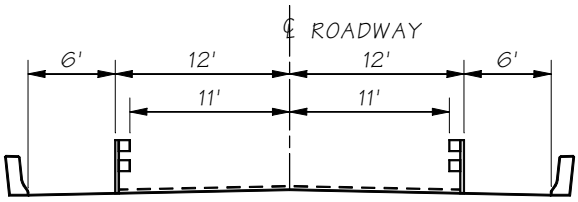

1. NO LANES OPEN: RELATIVE CAST FACTOR (RCF) = 1.0



2. TWO LANES OPEN WITH NEW ALIGNMENT: RFC = 1.0

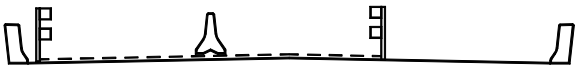

3. ONE LANE OPEN WITH NEW ALIGNMENT AND STAGE CONSTRUCTION: RCF = 1.2



4. ONE LANE OPEN WITH STAGE CONSTRUCTION: RCF = 1.2

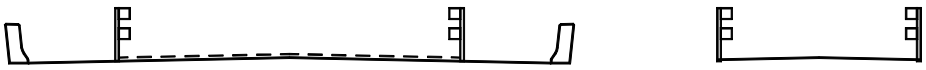

5. ONE LANE OPEN WITH DETOUR: RCF = 1.3

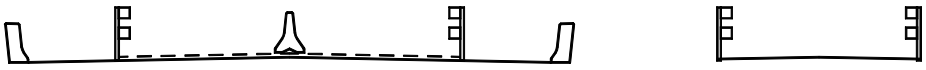

6. TWO LANES OPEN WITH DETOUR AND STAGE CONSTRUCTION: RCF = 1.5

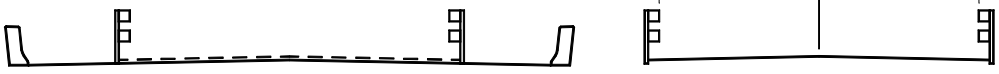

7. TWO LANES OPEN WITH DETOUR: RCF = 1.6

ASSUMPTIONS:
NEW BRIDGE, TWO SPAN PRESTRESSED GIRDER, 200 FEET LONG.
DETOUR BRIDGE, TWO SPAN STEEL GIRDER WITH TIMBER TRESTLES, 200 FEET LONG.
$50/FT² WITH 20% PREMIUM WHEN STAGING CONSTRUCTION.

THIS CHART IS INTENDED TO SHOW SOME OF THE MANY OPTIONS AVAILABLE FOR STAGING BRIDGE CONSTRUCTION. THE ACTUAL COST FACTORS FOR A SPECIFIC PROJECT ARE VERY SENSITIVE TO THE FACTORS OUTLINED IN SECTION 2.2.3. ANY COMPARISON MADE FOR A PROJECT SHOULD BE UNDER THE GUIDANCE OF THE PRELIMINARY DESIGN UNIT OF THE BRIDGE AND STRUCTURES OFFICE.

Washington State Department of Transportation
Environmental And Engineering Service Center
Bridge and Structures Office

Not Included In Bridge Quantities List

SR	Job Number	Project Title	
Designed By	Checked By	Date	Supervisor
Type of Structure			

The following is a list of items for which the Bridge and Structures Office is relying on the Region to furnish plans, specifications and estimates.

1.
2.
3.
4.
5.
6.
7.
8.
9.
10.
11.
12.
13.
14.
15.
16.
17.

DOT Form 230-038 EF
Revised 2/97

Not Included In Bridge Quantities List
Form 230-038

2.99 References

1. Federal Highway Administration (FHWA) publication *Federal Aid Highway Program Manual*.

   FHWA Order 5520.1 (dated December 24, 1990) contains the criteria pertaining to Type, Size, and Location studies.

   Volume 6, Chapter 6, Section 2, Subsection 1, Attachment 1 (Transmittal 425) contains the criteria pertaining to railroad undercrossings and overcrossings.
2. WAC480-60 *Railroad Companies - Clearances*
3. American Railway Engineering and Maintenance Association (AREMA) *Manual for Railroad Engineering*. Note: This manual is used as the basic design and geometric criteria by all railroads. Use these criteria unless superseded by FHWA or WSDOT criteria.
4. WSDOT *Design Manual* M 22-01.
5. WSDOT *Geotechnical Design Manual* M 46-03.
6. WSDOT *Hydraulics Manual* M 23-03.
7. WSDOT *Local Agency Guidelines* M 36-63.
8. American Association of State Highway and Transportation Officials AASHTO LRFD *Bridge Design Specification*.
9. The Union Pacific Railroad *"Guidelines for Design of Highway Separation Structures over Railroad (Overhead Grade Separation)"*
10. WSDOT *Context Sensitive Solutions Executive Order* E 1028
11. Newman, O. Defensible Space: Crime Prevention Through Urban Design. New York: Macmillan. 1972.
12. Jacobs, Jane. The Death and Life of Great American Cities. New York: Random House. 1961.

Chapter 3 Loads Contents

3.1 Scope 3-1

3.2 Definitions 3-2

3.3 Load Designations 3-3

3.4 Limit States 3-4

3.5 Load Factors and Load Combinations 3-5
3.5.1 Load Factors for Substructure 3-6

3.6 Loads and Load Factors for Construction 3-7

3.7 Load Factors for Post-tensioning 3-8
3.7.1 Post-tensioning Effects from Superstructure 3-8
3.7.2 Secondary Forces from Post-tensioning, PS 3-8

3.8 Permanent Loads 3-9
3.8.1 Deck Overlay Requirement 3-9

3.9 Live Loads 3-10
3.9.1 Design Live Load 3-10
3.9.2 Loading for Live Load Deflection Evaluation 3-10
3.9.3 Distribution to Superstructure 3-10
3.9.4 Bridge Load Rating 3-13

3.10 Pedestrian Loads 3-14

3.11 Wind Loads 3-15
3.11.1 Wind Load to Superstructure 3-15
3.11.2 Wind Load to Substructure 3-15
3.11.3 Wind on Noise Walls 3-15

3.12 Loads on Culverts 3-16

3.13 Earthquake Effects 3-17

3.14 Earth Pressure 3-18

3.15 Force Effects Due to Superimposed Deformations 3-19

3.16 Other Loads 3-20
3.16.1 Buoyancy 3-20
3.16.2 Collision Force on Bridge Substructure 3-20
3.16.3 Collision Force on Traffic Barrier 3-20
3.16.4 Force from Stream Current, Floating Ice, and Drift 3-20
3.16.5 Ice Load 3-20
3.16.6 Uniform Temperature Load 3-20

3.99 References 3-21

Chapter 3 Loads

3.1 Scope

AASHTO *Load and Resistance Factor Design (LRFD) Specifications* shall be the minimum design criteria used for all bridges except as modified herein.

3.2 Definitions

The definitions in this section supplement those given in LRFD Section 3.

Permanent Loads – Loads and forces that are, or are assumed to be, either constant upon completion of construction or varying only over a long time interval.

Transient Loads – Loads and forces that can vary over a short time interval relative to the lifetime of the structure.

3.3 Load Designations

Load designations follow LRFD Article 3.3.2.

3.4 Limit States

The basic limit state equation given by LRFD 1.3.2.1 is as:

$$\Sigma\eta_i\gamma_i Q_i \leq \phi R_n = R_r \quad (3.4\text{-}1)$$

Where:

η_i = load modifier
γ_i = load factor
Q_i = force effect
ϕ = resistance factor
R_n = nominal resistance
R_r = factored resistance

The modifier, η_i is the product of factors for ductility, redundancy, and importance. For simplicity use a value of 1.0 for η_i except for the design of columns when a minimum value of γ_i is appropriate. In such a case, use $\eta_i = 0.95$. Compression members in seismic designs are proportioned and detailed to ensure the development of significant and visible inelastic deformations at the extreme event limit states before failure.

Strength IV load combination shall not be used for foundation design.

The load factor for live load in the Service III load combination shall be as specified in Section 3.5.

3.5 Load Factors and Load Combinations

The limit states load combinations, and load factors (γ_i) used for structural design are in accordance with the AASHTO LRFD Table 3.4.1-1. For foundation design, loads are factored after distribution through structural analysis or modeling.

The design live load factor for the Service III Limit State load combination shall be as follows:

γ_{LL} = 0.8 when the requirements of Sections 5.6.1 and 5.6.2 are satisfied and stress analysis is based on gross section properties.

γ_{LL} = 1.0 when the requirements of Sections 5.6.1 and 5.6.2 are satisfied and stress analysis is based on transformed section properties.

In special cases that deviate from the requirements of Sections 5.6.1 and 5.6.2 and have been approved by the WSDOT Bridge Design Engineer, γ_{LL}, shall be as specified in the AASHTO LRFD.

The Service III live load factor for load rating shall be 1.0.

The live load factor for Extreme Event-I Limit State load combination, γ_{EQ} as specified in the AASHTO LRFD Table 3.4.1-1 for all WSDOT bridges shall be taken equal to 0.50. The γ_{EQ} factor applies to the live load force effect obtained from the bridge live load analysis. Associated mass of live load need not be included in the dynamic analysis.

The AASHTO LRFD allow the live load factor in Extreme Event-I load combination, γ_{EQ}, be determined on a project specific basis. The commentary indicates that the possibility of partial live load, i.e., $\gamma_{EQ} < 1.0$, with earthquakes should be considered. The application of Turkstra's rule for combining uncorrelated loads indicates that γ_{EQ} = 0.50 is reasonable for a wide range of values of average daily truck traffic (ADTT). The NCHRP Report 489 recommends live load factor for Extreme Event-I Limit State, γ_{EQ} equal to 0.25 for all bridges. This factor shall be increased to γ_{EQ} equal to 0.50 for bridges located in main state routes and congested roads.

Since the determination of live load factor, γ_{EQ} based on ADTT or based on bridges located in congested roads could be confusing and questionable, it is decided that live load factor of γ_{EQ} equal to 0.50 to be used for all WSDOT bridges regardless the bridge location or congestion.

The base construction temperature may be taken as 64°F for the determination of Temperature Load.

The load factors γ_{TG} and γ_{SE} are to be determined on a project specific basis in accordance with Articles 3.4.1 and 3.12 of the AASHTO LRFD. Load Factors for Permanent Loads, γ_p are provided in AASHTO LRFD Table 3.4.1-2.

The load factor for down drag loads shall be as specified in the AASHTO LRFD Table 3.4.1-2. The Geotechnical Report will provide the down drag force (*DD*). The down drag force (*DD*) is a load applied to the pile/shaft with the load factor specified in the Geotechnical Report. Generally, live loads (*LL*) are less than the down drag force and should be omitted when considering down drag forces.

The Load Factors for Superimposed Deformations are provided in Table 3.5-3 below.

	PS	CR, SH
Superstructure	1.0	1.0
Substructures that are fixed at the base and have a longitudinal connection with the superstructure (such as a hinged or integral connection) and analyzed using the gross moment of inertial (I_g)	0.5	0.5
All other substructure supporting Superstructure analyzed using either gross moment of inertia (I_g) or the effective cracked moment of inertia ($I_{effective}$)	1.0	1.0

Load Factors for Superimposed Deformations
Table 3.5-3

3.5.1 Load Factors for Substructure

Table 3.5-4 below provides general guidelines for when to use the maximum or minimum shaft/pile/column permanent load factors for axial capacity, uplift, and lateral loading.

In general, substructure design should use unfactored loads to obtain force distribution in the structure, and then factor the resulting moment and shear for final structural design. All forces and load factors are as defined previously.

Axial Capacity	Uplift	Lateral Loading
DC_{max}, DW_{max}	DC_{min}, DW_{min}	DC_{max}, DW_{max}
DC_{max}, DW_{max} for causing shear	DC_{max}, DW_{max} for causing shear	DC_{max}, DW_{max} causing shear
DC_{min}, DW_{min} for resisting shear	DC_{min}, DW_{min} for resisting shear	DC_{min}, DW_{min} resisting shear
DC_{max}, DW_{max} for causing moments	DC_{max}, DW_{max} for causing moments	DC_{max}, DW_{max} for causing moments
DC_{min}, DW_{min} for resisting moments	DC_{min}, DW_{min} for resisting moments	DC_{min}, DW_{min} for resisting moments
EV_{max}	EV_{min}	EV_{max}
DD = varies	DD = varies	DD = varies
EH_{max}	EH_{max} if causes uplift	EH_{max}

Minimum/Maximum Substructure Load Factors for Strength Limit State
Table 3.5-4

In the table above, “causing moment” and “causing shear” are taken to be the moment and shear causing axial, uplift, and lateral loading respectively. “Resisting” is taking to mean those force effects that are diminishing axial capacity, uplift, and lateral loading.

3.6 Loads and Load Factors for Construction

Unless otherwise specified, the load factor for construction loads and for any associated dynamic effects shall not be less than 1.5 in Strength I. The load factor for wind in Strength III shall not be less than 1.25.

When investigating Strength Load Combinations I, III, and V during construction, load factors for the weight of the structure and appurtenances, *DC* and *DW*, shall not be taken to be less than 1.25.

Where evaluation of construction deflections are required by the contract documents, Load Combination Service I shall apply. Construction dead loads shall be considered as part of the permanent load and construction transient loads considered part of the live load. The associated permitted deflections shall be included in the contract documents.

For falsework and formwork design loads, see *Standard Specifications* Section 6-02.3(17)A. The base construction temperature shall be taken as 64°F for the determination of Temperature Load.

3.7 Load Factors for Post-tensioning

3.7.1 Post-tensioning Effects from Superstructure

When cast-in-place, post-tensioned superstructure is constructed monolithic with the piers, the substructure design should take into account frame moments and shears caused by elastic shortening and creep of the superstructure upon application of the axial post-tensioning force at the bridge ends. Frame moments and shears thus obtained should be added algebraically to the values obtained from the primary and secondary moment diagrams applied to the superstructure.

When cast-in-place, post-tensioned superstructure are supported on sliding bearings at some of the piers, the design of those piers should include the longitudinal force from friction on the bearings generated as the superstructure shortens during jacking. When post-tensioning is complete, the full permanent reaction from this effect should be included in the governing AASHTO load combinations for the pier under design.

3.7.2 Secondary Forces from Post-tensioning, PS

The application of post-tensioning forces on a continuous structure produces reactions at the structure's support and internal forces that are collectively called secondary forces.

Secondary prestressing forces (i.e. secondary moments) are the force effects in continuous members, as a result of continuous post-tensioning. In frame analysis software, the secondary moments are generally obtained by subtracting the primary moment (P*e) from the total PS moment obtained by applying an equivalent static load which represents the forces due to post-tensioning. A load factor, γPS, of 1.0 is appropriate for the superstructure. For fixed columns a 50 percent reduction in PS force effects could be used given the elasto-plastic characteristics of the soil surrounding the foundation elements.

3.8 Permanent Loads

The design unit weights of common permanent loads are provided in Table 3.8-1.

Item	Load
Precast Pre-tensioned or Post-tensioned Spliced Girders	165 lb/ft^3
All Other Normal-Weight Reinforced Concrete	155 lb/ft^3
Unreinforced Concrete	145 lb/ft^3
Concrete Overlay	150 lb/ ft^3
Stay-in-Place Form for Box Girder (applied to slab area less overhangs and webs)	5 lb/ft^2
Traffic Barrier (32″ – F Shape) (Normal weight concrete)	460 lb/ft
Traffic Barrier (42″ – F Shape) (Normal weight concrete)	710 lb/ft
Traffic Barrier (34″ – Single Slope) (Normal weight concrete)	490 lb/ft
Traffic Barrier (42″ – Single Slope) (Normal weight concrete)	670 lb/ft
Wearing Surface – Hot Mix Asphalt (HMA)/Asphalt Concrete Pavement (ACP)	140 lb/ft^3
Soil, Compact	125 lb/ft^3
Prestressed Concrete	165 lb/ft^3
Light Weight Aggregate Concrete	125 lb/ft^3

Permanent Loads
Table 3.8-1

For lightweight concrete barrier, multiply the normal weight concrete barrier weight from Table 3.8-1 by (125/155).

3.8.1 Deck Overlay Requirement

Vehicular traffic will generate wear and rutting on a concrete bridge deck over the life of a bridge. One option to correct excessive wear is to add a Hot Mix Asphalt (HMA) overlay on top of the existing concrete deck. This type of overlay requires less construction time and is less expensive compared to removing a portion of the deck and adding a modified concrete overlay. The initial bridge design needs to incorporate the future overlay dead load.

Concrete bridge deck protection systems shall be in accordance with Section 5.7.4 for new bridge construction and widening projects. To accommodate a future deck overlay, bridges shall be designed as shown Table 3.8-2 below.

3.9 Live Loads

3.9.1 Design Live Load

Live load design criteria are specified in the lower right corner of the bridge preliminary plan sheet. The Bridge Preliminary Plan Engineer determines the criteria using the following guideline:

- New bridges and Bridge widening with addition of substructure – HL-93
- Bridge superstructure widening with no addition of substructure – Live load criteria of the original design
- Detour and other temporary bridges – 75 percent of HL-93

The application of design vehicular live loads shall be as specified in AASHTO LRFD 3.6.1.3. The design tandem, or "low boy", defined in LRFD C3.6.1.1 shall be included in the design vehicular live load.

The effect of one design tandem combined with the effect of the design lane load specified in LRFD Article 3.6.1.2.4 and, for negative moment between the points of contraflexure under a uniform load on all spans and reactions at interior supports, shall be investigated a dual design tandem spaced from 26.0 feet to 40.0 feet apart, measured between the trailing axle of the lead vehicle and the lead axle of the trailing vehicle, combined with the design lane load. For the purpose of this article, the pairs of the design tandem shall be placed in adjacent spans in such position to produce maximum force effect. Axles of the design tandem that do not contribute to the extreme force effect under consideration shall be neglected..

3.9.2 Loading for Live Load Deflection Evaluation

The loading for live load deflection criteria is defined in LRFD Article 3.6.1.3.2. Live load deflections for the Service I limit state shall satisfy the requirements of LRFD Section 2.5.2.6.2.

3.9.3 Distribution to Superstructure

A. Multi Girder Superstructure

The live load distribution factor for exterior girder of multi girder bridges shall be as follows:

- For exterior girder design with slab cantilever length equal or less than 40 percent of the adjacent interior girder spacing, use the live load distribution factor for interior girder. The slab cantilever length is defined as the distance from the centerline of the exterior girder to the edge of the slab.
- For exterior girder design with slab cantilever length exceeding 40 percent of the adjacent interior girder spacing, use the lever rule with the multiple presence factor of 1.0 for single lane to determine the live load distribution. The live load used to design the exterior girder shall not be less than the live load used for the adjacent interior girder.
- The special analysis based on the conventional approximation of loads on piles as described in LRFD Article C4.6.2.2.2d shall not be used unless the effectiveness of diaphragms on the lateral distribution of truck load is investigated.

B. Concrete Box Girders

The load distribution factor for multi-cell cast in place concrete box girders shall be per AASAHTO LRFD for interior girders from Table 4.6.2.2.2b-1 for bending moment, and Table 4.6.2.2.3a-1 for shear. The live load distribution factor for interior girders shall then be multiplied by the number of webs to obtain the design live load for the entire superstructure. The live load distribution need not exceed the total number of design lanes. The correction factor for live load distribution for skewed support as specified in Tables 4.6.2.2.2e-1 for bending moment and 4.6.2.2.3c-1 for shear shall be considered.

$DF = N_b$ x Df_i Live load distribution factor for multi-cell box girder (3.9.4-1)

Where:

Df_i = Live load distribution factor for interior web

N_b = Number of webs

C. Multiple Presence Factors

A reduction factor will be applied in the substructure design for multiple loadings in accordance with AASHTO.

D. Distribution to Substructure

The number of traffic lanes to be used in the substructure design shall be determined by dividing the entire roadway slab width by 12. No fractional lanes shall be used. Roadway slab widths of less than 24 feet shall have a maximum of two design lanes.

E. Distribution to Crossbeam

The design and load rating live loading is distributed to the substructure by placing wheel line reactions in lane configurations that generate the maximum stress in the substructure. A wheel line reaction is one-half of the reaction of a single lane of live load. For integral and hinged continuity diaphragms, live loads are considered to act directly on the substructure without further distribution through the superstructure as illustrated in Figure 3.9-1. For girder configurations where there is a clear load path through the girders to the cross beam, such as at expansion piers with girders supported on individual bearings, live load reactions are applied through the bearings. Normally, substructure design will not consider live load torsion or lateral distribution. Sidesway effects shall be taken into account.

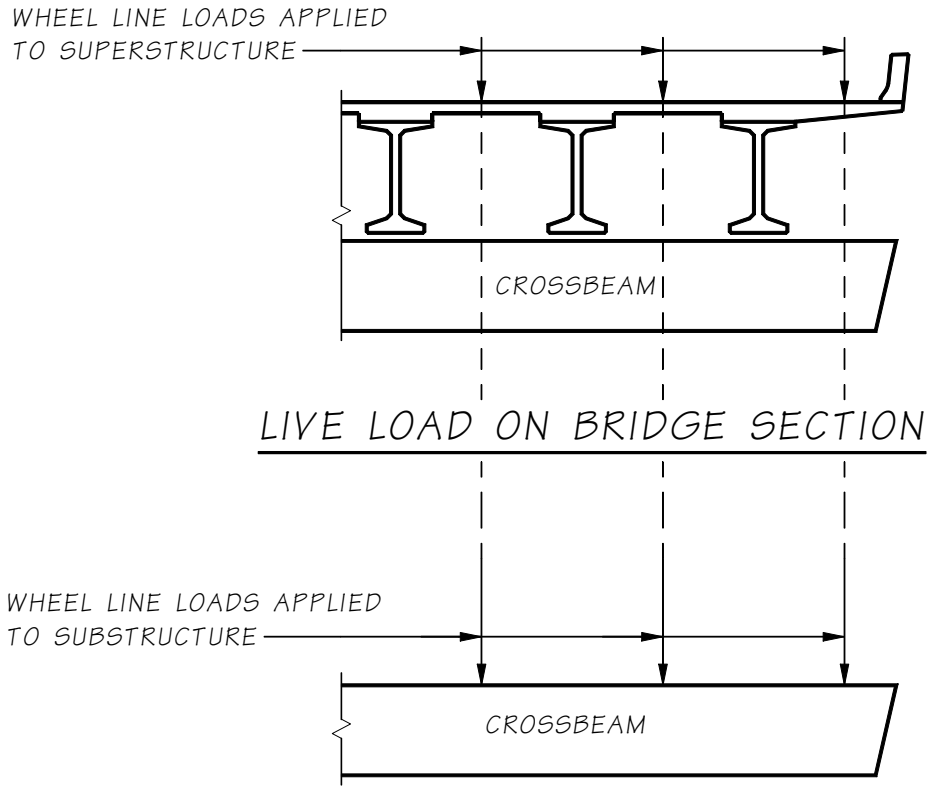

Live Load Distribution to Substructure
Figure 3.9-1

For steel and prestressed concrete superstructure where the live load is transferred to substructure through bearings, cross frames or diaphragms, the girder reaction may be used for substructure design. Live load placement is dependent on the member under design. Some examples of live load placement are as follows. The exterior vehicle wheel is placed 2 feet from the curb for maximum crossbeam cantilever moment or maximum eccentric foundation moment.

For crossbeam design between supports, the lanes are placed to obtain the maximum positive moment in the member; then re-located to obtain the maximum shear or negative moment in the member.

For column design, the design lanes are placed to obtain the maximum transverse moment at the top of the column; then re-located to obtain the maximum axial force of the column.

3.9.4 Bridge Load Rating

Bridge designers are responsible for Design, Legal, and Permit load rating of new bridges in accordance with the National Bridge Inspection Standards (NBIS) and the AASHTO *Manual Bridge Evaluation*. See Chapter 13 for detailed information on loading requirements for bridge load rating.

Superstructure Type	Concrete Cover	Overlay shown in the plan	Future Design Overlay
Deck Protection Systems 1 and 4: • Precast concrete, steel I or box girder with cast-in-place slab • Precast slabs with cast-in-place slab • Reinforced and post-tensioned box beams and slab bridges • Mainline Bridges on State Routes	2½″ (Including ½″ wearing surface)	None	2″ HMA
Deck Protection Systems 1 and 4: • Undercrossing bridge that carries traffic from a city street or county road • Bridges with raised sidewalks	2½″ (Including ½″ wearing surface)	None	None
Deck Protection System 2: • Concrete Overlays	Varies	Varies	None
Deck Protection System 3: • HMA Overlays	Varies	Varies	None
Deck Protection System 5: • Segmental bridges • Bridge Decks with longitudinal or transverse post-tensioning	1¾″ (Including ¼″ wearing surface)	1½″ Modified Concrete Overlay	None

Bridge Overlay Requirements
Table 3.8-2

The effect of the future deck overlay on girders camber, “A” dimension, creep, and profile grade need not be considered in superstructure design.

Deck overlay may be required at the time of original construction for some bridge widening or staged construction projects if ride quality is a major concern.

3.10 Pedestrian Loads

Pedestrian bridges shall be designed in accordance with the requirements of the AASHTO *LFRD Guide Specifications for the Design of Pedestrian Bridges*, dated December 2009.

Seismic design of pedestrian bridges shall be performed in accordance with the requirements of the AASHTO SEISMIC.

Pedestrian live load on vehicular bridge shall be as specified in LRFD 3.6.1.6.

3.11 Wind Loads

3.11.1 Wind Load to Superstructure

For the usual girder and slab bridges having individual span length of not more than 150 ft and a maximum height of 33 feet above low ground or water level, the following simplified wind pressure on structure (*WS*), could be used in lieu of the general method described in AASHTO LRFD Article 3.8.1.2:

Limit State	Wind Exposure Category					
	B		C		D	
	Transverse	Longitudinal	Transverse	Longitudinal	Transverse	Longitudinal
Strength III	0.029	0.007	0.040	0.010	0.046	0.012
Strength V	0.021	0.005	0.021	0.005	0.021	0.005
Service I	0.016	0.004	0.016	0.004	0.016	0.004
Service IV	0.016	0.004	0.023	0.006	0.026	0.007

Wind Pressure (kip per square foot)

Table 3.11.1-1

Both forces shall be applied simultaneously.

For the usual girder and slab bridges having individual span length of not more than 150 feet and a maximum height of 33 feet above low ground or water level, the following simplified wind pressure on vehicle (*WL*), could be used in lieu of the general method described in AASHTO LRFD Article 3.8.1.3:

- 0.10 kip per linear foot, transverse
- 0.04 kip per linear foot, longitudinal

Both forces shall be applied simultaneously.

3.11.2 Wind Load to Substructure

Wind forces shall be applied to the substructure units in accordance with the loadings specified in AASHTO. Transverse stiffness of the superstructure may be considered, as necessary, to properly distribute loads to the substructure provided that the superstructure is capable of sustaining such loads. Vertical wind pressure, per AASHTO LRFD Section 3.8.2, shall be included in the design where appropriate, for example, on single column piers. Wind loads shall be applied through shear keys or other positive means from the superstructure to the substructure. Wind loads shall be distributed to the piers and abutments in accordance with the laws of statics. Transverse wind loads can be applied directly to the piers assuming the superstructure to act as a rigid beam. For large structures a more appropriate result might be obtained by considering the superstructure to act as a flexible beam on elastic supports.

3.11.3 Wind on Noise Walls

Wind on Noise Walls shall be as specified in LRFD 3.8.1, 3.8.1.2.4, and 15.8.2.

3.12 Loads on Culverts

Loads and live load distributions on culverts shall be in accordance with the requirements of the AASHTO LRFD. Seismic loading shall be analyzed according to FHWA-NHI-10-034 "*Technical Manual for Design and Construction of Roadway Tunnels – Civil Elements*".

3.13 Earthquake Effects

Earthquake loads see Chapter 4.

3.14 Earth Pressure

Earth Pressure loads see Chapter 7.

3.15 Force Effects Due to Superimposed Deformations

PS, CR, SH, TU and TG are superimposed deformations. Load factors for *PS*, *CR*, and *SH*, are as shown in Table 3.5-3. In non-segmental structures: *PS*, *CR,* and *SH* are symbolically factored by a value of 1.0 in the strength limit state, but are actually designed for in the service limit state. For substructure in the strength limit state, the value of 0.50 for γ_{PS}, γ_{CR}, γ_{SH}, and γ_{TU} may be used when calculating force effects in non-segmental structures, but shall be taken in conjunction with the gross moment of inertia in the columns or piers. The larger of the values provided for load factor of *TU* shall be used for deformations and the smaller values for all other effects. The calculation of displacements for *TU* loads utilizes a factor greater than 1.0 to avoid under sizing joints, expansion devices, and bearings.

The current AASHTO LRFD require a load factor of 1.2 on *CR*, *SH*, and *TU* deformations, and 0.5 on other *CR/SH/TU* force effects. The lower value had been rationalized as dissipation of these force effects over time, particularly in the columns and piers.

Changing the load factors for creep and shrinkage is not straight-forward because *CR*, *SH* are "superimposed deformations", that is, force effects due to a change in material behavior that cause a change in the statical system. For safety and simplicity in design, they are treated as loads--despite not being measurable at time $t = 0$. However, behavior is nonlinear and application of the load factor must also be considered. Some software will run service load analysis twice: once with and once without *CR*, *SH* effects. The *CR* and *SH* can then be isolated by subtracting the results of the two runs. Other software will couple the *CR* and *SH* with the dead load, giving a shrinkage- or creep-adjusted dead load.

The proposed compromise is to assign creep and shrinkage the same load factor as the *DC* loads, but permit a factor of 1.0 if the project-specific creep coefficient can be determined and is then used in the linear analysis software.

Thermal and shrinkage loadings are induced by movements of the structure and can result from several sources. Movements due to temperature changes are calculated using coefficients of thermal expansion of 0.000006 feet/foot per degree for concrete and 0.0000065 feet/foot per degree for steel. Reinforced concrete shrinks at the rate of 0.0002 feet/foot.

3.16 Other Loads

3.16.1 Buoyancy

The effects of submergence of a portion of the substructure is to be calculated, both for designing piling for uplift and for realizing economy in footing design.

3.16.2 Collision Force on Bridge Substructure

See AASHTO LRFD Articles 3.6.5 and 3.14

3.16.3 Collision Force on Traffic Barrier

See AASHTO LRFD Article 3.6.5.1

3.16.4 Force from Stream Current, Floating Ice, and Drift

See AASHTO LRFD Article 3.9

3.16.5 Ice Load

In accordance with WSDOT HQ Hydraulics Office criteria, an ice thickness of 12″ shall be used for stream flow forces on piers throughout Washington State.

3.16.6 Uniform Temperature Load

The design thermal movement associated with a uniform temperature change may be calculated using the ranges of temperature as specified herein. The temperature ranges shown below reflect the difference between the extended lower and upper boundary to be used to calculate thermal deformation effects.

- Concrete Bridges (All Regions): 0° to 100°
- Steel Bridges (Eastern Washington): −30° to 120°
- Steel Bridges (Western Washington): 0° to 120°

3.99 References

1. AASHTO *LRFD Bridge Design Specifications for Design of Highway Bridges*, 7th Edition.

Chapter 4 Seismic Design and Retrofit Contents

4.1 General 4-1

4.2 WSDOT Additions and Modifications to AASHTO *Guide Specifications for LRFD Seismic Bridge Design* (SEISMIC) 4-2
4.2.1 Definitions 4-2
4.2.2 Earthquake Resisting Systems (ERS) Requirements for Seismic Design Catagories (SDCs) C and D 4-2
4.2.3 Seismic Ground Shaking Hazard 4-7
4.2.4 Selection of Seismic Design Category (SDC) 4-9
4.2.5 Temporary and Staged Construction 4-9
4.2.6 Load and Resistance Factors 4-9
4.2.7 Balanced Stiffness Requirements and Balanced Frame Geometry Recommendation. 4-10
4.2.8 Selection of Analysis Procedure to Determine Seismic Demand 4-10
4.2.9 Member Ductility Requirement for SDCs C and D 4-10
4.2.10 Longitudinal Restrainers 4-10
4.2.11 Abutments 4-10
4.2.12 Foundation – General 4-15
4.2.13 Foundation – Spread Footing 4-15
4.2.14 Procedure 3: Nonlinear Time History Method 4-15
4.2.15 I_{eff} for Box Girder Superstructure 4-15
4.2.16 Foundation Rocking 4-15
4.2.17 Drilled Shafts 4-16
4.2.18 Longitudinal Direction Requirements 4-16
4.2.19 Liquefaction Design Requirements. 4-16
4.2.20 Reinforcing Steel 4-16
4.2.21 Concrete Modeling 4-17
4.2.22 Expected Nominal Moment Capacity 4-17
4.2.23 Interlocking Bar Size 4-17
4.2.24 Splicing of Longitudinal Reinforcement in Columns Subject to Ductility Demands for SDCs C and D. 4-17
4.2.25 Development Length for Column Bars Extended into Oversized Pile Shafts f or SDCs C and D 4-17
4.2.26 Lateral Confinement for Oversized Pile Shaft for SDCs C and D 4-18
4.2.27 Lateral Confinement for Non-Oversized Strengthened Pile Shaft for SDCs C and D 4-18
4.2.28 Requirements for Capacity Protected Members 4-18
4.2.29 Superstructure Capacity Design for Transverse Direction (Integral Bent Cap) for SDCs C and D 4-18
4.2.30 Superstructure Design for Non Integral Bent Caps for SDCs B, C, and D 4-19
4.2.31 Joint Proportioning 4-19
4.2.32 Cast-in-Place and Precast Concrete Piles 4-19

4.3 Seismic Design Requirements for Bridge Modifications and Widening Projects 4-20
4.3.1 General 4-20
4.3.2 Bridge Widening Project Classification. 4-20
4.3.3 Seismic Design Guidance:. 4-21
4.3.4 Scoping for Bridge Widening and Liquefaction Mitigation 4-24
4.3.5 Design and Detailing Considerations 4-24

4.4 Seismic Retrofitting of Existing Bridges 4-26
4.4.1 Seismic Analysis Requirements 4-26
4.4.2 Seismic Retrofit Design 4-26
4.4.3 Computer Analysis Verification 4-27
4.4.4 Earthquake Restrainers 4-27
4.4.5 Isolation Bearings 4-27

4.5 Seismic Design Requirements for Retaining Walls 4-28
4.5.1 General 4-28

4.6 Appendices 4-29
Appendix 4-B1 Design Examples of Seismic Retrofits 4-30
Appendix 4-B2 SAP2000 Seismic Analysis Example 4-35

4.99 References 4-118

Chapter 4 Seismic Design and Retrofit

4.1 General

Seismic design of new bridges and bridge widenings shall conform to AASHTO *Guide Specifications for LRFD Seismic Bridge Design* (SEISMIC) as modified by Sections 4.2 and 4.3. Analysis and design of seismic retrofits for existing bridges shall be completed in accordance with Section 4.4. Seismic design of retaining walls shall be in accordance with Section 4.5. For nonconventional bridges, bridges that are deemed critical or essential, or bridges that fall outside the scope of the Guide Specifications for any other reasons, project specific design requirements shall be developed and submitted to the WSDOT Bridge Design Engineer for approval.

The importance classifications for all highway bridges in Washington State are classified as "Normal" except for special major bridges. Special major bridges fitting the classifications of either "Critical" or "Essential" will be so designated by either the WSDOT Bridge and Structures Engineer or the WSDOT Bridge Design Engineer.

The performance objective for "normal" bridges is life safety. Bridges designed in accordance with AASHTO Guide Specifications are intended to achieve the life safety performance goals.

4.2 WSDOT Additions and Modifications to AASHTO *Guide Specifications for LRFD Seismic Bridge Design* (SEISMIC)

WSDOT amendments to the AASHTO SEISMIC are as follows:

4.2.1 Definitions

Guide Specifications Article 2.1 – Add the following definitions:

- **Oversized Pile Shaft –** A drilled shaft foundation that is larger in diameter than the supported column and has a reinforcing cage larger than and independent of the columns. The size of the shaft shall be in accordance with Section 7.8.2.
- **Owner –** Person or agency having jurisdiction over the bridge. For WSDOT projects, regardless of delivery method, the term "Owner" in these Guide Specifications shall be the WSDOT Bridge Design Engineer or/and the WSDOT Geotechnical Engineer.

4.2.2 Earthquake Resisting Systems (ERS) Requirements for Seismic Design Catagories (SDCs) C and D

Guide Specifications Article 3.3 – WSDOT Global Seismic Design Strategies:

- **Type 1 –** Ductile Substructure with Essentially Elastic Superstructure. This category is permissible.
- **Type 2 –** Essentially Elastic Substructure with a Ductile Superstructure. This category is not permissible.
- **Type 3 –** Elastic Superstructure and Substructure with a Fusing Mechanism Between the Two. This category is permissible with WSDOT Bridge Design Engineer's approval.

With the approval of the Bridge Design Engineer, for Type 1 ERS for SDC C or D, if columns or pier walls are considered an integral part of the energy dissipating system but remain elastic at the demand displacement, the forces to use for capacity design of other components are to be a minimum of 1.2 times the elastic forces resulting

from the demand displacement in lieu of the forces obtained from overstrength plastic hinging analysis. Because maximum limiting inertial forces provided by yielding elements acting at a plastic mechanism level is not effective in the case of elastic design, the following constraints are imposed. These may be relaxed on a case by case basis with the approval of the Bridge Design Engineer.

1. Unless an analysis that considers redistribution of internal structure forces due to inelastic action is performed, all substructure units of the frame under consideration and of any adjacent frames that may transfer inertial forces to the frame in question must remain elastic at the design ground motion demand.
2. Effective member section properties must be consistent with the force levels expected within the bridge system. Reinforced concrete columns and pier walls should be analyzed using cracked section properties. For this purpose, in absence of better information or estimated by Figure 5.6.2-1, a moment of inertia equal to one half that of the un-cracked section shall be used.

3. Foundation modeling must be established such that uncertainties in modeling will not cause the internal forces of any elements under consideration to increase by more than 10 percent.
4. When site specific ground response analysis is performed, the response spectrum ordinates must be selected such that uncertainties will not cause the internal forces of any elements under consideration to increase by more than 10 percent.
5. Thermal, shrinkage, prestress or other forces that may be present in the structure at the time of an earthquake must be considered to act in a sense that is least favorable to the seismic load combination under investigation.
6. P-Delta effects must be assessed using the resistance of the frame in question at the deflection caused by the design ground motion.
7. Joint shear effects must be assessed with a minimum of the calculated elastic internal forces applied to the joint.
8. Detailing as normally required in either SDC C or D, as appropriate, must be provided.

It is permitted to use expected material strengths for the determination of member strengths for elastic response of members.

The use of elastic design in lieu of overstrength plastic hinging forces for capacity protection described above shall only be considered if designer demonstrates that capacity design of Article 4.11 of the AASHTO *Guide Specifications for LRFD Bridge Seismic Design* is not feasible due to geotechnical or structural reasons.

Type 3 ERS may be considered only if Type 1 strategy is not suitable and Type 3 strategy has been deemed necessary for accommodating seismic loads. Use of isolation bearings needs the approval of WSDOT Bridge Design Engineer. Isolation bearings shall be designed per the requirement specified in Section 9.3

If the columns or pier walls are designed for elastic forces, all other elements shall be designed for the lesser of the forces resulting from the overstrength plastic hinging moment capacity of columns or pier walls and the unreduced elastic seismic force in all SDCs. The minimum detailing according to the bridge seismic design category shall be provided. Shear design shall be based on 1.2 times elastic shear force and nominal material strengths shall be used for capacities. Limitations on the use of ERS and ERE are shown in Figures 3.3-1a, 3.3-1b, 3.3-2, and 3.3-3.

- Figure 3.3-1b Type 6, connection with moment reducing detail should only be used at column base if proved necessary for foundation design. Fixed connection at base of column remains the preferred option for WSDOT bridges.
- The design criteria for column base with moment reducing detail shall consider all applicable loads at service, strength, and extreme event limit states.
- Figure 3.3-2 Types 6 and 8 are not permissible for non-liquefied configuration and permissible with WSDOT Bridge Design Engineer's approval for liquefied configuration

For ERSs and EREs requiring approval, the WSDOT Bridge Design Engineer's approval is required regardless of contracting method (i.e., approval authority is not transferred to other entities).

1

Longitudinal Response

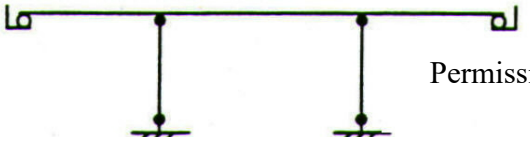

Permissible

- Plastic hinges in inspectable locations or elastic design of columns.
- Abutment resistance not required as part of ERS
- Knock-off backwalls permissible

2

Longitudinal Response

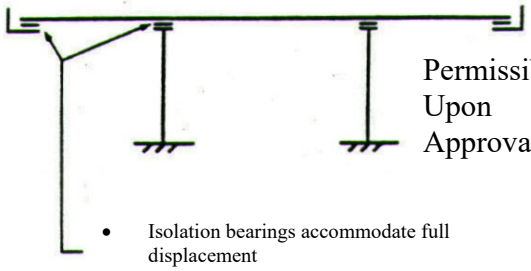

Permissible Upon Approval

- Isolation bearings accommodate full displacement
- Abutment not required as part of ERS

3

Transverse Response

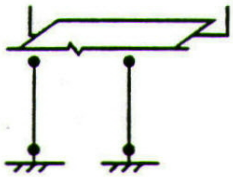

Permissible

- Plastic hinges in inspectable locations.
- Abutment not required in ERS, breakaway shear keys permissible with WSDOT Bridge Design Engineer's Approval

4

Transverse or Longitudinal Response



Permissible Upon Approval

- Plastic hinges in inspectable locations
- Isolation bearings with or without energy dissipaters to limit overall displacements

5

Transverse or Longitudinal Response



Permissible

- Abutment required to resist the design earthquake elastically
- Longitudinal passive soil pressure shall be less than 0.70 of the value obtained using the procedure given in BDM Article 4.2.11

6

Longitudinal Response

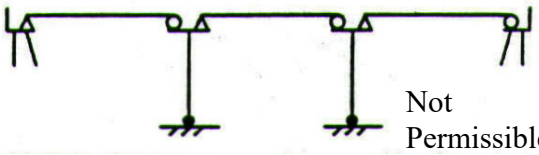

Not Permissible

- Multiple simply-supported spans with adequate support lengths
- Plastic hinges in inspectable locations or elastic design of columns

Figure 3.3-1a Permissible Earthquake-Resisting Systems (ERSs)
BDM Figure 4.2.2-1

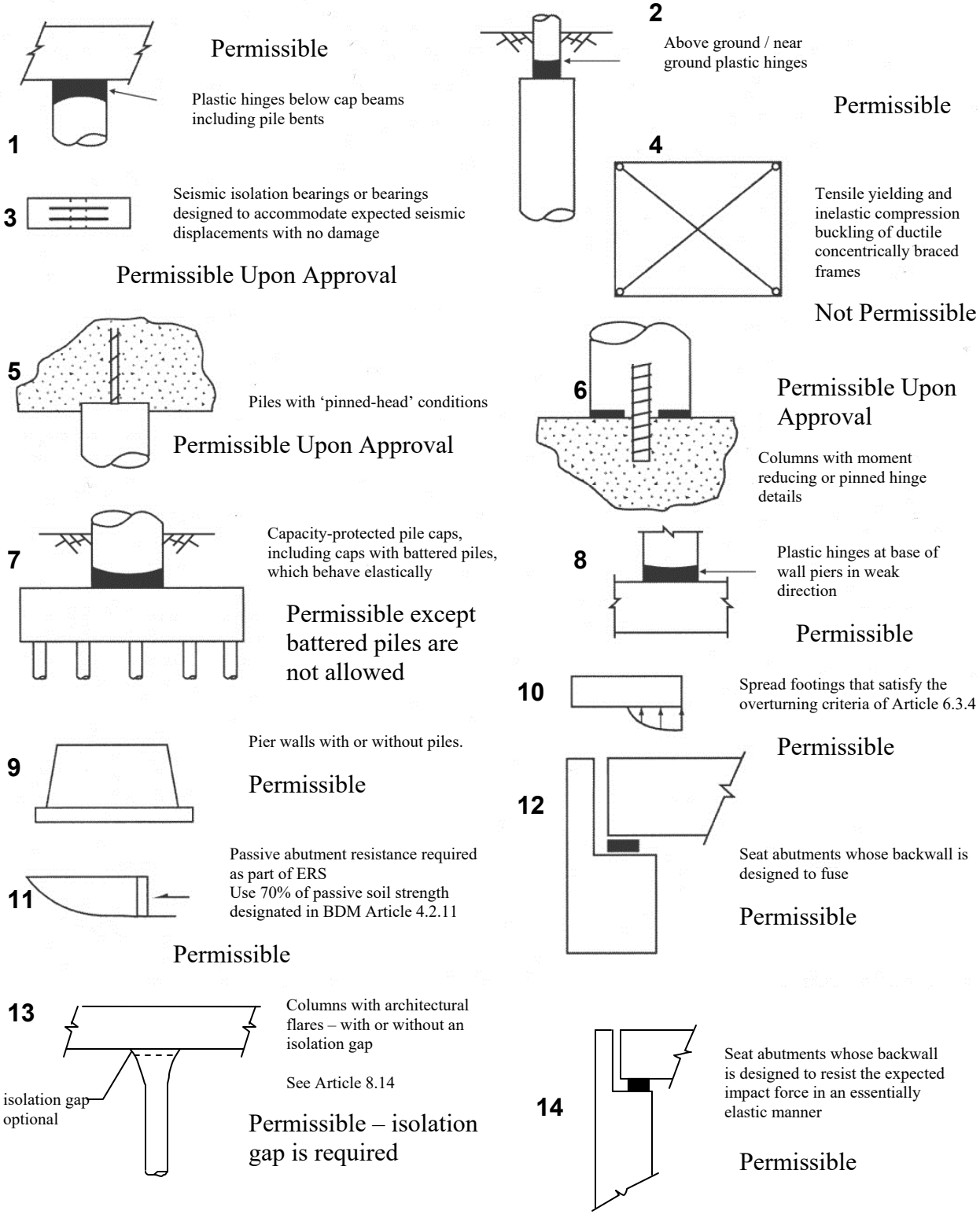

Figure 3.3-1b Permissible Earthquake-Resisting Elements (EREs)
BDM Figure 4.2.2-2

1



Passive abutment resistance required as part of ERS Passive Strength
Use 100% of strength designated in Article 5.2.3

Not Permissible

2

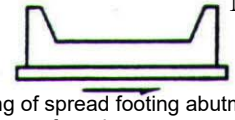

Not Permissible

Sliding of spread footing abutment allowed to limit force transferred

Limit movement to adjacent bent displacement capacity

3

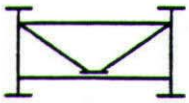

Ductile End-diaphragms in superstructure (Article 7.4.6)

Not Permissible

4

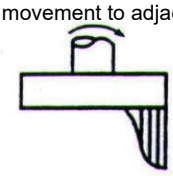

Not Permissible

Foundations permitted to rock

Use rocking criteria according to Appendix A

5

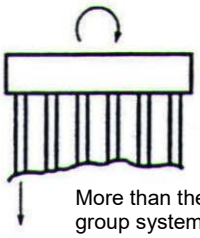

Not Permissible

More than the outer line of piles in group systems allowed to plunge or uplift under seismic loadings

6

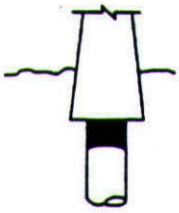

Wall piers on pile foundations that are not strong enough to force plastic hinging into the wall, and are not designed for the Design Earthquake elastic forces

Ensure Limited Ductility Response in Piles according to Article 4.7.1

Permissible Upon Approval for Liquefied Configuration

7

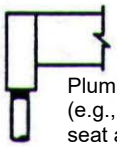

Not Permissible

Plumb piles that are not capacity-protected (e.g., integral abutment piles or pile-supported seat abutments that are not fused transversely)

Ensure Limited Ductility Response in Piles according to Article 4.7.1

8

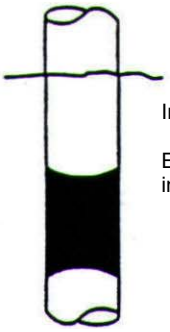

In-ground hinging in shafts or piles.

Ensure Limited Ductility Response in Piles according to Article 4.7.1

Permissible Upon Approval for Liquefied Configuration

9



Not Permissible

Batter pile systems in which the geotechnical capacities and/or in-ground hinging define the plastic mechanisms.

Ensure Limited Ductility Response in Piles according to Article 4.7.1

Figure 3.3-2 Permissible Earthquake-Resisting Elements That Require Owner's Approval
BDM Figure 4.2.2-3

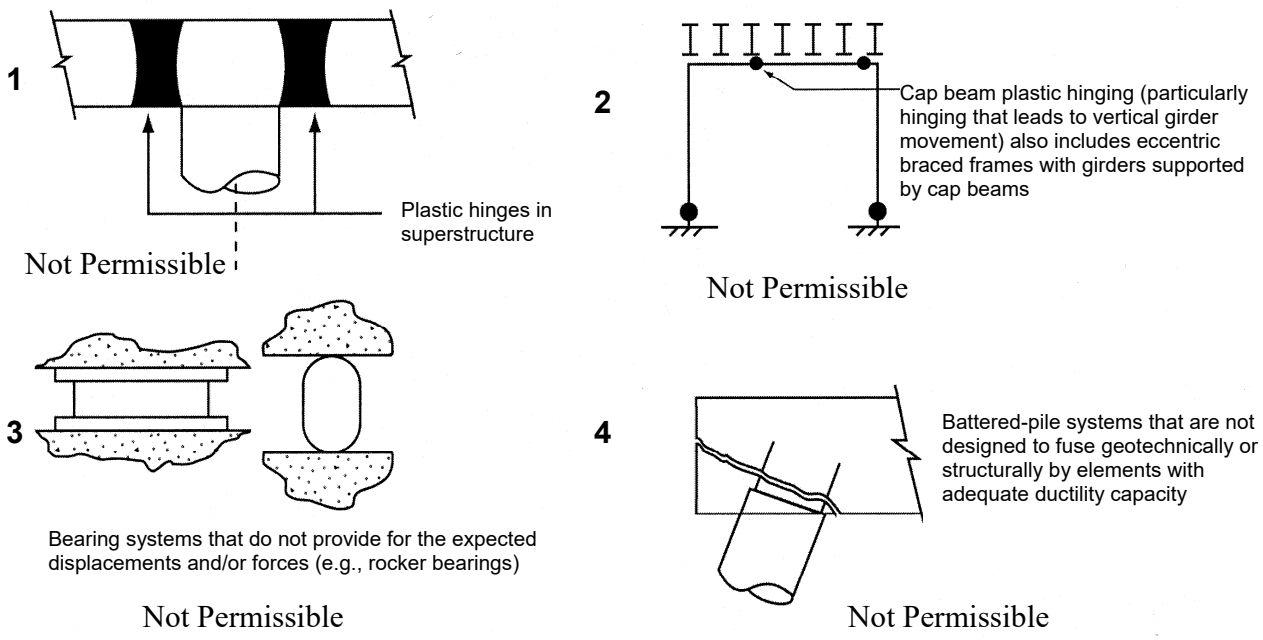

Figure 3.3-3 Earthquake-Resisting Elements that Are Not Recommended for New Bridges
BDM Figure 4.2.2-4

4.2.3 Seismic Ground Shaking Hazard

Guide Specifications Article 3.4 – For bridges that are considered critical or essential or normal bridges with a site Class F, the seismic ground shaking hazard shall be determined based on the WSDOT Geotechnical Engineer recommendations.

In cases where the site coefficients used to adjust mapped values of design ground motion for local conditions are inappropriate to determine the design spectra in accordance with general procedure of Article 3.4.1 (such as the period at the end of constant design spectral acceleration plateau (T_s) is greater than 1.0 second or the period at the beginning of constant design spectral acceleration plateau (T_o) is less than 0.2 second), a site-specific ground motion response analysis shall be performed.

In the general procedure, the spectral response parameters shall be determined using the USGS 2014 Seismic Hazard Maps with Seven Percent Probability of Exceedance in 75 yr (1000-yr Return Period).

Guide Specifications Article 3.4.2.3-Site Coefficients

The site coefficients for peak ground acceleration, F_{pga}, short-period range F_a, and for long-period range F_v shall be taken as specified in the following Tables:

Site Class	Mapped Peak Ground Acceleration Coefficient (PGA)					
	PGA ≤ 0.10	PGA = 0.2	PGA = 0.3	PGA = 0.4	PGA = 0.5	PGA ≥ 0.6
A	0.8	0.8	0.8	0.8	0.8	0.8
B	0.9	0.9	0.9	0.9	0.9	0.9
C	1.3	1.2	1.2	1.2	1.2	1.2
D	1.6	1.4	1.3	1.2	1.1	1.1
E	2.4	1.9	1.6	1.4	1.2	1.1
F	*	*	*	*	*	*

Values of Site Coefficient, F_{pga}, for Peak Ground Acceleration
Table 3.4.2.3-1A

Site Class	Mapped Spectral Acceleration Coefficient at Period 0.2 sec (S_s)					
	S_s ≤ 0.25	S_s = 0.50	S_s = 0.75	S_s = 1.00	S_s = 1.25	S_s ≥ 1.50
A	0.8	0.8	0.8	0.8	0.8	0.8
B	0.9	0.9	0.9	0.9	0.9	0.9
C	1.3	1.3	1.2	1.2	1.2	1.2
D	1.6	1.4	1.2	1.1	1.0	1.0
E	2.4	1.7	1.3	*	*	*
F	*	*	*	*	*	*

Values of Site Coefficient, F_a, for 0.2-sec Period Spectral Acceleration
Table 3.4.2.3-1B

Site Class	Mapped Spectral Acceleration Coefficient at Period 1.0 sec (S_1)					
	S_1 ≤ 0.1	S_1 = 0.2	S_1 = 0.3	S_1 = 0.4	S_1 = 0.5	S_1 ≥ 0.6
A	0.8	0.8	0.8	0.8	0.8	0.8
B	0.8	0.8	0.8	0.8	0.8	0.8
C	1.5	1.5	1.5	1.5	1.5	1.4
D	2.4	2.2	2.0	1.9	1.8	1.7
E	4.2	3.3	2.8	2.4	2.2	2.0
F	*	*	*	*	*	*

*Site-specific response geotechnical investigation and dynamic site response analysis should be considered.

Note: Use straight line interpolation for intermediate values of *PGA*, S_s, and S_1.

Values of Site Coefficient, F_v, for 1.0-sec Period Spectral Acceleration
Table 3.4.2.3.2

Ground Motion Tool

The ground motion software tool called **Spectra** developed by the Bridge and Structures Office allows the user to generate the design response spectrum using the USGS 2014 Seismic hazard maps and the updated Site Coefficients. **Spectra** is a tool in the BridgeLink BEToolbox application. Download BridgeLink from the WSDOT web site at www.wsdot.wa.gov/eesc/bridge/software.

After downloading and installing, start BridgeLink, select File > New and select the Spectra tool to begin a new response spectrum project.

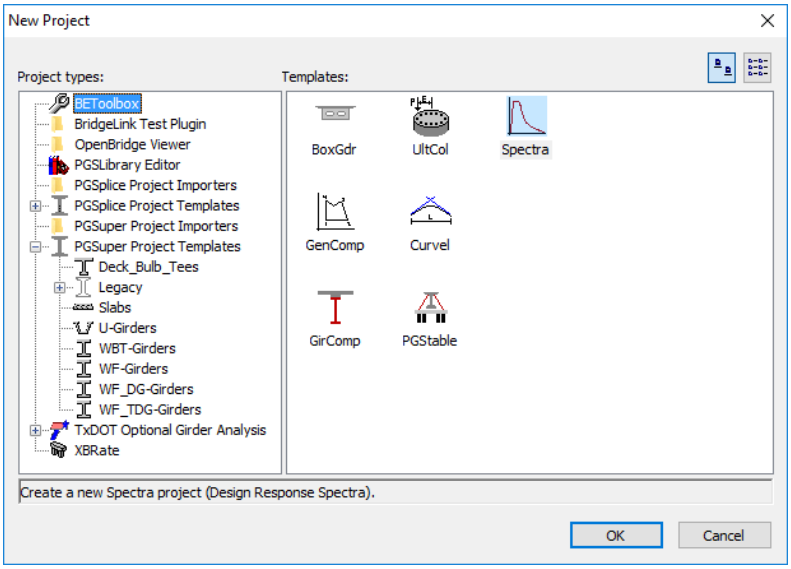

4.2.4 Selection of Seismic Design Category (SDC)

Guide Specifications Article 3.5 – Pushover analysis shall be used to determine displacement capacity for both SDCs C and D.

4.2.5 Temporary and Staged Construction

Guide Specifications Article 3.6 – For bridges that are designed for a reduced seismic demand, the contract plans shall either include a statement that clearly indicatesthat the bridge was designed as temporary using a reduced seismic demand or show the Acceleration Response Spectrum (ARS) used for design. No liquefaction assessment required for temporary bridges.

4.2.6 Load and Resistance Factors

Guide Specifications Article 3.7 – Revise as follows:

Use load factors of 1.0 for all permanent loads. The load factor for live load shall be 0.0 when pushover analysis is used to determine the displacement capacity. Use live load factor of 0.5 for all other extreme event cases. Unless otherwise noted, all ϕ factors shall be taken as 1.0.

4.2.7 Balanced Stiffness Requirements and Balanced Frame Geometry Recommendation

Guide Specifications Articles 4.1.2 and 4.1.3 – Balanced stiffness between bents within a frame and between columns within a bent and balanced frame geometry for adjacent frames are required for bridges in both SDCs C and D. Deviations from balanced stiffness and balanced frame geometry requirements require approval from the WSDOT Bridge Design Engineer.

4.2.8 Selection of Analysis Procedure to Determine Seismic Demand

Guide Specifications Article 4.2 – Analysis Procedures:

- Procedure 1 (Equivalent Static Analysis) shall not be used.
- Procedure 2 (Elastic Dynamic Analysis) shall be used for all "regular" bridges with two through six spans and "not regular" bridges with two or more spans in SDCs B, C, or D.
- Procedure 3 (Nonlinear Time History) shall only be used with WSDOT Bridge Design Engineer's approval.

4.2.9 Member Ductility Requirement for SDCs C and D

Guide Specifications Article 4.9 – In-ground hinging for drilled shaft and pile foundations may be considered for the liquefied configuration with WSDOT Bridge Design Engineer approval.

4.2.10 Longitudinal Restrainers

Guide Specifications Article 4.13.1 – Longitudinal restrainers shall be provided at the expansion joints between superstructure segments. Restrainers shall be designed in accordance with the FHWA Seismic Retrofitting Manual for Highway Structure (FHWA-HRT-06-032) Article 8.4 The Iterative Method. See the earthquake restrainer design example in the Appendix of this chapter. Restrainers shall be detailed in accordance with the requirements of Guide Specifications Article 4.13.3 and Section 4.4.5. Restrainers may be omitted for SDCs C and D where the available seat width exceeds the calculated support length specified in Equation C4.13.1-1.

Omitting restrainers for liquefiable sites shall be approved by the WSDOT Bridge Design Engineer.

Longitudinal restrainers shall not be used at the end piers (abutments).

4.2.11 Abutments

Guide Specifications Article 5.2 – Diaphragm Abutment type shown in Figure 5.2.3.2-1 shall not be used for WSDOT bridges.

Guide Specifications Article 5.2 – Abutments to be revised as follows:

5.2.1 - General

The participation of abutment walls in providing resistance to seismically induced inertial loads may be considered in the seismic design of bridges either to reduce column sizes or reduce the ductility demand on the columns. Damage to backwalls and wingwalls during earthquakes may be considered acceptable when considering no

collapse criteria, provided that unseating or other damage to the superstructure does not occur. Abutment participation in the overall dynamic response of the bridge system shall reflect the structural configuration, the load transfer mechanism from the bridge to the abutment system, the effective stiffness and force capacity of the wall-soil system, and the level of acceptable abutment damage. The capacity of the abutments to resist the bridge inertial loads shall be compatible with the soil resistance that can be reliably mobilized, the structural design of the abutment wall, and whether the wall is permitted to be damaged by the design earthquake. The lateral load capacity of walls shall be evaluated on the basis of a rational passive earth-pressure theory.

The participation of the bridge approach slab in the overall dynamic response of bridge systems to earthquake loading and in providing resistance to seismically induced inertial loads may be considered permissible upon approval from both the WSDOT Bridge Design Engineer and the WSDOT Geotechnical Engineer.

The participation of the abutment in the ERS should be carefully evaluated with the Geotechnical Engineer and the Owner when the presence of the abutment backfill may be uncertain, as in the case of slumping or settlement due to liquefaction below or near the abutment.

5.2.2 - Longitudinal Direction

Under earthquake loading, the earth pressure action on abutment walls changes from a static condition to one of two possible conditions:

- The dynamic active pressure condition as the wall moves away from the backfill, or
- The passive pressure condition as the inertial load of the bridge pushes the wall into the backfill.

The governing earth pressure condition depends on the magnitude of seismically induced movement of the abutment walls, the bridge superstructure, and the bridge/abutment configuration.

For semi-integral (Figure 5.2.2-a), L-shape abutment with backwall fuse

(Figure 5.2.2-b), or without backwall fuse (Figure 5.2.2-c), for which the expansion joint is sufficiently large to accommodate both the cyclic movement between the abutment wall and the bridge superstructure (i.e., superstructure does not push against abutment wall), the seismically induced earth pressure on the abutment wall shall be considered to be the dynamic active pressure condition. However, when the gap at the expansion joint is not sufficient to accommodate the cyclic wall/bridge seismic movements, a transfer of forces will occur from the superstructure to the abutment wall. As a result, the active earth pressure condition will not be valid and the earth pressure approaches a much larger passive pressure load condition behind the backwall. This larger load condition is the main cause for abutment damage, as demonstrated in past earthquakes. For semi-integral or L-shape abutments, the abutment stiffness and capacity under passive pressure loading are primary design concerns.

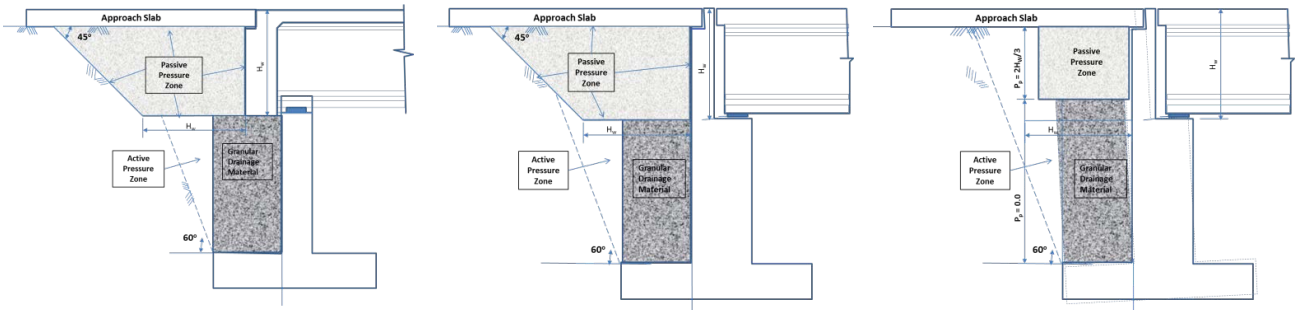

(a) Semi-integral Abutment (b) L-shape Abutment Backwall Fuses (c) L-shape Abutment Backwall Does Not Fuse

Figure 5.2.2 - Abutment Stiffness and Passive Pressure Estimate
Figure 4.2.11-1

Where the passive pressure resistance of soils behind semi-integral or L-shape abutments will be mobilized through large longitudinal superstructure displacements, the bridge may be designed with the abutments as key elements of the longitudinal ERS. Abutments shall be designed to sustain the design earthquake displacements. When abutment stiffness and capacity are included in the design, it should be recognized that the passive pressure zone mobilized by abutment displacement extends beyond the active pressure zone normally used for static service load design. This is illustrated schematically in Figures 4.2.11-1a and 4.2.11-1b. Dynamic active earth pressure acting on the abutment need not be considered in the dynamic analysis of the bridge. The passive abutment resistance shall be limited to 70 percent of the value obtained using the procedure given in Article 5.2.2.1.

5.2.2.1 - Abutment Stiffness and Passive Pressure Estimate

Abutment stiffness, K_{eff} in kip/ft, and passive capacity, P_p in kips, should be characterized by a bilinear or other higher order nonlinear relationship as shown in Figure 5.2.2.1. When the motion of the back wall is primarily translation, passive pressures may be assumed uniformly distributed over the height (H_w) of the backwall or end diaphragm. The total passive force may be determined as:

$$P_p = p_p H_w W_w \qquad (5.2.2.1\text{-}1)$$

Where:

p_p = passive lateral earth pressure behind backwall or diaphragm (ksf)
H_w = height of back wall or end diaphragm exposed to passive earth pressure (feet)
W_w = width of back wall or diaphragm (feet)

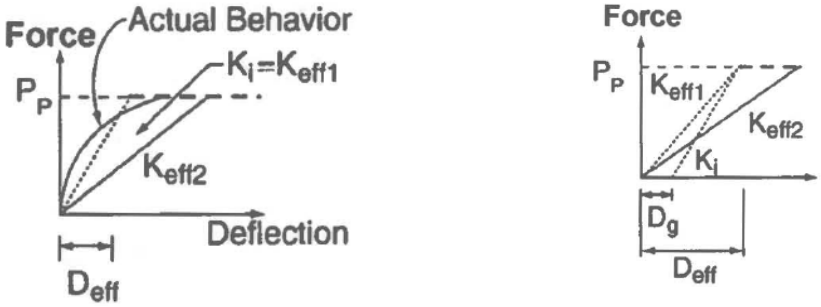

(a) Semi-integral Abutment (b) L-shape Abutment

Figure 5.2.2.1 - Characterization of Abutment Capacity and Stiffness
Figure 4.2.11-2

5.2.2.2 - Calculation of Best Estimate Passive Pressure P_p

If the strength characteristics of compacted or natural soils in the "passive pressure zone" are known, then the passive force for a given height, Hw, may be calculated using accepted analysis procedures. These procedures should account for the interface friction between the wall and the soil. The properties used shall be those indicative of the entire "passive pressure zone" as indicated in Figure 1. Therefore, the properties of backfill present immediately adjacent to the wall in the active pressure zone may not be appropriate as a weaker failure surface can develop elsewhere in the embankment.

For L-shape abutments where the backwall is not designed to fuse, Hw shall conservatively be taken as the depth of the superstructure, unless a more rational soil-structure interaction analysis is performed.

If presumptive passive pressures are to be used for design, then the following criteria shall apply:

- Soil in the "passive pressure zone" shall be compacted in accordance with *Standard Specifications* Section 2-03.3(14)I, which requires compaction to 95 percent maximum density for all “Bridge Approach Embankments”.
- For cohesionless, nonplastic backfill (fines content less than 30 percent), the passive pressure pp may be assumed equal to 2Hw/3 ksf per foot of wall length.

For other cases, including abutments constructed in cuts, the passive pressures shall be developed by a geotechnical engineer.

5.2.2.3 - Calculation of Passive Soil Stiffness

Equivalent linear secant stiffness, K_{eff} in kip/ft, is required for analyses. For semi-integral or L-shape abutments initial secant stiffness may be determined as follows:

$$K_{eff1} = \frac{P_p}{(F_w H_w)} \qquad (5.2.2.3\text{-}1)$$

Where:

P_p = passive lateral earth pressure capacity (kip)
H_w = height of back wall (feet)
F_w = the value of Fw to use for a particular bridge may be found in Table C3.11.1-1 of the AASHTO LRFD.

For L-shape abutments, the expansion gap should be included in the initial estimate of the secant stiffness as specified in:

$$K_{eff1} = \frac{P_p}{(F_w H_w + D_g)} \qquad (5.2.2.3\text{-}2)$$

Where:

D_g = width of gap between backwall and superstructure (feet)

For SDCs C and D, where pushover analyses are conducted, values of P_p and the initial estimate of K_{eff1} should be used to define a bilinear load-displacement behavior of the abutment for the capacity assessment.

5.2.2.4 - Modeling Passive Pressure Stiffness in the Longitudinal Direction

In the longitudinal direction, when the bridge is moving toward the soil, the full passive resistance of the soil may be mobilized, but when the bridge moves away from the soil no soil resistance is mobilized. Since passive pressure acts at only one abutment at a time, linear elastic dynamic models and frame pushover models should only include a passive pressure spring at one abutment in any given model. Secant stiffness values for passive pressure shall be developed independently for each abutment.

As an alternative, for straight or with horizontal curves up to 30 degrees single frame bridges, and compression models in straight multi-frame bridges where the

passive pressure stiffness is similar between abutments, a spring may be used at each abutment concurrently. In this case, the assigned spring values at each end need to

be reduced by half because they act in simultaneously, whereas the actual backfill passive resistance acts only in one direction and at one time. Correspondingly, the actual peak passive resistance force at either abutment will be equal to the sum of the peak forces developed in two springs. In this case, secant stiffness values for passive pressure shall be developed based on the sum of peak forces developed in each spring. If computed abutment forces exceed the soil capacity, the stiffness should be softened iteratively until abutment displacements are consistent (within 30 percent) with the assumed stiffness.

5.2.3 - Transverse Direction

Transverse stiffness of abutments may be considered in the overall dynamic response of bridge systems on a case by case basis upon Bridge Design Engineer approval.

Upon approval, the transverse abutment stiffness used in the elastic demand models may be taken as 50 percent of the elastic transverse stiffness of the adjacent bent.

Girder stops are typically designed to transmit the lateral shear forces generated by small to moderate earthquakes and service loads and are expected to fuse at the design event earthquake level of acceleration to limit the demand and control the damage in the abutments and supporting piles/shafts. Linear elastic analysis cannot capture the inelastic response of the girder stops, wingwalls or piles/shafts. Therefore, the forces generated with elastic demand assessment models should not be used to size the abutment girder stops. Girder stops for abutments supported on a spread footing shall be designed to sustain the lesser of the acceleration coefficient, As, times the superstructure dead load reaction at the abutment plus the weight of abutment and its footing or sliding friction forces of spread footings. Girder stops for pile/shaft supported foundations shall be designed to sustain the sum of 75 percent total lateral capacity of the piles/shafts and shear capacity of one wingwall.

The elastic resistance may be taken to include the use of bearings designed to accommodate the design displacements, soil frictional resistance acting against the base of a spread footing supported abutment, or pile resistance provided by piles acting in their elastic range.

The stiffness of fusing or breakaway abutment elements such as wingwalls (yielding or non-yielding), elastomeric bearings, and sliding footings shall not be relied upon to reduce displacement demands at intermediate piers.

Unless fixed bearings are used, girder stops shall be provided between all girders regardless of the elastic seismic demand. The design of girder stops should consider that unequal forces that may develop in each stop.

When fusing girder stops, transverse shear keys, or other elements that potentially release the restraint of the superstructure are used, then adequate support length meeting the requirements of Article 4.12 of the AASHTO SEISMIC must be provided. Additionally, the expected redistribution of internal forces in the superstructure and other bridge system element must be considered. Bounding analyses considering incremental release of transverse restraint at each end of the bridge should also be considered.

5.2.4 - Curved and Skewed Bridges

Passive earth pressure at abutments may be considered as a key element of the ERS of straight and curved bridges with abutment skews up to 20 degrees. For larger skews, due to a combination of longitudinal and transverse response, the span has a tendency to rotate in the direction of decreasing skew. Such motion will tend to cause binding in the obtuse corner and generate uneven passive earth pressure forces on the abutment, exceeding the passive pressure near one end of the backwall, and providing little or no resistance at other end. This requires a more refined analysis to determine the amount of expected movement. The passive pressure resistance in soils behind semi-integral or L-shape abutments shall be based on the projected width of the abutment wall normal to the centerline of the bridge. Abutment springs shall be included in the local coordinate system of the abutment wall.

4.2.12 Foundation – General

Guide Specifications Article 5.3.1 – The required foundation modeling method (FMM) and the requirements for estimation of foundation springs for spread footings, pile foundations, and drilled shafts shall be based on the WSDOT Geotechnical Engineer's recommendations.

4.2.13 Foundation – Spread Footing

Guide Specifications Article C5.3.2 – Foundation springs for spread footings shall be determined in accordance with Section 7.2.7, *Geotechnical Design Manual* Section 6.5.1.1 and the WSDOT Geotechnical Engineer's recommendations.

4.2.14 Procedure 3: Nonlinear Time History Method

Guide Specifications Article 5.4.4 – The time histories of input acceleration used to describe the earthquake loads shall be selected in consultation with the WSDOT Geotechnical Engineer and the WSDOT Bridge Design Engineer.

4.2.15 I_{eff} for Box Girder Superstructure

Guide Specifications Article 5.6.3 – Gross moment of inertia shall be used for box girder superstructure modeling.

4.2.16 Foundation Rocking

Guide Specifications Article 6.3.9 – Foundation rocking shall not be used for the design of WSDOT bridges.

4.2.17 Drilled Shafts

Guide Specifications Article C6.5 – For WSDOT bridges, the scale factor for p-y curves or subgrade modulus for large diameter shafts shall not be used unless approved by the WSDOT Geotechnical Engineer and WSDOT Bridge Design Engineer.

4.2.18 Longitudinal Direction Requirements

Guide Specifications Article 6.7.1 – Case 2: Earthquake Resisting System (ERS) with abutment contribution may be used provided that the mobilized longitudinal passive pressure is not greater than 70 percent of the value obtained using procedure given in Article 5.2.2.1.

4.2.19 Liquefaction Design Requirements

Guide Specifications Article 6.8 – Soil liquefaction assessment shall be based on the WSDOT Geotechnical Engineer's recommendation and *Geotechnical Design Manual* Section 6.4.2.8.

4.2.20 Reinforcing Steel

Guide Specifications Article 8.4.1 – Reinforcing bars, deformed wire, cold-draw wire, welded plain wire fabric and welded deformed wire fabric shall conform to the material standards as specified in AASHTO LRFD.

ASTM A 615 reinforcement shall not be used in WSDOT Bridges. Only ASTM A 706 Grade 60 reinforcing steel shall be used in members where plastic hinging is expected for SDCs B, C, and D. ASTM A 706 Grade 80 reinforcing steels may be used for capacity-protected members as specified in Article 8.9. ASTM A 706 Grade 80 reinforcing steel shall not be used for oversized shafts where in ground plastic hinging is considered as a part of ERS.

Deformed welded wire fabric may be used with the WSDOT Bridge Design Engineer's approval.

Wire rope or strands for spirals and high strength bars with yield strength in excess of 75 ksi shall not be used.

Guide Specifications Article C8.4.1 – Add the following paragraph to Article C8.4.1.

The requirement for plastic hinging and capacity protected members do not apply to the structures in SDC A, therefore use of ASTM A706 Grade 80 reinforcing steel is permitted in SDC A.

For SDCs B, C, and D, the moment-curvature analyses based on strain compatibility and nonlinear stress strain relations are used to determine the plastic moment capacities of all ductile concrete members. Further research is required to establish the shape and model of the stress-strain curve, expected reinforcing strengths, strain limits, and the stress-strain relationships for concrete confined by lateral reinforcement made with ASTM A 706 Grade 80 reinforcing steel.

4.2.21 Concrete Modeling

Guide Specifications Article 8.4.4- Revise the last paragraph as follows:

Where in-ground plastic hinging approved by the WSDOT Bridge Design Engineer is part of the ERS, the confined concrete core shall be limited to a maximum compressive strain of 0.008. The clear spacing between the longitudinal reinforcements and between spirals and hoops in drilled shafts shall not be less than 6 inches or more than 8 inches when tremie placement of concrete is anticipated.

4.2.22 Expected Nominal Moment Capacity

Guide Specifications Article 8.5 – Add the following paragraphs after third paragraph.

The expected nominal capacity of capacity protected member using ASTM A 706 Grade 80 reinforcement shall be determined by strength design based on the expected concrete strength and yield strength of 80 ksi when the concrete reaches 0.003 or the reinforcing steel strain reaches 0.090 for #10 bars and smaller, 0.060 for #11 bars and larger.

Replace the definition of λ_{mo} with the following:

λ_{mo} = overstrength factor
= 1.2 for ASTM A 706 Grade 60 reinforcement
= 1.4 for ASTM A 615 Grade 60 reinforcement

4.2.23 Interlocking Bar Size

Guide Specifications Article 8.6.7 – The longitudinal reinforcing bar inside the interlocking portion of column (interlocking bars) shall be the same size of bars used outside the interlocking portion.

4.2.24 Splicing of Longitudinal Reinforcement in Columns Subject to Ductility Demands for SDCs C and D

Guide Specifications Article 8.8.3 – The splicing of longitudinal column reinforcement outside the plastic hinging region shall be accomplished using mechanical couplers that are capable of developing the tensile strength of the spliced bar. Splices shall be staggered at least 2 feet. Lap splices shall not be used. The design engineer shall clearly identify the locations where splices in longitudinal column reinforcement are permitted on the plans. In general where the length of the rebar cage is less than 60 ft (72 ft for No. 14 and No. 18 bars), no splice in the longitudinal reinforcement shall be allowed.

4.2.25 Development Length for Column Bars Extended into Oversized Pile Shafts f or SDCs C and D

Guide Specifications Article 8.8.10 – Extending column bars into oversized shaft shall be per Section 7.4.4.C, based on TRAC Report WA-RD 417.1 "Non-Contact Lap Splice in Bridge Column-Shaft Connections."

4.2.26 Lateral Confinement for Oversized Pile Shaft for SDCs C and D

Guide Specifications Article 8.8.12 – The requirement of this article for shaft lateral reinforcement in the column-shaft splice zone may be replaced with Section 7.8.2 K.

4.2.27 Lateral Confinement for Non-Oversized Strengthened Pile Shaft for SDCs C and D

Guide Specifications Article 8.8.13 – Non oversized column shaft (the cross section of the confined core is the same for both the column and the pile shaft) is not permissible unless approved by the WSDOT Bridge Design Engineer.

4.2.28 Requirements for Capacity Protected Members

Guide Specifications Article 8.9 – Add the following paragraphs:

For SDCs C and D where liquefaction is identified, with the WSDOT Bridge Design Engineer's approval, pile and drilled shaft in-ground hinging may be considered as an ERE. Where in-ground hinging is part of ERS, the confined concrete core should be limited to a maximum compressive strain of 0.008 and the member ductility demand shall be limited to 4.

Bridges shall be analyzed and designed for the non-liquefied condition and the liquefied condition in accordance with Article 6.8. The capacity protected members shall be designed in accordance with the requirements of Article 4.11. To ensure the formation of plastic hinges in columns, oversized pile shafts shall be designed for an expected nominal moment capacity, Mne, at any location along the shaft, that is, equal to 1.25 times moment demand generated by the overstrength column plastic hinge moment and associated shear force at the base of the column. The safety factor of 1.25 may be reduced to 1.0 depending on the soil properties and upon the WSDOT Bridge Design Engineer's approval.

The design moments below ground for extended pile shaft may be determined using the nonlinear static procedure (pushover analysis) by pushing them laterally to the displacement demand obtained from an elastic response spectrum analysis. The point of maximum moment shall be identified based on the moment diagram. The expected plastic hinge zone shall extend 3D above and below the point of maximum moment. The plastic hinge zone shall be designated as the "no splice" zone and the transverse steel for shear and confinement shall be provided accordingly.

4.2.29 Superstructure Capacity Design for Transverse Direction (Integral Bent Cap) for SDCs C and D

Guide Specifications Article 8.11 – Revise the last paragraph as follows:

For SDCs C and D, the longitudinal flexural bent cap beam reinforcement shall be continuous. Splicing of cap beam longitudinal flexural reinforcement shall be accomplished using mechanical couplers that are capable of developing a minimum tensile strength of 85 ksi. Splices shall be staggered at least 2 feet. Lap splices shall not be used.

4.2.30 Superstructure Design for Non Integral Bent Caps for SDCs B, C, and D

Guide Specifications Article 8.12 – Non integral bent caps shall not be used for continuous concrete bridges in SDC B, C, and D except at the expansion joints between superstructure segments.

4.2.31 Joint Proportioning

Guide Specifications Article 8.13.4.1.1 – Revise the last bullet as follows:

Exterior column joints for box girder superstructure and other superstructures if the cap beam extends the joint far enough to develop the longitudinal cap reinforcement.

4.2.32 Cast-in-Place and Precast Concrete Piles

Guide Specifications Article 8.16.2 – Minimum longitudinal reinforcement of 0.75 percent of A_g shall be provided for CIP piles in SDCs B, C, and D. Longitudinal reinforcement shall be provided for the full length of pile unless approved by the WSDOT Bridge Design Engineer.

4.3 Seismic Design Requirements for Bridge Modifications and Widening Projects

4.3.1 General

A bridge widening is defined as where substructure bents are modified and new columns or piers are added, or an increase of bridge deck width or widenings to the sidewalk or barrier rails of an existing bridge resulting in significant mass increase or structural changes.

Bridge widenings in Washington State shall be designed in accordance with the requirements of the current edition of the AASHTO LRFD. The seismic design shall be in accordance with the requirements of the AASHTO SEISMIC, and WSDOT BDM. The spectral response parameters shall be determined using USGS 2014 Seismic Hazard Maps and Site Coefficients defined in Section 4.2.3. The widening portion (new structure) shall be designed to meet current WSDOT standards for new bridges. Seismic analysis is not required for single-span bridges and bridges in SDC A. However, existing elements of single span bridges shall meet the requirements of AASHTO Seismic as applicable.

4.3.2 Bridge Widening Project Classification

Bridge widening projects are classified according to the scope of work as either minor or major widening projects.

A. Minor Modification and Widening Projects

A bridge widening project is classified as a minor widening project if all of the following conditions are met:

- Substructure bents are not modified and no new columns or piers are added, while abutments may be widened to accommodate the increase of bridge deck width.
- The net superstructure mass increase is equal or less than 10 percent of the original superstructure mass.
- Fixity conditions of the foundations are unchanged.
- There are no major changes of the seismicity of the bridge site that can increase seismic hazard levels or reduce seismic performance of the structure since the initial screening or most recent seismic retrofit.
- No change in live load use of the bridge

B. Major Modifications and Widening Projects

A bridge widening project is classified as a major widening project if any of the following conditions are met:

- Substructure bents are modified and new columns or piers are added, excepting abutments, which may be widened to accommodate the increase of bridge deck width.
- The net superstructure mass increase is more than 20 percent of the original superstructure mass.

- Fixity conditions of the foundations are changed.
- There are major changes of the seismicity of the bridge site that can increase seismic hazard levels or reduce seismic performance of the structure since the initial screening or most recent seismic retrofit.
- Change in live load use of the bridge

Major changes in seismicity include, but are not limited to, the following: near fault effect, significant liquefaction potential, or lateral spreading. If there are concerns about changes to the Seismic Design Response Spectrum at the bridge site, about a previous retrofit to the existing bridge, or an unusual imbalance of mass distribution resulting from the structure widening, the designer should consult the WSDOT Bridge and Structures Office.

4.3.3 Seismic Design Guidance:

The Seismic Design guidance for Bridge Modifications and Widening are as follows:

1. Bridge widening projects classified as Minor Widening projects do not require either a seismic evaluation or a retrofit of the structure. If the conditions for Minor Widening project are met, it is anticipated that the widened/modified structure will not draw enough additional seismic demand to significantly affect the existing sub-structure elements.
2. If the net superstructure mass increase is between 10 percent to 20 percent of the original superstructure mass, and if all the other bulleted criteria listed for Minor Widening projects are met, then the “Do No Harm” policy and professional judgment could be used upon approval of the Bridge Design Engineer. The "Do No Harm" policy requires the designer to compare the C/D ratios of the existing bridge elements in the before widening condition to those of the after widening condition. If the C/D ratios are not decreased, the widening can be designed and constructed without retrofitting existing deficient bridge elements. Elements of the existing structure with C/D ratios made worse by the widening/modification work shall be retrofitted to restore their C/D ratios to before-widening values, at a minimum. Foundation elements with seismic deficiencies (C/D ratios made worse by the widening/modification work) shall be deferred to the Seismic Retrofit Program for rehabilitation.
3. Seismic analysis is required for all Major Modifications and Widening projects at project scoping level. A complete seismic analysis is required for bridges in Seismic Design Category (SDC) B, C, and D for major modifications and widening projects as described below. A project geotechnical report (including any unstable soil or liquefaction issues) shall be available to the structural engineer for seismic analysis. Seismic analysis shall be performed for both existing and widened structures. Capacity/Demand (C/D) ratios are required for existing bridge elements including foundation.
4. The widening portion of the structure shall be designed for liquefiable soils condition in accordance to the AASHTO Seismic, and WSDOT BDM, unless soils improvement is provided to eliminate liquefaction.

5. Seismic improvement of existing columns and crossbeams to C/D > 1.0 is required. The cost of seismic improvement shall be paid for with widening project funding (not from the Retrofit Program). The seismic retrofit of the existing structure shall conform to the BDM, while the newly widened portions of the bridge shall comply with the AASHTO Seismic, except for balanced stiffness criteria, which may be difficult to meet due to the existing bridge configuration. However, the designer should strive for the best balanced frame stiffness for the entire widened structure that is attainable in a cost effective manner. Major Widening Projects require the designer to determine the seismic C/D ratios of the existing bridge elements in the final widened condition. If the C/D ratios of columns and crossbeam of existing structure are less than 1.0, the improvement of seismically deficient elements is mandatory and the widening project shall include the improvement of existing seismically deficient bridge elements to C/D ratio of above 1.0 as part of the widening project funding. The C/D ratio of 1.0 is required to prevent the collapse of the bridge during the seismic event as required for life safety. Seismic improvement of the existing foundation elements (footings, pile caps, piles, and shafts to C/D ratios > 1.0) could be deferred to the Bridge Seismic Retrofit Program.

Modifications or Widening	Alterations	Seismic Design Guidance	Illustration
Minor Modifications • Deck Rehabilitations • Traffic Barrier Replacements • sidewalk addition/ rehabilitation • No change in LL use	• Superstructure mass increase is less than 10% • Fixity conditions are not changed	• Do not Require seismic evaluation • Do not require retrofit of the structure	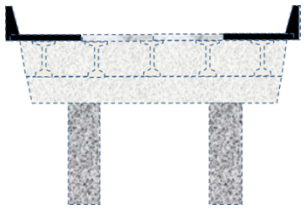
Major Modifications Minor Modifications PLUS • Replacing/adding girder and slab • Change in LL use	• Superstructure mass increase between 10% to 20% and/or • Fixity conditions are changed	• Seismic evaluation of the structure is required. • Do-No-Harm is required for substructure. • Do-No-Harm is required for foundation.	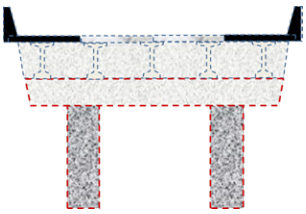
Major Widening – Case 1 Minor Modifications PLUS • Superstructure or Bent Widening	• Superstructure mass increase is more than > 20% and/or • Substructure/bents modified and/or • Fixity conditions are changed	• Seismic evaluation of the structure is required. • C/D ratio of equal or greater than 1.0 is required for substructure. • Do-No-Harm could be used for Foundation.	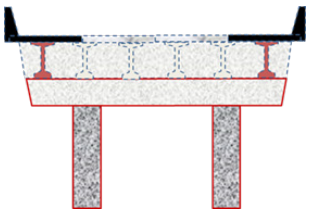
Major Widening – Case 2 • widening on one side	• Substructure or bents are modified. Columns are added on one side.	• Seismic evaluation of the structure is required. • C/D ratio of equal or greater than 1.0 is required for substructure. • Do-No-Harm could be used for Foundation.	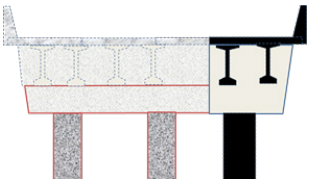
Major Widening – Case 3 • widening on both sides	• Substructure or bents are modified. Columns are added on both sides.	• Seismic evaluation of the structure is required. • C/D ratio of equal or greater than 1.0 is required for substructure. • Do-No-Harm could be used for Foundation.	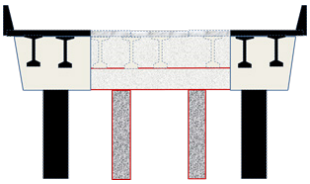

Seismic Design Criteria for Bridge Modifications and Widening
Figure 4.3-1

4.3.4 Scoping for Bridge Widening and Liquefaction Mitigation

The Region project manager should contact the Bridge Office for bridge widening and retaining wall scoping assistance before project funding commitments are made to the legislature and the public. The Bridge Office will work with the Geotechnical Office to assess the potential for liquefaction or other seismic hazards that could affect the cost of the proposed structures. The initial evaluation design time and associated costs for the Geotechnical and Bridge Offices shall be considered at the scoping phase.

4.3.5 Design and Detailing Considerations

Support Length – The support length at existing abutments, piers, in-span hinges, and pavement seats shall be checked. If there is a need for longitudinal restrainers, transverse restrainers, or additional support length on the existing structure, they shall be included in the widening design.

Connections Between Existing and New Elements – Connections between the new elements and existing elements should be designed for maximum over-strength forces. Where yielding is expected in the crossbeam connection at the extreme event limit state, the new structure shall be designed to carry live loads independently at the Strength I limit state. In cases where large differential settlement and/or a liquefaction-induced loss of bearing strength are expected, the connections may be designed to deflect or hinge in order to isolate the two parts of the structure. Elements subject to inelastic behavior shall be designed and detailed to sustain the expected deformations.

Longitudinal joints between the existing and new structure are not permitted.

Differential Settlement – The geotechnical designer should evaluate the potential for differential settlement between the existing structure and widening structure. Additional geotechnical measures may be required to limit differential settlements to tolerable levels for both static and seismic conditions. The bridge designer shall evaluate, design, and detail all elements of new and existing portions of the widened structure for the differential settlement warranted by the WSDOT Geotechnical Engineer. Angular distortions between adjacent foundations greater than 0.008 (RAD) in simple spans and 0.004 (RAD) in continuous spans should not be permitted in settlement criteria.

The horizontal displacement of pile and shaft foundations shall be estimated using procedures that consider soil-structure interaction (see *Geotechnical Design Manual* Section 8.12.2.3). Horizontal movement criteria should be established at the top of the foundation based on the tolerance of the structure to lateral movement with consideration of the column length and stiffness. Tolerance of the superstructure to lateral movement will depend on bridge seat widths, bearing type(s), structure type, and load distribution effects.

Foundation Types – The foundation type of the new structure should match that of the existing structure. However, a different type of foundation may be used for the new structure due to geotechnical recommendations or the limited space available between existing and new structures. For example, a shaft foundation may be used in lieu of spread footing.

Existing Strutted Columns – The horizontal strut between existing columns may be removed. The existing columns shall then be analyzed with the new unbraced length and retrofitted if necessary.

Non Structural Element Stiffness – Median barrier and other potentially stiffening elements shall be isolated from the columns to avoid any additional stiffness to the system.

Deformation capacities of existing bridge members that do not meet current detailing standards shall be determined using the provisions of Section 7.8 of the *Retrofitting Manual for Highway Structures: Part 1 – Bridges*, FHWA-HRT-06-032. Deformation capacities of existing bridge members that meet current detailing standards shall be determined using the latest edition of the AASHTO SEISMIC.

Joint shear capacities of existing structures shall be checked using *Caltrans Bridge Design Aid*, 14-4 Joint Shear Modeling Guidelines for Existing Structures.

In lieu of specific data, the reinforcement properties provided in Table 4.3.2-1 should be used.

Property	Notation	Bar Size	ASTM A706	ASTM A615 Grade 60	ASTM A615 Grade 40*
Specified minimum yield stress (ksi)	f_y	No. 3 - No. 18	60	60	40
Expected yield stress (ksi)	f_{ye}	No. 3 - No. 18	68	68	48
Expected tensile strength (ksi)	f_{ue}	No. 3 - No. 18	95	95	81
Expected yield strain	ε_{ye}	No. 3 - No. 18	0.0023	0.0023	0.00166
Onset of strain hardening	ε_{sh}	No. 3 - No. 8	0.0150	0.0150	0.0193
		No. 9	0.0125	0.0125	
		No. 10 & No. 11	0.0115	0.0115	
		No. 14	0.0075	0.0075	
		No. 18	0.0050	0.0050	
Reduced ultimate tensile strain	ε_{su}^{R}	No. 4 - No. 10	0.090	0.060	0.090
		No. 11 - No. 18	0.060	0.040	0.060
Ultimate tensile strain	ε_{su}	No. 4 - No. 10	0.120	0.090	0.120
		No. 11 - No. 18	0.090	0.060	0.090

* ASTM A615 Grade 40 is for existing bridges in widening projects.

Stress Properties of Reinforcing Steel Bars
Table 4.3.2-1

Isolation Bearings – Isolation bearings may be used for bridge widening projects to reduce the seismic demand through modification of the dynamic properties of the bridge. These bearings are a viable alternative to strengthening weak elements or non-ductile bridge substructure members of the existing bridge. Use of isolation bearings needs the approval of WSDOT Bridge Design Engineer. Isolation bearings shall be designed per the requirements specified in Section 9.3.

4.4 Seismic Retrofitting of Existing Bridges

Seismic retrofitting of existing bridges shall be performed in accordance with the FHWA publication FHWA-HRT-06-032, *Seismic Retrofitting Manual for Highway Structures: Part 1 – Bridges* and WSDOT amendments as follows:

- Article 1.5.3 The spectral response parameters shall be determined using USGS 2014 Seismic Hazard Maps and Site Coefficients defined in Section 4.2.3.
- Article 7.4.2 Seismic Loading in Two or Three Orthogonal Directions

Revise the first paragraph as follows:

When combining the response of two or three orthogonal directions the design value of any quantity of interest (displacement, bending moment, shear or axial force) shall be obtained by the 100-30 percent combination rule as described in AASHTO *Guide Specifications* Article 4.4.

- Delete Eq. 7.44 and replace with the following:

$$L_p = \text{the maximum of } [(8800\varepsilon_y d_b) \text{ or } (0.08L + 4400\varepsilon_y d_b)] \quad (7\text{-}44)$$

- Delete Eq. 7.49 and replace with the following:

$$\phi_p = \left(5\left(\frac{V_i - V_m}{V_i - V_f}\right) + 2\right)\phi_y \quad (7.49)$$

- Delete Eq. 7.51 and replace with the following:

$$\phi_p = \left(4\left(\frac{V_{ji} - V_{jh}}{V_{ji} - V_{jf}}\right) + 2\right)\phi_y \quad (7.51)$$

4.4.1 Seismic Analysis Requirements

The first step in retrofitting a bridge is to analyze the existing structure to identify seismically deficient elements. The initial analysis consists of generating capacity/demand ratios for all relevant bridge components. Seismic displacement and force demands shall be determined using the multi-mode spectral analysis of Section 5.4.2.2 (at a minimum). Prescriptive requirements, such as support length, shall be considered a demand and shall be included in the analysis. Seismic capacities shall be determined in accordance with the requirements of the *Seismic Retrofitting Manual*. Displacement capacities shall be determined by the Method D2 – Structure Capacity/Demand (Pushover) Method of Section 5.6. For most WSDOT bridges, the seismic analysis need only be performed for the upper level (1,000 year return period) ground motions with a life safety seismic performance level.

4.4.2 Seismic Retrofit Design

Once seismically deficient bridge elements have been identified, appropriate retrofit measures shall be selected and designed. Table 1-11, Chapters 8, 9, 10, 11, and Appendices D thru F of the *Seismic Retrofitting Manual* shall be used in selecting and designing the seismic retrofit measures. The WSDOT Bridge and Structure Office Seismic Specialist will be consulted in the selection and design of the retrofit measures.

4.4.3 Computer Analysis Verification

The computer results will be verified to ensure accuracy and correctness. The designer should use the following procedures for model verification:

- Using graphics to check the orientation of all nodes, members, supports, joint, and member releases. Make sure that all the structural components and connections correctly model the actual structure.
- Check dead load reactions with hand calculations. The difference should be less than 5 percent.
- Calculate fundamental and subsequent modes by hand and compare results with computer results.
- Check the mode shapes and verify that structure movements are reasonable.
- Increase the number of modes to obtain 90 percent or more mass participation in each direction. GTSTRUDL/SAP2000 directly calculates the percentage of mass participation.
- Check the distribution of lateral forces. Are they consistent with column stiffness? Do small changes in stiffness of certain columns give predictable results?

4.4.4 Earthquake Restrainers

Longitudinal restrainers shall be high strength steel rods conform to ASTM F 1554 Grade 105, including Supplement Requirements S2, S3 and S5. Nuts, and couplers if required, shall conform to ASTM A 563 Grade DH. Washers shall conform to AASHTO M 293. High strength steel rods and associated couplers, nuts and washers shall be galvanized after fabrication in accordance with AASHTO M 232. The length of longitudinal restrainers shall be less than 24 feet.

4.4.5 Isolation Bearings

Isolation bearings may be used for seismic retrofit projects to reduce the demands through modification of the dynamic properties of the bridge as a viable alternative to strengthening weak elements of non-ductile bridge substructure members of existing bridge. Use of isolation bearings needs the approval of WSDOT Bridge Design Engineer. Isolation bearings shall be designed per the requirements specified in Section 9.3.

4.5 Seismic Design Requirements for Retaining Walls

4.5.1 General

All retaining walls shall include seismic design load combinations. The design acceleration for retaining walls shall be determined in accordance with the AASHTO SEISMIC. Once the design acceleration is determined, the designer shall follow the applicable design specification requirements listed in Appendix 8.1-A1:

Exceptions to the cases described in Appendix 8.1-A1 may occur with approval from the WSDOT Bridge Design Engineer and/or the WSDOT Geotechnical Engineer.

4.6 Appendices

Appendix 4-B1 Design Examples of Seismic Retrofits

Appendix 4-B2 SAP2000 Seismic Analysis Example

4.99 References

AASHTO *LRFD Bridge Design Specifications*, 6th Edition, 2012

AASHTO *Guide Specifications for LRFD Seismic Bridge Design*, 2nd Edition, 2011

AASHTO *Guide Specifications for Seismic Isolation Design*, 3rd Edition, 2010

Caltrans *Bridge Design Aids* 14 4 Joint Shear Modeling Guidelines for Existing Structures, California Department of Transportation, August 2008

FHWA *Seismic Retrofitting Manual for Highway Structures: Part 1 Bridges*, Publication No. FHWA-HRT-06-032, January 2006

McLean, D.I. and Smith, C.L., *Noncontact Lap Splices in Bridge Column-Shaft Connections*, Report Number WA-RD 417.1, Washington State University

WSDOT *Geotechnical Design Manual* M 46-03, Environmental and Engineering Program, Geotechnical Services, Washington State Department of Transportation

Design Example – Restrainer Design

FHWA-HRT-06-032 *Seismic Retrofitting Manual for Highway Structures: Part 1 - Bridges*, Example 8.1 Restrainer Design by Iterative Method

N =	12.00 "	Seat Width (inch)
d_c =	2.00 "	concrete cover on vertical faces at seat (inch)
"G" =	1.00 "	expansion joint gap (inch). For new structures, use maximum estimated opening.
F.S. =	0.67	safety factor against the unseating of the span
F_y =	176.00 ksi	restrainer yield stress (ksi)
E =	10,000	restrainer modulus of elasticity (ksi)
L =	18.00 '	restrainer length (ft.)
D_{rs} =	1.00 "	restrainer slack (inch)
W_1 =	5000.00	the weight of the less flexible frame (kips) (Frame 1)
W_2 =	5000.00	the stiffness of the more flexible frame (kips) (Frame 2)
K_1 =	2040	the stiffness of the less flexible frame (kips/in) (Frame 1)
K_2 =	510	the stiffness of the more flexible frame (kips/in) (Frame 2) OK
μ_d =	4.00	Target displacement ductility of the frames
g =	386.40	acceleration due to gravity (in/sec^2)
ξ =	0.05	design spectrum damping ratio
S_{DS} =	1.75	short period coefficient $S_{DS} = F_a S_s$
S_{D1} =	0.70	long period coefficient $S_{D1} = F_v S_1$
A_s =	0.28	effective peak ground acceleration coefficient
Δ_{tol} =	0.05 "	converge tolerance

Calculate the period at the end of constant design spectral acceleration plateau (sec)

$$T_s = \frac{S_{D1}}{S_{DS}} = 0.7 / 1.75 = 0.4 \text{ sec}$$

Calculate the period at beginning of constant design spectral acceleration plateau (sec)

$$T_o = 0.2 T_s = 0.2 * 0.4 = 0.08 \text{ sec}$$

Step 1: Calculate Available seat width, D_{as}

D_{as} = 12 - 1 - 2 * 2 = 7 " 0.67 * 7 = 4.69 "

Step 2: Calculate Maximum Allowable Expansion Joint Displacement and compare to the available seat width.

D_r = 1 + 176 * 18 * 12 / 10000 = 4.8 " > = 4.69 " NG

Step 3: Compute expansion joint displacement without restrainers

The effective stiffness of each frame are modified due to yielding of frames.

$K_{1,eff}$ = 2040 / 4 = 510 kip/in

$K_{2,eff}$ = 510 / 4 = 127.5 kip/in

The effective natural period of each frame is given by:

$$T_{1,eff} = 2\pi\sqrt{\frac{W_1}{gK_{1,eff}}}$$ = 2 * PI() *(5000 / (386.4 * 510))^0.5 = 1 sec.

$$T_{2,eff} = 2\pi\sqrt{\frac{W_2}{gK_{2,eff}}}$$ = 2 * PI() *(5000 / (386.4 * 127.5))^0.5 = 2 sec.

The effective damping and design spectrum correction factor is:

ξ_{eff} = 0.05 + (1 - 0.95 /(4) ^ 0.5 - 0.05 * (4) ^ 0.5) / PI() = 0.19

c_d = 1.5 / (40 * 0.19 + 1) + 0.5 = 0.68

Determine the frame displacement from Design Spectrum

$T_{1,eff}$ = 1.00 sec. $S_a(T_{1,eff})$ = 0.699

$T_{2,eff}$ = 2.00 sec. $S_a(T_{2,eff})$ = 0.350

Modified displacement for damping other than 5 percent damped bridges

$$D_1 = \left(\frac{T_{1,eff}}{2\pi}\right)^2 c_d\, S_a(T_{1,eff})\, g$$ = (1 / (2*PI()))^2 * 0.68* 0.699 * 386.4 = 4.65 "

$$D_2 = \left(\frac{T_{2,eff}}{2\pi}\right)^2 c_d\, S_a(T_{2,eff})\, g$$ = (2 / (2*PI()))^2 * 0.68* 0.35 * 386.4 = 9.3 "

The relative displacement of the two frames can be calculated using the CQC combination of the two frame displacement as given by equation (Eq. 3)

the frequency ratio of modes, $\beta = \frac{\omega_1}{\omega_2} = \frac{T_2}{T_1}$ = 2 / 1 = 2

The cross-correlation coefficient,

$$\rho_{12} = \frac{8\xi_{eff}^2(1+\beta)\beta^{3/2}}{(1-\beta^2)^2 + 4\xi_{eff}^2\beta(1+\beta)^2}$$

ρ_{12} = (8 * 0.19 ^2)*(1 + 2)*(2 ^(3/2))/((1 - 2 ^2)^2 + 4* 0.19 ^2* 2 *(1+ 2)^2) = 0.2

The initial relative hinge displacement

D_{eq_o} = (4.65 ^2 + 9.3 ^2 - 2 * 0.2 * 4.65 * 9.3) ^ 0.5 = 9.52 " >=2/3 Das = 4.69 "

Restrainers are required

Step 4: Estimate the Initial restrainer stiffness

$$K_{eff_{\mathrm{mod}}} = \frac{K_{1,eff}\,K_{2,eff}}{K_{1,eff} + K_{2,eff}}$$ = (510 * 127.5) / (510 + 127.5) = 102 kip/in

$$K_{r_1} = \frac{K_{eff_{\mathrm{mod}}}(D_{eq_o} - D_r)}{D_{eq_o}}$$ = 102 * (9.52 - 4.8) / 9.52 = 50.54 kip/in

Adjust restrainer stiffness to limit the joint displacement to a prescribed value D_r.
This can be achieve by using Goal Seek on the Tools menu.

Goal Seek		
Set Cell	J104	Cell Address for $\Delta = D_{eq} - D_r$
To Value		
By Changing Cell	D104	Cell address for initial guess

Apply the Goal Seek every time you use the spreadsheet and Click OK

K_r = 193.21 kip/in (Input a value to start) Δ = 0.00 "

Step 5: Calculate Relative Hinge Displacement from modal analysis.

Frame 1 mass m_1 = 5000 / 386.4 = 12.94 kip. Sec^2 / in
Frame 2 mass m_2 = 5000 / 386.4 = 12.94 kip. Sec^2 / in
$K_{1,eff}$ = 510.00 kip/in $K_{2,eff}$ = 127.50 kip/in

Solve the following quadratic equation for natural frequencies

$$A(\omega_i^2)^2 + B(\omega_i^2) + C = 0$$

$A = m_1 m_2$ = 12.94 * 12.94 = 167.44

$B = -m_1(K_{2,eff} + K_r) - m_2(K_{1,eff} + K_r)$
= - 12.94 * (127.5 + 193.21) - 12.94 * (510 + 193.21) = -13249.52

$C = K_{1,eff}\,K_{2,eff} + (K_{1,eff} + K_{2,eff})\,K_r$

C = 510 * 127.5 + (510 + 127.5) * 193.21 = 188197.22

The roots of this quadratic are

ω_1^2 = (-(-13249.52) +((-13249.52) ^2-4* 167.44 * 188197.22)^0.5)/(2*167.44) = 60.57

ω_2^2 = (-(-13249.52-((-13249.52)^2-4*167.44*188197.22)^0.5)/(2*167.44) = 18.56

The natural frequencies are

ω_1 = 7.78 rad/sec ω_2 = 4.31 rad/sec

The corresponding natural periods are

$T = \frac{2\pi}{\omega}$ $T_{1,eff}$ = 0.81 sec. $T_{2,eff}$ = 1.46 sec.

For mode 1, ω_1 = 7.78 rad/sec ω_1^2 = 60.57

$K_{1,eff} + K_r - m_1\omega_1^2$ = 510 + 193.21 - 12.94 * 60.57 = -80.61

The relative value (modal shape) corresponding

$$\frac{\phi_{11}}{\phi_{21}} = \frac{K_r}{K_{1,eff} + K_r - m_1\omega_1^2}$$ = 193.21 / -80.61 = -2.397

It is customary to describe the normal modes by assigning a unit value to one of the amplitudes.
For the first mode, set ϕ_{21} = 1.00 then ϕ_{11} = -2.40
The mode shape for the first mode is

$$\{\phi_1\} = \begin{Bmatrix}\phi_{11}\\ \phi_{21}\end{Bmatrix} = \begin{Bmatrix}-2.40\\ 1.00\end{Bmatrix}$$

For mode 2, ω_2 = 4.31 rad/sec ω_2^2 = 18.56

$K_{1,eff} + K_r - m_1\omega_2^2$ = 510 + 193.21 - 12.94 * 18.56 = 463.11

The relative value

$$\frac{\phi_{12}}{\phi_{22}} = \frac{K_r}{K_{1,eff} + K_r - m_1\omega_2^2}$$ = 193.21 / 463.11 = 0.417

For the 2nd mode, set ϕ_{12} = 1.00 then ϕ_{22} = 2.40

The mode shape for the 2nd mode is

$$\{\phi_2\} = \begin{Bmatrix} \phi_{12} \\ \phi_{22} \end{Bmatrix} = \begin{Bmatrix} 1.00 \\ 2.40 \end{Bmatrix}$$

Calculate the participation factor for mode " 1 " $P_1 = \frac{\{\phi_1\}^T[M]\{1\}}{\{\phi_1\}^T[K]\{\phi_1\}}(\{a\}^T\{\phi_1\})$

$\{\phi_1\}^T[M]\{1\} = m_1\phi_{11} + m_2\phi_{21}$ = 12.94 * -2.4 + 12.94 * 1 = -18.08

$\{\phi_1\}^T[K]\{\phi_1\} = (K_{1,eff} + K_r)\phi_{11}^2 - 2K_r\phi_{11}\phi_{21} + (K_{2,eff} + K_r)\phi_{21}^2$

= (510 + 193.21) * (-2.4) ^2 - 2* 193.21 * -2.4 * 1 + (127.5 + 193.21) * (1) ^2 = 5286.98

$\{a\}^T\{\phi_1\} = \phi_{21} - \phi_{11}$ = 1 - -2.4 = 3.4

P_1 = -18.08 / 5286.98 * 3.4 = -0.0116 sec.^{2}

Calculate the participation factor for mode " 2 " $P_2 = \frac{\{\phi_2\}^T[M]\{1\}}{\{\phi_2\}^T[K]\{\phi_2\}}(\{a\}^T\{\phi_2\})$

$\{\phi_2\}^T[M]\{1\} = m_1\phi_{12} + m_2\phi_{22}$ = 12.94 * 1 + 12.94 * 2.4 = 43.96

$\{\phi_2\}^T[K]\{\phi_1\} = (K_{1,eff} + K_r)\phi_{12}^2 - 2K_r\phi_{12}\phi_{22} + (K_{2,eff} + K_r)\phi_{22}^2$

= (510 + 193.21) * (1) ^2 - 2* 193.21 * 1 * 2.4 + (127.5 + 193.21) * (2.4) ^2 = 1619.53

$\{a\}^T\{\phi_2\} = \phi_{22} - \phi_{12}$ = 2.4 - 1 = 1.4

P_2 = 43.96 / 1619.53 * 1.4 = 0.0379 sec.^{2}

Determine the frame displacement from Design Spectrum

$T_{1,eff}$ = 0.81 sec. $S_a(T_{1,eff})$ = 0.867

$T_{2,eff}$ = 1.46 sec. $S_a(T_{2,eff})$ = 0.480

Calculate new relative displacement at expansion joint

$D_{eq1} = P_1 c_d S_a(T_{1,eff}, 0.05)\, g =$ -0.0116 * 0.68 * 0.867 * 386.4 = -2.64 "

$D_{eq2} = P_2 c_d S_a(T_{2,eff}, 0.05)\, g =$ 0.0379 * 0.68 * 0.48 * 386.4 = 4.77 "

The effective period ratio

$$\beta = \frac{\omega_1}{\omega_2} = \frac{T_{2,eff}}{T_{1,eff}}$$ = 1.46 / 0.81 = 1.81

The cross-correlation coefficient,

ρ_{12} = (8 * 0.19 ^2)*(1+ 1.81)*(1.81 ^(3/2))/((1 -1.81 ^2)^2+4* 0.19 ^2* 1.81 *(1+1.81)^2)

= 0.26

D_{eq_1} = ((-2.64)^2 + (4.77)^2+2* 0.26 * (-2.64) * (4.77))^0.5 = 4.8 "

>4.8 "

$\Delta = D_{eq} - D_r$ = 4.8 - 4.8 = 0 "

OK Go to Step 7 and calculate the number of restrainers

Step 7: Calculate number of restrainers

$$N_r = \frac{K_r D_r}{F_y A_r}$$

D_r = 4.80 " K_r = 193.21 kip/in F_y = 176.00 ksi

A_r = 0.222 in^2

N_r = (193.21 * 4.8) / (176 * 0.222) = 23.74 restrainers

Appendix 4-B2 SAP2000 Seismic Analysis Example

1. Introduction

This example serves to illustrate the procedure used to perform nonlinear static "pushover" analysis in both the longitudinal and transverse directions in accordance with the *AASHTO Guide Specifications for LRFD Seismic Bridge Design* using SAP2000. A full model of the bridge is used to compute the displacement demand from a response-spectrum analysis. To perform the pushover analysis in the longitudinal direction, the entire bridge is pushed in order to include the frame action of the superstructure and adjacent bents. To perform the pushover analysis in the transverse direction, a bent is isolated using the SAP2000 "staged construction" feature. The example bridge is symmetric and has three spans. It is assumed the reader has some previous knowledge of how to use SAP2000. This example was created using SAP2000 version 14.2.0.

Note: By producing this example, the Washington State Department of Transportation does not warrant that the SAP2000 software does not include errors. The example does not relieve Design Engineers of their professional responsibility for the software's accuracy and is not intended to do so. Design Engineers should verify all computer results with hand calculations.

Brief Table of Contents of Example:

1. Introduction 1

2. Model Setup 2
   - 2.1 Overview of Model 2
   - 2.2 Foundations Modeling 3
   - 2.3 Materials Modeling 6
   - 2.4 Column Modeling 15
   - 2.5 Crossbeam Modeling 19
   - 2.6 Superstructure Modeling 20
   - 2.7 Gravity Load Patterns 22

3. Displacement Demand Analysis 23
   - 3.1 Modal Analysis 23
   - 3.2 Response-Spectrum Analysis 27
   - 3.3 Displacement Demand 32

4. Displacement Capacity Analysis 34
   - 4.1 Hinge Definitions and Assignments 34
   - 4.2 Pushover Analysis 41

5. Code Requirements 66
   - 5.1 P-Δ Capacity Requirement Check 66
   - 5.2 Minimum Lateral Strength Check 67
   - 5.3 Structure Displacement Demand/Capacity Check 69
   - 5.4 Member Ductility Requirement Check 73
   - 5.5 Column Shear Demand/Capacity Check 79
   - 5.6 Balanced Stiffness and Frame Geometry Requirement Check 83

2. Model Setup

2.1 Overview of Model

This example employs SAP2000. The superstructure is modeled using frame elements for each of the girders and shell elements for the deck. Shell elements are also used to model the end, intermediate, and pier diaphragms. Non-prismatic frame sections are used to model the crossbeams since they have variable depth. The X-axis is along the bridge's longitudinal axis and the Z-axis is vertical. The units used for inputs into SAP2000 throughout this example are kip-in. The following summarizes the bridge being modeled:

- All spans are 145' in length
- (5) lines of prestressed concrete girders (WF74G) with 9'-6" ctc spacing
- 8" deck with 46'-11" to width
- Girders are continuous and fixed to the crossbeams at the intermediate piers
- (2) 5' diameter columns at bents
- Combined spread footings – 20'L x 40'W x 5'D at each bent
- Abutment longitudinal is free, transverse is fixed

Figure 2.1-1 shows a view of the model in SAP2000.

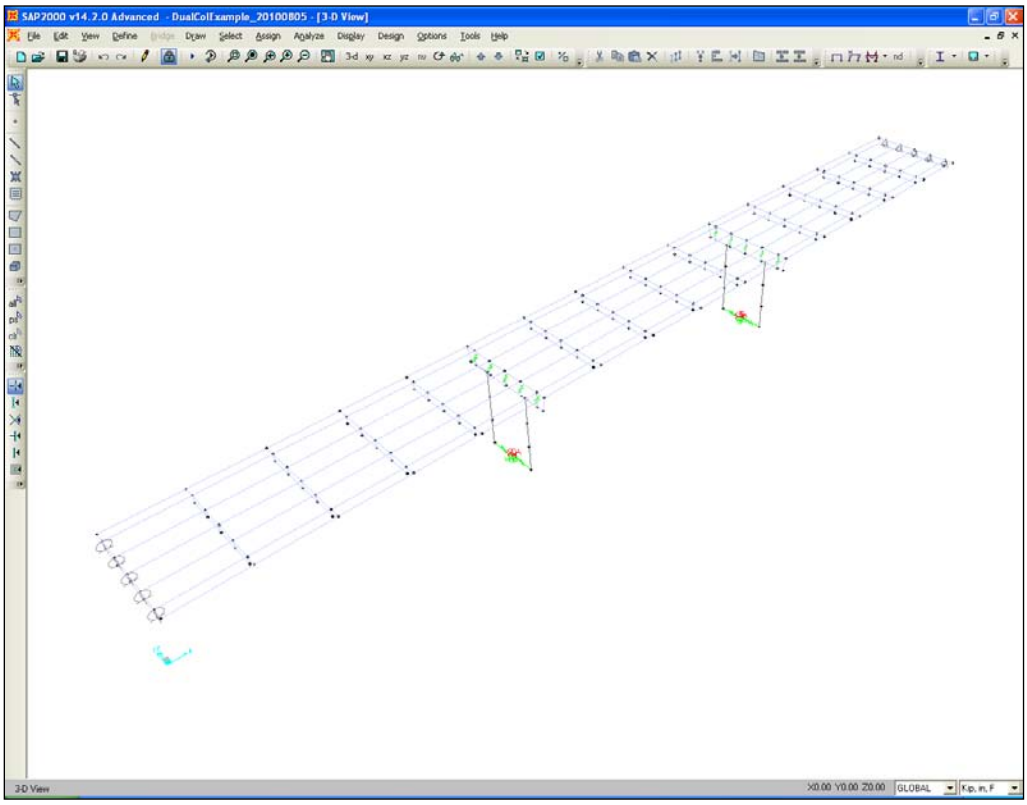

Wireframe 3-D View of Model
Figure 2.1-1

2.2 Foundations Modeling

2.2.1 Intermediate Piers

Each bent is supported by a combined spread footing that is 20'L x 40'W x 5'D. These footings are modeled using springs. Rigid links connect the bases of the columns to a center joint that the spring properties are assigned to as shown in Figure 2.2.1-1.

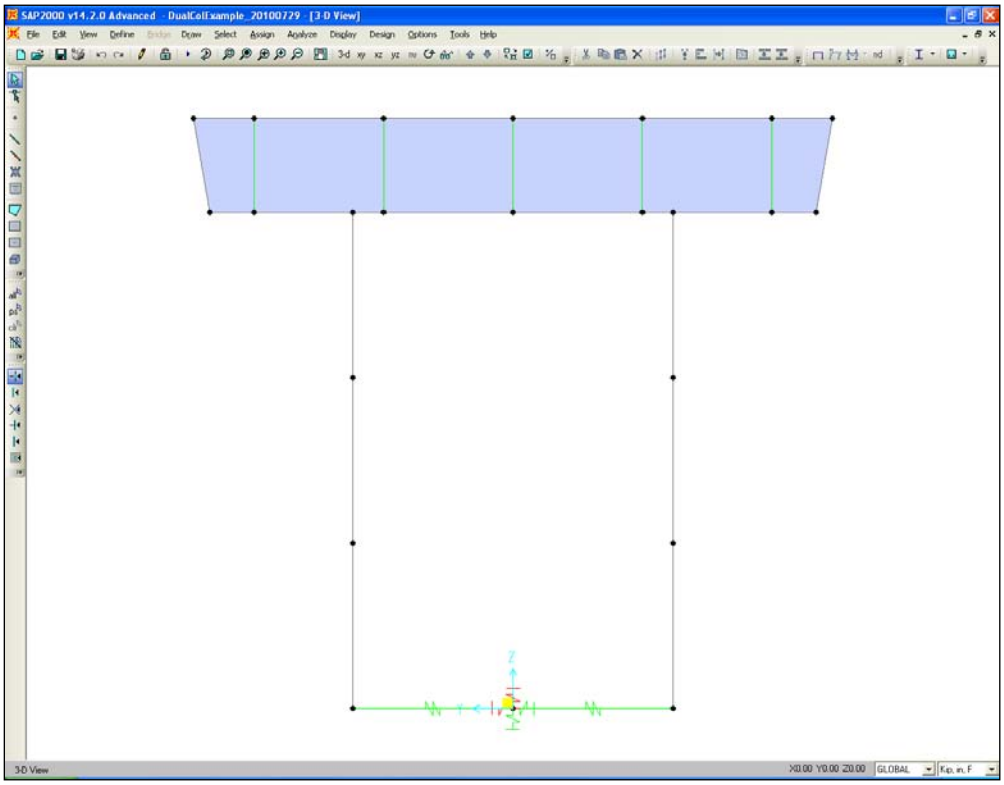

Wireframe 2-D View of Bent
Figure 2.2.1-1

The soil springs were generated using the method for spread footings outlined in Chapter 7 of the *Washington State Department of Transportation Bridge Design Manual*. The assumed soil parameters were G = 1,700 ksf and ν = 0.35. The spring values used in the model for the spread footings are shown in Table 2.2.1-1.

Degree of Freedom	Stiffness Value
UX	18,810 kip/in
UY	16,820 kip/in
UZ	18,000 kip/in
RX	1,030,000,000 kip-in/rad
RY	417,100,000 kip-in/rad
RZ	1,178,000,000 kip-in/rad

Joint Spring Values for Spread Footings
Table 2.2.1-1

Figure 2.2.1-2 shows the spread footing joint spring assignments (**Assign menu > Joint > Springs**).

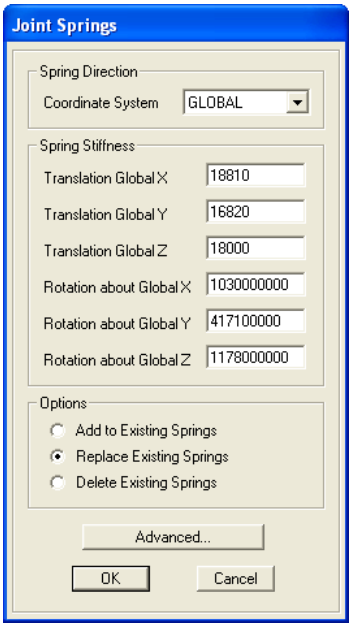

Spread Footing Joint Spring Assignments
Figure 2.2.1-2

The springs used in the demand model (response-spectrum model) are the same as the springs used in the capacity model (pushover model). It is also be acceptable to conservatively use fixed-base columns for the capacity model.

2.2.2 Abutments

The superstructure is modeled as being free in the longitudinal direction at the abutments in accordance with the policies outlined in the *Washington State Department of Transportation Bridge Design Manual*. The abutments are fixed in the transverse direction in this example for simplification. However, please note that the *AASHTO Guide Specifications for LRFD Seismic Bridge Design* require the stiffness of the transverse abutments be modeled. Since there are five girder lines instead of a spine element, the joints at the ends of the girders at the abutments all have joint restraints assigned to them. The girder joint restraint assignments at the abutments are listed in Table 2.2.2-1.

Degree of Freedom	Fixity
UX	Free
UY	Fixed
UZ	Fixed
RX	Free
RY	Free
RZ	Free

Joint Fixity for Girder Joints at Abutments
Table 2.2.2-1

Figure 2.2.2-1 shows the girder joint restraints at the abutments (**Assign menu > Joint > Restraints**).



Girder Joint Restraint Assignments at Abutments
Figure 2.2.2-1

2.3 Materials Modeling

SAP2000's default concrete material properties have elastic moduli based on concrete densities of 144 psf. The elastic moduli of the concrete materials used in this example are based on the Washington State Department of Transportation's policy on concrete densities to be used in the calculations of elastic moduli. Please see the current WSDOT *Bridge Design Manual* and *Bridge Design Memorandums*. In Version 14 of SAP2000, nonlinear material properties for Caltrans sections are no longer defined in Section Designer and are now defined in the material definitions themselves. Table 2.3-1 lists the material definitions used in the model and the elements they are applied to (**Define menu > Materials**).

Material Name	Material Type	Section Property Used For	Material Unit Weight (pcf) For Dead Load	Material Unit Weight (pcf) For Modulus of Elasticity
4000Psi-Deck	Concrete	Deck	155	150
4000Psi-Other	Concrete	Crossbeams & Diaphragms	150	145
5200Psi-Column	Concrete	Columns	150	145
7000Psi-Girder	Concrete	Girders	165	155
A706-Other	Rebar	Rebar Other Than Columns	490	-
A706-Column	Rebar	Column Rebar	490	-

Material Properties Used in Model
Table 2.3-1

The "5200Psi-Column" and "A706-Column" material definitions are created to define the expected, nonlinear properties of the column section.

The Material Property Data for the material "4000Psi-Deck" is shown in Figure 2.3-1 (**Define menu > Materials > *select* 4000Psi-Deck > *click* Modify/Show Material *button***).

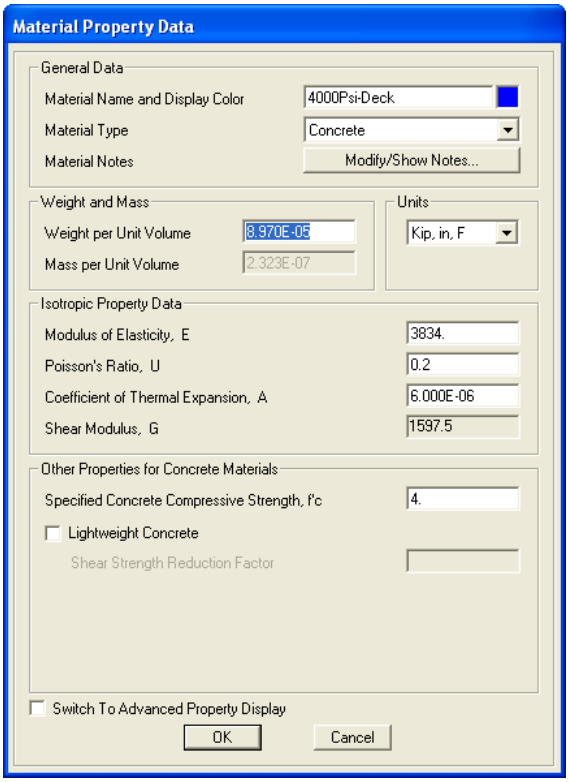

Material Property Data for Material "4000Psi-Deck"
Figure 2.3-1

The Material Property Data for the material "4000Psi-Other" is shown in Figure 2.3-2 (**Define menu > Materials >** ***select*** **4000Psi-Other >** ***click*** **Modify/Show Material** ***button***).

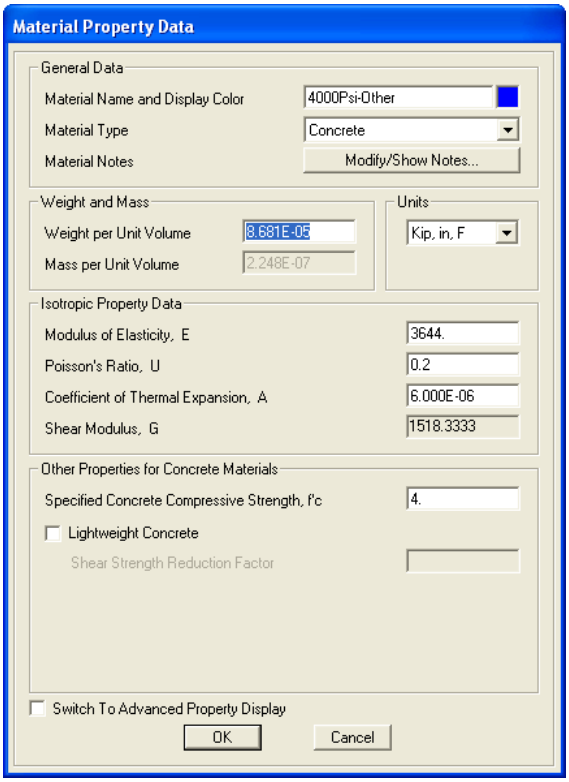

Material Property Data for Material "4000Psi-Other"
Figure 2.3-2

The Material Property Data for the material "7000Psi-Girder" is shown in Figure 2.3-3 (**Define menu > Materials >** ***select*** **7000Psi-Girder >** ***click*** **Modify/Show Material** ***button***).

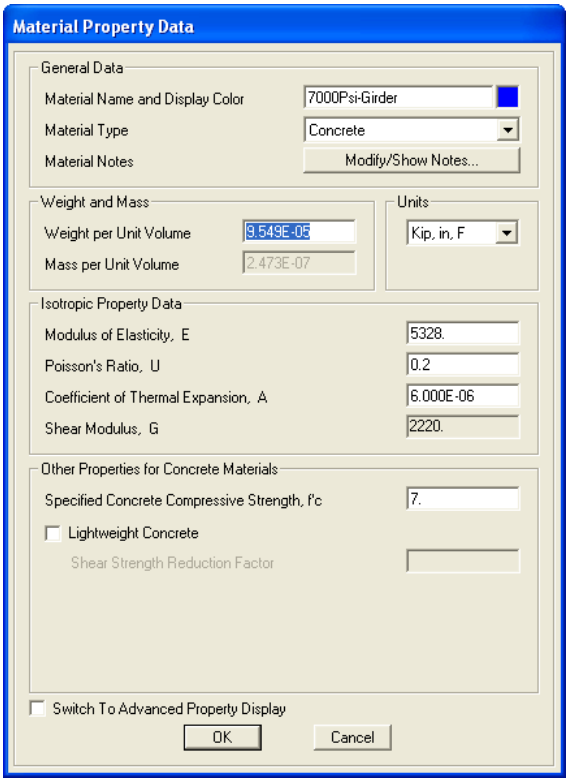

Material Property Data for Material "7000Psi-Girder"
Figure 2.3-3

The Material Property Data for the material "5200Psi-Column" is shown Figure 2.3-4 (**Define menu > Materials >** ***select*** **5200Psi-Column >** ***click*** **Modify/Show Material** ***button***).

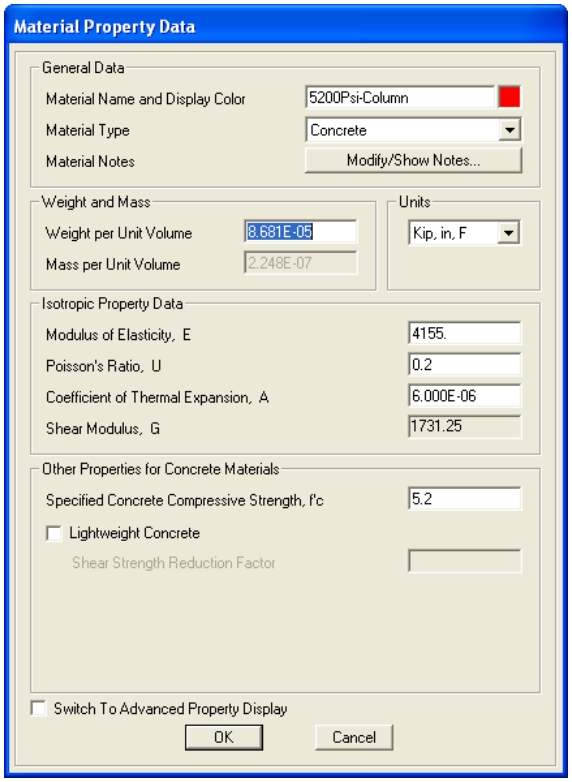

Material Property Data for Material "5200Psi-Column"
Figure 2.3-4

When the **Switch To Advanced Property Display** box shown in Figure 2.3-4 is checked , the window shown in Figure 2.3-5 opens.

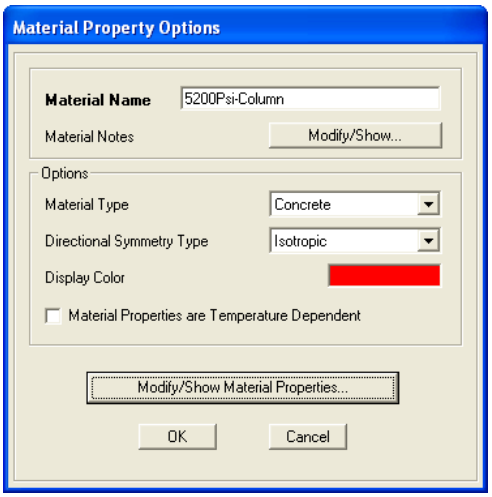

Advanced Material Property Options for Material "5200Psi-Column"
Figure 2.3-5

By clicking the **Modify/Show Material Properties** button in Figure 2.3-5, the window shown in Figure 2.3-6 opens.

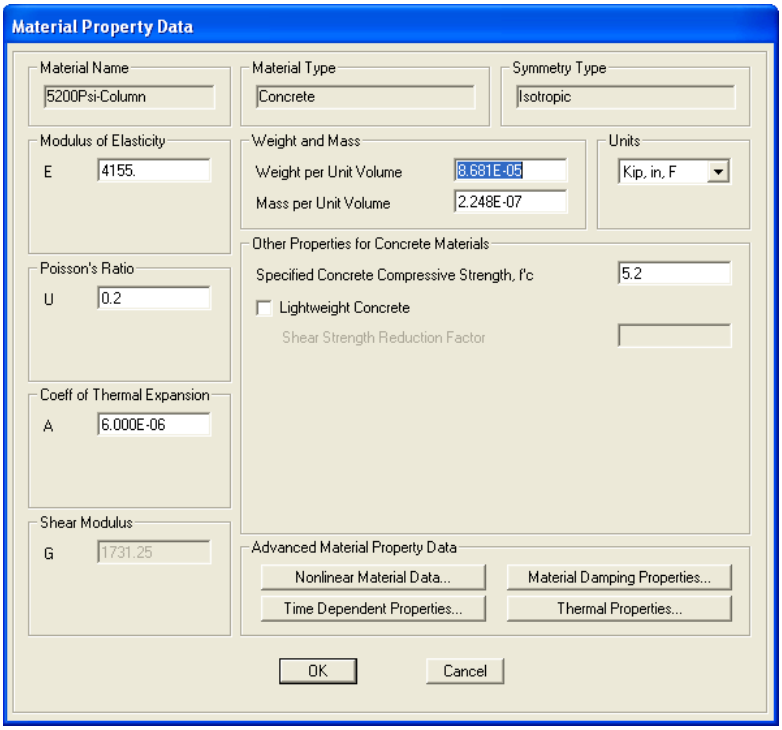

Advanced Material Property Data for Material "5200Psi-Column"
Figure 2.3-6

By clicking the **Nonlinear Material Data** button in Figure 2.3-6, the window shown in Figure 2.3-7 opens.

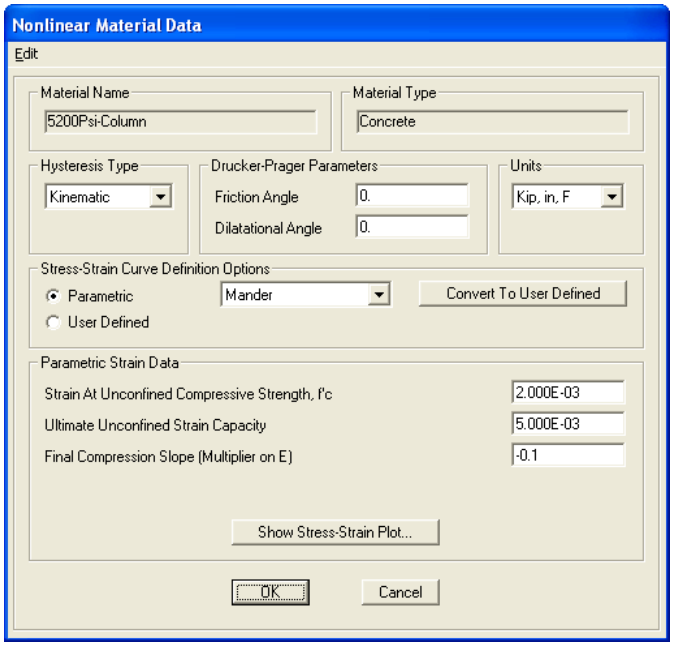

Nonlinear Material Data for Material "5200Psi-Column"
Figure 2.3-7

Note that in Figure 2.3-7 the *Strain At Unconfined Compressive Strength, f'c* and the *Ultimate Unconfined Strain Capacity* are set to the values required in Section 8.4.4 of the *AASHTO Guide Specifications for LRFD Seismic Bridge Design*. These unconfined properties are parameters used in defining the Mander confined concrete stress-strain curve of the column core. It is seen

that under the *Stress-Strain Definition Options*, **Mander** is selected. By clicking the **Show Stress-Strain Plot** button in Figure 2.3-7, a plot similar to that shown Figure 2.3-8 is displayed.

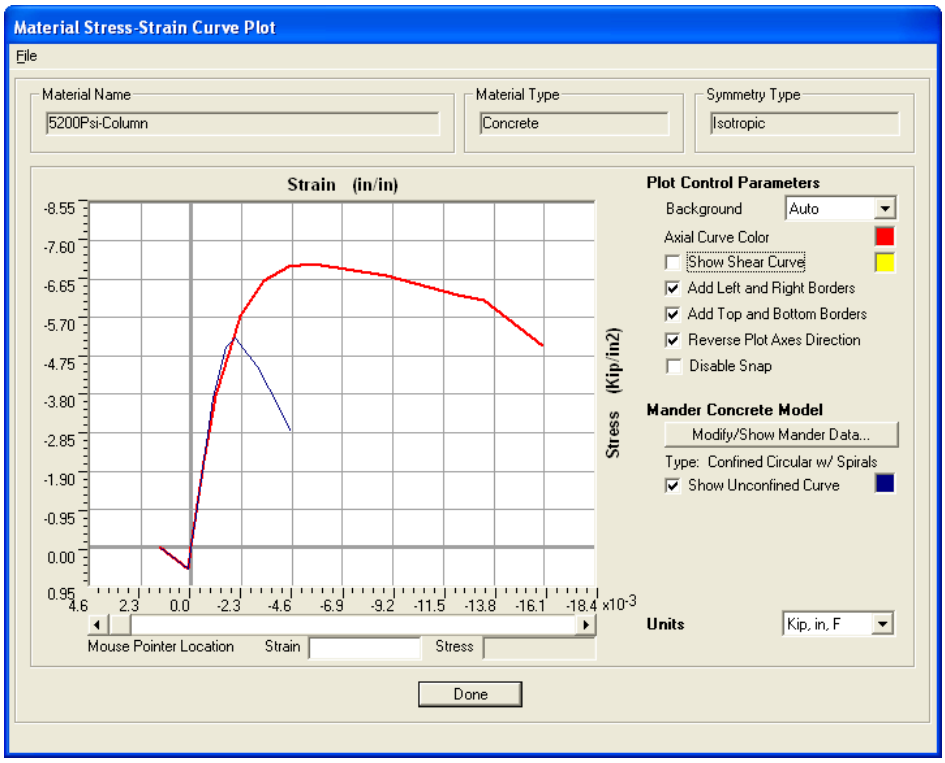

Material Stress-Strain Curve Plot for Material "5200Psi-Column"
Figure 2.3-8

Figure 2.3-8 shows both the confined and unconfined nonlinear stress-strain relationships. The user should verify that the concrete stress-strain curves are as expected.

The Material Property Data for the material "A706-Other" is shown in Figure 2.3-9 (**Define menu > Materials >** ***select*** **A706-Other >** ***click*** **Modify/Show Material** ***button***).

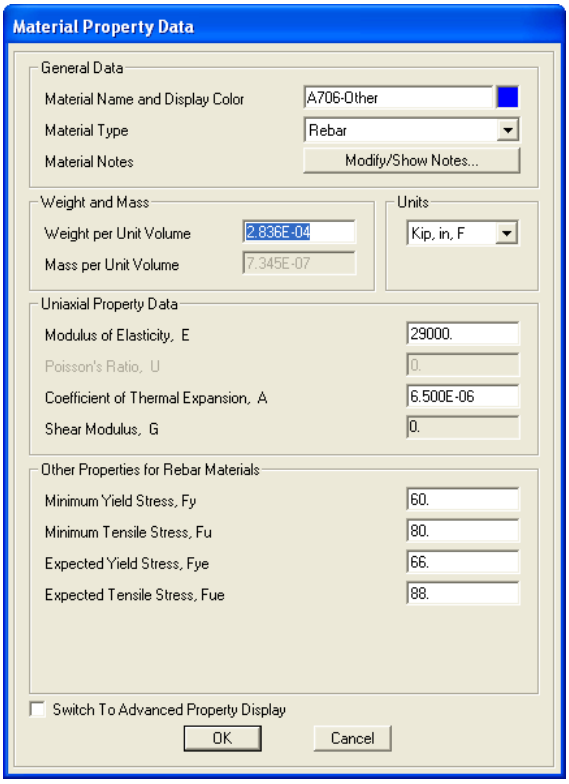

Material Property Data for Material "A706-Other"
Figure 2.3-9

The Material Property Data for the material "A706-Column" is shown in Figure 2.3-10 (**Define menu > Materials >** ***select*** **A706-Column >** ***click*** **Modify/Show Material** ***button***).

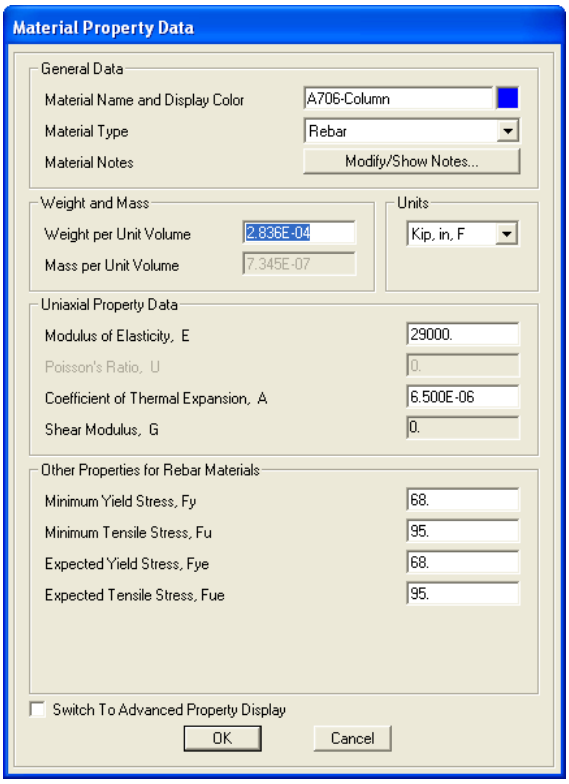

Material Property Data for Material "A706-Column"
Figure 2.3-10

When the **Switch To Advanced Property Display** box in Figure 2.3-10 is checked, the window shown in Figure 2.3-11 opens.

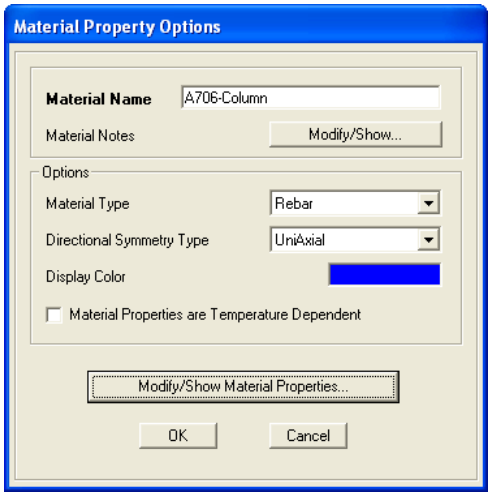

Advanced Material Property Options for Material "A706-Column"
Figure 2.3-11

By clicking the **Modify/Show Material Properties** button in Figure 2.3-11, the window shown in Figure 2.3-12 opens.

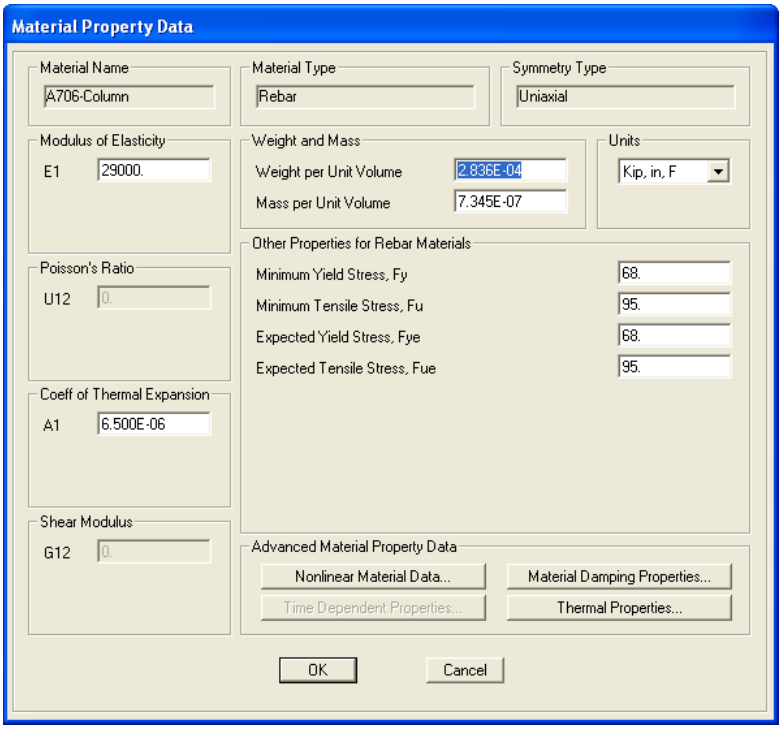

Advanced Material Property Data for Material "A706-Column"
Figure 2.3-12

In Figure 2.3-12, the *Minimum Yield Stress, Fy* = **68** ksi and the *Minimum Tensile Stress, Fu* = **95** ksi as required per Table 8.4.2-1 of the *AASHTO Guide Specifications for LRFD Seismic Bridge Design*. SAP2000 uses F_y and F_u instead of F_{ye} and F_{ue} to generate the nonlinear stress-strain curve. Therefore, the F_{ye} and F_{ue} inputs in SAP2000 do not serve a purpose for this analysis. By clicking the **Nonlinear Material Data** button in Figure 2.3-12, the window shown in Figure 2.3-13 opens.

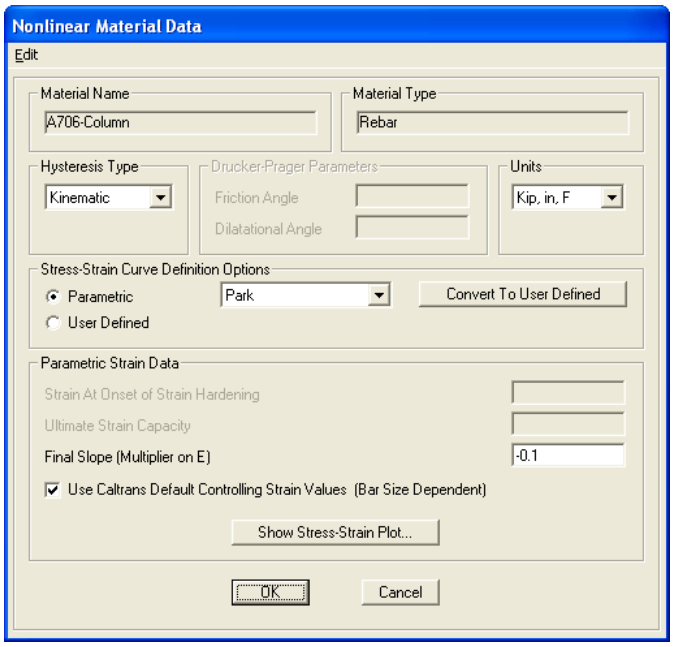

Nonlinear Material Data for Material "A706-Column"
Figure 2.3-13

In Figure 2.3-13, it is seen that under the *Stress-Strain Curve Definitions Options*, **Park** is selected. Also the box for *Use Caltrans Default Controlling Strain Values* is checked. By clicking the **Show Stress-Strain Plot** button in Figure 2.3-13 the plot shown in Figure 2.3-14 is displayed.

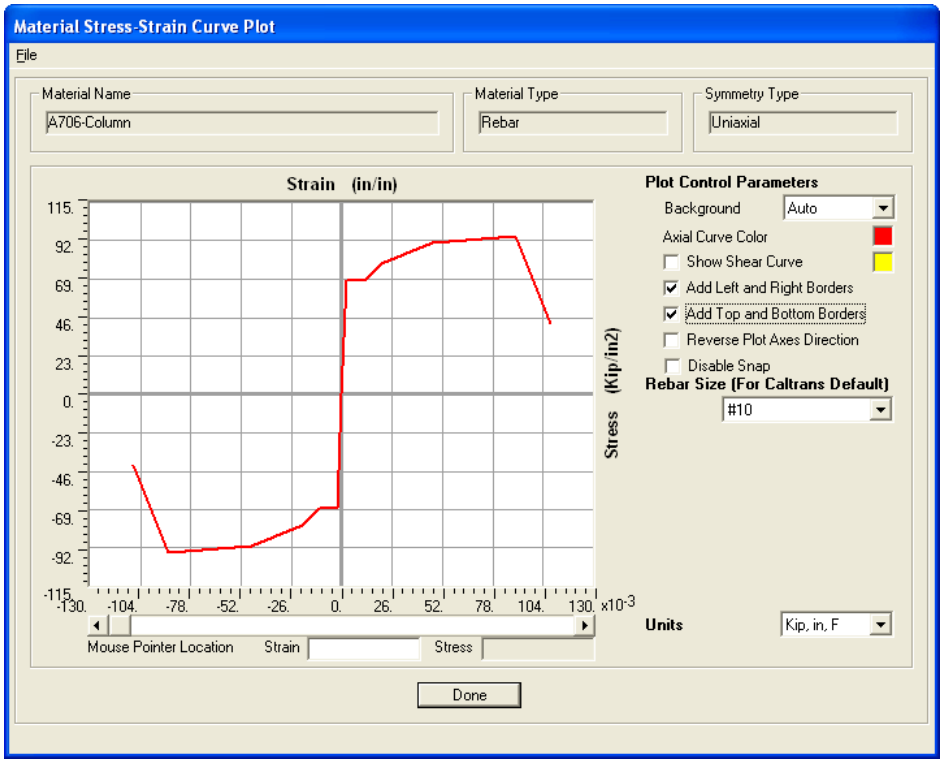

Material Stress-Strain Curve Plot for Material "A706-Column"
Figure 2.3-14

In Figure 2.3-14, the strain at which the stress begins to decrease is ε^{R}_{su}, which the user should verify for correctness.

2.4 Column Modeling

There are two columns at each bent. The columns are five feet in diameter and have (24) #10 bars for longitudinal steel, which amounts to a steel-concrete area ratio of about 1%. In the hinge zones, the columns have confinement steel consisting of #6 spiral bars with a 3.5 inch spacing.

The column elements have rigid end offsets assigned to them at the footings and crossbeams. The net clear height of the columns is 29'-2". The columns are split into three frame elements. Section 5.4.3 of the *AASHTO Guide Specifications for LRFD Seismic Bridge Design* requires that columns be split into a minimum of three elements.

Figure 2.4-1 shows the frame section property definition for the column elements (**Define menu > Section Properties > Frame Sections > *select* COL > *click* Modify/Show Property *button***).

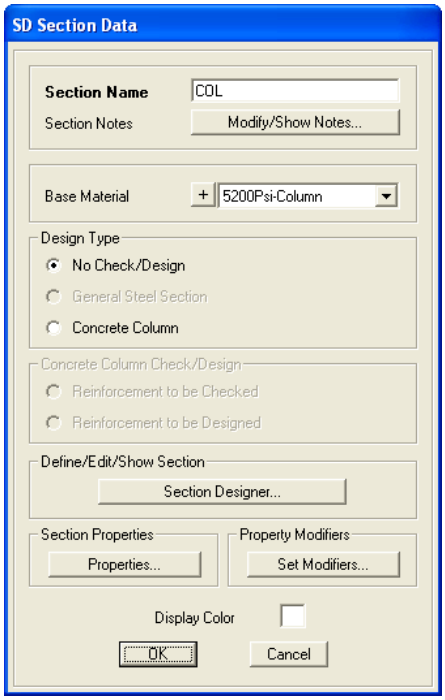

Frame Section Property Definition for Frame Section "COL"
Figure 2.4-1

By clicking the **Section Designer** button in Figure 2.4-1, the window shown in Figure 2.4-2 opens. The "COL" frame section is defined using a round Caltrans shape in Section Designer as shown in Figure 2.4-2.

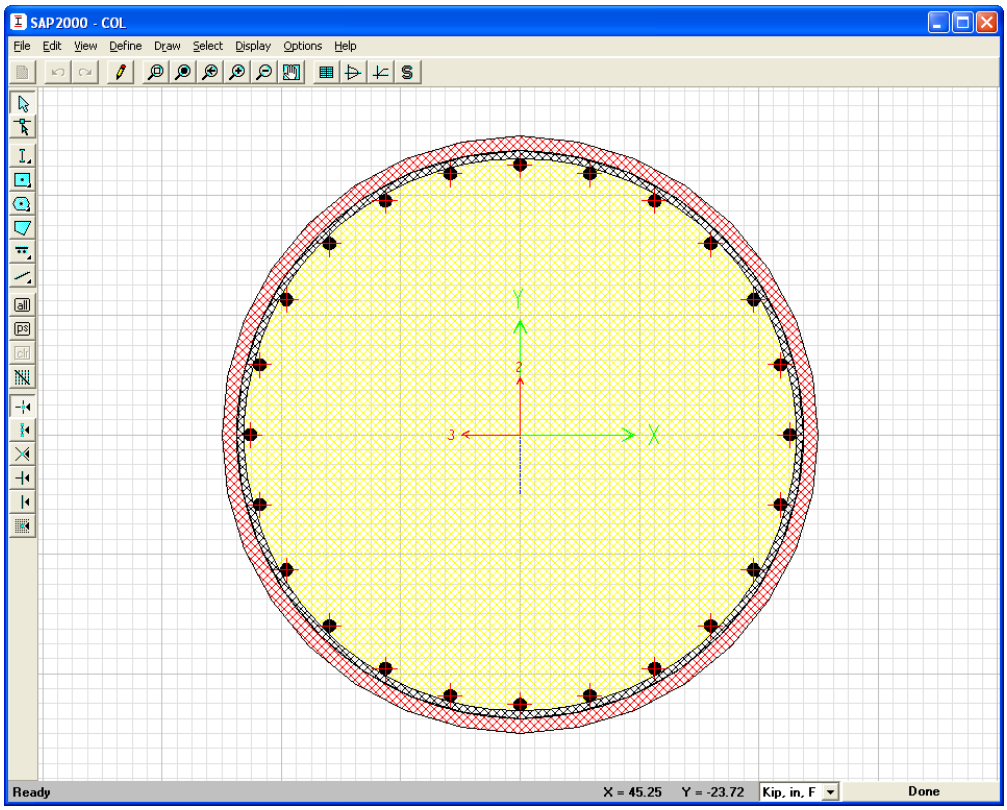

Section Designer View of Frame Section "COL"
Figure 2.4-2

By right-clicking on the section shown in Figure 2.4-2, the window shown in Figure 2.4-3 opens. Figure 2.4-3 shows the parameter input window for the Caltrans shape is shown in Figure 2.4-2.

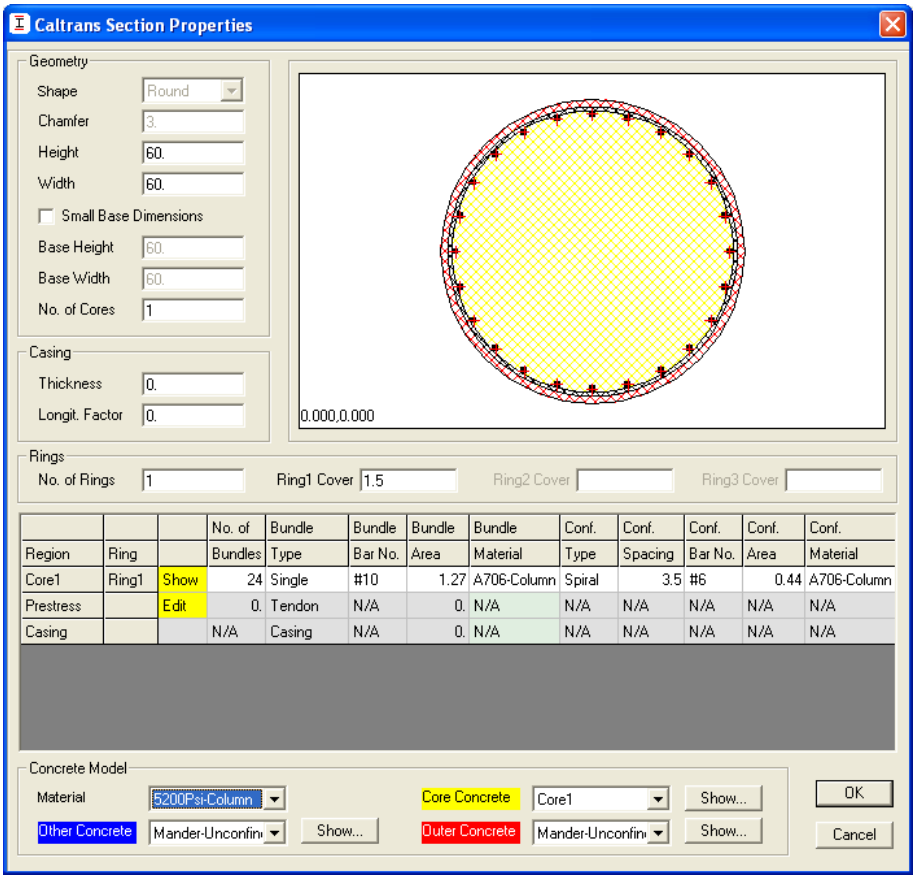

Caltrans Section Properties for Frame Section "COL"
Figure 2.4-3

By clicking the **Show** button for the *Core Concrete* in Figure 2.4-3, the window shown in Figure 2.4-4 opens.

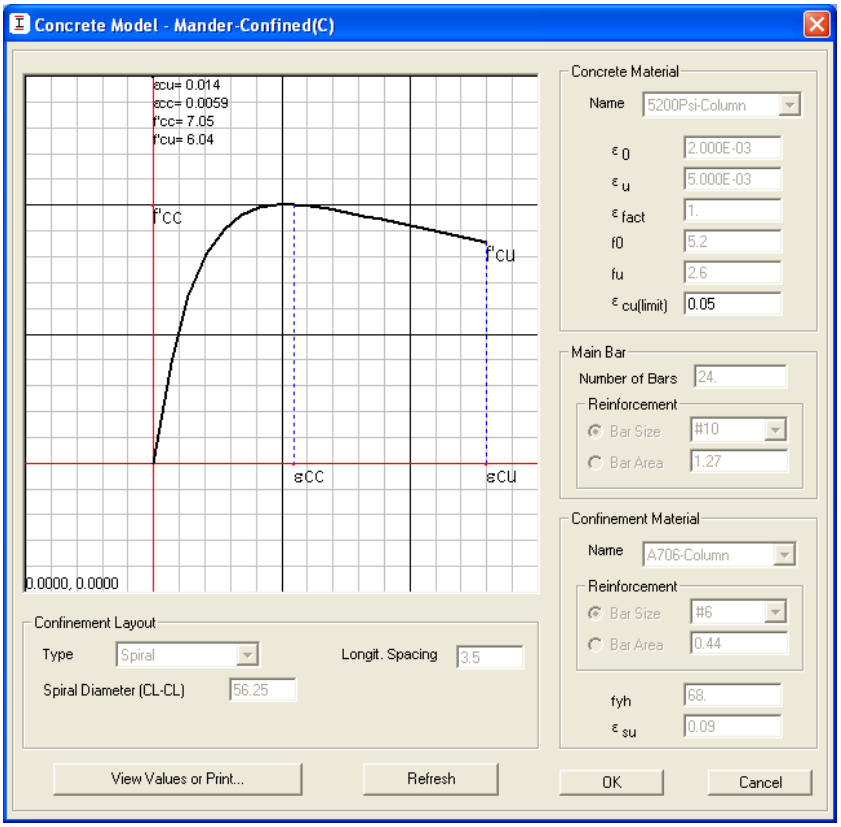

Concrete Model for Core of Frame Section "COL"
Figure 2.4-4

Figure 2.4-4 shows the Mander confined stress-strain concrete model for the core of the column. The user should verify that the concrete stress-strain curve is as expected.

2.5 Crossbeam Modeling

The crossbeams are modeled as frame elements with non-prismatic section properties due to the variable depth of the sections (**Define menu > Section Properties > Frame Sections**). The crossbeam elements have their insertion points set to the top center (**Assign menu > Frame > Insertion Point**). The pier diaphragm above the crossbeam is modeled with shell elements. An extruded view of the bent is shown in Figure 2.5-1.

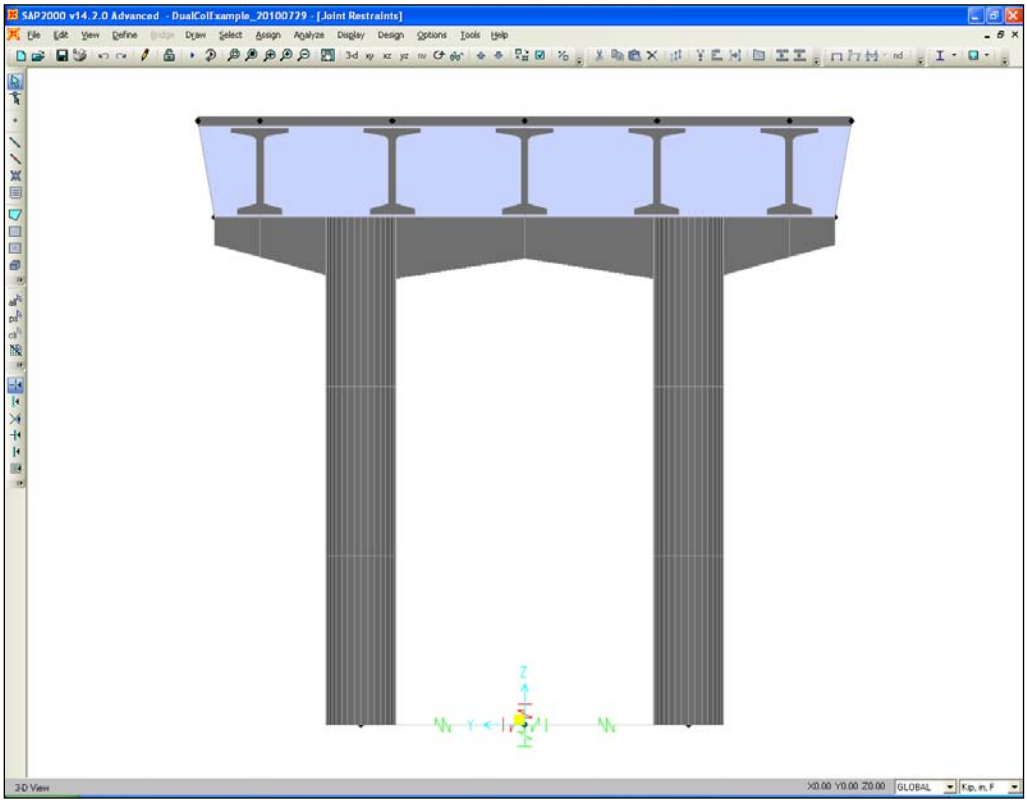

Extruded 2-D View of Bent
Figure 2.5-1

2.6 Superstructure Modeling

The girders are Washington State Department of Transportation WF74Gs. The frame section definition for section "WF74G" is shown in Figure 2.6-1 (**Define menu > Section Properties > Frame Sections >** ***select*** **WF74G >** ***click*** **Modify/Show Property** ***button***).

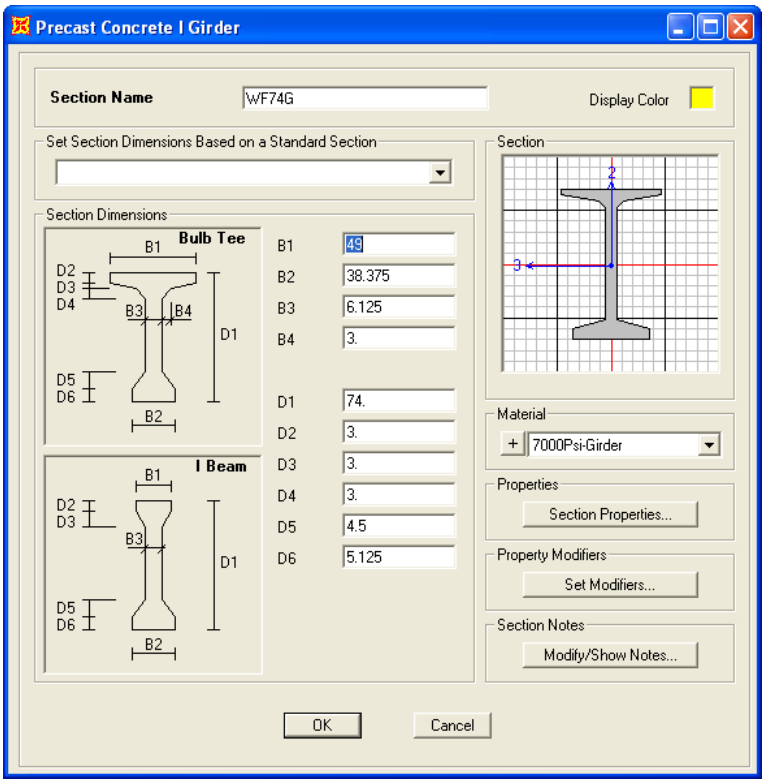

Frame Section Parameter Input for Frame Section "WF74G"
Figure 2.6-1

The girders are assigned insertion points such that they connect to the same joints as the deck elements but are below the deck. Since the deck is 8 inches thick and the gap between the top of the girder and the soffit of the deck is 3 inches, the insertion point is 7 inches (8 in./2 +3 in.) above the top of the girder. Figure 2.6-2 shows the girder frame element insertion point assignments (**Assign menu > Frame > Insertion Point**).

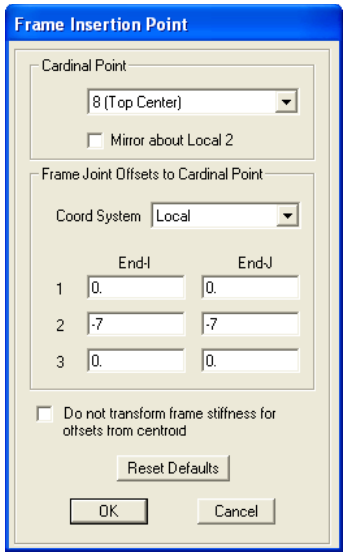

Girder Frame Element Insertion Point Assignments
Figure 2.6-2

Links connect the girders to the crossbeams which models the fixed connection between these elements. See the screen shot shown in Figure 2.6-3.

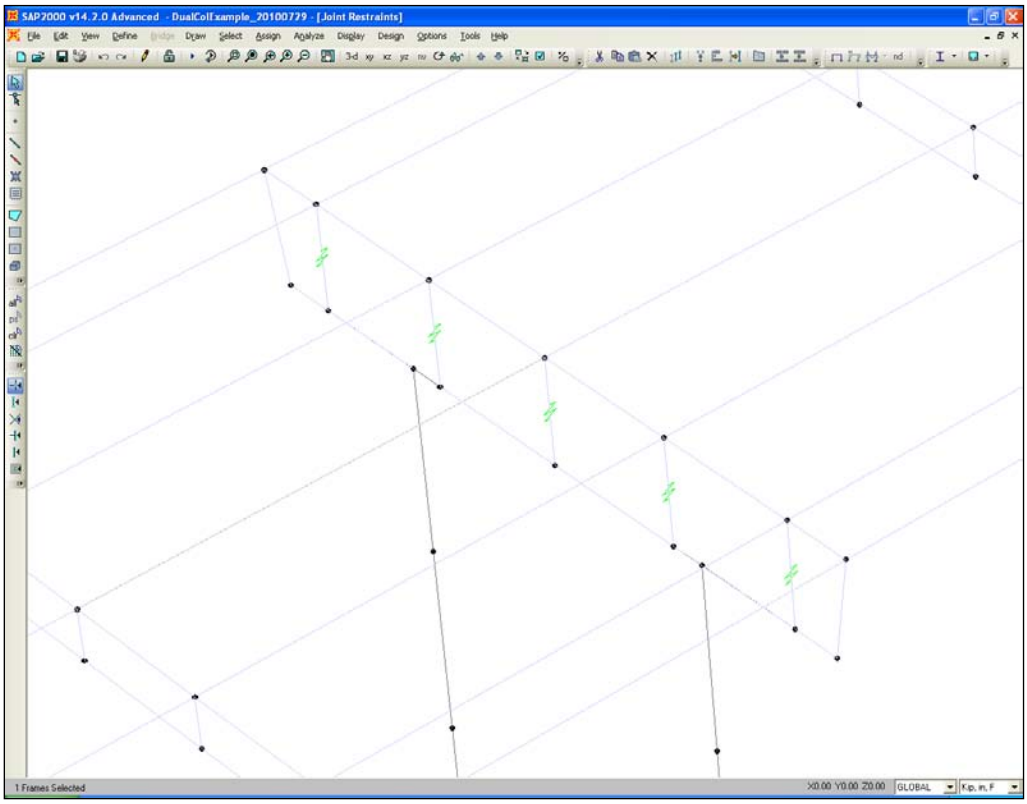

Wireframe 3-D View of Bent and Superstructure Intersection
Figure 2.6-3

The superstructure is broken into five segments per span. Section 5.4.3 of the *AASHTO Guide Specifications for LRFD Seismic Bridge Design* requires that a minimum of four segments per span be used.

2.7 Gravity Load Patterns

There are three dead load patterns in the model: “DC-Structure”, “DC-Barriers”, and “DW-Overlay”. The “DC-Structure” case includes the self weight of the structural components. The “DC-Barriers” case includes the dead load of the barriers, which is applied as an area load to the outermost deck shells. The “DW-Overlay” case includes the future overlay loads applied to the deck shells. The dead load pattern definitions are shown Figure 2.7-1 (**Define menu > Load Patterns**).

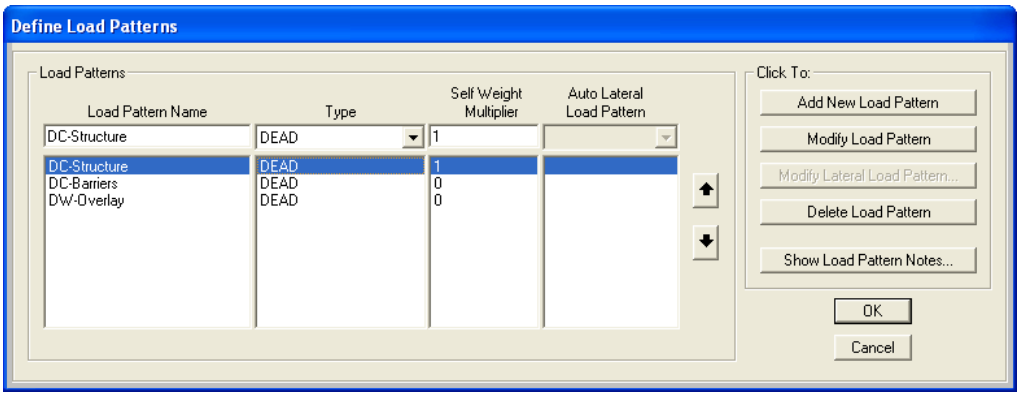

Dead Load Pattern Definitions
Figure 2.7-1

The designer should verify the weight of the structure in the model with hand calculations.

3. Displacement Demand Analysis

3.1 Modal Analysis

3.1.1 Mass Source

All of the dead loads are considered as contributing mass for the modal load case. A display of the mass source definition window from SAP2000 is shown in Figure 3.1.1-1 (**Define menu > Mass Source**).

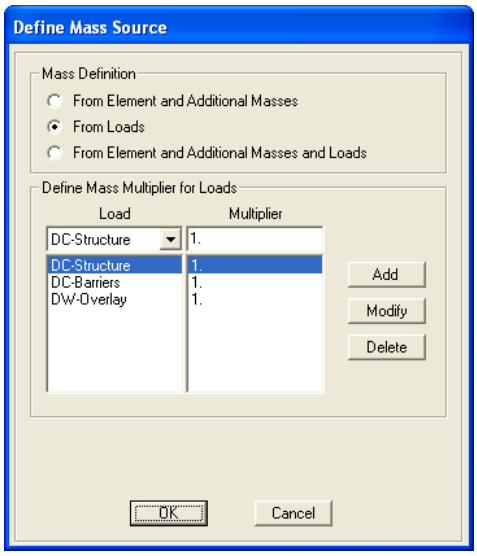

Mass Source Definition
Figure 3.1.1-1

3.1.2 Cracking of Columns

Section 5.6 of the *AASHTO Guide Specifications for LRFD Seismic Bridge Design* provides diagrams that can be used to determine the cracked section properties of the columns. However, SAP2000's Section Designer can be used to compute the effective section properties. If using Section Designer, the designer should verify that the method of calculation conforms to *AASHTO Guide Specifications of LRFD Seismic Bridge Design*. The column axial dead load at mid-height is approximately 1,250 kips without including the effects of the construction staging. For the bridge in this example, the inclusion of staging effects would cause the axial load in the columns to vary by less than ten percent. Such a small change in axial load would not significantly alter the results of this analysis. However, there are situations where the inclusion of construction sequence effects will significantly alter the analysis. Therefore, engineering judgment should be used when decided whether or not to include the effects of staging. By having Section Designer perform a moment-curvature analysis on the column section with an axial load of 1,250 kips, it is found that ICrack = 212,907 inch^4. The gross moment of inertia is 628,044 inch^4 (as calculated by SAP2000). Therefore, the ratio is 212,907/628,044 = 0.34. The moment-curvature analysis is shown in Figure 3.1.2-1 (**Define menu > Section Properties > Frame Sections > *select* COL > *click* Modify/Show Property *button* > *click* Section Designer *button* > Display menu > Show Moment-Curvature Curve**).

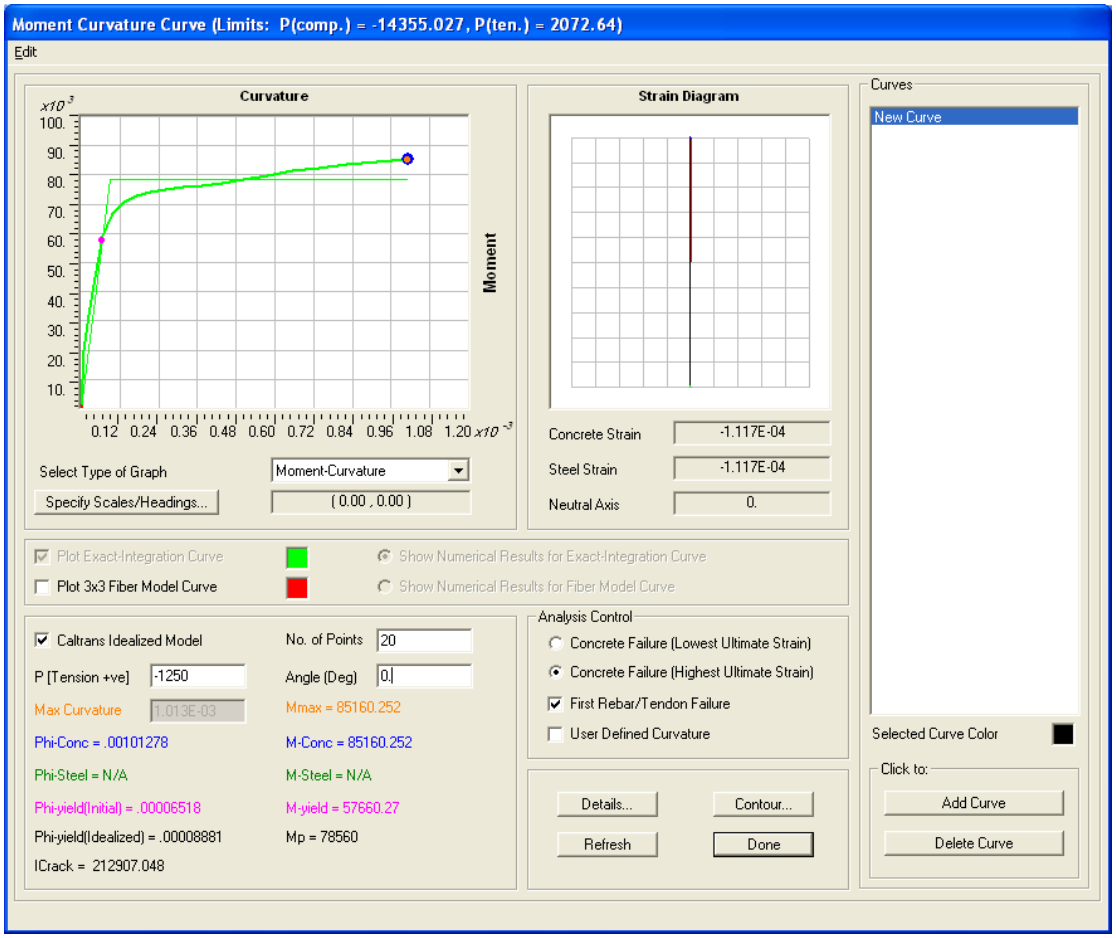

Moment Curvature Curve for Frame Section "COL" at P = -1250 kips
Figure 3.1.2-1

It can be seen in Figure 3.1.2-1 that concrete strain capacity limits the available plastic curvature. Designers should verify that SAP2000's bilinearization is acceptable. The property modifiers are then applied to the column frame elements as shown in Figure 3.1.2-2 (**Assign menu > Frame > Property Modifiers**).

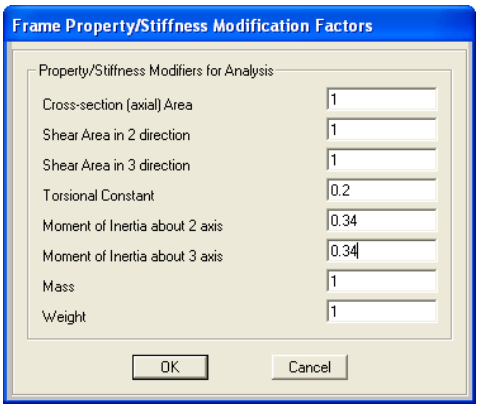

Frame Property Modification Factor for Column Frame Elements
Figure 3.1.2-2

The torsional constant modifier is 0.2 for columns as required by Section 5.6.5 of the *AASHTO Guide Specifications for LRFD Seismic Bridge Design*.

3.1.3 Load Case Setup

The "MODAL" load case uses Ritz vectors and is defined in SAP2000 as shown in Figure 3.1.3-1 (**Define menu > Load Cases > *select* MODAL > *click* Modify/Show Load Case *button***).

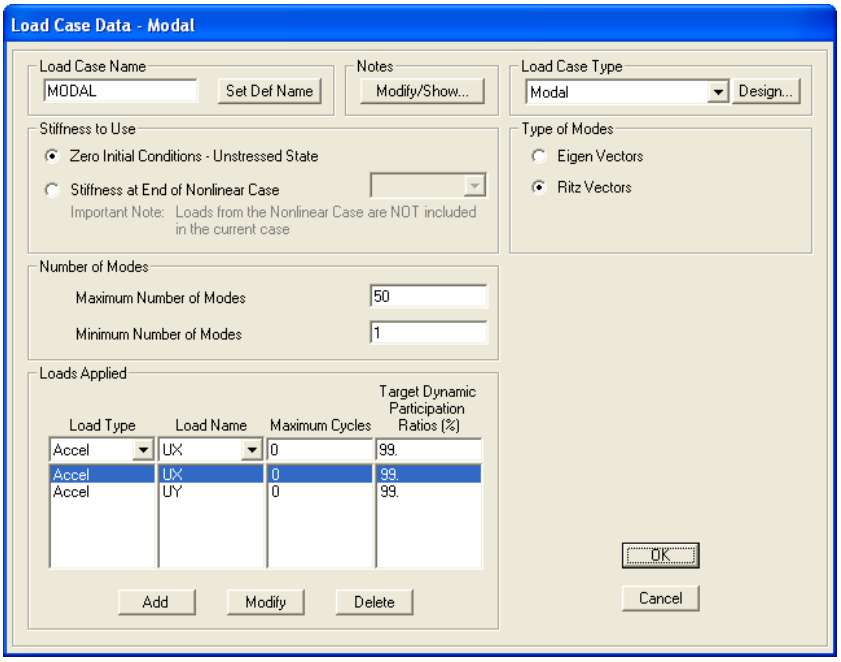

Load Case Data for Load Case "MODAL"
Figure 3.1.3-1

3.1.4 Verification of Mass Participation

Section 5.4.3 of the *AASHTO Guide Specifications for LRFD Seismic Bridge Design* requires a minimum of 90% mass participation in both directions. For this example, the mass is considered to be the same in both directions even though the end diaphragms are free in the longitudinal direction and restrained in the transverse direction. By displaying the *Modal Participating Mass Ratios* table for the "MODAL" load case it is found that the X-direction (longitudinal) reaches greater than 90% mass participation on the first mode shape, while the Y-direction (transverse) reaches greater than 90% mass participation by the seventeenth mode shape. This implies that the minimum code requirements could be met by including only seventeen mode shapes. The *Modal Participating Mass Ratios* table is shown in Figure 3.1.4-1 (**Display menu > Show Tables > *check* Modal Participating Mass Ratios > *click* OK *button***).

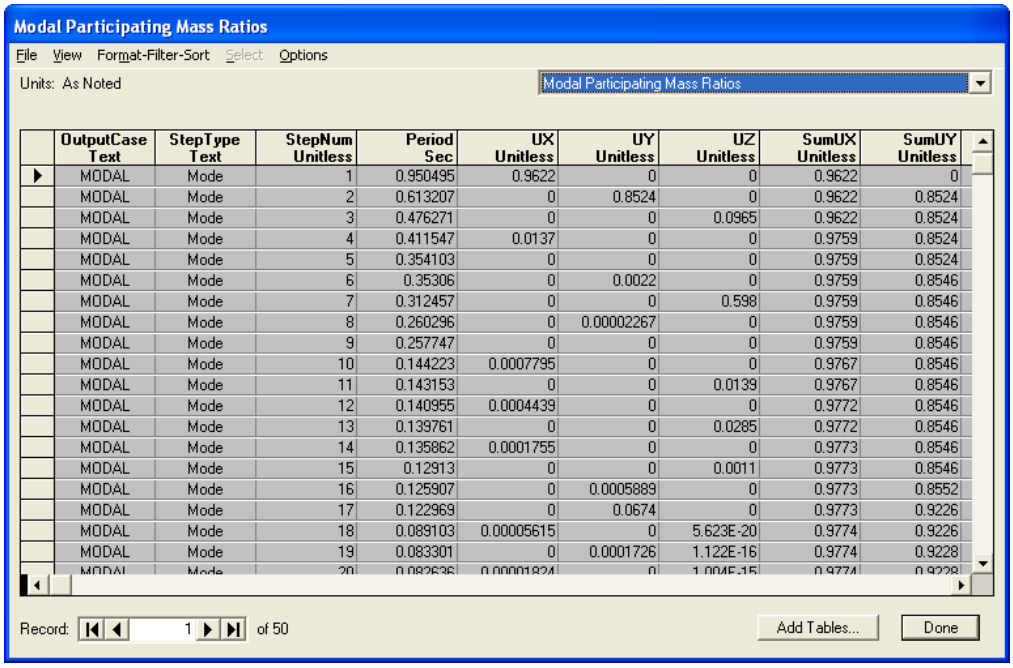

Modal Participating Mass Ratios

File View Format-Filter-Sort Select Options

Units: As Noted — Modal Participating Mass Ratios

OutputCase Text	StepType Text	StepNum Unitless	Period Sec	UX Unitless	UY Unitless	UZ Unitless	SumUX Unitless	SumUY Unitless
MODAL	Mode	1	0.950495	0.9622	0	0	0.9622	0
MODAL	Mode	2	0.613207	0	0.8524	0	0.9622	0.8524
MODAL	Mode	3	0.476271	0	0	0.0965	0.9622	0.8524
MODAL	Mode	4	0.411547	0.0137	0	0	0.9759	0.8524
MODAL	Mode	5	0.354103	0	0	0	0.9759	0.8524
MODAL	Mode	6	0.35306	0	0.0022	0	0.9759	0.8546
MODAL	Mode	7	0.312457	0	0	0.598	0.9759	0.8546
MODAL	Mode	8	0.260296	0	0.00002267	0	0.9759	0.8546
MODAL	Mode	9	0.257747	0	0	0	0.9759	0.8546
MODAL	Mode	10	0.144223	0.0007795	0	0	0.9767	0.8546
MODAL	Mode	11	0.143153	0	0	0.0139	0.9767	0.8546
MODAL	Mode	12	0.140955	0.0004439	0	0	0.9772	0.8546
MODAL	Mode	13	0.139761	0	0	0.0285	0.9772	0.8546
MODAL	Mode	14	0.135862	0.0001755	0	0	0.9773	0.8546
MODAL	Mode	15	0.12913	0	0	0.0011	0.9773	0.8546
MODAL	Mode	16	0.125907	0	0.0005889	0	0.9773	0.8552
MODAL	Mode	17	0.122969	0	0.0674	0	0.9773	0.9226
MODAL	Mode	18	0.089103	0.00005615	0	5.623E-20	0.9774	0.9226
MODAL	Mode	19	0.083301	0	0.0001726	1.122E-16	0.9774	0.9228
MODAL	Mode	20	0.082636	0.00001824	0	1.004E-15	0.9774	0.9228

Record: 1 of 50 Add Tables... Done

Modal Participating Mass Ratios for Load Case "MODAL"
Figure 3.1.4-1

Figure 3.1.4-1 also shows that the first mode in the X-direction (longitudinal) has a period of 0.95 seconds and the first mode in the Y-direction (transverse) has period of 0.61 seconds. The designer should verify fundamental periods with hand calculations. The designer should also visually review the primary mode shapes to verify they represent realistic behavior.

3.2 Response-Spectrum Analysis

3.2.1 Seismic Hazard

The bridge is located in Redmond, Wash. The mapped spectral acceleration coefficients are:

PGA = 0.396 g
S_s = 0.883 g
S_1 = 0.294 g

A site class of E is assumed for this example and the site coefficients are:

F_{PGA} = 0.91
F_a = 1.04
F_v = 2.82

Therefore, the response-spectrum is generated using the following parameters:

$A_s = F_{PGA}*PGA = 0.361$ g
$S_{DS} = F_a*S_s = 0.919$ g
$S_{D1} = F_v*S_1 = 0.830$ g

Since S_{D1} is greater than or equal to 0.50, per Table 3.5-1 of the *AASHTO Guide Specifications for LRFD Seismic Bridge Design* the Seismic Design Category is D.

3.2.2 Response-Spectrum Input

The spectrum is defined from a file created using the AASHTO Earthquake Ground Motion Parameters tool. A screen shot of the response-spectrum as inputted in SAP2000 is shown in Figure 3.2.2-1 (**Define menu > Functions > Response Spectrum > *select* SC-E > *click* Show Spectrum *button***).

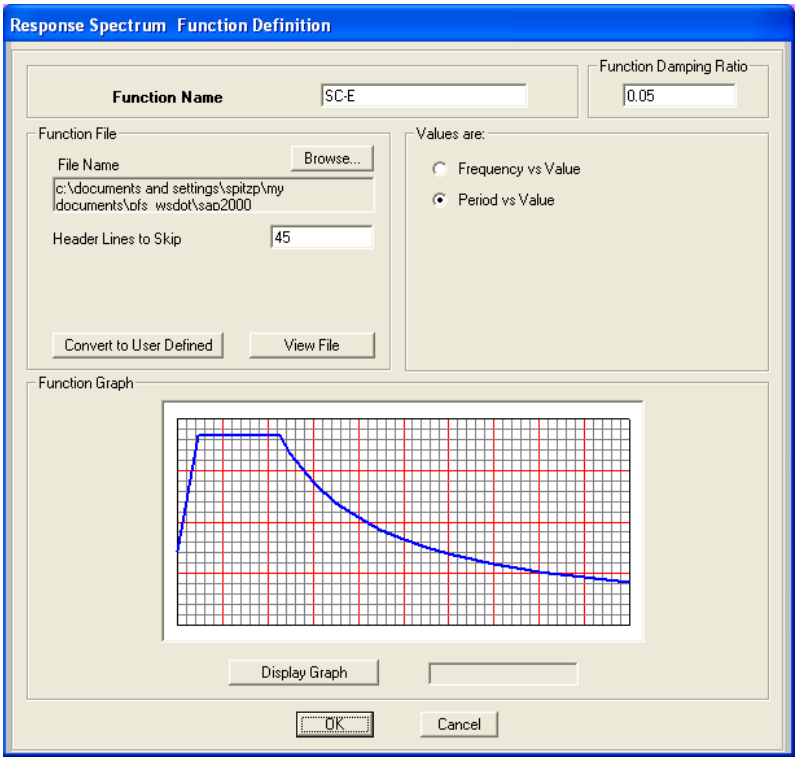

Response Spectrum Function Definition from File for Function "SC-E"
Figure 3.2.2-1

When the **Convert to User Defined** button is clicked, the function appears as shown in Figure 3.2.2-2.

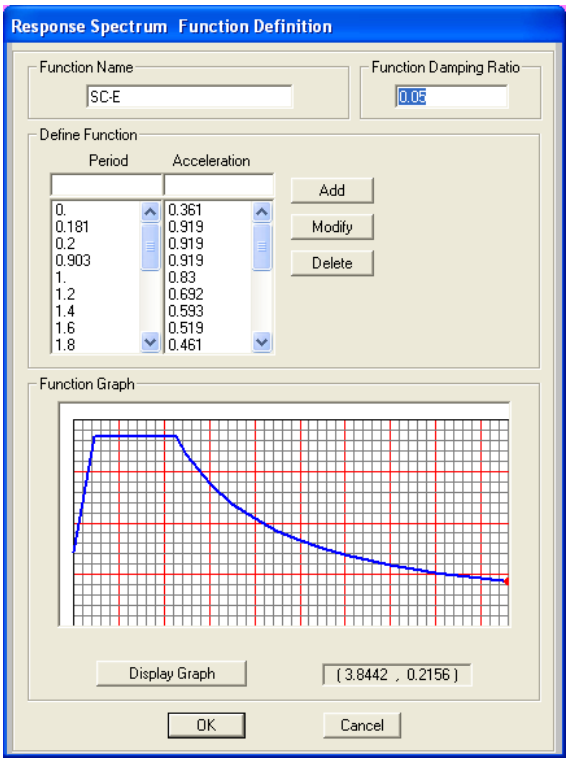

Response Spectrum Function Definition for Function "SC-E"
Figure 3.2.2-2

Having the response-spectrum function stored as "User Defined" is advantageous because the data is stored within the .SDB file. Therefore, if the .SDB file is transferred to a different location (different computer), the response-spectrum function will also be moved.

3.2.3 Load Case Setup

Two response-spectrum analysis cases are setup in SAP2000: one for each orthogonal direction.

3.2.3.1 Longitudinal Direction

The load case data for the X-direction is shown in Figure 3.2.3.1-1 (**Define menu > Load Cases > *select* EX > *click* Modify/Show Load Case *button***).

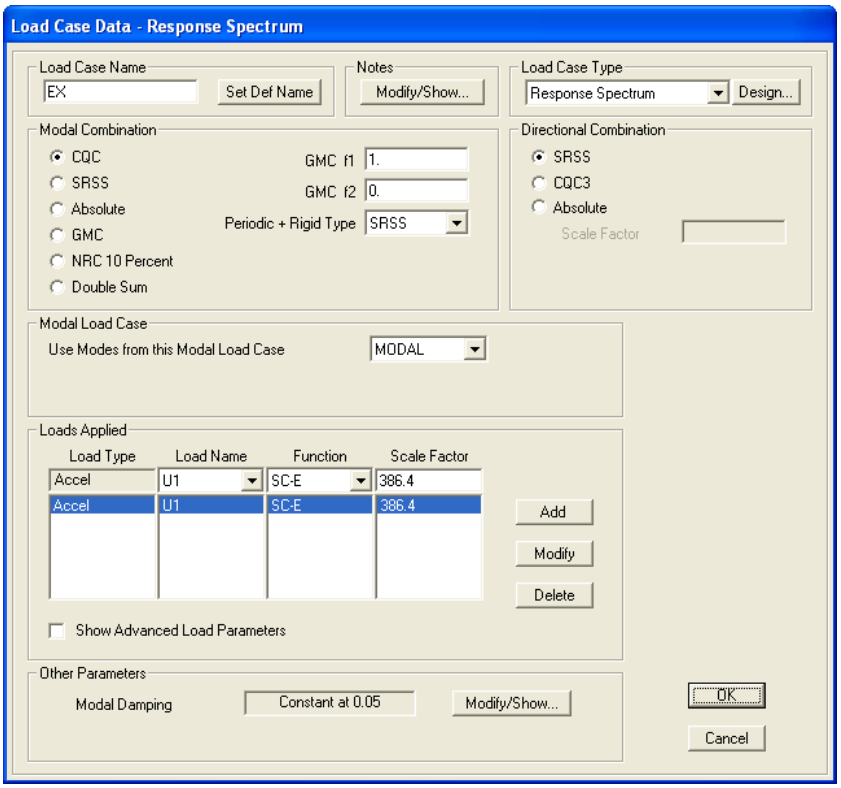

Load Case Data for Load Case "EX"
Figure 3.2.3.1-1

3.2.3.2 Transverse Direction

The load case data for the Y-direction is shown Figure 3.2.3.2-1 (**Define menu > Load Cases > *select* EY > *click* Modify/Show Load Case *button***).

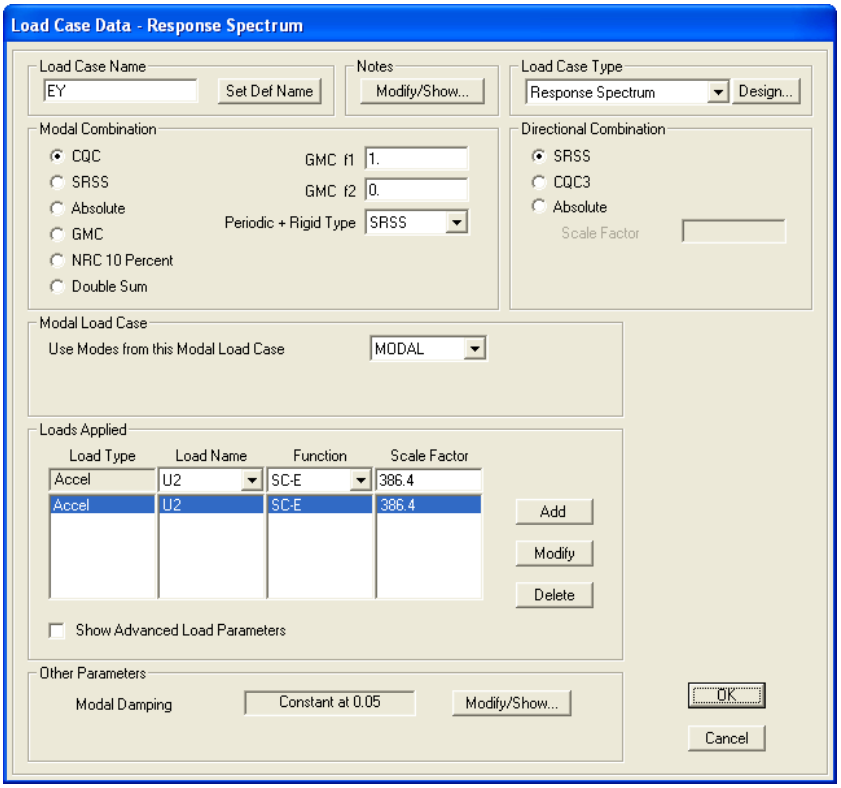

Load Case Data for Load Case "EY"
Figure 3.2.3.2-1

3.2.4 Response-Spectrum Displacements

The column displacements in this example are tracked at Joint 33, which is located at the top of a column. Since the bridge is symmetric, all of the columns have the same displacements in the response-spectrum analyses.

3.2.4.1 Longitudinal Direction

The horizontal displacements at the tops of the columns from the EX analysis case are U1 = 7.48 inches and U2 = 0.00 inches. This is shown in Figure 3.2.4.1-1 as displayed in SAP2000 (**Display menu > Show Deformed Shape >** ***select*** **EX >** ***click*** **OK** ***button***).

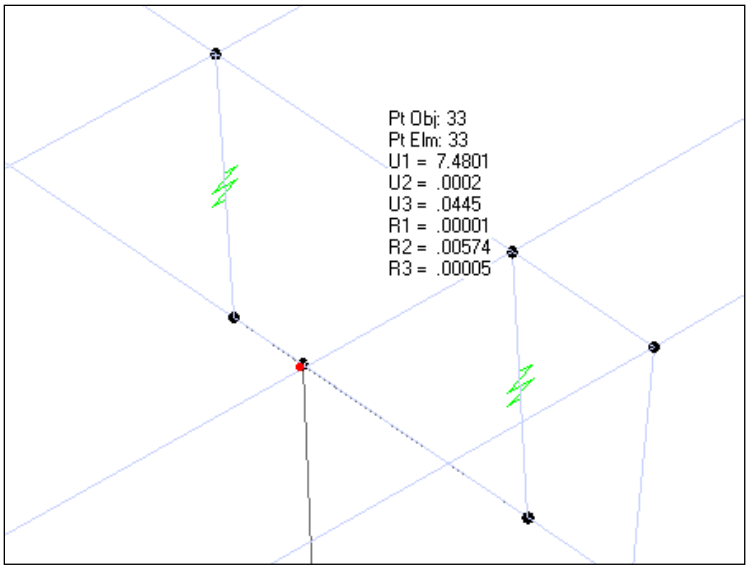

Joint Displacement at Joint 33 for Load Case "EX"
Figure 3.2.4.1-1

3.2.4.2 Transverse Direction

The horizontal displacements at the tops of the columns from the EY analysis case are U1 = 0.17 inches and U2 = 3.55 inches. This is shown in Figure 3.2.4.2-1 as displayed in SAP2000 (**Display menu > Show Deformed Shape >** ***select*** **EY >** ***click*** **OK** ***button***).

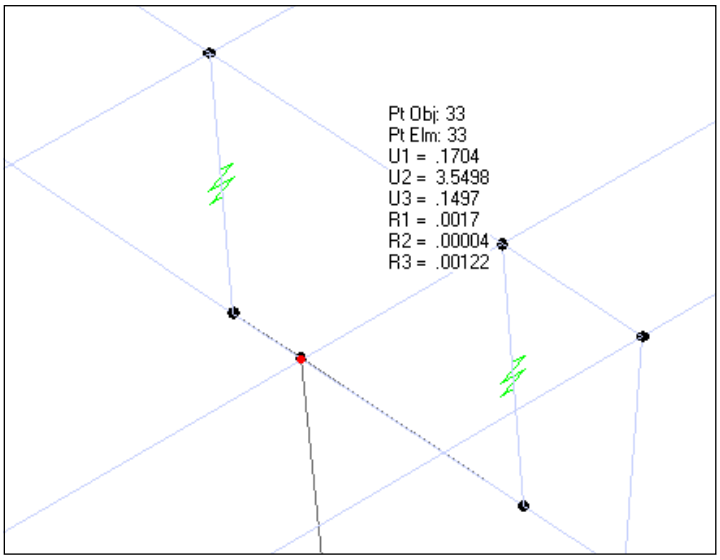

Joint Displacement at Joint 33 for Load Case "EY"
Figure 3.2.4.2-1

3.3 Displacement Demand

3.3.1 Displacement Magnification

Displacement magnification must be performed in accordance with Section 4.3.3 of the *AASHTO Guide Specifications for LRFD Seismic Bridge Design*.

Compute T_s and T^*:

T_s = S_{D1} / S_{DS}
= 0.830 / 0.919
= 0.903 sec.

T^* = 1.25 T_s
= 1.25 * 0.903
= 1.13 sec.

3.3.1.1 Longitudinal Direction

Compute magnification for the X-direction (Longitudinal):

T_{Long} = 0.95 sec. (see section 3.1.4)

T^* / T_{Long} = 1.13 / 0.95
= 1.19 > 1.0 => Magnification is required

R_{d_Long} = $(1 – 1/\mu_D) * (T^* / T) + 1 / \mu_D$
= (1 – 1/6) * (1.19) + 1/6 (Assume $\mu_D = 6$)
= 1.16

3.3.1.2 Transverse Direction

Compute magnification for the Y-direction (Transverse):

T_{Trans} = 0.61 sec. (see section 3.1.4)

T^* / T_{Trans} = 1.13 / 0.61
= 1.85 > 1.0 => Magnification is required

R_{d_Trans} = $(1 – 1/\mu_D) * (T^* / T) + 1 / \mu_D$
= (1 – 1/6) * (1.85) + 1/6 (Assume $\mu_D = 6$)
= 1.71

3.3.2 Column Displacement Demand

Section 4.4 of the *AASHTO Guide Specifications for LRFD Seismic Bridge Design* requires that 100% plus 30% of the displacements from each orthogonal seismic load case be combined to determine the displacement demands. The displacements are tracked as Joint 33, which is located at the top of a column.

3.3.1.1 Longitudinal Direction

For the X-direction (100EX + 30EY):

UX (due to EX) = 7.48 in.

UX (due to EY) = 0.17 in.

Therefore,

$$\Delta^{L}_{D\_Long} = 1.0 * R_{d\_Long} * 7.48 + 0.3 * R_{d\_Trans} * 0.17$$
$$= 1.0 * 1.16 * 7.48 + 0.3 * 1.71 * 0.17$$
$$= 8.76 \text{ in.} \Rightarrow \text{This is the displacement demand for the X-Dir}$$

3.3.1.2 Transverse Direction

For the Y-direction (100EY + 30EX):

UY (due to EY) = 3.55 in.

UY (due to EX) = 0.00 in.

Therefore,

$$\Delta^{L}_{D\_Trans} = 1.0 * R_{d\_Trans} * 3.55 + 0.3 * R_{d\_Long} * 0.00$$
$$= 1.0 * 1.71 * 3.55 + 0.3 * 1.16 * 0.00$$
$$= 6.07 \text{ in.} \Rightarrow \text{This is the Displacement Demand for the Y-Dir}$$

4. Displacement Capacity Analysis

4.1 Plastic Hinge Definitions and Assignments

4.1.1 Column Inflection Points

The tops and bottoms of all columns have enough moment fixity in all directions to cause plastic hinging, which means the columns will exhibit behavior similar to a fixed-fixed column. The plastic moment capacities of the columns under dead loads will be used to approximate the location of the column inflection points. Therefore, the axial loads (due to dead load) at the top and bottom of the columns must be determined. Due to the symmetry of the bridge in this example, the axial loads are the same for all of the columns, which will not be true for most bridges. Figure 4.1.1-1 shows the axial force diagram for the DC+DW load case as displayed in SAP2000 (**Display menu > Show Forces/Stresses > Frames/Cables >** ***select*** **DC+DW >** ***select*** **Axial Force >** ***click*** **OK** ***button***).

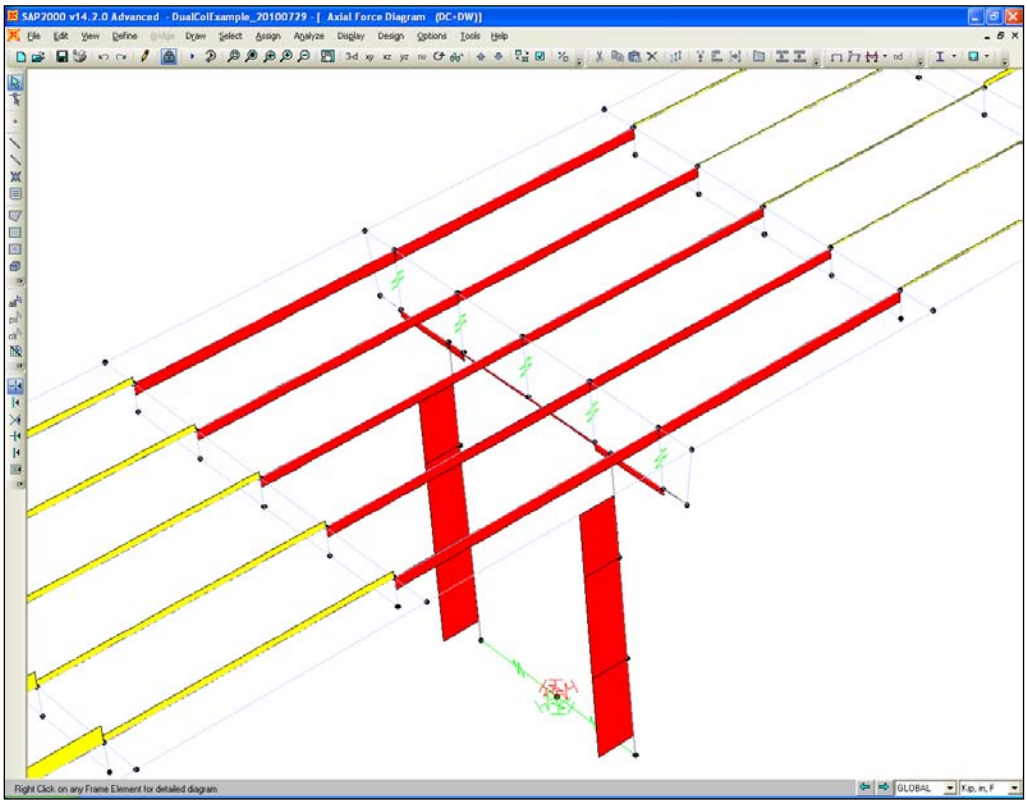

Frame Axial Force Diagram for Load Case "DC+DW"
Figure 4.1.1-1

From the axial loads displayed for the DC+DW load case it is determined that the axial force at the bottom of the column is approximately 1,290 kips and the axial force at the top of the column is approximately 1,210 kips (see section 3.1.2 of this example for a discussion on the inclusion of construction sequence effects on column axial loads). It is expected that the difference in axial load between the tops and bottoms of the columns will not result in a significant difference in the plastic moment. However, on some bridges the axial loads at the tops and bottoms of the columns may be substantially different or the column section may vary along its height producing significantly different plastic moments at each end.

The moment-curvature analysis of the column base is shown in Figure 4.1.1-2 (**Define menu > Section Properties > Frame Sections > *select* COL > *click* Modify/Show Property *button* > *click* Section Designer *button* > Display menu > Show Moment-Curvature Curve**).

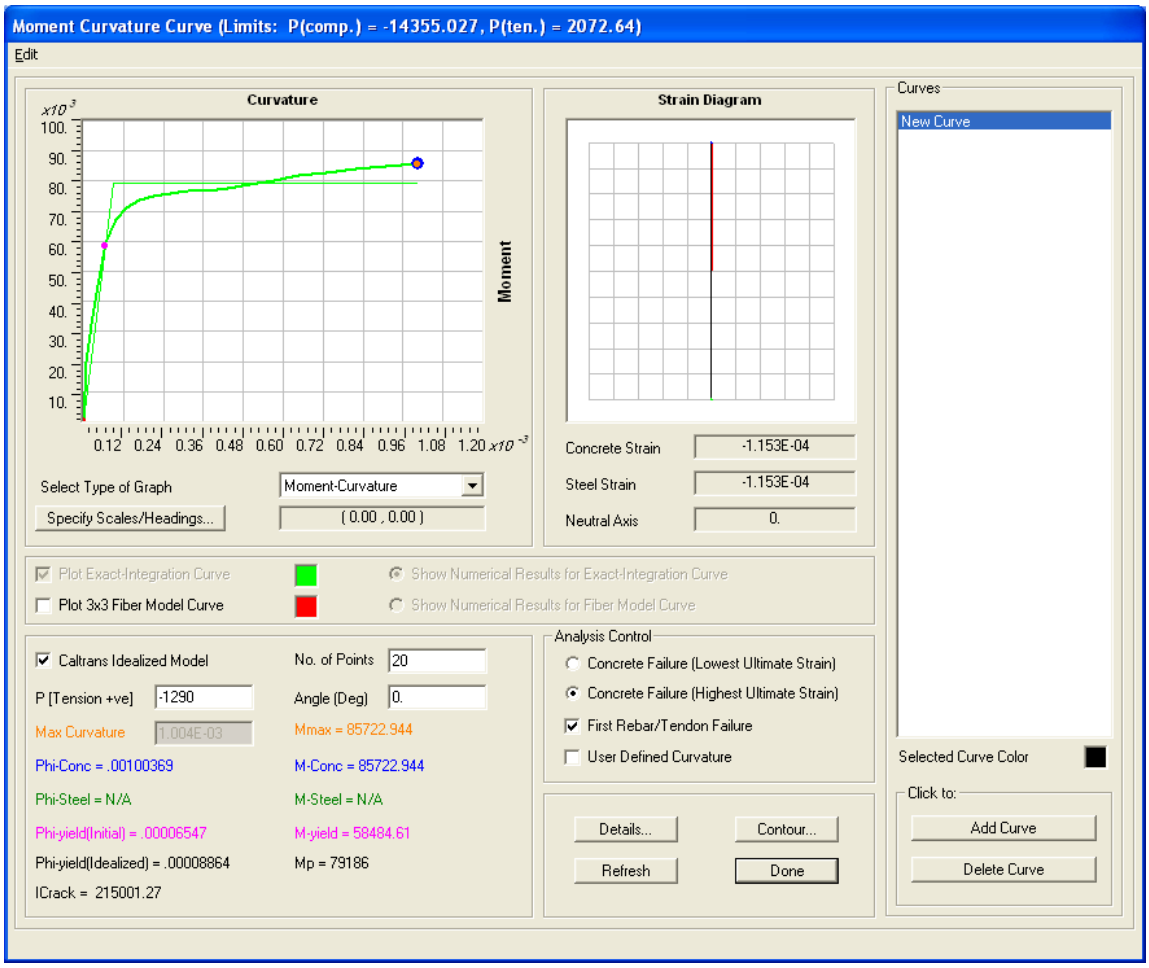

Moment Curvature Curve for Frame Section "COL" at P = -1290 kips
Figure 4.1.1-2

It is seen in Figure 4.1.1-2 that the plastic moment capacity at the base of the column is 79,186 kip-inches (with only dead load applied).

The moment-curvature analysis of the column top is shown in Figure 4.1.1-3 (**Define menu > Section Properties > Frame Sections > *select* COL > *click* Modify/Show Property *button* > *click* Section Designer *button* > Display menu > Show Moment-Curvature Curve**).

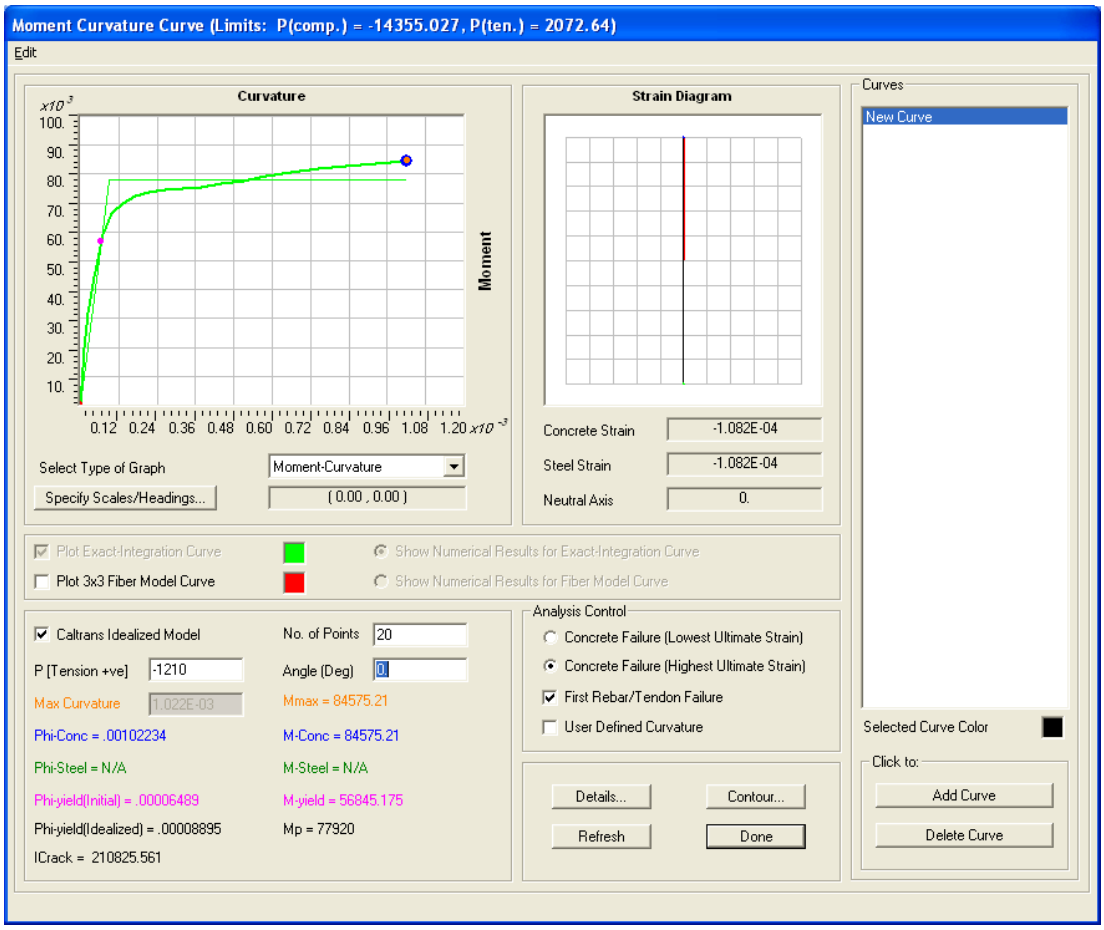

Moment Curvature Curve for Frame Section "COL" at P = -1210 kips
Figure 4.1.1-3

It is seen in Figure 4.1.1-3 that the plastic moment capacity at the top of the column is 77,920 kip-inches (with only dead load applied).

The clear height of the columns is 350 inches; therefore:

L_1 = Length from point of maximum moment at base of column to inflection point (in.)
= 350 x $M_{p\_col\_base}$ / ($M_{p\_col\_base}$ + $M_{p\_col\_top}$)
= 350 x 79186 / (79186 + 77920)
= 176 in.

L_2 = Length from point of maximum moment at top of column to inflection point (in.)
= 350 – L_1
= 350 – 176
= 174 in.

4.1.2 Plastic Hinge Lengths

The plastic hinge lengths must be computed at both the tops and bottoms of the columns using the equations in Section 4.11.6 of the *AASHTO Guide Specifications for LRFD Seismic Bridge Design*. The hinge length is computed as follows:

$$L_p = 0.08L + 0.15f_{ye}d_{bl} \geq 0.3f_{ye}d_{bl}$$

Where:

L = length of column from point of maximum moment to the point of moment contraflexure (in.)
= L_1 at the base of the columns ($L_{1Long} = L_{1Trans} = 176$ in.)
= L_2 at the top of the columns ($L_{2Long} = L_{2Trans} = 174$ in.)

f_{ye} = expected yield strength of longitudinal column reinforcing steel bars (ksi)
= 68 ksi (ASTM A706 bars).

d_{bl} = nominal diameter of longitudinal column reinforcing steel bars (in.)
= 1.27 in. (#10 bars)

L_{p1} = Plastic hinge length at base of column
$= 0.08*176 + 0.15*68*1.27 \geq 0.3*68*1.27$
$= 27.03 \geq 25.91$
= 27.0 in.

L_{p2} = Plastic hinge length at top of column
$= 0.08*174 + 0.15*68*1.27 \geq 0.3*68*1.27$
$= 26.87 \geq 25.91$
= 26.9 in.

In this example, the plastic hinge lengths in both directions are the same because the locations of the inflection points in both directions are the same. This will not always be the case, such as when there is a single column bent.

4.1.3 Assign Plastic Hinges

In order to assign the plastic hinges to the column elements, the relative locations of the plastic hinges along the column frame elements must be computed.

For the bases of the columns:

Relative Length = [Footing Offset + (Hinge Length / 2)] / Element Length
= [30 + (27.0 / 2)] / 146
= 0.30

For the tops of the columns:

Relative Length = [Element Length – Xbeam Offset – (Hinge Length / 2)] / Element Length
= [146 – 58 – (26.9 / 2)] / 146
= 0.51

The hinges at the bases of the columns are assigned at relative distances as shown in Figure 4.1.3-1 (**Assign menu > Frame > Hinges**).

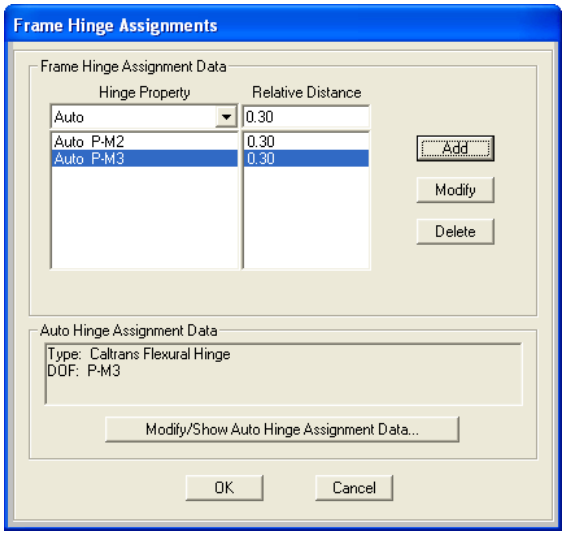

Frame Hinge Assignments for Column Bases
Figure 4.1.3-1

By selecting the **Auto P-M3** Hinge Property in Figure 4.1.3-1 and clicking the **Modify/Show Auto Hinge Assignment Data** button, the window shown in Figure 4.1.3-2 opens. Figure 4.1.3-2 shows the *Auto Hinge Assignment Data* form with input parameters for the hinges at the bases of the columns in the longitudinal direction. Due to the orientation of the frame element local axes, the P-M3 hinge acts in the longitudinal direction.

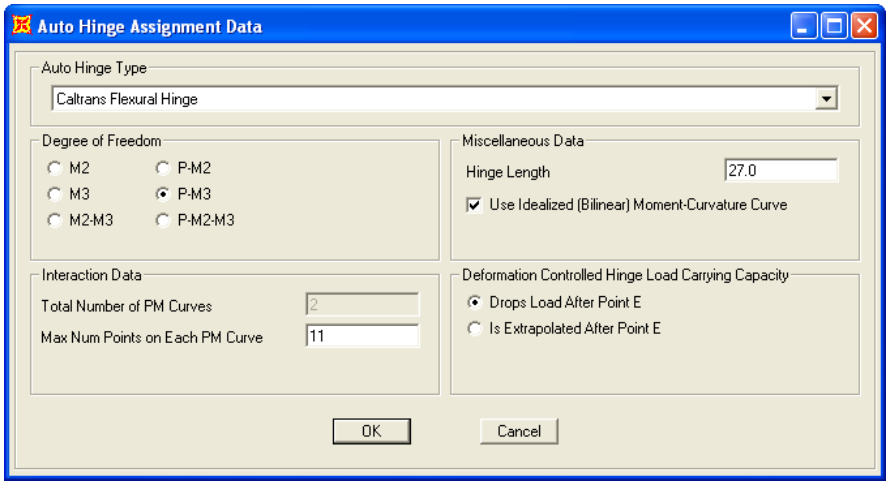

Auto Hinge Assignment Data for Column Bases in Longitudinal Direction
Figure 4.1.3-2

By selecting the **Auto P-M2** Hinge Property in Figure 4.1.3-1 and clicking the **Modify/Show Hinge Assignment Data** button in Figure 4.1.3-1, the window shown in Figure 4.1.3-3 opens. Figure 4.1.3-3 shows the *Auto Hinge Assignment Data* form with input parameters for the hinges at the bases of the columns in the transverse direction. Due to the orientation of the frame element local axes, the P-M2 hinge acts in the transverse direction.

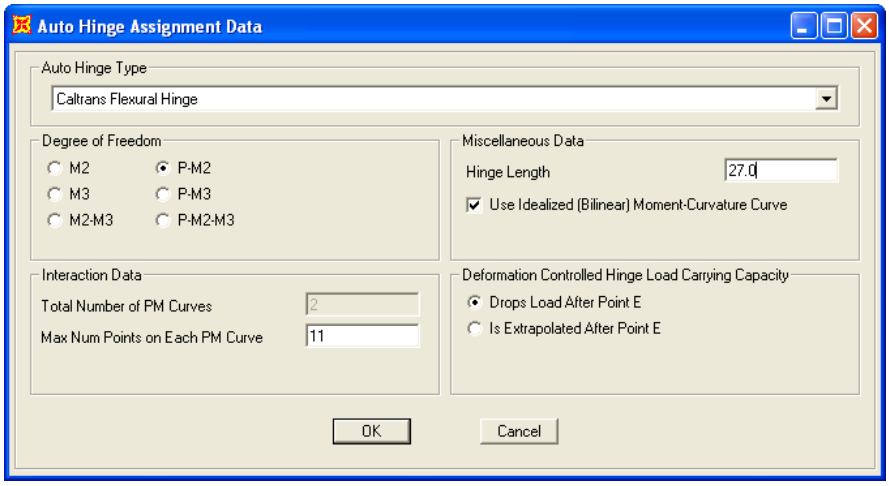

Auto Hinge Assignment Data for Column Bases in Transverse Direction
Figure 4.1.3-3

In Figures 4.1.3-2 and 4.1.3-3 it is seen that the *Hinge Length* is set to **27.0** inches, the **Use Idealized (Bilinear) Moment-Curvature Curve** box is checked, and the **Drops Load After Point E** option is selected.

The hinges at the tops of the columns are assigned at relative distances as shown in Figure 4.1.3-4 (**Assign menu > Frame > Hinges**).

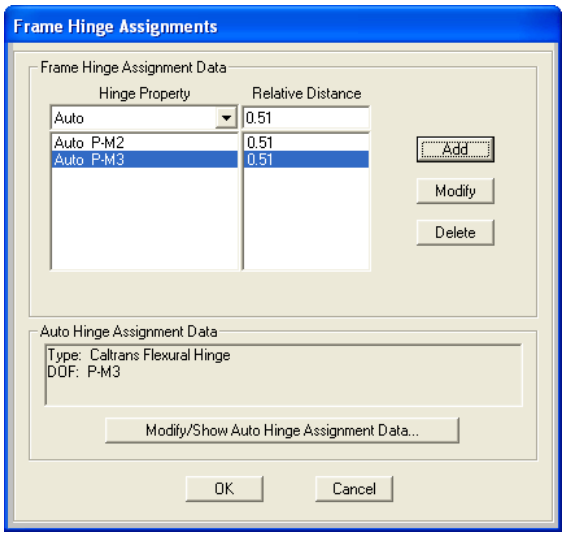

Frame Hinge Assignments for Column Tops
Figure 4.1.3-4

By selecting the **Auto P-M3** Hinge Property in Figure 4.1.3-4 and clicking the **Modify/Show Auto Hinge Assignment Data** button, the window shown in Figure 4.1.3-5 opens. Figure 4.1.3-5 shows the *Auto Hinge Assignment Data* form with input parameters for the hinges at the tops of the columns in the longitudinal direction. Due to the orientation of the frame element local axes, the P-M3 hinge acts in the longitudinal direction.

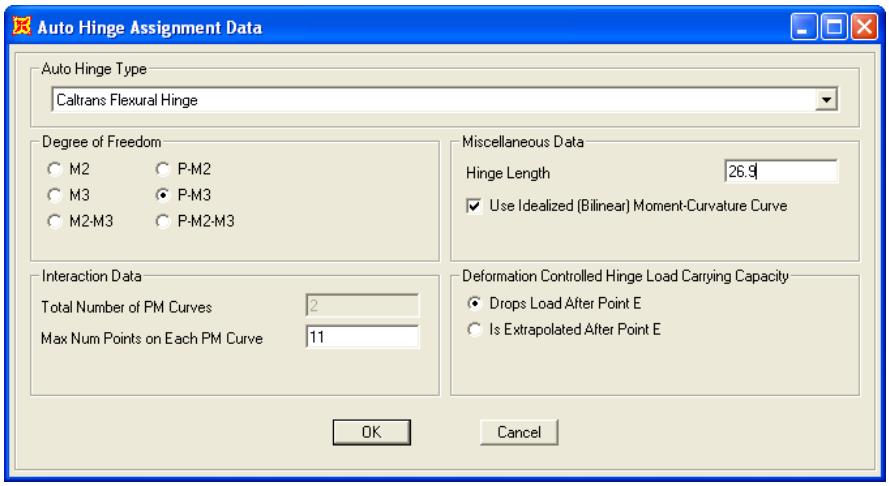

Auto Hinge Assignment Data for Column Tops in Longitudinal Direction
Figure 4.1.3-5

By selecting the **Auto P-M2** Hinge Property in Figure 4.1.3-4 and clicking the **Modify/Show Hinge Assignment Data** button, the window shown in Figure 4.1.3-6 opens. Figure 4.1.3-6 shows the *Auto Hinge Assignment Data* form with input parameters for the hinges at the tops of the columns in the transverse direction. Due to the orientation of the frame element local axes, the P-M2 hinge acts in the transverse direction.

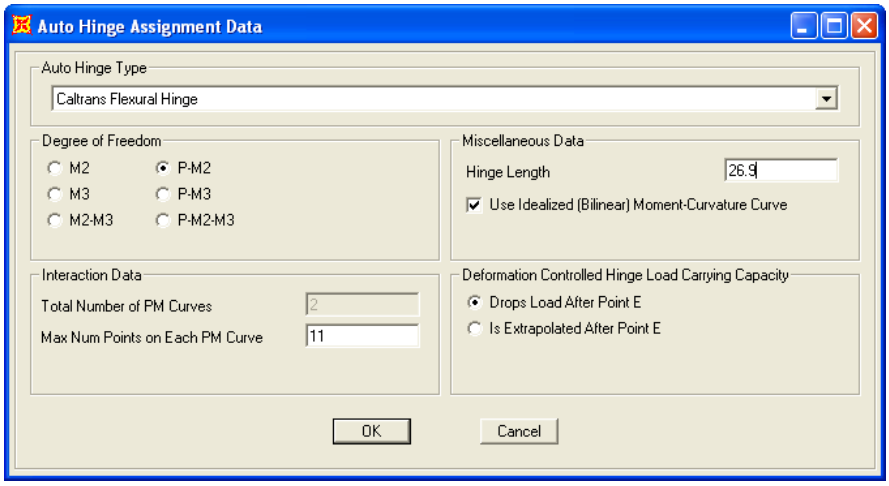

Auto Hinge Assignment Data for Column Tops in Transverse Direction
Figure 4.1.3-6

In Figures 4.1.3-5 and 4.1.3-6 it is seen that the *Hinge Length* is set to **26.9** inches, the **Use Idealized (Bilinear) Moment-Curvature Curve** box is checked, and the **Drops Load After Point E** option is selected.

4.2 Pushover Analysis

4.2.1 Lateral Load Distributions

4.2.1.1 Longitudinal Direction

The lateral load distribution used in this example for the pushover analysis in the longitudinal direction is a direct horizontal acceleration on the structure mass. Also, the dead load can be applied as previously defined since the entire structure is present during the pushover analysis. It should be noted that a lateral load distribution proportional to the fundamental mode shape in the longitudinal direction is also acceptable provided that at least 75% of the structure mass participates in the mode. This recommendation is derived from provisions in *FEMA 356: Prestandard and Commentary for the Seismic Rehabilitation of Buildings*.

4.2.1.2 Transverse Direction

The lateral load distribution used in this example for the pushover analysis in the transverse direction consists of a horizontal load applied at the equivalent of the centroid of the superstructure. This load distribution is used to mimic a direct horizontal acceleration on the superstructure mass. The load is applied this way because the bent is isolated using staged construction and the superstructure is not present for the transverse pushover load case. As mentioned above, a lateral load distribution proportional to the fundamental mode shape in the transverse direction is also acceptable provided that at least 75% of the structure mass participates in the mode.

A special load pattern must be created for the column dead loads since the entire structure is not in place during the pushover analysis. A new load pattern called “Dead-Col_Axial” is added as shown in Figure 4.2.1.2-1 (**Define menu > Load Patterns**).



“Dead-Col_Axial” Load Pattern Definition
Figure 4.2.1.2-1

The column axial loads are 1,250 kips (average of top and bottom). The column dead load moments in the transverse direction are small and can be neglected. Figure 4.2.1.2-2 shows the joint forces assignment window for the “Dead-Col_Axial” load pattern (**Assign menu > Joint Loads > Forces**).

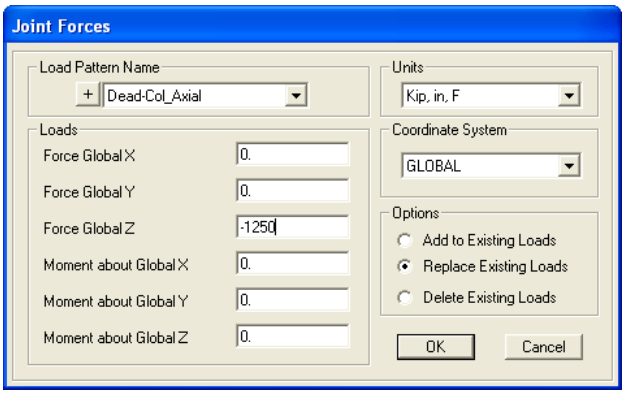

Joint Force Assignment for Load Pattern "Dead-Col_Axial"
Figure 4.2.1.2-2

After the forces defined in Figure 4.2.1.2-2 have been assigned, they can be viewed as shown in Figure 4.2.1.2-3.

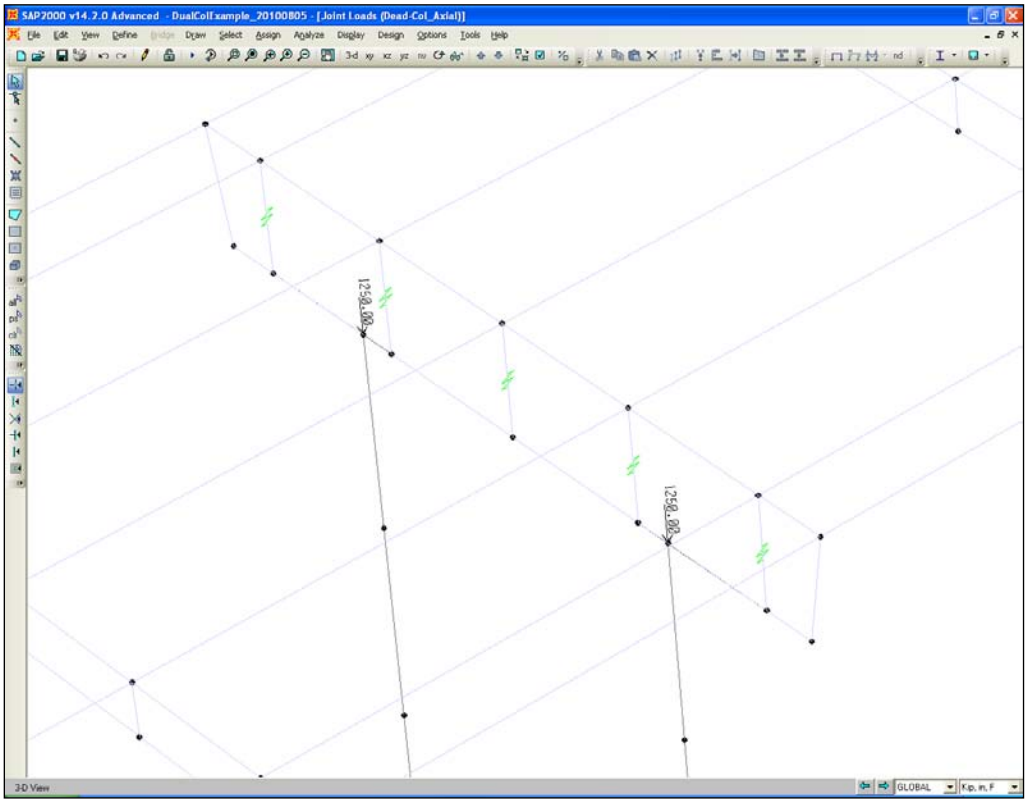

Wireframe View of Assigned Forces for Load Pattern "Dead-Col_Axial"
Figure 4.2.1.2-3

To define the transverse pushover analysis lateral load distribution, a new load pattern called "Trans_Push" is added as shown in Figure 4.2.1.2-4 (**Define menu > Load Patterns**).

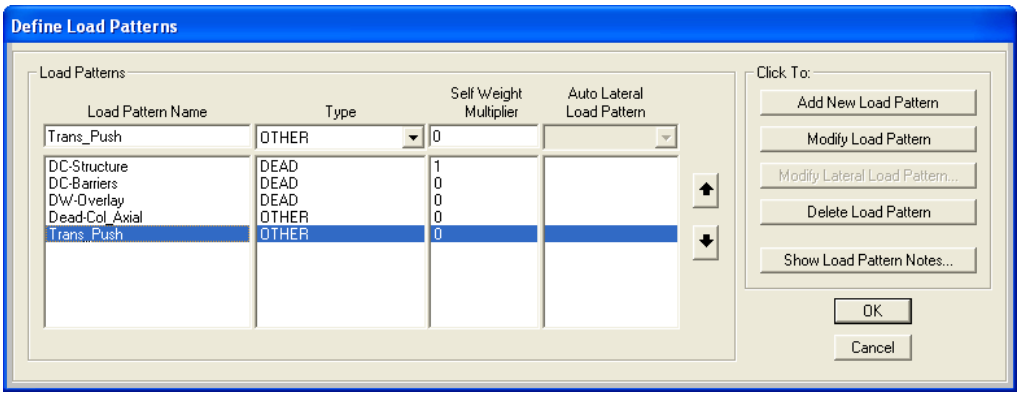

"Trans_Push" Load Pattern Definition
Figure 4.2.1.2-4

Since the superstructure is not defined as a spine element, there is no joint in the plane of the bent located at the centroid of the superstructure. Therefore, the load distribution for the transverse pushover analysis is an equivalent horizontal load consisting of a point load and a moment applied at the center crossbeam joint. The centroid of the superstructure is located 58.83 inches above the center joint. As a result, a joint force with a horizontal point load of 100 kips and a moment of 100*58.83 = 5,883 kip-inches is used. Special care should be taken to ensure that the shear and moment are applied in the proper directions. The joint forces are assigned to the crossbeam center joint as shown in Figure 4.2.1.2-5 (**Assign menu > Joint Loads > Forces**).

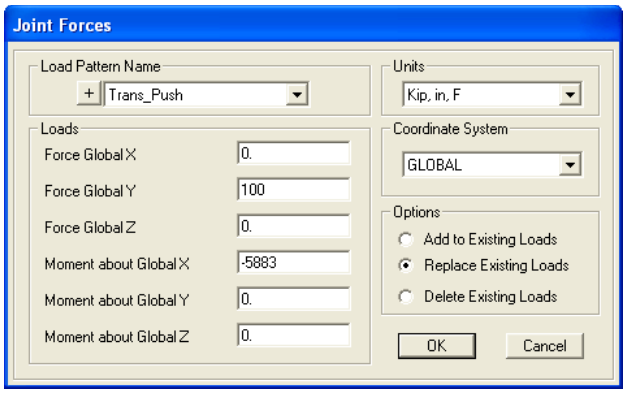

Joint Force Assignment for Load Pattern "Trans_Push"
Figure 4.2.1.2-5

After the forces defined in Figure 4.2.1.2-5 have been assigned, they can be viewed as shown in Figure 4.2.1.2-6.

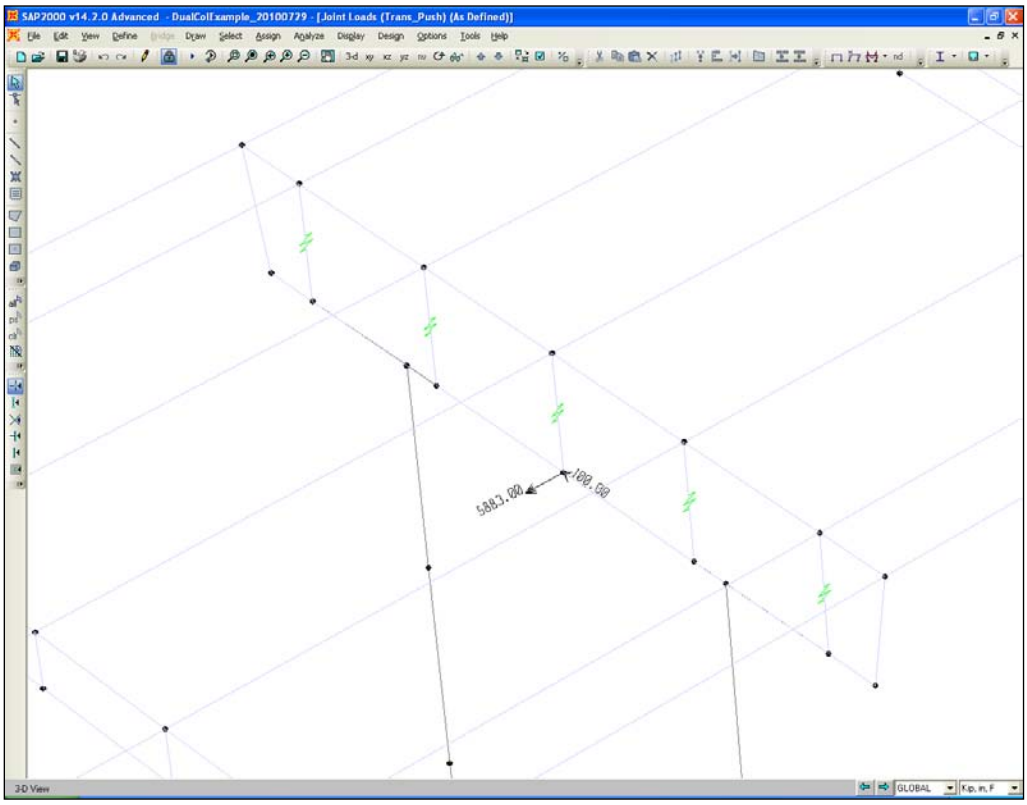

Wireframe View of Assigned Forces for Load Pattern "Trans_Push"
Figure 4.2.1.2-6

4.2.2 Load Case Setup

4.2.2.1 Longitudinal Direction

The dead load (DC+DW) must be applied prior to performing the pushover analysis. To do so in the longitudinal direction, a new load case is created called "LongPushSetup". In this load case, the dead load (DC+DW) is applied and the case is run as a nonlinear analysis. By running the load case as a nonlinear analysis type, another load case can continue from it with the loads stored in the structure.

The *Load Case Data* form for the "LongPushSetup" load case is shown in Figure 4.2.2.1-1 (**Define menu > Load Cases > *select* LongPushSetup > *click* Modify/Show Load Case *button***).

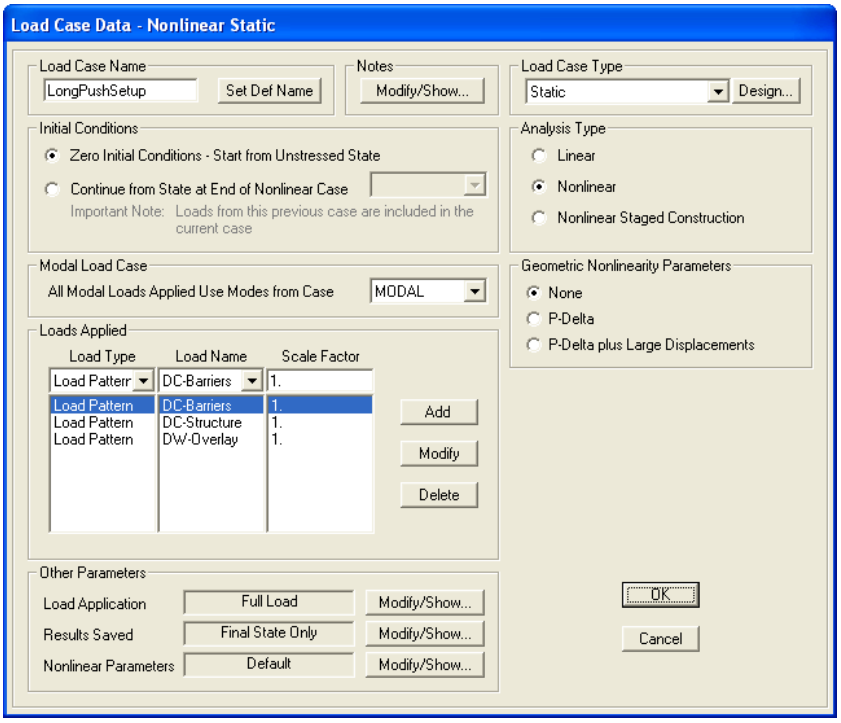

Load Case Data for Load Case "LongPushSetup"
Figure 4.2.2.1-1

It is seen in Figure 4.2.2.1-1 that the *Initial Conditions* are set to **Zero Initial Conditions – Start from Unstressed State**, the *Load Case Type* is **Static**, the *Analysis Type* is set to **Nonlinear**, and the *Geometric Nonlinearity Parameters* are set to **None**.

A new load case is now created called "LongPush", which will actually be the pushover analysis case. The *Load Case Data* form for the "LongPush" load case is shown in Figure 4.2.2.1-2 (**Define menu > Load Cases >** ***select*** **LongPush >** ***click*** **Modify/Show Load Case** ***button***).

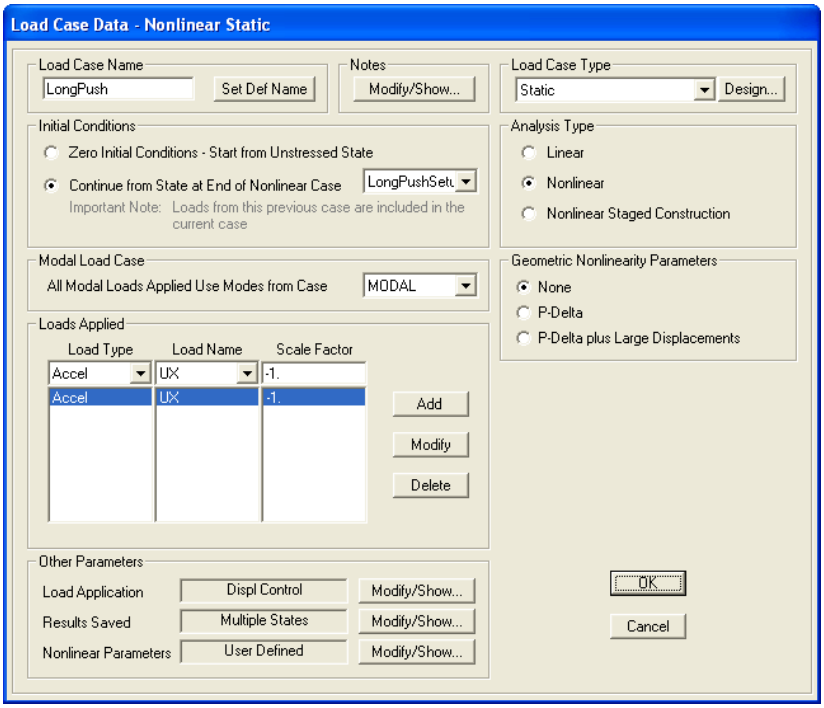

Load Case Data for Load Case "LongPush"
Figure 4.2.2.1-2

It is seen in Figure 4.2.2.1-2 that the *Initial Conditions* are set to **Continue from State at End of Nonlinear Case "LongPushSetup"**, the *Load Case Type* is **Static**, the *Analysis Type* is **Nonlinear**, and the *Geometric Nonlinearity Parameters* are set to **None**. Under *Loads Applied*, the *Load Type* is set to **Accel** in the **UX** direction with a *Scale Factor* equal to **-1**. Applying the acceleration in the negative X-direction results in a negative base shear and positive X-direction displacements.

By clicking the **Modify/Show** button for the *Load Application* parameters in Figure 4.2.2.1-2, the window shown in Figure 4.2.2.1-3 opens. It is seen in Figure 4.2.2.1-3 that the *Load Application Control* is set to **Displacement Control**, the *Load to a Monitored Displacement Magnitude of* value is set at **11** inches which is greater than the longitudinal displacement demand of 8.76 inches. Also, the *DOF* being tracked is **U1** *at Joint* **33**.

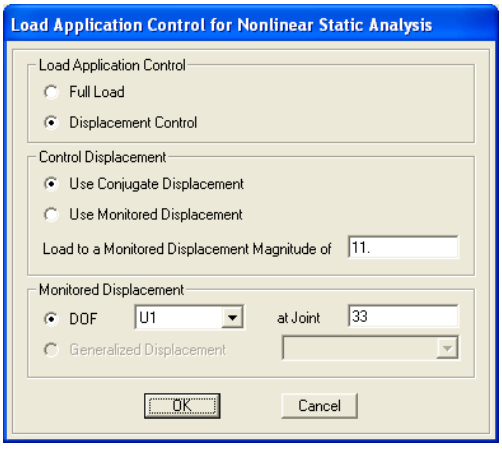

Load Application Control for Load Case "LongPush"
Figure 4.2.2.1-3

By clicking the **Modify/Show** button for the *Results Saved* in Figure 4.2.2.1-2, the window shown in Figure 4.2.2.1-4 opens. It is seen in Figure 4.2.2.1-4 that the *Results Saved* option is set to **Multiple States**, the *Minimum Number of Saved States* is set to **22**, which ensures that a step will occur for at least every half-inch of displacement. Also, the *Save positive Displacement Increments Only* box is checked.

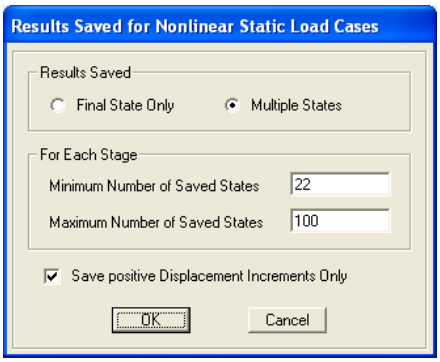

Results Saved for Load Case "LongPush"
Figure 4.2.2.1-4

4.2.2.2 Transverse Direction

As with the longitudinal direction, the dead load must be applied prior to performing the pushover analysis in the transverse direction. However, for the transverse direction, a single bent will be isolated using staged construction prior to performing the pushover analysis. To do so, the elements at Pier 2 are selected and then assigned to a group (**Assign menu > Assign to Group**). Figure 4.2.2.2-1 shows the *Group Definition* for the group "Pier2" (**Define menu > Groups > *select* Pier2 > *click* Modify/Show Group *button***).

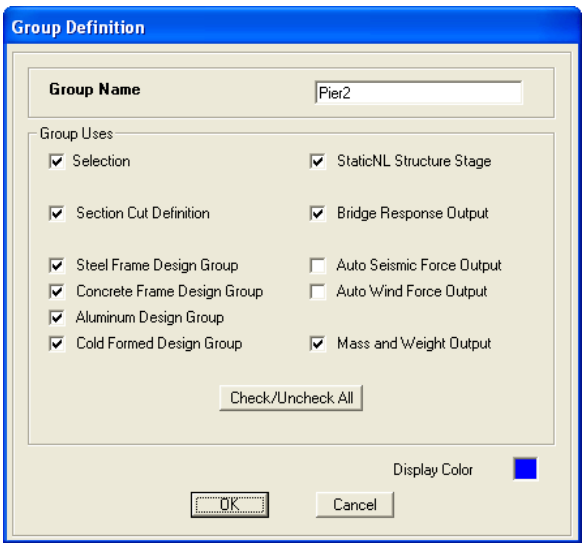

Group Definition for Group "Pier2"
Figure 4.2.2.2-1

To isolate the bent and apply the static loads to the columns, a staged construction load case called "TransPushSetup" is created (**Define menu > Load Cases > *select* TransPushSetup > *click* Modify/Show Load Case *button***). The "TransPushSetup" analysis case has two stages, one to isolate the bent, and one to apply the column axial loads. Note these two stages could be

combined into one stage without altering the results. Stage 1 of the "TransPushSetup" load case definition is shown in Figure 4.2.2.2-2.

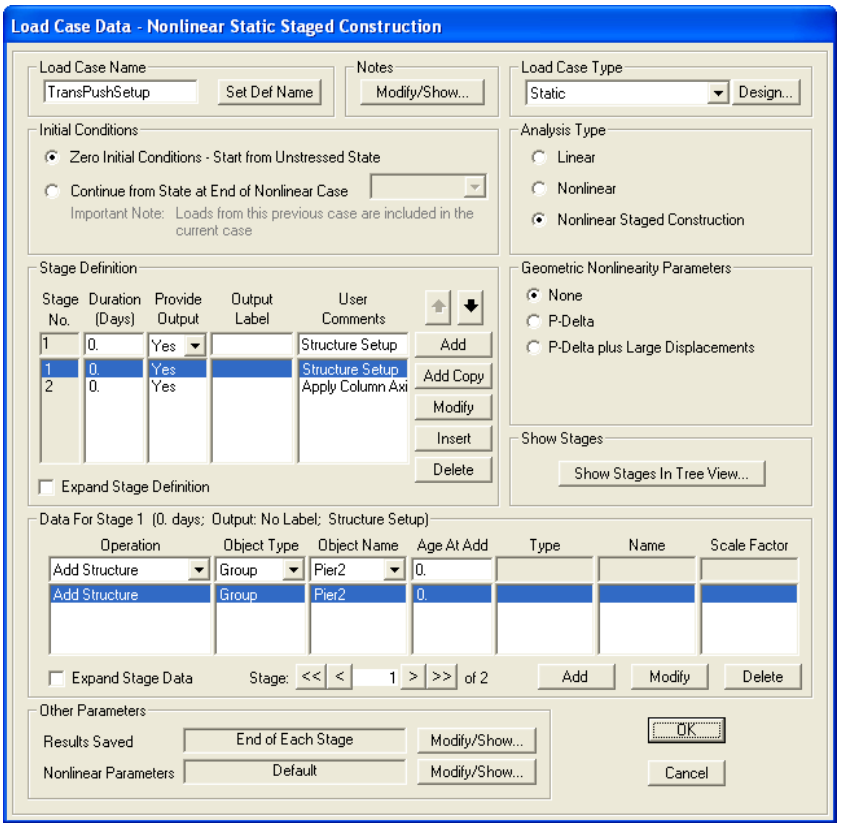

Stage 1 Load Case Data for Load Case "TransPushSetup"
Figure 4.2.2.2-2

It is seen in Figure 4.2.2.2-2 that the only elements added are those in the group "Pier2", the *Initial Conditions* are set to **Zero Initial Conditions – Start from Unstressed State**, the *Load Case Type* is **Static**, the *Analysis Type* is set to **Nonlinear Staged Construction**, and the *Geometric Nonlinearity Parameters* are set to **None**. Stage 2 of the "TransPushSetup" load case definition is shown in Figure 4.2.2.2-3.

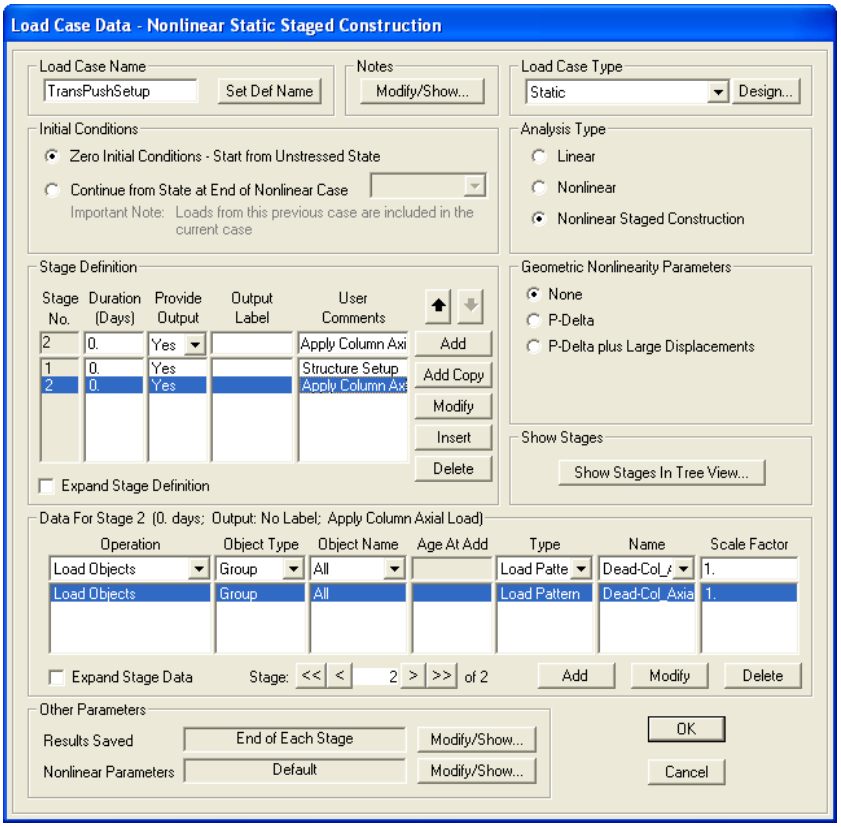

Stage 2 Load Case Data for Load Case "TransPushSetup"
Figure 4.2.2.2-3

It is seen in Figure 4.2.2.2-3 that the load pattern "Dead-Col_Axial" is applied.

A new load case is now created called "TransPush", which will actually be the pushover analysis case. The *Load Case Data* form for the "TransPush" load case is shown in Figure 4.2.2.2-4 (**Define menu > Load Cases >** ***select*** **TransPush >** ***click*** **Modify/Show Load Case** ***button***).

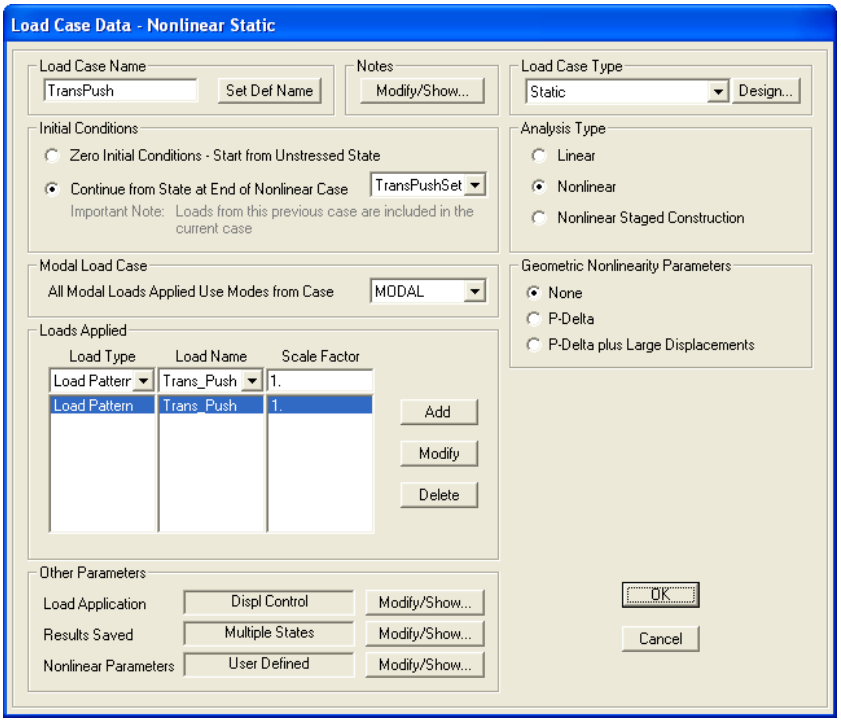

Load Case Data for Load Case "TransPush"
Figure 4.2.2.2-4

It is seen in Figure 4.2.2.2-4 that the *Initial Conditions* are set to **Continue from State at End of Nonlinear Case "TransPushSetup"**, the *Load Case Type* is **Static**, the *Analysis Type* is **Nonlinear**, and the *Geometric Nonlinearity Parameters* are set to **None**. Under *Loads Applied*, the *Load Type* is set to **Load Pattern** with the *Load Name* set to **Trans_Push** and the *Scale Factor* is equal to **1**.

By clicking the **Modify/Show** button for the *Load Application* parameters in Figure 4.2.2.2-4, the window shown in Figure 4.2.2.2-5 opens. It is seen in Figure 4.2.2.2-5 that the *Load Application Control* is set to **Displacement Control**, the *Load to a Monitored Displacement Magnitude of* value is set at **10** inches, which is larger than the transverse displacement demand of 6.07 inches. Also, the *DOF* being tracked is **U2** *at Joint* **33**.

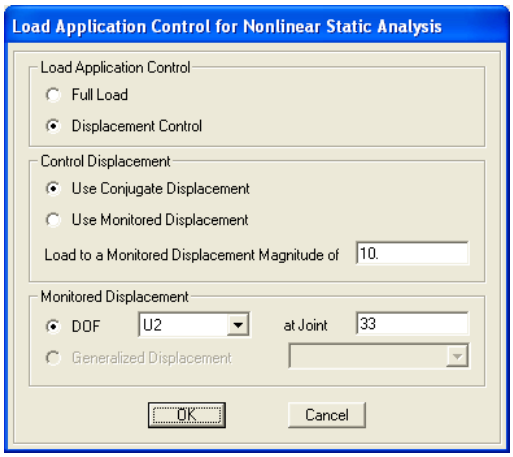

Load Application Control for Load Case "TransPush"
Figure 4.2.2.2-5

By clicking the **Modify/Show** button for the *Results Saved* in Figure 4.2.2.2-4, the window shown in Figure 4.2.2.2-6 opens. It is seen in Figure 4.2.2.2-6 that the *Results Saved* option is set to **Multiple States**, the *Minimum Number of Saved States* is set to **20**, which ensures that a step will occur for at least every half-inch of displacement. Also, the *Save positive Displacement Increments Only* box is checked.

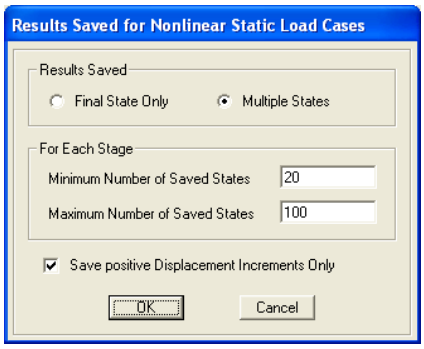

Results Saved for Load Case "TransPush"
Figure 4.2.2.2-6

4.2.3 Load Case Results

4.2.3.1 Longitudinal Direction

The system pushover curve for the longitudinal direction is shown in Figure 4.2.3.1-1 (**Display menu > Show Static Pushover Curve**). The point on the curve where the base shear begins to decrease indicates the displacement at which the first plastic hinge reaches its curvature limit state and is the displacement capacity of the structure.

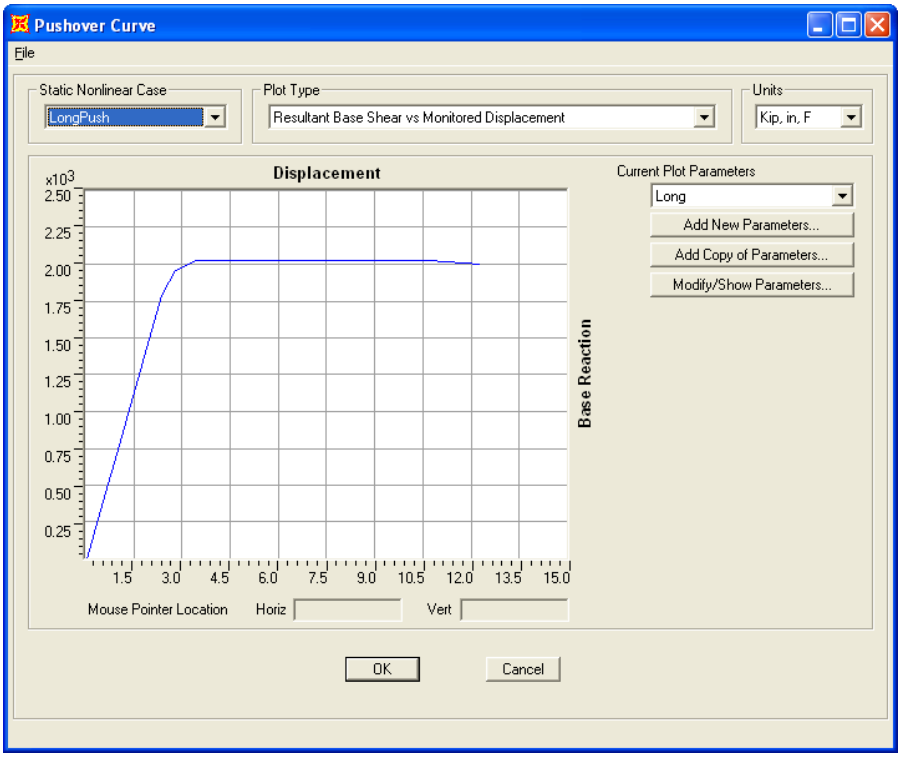

Pushover Curve for Load Case "LongPush"
Figure 4.2.3.1-1

Figures 4.2.3.1-2 through 4.2.3.1-13 show the deformed shape of the structure at various displacements for the load case "LongPush" (**Display menu > Show Deformed Shape >** ***select*** **LongPush >** ***click*** **OK** ***button***). Note that the plastic hinge color scheme terms such as "IO", "LS", and "CP" are in reference to performance based design of building structures. However, for Caltrans plastic hinges, the colors are discretized evenly along the plastic deformation. Therefore, the color scheme still provides a visual representation of the hinge plastic strain progression that is useful.

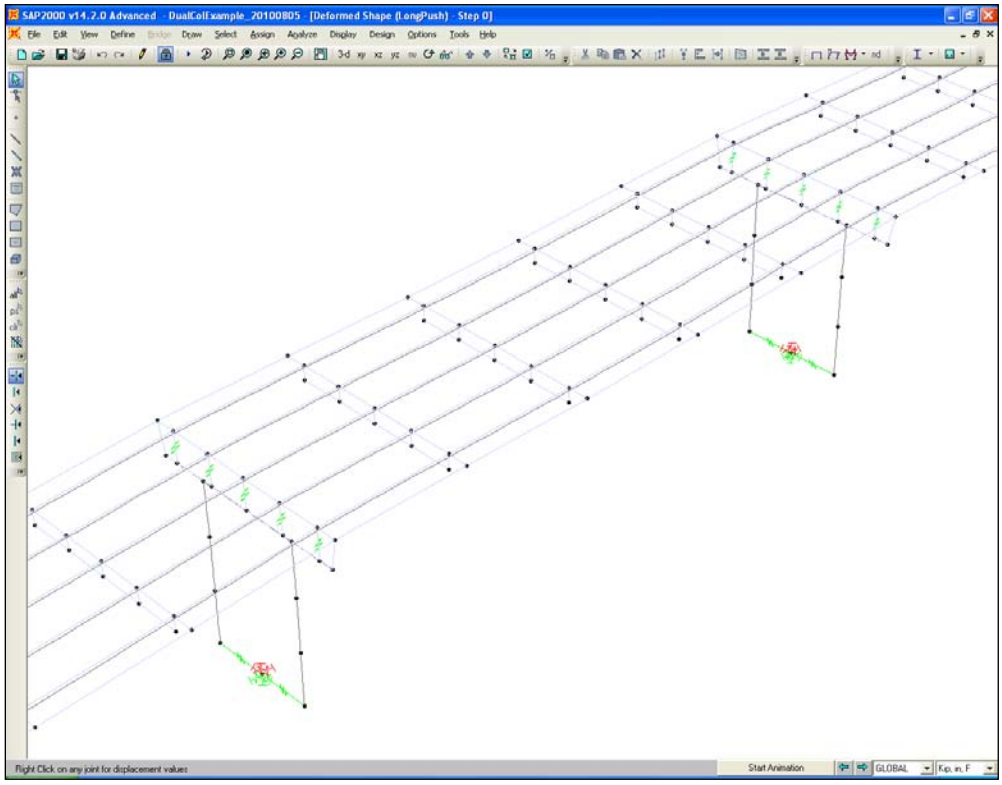

View of Deformed Shape for the Load Case "LongPush" at UX = 0.0 in.
Figure 4.2.3.1-2

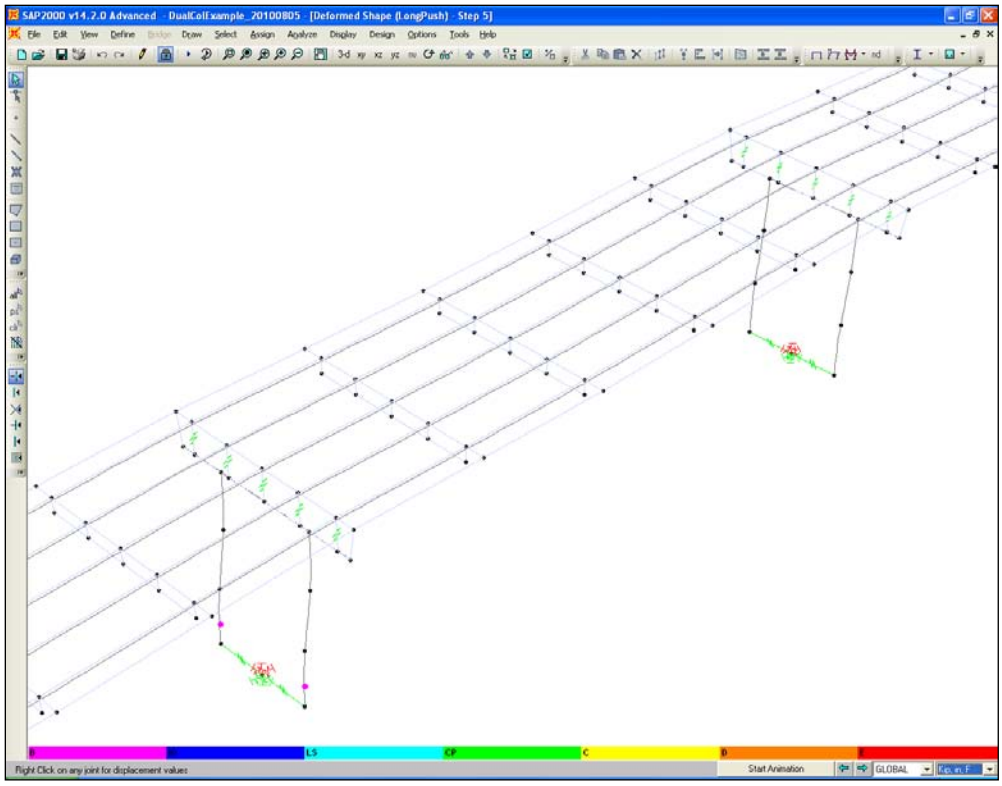

View of Deformed Shape for the Load Case "LongPush" at UX = 2.3 in.
Figure 4.2.3.1-3

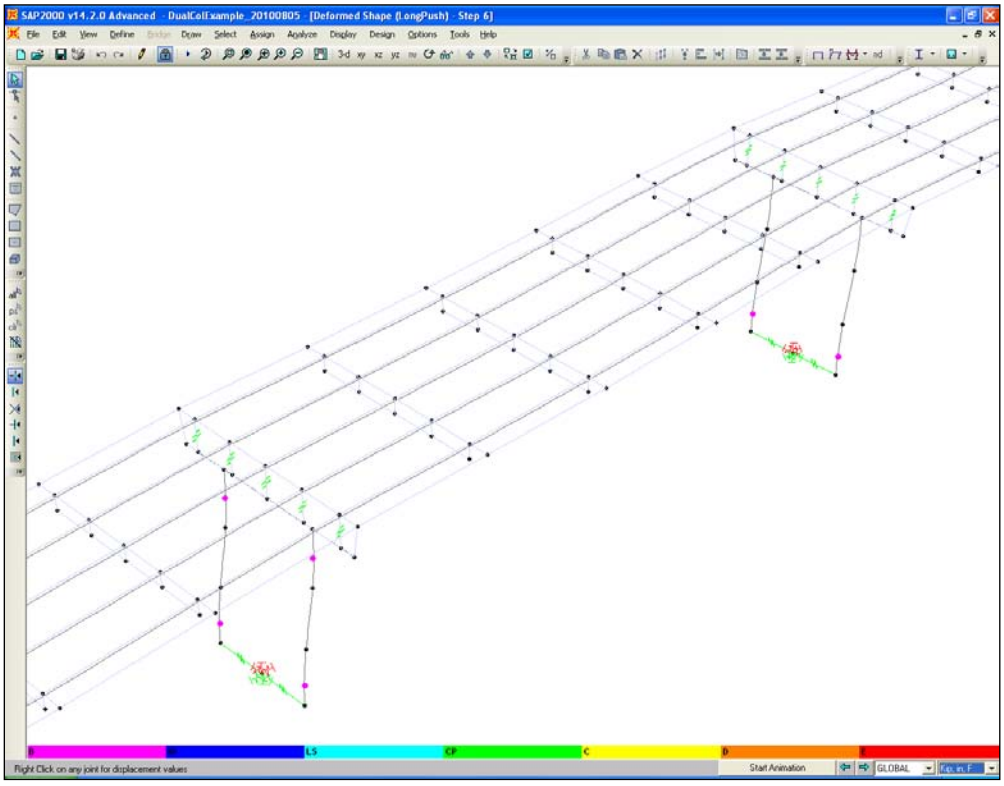

View of Deformed Shape for the Load Case "LongPush" at UX = 2.8 in.
Figure 4.2.3.1-4

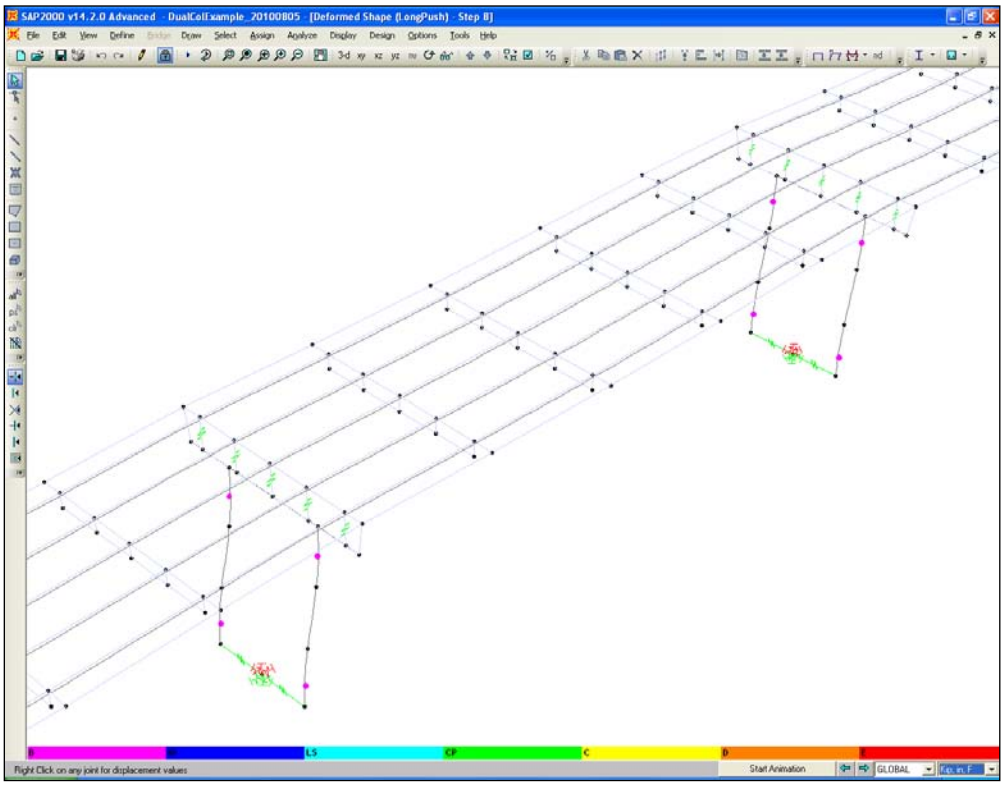

View of Deformed Shape for the Load Case "LongPush" at UX = 3.5 in.
Figure 4.2.3.1-5

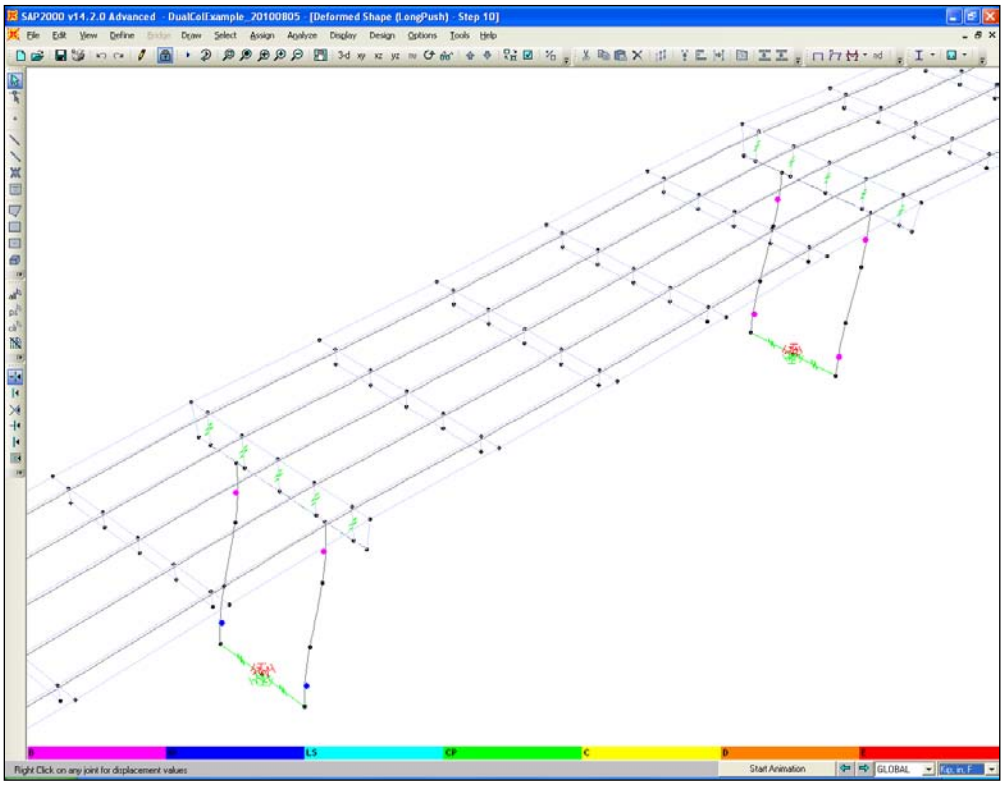

View of Deformed Shape for the Load Case "LongPush" at UX = 4.4 in.
Figure 4.2.3.1-6

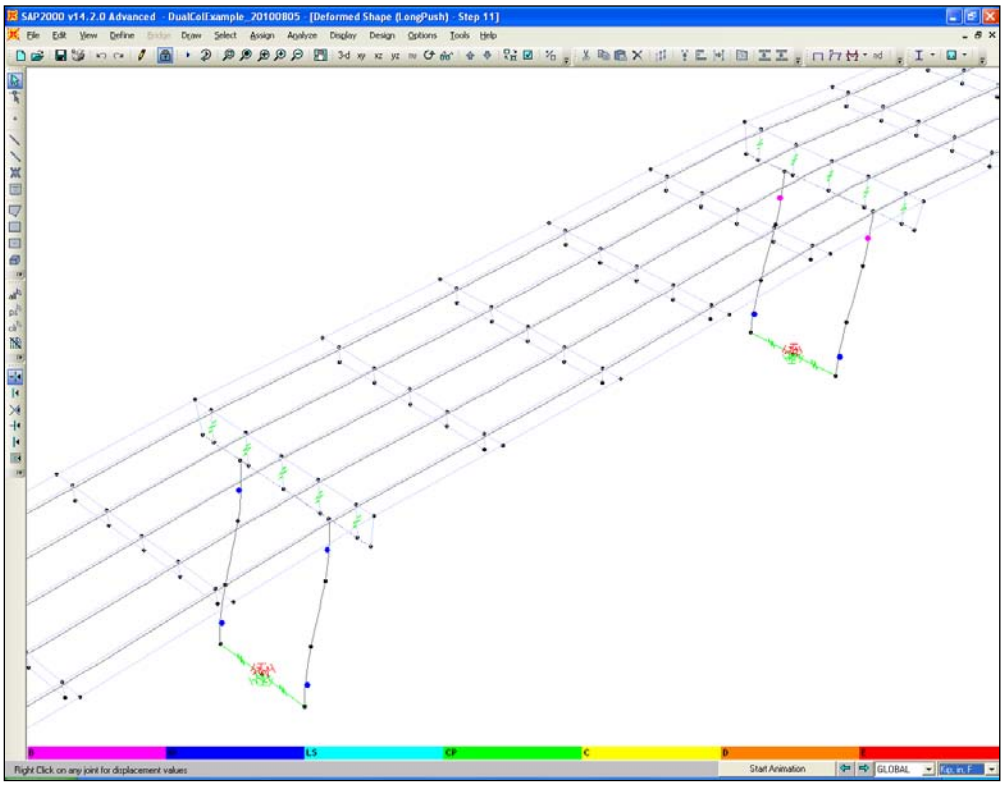

View of Deformed Shape for the Load Case "LongPush" at UX = 4.9 in.
Figure 4.2.3.1-7

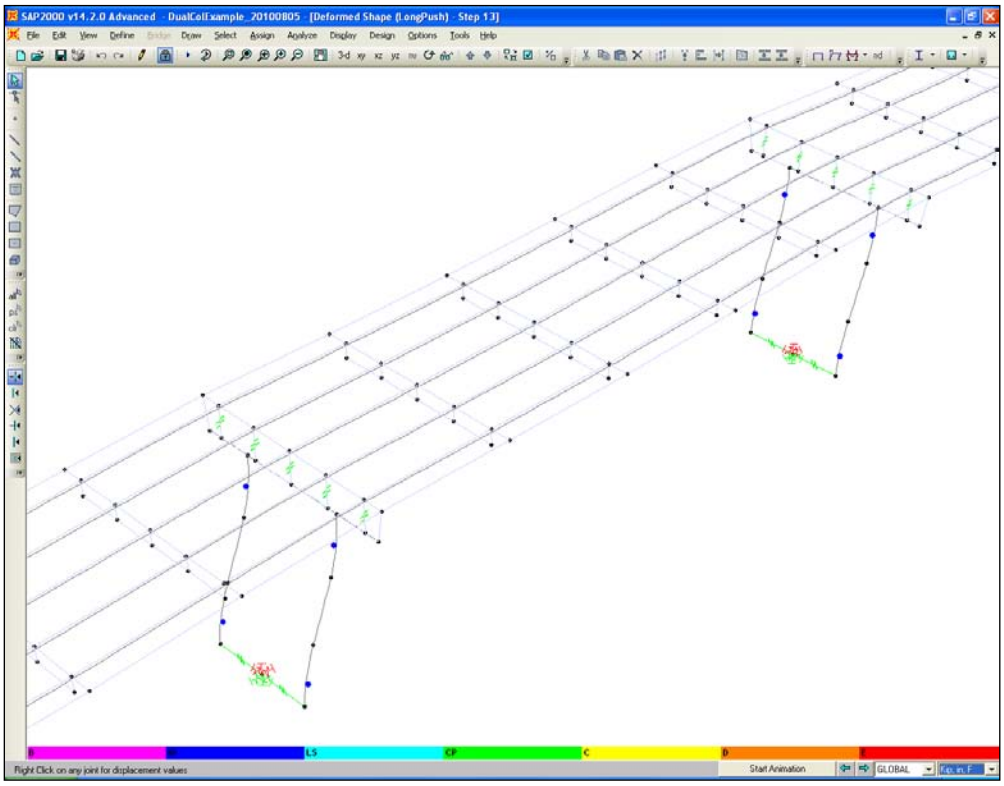

View of Deformed Shape for the Load Case "LongPush" at UX = 5.9 in.
Figure 4.2.3.1-8

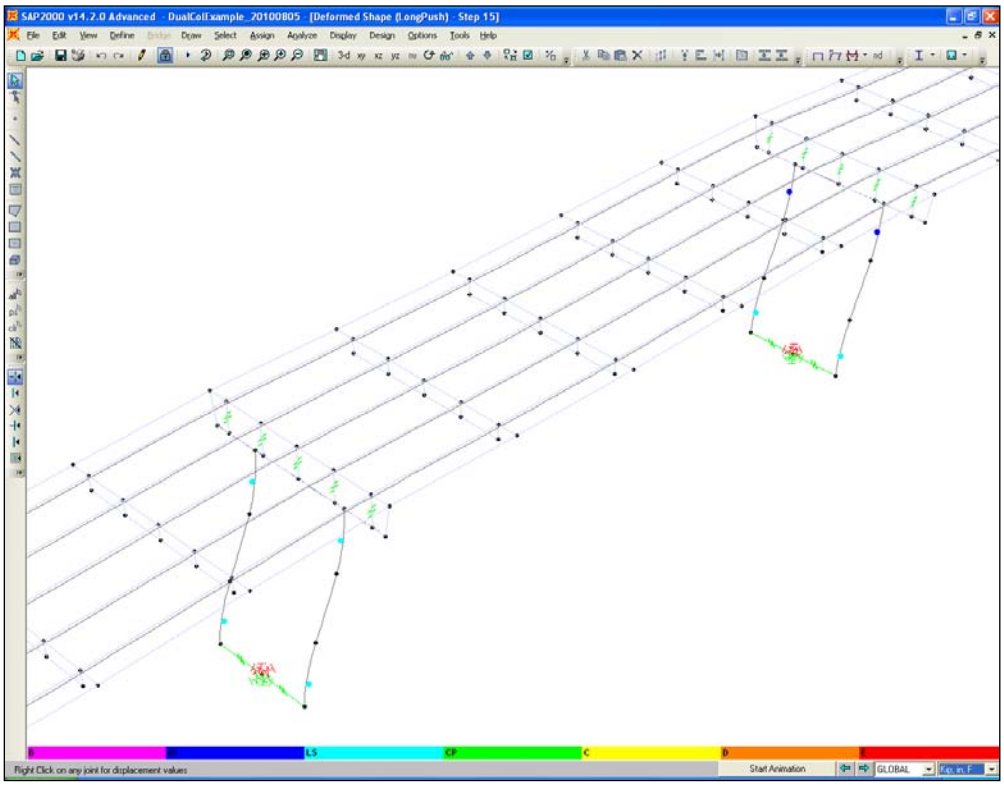

View of Deformed Shape for the Load Case "LongPush" at UX = 6.9 in.
Figure 4.2.3.1-9

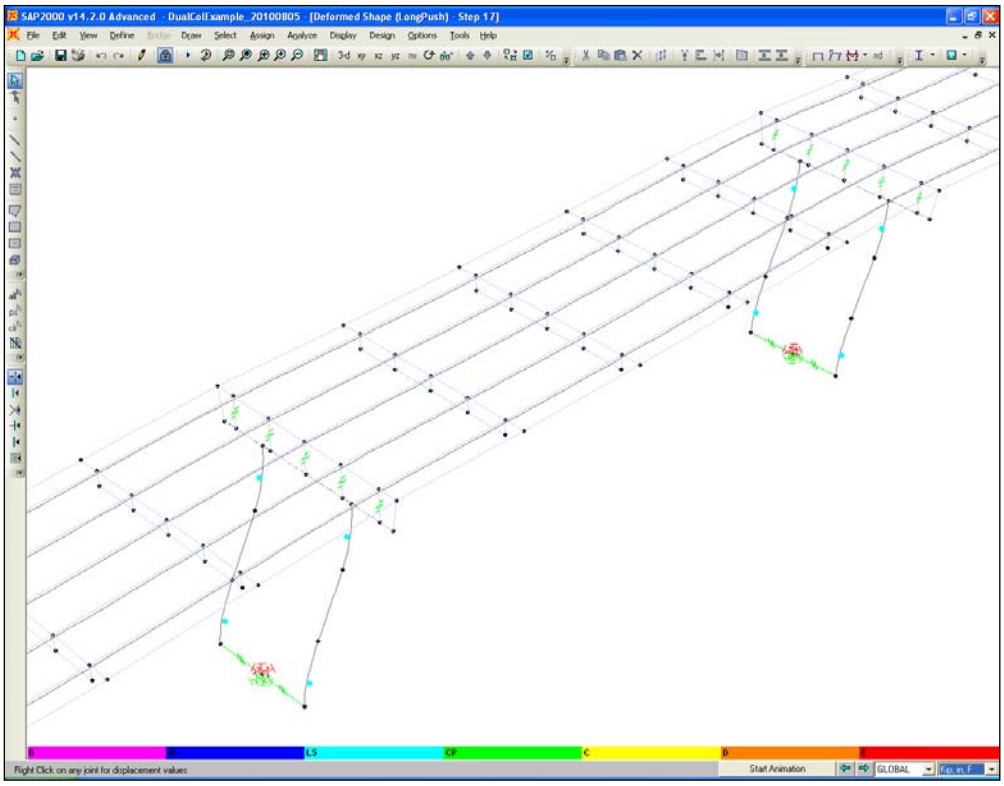

View of Deformed Shape for the Load Case "LongPush" at UX = 7.9 in.
Figure 4.2.3.1-10

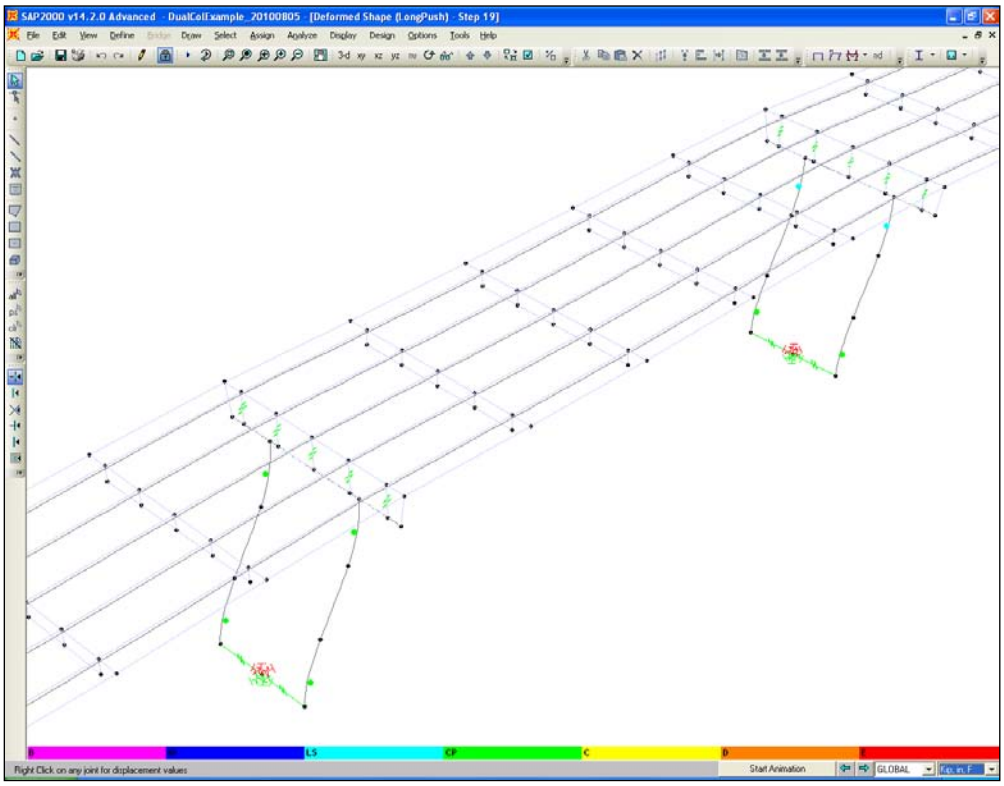

View of Deformed Shape for the Load Case "LongPush" at UX = 8.9 in.
Figure 4.2.3.1-11

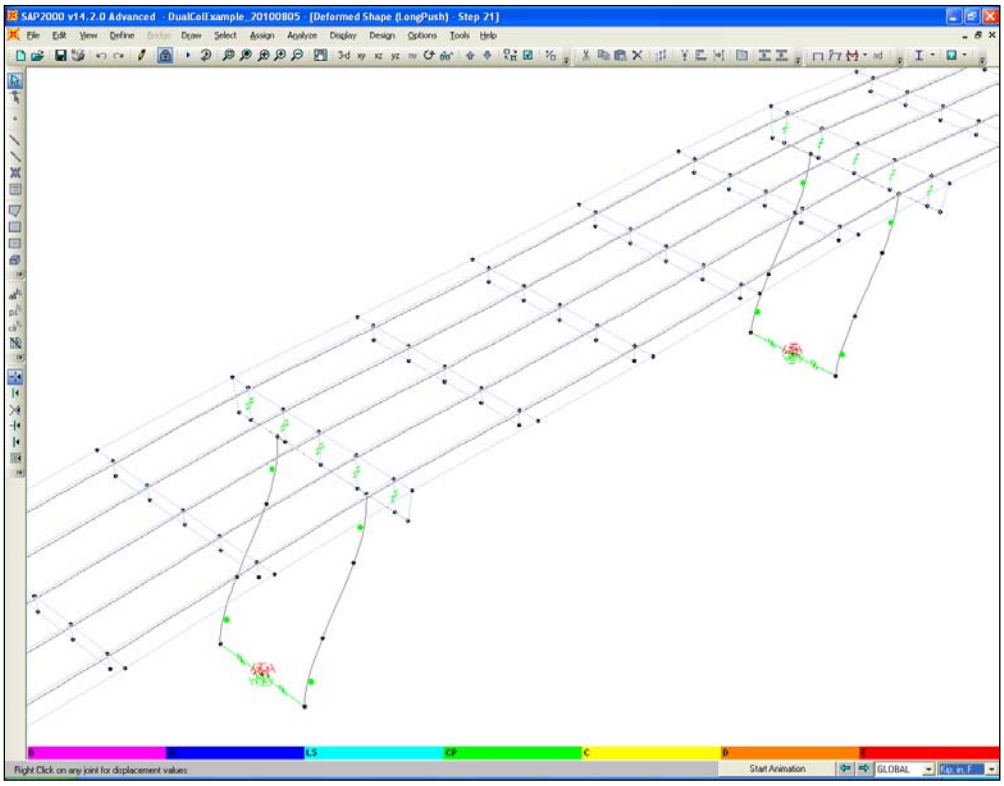

View of Deformed Shape for the Load Case "LongPush" at UX = 9.9 in.
Figure 4.2.3.1-12

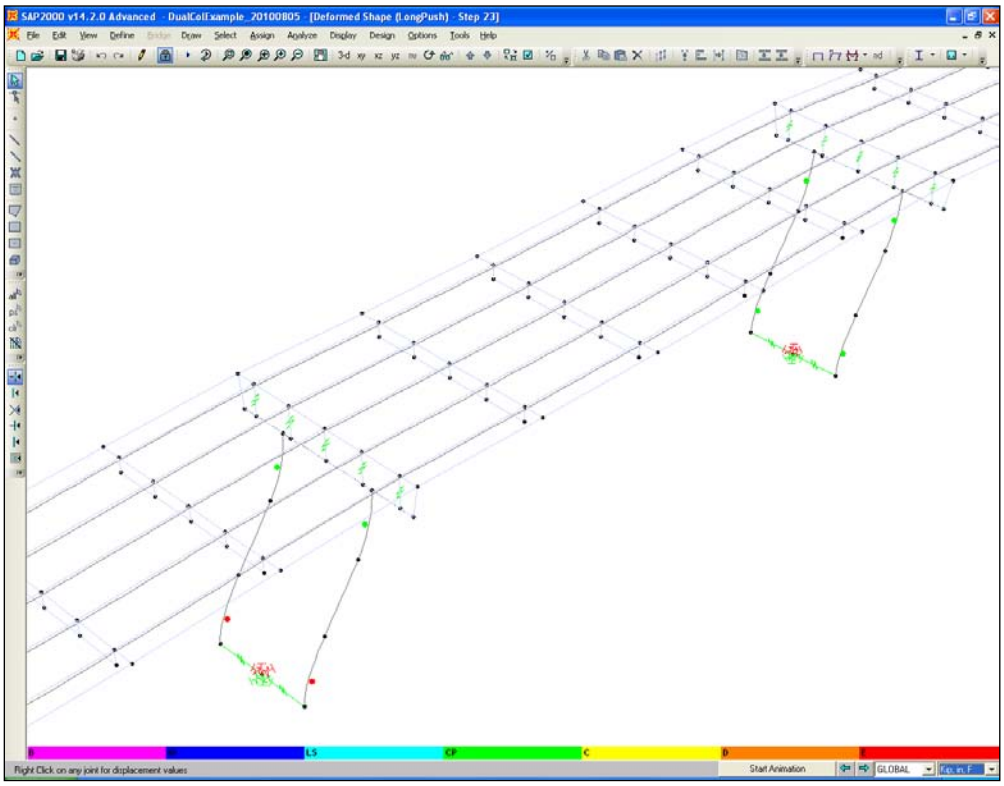

View of Deformed Shape for the Load Case "LongPush" at UX = 10.7 in.
Figure 4.2.3.1-13

4.2.3.2 Transverse Direction

The system pushover curve for the transverse direction is shown in Figure 4.2.3.2-1 (**Display menu > Show Static Pushover Curve**). The point on the curve where the base shear begins to decrease indicates the displacement at which the first plastic hinge reaches its curvature limit state and is the displacement capacity of the structure.

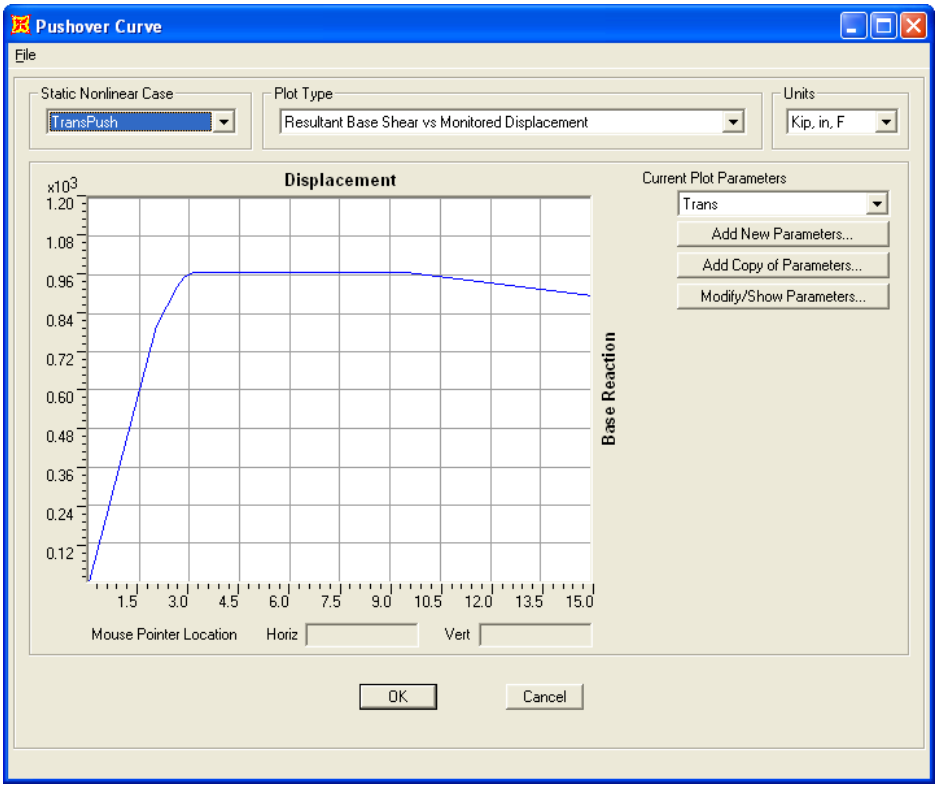

Pushover Curve for Load Case "TransPush"
Figure 4.2.3.2-1

Figures 4.2.3.2-2 through 4.2.3.2-13 show the deformed shape of the structure at various displacements for the load case "TransPush" (**Display menu > Show Deformed Shape >** ***select*** **TransPush >** ***click*** **OK** ***button***). Note that the plastic hinge color scheme terms such as "IO", "LS", and "CP" are in reference to performance-based design of building structures. However, for Caltrans plastic hinges, the colors are discretized evenly along the plastic deformation. Therefore, the color scheme still provides a visual representation of the hinge plastic strain progression that is useful.

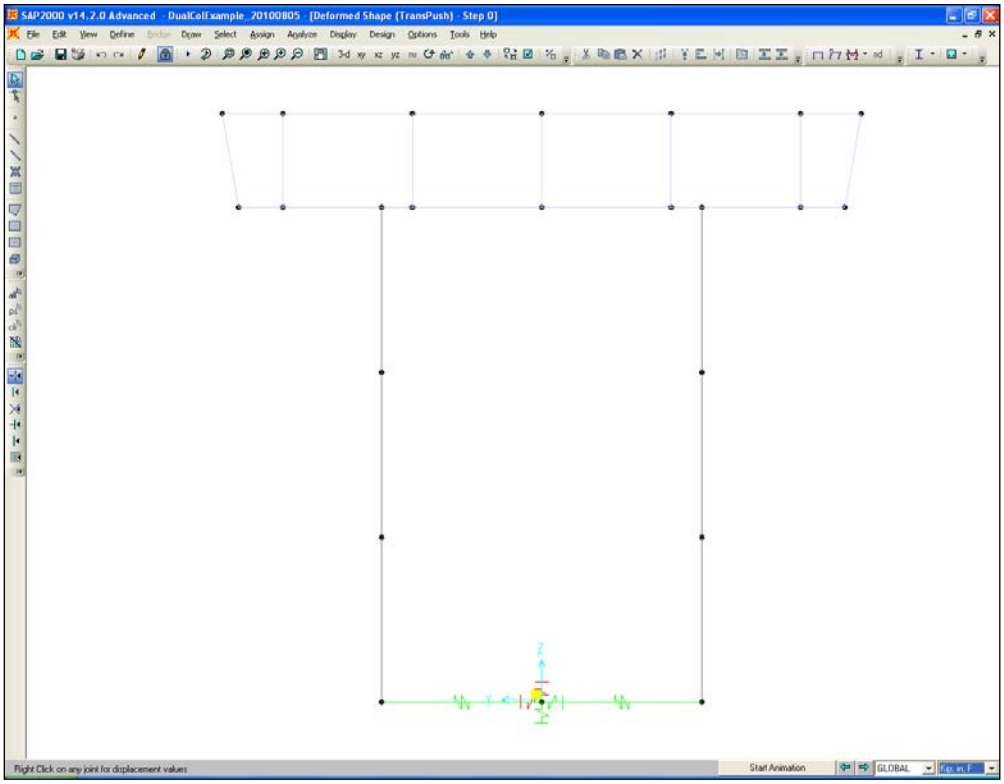

View of Deformed Shape for the Load Case "TransPush" at UY = 0.0 in.
Figure 4.2.3.2-2

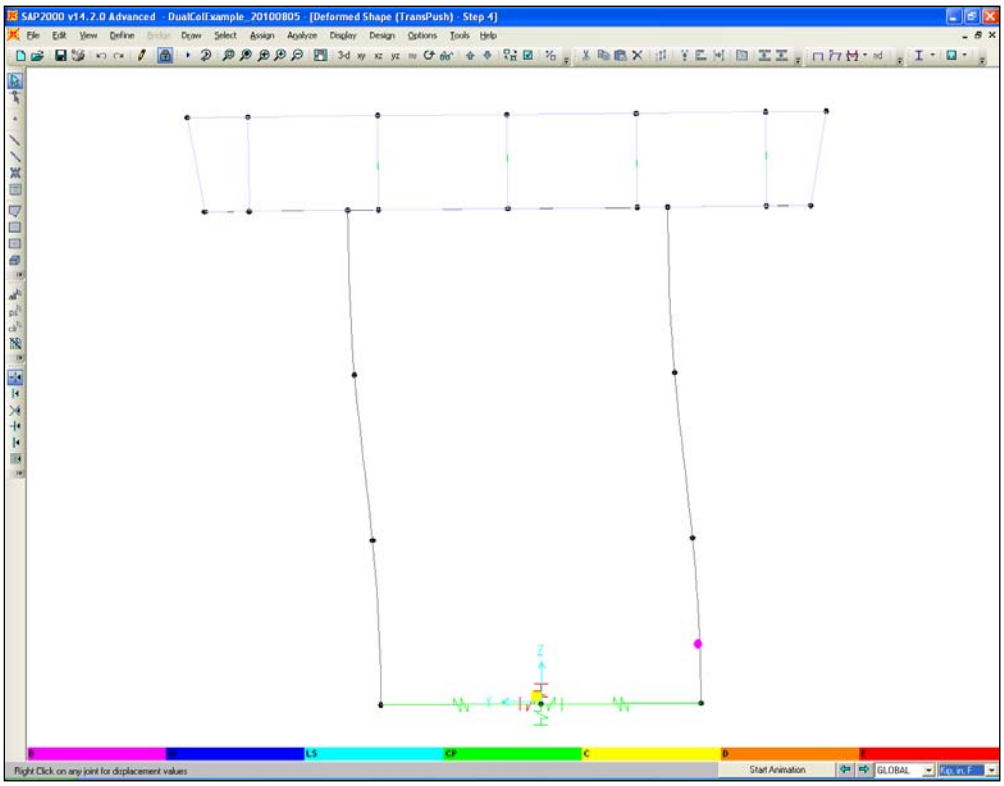

View of Deformed Shape for the Load Case "TransPush" at UY = 2.0 in.
Figure 4.2.3.2-3

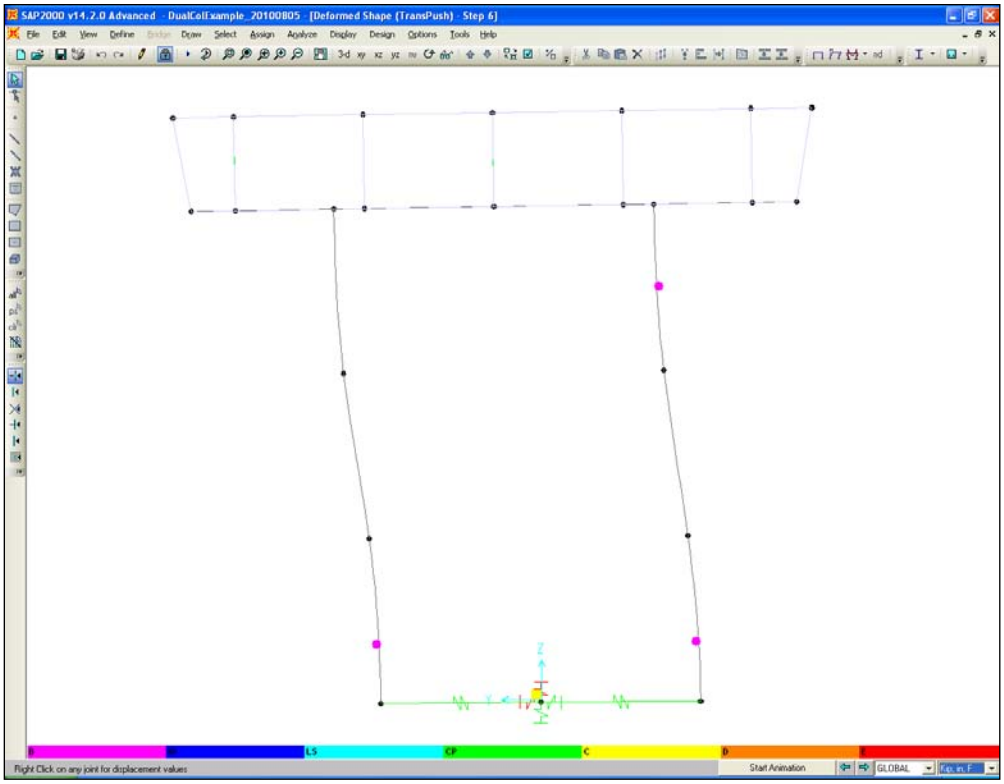

View of Deformed Shape for the Load Case "TransPush" at UY = 2.8 in.
Figure 4.2.3.2-4

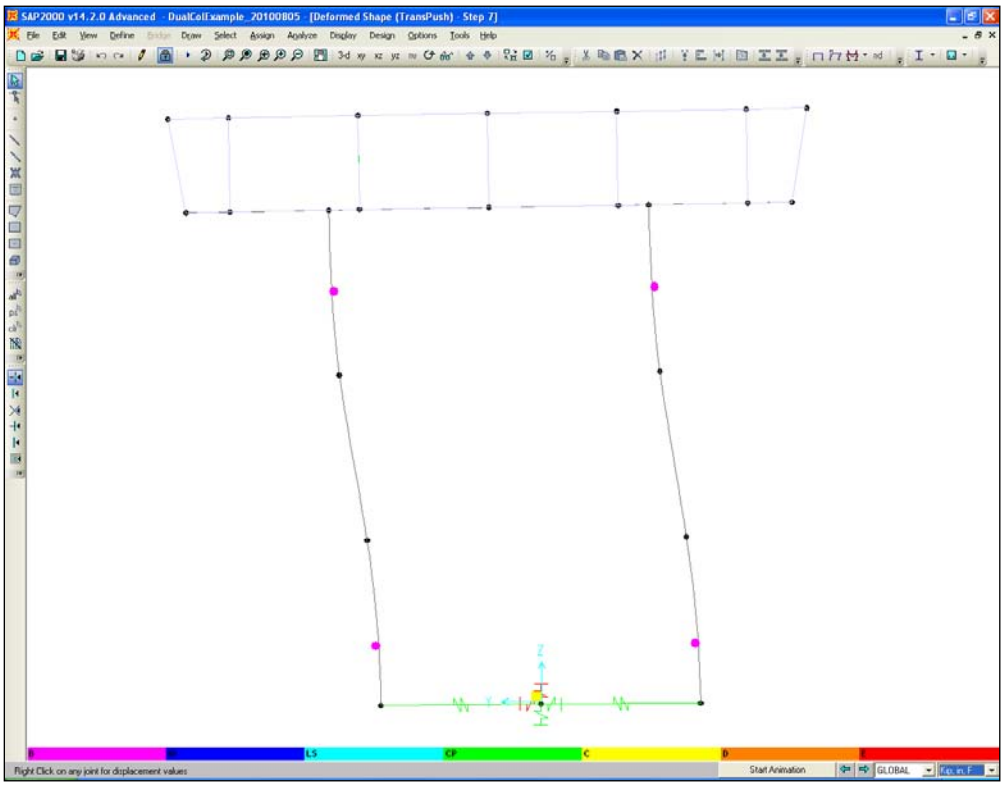

View of Deformed Shape for the Load Case "TransPush" at UY = 3.1 in.
Figure 4.2.3.2-5

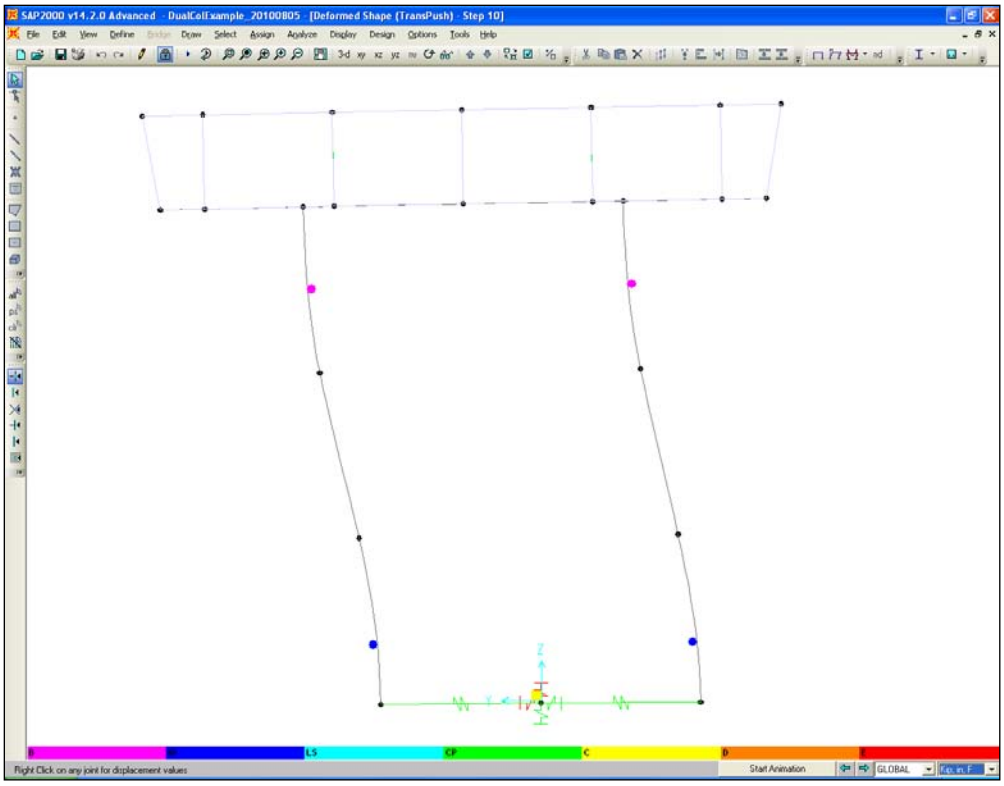

View of Deformed Shape for the Load Case "TransPush" at UY = 4.6 in.
Figure 4.2.3.2-6

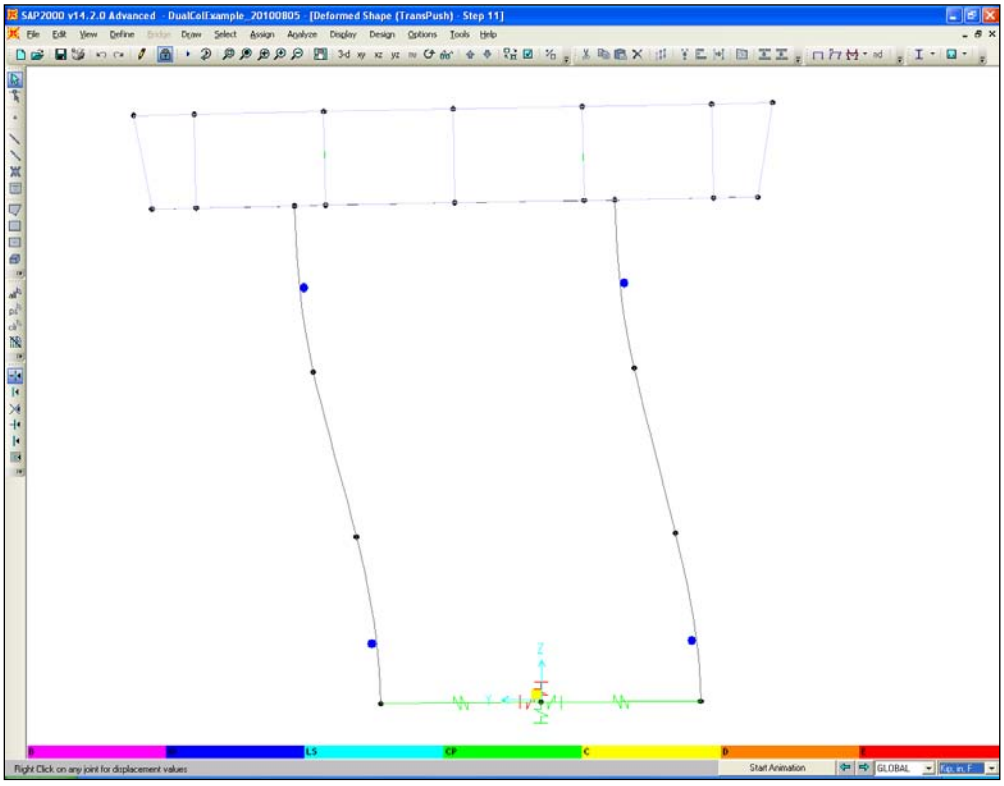

View of Deformed Shape for the Load Case "TransPush" at UY = 5.1 in.
Figure 4.2.3.2-7

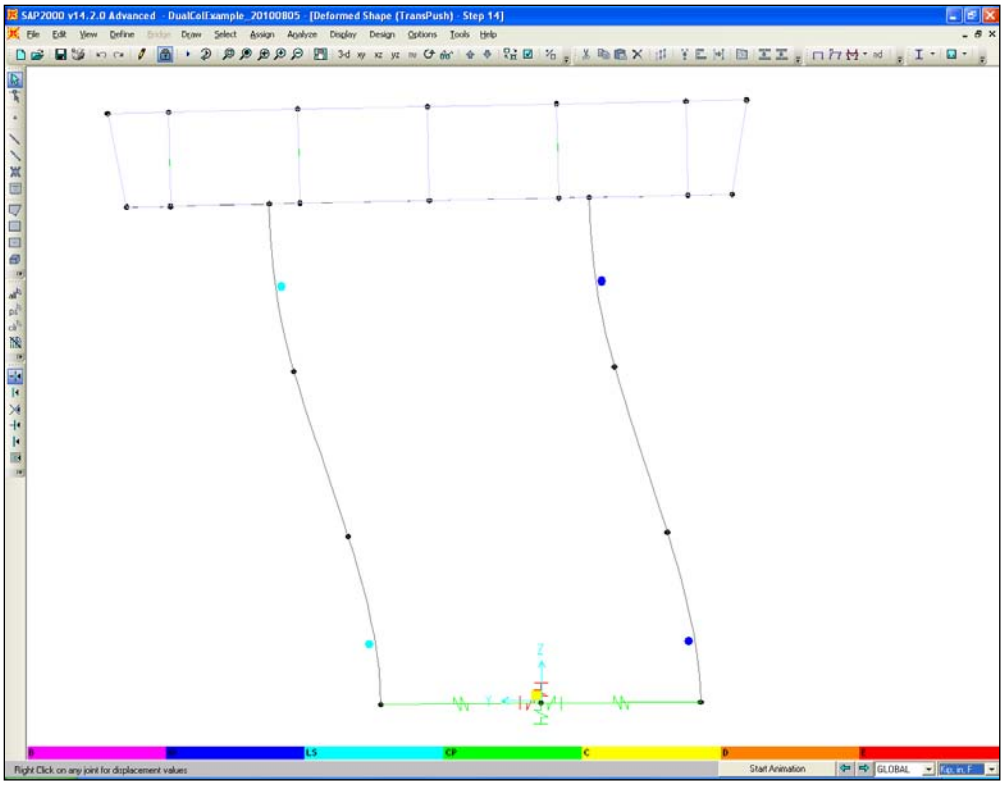

View of Deformed Shape for the Load Case "TransPush" at UY = 6.6 in.
Figure 4.2.3.2-8

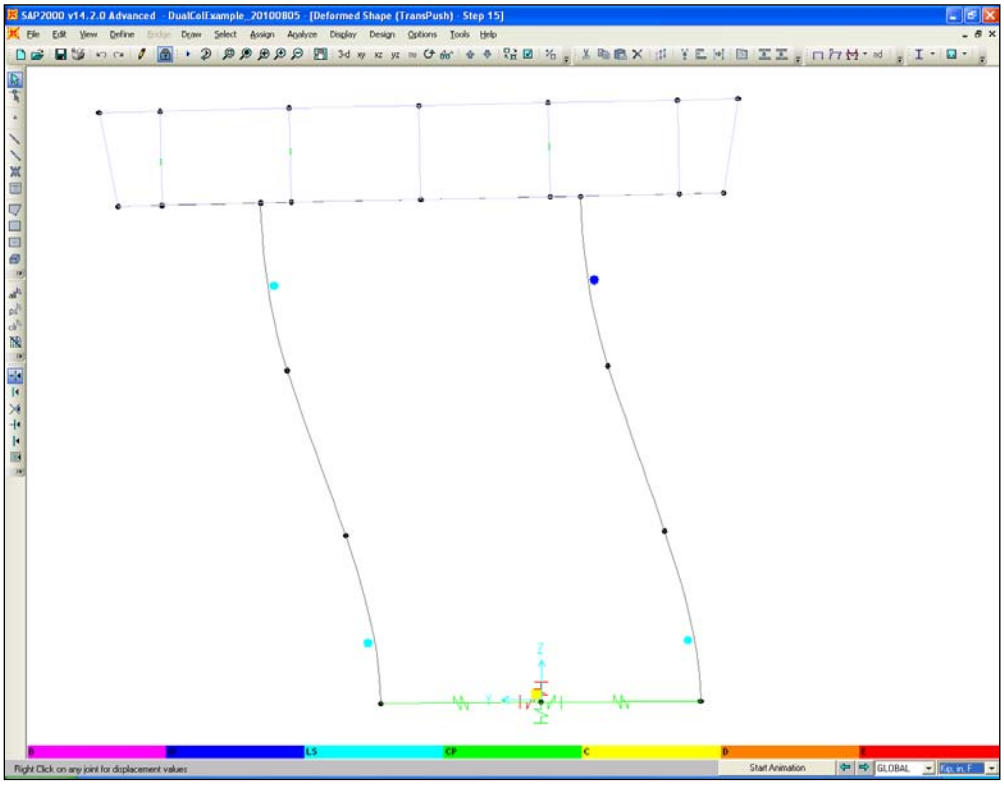

View of Deformed Shape for the Load Case "TransPush" at UY = 7.1 in.
Figure 4.2.3.2-9

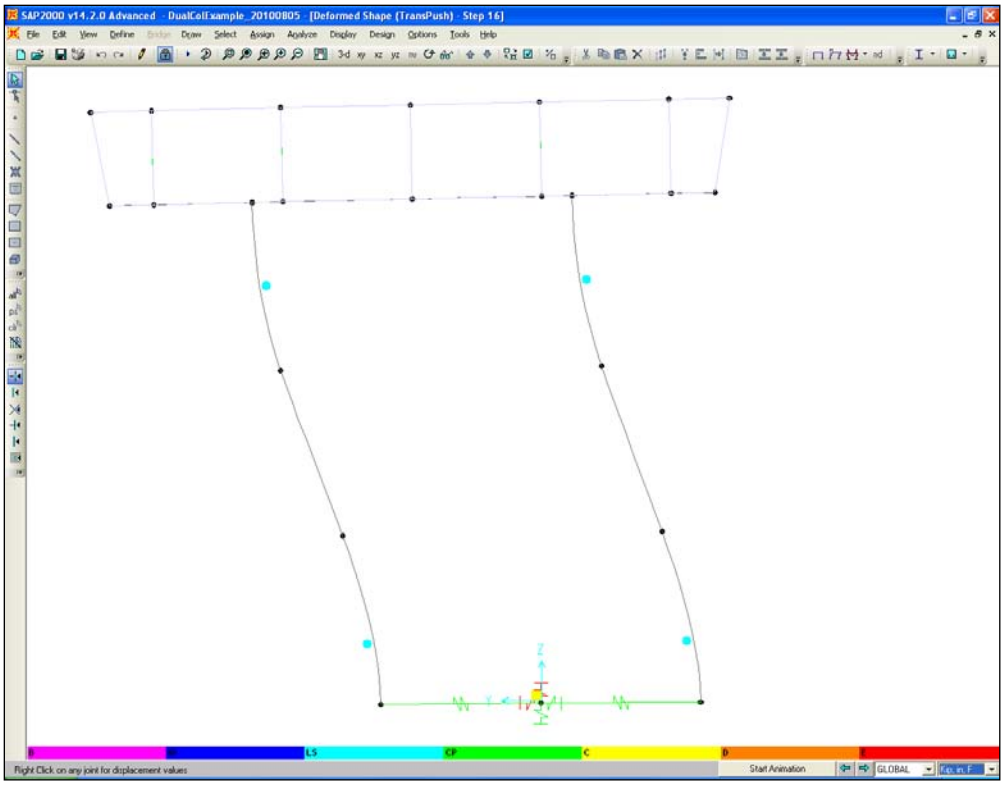

View of Deformed Shape for the Load Case "TransPush" at UY = 7.6 in.
Figure 4.2.3.2-10

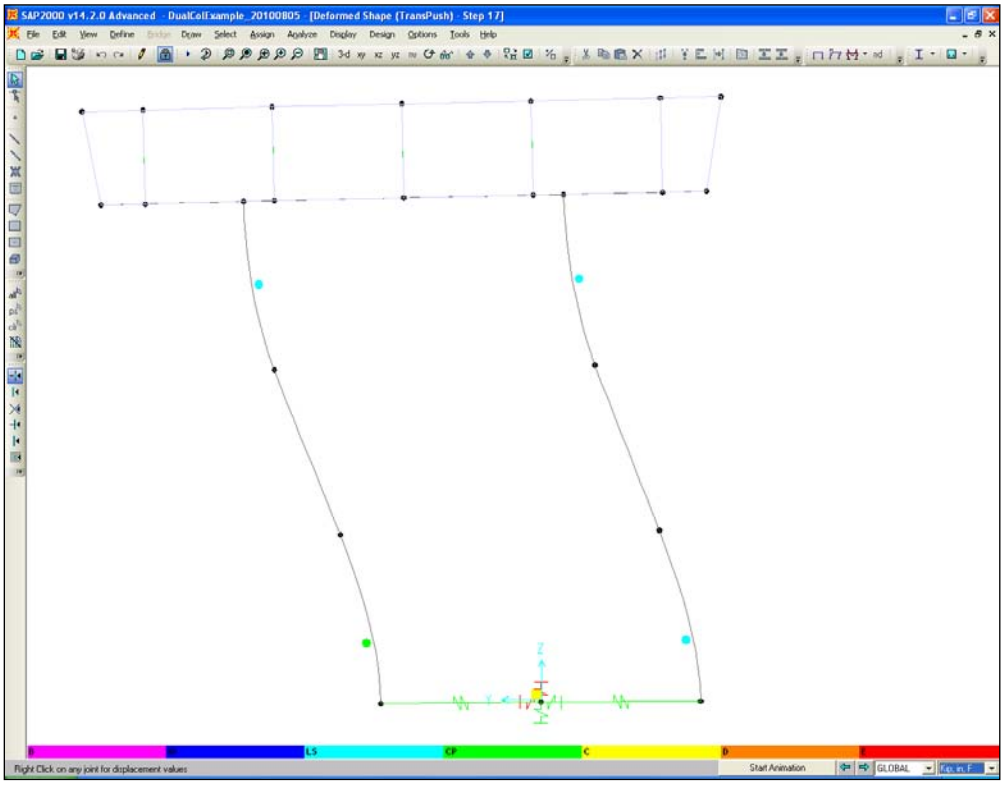

View of Deformed Shape for the Load Case "TransPush" at UY = 8.1 in.
Figure 4.2.3.2-11

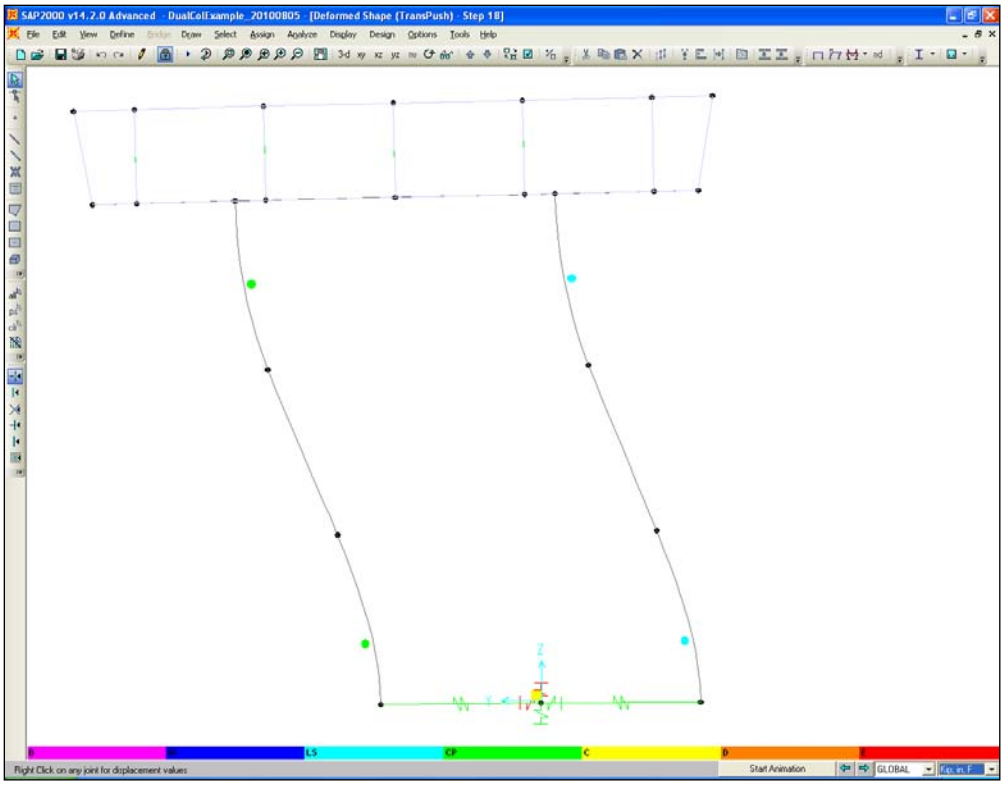

View of Deformed Shape for the Load Case "TransPush" at UY = 8.6 in.
Figure 4.2.3.2-12

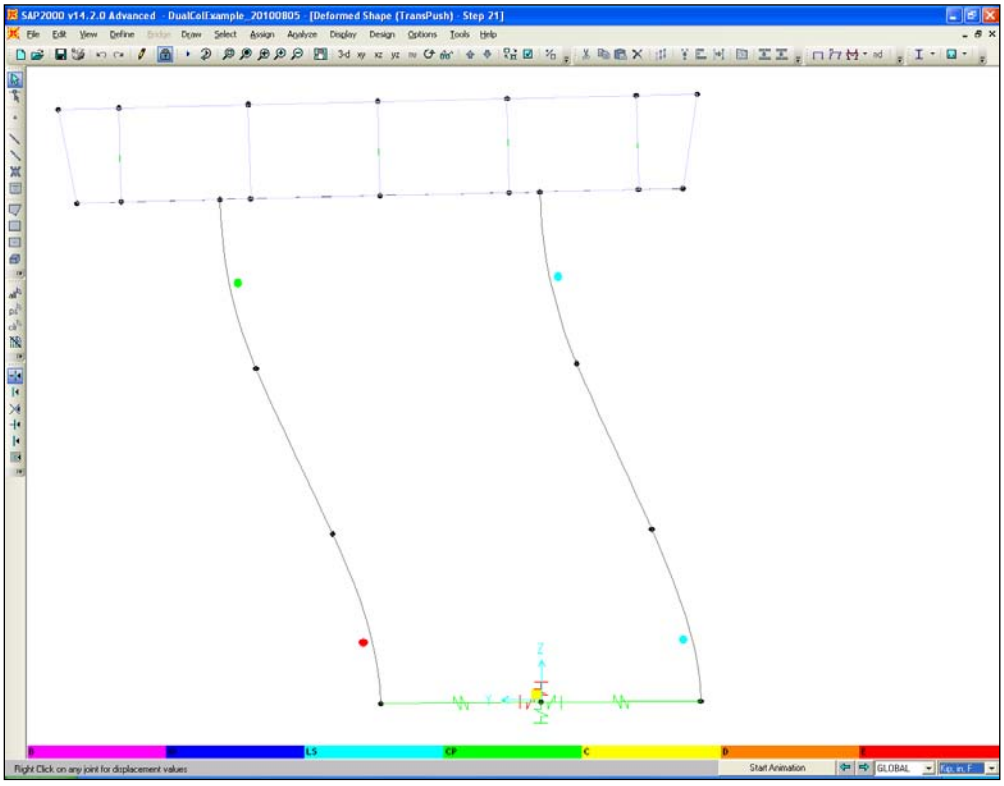

View of Deformed Shape for the Load Case "TransPush" at UY = 9.5 in.
Figure 4.2.3.2-13

5. Code Requirements

5.1 P-Δ Capacity Requirement Check

The requirements of section 4.11.5 of the *AASHTO Guide Specifications for LRFD Seismic Bridge Design* must be satisfied or a nonlinear time history analysis that includes P-Δ effects must be performed. The requirement is as follows:

$P_{dl}\Delta_r \leq 0.25\ M_p$

Where:

P_{dl} = unfactored dead load acting on the column (kip)
= 1,250 kips

Δ_r = relative lateral offset between the point of contraflexure and the furthest end of the plastic hinge (in.)
= Δ^L_D / 2 (Assumed since the inflection point is located at approximately mid-height of the column. If the requirements are not met, a more advanced calculation of Δ_r will be performed)

M_p = idealized plastic moment capacity of reinforced concrete column based upon expected material properties (kip-in.)
= 78,560 kip-in. (See Figure 3.1.2-1)

5.1.1 Longitudinal Direction

$0.25M_p$ = 0.25 * 78,560
= 19,640 kip-in.

Δ_r = $\Delta^L_{D\_Long}$ / 2
= 8.76 / 2
= 4.38 in.

$P_{dl}\Delta_r$ = 1,250 * 4.38
= 5,475 kip-in. < $0.25M_p$ = 19,640 kip-in. => Okay

5.1.2 Transverse Direction

Δ_r = $\Delta^L_{D\_Trans}$ / 2
= 6.07 / 2
= 3.04 in.

$P_{dl}\Delta_r$ = 1,250 kips * 3.04
= 3,800 kip-in. < $0.25M_p$ = 19,640 kip-in. => Okay

5.2 Minimum Lateral Strength Check

The requirements of Section 8.7.1 of the *AASHTO Guide Specifications for LRFD Seismic Bridge Design* must be satisfied. The requirement is as follows:

$M_{ne} \geq 0.1\ P_{trib}\ (H_h + 0.5\ D_s) / \Lambda$

Where:

M_{ne} = nominal moment capacity of the column based upon expected material properties as shown in Figure 8.5-1 of the *AASHTO Guide Specifications for LRFD Seismic Bridge Design* (kip-in.)

P_{trib} = greater of the dead load per column or force associated with the tributary seismic mass collected at the bent (kip)

H_h = the height from the top of the footing to the top of the column or the equivalent column height for a pile extension (in.)
= 34.0 * 12 (Top of footing to top of crossbeam)
= 408 in.

D_s = depth of superstructure (in.)
= 7.083 * 12
= 85 in.

Λ = fixity factor (See Section 4.8.1 of the *AASHTO Guide Specifications for LRFD Seismic Bridge Design*)
= 2 for fixed top and bottom

Determine P_{trib}:

Since the abutments are being modeled as free in the longitudinal direction, all of the seismic mass is collected at the bents in the longitudinal direction. Therefore, the force associated with the tributary seismic mass collected at the bent is greater than the dead load per column and is computed as follows:

P_{trib} = Weight of Structure / # of bents / # of columns per bent
= 6,638 / 2 / 2
= 1,660 kips

Note that a more sophisticated analysis to determine the tributary seismic mass would be necessary if the bridge were not symmetric and the bents did not have equal stiffness.

Determine M_{ne}:

Section 8.5 of the *AASHTO Guide Specifications for LRFD Seismic Bridge Design* defines M_{ne} as the expected nominal moment capacity based on the expected concrete and reinforcing steel strengths when the concrete strain reaches a magnitude of 0.003. Section Designer in SAP2000 can be used to determine M_{ne} by performing a moment-curvature analysis and displaying the moment when the concrete reaches a strain of 0.003. The moment-curvature diagram for the column section is shown in Figure 5.2-1 with values displayed at a concrete strain of 0.002989 (**Define menu > Section Properties > Frame Sections > *select* COL > *click* Modify/Show**

Property *button* > *click* Section Designer *button* > Display menu > Show Moment-Curvature Curve).

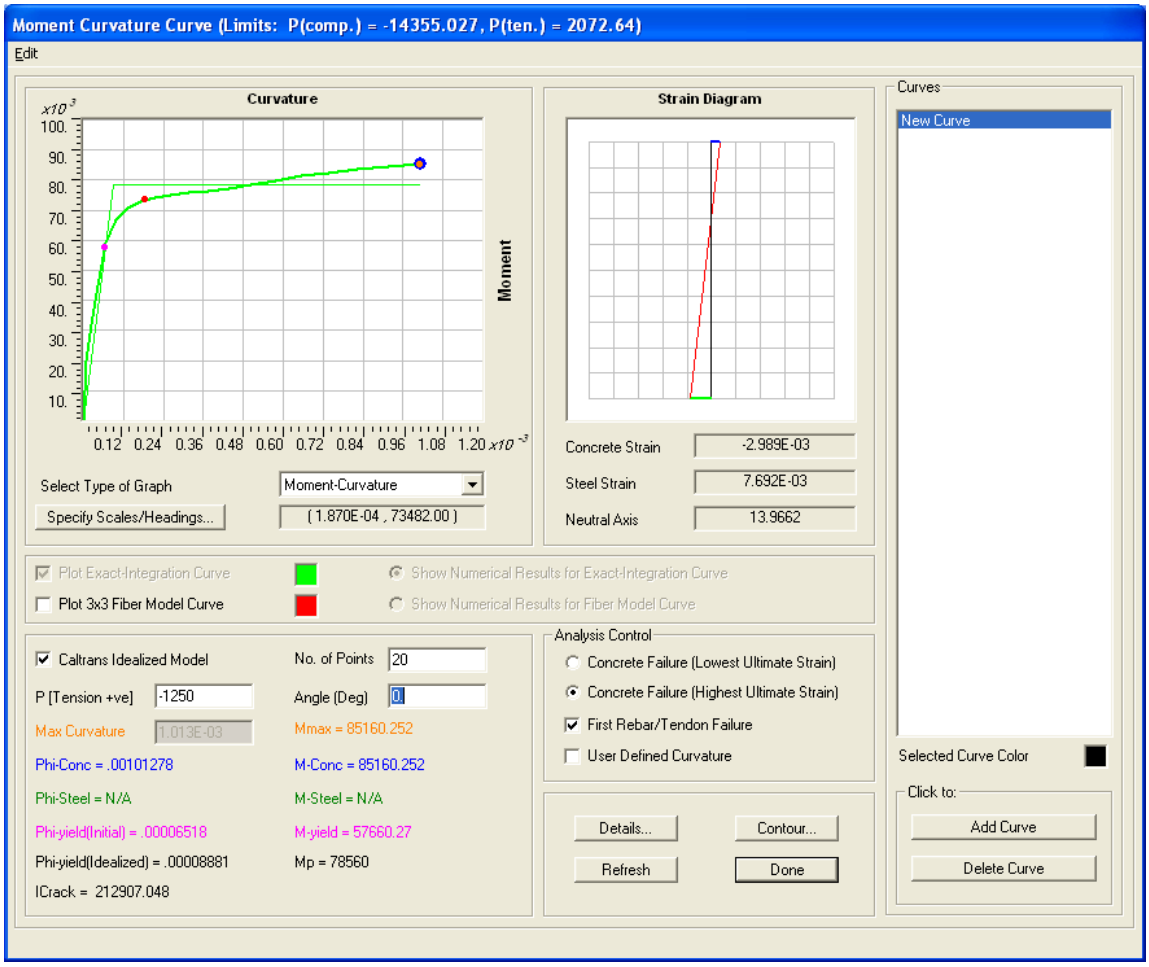

Moment-Curvature Curve for Frame Section "COL" at ε_c = 0.003
Figure 5.2-1

It is seen in Figure 5.2-1 that M_{ne} = 73,482 kip-inches.

Perform Check:

$0.1\ P_{trib}\ (H_h + 0.5\ D_s) / \Lambda$ = 0.1 * 1,660 * (408 + 0.5 * 85) / 2
= 37,392 kip-in. < 73,482 kip-in. = M_{ne} => Okay

5.3 Structure Displacement Demand/Capacity Check

The requirements of Section 4.8 of the *AASHTO Guide Specifications for LRFD Seismic Bridge Design* must be satisfied. The requirement is as follows:

$$\Delta^{L}_{D} < \Delta^{L}_{C}$$

Where:

Δ^{L}_{D} = displacement demand taken along the local principal axis of the ductile member (in.)

Δ^{L}_{C} = displacement capacity taken along the local principal axis corresponding to Δ^{L}_{D} of the ductile member (in.)

5.3.1 Longitudinal Direction

From section 3.3.2.1, the displacement demand in the longitudinal direction is $\Delta^{L}_{D\_Long} = 8.73$ inches.

Determine $\Delta^{L}_{C\_Long}$:

The displacement capacity can be determined from the pushover curve as show in Figure 5.3.1-1 (**Display menu > Show Static Pushover Curve**).

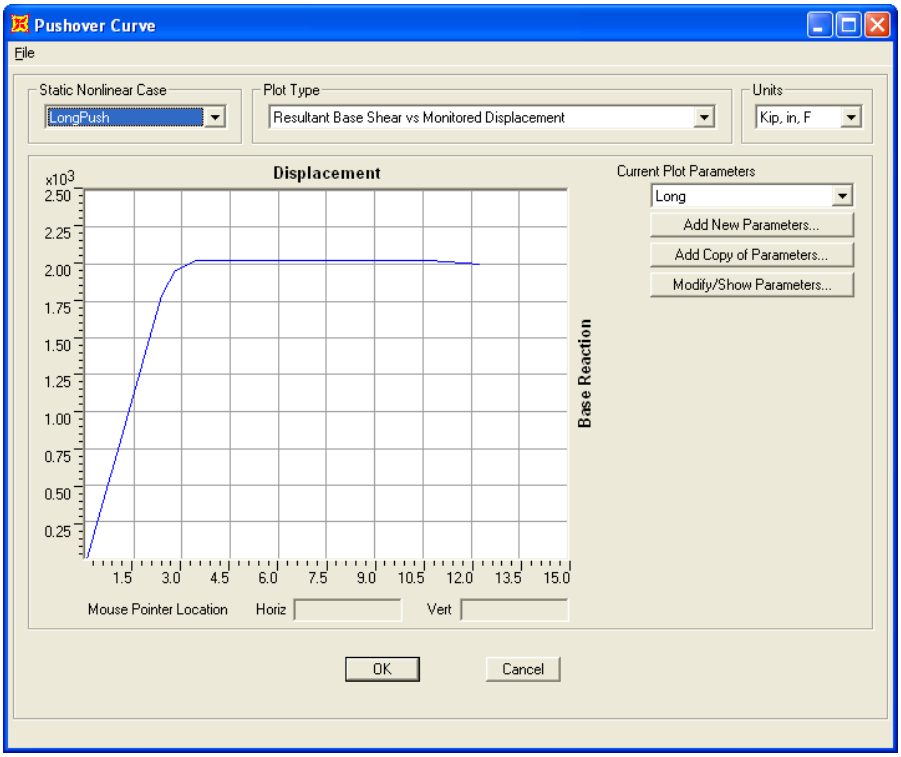

Pushover Curve for Load Case "LongPush"
Figure 5.3.1-1

The displacement at which the first hinge ruptures (fails) is the displacement capacity of the structure and is also the point at which the base shear begins to decrease. It can be seen in Figure 5.3.1-1 that the base shear does not decrease until a displacement of approximately 11 inches. This suggests the displacement capacity of the bridge in the longitudinal direction is greater than

the displacement demand. To confirm this, the table shown in Figure 5.3.1-2 can be displayed by clicking **File menu > Display Tables** in Figure 5.3.1-1.

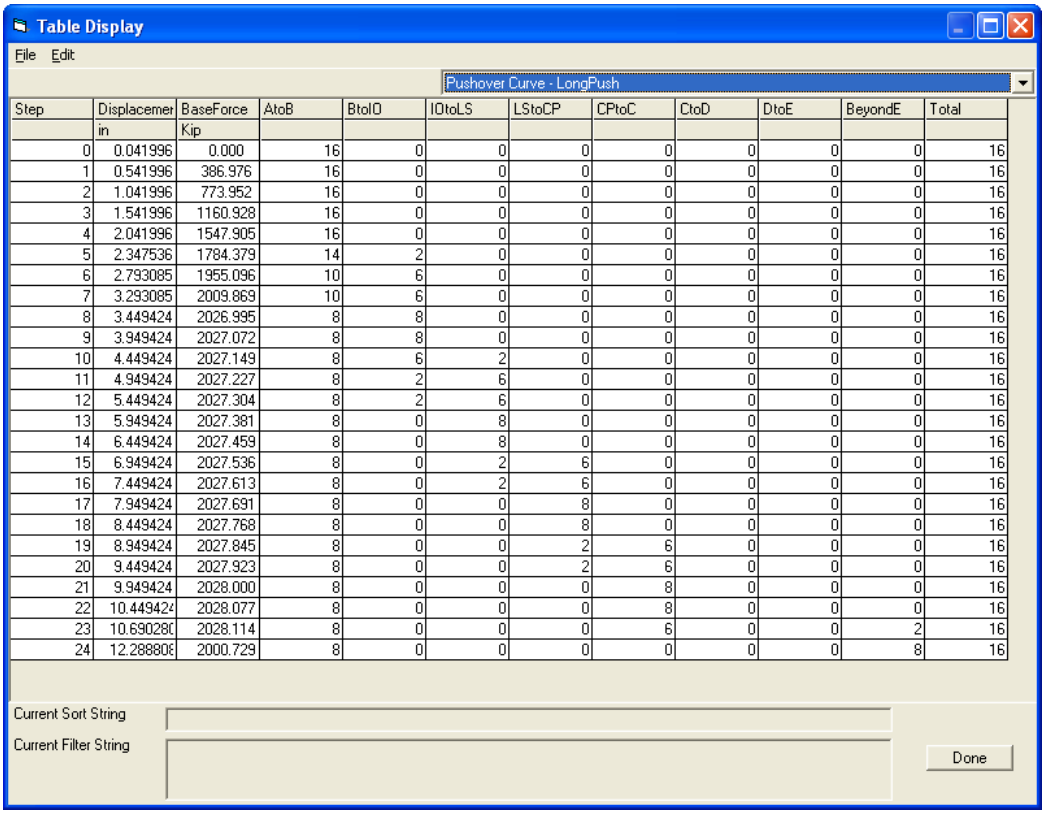

Table Display

File Edit

Pushover Curve - LongPush

Step	Displacemer	BaseForce	AtoB	BtoIO	IOtoLS	LStoCP	CPtoC	CtoD	DtoE	BeyondE	Total
	in	Kip									
0	0.041996	0.000	16	0	0	0	0	0	0	0	16
1	0.541996	386.976	16	0	0	0	0	0	0	0	16
2	1.041996	773.952	16	0	0	0	0	0	0	0	16
3	1.541996	1160.928	16	0	0	0	0	0	0	0	16
4	2.041996	1547.905	16	0	0	0	0	0	0	0	16
5	2.347536	1784.379	14	2	0	0	0	0	0	0	16
6	2.793085	1955.096	10	6	0	0	0	0	0	0	16
7	3.293085	2009.869	10	6	0	0	0	0	0	0	16
8	3.449424	2026.995	8	8	0	0	0	0	0	0	16
9	3.949424	2027.072	8	8	0	0	0	0	0	0	16
10	4.449424	2027.149	8	6	2	0	0	0	0	0	16
11	4.949424	2027.227	8	2	6	0	0	0	0	0	16
12	5.449424	2027.304	8	2	6	0	0	0	0	0	16
13	5.949424	2027.381	8	0	8	0	0	0	0	0	16
14	6.449424	2027.459	8	0	8	0	0	0	0	0	16
15	6.949424	2027.536	8	0	2	6	0	0	0	0	16
16	7.449424	2027.613	8	0	2	6	0	0	0	0	16
17	7.949424	2027.691	8	0	0	8	0	0	0	0	16
18	8.449424	2027.768	8	0	0	8	0	0	0	0	16
19	8.949424	2027.845	8	0	0	2	6	0	0	0	16
20	9.449424	2027.923	8	0	0	2	6	0	0	0	16
21	9.949424	2028.000	8	0	0	0	8	0	0	0	16
22	10.44942	2028.077	8	0	0	0	8	0	0	0	16
23	10.69028	2028.114	8	0	0	0	6	0	0	2	16
24	12.28880	2000.729	8	0	0	0	0	0	0	8	16

Current Sort String

Current Filter String

Done

Pushover Curve Tabular Data for Load Case "LongPush"
Figure 5.3.1-2

Figure 5.3.1-2 shows the step, displacement, base force, and hinge state data for the longitudinal pushover analysis. By definition, hinges fail if they are in the "Beyond E" hinge state. In Figure 5.3.1-2 it can be seen that step 23 is the first step any hinges reach the "Beyond E" hinge state. Therefore, $\Delta^{L}_{C\_Long}$ = 10.69 inches and the following can be stated:

$\Delta^{L}_{C\_Long}$ = 10.69 in. > $\Delta^{L}_{D\_Long}$ = 8.76 in. => Longitudinal Displacement Demand/Capacity is Okay

5.3.2 Transverse Direction

From Section 3.3.2.2 of this example, the displacement demand in the transverse direction is $\Delta^{L}_{D\_Trans}$ = 6.07 inches.

Determine $\Delta^{L}_{C\_Trans}$:

The displacement capacity can be determined from the pushover curve as show in Figure 5.3.2-1 (**Display menu > Show Static Pushover Curve**).

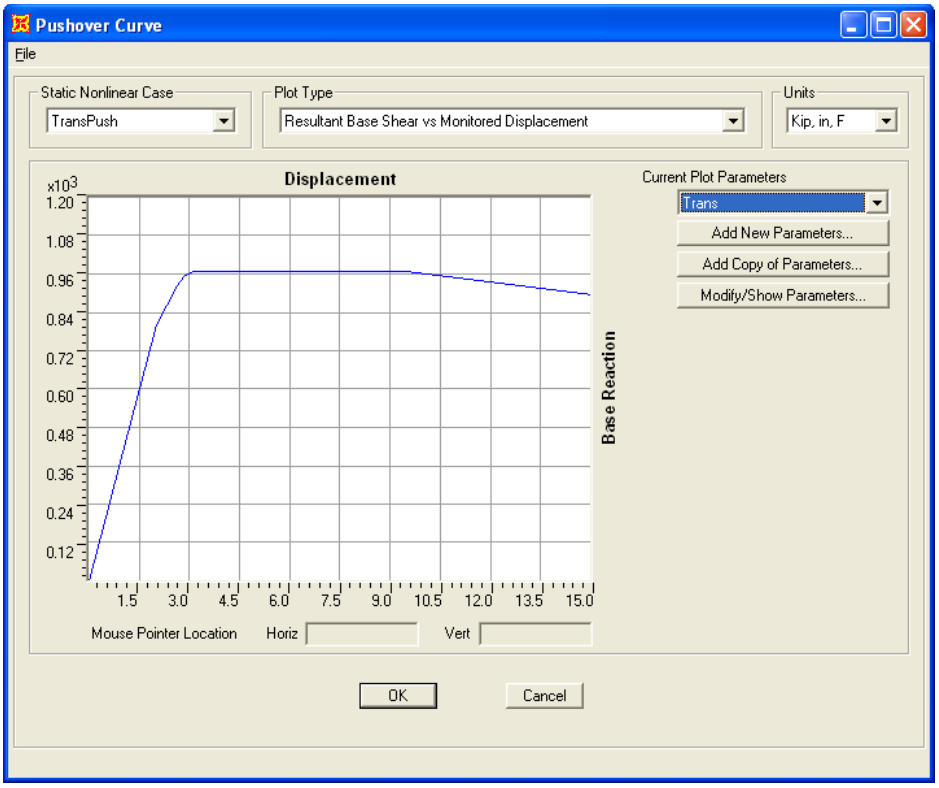

Pushover Curve for Load Case "TransPush"
Figure 5.3.2-1

As mentioned above, the displacement at which the first plastic hinge ruptures (fails) is the displacement capacity of the structure and is also the point at which the base shear begins to decrease. It can be seen in Figure 5.3.2-1 that the base shear does not decrease until a displacement of approximately 9.5 inches. This suggests the displacement capacity of the bridge in the transverse direction is greater than the displacement demand. To confirm this, the table shown in Figure 5.3.2-2 can be displayed by clicking **File menu > Display Tables** in Figure 5.3.2-1.

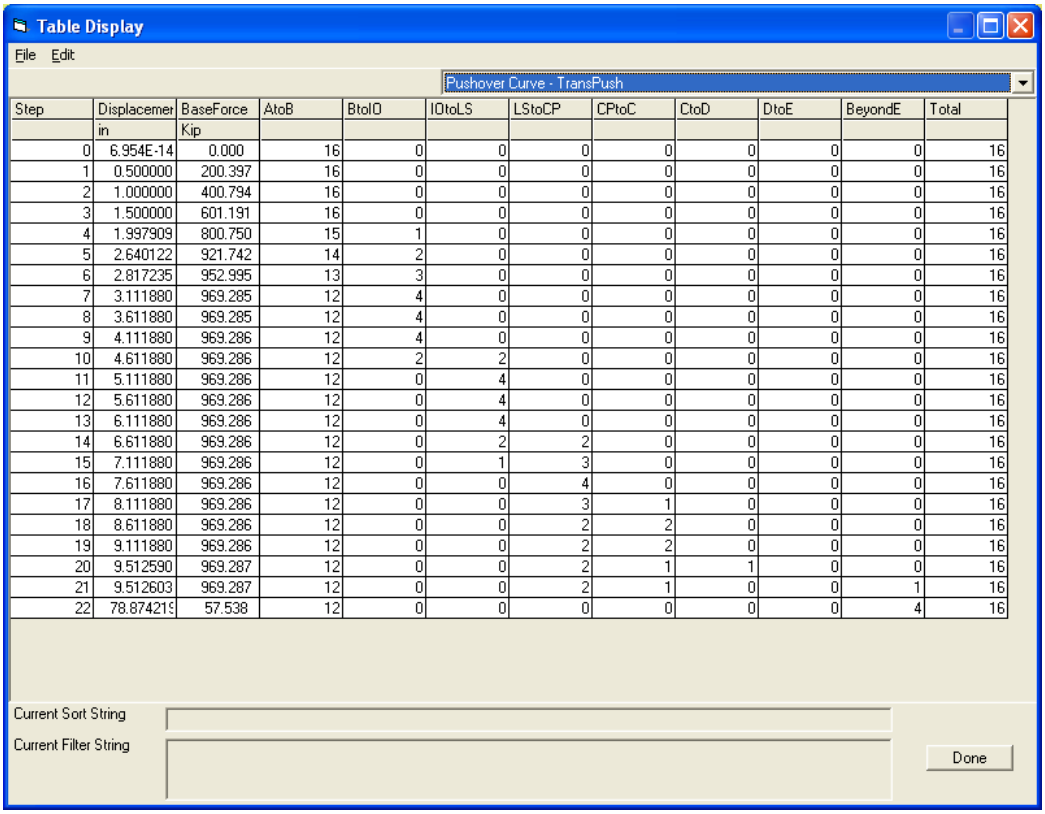

Table Display

File Edit

Pushover Curve - TransPush

Step	Displacemer	BaseForce	AtoB	BtoIO	IOtoLS	LStoCP	CPtoC	CtoD	DtoE	BeyondE	Total
	in	Kip									
0	6.954E-14	0.000	16	0	0	0	0	0	0	0	16
1	0.500000	200.397	16	0	0	0	0	0	0	0	16
2	1.000000	400.794	16	0	0	0	0	0	0	0	16
3	1.500000	601.191	16	0	0	0	0	0	0	0	16
4	1.997909	800.750	15	1	0	0	0	0	0	0	16
5	2.640122	921.742	14	2	0	0	0	0	0	0	16
6	2.817235	952.995	13	3	0	0	0	0	0	0	16
7	3.111880	969.285	12	4	0	0	0	0	0	0	16
8	3.611880	969.285	12	4	0	0	0	0	0	0	16
9	4.111880	969.286	12	4	0	0	0	0	0	0	16
10	4.611880	969.286	12	2	2	0	0	0	0	0	16
11	5.111880	969.286	12	0	4	0	0	0	0	0	16
12	5.611880	969.286	12	0	4	0	0	0	0	0	16
13	6.111880	969.286	12	0	4	0	0	0	0	0	16
14	6.611880	969.286	12	0	2	2	0	0	0	0	16
15	7.111880	969.286	12	0	1	3	0	0	0	0	16
16	7.611880	969.286	12	0	0	4	0	0	0	0	16
17	8.111880	969.286	12	0	0	3	1	0	0	0	16
18	8.611880	969.286	12	0	0	2	2	0	0	0	16
19	9.111880	969.286	12	0	0	2	2	0	0	0	16
20	9.512590	969.287	12	0	0	2	1	1	0	0	16
21	9.512603	969.287	12	0	0	2	1	0	0	1	16
22	78.87421	57.538	12	0	0	0	0	0	0	4	16

Current Sort String

Current Filter String

Done

Pushover Curve Tabular Data for Load Case "TransPush"
Figure 5.3.2-2

Figure 5.3.2-2 shows the step, displacement, base force, and hinge state data for the transverse pushover analysis. Recall the transverse pushover analysis only includes a single bent. By definition, hinges fail if they are in the "Beyond E" hinge state. In Figure 5.3.2-2 it can be seen that step 21 is the first step any hinges reach the "Beyond E" hinge state. Therefore, $\Delta^{L}_{C\_Trans}$ = 9.51 inches and the following can be stated:

$\Delta^{L}_{C\_Trans}$ = 9.51 in. > $\Delta^{L}_{D\_Trans}$ = 6.07 in. => Transverse Displacement Demand/Capacity is Okay

5.4 Member Ductility Requirement Check

The requirements for hinge ductility demands in Section 4.9 of the *AASHTO Guide Specifications for LRFD Seismic Bridge Design* must be met for all hinges in the structure. The member ductility demand may be computed as follows:

$\mu_D \leq 6$ (for multiple column bents)

Where:

μ_D = ductility demand
$= 1 + \Delta_{pd} / \Delta_{yi}$

Δ_{yi} = idealized yield displacement (does not include soil effects) (in.)
$= \varphi_{yi} * L^2 / 3$

L = length from point of maximum moment to the inflection point (in.)

φ_{yi} = idealized yield curvature (1/in.)

Δ_{pd} = plastic displacement demand (in.)
$= \theta_{pd} * (L - 0.5*L_p)$

θ_{pd} = plastic rotation demand determined by SAP2000 (rad.)

L_p = plastic hinge length (in.)

Therefore:

$\mu_D = 1 + 3 * [\theta_{pd} / (\varphi_{yi} * L)] * (1 - 0.5 * L_p / L)$

This example will explicitly show how to compute the ductility demand for the lower hinge of the trailing column being deflected in the transverse direction. The ductility demands for the remaining hinges are presented in tabular format.

Determine L:

The locations of the inflection points were approximated previously to determine the hinge lengths. However, now that the pushover analysis has been performed, the actual inflection points can be determined.

Figure 5.3.2-2 shows that at step 13 the displacement is 6.11 inches, which is slightly greater than the displacement demand. Figure 5.4-1 shows the column moment 2-2 diagram at step 13 of the TransPush load case as displayed in SAP2000 (**Display menu > Show Forces/Stresses > Frames/Cables >** ***select*** **TransPush >** ***select*** **Moment 2-2 >** ***select*** **Step 13 >** ***click*** **OK** ***button***).

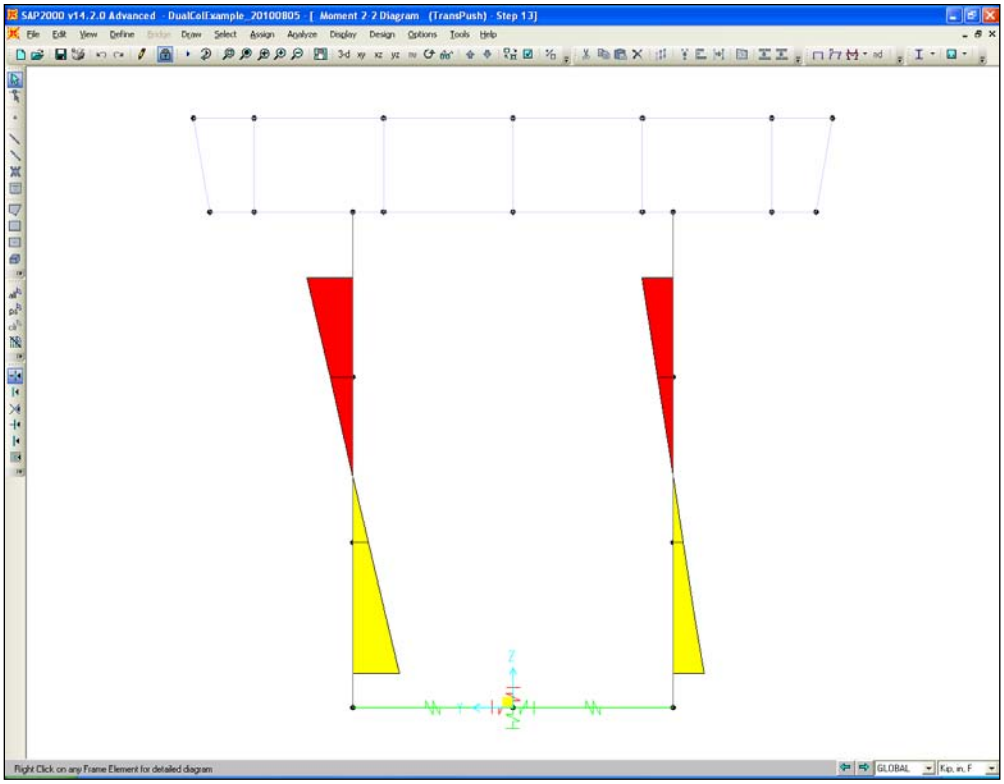

Frame Moment 2-2 Diagram for Load Case "TransPush" at Step 13
Figure 5.4-1

From this information it is found that the inflection point is 59 inches above the lower joint on the middle column element and the following is computed:

L = Length from point of maximum moment at base of column to inflection point
= Length of Lower Element – Footing Offset + 59
= 146 – 30 + 59
= 175 in.

Determine θ_{pd}:

Since the displacement of the bent at step 13 is greater than the displacement demand, the plastic rotation at step 13 is greater than or equal to the plastic rotation demand. The plastic rotation at each step can be found directly from the hinge results in SAP2000. The name of the lower hinge on the trailing column is 1H1. Figure 5.4-2 shows the plastic rotation plot of hinge 1H1 at step 13 of the TransPush load case (**Display menu > Show Hinge Results >** ***select hinge*** **1H1 (Auto P-M2) >** ***select load case*** **TransPush >** ***select step*** **13 >** ***click*** **OK** ***button***).

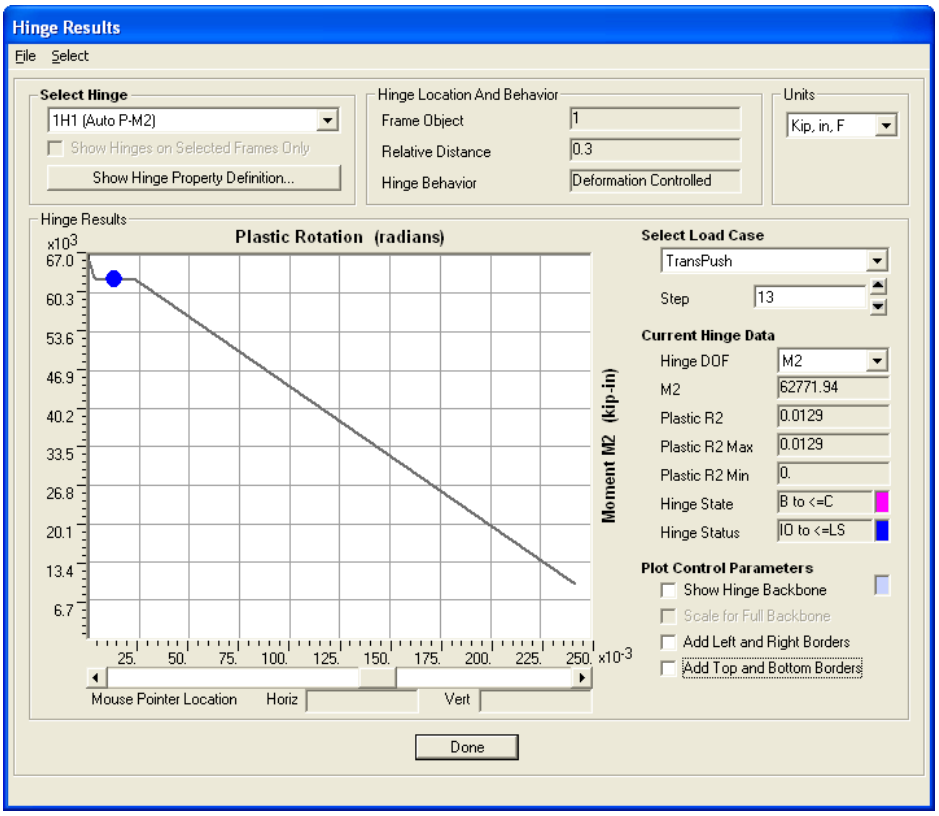

Hinge "1H1" Plastic Rotation Results for Load Case "TransPush" at Step 13
Figure 5.4-2

Figure 5.4-2 shows that the plastic rotation for hinge 1H1 is 0.0129 radians. Therefore θ_{pd} = 0.0129 radians.

Determine φ_{yi}:

The idealized yield curvature will be found by determining the axial load in the hinge at first yield and then inputting that load into Section Designer. The axial load at yield can be found by viewing the hinge results at step 4 (when the hinge first yields). Figure 5.4-3 shows the axial plastic deformation plot of hinge 1H1 at step 4 of the TransPush load case (**Display menu > Show Hinge Results >** ***select hinge*** **1H1 (Auto P-M2) >** ***select load case*** **TransPush >** ***select step*** **4 >** ***select hinge DOF*** **P >** ***click*** **OK** ***button***).

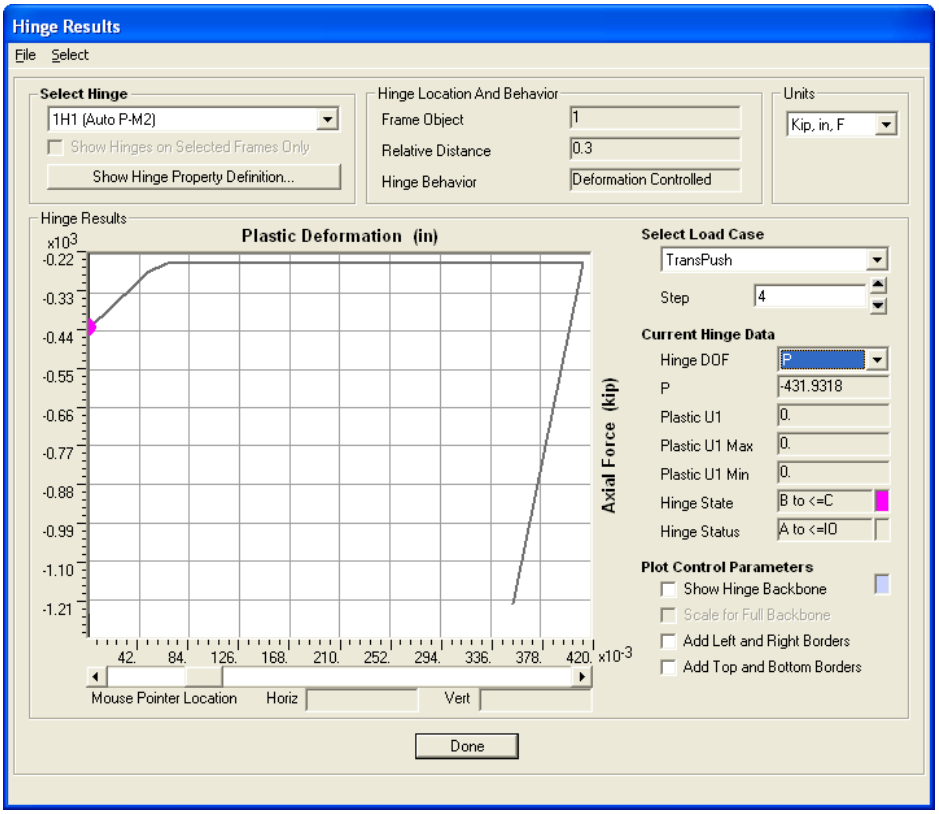

Hinge "1H1" Axial Plastic Deformation Results for Load Case "TransPush" at Step 4

Figure 5.4-3

Figure 5.4-3 shows that the axial load in hinge 1H1 at step 4 of the TransPush load case is -432 kips. That load can now be entered into Section Designer to determine the idealized yield curvature, φ_{yi}. The moment-curvature diagram for the column section with P = -432 kips is shown in Figure 5.4-4 (**Define menu > Section Properties > Frame Sections > *select* COL > *click* Modify/Show Property *button* > *click* Section Designer *button* > Display menu > Show Moment-Curvature Curve**).

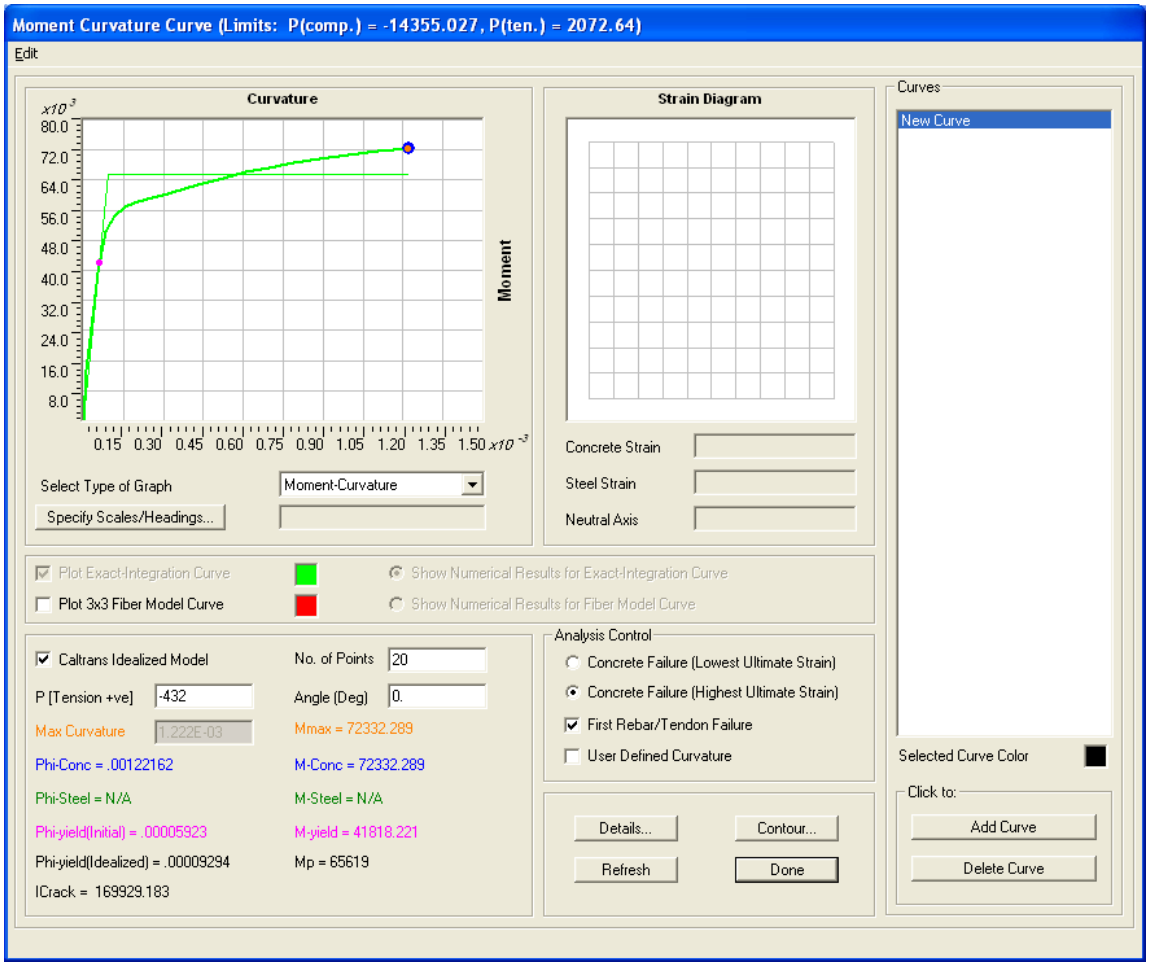

Moment-Curvature Curve for Frame Section "COL" at P = -432 kips
Figure 5.4-4

Figure 5.4-4 shows that Phi-yield(Idealized) = .00009294. Therefore: $\varphi_{yi} = 0.00009294$ inches^{-1}.

The ductility demand in the transverse direction for the lower hinge in the trailing column can now be calculated as follows:

$$\mu_D = 1 + 3 * [\theta_{pd} / (\varphi_{yi} * L)] * (1 - 0.5 * L_p / L)$$

Where:

$L = 175$ in.

$\varphi_{yi} = 0.00009294$ in.$^{-1}$

$\theta_{pd} = 0.0129$ rad.

$L_p = 27.0$ in.

Therefore:

$$\mu_D = 1 + 3 * [0.0129 / (0.00009294 * 175)] * (1 - 0.5 * 27.0 / 175)$$
$$= 3.2 < 6 \Rightarrow \text{okay}$$

The ductility demands and related values for all column hinges are shown in Table 5.4-1.

Pushover Direction	Column and Hinge Location	Hinge Name	Yield Step	Axial Load at Yield	φ_{yi}	θ_{pd}	L_p	L	μ_D
(Long/Trans)	(-)	(-)	(#)	(kips)	(1/in.)	(rad.)	(in.)	(in.)	(-)
Longitudinal	Trailing Lower	1H2	5	-1222	.0000889	.0207	27.0	175	4.7
Longitudinal	Trailing Upper	3H2	6	-1135	.00008926	.0204	26.9	175	4.6
Longitudinal	Leading Lower	7H2	6	-1354	.00008851	.0195	27.0	175	4.5
Longitudinal	Leading Upper	9H2	8	-1277	.0000887	.0168	26.9	175	4.0
Transverse	Trailing Lower	1H1	4	-432	.00009294	.0129	27.0	175	3.2
Transverse	Trailing Upper	3H1	5	-305	.00009292	.0118	26.9	175	3.0
Transverse	Leading Lower	4H1	6	-2226	.00009185	.0104	27.0	175	2.8
Transverse	Leading Upper	6H1	7	-2253	.00009186	.00902	26.9	175	2.6

Ductility Demands for All Column Hinges
Table 5.4-1

Table 5.4-1 shows that all hinge ductility demands are less than 6.

5.5 Column Shear Demand/Capacity Check

The column shear requirements in Section 8.6 of the *AASHTO Guide Specifications for LRFD Seismic Bridge Design* must be met for all columns in the structure.

$$\varphi_s V_n \geq V_u$$

Where:

φ_s = 0.9
V_n = nominal shear capacity (kips)
= $V_c + V_s$

Concrete Shear Capacity:

V_c = concrete contribution to shear capacity (kips)
= $v_c A_e$

Where:

A_e = 0.8 A_g
A_g = gross area of member cross-section (in.^{2})

v_c if P_u is compressive:

$$v_c = 0.032\ \alpha' \left[1 + P_u / (2\ A_g)\right] f'_c{}^{1/2} \leq \min\left(0.11\ f'_c{}^{1/2},\ 0.047\ \alpha'\ f'_c{}^{1/2}\right)$$

v_c otherwise:

v_c = 0

For circular columns with spiral reinforcing:

$$0.3 \leq \alpha' = f_s / 0.15 + 3.67 - \mu_D \leq 3$$

$f_s = \rho_s f_{yh} \leq 0.35$
$\rho_s = (4\ A_{sp}) / (s\ D')$

Where:

P_u = ultimate compressive force acting on section (kips)
A_{sp} = area of spiral (in.^{2})
s = pitch of spiral (in.)
D' = diameter of spiral (in.)
f_{yh} = nominal yield stress of spiral (ksi)
f'_c = nominal concrete strength (ksi)
μ_D = maximum local ductility demand of member

Steel Shear Capacity:

V_s = steel contribution to shear capacity (kips)
$V_s = (\pi / 2)\ (A_{sp}\ f_{yh}\ D') / s$

This example will explicitly show how to perform the shear demand/capacity check for the trailing column being deflected in the transverse direction. The shear demand/capacity checks for the remaining columns are presented in tabular format.

Determine V_u:

Figure 5.5-1 shows the column shear diagram for the TransPush load case as displayed in SAP2000 (**Display menu > Show Forces/Stresses > Frames/Cables >** ***select*** **TransPush >** ***select*** **Shear 3-3 >** ***select*** **Step 13 >** ***click*** **OK** ***button***).

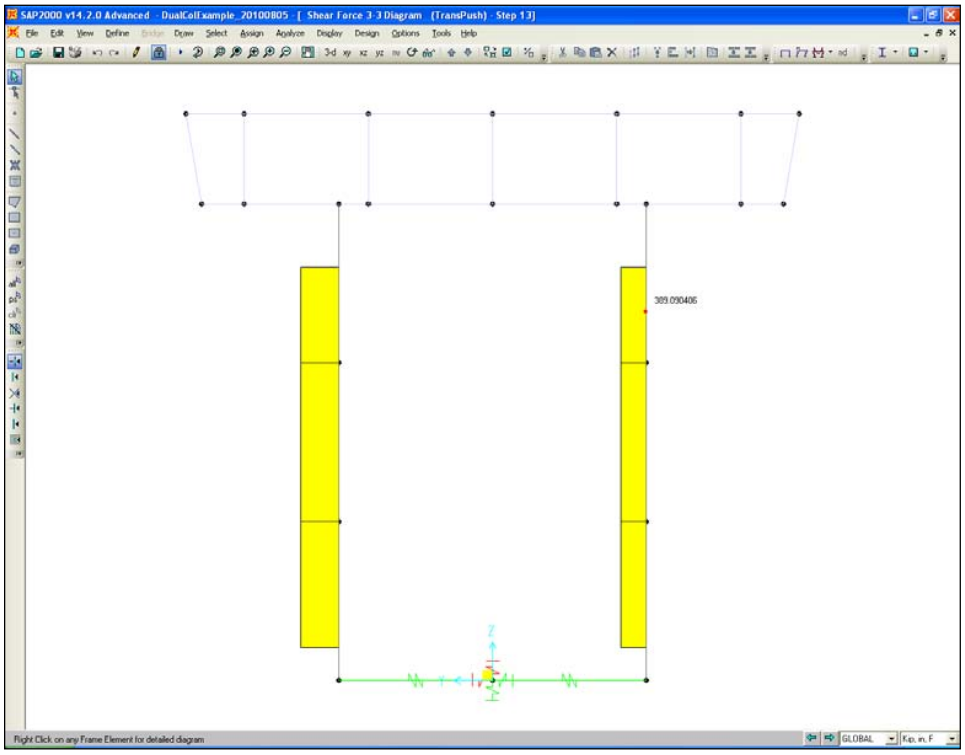

Frame Shear 3-3 Diagram for Load Case "TransPush" at Step 13
Figure 5.5-1

From Figure 5.5-1 it is determined that the plastic shear in the trailing column is 389 kips. Section 8.6.1 states that V_u shall be determined on the basis of V_{po}, which is the shear associated with the overstrength moment, M_{po}, defined in Section 8.5 of the *AASHTO Guide Specifications for LRFD Seismic Bridge Design*. For ASTM A 706 reinforcement the overstrength magnifier is 1.2, and so the shear for the SAP2000 model must be multiplied by this factor.

Therefore:

$V_u = \lambda_{mo} V_p$

Where:

$\lambda_{po} = 1.2$
$V_p = 389$ kips

and

$V_u = 1.2 * 389$
$= 467$ kips

Determine V_c:

Figure 5.5-2 shows the column axial load diagram for the TransPush load case as displayed in SAP2000 (**Display menu > Show Forces/Stresses > Frames/Cables >** ***select*** **TransPush >** ***select*** **Axial Force >** ***select*** **Step 13 >** ***click*** **OK** ***button***).

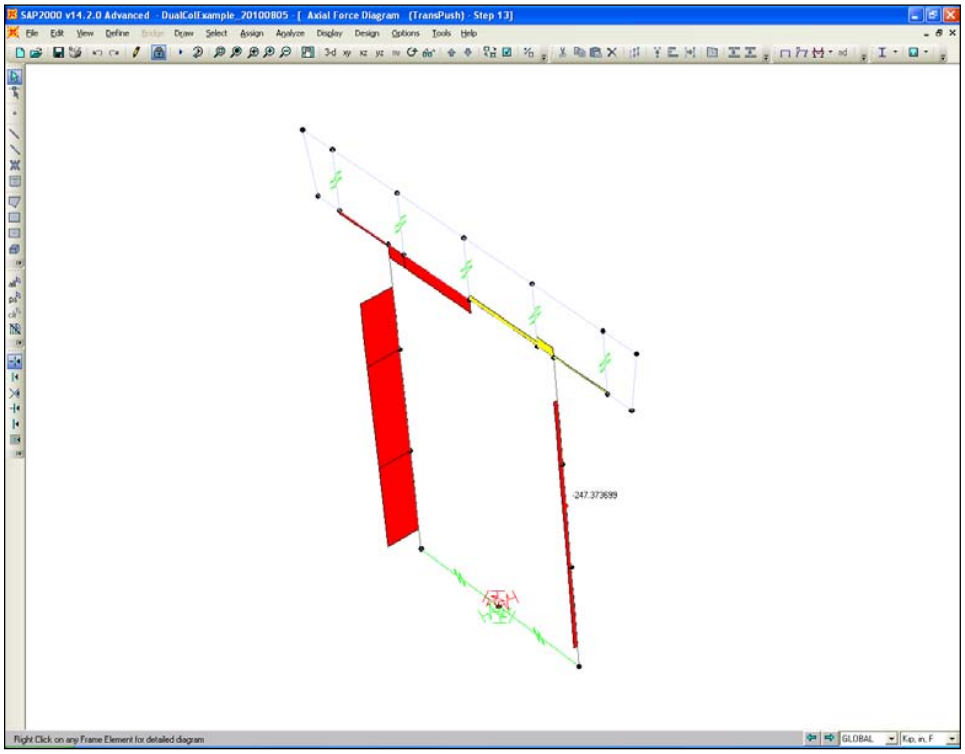

Frame Axial Force Diagram for Load Case "TransPush" at Step 13
Figure 5.5-2

From Figure 5.5-2 it is determined that the axial force in the trailing column is -247 kips.

Therefore:

P_u = 247 kips

A_g = $\pi * 60^2 / 4$
= 2827.4 in.^{2}

A_e = $0.8\ A_g$
= 0.8 * 2827.4
= 2262 in.^{2}

A_{sp} = 0.44 in.^{2}

s = 3.5 in.

D' = 60 – 1.5 – 1.5 – 0.75
= 56.25 in.

f_{yh} = 60 ksi

f'_c = 4 ksi

ρ_s = $(4\ A_{sp}) / (s\ D')$
= (4 * 0.44) / (3.5 * 56.25)
= 0.0089

f_s = $\rho_s f_{yh} \leq 0.35$
= $0.0089 * 60 \leq 0.35$
= $0.54 \leq 0.35$
= 0.35 ksi

μ_D = 3.2 (see Section 5.4 of this example)

$0.3 \le \alpha'$ $= f_s / 0.15 + 3.67 - \mu_D \le 3$
$= 0.35 / 0.15 + 3.67 - 3.2 \le 3$
$= 0.35 / 0.15 + 3.67 - 3.2 \le 3$
$= 2.8 \le 3$

α' = 2.8

v_c $= 0.032\ \alpha' [1 + P_u / (2\ A_g)] f'_c{}^{1/2} \le \min (0.11\ f'_c{}^{1/2} , 0.047\ \alpha' f'_c{}^{1/2})$
$= 0.032 * 2.8 * [1 + 247 / (2 * 2827.4)] 4^{1/2} \le \min (0.11 * 4^{1/2}, 0.047 * 2.8 * 4^{1/2})$
$= 0.187 \le \min (0.22 , 0.263)$
$= 0.187$ ksi

V_c $= v_c A_e$
$= 0.187 * 2262$
$= 423$ kips

Determine V_s:

V_s $= (\pi / 2) (A_{sp}\ f_{yh}\ D') / s$
$= (\pi / 2) (0.44 * 60 * 56.25) / 3.5$
$= 666$ kips

Determine $\varphi_s V_n$:

$\varphi_s V_n$ $= \varphi_s (V_c + V_s)$
$= 0.9 * (423 + 666)$
$= 980$ kips $> V_u = 467$ kips => okay

The shear demands and capacities and related values for all columns are shown in Table 5.5-1.

Pushover Direction	Column	V_p	V_u	P_u	μ_D	α'	v_c	V_c	V_s	$\varphi_s V_n$
(Long/Trans)	(-)	(kips)	(kips)	(kips)	(-)	(-)	(ksi)	(kips)	(kips)	(kips)
Longitudinal	Trailing	484	581	1175	4.7	1.3	0.10	228	666	804
Longitudinal	Leading	497	596	1320	4.5	1.5	0.12	268	666	841
Transverse	Trailing	389	467	247	3.2	2.8	0.19	423	666	980
Transverse	Leading	580	696	2253	2.8	3.0	0.22	498	666	1047

Column Shear Demands and Capacities
Table 5.5-1

Table 5.5-1 shows that the shear capacities are greater than the shear demands for all columns.

5.6 Balanced Stiffness and Frame Geometry Requirement Check

The balanced stiffness and balanced frame geometry requirements of Sections 4.1.2 and 4.1.3 of the *AASHTO Guide Specifications for LRFD Seismic Bridge Design* must be met. Due to the symmetry of this example, these requirements are okay by inspection. However, on many bridges these requirements may highly influence the design.

Chapter 5 Concrete Structures Contents

5.0 General 5-1

5.1 Materials 5-2
5.1.1 Concrete 5-2
5.1.2 Reinforcing Steel 5-8
5.1.3 Prestressing Steel 5-12
5.1.4 Prestress Losses 5-19
5.1.5 Prestressing Anchorage Systems 5-23
5.1.6 Post-Tensioning Ducts 5-23

5.2 Design Considerations 5-24
5.2.1 Service and Fatigue Limit States 5-24
5.2.2 Strength-Limit State 5-25
5.2.3 Strut-and-Tie Model 5-29
5.2.4 Deflection and Camber 5-30
5.2.5 Construction Joints 5-32
5.2.6 Inspection Lighting and Access 5-33

5.3 Reinforced Concrete Box Girder Bridges 5-36
5.3.1 Box Girder Basic Geometries 5-36
5.3.2 Reinforcement 5-41
5.3.3 Crossbeam 5-49
5.3.4 End Diaphragm 5-52
5.3.5 Dead Load Deflection and Camber 5-55
5.3.6 Thermal Effects 5-55
5.3.7 Hinges 5-56
5.3.8 Drain Holes 5-56

5.4 Hinges and Inverted T-Beam Pier Caps 5-58

5.5 Bridge Widenings 5-61
5.5.1 Review of Existing Structures 5-61
5.5.2 Analysis and Design Criteria 5-62
5.5.3 Removing Portions of the Existing Structure 5-65
5.5.4 Attachment of Widening to Existing Structure 5-66
5.5.5 Expansion Joints 5-78
5.5.6 Possible Future Widening for Current Designs 5-79
5.5.7 Bridge Widening Falsework 5-79
5.5.8 Existing Bridge Widenings 5-79

5.6 Prestressed Concrete Girder Superstructures 5-80
5.6.1 WSDOT Standard Prestressed Concrete Girder Types 5-80
5.6.2 Design Criteria 5-83
5.6.3 Fabrication and Handling 5-95
5.6.4 Superstructure Optimization 5-99
5.6.5 Repair of Damaged Prestressed Concrete Girders at Fabrication 5-105
5.6.6 Repair of Damaged Prestressed Concrete Girders in Existing Bridges 5-106
5.6.7 Deck Girders 5-111
5.6.8 Prestressed Concrete Tub Girders 5-113
5.6.9 Prestressed Concrete Girder Checking Requirement 5-114
5.6.10 Review of Shop Plans for Pre-tensioned Girders 5-114

5.7 Bridge Decks . . . 5-115
5.7.1 Bridge Deck Requirements . . . 5-115
5.7.2 Bridge Deck Reinforcement . . . 5-116
5.7.3 Stay-in-place Deck Panels . . . 5-121
5.7.4 Bridge Deck Protection . . . 5-122
5.7.5 Bridge Deck HMA Paving Design Policies . . . 5-128

5.8 Cast-in-place Post-Tensioned Bridges . . . 5-133
5.8.1 Design Parameters . . . 5-133
5.8.2 Analysis . . . 5-142
5.8.3 Post-tensioning . . . 5-145
5.8.4 Shear and Anchorages . . . 5-150
5.8.5 Temperature Effects . . . 5-151
5.8.6 Construction . . . 5-152
5.8.7 Post-tensioning Notes — Cast-in-place Girders . . . 5-154

5.9 Spliced Prestressed Concrete Girders . . . 5-156
5.9.1 Definitions . . . 5-156
5.9.2 WSDOT Criteria for Use of Spliced Girders . . . 5-157
5.9.3 Girder Segment Design . . . 5-157
5.9.4 Joints Between Segments . . . 5-158
5.9.5 Review of Shop Plans for Spliced Prestressed Concrete Girders . . . 5-163
5.9.6 Post-tensioning Notes — Spliced Prestressed Concrete Girders . . . 5-164

5.10 Bridge Standard Drawings . . . 5-166
Girder Sections . . . 5-166
Superstructure Construction Sequences . . . 5-166
W Girders . . . 5-166
WF Girders . . . 5-166
Wide Flange Thin Deck Girders . . . 5-167
Wide Flange Deck Girders . . . 5-167
Deck Bulb Tee Girders . . . 5-167
Slabs 5-167
Tub Girders . . . 5-168
Stay-In-Place Deck Panel . . . 5-168
Post Tensioned Spliced Girders . . . 5-168

5.11 Appendices . . . 5-170
Appendix 5.1-A1 Standard Hooks . . . 5-172
Appendix 5.1-A2 Minimum Reinforcement Clearance and Spacing for Beams and Columns 5-173
Appendix 5.1-A3 Reinforcing Bar Properties . . . 5-174
Appendix 5.1-A4 Tension Development Length of Deformed Bars . . . 5-175
Appendix 5.1-A5 Compression Development Length and Minimum Lap Splice of Grade 60 Bars . . . 5-178
Appendix 5.1-A6 Tension Development Length of 90º and 180º Standard Hooks . . . 5-179
Appendix 5.1-A7 Tension Lap Splice Lengths of Grade 60 Bars – Class B . . . 5-181
Appendix 5.1-A8 Prestressing Strand Properties and Development Length . . . 5-184
Appendix 5.2-A1 Working Stress Design . . . 5-185
Appendix 5.2-A2 Working Stress Design . . . 5-186
Appendix 5.2-A3 Working Stress Design . . . 5-187
Appendix 5.3-A1 Positive Moment Reinforcement . . . 5-188
Appendix 5.3-A2 Negative Moment Reinforcement . . . 5-189
Appendix 5.3-A3 Adjusted Negative Moment Case I (Design for M at Face of Support) . . . 5-190
Appendix 5.3-A4 Adjusted Negative Moment Case II (Design for M at ¼ Point) . . . 5-191
Appendix 5.3-A5 Cast-In-Place Deck Slab Design for Positive Moment Regions f'_c = 4.0 ksi 5-192
Appendix 5.3-A6 Cast-In-Place Deck Slab Design for Negative Moment Regions f'_c = 4.0 ksi . . . 5-193

Appendix 5.3-A7 Slab Overhang Design-Interior Barrier Segment 5-194
Appendix 5.3-A8 Slab Overhang Design-End Barrier Segment 5-195
Appendix 5.6-A1-1 Span Capability of W Girders 5-196
Appendix 5.6-A1-2 Span Capability of WF Girders 5-197
Appendix 5.6-A1-3 Span Capability of Deck Bulb Tee Girders 5-199
Appendix 5.6-A1-4 Span Capability of WF Thin Deck Girders 5-200
Appendix 5.6-A1-5 Span Capability of WF Deck Girders 5-202
Appendix 5.6-A1-6 Span Capability of Trapezoidal Tub Girders without Top Flange 5-204
Appendix 5.6-A1-7 Span Capability of Trapezoidal Tub Girders with Top Flange 5-205
Appendix 5.6-A1-8 Span Capability of Post-tensioned Spliced I-Girders 5-206
Appendix 5.6-A1-9 Span Capability of Post-tensioned Spliced Tub Girders 5-208
Appendix 5-B1 “A” Dimension for Precast Girder Bridges 5-210
Appendix 5-B2 Vacant 5-220
Appendix 5-B3 Existing Bridge Widenings 5-221
Appendix 5-B4 Post-tensioned Box Girder Bridges 5-223
Appendix 5-B5 Simple Span Prestressed Girder Design 5-229
Appendix 5-B6 Cast-in-Place Slab Design Example 5-314
Appendix 5-B7 Precast Concrete Stay-in-place (SIP) Deck Panel 5-332
Appendix 5-B8 W35DG Deck Bulb Tee 48" Wide 5-350
Appendix 5-B9 Prestressed Voided Slab with Cast-in-Place Topping 5-362
Appendix 5-B10 Positive EQ Reinforcement at Interior Pier of a Prestressed Girder 5-390
Appendix 5-B11 LRFD Wingwall Design Vehicle Collision 5-395
Appendix 5-B12 Flexural Strength Calculations for Composite T-Beams 5-398
Appendix 5-B13 Strut-and-Tie Model Design Example for Hammerhead Pier 5-404
Appendix 5-B14 Shear and Torsion Capacity of a Reinforced Concrete Beam 5-413
Appendix 5-B15 Sound Wall Design – Type D-2k 5-419

5.99 References 5-433

5.0 General

The provisions in this section apply to the design of cast-in-place (CIP) and precast concrete structures.

Design of concrete structures shall be based on the requirements and guidance cited herein and in the current AASHTO *LRFD Bridge Design Specifications* (LRFD), AASHTO *Guide Specifications for LRFD Seismic Bridge Design* (SEISMIC), Special Provisions and the *Standard Specifications for Road, Bridge, and Municipal Construction* (*Standard Specifications*) M 41-10.

5.1 Materials

5.1.1 Concrete

A. Strength of Concrete

Pacific NW aggregates have consistently resulted in concrete strengths, which may exceed 10,000 psi in 28 days. Specified concrete strengths should be rounded to the next highest 100 psi.

1. CIP Concrete Bridges

Since conditions for placing and curing concrete for CIP components are not as controlled as they are for precast bridge components, Class 4000 concrete is typically used. Where significant economy can be gained or structural requirements dictate, Class 5000 concrete may be used with the approvals of the Bridge Design Engineer, Bridge Construction Office, and Materials Lab.

2. Prestressed Concrete Girders

Nominal 28-day concrete strength (f'_c) for prestressed concrete girders is 7.0 ksi. Where higher strengths would eliminate a line of girders, a maximum of 10.0 ksi can be specified.

The minimum concrete compressive strength at release (f'_{ci}) for each prestressed concrete girder shall be shown in the plans. For high strength concrete, the compressive strength at release shall be limited to 7.5 ksi. Release strengths of up to 8.5 ksi can be achieved with extended curing for special circumstances.

B. Classes of Concrete

1. Class 3000

Used in large sections with light to nominal reinforcement, mass pours, sidewalks, curbs, gutters, and nonstructural concrete guardrail anchors, luminaire bases.

2. Class 4000

Used in CIP post-tensioned or conventionally reinforced concrete box girders, slabs, traffic and pedestrian barriers, approach slabs, footings, box culverts, wing walls, curtain walls, retaining walls, columns, and crossbeams.

3. Class 4000A

Used for bridge approach slabs.

4. Class 4000D

Used for CIP bridge decks.

5. Class 4000P and 5000P

Used for CIP piles, shafts and deep foundations where vibration is not feasible or practical

6. Class 4000W

Used underwater in seals.

7. Class 5000 or Higher

Used in CIP post-tensioned concrete box girder construction, deep bridge foundations, or in other special structural applications if significant economy can be gained or structural requirements dictate. Class 5000 or higher concrete is generally available near large urban centers. Designers shall confirm availability at the project site before specifying Class 5000 or higher concrete (such as with WACA).

The specified 28-day compressive strengths (f'_c) are equal to the numerical class of concrete. The compressive strengths for design are shown in Table 5.1.1-1.

Classes of Concrete	Design Compressive Strength (psi)
COMMERCIAL	2300
3000	3000
4000, 4000A, 4000D, 4000P	4000
4000W	2400*
5000, 5000P	5000
6000	6000

*40 percent reduction from Class 4000.

28-Day Compressive Design Strength
Table 5.1.1-1

C. Relative Compressive Concrete Strength

1. During design or construction of a bridge, it is necessary to determine the strength of concrete at various stages of construction. For instance, *Standard Specifications* Section 6-02.3(17)J discusses the time at which falsework and forms can be removed to various percentages of the concrete design strength. Occasionally, construction problems will arise which require a knowledge of the relative strengths of concrete at various ages. Table 5.1.1-2 shows the approximate values of the minimum compressive strengths of different classes of concrete at various ages. If the concrete has been cured under continuous moist curing at an average temperature, it can be assumed that these values have been developed.

2. Curing of the concrete (especially in the first 24 hours) has a very important influence on the strength development of concrete at all ages. Temperature affects the rate at which the chemical reaction between cement and water takes place. Loss of moisture can seriously impair the concrete strength.

3. If test strength is above or below that shown in Table 5.1.1-2, the age at which the design strength will be reached can be determined by direct proportion.

   For example, if the relative strength at 10 days is 64 percent instead of the minimum 70 percent shown in Table 5.1.1-2, the time it takes to reach the design strength can be determined using equation 5.1.1-1 below.

Let x = relative strength to determine the age at which the concrete will reach the design strength

$$\frac{x}{70} = \frac{100}{64} \quad Therefore, x = 110\% \qquad (5.1.1\text{-}1)$$

From Table 5.1.1-2, the design strength should be reached in 40 days.

Age	Relative Strength	Class 5000	Class 4000	Class 3000	Age	Relative Strength	Class 5000	Class 4000	Class 3000
Days	%	ksi	ksi	ksi	Days	%	ksi	ksi	ksi
3	35	1.75	1.40	1.05	20	91	4.55	3.64	2.73
4	43	2.15	1.72	1.29	21	93	4.65	3.72	2.79
5	50	2.50	2.00	1.50	22	94	4.70	3.76	2.82
6	55	2.75	2.20	1.65	23	95	4.75	3.80	2.85
7	59	2.95	2.36	1.77	24	96	4.80	3.84	2.88
8	63	3.15	2.52	1.89	25	97	4.85	3.88	2.91
9	67	3.35	2.68	2.01	26	98	4.90	3.92	2.94
10	70	3.5	2.80	2.10	27	99	4.95	3.96	2.97
11	73	3.65	2.92	2.19	28	100	5.00	4.00	3.00
12	75	3.75	3.00	2.25	30	102	5.10	4.08	3.06
13	77	3.85	3.08	2.31	40	110	5.50	4.40	3.30
14	79	3.95	3.16	2.37	50	115	5.75	4.60	3.45
15	81	4.05	3.24	2.43	60	120	6.00	4.80	3.60
16	83	4.15	3.32	2.49	70	125	6.25	5.00	3.75
17	85	4.25	3.34	2.55	80	129	6.45	5.16	3.87
18	87	4.35	3.48	2.61	90	131	6.55	5.24	3.93
19	89	4.45	3.56	2.67	100	133	6.70	5.40	4.00

Relative and Compressive Strength of Concrete
Table 5.1.1-2

D. Modulus of Elasticity

The modulus of elasticity shall be determined as specified in AASHTO LRFD Section 5.4.2.4. For calculation of the modulus of elasticity, the unit weight of plain concrete (w_c) shall be taken as 0.155 kcf for prestressed concrete girders and 0.150 kcf for normal-weight concrete. The correction factor (K_1) shall normally be taken as 1.0.

E. Shrinkage and Creep

Shrinkage and creep shall be calculated in accordance with AASHTO LRFD Section 5.4.2.3. The relative humidity, *H*, may be taken as 75 percent for standard conditions. The maturity of concrete, *t*, may be taken as 2,000 days for standard conditions. The volume-to-surface ratio, *V/S*, is given in Table 5.6.1-1 for standard WSDOT prestressed concrete girders.

In determining the maturity of concrete at initial loading, t_i, one day of accelerated curing by steam or radiant heat may be taken as equal to seven days of normal curing.

The final deflection is a combination of the elastic deflection and the creep effect associated with given loads shown by the equation below.

$$\Delta_{total} = \Delta_{elastic}[1 + \psi(t, t_i)] \qquad (5.1.1\text{-}2)$$

Figure 5.1.1-1 provides creep coefficients for a range of typical initial concrete strength values, f'_{ci}, as a function of time from initial seven day steam cure (t_i = 7 days). The figure uses a volume-to-surface, *V/S*, ratio of 3.3 as an average for girders and relative humidity, *H*, equal to 75 percent.

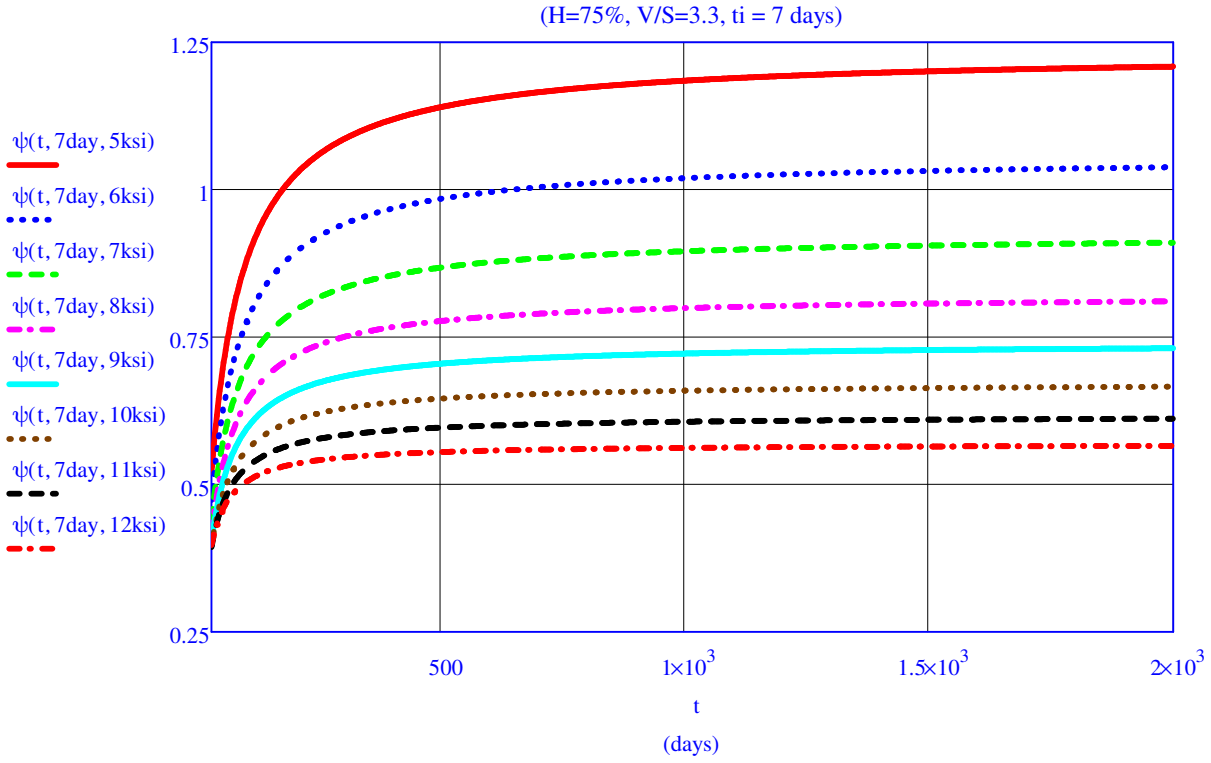

Creep Coefficient for Standard Conditions as Function of Initial Concrete Strength
Figure 5.1.1-1

F. Shrinkage

Concrete shrinkage strain, ε_{sh}, shall be calculated in accordance with AASHTO LRFD.

G. Grout

Grout is usually a prepackaged cement based grout or non-shrink grout that is mixed, placed, and cured as recommended by the manufacturer. It is used under steel base plates for both bridge bearings and luminaries or sign bridge bases. Should the grout pad thickness exceed 4″, steel reinforcement shall be used. For design purposes, the strength of the grout, if properly cured, can be assumed to be equal to or greater than that of the adjacent concrete but not greater than 4000 psi. Non-shrink grout is used in keyways between precast prestressed tri-beams, double-tees, and deck bulb tees (see *Standard Specifications* Section 6-02.3(25)O for deck bulb tee exception).

H. Mass Concrete

Mass concrete is any volume of concrete with dimensions large enough to require that measures be taken to cope with the generation of heat from hydration of the cement and attendant volume change to minimize cracking. Temperature-related cracking may be experienced in thick-section concrete structures, including spread footings, pile caps, bridge piers, crossbeams, thick walls, and other structures as applicable.

Concrete placements with least dimension greater than 6 feet should be considered mass concrete, although smaller placements with least dimension greater than 3 feet may also have problems with heat generation effects. Sha need not be considered mass concrete.

The temperature of mass concrete shall not exceed 160°F. The temperature difference between the geometric center of the concrete and the center of nearby exterior surfaces shall not exceed 35°F.

Designers could mitigate heat generation effects by specifying construction joints and placement intervals. Designers should consider requiring the Contractor to submit a thermal control plan, which may include such things as:

1. Temperature monitors and equipment.
2. Insulation.
3. Concrete cooling before placement.
4. Concrete cooling after placement, such as by means of internal cooling pipes.
5. Use of smaller, less frequent placements.
6. Other methods proposed by the Contractor and approved by the Engineer of Record.

Concrete mix design optimization, such as using low-heat cement, fly ash or slag cement, low-water/cement ratio, low cementitious materials content, larger aggregate, etc. is acceptable as long as the concrete mix meets the requirements of the *Standard Specifications* for the specified concrete class.

The ACI Manual of Concrete Practice Publication 207 and specifications used for the Tacoma Narrows Bridge Project suspension cable anchorages (2003-2006) can be used as references.

I. Self-Consolidating Concrete (SCC)

Self-consolidating concrete (SCC) may be used in structural members such as precast noise wall panels, barriers, three-sided structures, etc. as described in *Standard Specifications* Section 6-02.3(27).

SCC may be used in prestressed concrete girders.

SCC may be specified for cast-in-place applications where the use of conventional concrete could be challenging and problematic. Examples are where new concrete is being cast up against an existing soffit, or in members with very dense/ congested reinforcing steel. Use of SCC for primary structural components such as columns, crossbeams, slabs, etc. requires the approval of the WSDOT Bridge Design Engineer.

J. Shotcrete

Shotcrete could be used as specified in WSDOT Standard Plans. Shotcrete may not be suitable for some critical applications unless approved by the Engineer of Record.

Substitution of CIP conventional concrete in the contract document with shotcrete requires the approval of the Engineer of Record.

Some potential shortfalls of shotcrete as compared to conventional CIP concrete include:

- **Durability** – Conventional concrete is placed in forms and vibrated for consolidation. Shotcrete, whether placed by wet or dry material feed, is pneumatically applied to the surface and is not consolidated as conventional concrete. Due to the difference in consolidation, permeability can be affected. If the permeability is not low enough, the service life of the shotcrete will be affected and may not meet the minimum of 75 years specified for conventional concretes.

  Observation of some projects indicates the inadequate performance of shotcrete to properly hold back water. This results in leaking and potential freezing, seemingly at a higher rate than conventional concrete. Due to the method of placement of shotcrete, air entrainment is difficult to control. This leads to less resistance of freeze/thaw cycles.
- **Cracking** – There is more cracking observed in shotcrete surfaces compared to conventional concrete. Excessive cracking in shotcrete could be attributed to its higher shrinkage, method of curing, and lesser resistance to freeze/thaw cycles. The shotcrete cracking is more evident when structure is subjected to differential shrinkage.
- **Corrosion Protection** – The higher permeability of shotcrete places the steel reinforcement (whether mesh or bars) at a higher risk of corrosion than conventional concrete applications. Consideration for corrosion protection may be necessary for some critical shotcrete applications.
- **Safety** – Carved shotcrete and shotcrete that needs a high degree of relief to accent architectural features lead to areas of 4″-6″ of unreinforced shotcrete. These areas can be prone to an accelerated rate of deterioration. This, in turn, places pedestrians, bicyclists, and traffic next to the wall at risk of falling debris.
- **Visual Quality and Corridor Continuity** – As shotcrete is finished by hand, standard architectural design, as defined in the *Design Manual* M 22-01, typically cannot be met. This can create conflicts with the architectural guidelines developed for the corridor. Many times the guidelines are developed with public input. If the guidelines are not met, the public develops a distrust of the process. In other cases, the use of faux rock finishes, more commonly used by the private sector, can create the perception of the misuse of public funds.

K. Lightweight Aggregate Concrete

Lightweight aggregate concrete may be used for precast and CIP members upon approval of the WSDOT Bridge Design Engineer.

L. Concrete Cover to Reinforcement

Concrete cover to reinforcement shall conform to AASHTO LRFD Section 5.10.1.

1. Precast Prestressed Concrete Girders

Cover to prestressing strands in precast prestressed concrete girders may be measured to the center of the strand.

Cover to mild steel reinforcement in precast prestressed concrete girders shall conform to AASHTO LRFD Section 5.10.1. However, cover to ties and stirrups may be reduced to 1.0 inch in "Exterior other than above" applications. See Section 5.6.7.A for additional cover requirements for deck girders.

5.1.2 Reinforcing Steel

A. Grades

Reinforcing bars shall be deformed and shall conform to *Standard Specifications* Section 9-07.2. AASHTO M 31 Grade 60 or ASTM A 706 Grade 60 reinforcement may be used in prestressed concrete girders. ASTM A 706 Grade 60 reinforcement is preferred for all other bridge and structure components.

1. Grade 80 Reinforcement

Reinforcement conforming to ASTM A706 Grade 80 may be used in Seismic Design Category (SDC) A for all components. For SDCs B, C and D, ASTM A706 Grade 80 reinforcing steel shall not be used for elements and connections that are proportioned and detailed to ensure the development of significant inelastic deformations for which moment curvature analysis is required to determine the plastic moment capacity of ductile concrete members and expected nominal moment capacity of capacity protected members.

ASTM A706 Grade 80 reinforcing steel may be used for capacity-protected members such as footings, bent caps, oversized shafts, joints, and integral superstructure elements that are adjacent to the plastic hinge locations if the expected nominal moment capacity is determined by strength design based on the expected concrete compressive strength with a maximum usable strain of 0.003 and a reinforcing steel yield strength of 80 ksi with a maximum usable strain of 0.090 for #10 bars and smaller, 0.060 for #11 bars and larger. The resistance factors for seismic related calculations shall be taken as 0.90 for shear and 1.0 for bending.

ASTM A706 Grade 80 reinforcing steel shall not be used for oversized shafts where in-ground plastic hinging is considered as a part of the Earthquake-Resisting System (ERS).

ASTM A706 Grade 80 reinforcing steel shall not be used for transverse and confinement reinforcement.

For seismic hooks, f_y shall not be taken greater than 75 ksi.

B. Sizes

Reinforcing bars are referred to in the contract plans and specifications by number and vary in size from #3 to #18. For bars up to and including #8, the number of the bar coincides with the bar diameter in eighths of an inch. The #9, #10, and #11 bars have diameters that provide areas equal to 1″ × 1″ square bars, 1⅛″ × 1⅛″ square bars and 1¼″ × 1¼″ square bars respectively. Similarly, the #14 and #18 bars correspond to 1½″ × 1½″ and 2″ × 2″ square bars, respectively. Appendix 5.1-A3 shows the sizes, number, and various properties of the types of bars used in Washington State.

C. Development

1. Tension Development Length

Development length or anchorage of reinforcement is required on both sides of a point of maximum stress at any section of a reinforced concrete member. Development of reinforcement in tension shall be in accordance with AASHTO LRFD Section 5.10.8.2.1.

Appendix 5.1-A4 shows the tension development length for both uncoated and epoxy coated Grade 60 bars for normal weight concrete with specified strengths of 4.0 to 6.0 ksi.

2. Compression Development Length

Development of reinforcement in compression shall be in accordance with AASHTO LRFD Section 5.10.8.2.2. The basic development lengths for deformed bars in compression are shown in Appendix 5.1-A5. These values may be modified as described in AASHTO. However, the minimum development length shall be 1′-0″.

3. Tension Development Length of Standard Hooks

Standard hooks are used to develop bars in tension where space limitations restrict the use of straight bars. Development of standard hooks in tension shall be in accordance with AASHTO LRFD Section 5.10.8.2.4. Tension development lengths of 90° & 180° standard hooks are shown in Appendix 5.1-A6.

D. Splices

The Contract Plans shall clearly show the locations and lengths of splices. Splices shall be in accordance with AASHTO LRFD Section 5.10.8.4.

Lap splices, for either tension or compression bars, shall not be less than 2′-0″.

1. Tension Lap Splices

Many of the same factors which affect development length affect splices. Consequently, tension lap splices are a function of the bar's development length, l_d. There are two classes of tension lap splices: Class A and B. Designers are encouraged to splice bars at points of minimum stress and to stagger lap splices along the length of the bars.

Appendix 5.1-A7 shows tension lap splices for both uncoated and epoxy coated Grade 60 bars for normal weight concrete with specified strengths of 4.0 to 6.0 ksi.

2. Compression Lap Splices

Compression lap splice lengths are shown in Appendix 5.1-A5 for concrete strengths greater than or equal to 3.0 ksi.

3. Mechanical Splices

Mechanical splices are proprietary splicing mechanisms. The requirements for mechanical splices are found in *Standard Specifications* Section 6-02.3(24)F and in AASHTO LRFD Sections 5.5.3.4 and 5.10.8.4.2b.

4. Welded Splices

AASHTO LRFD Section 5.10.8.4.2c describes the requirements for welded splices. On modifications to existing structures, welding of reinforcing bars may not be possible because of the non-weldability of some steels.

E. Hooks and Bends

For hook and bend requirements, see AASHTO LRFD Section 5.10.2. Standard hooks and bend radii are shown in Appendix 5.1-A1.

F. Fabrication Lengths

Reinforcing bars are available in standard mill lengths of 40′ for bar sizes #3 and #4 and 60′ for bar sizes of #5 and greater. Designers shall limit reinforcing bar lengths to the standard mill lengths. Because of placement considerations, designers should consider limiting the overall lengths of bar size #3 to 30′ and bar size #5 to 40′.

Spirals of bar sizes #4 through #6 are available on 5,000 lb coils. Spirals should be limited to a maximum bar size of #6.

G. Placement

Placement of reinforcing bars can be a problem during construction. Sometimes it may be necessary to make a large scale drawing of reinforcement to look for interference and placement problems in confined areas. If interference is expected, additional details are required in the contract plans showing how to handle the interference and placement problems. Appendix 5.1-A2 shows the minimum clearance and spacing of reinforcement for beams and columns.

H. Joint and Corner Details

1. T-Joint

The forces form a tension crack at 45° in the joint. Reinforcement as shown in Figure 5.1.2-1 is more than twice as effective in developing the strength of the corner than if the reinforcement was turned 180°.

2. “Normal” Right Corners

Corners subjected to bending as shown in Figure 5.1.2-2 will crack radially in the corner outside of the main reinforcing steel. Smaller size reinforcing steel shall be provided in the corner to distribute the radial cracking.

3. Right or Obtuse Angle Corners

Corners subjected to bending as shown in Figure 5.1.2-3 tend to crack at the reentrant corner and fail in tension across the corner. If not properly reinforced, the resisting corner moment may be less than the applied moment.

Reinforced as shown in Figure 5.1.2-3, but without the diagonal reinforcing steel across the corner, the section will develop 85 percent of the ultimate moment capacity of the wall. If the bends were rotated 180°, only 30 percent of the wall capacity would be developed.

Adding diagonal reinforcing steel across the corner, approximately equal to 50 percent of the main reinforcing steel, will develop the corner strength to fully resist the applied moment. Extend the diagonal reinforcement past the corner each direction for anchorage. Since this bar arrangement will fully develop the resisting moment, a fillet in the corner is normally unnecessary.

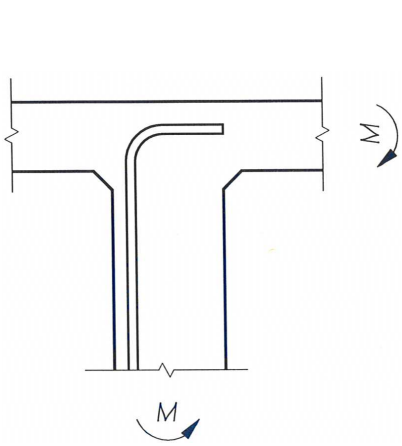

T-Joint Reinforcing Details
Figure 5.1.2-1

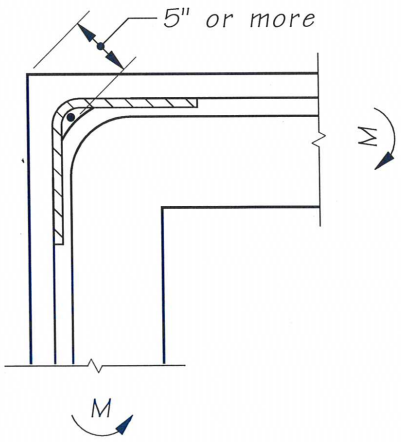

"Normal" Right Corner Reinforcing Details
Figure 5.1.2-2

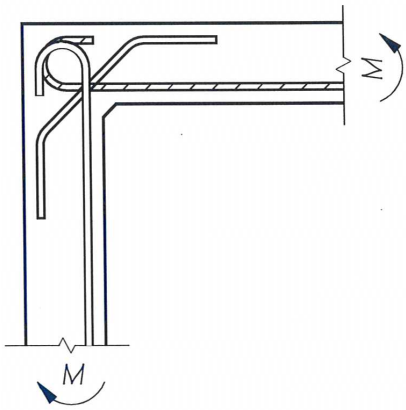

Right or Obtuse Angle Corner Reinforcing Details
Figure 5.1.2-3

I. Welded Wire Reinforcement in Prestressed Concrete Girders, Walls, Barriers and Deck Panels

Welded wire reinforcement may be used to replace steel reinforcing bars in prestressed concrete girders, walls, barriers, and deck panels.

Welded wire reinforcement shall meet all AASHTO requirements.

Welded wire reinforcement shall be deformed. The yield strength shall be limited to a maximum of 75 ksi.

Longitudinal wires and welds shall be excluded from regions with high shear demands, including girder webs, and are limited to the flange areas as described in AASHTO LRFD Section 5.8.2.8. Longitudinal wires for anchorage of welded wire reinforcement shall have an area of 40 percent or more of the area of the wire being anchored as described in ASTM A497 but shall not be less than D4.

Epoxy-coated wire and welded wire reinforcement shall conform to *Standard Specifications* Section 9-07.3 with the exception that ASTM A884 Class A Type I shall be used instead of ASTM A775.

J. Headed Steel Reinforcing Bars

Headed steel reinforcing bars conforming to ASTM A970 Class HA may be used to develop reinforcement in tension. Use and development length shall be in accordance with ACI 318 (see Section 25.4.4 for development length). Minimum concrete cover and clearances to headed steel reinforcing bars shall also be provided to the outermost part of the head of the bar. Designers shall provide main bar (unheaded portion) location requirements in contract documents and verify that cover and clearance requirements to the head of the bar can be satisfied. ASTM A970 Class HA requires that the net bearing area of the head shall not be less than four times the nominal cross-sectional area of the bar. However, the head shape and an upper limit to the head net bearing area are not specified. A gross head area of ten times the bar area (a net bearing area of the head of nine times the bar area) could be used as an estimate of the upper limit of the head area.

5.1.3 Prestressing Steel

A. General

Three types of high-tensile steel used for prestressing steel are:

1. Strands

AASHTO M 203 Grade 270, low relaxation or stress relieved

2. Bars

AASHTO M 275 Type II

3. Parallel Wires

AASHTO M 204 Type WA

All WSDOT designs are based on low relaxation strands using either 0.5″ or 0.6″ diameter strands for girders, and ⅜″ or 7⁄16″ diameter strands for stay-in-place precast deck panels. Properties of uncoated and epoxy-coated prestressing stands are shown in Appendix 5.1-A8. 0.62″ and 0.7″ diameter strands may be used for top temporary strands in prestressed concrete girders.

Provide adequate concrete cover and consider use of epoxy coated prestressing reinforcement in coastal areas or where members are directly exposed to salt water.

B. Allowable Stresses

Allowable stresses for prestressing steel are as listed in AASHTO LRFD Section 5.9.2.2.

C. Prestressing Strands

Standard strand patterns for all types of WSDOT prestressed concrete girders are shown on the Bridge Standard Drawings website (www.wsdot.wa.gov/Bridge/Structures/StandardDrawings.htm).

1. Straight Strands

The position of the straight strands in the bottom flange is standardized for each girder type.

2. Harped Strands

The harped strands are bundled between the harping points (the 0.4 and 0.6 points of the girder length). The girder fabricator shall select a bundle configuration that meets plan centroid requirements.

There are practical limitations to how close the centroid of harped strands can be to the bottom of a girder. The minimum design value for this shall be determined using the following guide: Up to 12 harped strands are placed in a single bundle with the centroid 4″ above the bottom of the girder. Additional strands are placed in twelve-strand bundles with centroids at 3″ spacing vertically upwards.

At the girder ends, the strands are splayed to a normal pattern. The centroid of strands at both the girder end and the harping point may be varied to suit girder stress requirements.

The slope of any individual harped strands shall not be steeper than 8 horizontal to 1 vertical for 0.6″ diameter strands, and 6 horizontal to 1 vertical for 0.5″ diameter strands.

The harped strand exit location at the girder ends shall be held as low as possible while maintaining the concrete stresses within allowable limits.

3. Temporary Strands

Temporary strands in the top flanges of prestressed concrete girders may be required for shipping (see Section 5.6.3). These strands may be pre-tensioned and bonded only for the end 10 feet of the girder, or may be post-tensioned prior to lifting the girder from the form. These strands can be considered in design to reduce the required transfer strength, to provide stability during shipping, and to reduce the "A" dimension. These strands must be cut before the CIP intermediate diaphragms are placed.

D. Development of Prestressing Strand

1. General

Development of prestressing strand shall be as described in AASHTO LRFD Section 5.9.4.3.

The development length of bonded uncoated & coated prestressing strands are shown in Appendix 5.1-A8.

2. Partially Debonded Strands

Where it is necessary to prevent a strand from actively supplying prestress force near the end of a girder, it shall be debonded. This can be accomplished by taping a close fitting PVC tube to the stressed strand from the end of the girder to some point where the strand can be allowed to develop its load. Since this is not a common procedure, it shall be carefully detailed on the plans. It is important when this method is used in construction that the taping of the tube is done in such a manner that concrete cannot leak into the tube and provide an undesirable bond of the strand.

Partially debonded strands shall meet the requirements of AASHTO LRFD Section 5.9.4.3.3.

3. Strand Development Outside of Prestressed Concrete Girders

Extended bottom prestress strands are used to connect the ends of girders with diaphragms and resist loads from creep effects, shrinkage effects, and positive moments.

Extended strands must be developed in the short distance within the diaphragm (between two girder ends at intermediate piers). This is normally accomplished by requiring strand chucks and anchors as shown in Figure 5.1.3-1. Strand anchors are normally installed at 1′-9″ from the girder ends.

The designer shall calculate the number of extended straight strands needed to develop the required capacity at the end of the girder. The number of extended strands shall not be less than four.

For fixed intermediate piers at the Extreme Event I limit state, the total number of extended strands for each girder end shall not be less than:

$$N_{ps} = 12[M_{sei} \cdot K - M_{SIDL}] \cdot \frac{1}{0.9\phi A_{ps} f_{py} d} \quad (5.1.3\text{-}1)$$

Where:

M_{sei} = Moment due to overstrength plastic moment capacity of the column and associated overstrength plastic shear, either within or outside the effective width, per girder, kip-ft

M_{SIDL} = Moment due to superimposed dead loads (traffic barrier, sidewalk, etc.) per girder, kip-ft

K = Span moment distribution factor as shown in Figure 5.1.3-2 (use maximum of K1 and K2)

A_{ps} = Area of each extended strand, in^2

f_{py} = Yield strength of prestressing steel specified in AASHTO LRFD Table 5.4.4.1-1, ksi

d = Distance from top of deck slab to c.g. of extended strands, in

φ = Flexural resistance factor, 1.0

The plastic hinging moment at the c.g. of the superstructure is calculated using the following:

$$M_{po}^{CG} = M_{po}^{top} + \frac{\left(M_{po}^{top} + M_{po}^{base}\right)}{L_c} h \quad (5.1.3\text{-}2)$$

Where:

M_{po}^{top} = Plastic overstrength moment at top of column, kip-ft

M_{po}^{base} = Plastic overstrength moment at base of column, kip-ft

h = Distance from top of column to c.g. of superstructure, ft

L_c = Column clear height used to determine overstrength shear associated with the overstrength moments, ft

For prestressed concrete girders with cast-in-place deck slabs, where some girders are outside the effective widths and the effective widths for each column do not overlap, two-thirds of the plastic hinging moment at the c.g. of the superstructure shall be resisted by girders within the effective width. The remaining one-third shall be resisted by girders outside the effective width. The plastic hinging moment per girder is calculated using the following:

$$M_{sei}^{Int} = \frac{2M_{po}^{CG}}{3N_g^{int}} \text{ For girders within the effective width} \quad (5.1.3\text{-}3)$$

$$M_{sei}^{Ext} = \frac{M_{po}^{CG}}{3N_g^{ext}} \text{ For girders outside the effective width} \quad (5.1.3\text{-}4)$$

$$\text{If } M_{sei}^{Int} \geq M_{sei}^{Ext} \text{ then } M_{sei} = M_{sei}^{Int} \quad (5.1.3\text{-}5)$$

$$\text{If } M_{sei}^{Int} < M_{sei}^{Ext} \text{ then } M_{sei} = \frac{M_{po}^{CG}}{N_g^{int}+N_g^{ext}} \quad (5.1.3\text{-}6)$$

Where:

N_g^{int} = Number of girders encompassed by the effective width
N_g^{ext} = Number of girders outside the effective width

For prestressed concrete girders with cast-in-place deck slabs, where all girders are within the effective width or the effective widths for each column overlap, the plastic hinging moment at the c.g. of the superstructure shall be resisted by all girders within the effective width. The plastic hinging moment per girder is calculated using the following:

$$M_{sei} = \frac{M_{po}^{CG}}{N_g^{int}} \quad (5.1.3\text{-}7)$$

The effective width for the extended strand calculation shall be taken as:

$$B_{eff} = D_c + D_s \quad (5.1.3\text{-}8)$$

Where:

D_c = Diameter or width of column, see Figure 5.1.3-3
D_s = Depth of superstructure from top of column to top of deck slab, see Figure 5.1.3-3

See Appendix 5-B10 for a design example.

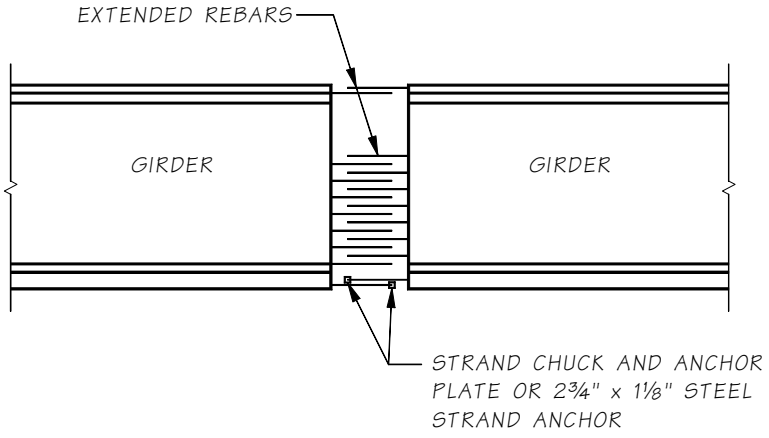

Strand Development
Figure 5.1.3-1

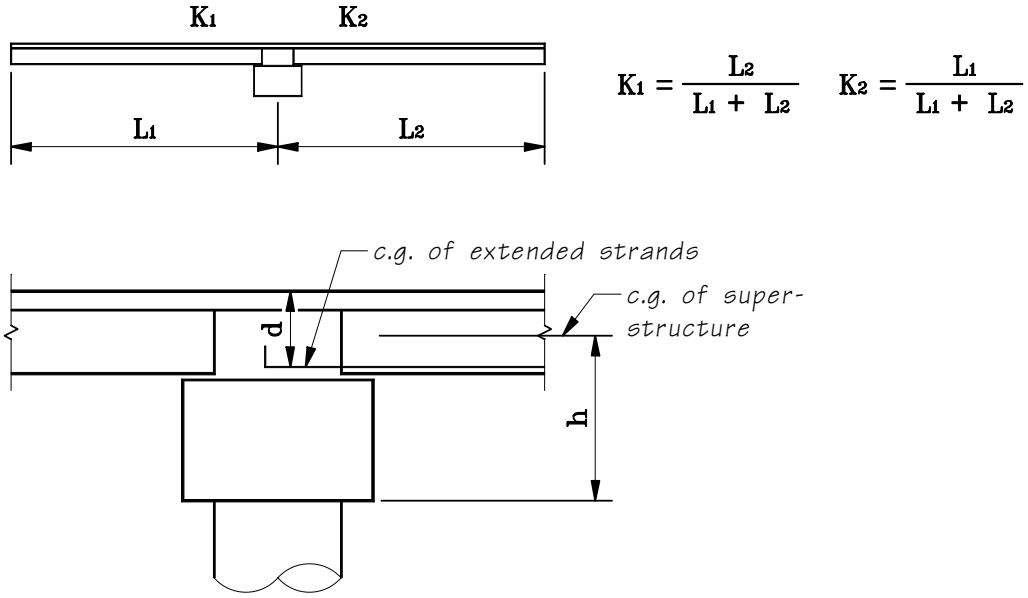

Extended Strand Design
Figure 5.1.3-2

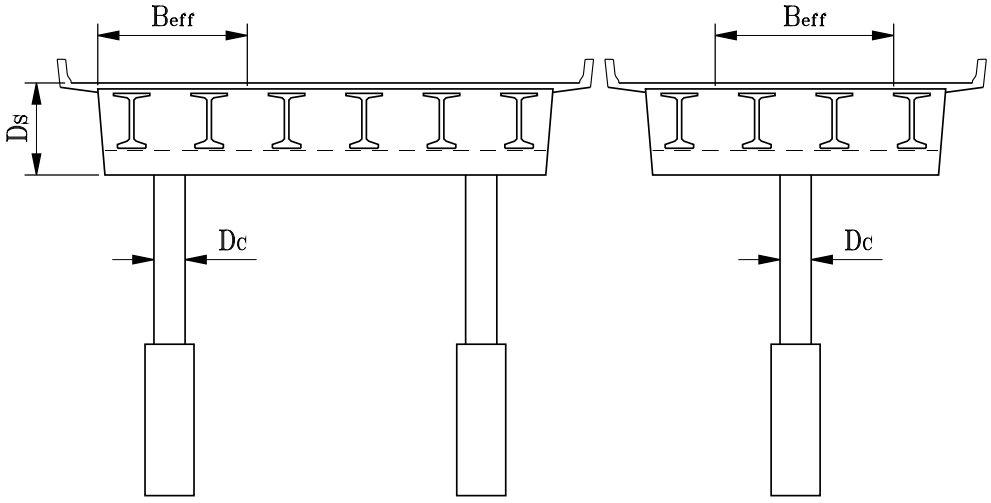

Effective Superstructure Width for Extended Strand Design
Figure 5.1.3-3

Continuity of extended strands is essential for all prestressed concrete girder bridges with fixed diaphragms at intermediate piers. Strand continuity may be achieved by directly overlapping extended strands as shown in Figure 5.1.3-4, by use of strand ties as shown in Figure 5.1.3-5, by the use of the crossbeam ties as shown in Figure 5.1.3-6 along with strand ties, or by a combination of all three methods. The following methods in order of hierarchy shall be used for all prestressed concrete girders for creating continuity of extended strands:

Method 1 – Direct extended strands overlapping shall be used at intermediate piers without any angle point due to horizontal curvature and for any crossbeam width. This is the preferred method of achieving extended strand continuity. Congestion of reinforcement and girder setting constructability shall be considered when large numbers of extended strands are required. In these cases, strand ties may be used in conjunction with extended strands.

Method 2 – Strand ties shall be used at intermediate piers with a girder angle point due to horizontal curvature where extended strands are not parallel and would cross during girder placement. Crossbeam widths shall be greater than or equal to 6 feet measured along the skew. It is preferable that strand ties be used for all extended strands, however if the region becomes too congested for rebar placement and concrete consolidation, additional forces may be carried by crossbeam ties up to a maximum limit as specified in equation 5.1.3-8.

Method 3 – For crossbeams with widths less than 6′ and a girder angle point due to horizontal curvature, strand ties shall be used if a minimum of 8″ of lap can be provided between the extended strand and strand tie. In this case the strand ties shall be considered fully effective. For cases where less than 8″ of lap is provided, the effectiveness of the strand tie shall be reduced proportional to the reduction in lap. All additional forces not taken by strand ties must be carried by crossbeam ties up to the maximum limit as specified in equation 5.1.3-8. If this limit is exceeded, the geometry of the width of the crossbeam shall be increased to provide sufficient lap for the strand ties.

The area of transverse ties considered effective for strand ties development in the lower crossbeam (A_s) shall not exceed:

$$A_s = \frac{1}{2}\left(\frac{A_{ps} f_{py} n_s}{f_{ye}}\right) \qquad (5.1.3\text{-}9)$$

Where:

A_{ps} = Area of strand ties, in^2
f_{py} = Yield strength of extended strands, ksi
n_s = Number of extended strands that are spliced with strand and crossbeam ties
f_{ye} = Expected yield strength of transverse tie reinforcement, ksi

Two-thirds of A_s shall be placed directly below the girder and the remainder of A_s shall be placed outside the bottom flange width as shown in Figure 5.1.3-6.

The size of strand ties shall be the same as the extended strands, and shall be placed at the same level and proximity of the extended strands.

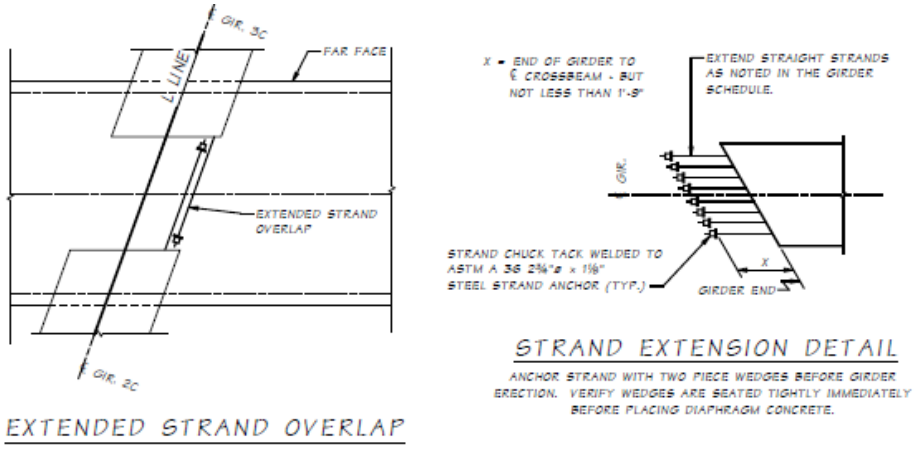

Overlapping Extended Strand
Figure 5.1.3-4

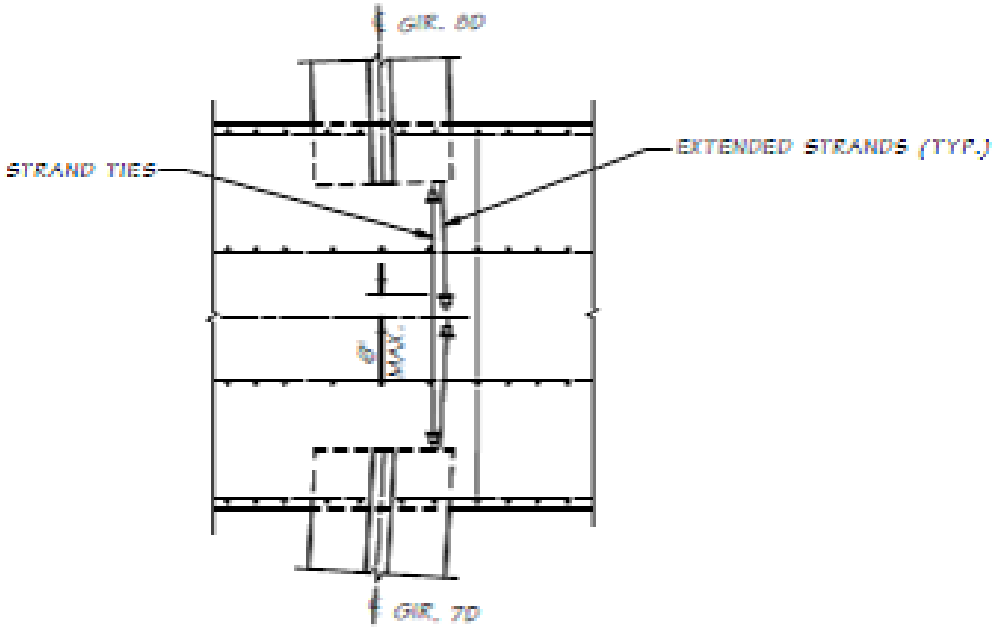

Strand Ties
Figure 5.1.3-5

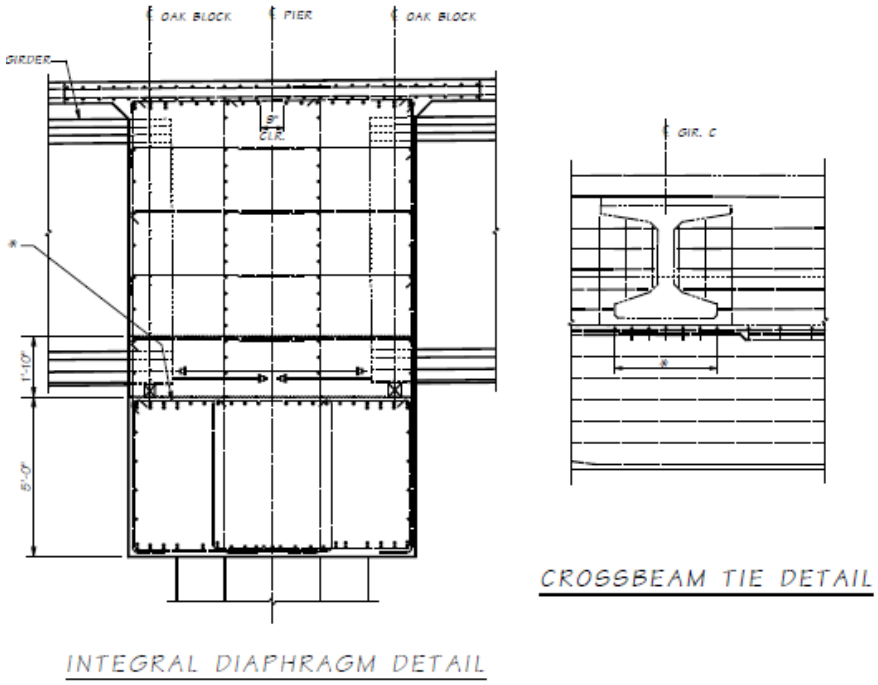

Lower Crossbeam Ties
Figure 5.1.3-6

5.1.4 Prestress Losses

AASHTO LRFD outline the method of predicting prestress losses for usual prestressed concrete bridges that shall be used in design except as noted below.

A. Instantaneous Losses

1. Elastic Shortening of Concrete

Transfer of prestress forces into the prestressed concrete girder ends results in an instantaneous elastic loss. The prestress loss due to elastic shortening shall be added to the time dependent losses to determine the total losses. The loss due to elastic shortening shall be taken as in accordance with AASHTO LRFD Section 5.9.3.2.3.

For pre-tensioned member and low-relaxation strands, f_{cgp} may be calculated based on $0.7f_{pu}$. For post-tensioned members with bonded tendons, f_{cgp} may be calculated based on prestressing force after jacking at the section of maximum moment.

2. Anchorage Set Loss

The anchor set loss shall be based on ⅜″ slippage for design purposes. Anchor set loss and the length affected by anchor set loss is shown in Figure 5.1.4-1.

$$x = \sqrt{\frac{\Delta_{set} A_{PT} E_p L}{P_{j\text{-}left} - P_{j\text{-}right}}} \qquad (5.1.4\text{-}1)$$

$$\Delta f_{pA} = \frac{2x\left(P_{j\text{-}left} - P_{j\text{-}right}\right)}{A_{PT} L} \qquad (5.1.4\text{-}2)$$

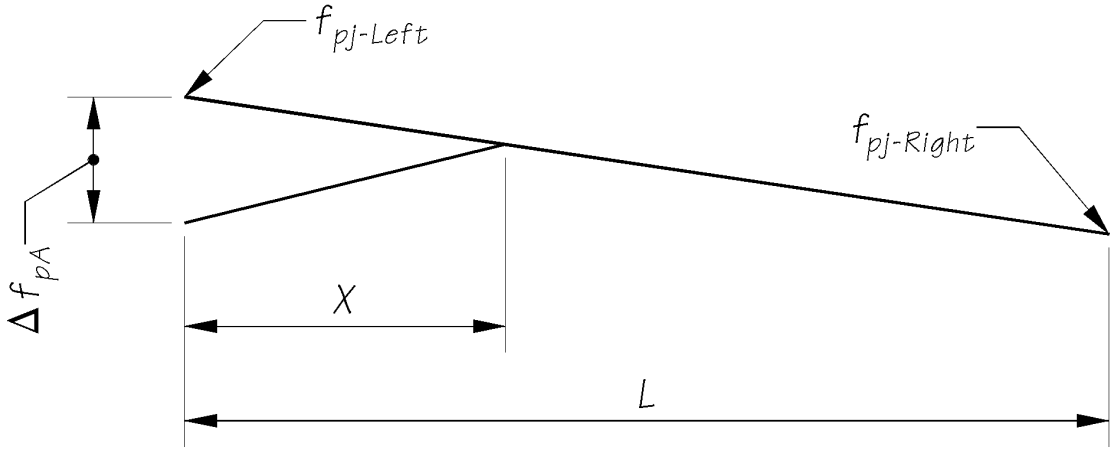

Anchorage Set Loss
Figure 5.1.4-1

3. Friction Losses

Friction losses occurring during jacking and prior to anchoring depend on the system and materials used. For a rigid spiral galvanized ferrous metal duct system, μ shall be 0.20 and K = 0.0002. For plastic ducts, the designer shall use the values shown in AASHTO LRFD Table 5.9.3.2.2b.

To avoid the substantial friction loss caused by sharp tendon curvature in the end regions where the tendons flare out from a stacked arrangement towards the bearing plates, use 0.10 times the span length or 20 feet as the minimum flare zone length. The recommended minimum radius (horizontal or vertical) of flared tendons is 200 feet. In the special cases where sharp curvature cannot be avoided, extra horizontal and vertical ties shall be added along the concave side of the curve to resist the tendency to break through the web.

$$\Delta f_{pF} = f_{pj}\left(1 - e^{-(kx+\mu\alpha)}\right) \quad (5.1.4\text{-}3)$$

When summing the α angles for total friction loss along the structure, horizontal curvature of the tendons as well as horizontal and vertical roadway curvature shall be included in the summation. The α angles for horizontally and vertically curved tendons are shown in Figure 5.1.4-2.

$$\alpha = \sqrt{(\alpha_H)^2 + (\alpha_V)^2}$$

where: $\alpha_V = \frac{2\delta}{L}$

$\alpha_H = \frac{S}{R}$

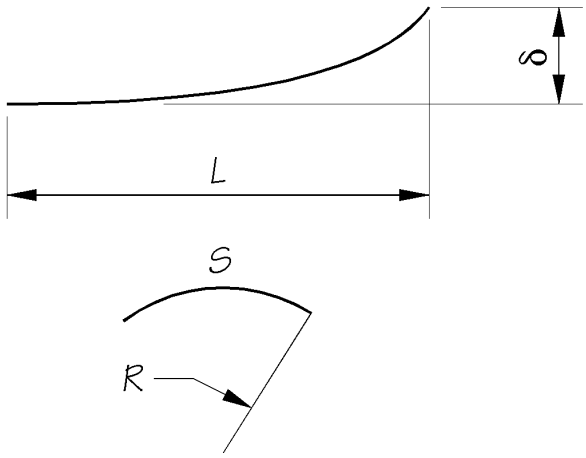

The α Angles for Curved PT Tendons
Figure 5.1.4-2

B. Approximate Estimate of Time-Dependent Losses

The Approximate Estimate of Time-Dependent Losses of AASHTO LRFD Section 5.9.3.3 may be used for preliminary estimates of time-dependent losses for prestressed concrete girders with composite decks as long as the conditions set forth in AASHTO are satisfied.

C. Refined Estimates of Time-Dependent Losses

Final design calculations of time-dependent prestress losses shall be based on the Refined Estimates of Time-Dependent Losses of AASHTO LRFD Section 5.9.3.4.

D. Total Effective Prestress

For standard precast, pre-tensioned members with CIP deck subject to normal loading and environmental conditions and pre-tensioned with low relaxation strands, the total effective prestress may be estimated as:

$$f_{pe} = f_{pj} - \Delta f_{pT} - \Delta f_{pES} - \Delta f_{pED} - \Delta f_{pSS} \quad (5.1.4\text{-}4)$$

The total prestress loss may be estimated as:

$$\Delta f_{pT} = \Delta f_{pRO} + \Delta f_{pLT} \quad (5.1.4\text{-}5)$$

Initial relaxation that occurs between the time of strand stressing and prestress transfer may be estimated as:

$$\Delta f_{pRO} = \frac{log(24t)}{40}\left(\frac{f_{pj}}{f_{py}} - 0.55\right) f_{pj} \quad (5.1.4\text{-}6)$$

Where:

t = Duration of time between strand stressing and prestress transfer, typically 1 day.
f_{pj} = Jacking stress
f_{py} = Yield strength of the strand

Long term time dependent losses, Δf_{pLT}, are computed in accordance with the refined estimates of AASHTO LRFD Section 5.9.3.4 or a detailed time-step method. Elastic gain due to deck shrinkage shall be considered separately.

Elastic shortening, Δf_{pES}, is computed in accordance with AASHTO LRFD Section 5.9.3.2.3a.

The elastic gain due to deck placement, superimposed dead loads and live loads is taken to be:

$$\Delta f_{pED} = \frac{E_p}{E_c}\left[-\frac{(M_{slab}+M_{diaphragms})e_{ps}}{I_g} - \frac{(M_{sidl}+\gamma_{LL}M_{LL+IM})(Y_{bc}-Y_{bg}+e_{ps})}{I_c}\right] \quad (5.1.4\text{-}7)$$

Where:

E_p = Modulus of elasticity of the prestressing strand
E_c = Modulus of elasticity of the concrete at the time of loading
M_{slab} = Moment caused by deck slab placement
$M_{diaphragms}$ = Moment caused by diaphragms and other external loads applied to the non-composite girder section
M_{sidl} = Moment caused by all superimposed dead loads including traffic barriers and overlays
M_{LL+IM} = Moment caused by live load and dynamic load allowance
γ_{LL} = Live load factor (1.0 for Service I and 0.8 for Service III)
e_{ps} = Eccentricity of the prestressing strand
I_g = Moment of inertia of the non-composite girder
I_c = Moment of inertia of the composite girder
Y_{bg} = Location of the centroid of the non-composite girder measured from the bottom of the girder
Y_{bc} = Location of the centroid of the composite girder measured from the bottom of the girder

The elastic gain due to slab shrinkage, Δf_{pSS}, shall be computed in accordance with AASHTO LRFD Section 5.9.3.4.3d. Deck shrinkage shall be considered as an external force applied to the composite section for the Service I, Service III, and Fatigue I limit states. This force is applied at the center of the deck with an eccentricity from the center of the deck to the center of gravity of the composite section. This force causes compression in the top of the girder, tension in the bottom of the girder, and an increase in the effective prestress force (an elastic gain). The deck shrinkage strain shall be computed as 50 percent of the strain determined by AASHTO LRFD Equation 5.4.2.3.3-1.

E. Temporary Losses

For checking stresses during release, lifting, transportation, and erection of prestressed concrete girders, the elastic and time-dependent losses may be computed based on the following assumptions.

1. Lifting of Girders From Casting Beds

For normal construction, forms are stripped and girders are lifted from the casting bed within one day.

2. Transportation

Girders are most difficult to transport at a young age. The hauling configuration causes reduced dead load moments in the girder and the potential for overstress between the harping points. Overstress may also occur at the support points depending on the prestressing and the trucking configuration. This is compounded by the magnitude of the prestress force not having been reduced by losses. For an aggressive construction schedule girders are typically transported to the job site around day 10.

When losses are estimated by the Approximate Estimate of AASHTO LRFD Section 5.9.3.3, the losses at the time of hauling may be estimated by:

$$\Delta f_{pTH} = \Delta f_{pRO} + \Delta f_{pES} + \Delta f_{pH} \quad (5.1.4\text{-}8)$$

Where:

Δf_{pTH} = total loss at hauling

Δf_{pH} = time dependent loss at time of hauling =

$$3\frac{f_{pi}A_{ps}}{A_g}\gamma_h\gamma_{st} + 3\gamma_h\gamma_{st} + 0.6$$

3. Erection

During construction the non-composite girders must carry the full weight of the deck slab and interior diaphragms. This loading typically occurs around 120 days for a normal construction schedule.

4. Final Configuration

The composite slab and girder section must carry all conceivable loads including superimposed dead loads such as traffic barriers, overlays, and live loads. It is assumed that superimposed dead loads are placed at 120 days and final losses occur at 2,000 days.

5.1.5 Prestressing Anchorage Systems

There are numerous prestressing systems. Most systems combine a method of prestressing the strands with a method of anchoring it to concrete.

WSDOT requires approval of all multi-strand and/or bar anchorages used in prestressed concrete bridges as described in *Standard Specifications* Section 6-02.3(26).

5.1.6 Post-Tensioning Ducts

Post-tensioning ducts shall meet the requirements of *Standard Specifications* Section 6-02.3(26)E.

Ducts for longitudinal post-tensioning tendons in spliced prestressed concrete I-girders shall be made of rigid galvanized spiral ferrous metal to maintain standard girder concrete cover requirements.

5.2 Design Considerations

5.2.1 Service and Fatigue Limit States

A. General

Service limit state is used to satisfy allowable stresses, deflection, and control of cracking requirements. Design aids for tensile stress in reinforcement at the service limit state, f_{ss}, are provided in Appendices 5.2-A1, 5.2-A2, and 5.2-A3.

B. Control of Cracking

Reinforcement shall be provided and spaced to meet the requirements in AASHTO LRFD Section 5.6.7 "Control of Cracking by Distribution of Reinforcement." The exposure factor shall be based upon a Class 2 exposure condition.

C. Allowable Stresses in Prestressed Concrete Members

Allowable concrete stresses for the service and fatigue limit states are shown in Table 5.2.1-1. For prestressed concrete girders, the allowable concrete stresses shall be satisfied at all stages of girder construction and in service in accordance with Section 5.6.2.C. The tensile stress in the precompressed tensile zone for the final service load condition (Service III) is limited to zero. This prevents cracking of the concrete during the service life of the structure and provides additional stress and strength capacity for overloads.

For allowable tensile stresses that require bonded reinforcement sufficient to resist the tensile force in the concrete, the tensile force shall be computed using the procedure illustrated in AASHTO LRFD C5.9.2.3.1b assuming an uncracked section. The bonded reinforcement is proportioned using a stress of $0.5f_y$, not to exceed 30 ksi. Individual reinforcing bars are only considered if they are fully developed and are located within the tensile stress region of the member.

The variable λ is the concrete density modification factor calculated in accordance with AASHTO LRFD Section 5.4.2.8.

Condition	Stress	Location	Allowable Stress (ksi)
Temporary Stress at Transfer and Lifting from Casting Bed	Tensile	In areas without bonded reinforcement sufficient to resist the tensile force in the concrete	$0.0948\lambda\sqrt{f'_{ci}} \leq 0.2$
		In areas with bonded reinforcement sufficient to resist the tensile force in the concrete	$0.24\lambda\sqrt{f'_{ci}}$
	Compressive	All locations	$0.65f'_{ci}$
Temporary Stress at Shipping and Erection	Tensile	In areas without bonded reinforcement sufficient to resist the tensile force in the concrete	$0.0948\lambda\sqrt{f'_c} \leq 0.2$
		In areas with bonded reinforcement sufficient to resist the tensile force in the concrete	$0.19\lambda\sqrt{f'_c}$
		In areas with bonded reinforcement sufficient to resist the tensile force in the concrete when shipping at 6% superelevation, without impact (see Section 5.6.2.C.2.d)	$0.24\lambda\sqrt{f'_c}$
	Compressive	All locations	$0.65f'_c$
Final Stresses at Service Load	Tensile	Precompressed tensile zone	0.0
	Compressive	Effective prestress and permanent loads	$0.45f'_c$
		Effective prestress, permanent loads and transient (live) loads	$0.60f'_c$
Final Stresses at Fatigue Load	Compressive	Fatigue I Load Combination plus one-half effective prestress and permanent loads in accordance with AASHTO LRFD Section 5.5.3.1	$0.40f'_c$

Allowable Stresses in Prestressed Concrete Members
Table 5.2.1-1

5.2.2 Strength-Limit State

A. Flexure

Design for flexural force effects shall be in accordance with AASHTO LRFD Section 5.6.

For prestressed concrete girders, the approximate methods of AASHTO LRFD Section 5.6.3 underestimate the flexural strength of the composite deck-girder system[2, 23]. Strain compatibility approaches such as the PCI *Bridge Design Manual*[3] method (PCI BDM Section 8.2.2.5) and the Nonlinear Strain Compatibility Analysis method in the PCI Journal[23] are recommended. In addition to the effective area of the deck, the top flange of the girder and the mild reinforcement in the deck and the top flange of the girder may be included in the analysis.

The typical section for computation of prestressed concrete girder composite section properties is shown in Figure 5.6.2-1.

1. Flexural Design of Nonprestressed Singly-Reinforced Rectangular Beams

For design purposes, the area of reinforcement for a nonprestressed singly-reinforced rectangular beam or slab can be determined by letting:

$$M_u = \phi M_n = \phi A_s f_y \left(d - \frac{a}{2}\right) \quad (5.2.2\text{-}1)$$

However, if:

$$a = \frac{A_s f_y}{\alpha_1 f_c' b} \quad (5.2.2\text{-}2)$$

Equation (2) can be substituted into equation (1) and solved for A_s:

$$A_s = \left(\frac{\alpha_1 f_c' b}{f_y}\right)\left[d - \sqrt{d^2 - \frac{2M_u}{\alpha_1 f_c' b \phi}}\right] \quad (5.2.2\text{-}3)$$

Where:

A_s = Area of tension reinforcement (in^2)
M_u = Factored moment (kip-in)
f'_c = Specified compressive strength of concrete (ksi)
f_y = Specified minimum yield strength of tension reinforcement (ksi)
b = Width of the compression face (in)
d = Distance from compression face to centroid of tension reinf. (in)
Φ = 0.9
α_1 = From AASHTO LRFD Section 5.6.2.2

The resistance factor should be assumed to be 0.9 for a tension-controlled section for the initial determination of A_s. This assumption must then be verified by checking that the tensile strain in the extreme tension steel is equal to or greater than 0.005. This will also assure that the tension reinforcement has yielded as assumed.

$$\epsilon_t = 0.003\left(\frac{d_t - c}{c}\right) \geq 0.005 \quad (5.2.2\text{-}4)$$

Where:

ε_t = Tensile strain in the extreme tension steel
d_t = Distance from extreme compression fiber to centroid of extreme tension reinforcement (in)
c = $\dfrac{A_s f_y}{\alpha_1 f_c' b \beta_1}$
β_1 = From AASHTO LRFD Section 5.6.2.2

B. Shear

AASHTO LRFD Section 5.7 addresses shear design of concrete members.

1. The shear design of prestressed members shall be based on the general procedure of AASHTO LRFD Section 5.7.3.4.2.
2. The shear design of all non-prestressed members shall be based on either the general procedure, or the simplified procedure of AASHTO LRFD Section 5.7.3.4.1.
3. The strut-and-tie model shall be employed as required by AASHTO LRFD Sections 5.7.1.1 and 2 for regions adjacent to abrupt changes in cross-section, openings, draped ends, deep beams, corbels, integral bent caps, c-bent caps, outrigger bents, deep footings, pile caps, etc.
4. The maximum spacing of transverse reinforcement is limited to 18 inches.

For prestressed concrete girders, shear for the critical section at d_v from the internal face of the support and at the harping point are of particular interest.

C. Interface Shear

Interface shear transfer (shear friction) design is to be performed in accordance with AASHTO LRFD Section 5.7.4.

If a roughened surface is required for shear transfer at construction joints in new construction, they shall be identified in the plans. See *Standard Specifications* Section 6-02.3(12)A.

When designing for shear transfer between new and existing concrete, the designer shall consider the high construction cost associated with roughening existing concrete surfaces. Whenever practical, the design for placing new concrete against existing concrete shall be completed such that roughening of the existing concrete surfaces is not required (i.e. use cohesion and friction factors for a surface that is not intentionally roughened).

When the additional capacity provided by a roughened surface is required, the surface roughening shall meet the requirements specified in AASHTO LRFD Section 5.7.4.4 (i.e. uniform ¼″ minimum amplitude). See *Standard Specifications* Section 6-02.3(12)B and applicable WSDOT special provisions for concrete removal for reference.

The spall pattern roughening detail shown in Figure 5.2.2-1 may be included on plans as an alternative to the default uniform ¼″ amplitude roughening.

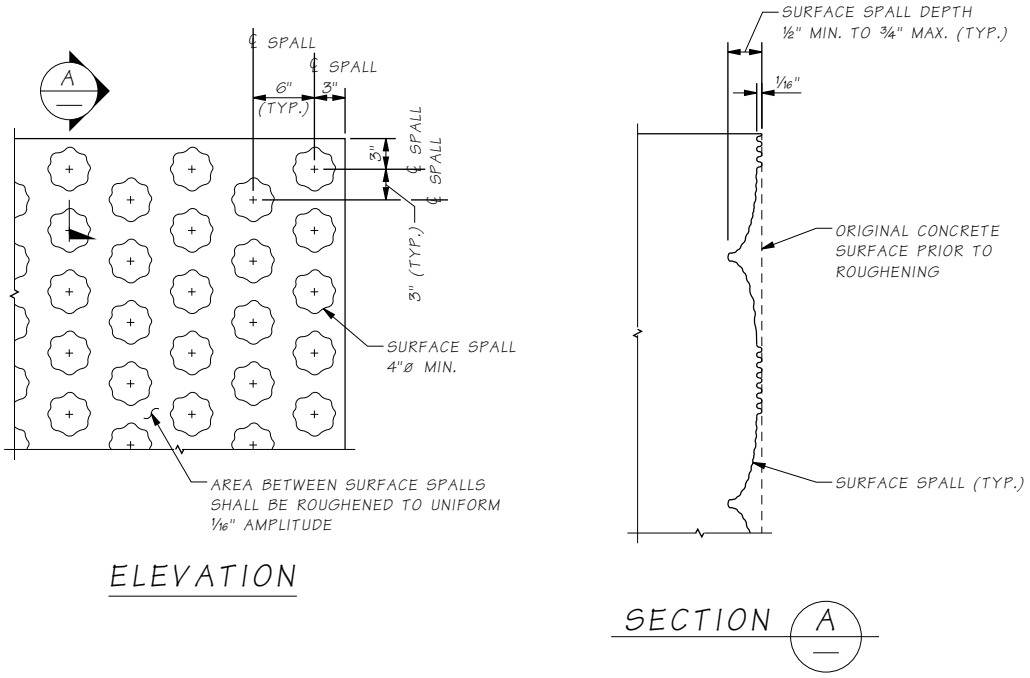

Spall Pattern Roughening Detail
Figure 5.2.2-1

Interface shear in prestressed concrete girder design is critical at the interface connection between deck slab and girder, and at the end connection of the girder to a diaphragm or crossbeam. Shear in these areas is resisted by roughened or saw-tooth shear keyed concrete as well as reinforcement extending from the girder.

1. Interface Shear Between Deck Slab and Girder

The top surfaces of prestressed concrete girders with cast-in-place decks shall be roughened as described in *Standard Specifications* Section 6-02.3(25)H. The interface shear is resisted by the girder stirrups which extend up into the deck slab as well as the roughened top surface of the girder top flange.

It is conservative to compute the interface shear force using the full factored loading applied to the composite deck slab and girder. However, the interface shear force need only be computed from factored loads applied to the composite section after the deck slab is placed such as superimposed dead loads and live loads.

For Stay-in-Place (SIP) deck systems, only the roughened top flange surface between SIP panel supports (and the portion of the permanent net compressive force P_c on that section) is considered engaged in interface shear transfer.

2. Interface Shear Friction at Girder End

A prestressed concrete girder may be required to carry shears at the end surface of the girder.

An end condition at an intermediate pier crossbeam is shown in Figure 5.2.2-2. The shear which must be carried along the interface A-A is the actual factored shear acting on the section. The portion of the girder end that is roughened with saw-toothed shear keys shown on the standard girder plans may be considered as a "surface intentionally roughened to an amplitude of 0.25 inches". Shear resistance must be developed using interface shear theory assuming the longitudinal bars and the extended strands are actively participating. The main longitudinal deck slab reinforcement is already fully stressed by negative bending moments and thus cannot be considered for shear requirements. All bars, including the extended strands, must be properly anchored in order to be considered effective. This anchorage requirement must be clearly shown on the plans.

Similar requirements exist for connecting the end diaphragm at bridge ends where the diaphragm is cast on the girders (girder End Type A). In this case, however, loads consist only of the factored diaphragm dead load, approach slab dead load, and those wheel loads which can distribute to the interface. Longitudinal reinforcement provided at girder ends shall be identical in both ends of the girder for construction simplicity.

The program PGSuper does not check interface shear friction at girder ends. Standard girder plan details are adequate for girder End Types A and B. Standard girder plan details shall be checked for adequacy for girder End Types C and D.

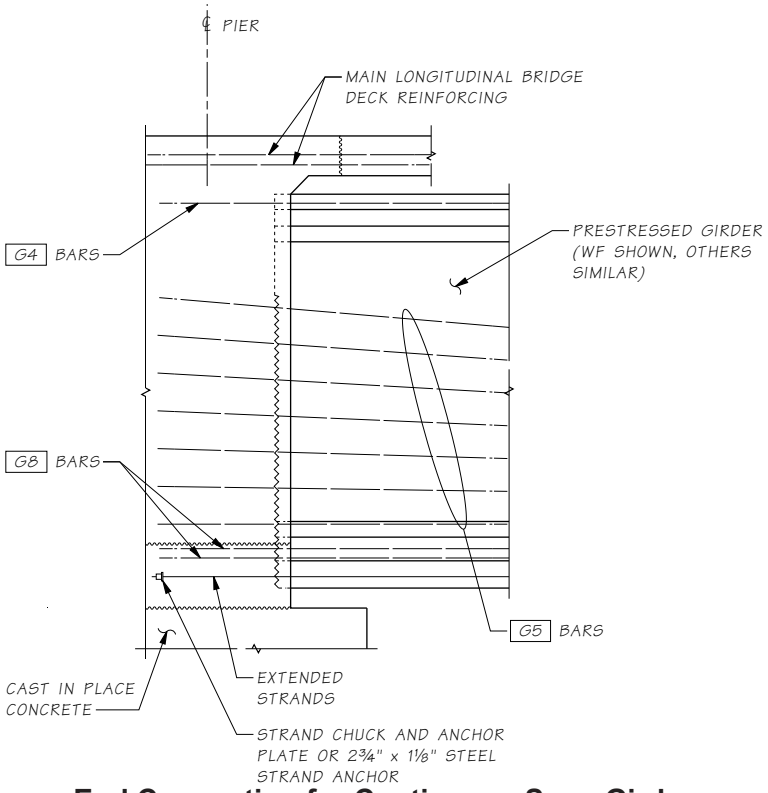

End Connection for Continuous Span Girder
Figure 5.2.2-2

D. Shear and Torsion

The design for shear and torsion is based on ACI 318-02 *Building Code*[4] *Requirements for Structural Concrete and Commentary* (318F-02) and is satisfactory for bridge members with dimensions similar to those normally used in buildings. AASHTO LRFD Section 5.7.3.6 may also be used for design.

According to Hsu[5], utilizing ACI 318-02 is awkward and overly conservative when applied to large-size hollow members. Collins and Mitchell[6] propose a rational design method for shear and torsion based on the compression field theory or strut-and-tie method for both prestressed and non-prestressed concrete beams. These methods assume that diagonal compressive stresses can be transmitted through cracked concrete. Also, shear stresses are transmitted from one face of the crack to the other by a combination of aggregate interlock and dowel action of the stirrups.

For recommendations and design examples, the designer can refer to the paper by M.P. Collins and D. Mitchell, Shear and Torsion Design of Prestressed and Non-Prestressed Concrete Beams, PCI Journal, September-October 1980, pp. 32-100[6].

5.2.3 Strut-and-Tie Model

Strut-and-tie models shall be used near regions of discontinuity or where beam theory is not applicable. Design and detailing considerations for strut-and-tie modeling is covered in AASHTO LRFD Section 5.8.2. See Appendix 5-B for a strut-and-tie design example for a pier cap.

5.2.4 Deflection and Camber

A. General

Flexural members are designed to have adequate stiffness to limit deflections or any deformations which may adversely affect the strength or serviceability of the structure at service load plus impact. The minimum superstructure depths are specified in AASHTO LRFD Table 2.5.2.6.3-1 and deflections shall be computed in accordance with AASHTO LRFD Section 5.6.3.2.6.

Accurate predictions of deflections are difficult to determine, since modulus of elasticity of concrete, E_c, varies with stress and age of concrete. Also, the effects of creep on deflections are difficult to estimate. For practical purposes, an accuracy of 10 to 20 percent is often sufficient. Prestressing can be used advantageously to control deflections; however, there are cases where excessive camber due to prestress has caused problems.

B. Deflection Calculation for Prestressed Concrete Girders

The "*D*" dimension is the computed girder deflection at midspan (positive upward) immediately prior to deck slab placement.

Standard Specifications Section 6-02.3(25)K defines two levels of girder camber at the time the deck concrete is placed, denoted D @ 40 Days and D @ 120 Days. They shall be shown in the plans to provide the contractor with lower and upper bounds of camber that can be anticipated in the field.

PGSuper calculates estimated cambers at 40 days (D_{40}) and 120 days (D_{120}). Due to variations in observed camber, these estimated cambers are generally considered to be upper bounds at their respective times. This is based on measured girder cambers of prestressed concrete girders compared with the estimated cambers from PGSuper.

D @ 120 Days is the upper bound of expected camber range at a girder age of 120 days after the release of prestress and is primarily intended to mitigate interference between the top of the cambered girder and the placement of concrete deck reinforcement. It is also used to calculate the "A" dimension at the girder ends. The age of 120 days was chosen because data has shown that additional camber growth after this age is negligible. D @ 120 Days may be taken as D120, the estimated camber at 120 days reported by PGSuper.

D @ 40 Days is the lower bound of expected camber range at a girder age of 40 days (30 days after the earliest allowable girder shipping age of 10 days). To match the profile grade, girders with too little camber require an increased volume of haunch concrete along the girder length. For girders with large flange widths, such as the WF series, this can add up to significant quantities of additional concrete for a large deck placement. Thus, the lower bound of camber allows the contractor to assess the risk of increased concrete quantities and mitigates claims for additional material. D @ 40 Days shall be taken as 50 percent of D40, the estimated camber at 40 days reported by PGSuper.

Figure 5.2.4-1 shows a typical pattern of girder deflection with time at centerline span. Portions of this characteristic curve are described below. The subparagraph numbers correspond to circled numbers on the curve.

1. **Elastic Deflection Due to Release of Prestress**

   The prestress force produces moments in the girder tending to bow the girder upward. Resisting these moments are girder section dead load moments. The result is a net upward deflection.

2. **Creep Deflection Before Cutting Temporary Strands**

   The girder continues to deflect upward due to the effect of creep. This effect is computed using the equation stated in Section 5.1.1E.

3. **Deflection Due to Cutting of Temporary Strands**

   Cutting of temporary strands results in an elastic upward deflection. The default time interval for creep calculations for release of top temporary strands is 90 days after the release of prestress during girder fabrication for D_{120} (10 days for D_{40}).

4. **Diaphragm Load Deflection**

   The load of diaphragm is applied to the girder section resulting in an elastic downward deflection. The default time interval for creep calculations for placing diaphragms is 90 days after the release of prestress during girder fabrication for D_{120} (10 days for D_{40}).

5. **Creep Deflection After Casting Diaphragms**

   The girder continues to deflect upward for any time delay between diaphragms and deck slab casting.

6. **Deck Slab Load Deflection**

   The load of the deck slab is applied to the girder section resulting in an elastic downward deflection. The default time interval for creep calculations for placing the deck slab is 120 days after the release of prestress during girder fabrication for D_{120} (40 days for D_{40}).

7. **Superimposed Dead Load Deflection**

   The load of the traffic barriers, sidewalk, overlay, etc. is applied to the composite girder section resulting in an elastic downward deflection.

8. **Final Camber**

   It might be expected that the above deck slab dead load deflection would be accompanied by a continuing downward deflection due to creep. However, many measurements of actual structure deflections have shown that once the deck slab is poured, the girder tends to act as though it is locked in position. To obtain a smooth riding surface on the deck, the deflection indicated on Figure 5.2.4-1 as “Screed Camber” (known as “C”) is added to the profile grade elevation of the deck screeds. The “C” dimension and the “Screed Setting Dimensions” detail shall be given in the plans.

C. Pre-camber

Prestressed concrete girders may be precambered to compensate for the natural camber and for the effect of the roadway geometry.

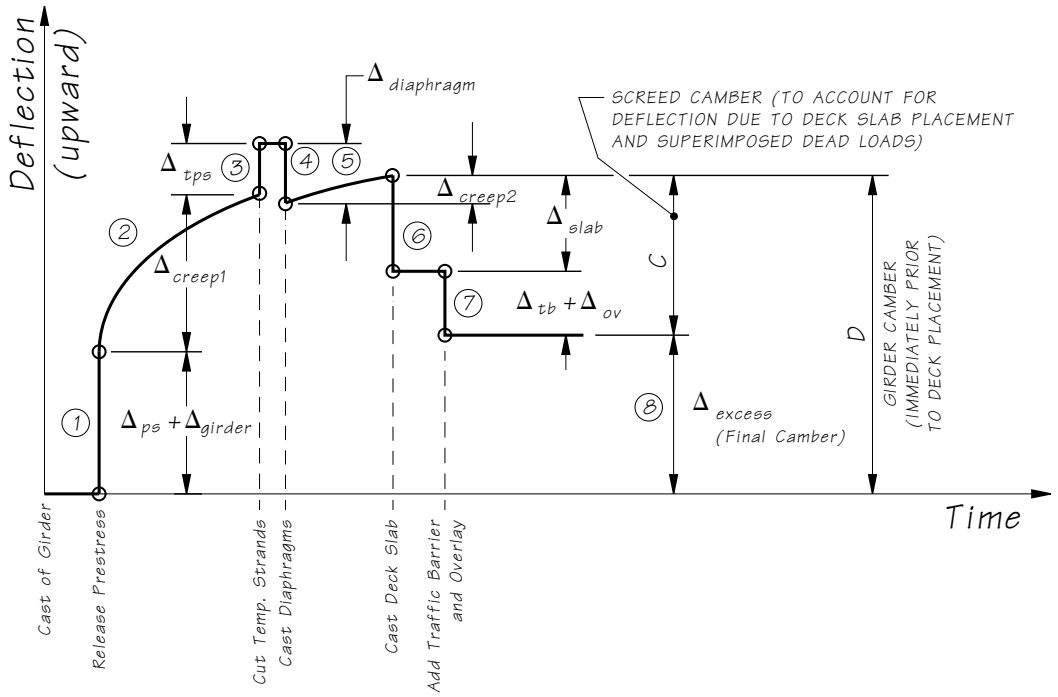

Prestressed Concrete Girder Camber
Figure 5.2.4-1

5.2.5 Construction Joints

Construction joints must divide the structure into a logical pattern of separate elements which also permit ease of manufacture and assembly.

The joint surfaces should be oriented perpendicular to the outer face of the element.

When construction joints are shown in the Plans for the convenience of the Contractor and are not structurally required, they shall be indicated as optional.

A. Types of Joints

Joints are either wide or match cast. Depending on their width, they may be filled with CIP concrete or grout. Match cast joints are normally bonded with an epoxy bonding agent. Dry match cast joints are not recommended.

B. Shear Keys

In order to assist shear transmission in wide joints, use a suitable system of keys. The shape of the keys may be chosen to suit a particular application and they can be either single keys or multiple keys. Single keys are generally large and localized whereas multiple keys generally cover as much of the joint surface area as is practical.

Single keys provide an excellent guide for erection of elements. Single keys are preferred for all match cast joints.

For all types of joints, the surfaces must be clean, free from grease and oil, etc. When using epoxy for bonding, the joints shall be lightly sandblasted to remove laitance. For CIP or other types of wide joints, the adjacent concrete surfaces shall be roughened and kept thoroughly wet, prior to construction of the joint. CIP joints are generally preferred.

5.2.6 Inspection Lighting and Access

A. Confined Spaces

See Section 10.8.1 for design requirements for confined spaces.

B. Access Hatch, Air Vent Holes and Inspection Lighting

Box girders with inside clear height of less than or equal to 4 feet do not require access, lighting, receptacles and ventilation. Utilities, longitudinal restrainers and other components requiring inspection or maintenance are not permitted inside the box girder cells.

Box girders with inside clear height greater than 4 feet but less than 6.5 feet shall have access, lighting, receptacles and ventilation provided inside each box girder cell containing utilities, longitudinal restrainers and other components requiring inspection or maintenance.

Box girders with inside clear height greater than or equal to 6.5 feet shall have access, lighting, receptacles and ventilation provided inside.

Access, lighting, receptacles and ventilation shall not be provided inside prestressed concrete tub girder cells. Utilities, longitudinal restrainers and other components requiring inspection or maintenance are not permitted inside the girder cells.

Access doors shall have a minimum 2′-6″ diameter or 2′-6″ square clear opening. Lock box latches shall be installed on all access doors accessible from ground level. Access hatches shall swing into the box girders and shall be placed at locations that do not impact traffic. Lighting and receptacle requirements shall conform to *Design Manual* Chapter 1040. Air vents shall conform to Figures 5.2.6-1 and 5.2.6-2.

Box girder penetrations greater than one inch in diameter through the exterior shall be covered with galvanized wire mesh screen to prevent vermin and birds from accessing the penetration and the interior of the box girder. The wires shall have a maximum spacing of 1 inch in both directions.

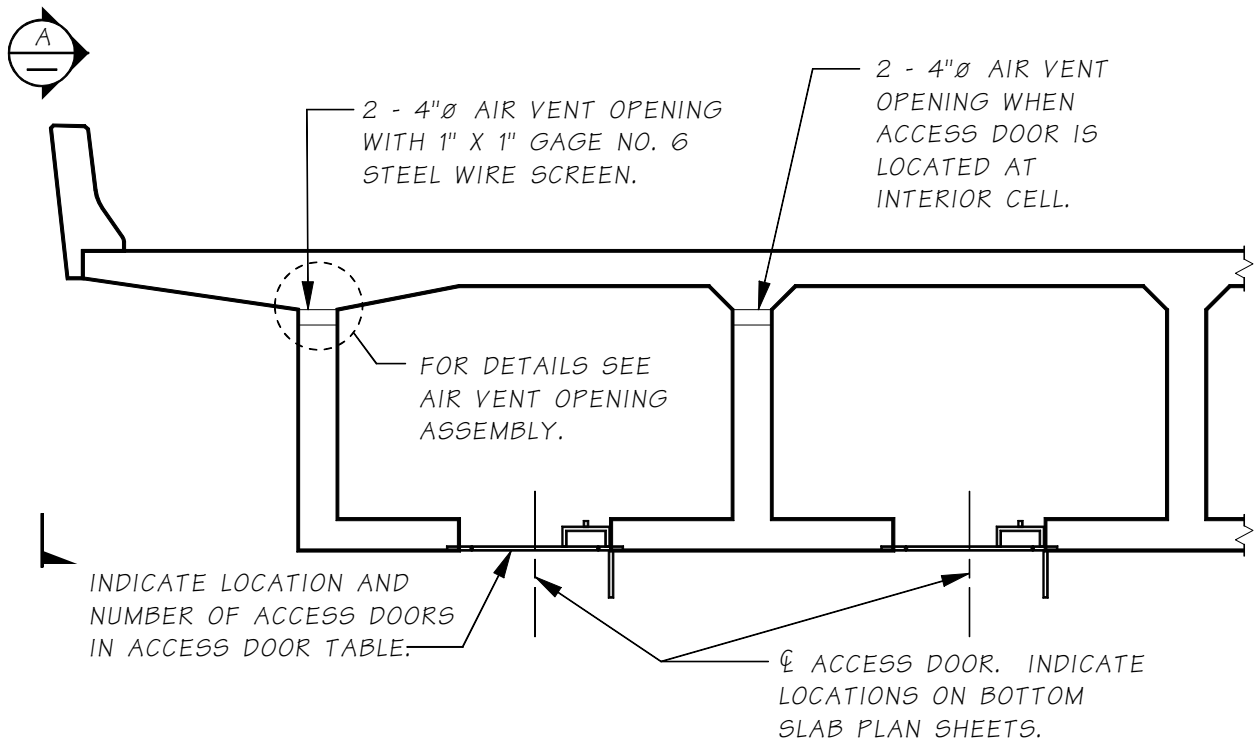

ELEVATION - AIR VENT HOLE IN WEBS

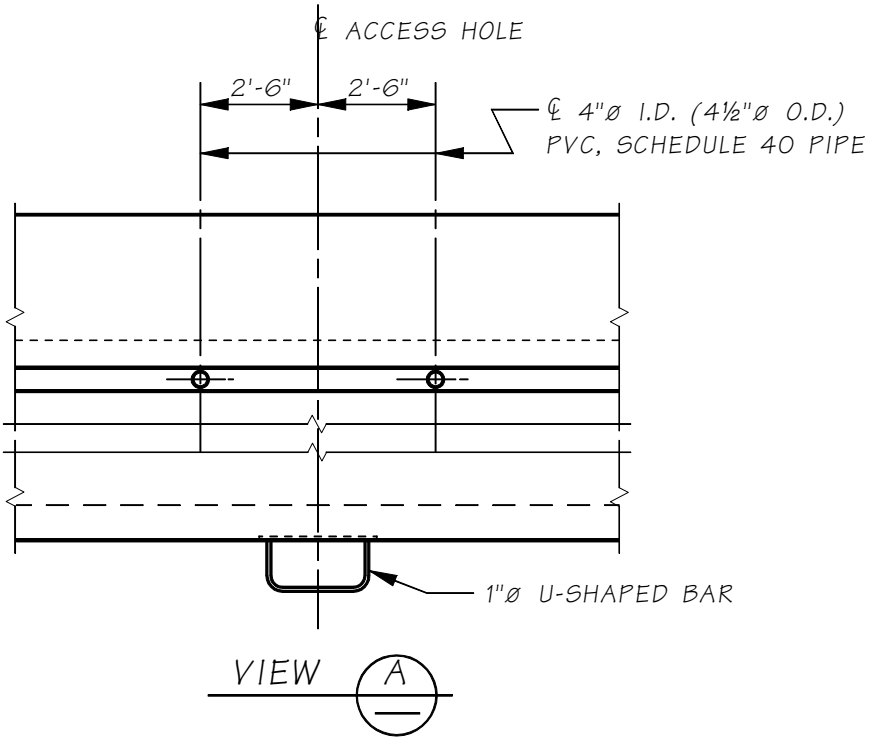

Access Hatch Details
Figure 5.2.6-1

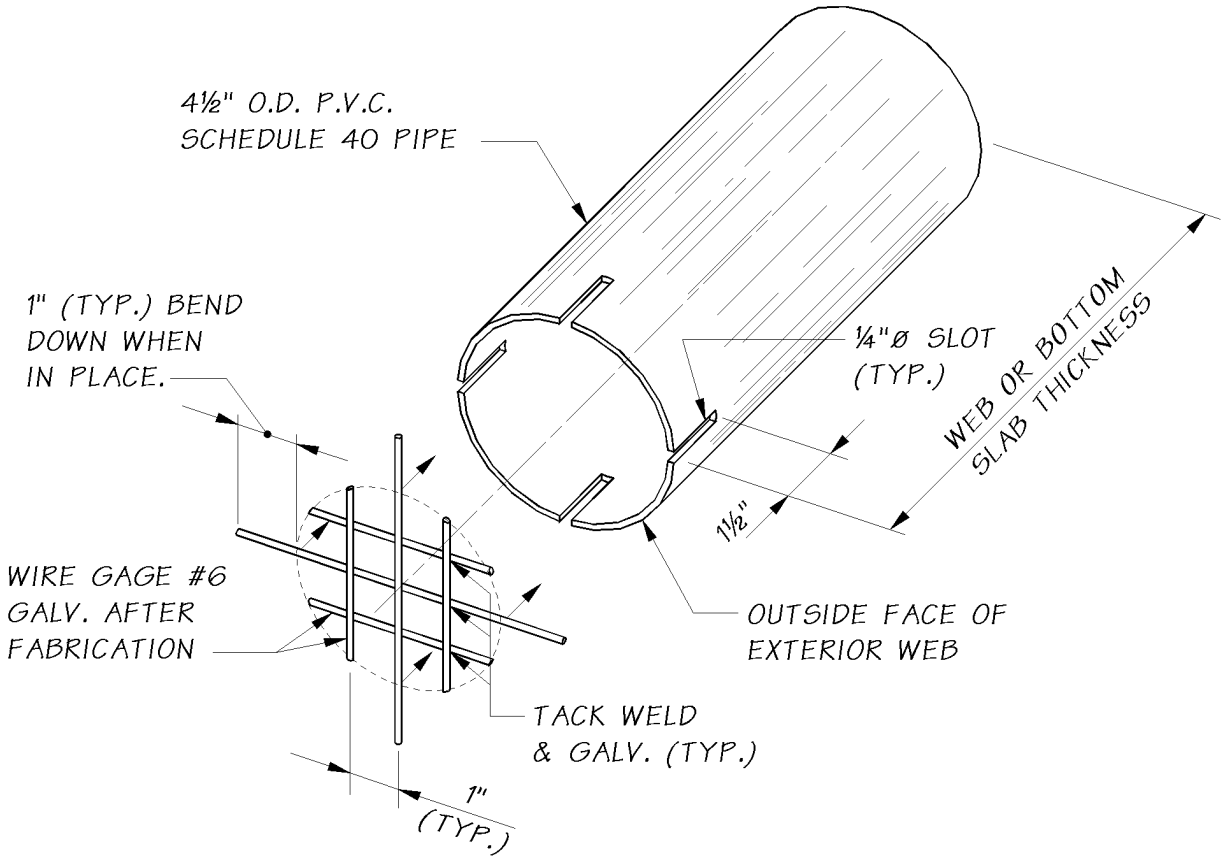

Air Vent Opening Detail
Figure 5.2.6-2

5.3 Reinforced Concrete Box Girder Bridges

Post-tensioning shall be required for all new CIP reinforced concrete single-span or multi-span box girder bridges.

The use of CIP reinforced concrete (RC) box girder bridges without post-tensioning shall be restricted to widening existing RC box girder bridges. RC box girder bridges may also be used for bridges with tight curvatures or irregular geometry upon the WSDOT Bridge Design Engineer's approval. Partial prestressing shall not be considered for design of RC box girders.

The performance and longevity of RC box girder bridges have been a major concern. Cracking in RC box girders are flexural in nature and are an inherent part of reinforced concrete design. RC box girders are designed for ultimate strength and checked for distribution of reinforcement for service conditions and control of cracking. This means that the concrete cracks under applied loads but the cracks are under control. Open cracks in RC box girders result in rebar corrosion and concrete deterioration, affecting the bridge longevity. Post-tensioning RC box girders eliminates cracks, limits corrosion, and improves structural performance.

The above requirements apply equally to RC T-beam and slab bridges. However, these types of superstructures are not encouraged. See also Sections 2.4.1.C and 2.4.1.D.

5.3.1 Box Girder Basic Geometries

A. Web Spacing

The most economical web spacing for ordinary box girder bridges varies from about 8 to 12 feet. Greater girder spacing requires some increase in both top and bottom slab thickness, but the cost of the additional concrete can be offset by decreasing the total number of girder stems. Fewer girder stems reduces the amount of form work required and can lower costs.

The number of girder stems can be reduced by cantilevering the top slab beyond the exterior girders. A deck overhang of approximately one-half the girder spacing generally gives satisfactory results. This procedure usually results in a more aesthetic as well as a more economical bridge.

For girder stem spacing in excess of 12 feet or cantilever overhang in excess of 6 feet, transverse post-tensioning shall be used.

B. Basic Dimensions

The basic dimensions for concrete box girders with vertical and sloped exterior webs are shown in Figures 5.3.1-1 and 5.3.1-2, respectively.

1. Top Slab Thickness, T1 (includes ½″ wearing surface)

$T1 = \frac{12(S+10)}{30}$ but not less than 7″ with overlay or 7.5″ without overlay.

2. Bottom Slab Thickness, T2

i. Near center span

$T2 = \frac{12\,S_{clr}}{16}$ but not less than 5.5″ (normally 6.0″ is used).

ii. Near intermediate piers

Thickening of the bottom slab is often used in negative moment regions to control compressive stresses that are significant.

Transition slope = 24:1 (see T2 in Figure 5.3.1-1).

3. Girder Stem (Web) Thickness, T3

i. **Near Center Span**

Minimum T3 = 9.0″ — vertical

Minimum T3 = 10.0″ — sloped

ii. **Near Supports**

Thickening of girder stems is used in areas adjacent to supports to control shear requirements.

Changes in girder web thickness shall be tapered for a minimum distance of 12 times the difference in web thickness.

Maximum T3 = T3 + 4.0″ maximum

Transition length = 12 × (difference in web thickness)

4. Intermediate Diaphragm Thickness, T4 and Diaphragm Spacing

i. For tangent and curved bridge with R > 800 feet

T4 = 0″ (diaphragms are not required.)

ii. For curved bridge with R < 800 feet

T4 = 8.0″

Diaphragm spacing shall be as follows:

For 600′ < R < 800′ at ½ pt. of span.

For 400′ < R < 600′ at ⅓ pt. of span.

For R < 400′ at ¼ pt. of span.

C. Construction Considerations

Review the following construction considerations to minimize constructability problems:

1. Construction joints at slab/stem interface or fillet/stem interface at top slab are appropriate.
2. All construction joints to have roughened surfaces.
3. Bottom slab is parallel to top slab (constant depth).
4. Girder stems are vertical.

5. Dead load deflection and camber to nearest ⅛″.
6. Skew and curvature effects have been considered.
7. Thermal effects have been considered.
8. The potential for falsework settlement is acceptable. This always requires added stirrup reinforcement in sloped outer webs.

D. Load Distribution

1. Unit Design

According to the AASHTO LRFD, the entire slab width shall be assumed effective for compression. It is both economical and desirable to design the entire superstructure as a unit rather than as individual girders. When a reinforced box girder bridge is designed as an individual girder with a deck overhang, the positive reinforcement is congested in the exterior cells. The unit design method permits distributing all girder reinforcement uniformly throughout the width of the structure.

2. Dead Loads

Include additional D.L. for top deck forms:

5 pounds per square foot of the area.

10 pounds per square foot if web spacing > 10′-0″.

3. Live Load

See Section 3.9.4 for live load distribution to superstructure and substructure.

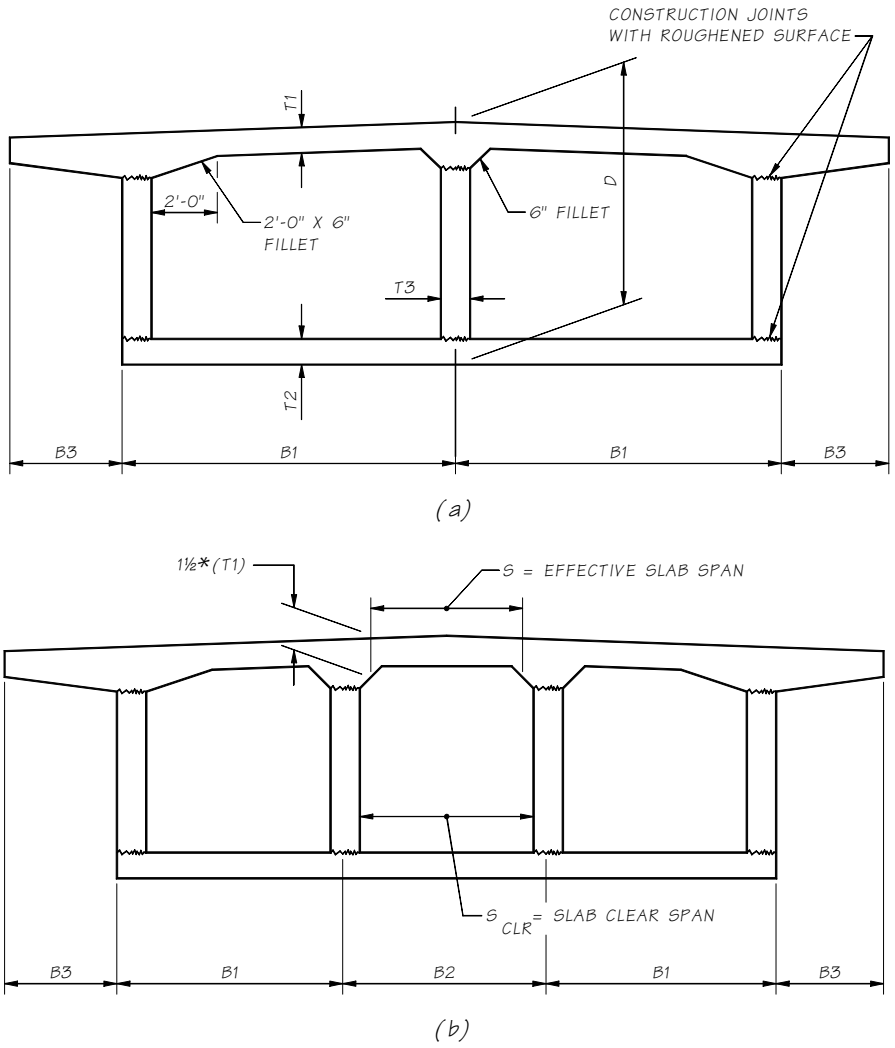

Basic Dimensions–Vertical Webs
Figure 5.3.1-1

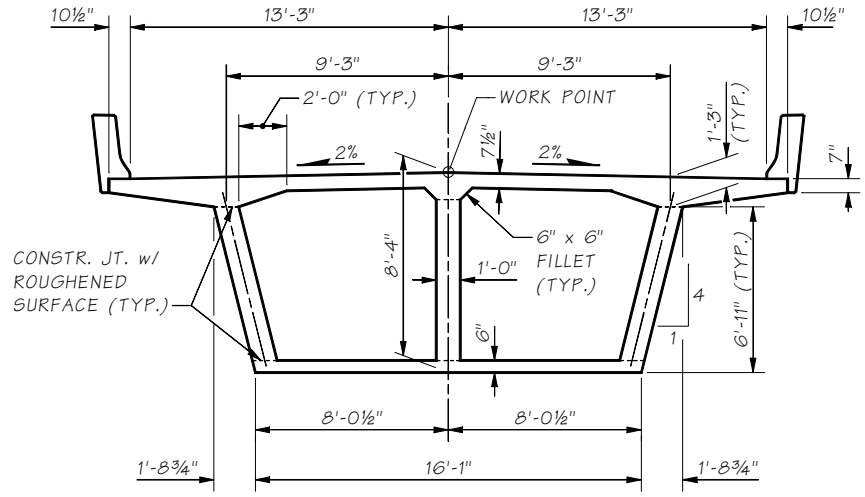

a - 2% CROWN

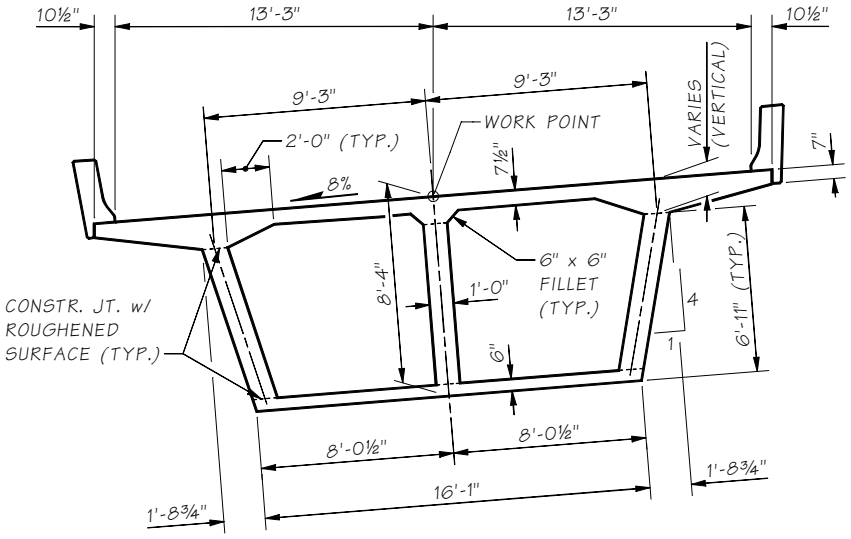

b - 8% SUPERELEVATION

BASIC DIMENSIONS
SLOPED WEBS

Dimensions are shown for demonstration only

Basic Dimensions–Sloped Webs
Figure 5.3.1-2

5.3.2 Reinforcement

This section discusses flexural and shear reinforcement for top slab, bottom slab, webs, and intermediate diaphragms in box girders.

A. Top Slab Reinforcement

1. Near Center of Span

Figure 5.3.2-1 shows the reinforcement required near the center of the span and Figure 5.3.2-2 shows the overhang reinforcement.

a. Transverse reinforcing in the top and bottom layers to transfer the load to the main girder stems.

b. Bottom longitudinal "distribution reinforcement" in the middle half of the deck span in S_{eff} is provided to aid distributing the wheel loads.

c. Top longitudinal "temperature and shrinkage reinforcement."

2. Near Intermediate Piers

Figure 5.3.2-3 illustrates the reinforcement requirement near intermediate piers.

a. Transverse reinforcing same as center of span.

b. Longitudinal reinforcement to resist negative moment (see Figure 5.3.2-3).

c. "Distribution of flexure reinforcement" to limit cracking shall satisfy the requirement of AASHTO LRFD Section 5.6.7 for class 2 exposure condition.

3. Bar Patterns

i. **Transverse Reinforcement**

It is preferable to place the transverse reinforcement normal to bridge center line and the areas near the expansion joint and bridge ends are reinforcement by partial length bars.

ii. **Longitudinal Reinforcement**

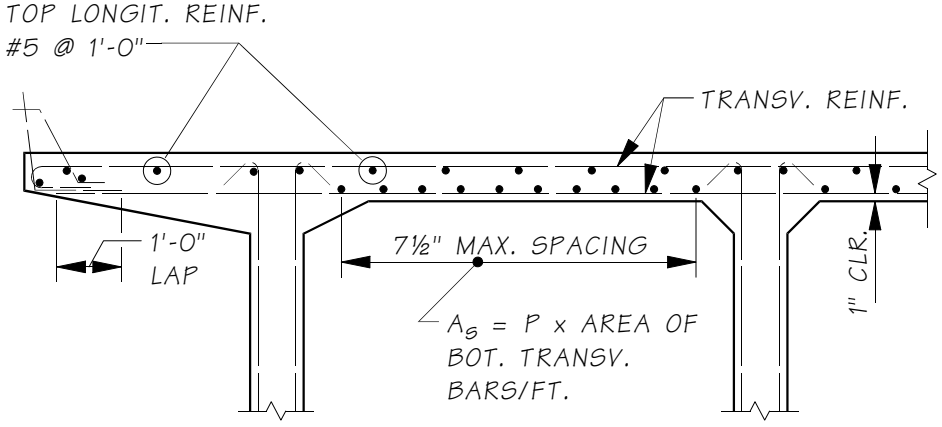

$$P = \frac{220}{\sqrt{S}} \qquad (MAX. = .67)$$

Partial Section Near Center of Span
Figure 5.3.2-1

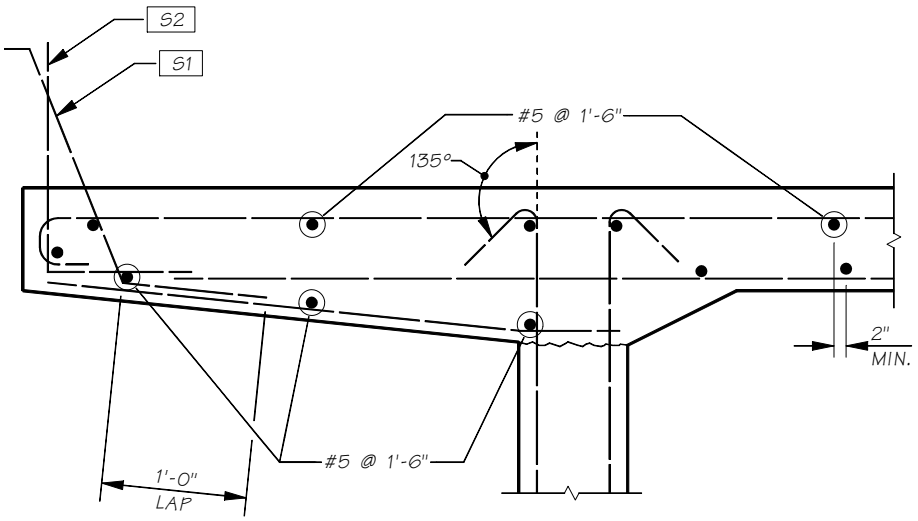

Overhang Detail
Figure 5.3.2-2

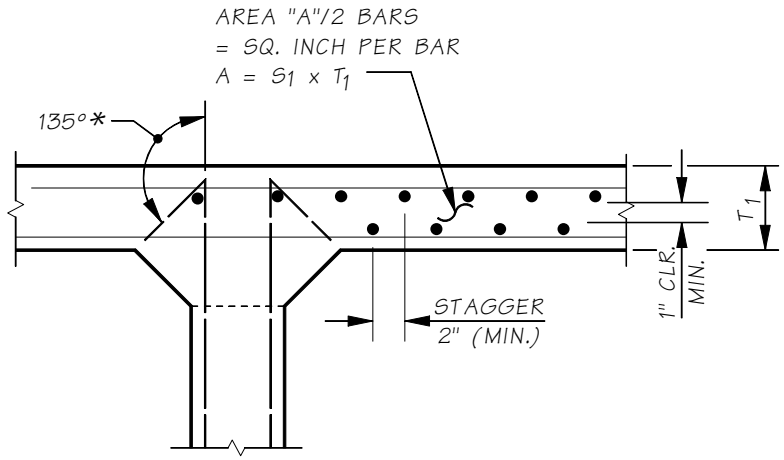

* ALL REBARS SHALL BE EPOXY COATED, BEND STIRRUPS 135 DEGREES. DO NOT EPOXY COAT STIRRUPS.

Top Slab Flexural Reinforcing Near Intermediate Pier
Figure 5.3.2-3

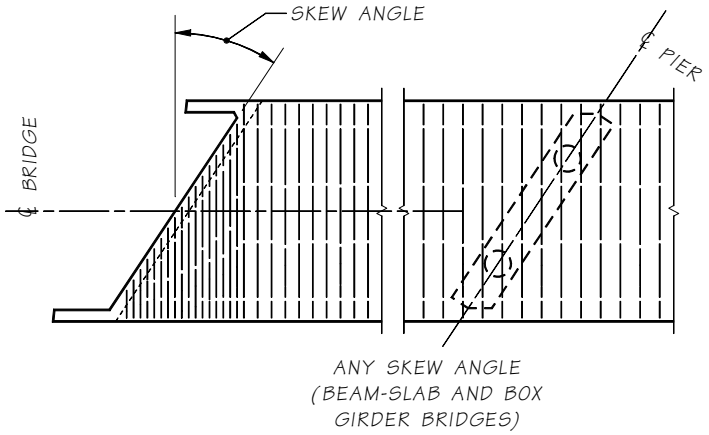

Partial Plans at Abutments
Figure 5.3.2-4

B. Bottom Slab Reinforcement

1. Near Center of Span

Figure 5.3.2-5 shows the reinforcement required near the center of the span.

a. Minimum transverse "distributed reinforcement."

A_s = 0.005 × flange area with ½A_s distributed equally to each surface.

b. Longitudinal "main reinforcement" to resist positive moment.

c. Check "distribution of flexure reinforcement" to limit cracking in accordance with AASHTO LRFD Section 5.6.7 for class 2 exposure condition.

d. Add steel for construction load (sloped outer webs).

2. Near Intermediate Piers

Figure 5.3.2-6 shows the reinforcement required near intermediate piers.

a. Minimum transverse reinforcement same as center of span.

b. Minimum longitudinal "temperature and shrinkage reinforcement." A_s = 0.004 × flange area with ½A_s distributed equally to each face.

c. Add steel for construction load (sloped outer webs).

3. Bar Patterns

i. **Transverse Reinforcement**

All bottom slab transverse bars shall be bent at the outside face of the exterior web. For a vertical web, the tail splice will be 1′-0″ and for sloping exterior web 2′-0″ minimum splice with the outside web stirrups. See Figure 5.3.2-7.

ii. **Longitudinal Reinforcement**

For longitudinal reinforcing bar patterns, see Figures 5.3.2-5 and 5.3.2-6.

C. Web Reinforcement

1. Vertical Stirrups

Vertical stirrups for a reinforced concrete box section is shown in Figure 5.3.2-8.

The web reinforcement shall be designed for the following requirements:

Vertical shear requirements.

- Out of plane bending on outside web due to live load on cantilever overhang.
- Horizontal shear requirements for composite flexural members.
- Minimum stirrups shall be:

$$\frac{A_v}{s} = 50\frac{b_w}{f_y} \qquad (5.3.2\text{-}1)$$

but not less than #5 bars at 1′-6″,

Where: b_W is the number of girder webs x T3

2. Web Longitudinal Reinforcement

Web longitudinal reinforcement for reinforced concrete box girders is shown in Figures 5.3.2-8 and 5.3.2-9. The area of skin reinforcement A_{sk} per foot of height on each side face shall be:

$$A_{sk} \geq 0.012(d - 30) \quad (5.3.2\text{-}2)$$

Reinforcing steel spacing < Web thickness (T3) or 12″.

The maximum spacing of skin reinforcement shall not exceed the lesser of d/6 and 12″. Such reinforcement may be included in strength computations if a strain compatibility analysis is made to determine stresses in the individual bars or wires. The total area of longitudinal skin reinforcement in both faces need not exceed one half of the required flexural tensile reinforcement.

For CIP sloped outer webs, increase inside stirrup reinforcement and bottom slab top transverse reinforcement as required for the web moment locked-in during construction of the top slab. This moment about the bottom corner of the web is due to tributary load from the top slab concrete placement plus 10 psf form dead load. See Figure 5.3.2-10 for typical top slab forming.

D. Intermediate Diaphragm

Intermediate diaphragms are not required for bridges on tangent alignment or curved bridges with an inside radius of 800 feet or greater.

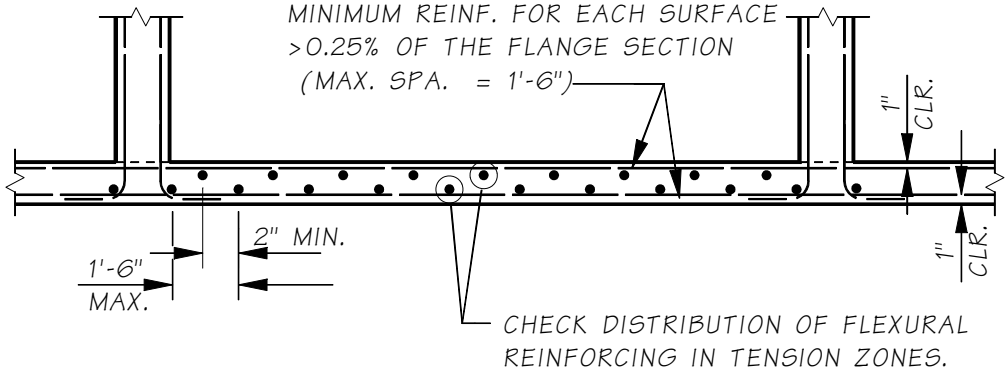

Bottom Slab Reinforcement Near Center of Span
Figure 5.3.2-5

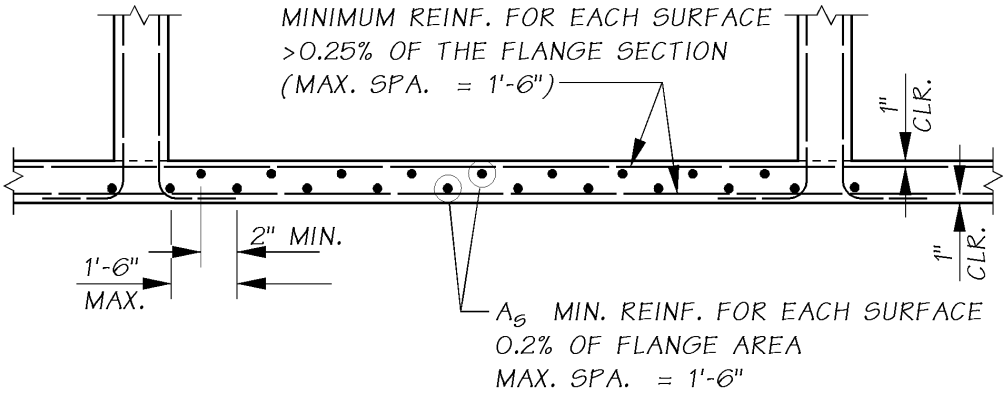

Bottom Slab Reinforcement Near Intermediate Pier
Figure 5.3.2-6

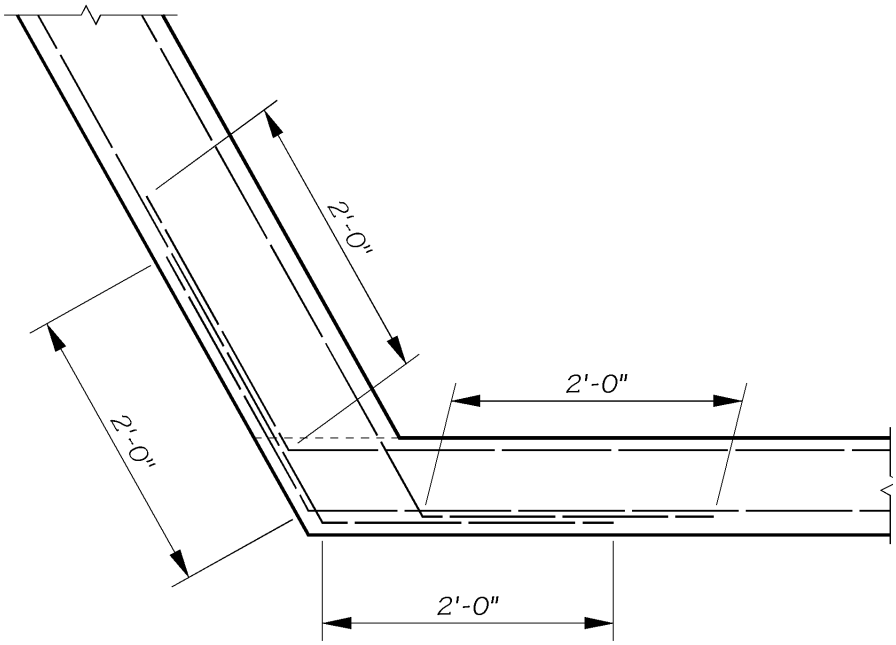

SLOPED WEB

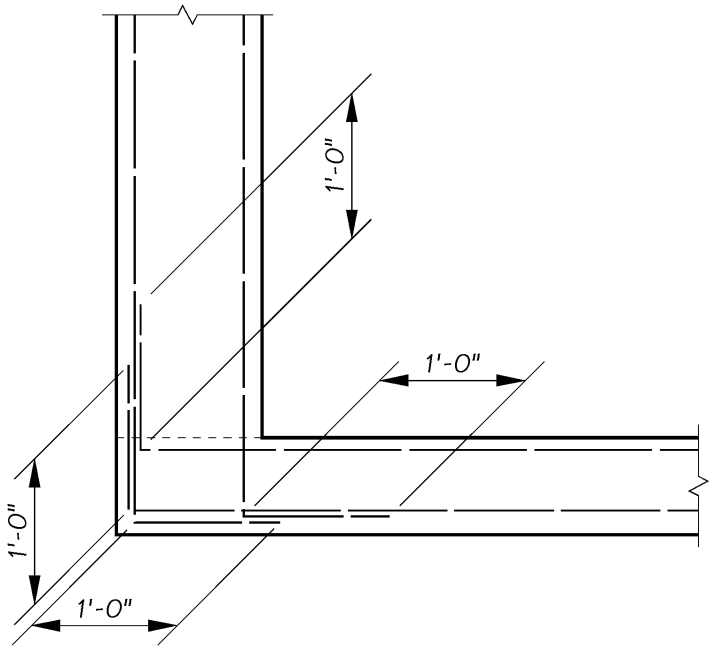

VERTICAL WEB

Web Reinforcement
Figure 5.3.2-7

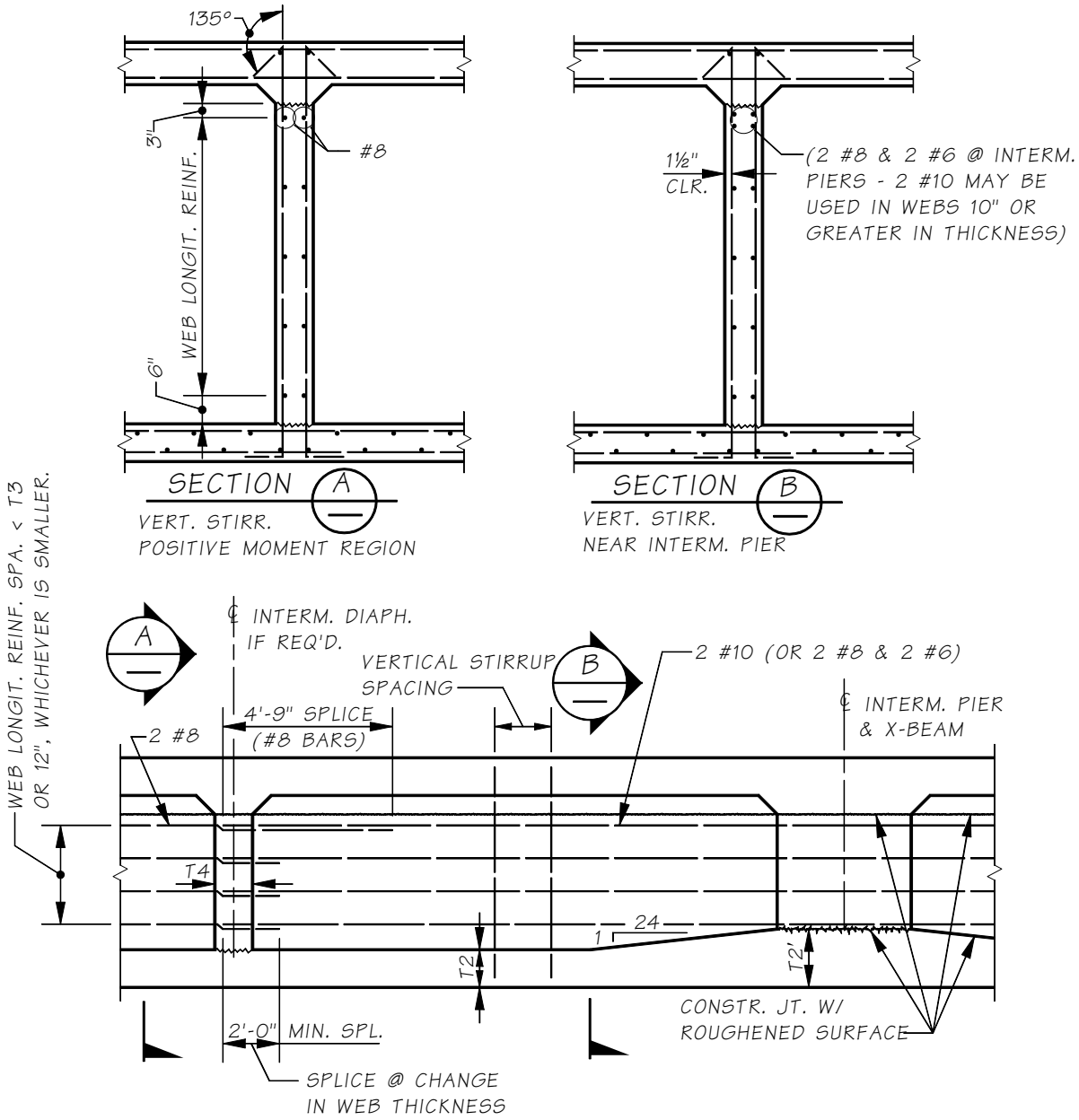

PARTIAL LONGITUDINAL GIRDER SECTION

Use 2 #10 (2 #8 & 2 #6 for 10" or less webs) at dead load negative moment region near piers. The length of shall be extended 35 diameters beyond the dead load point of inflecton. Do not splice the #10 (#8) bars near the pier. The #6 bars may be spliced at center pier. Use 2 #8 only for the positive moment region.

Web Reinforcement Details
Figure 5.3.2-8

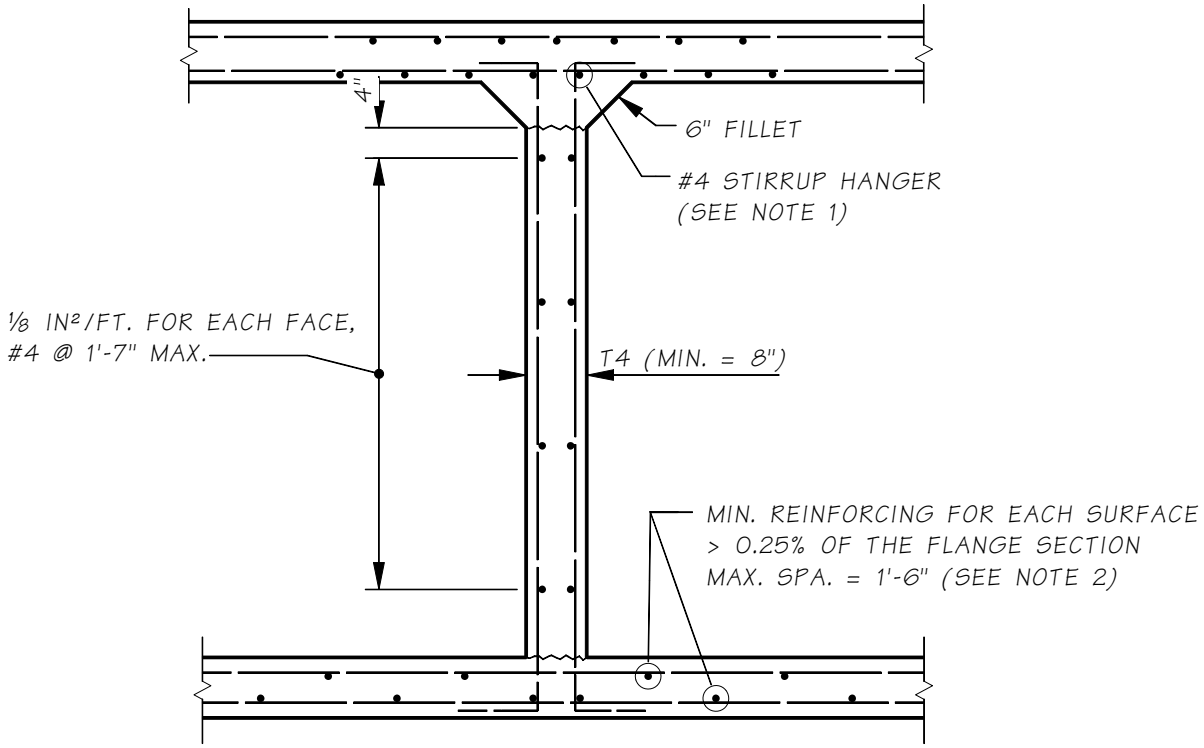

1. Stirrup hanger must be placed above longitudinal steel when diaphragm is skewed and slab reinforcement is placed normal to center of roadway. (Caution: Watch for the clearance with longitudinal steel.)

2. The reinforcement should have at least one splice to facilitate proper bar placement.

Web Reinforcement Details
Figure 5.3.2-9

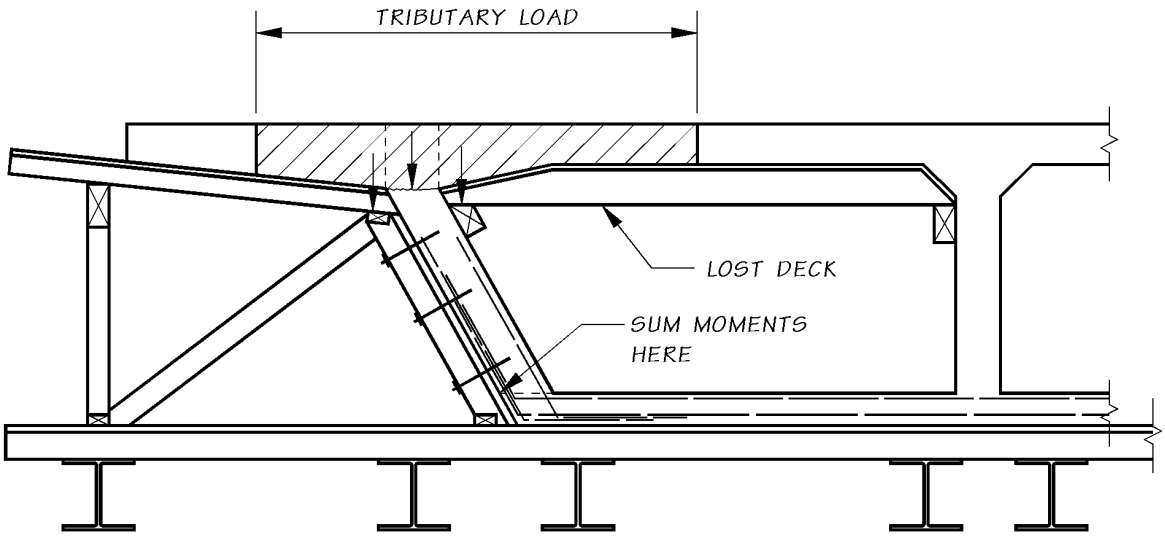

Notes:

1. The diagonal brace supports web forms during web pour. After cure, the web is stiffer than the brace, and the web attracts load from subsequent concrete placements.
2. The tributary load includes half the overhang because the outer web form remains tied to and transfers load to the web which is considerably stiffer than the formwork.
3. Increase web reinforcement for locked-in construction load due to top slab forming for sloped web box girders.

Typical Top Slab Forming for Sloped Web Box Girder
Figure 5.3.2-10

5.3.3 Crossbeam

A. General

Crossbeam shall be designed in accordance with the requirements of strength limit state design of AASHTO LRFD and shall satisfy the serviceability requirements for crack control.

B. Basic Geometry

For aesthetic purposes, it is preferable to keep the crossbeam within the superstructure so that the bottom slab of the entire bridge is a continuous plane surface interrupted only by the columns. Although the depth of the crossbeam may be limited, the width can be made as wide as necessary to satisfy design requirements. Normally, it varies from 3 feet to the depth of box but is not less than the column size plus 1′-0″ to allow placement of the column reinforcement as shown in see Figures 5.3.3-1 and 5.3.3-2.

Crossbeams on box girder type of construction shall be designed as a T beam utilizing the flange in compression, assuming the deck slab acts as a flange for positive moment and bottom slab a flange for negative moment. The effective overhang of the flange on a cantilever beam shall be limited to six times the flange thickness.

The bottom slab thickness is frequently increased near the crossbeam in order to keep the main box girder compressive stresses to a desirable level for negative girder moments as shown in Figures 5.3.3-1 and 5.3.3-2. This bottom slab flare also helps resist negative crossbeam moments. Consideration should be given to flaring the bottom slab at the crossbeam for designing the cap even if it is not required for resisting main girder moments.

C. Loads

For concrete box girders the superstructure dead load shall be considered as uniformly distributed over the crossbeam. For concrete box girders the live load shall be considered as the truck load directly to the crossbeam from the wheel axles. Truck axles shall be moved transversely over the crossbeam to obtain the maximum design forces for the crossbeam and supporting columns.

D. Reinforcement Design and Details

The crossbeam section consists of rectangular section with overhanging deck and bottom slab if applicable. The effective width of the crossbeam flange overhang shall be taken as the lesser of:

- 6 times slab thickness,
- ⅒ of column spacing, or
- 1/20 of crossbeam cantilever as shown in Figure 5.3.3-3.

The crossbeam shall have a minimum width of column dimension plus 6″.

Crossbeam is usually cast to the fillet below the top slab. To avoid cracking of concrete on top of the crossbeam, construction reinforcement shall be provided at approximately 3″ below the construction joint. The design moment for construction reinforcement shall be the factored negative dead load moment due to the weight of crossbeam and adjacent 10′ of superstructure each side. The total amount of construction reinforcement shall be adequate to develop an ultimate moment at the critical section at least 1.2 times the cracking moment M_{cr}.

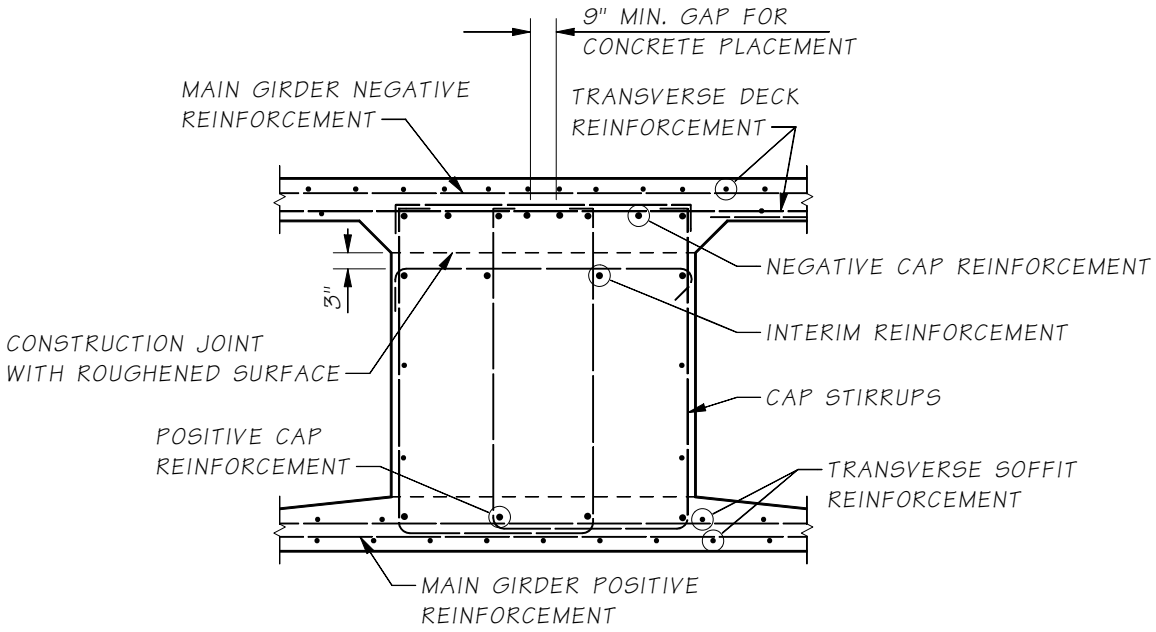

Crossbeam Top Reinforcement for Skew Angle ≤ 25°
Figure 5.3.3-1

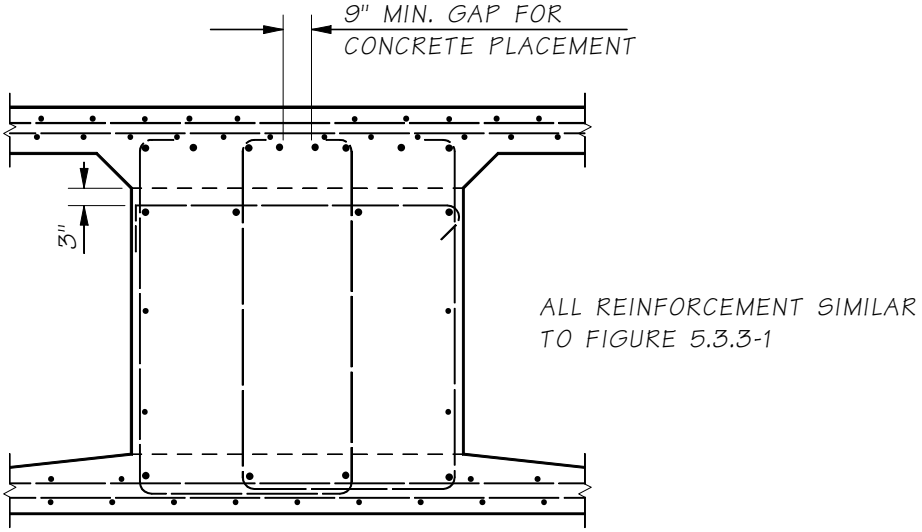

Crossbeam Top Reinforcement for Skew Angle > 25°
Figure 5.3.3-2

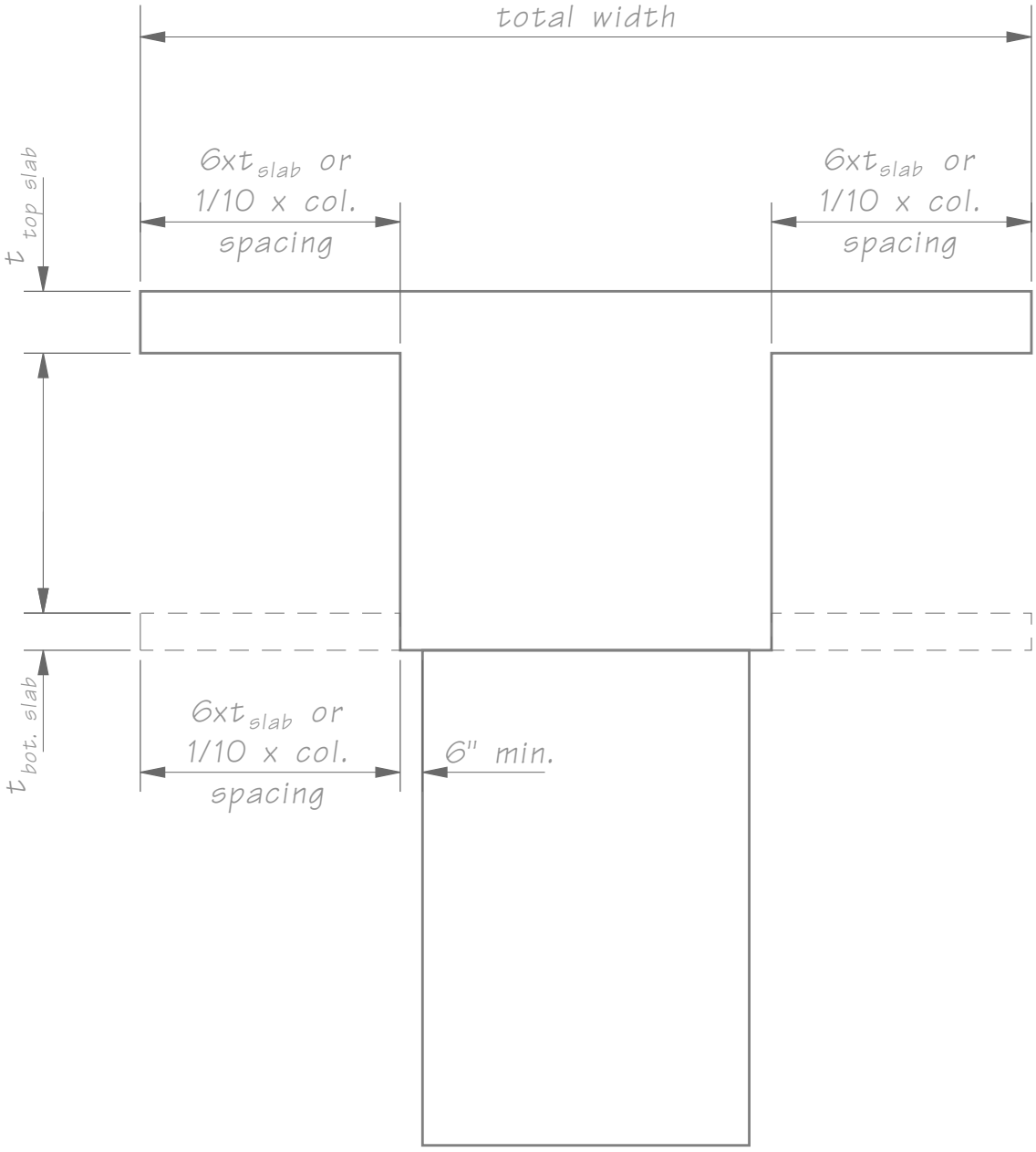

Effective Width of Crossbeam
Figure 5.3.3-3

Special attention should be given to the details to ensure that the column and crossbeam reinforcement will not interfere with each other. This can be a problem especially when round columns with a great number of vertical bars must be meshed with a considerable amount of positive crossbeam reinforcement passing over the columns.

1. Top Reinforcement

The negative moment critical section shall be at the ¼ point of the square or equivalent square columns.

i. **When Skew Angle ≤ 25°**

If the bridge is tangent or slightly skewed deck transverse reinforcement is normal or radial to centerline bridge, the negative cap reinforcement can be placed either in contact with top deck negative reinforcement (see Figure 5.3.3-1) or directly under the main deck reinforcement.

ii. **When Skew Angle > 25°**

When the structure is on a greater skew and the deck steel is normal or radial to the longitudinal centerline of the bridge, the negative cap reinforcement should be lowered to below the main deck reinforcement (see Figure 5.3.3-2).

iii. **To avoid cracking of concrete**

Interim reinforcement is required below the construction joint in crossbeams.

2. Skin Reinforcement

Longitudinal skin reinforcement shall be provided in accordance with AASHTO LRFD Section 5.6.7.

5.3.4 End Diaphragm

A. Basic Geometry

Bearings at the end diaphragms are usually located under the girder stems to transfer loads directly to the pier as shown in Figure 5.3.4-1. In this case, the diaphragm width shall be equal to or greater than bearing grout pads as shown Figure 5.3.4-2.

Designer shall provide access space for maintenance and inspection of bearings.

Allowance shall be provided to remove and replace the bearings. Lift point locations, jack capacity, number of jacks, and maximum permitted lift shall be shown in the plan details.

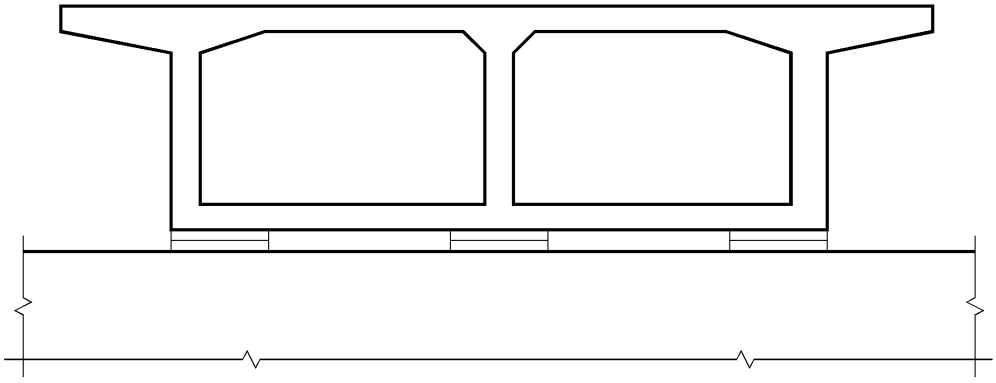

Bearing Locations at End Diaphragm
Figure 5.3.4-1

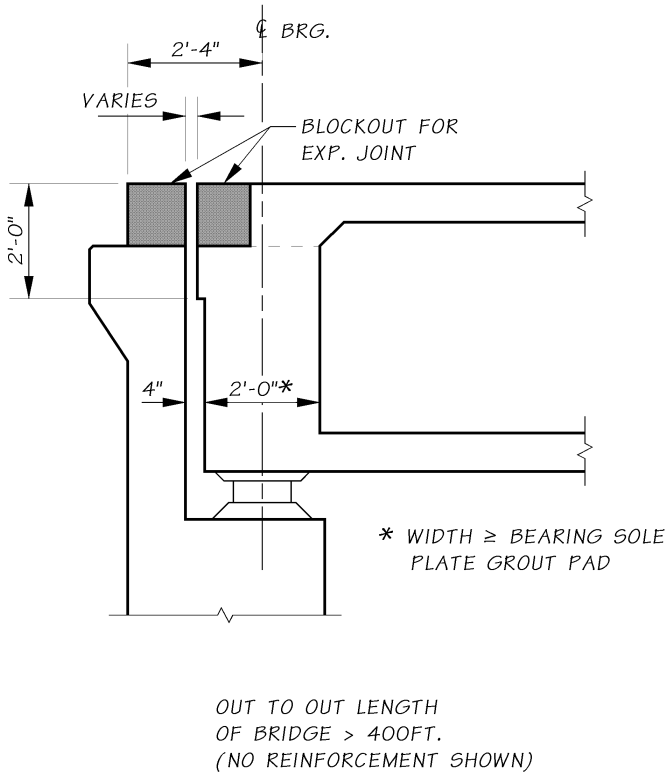

L-shape Abutment End Diaphragm
Figure 5.3.4-2

The most commonly used type of end diaphragm is shown in Figure 5.3.4-3. The dimensions shown here are used as a guideline and should be modified if necessary. This end diaphragm is used with a stub abutment and overhangs the stub abutment. It is used on bridges with an overall length less than 400 feet. If the overall length exceeds 400 feet, an L-shape abutment should be used.

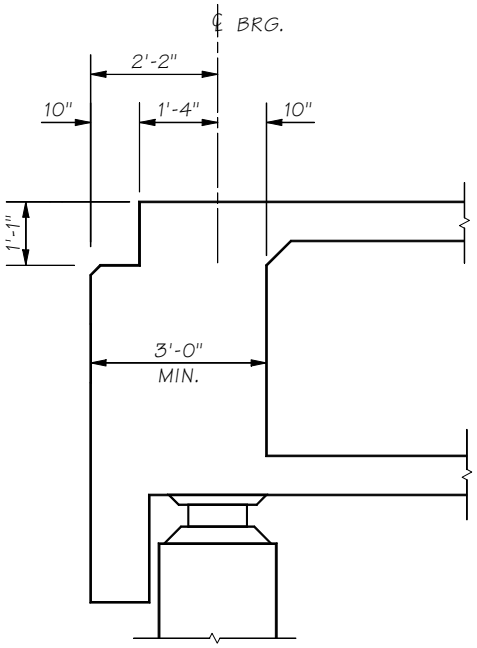

End Diaphragm with Stub Abutment
Figure 5.3.4-3

B. Reinforcing Steel Details

Typical reinforcement details for an end diaphragm are shown in Figure 5.3.4-4.

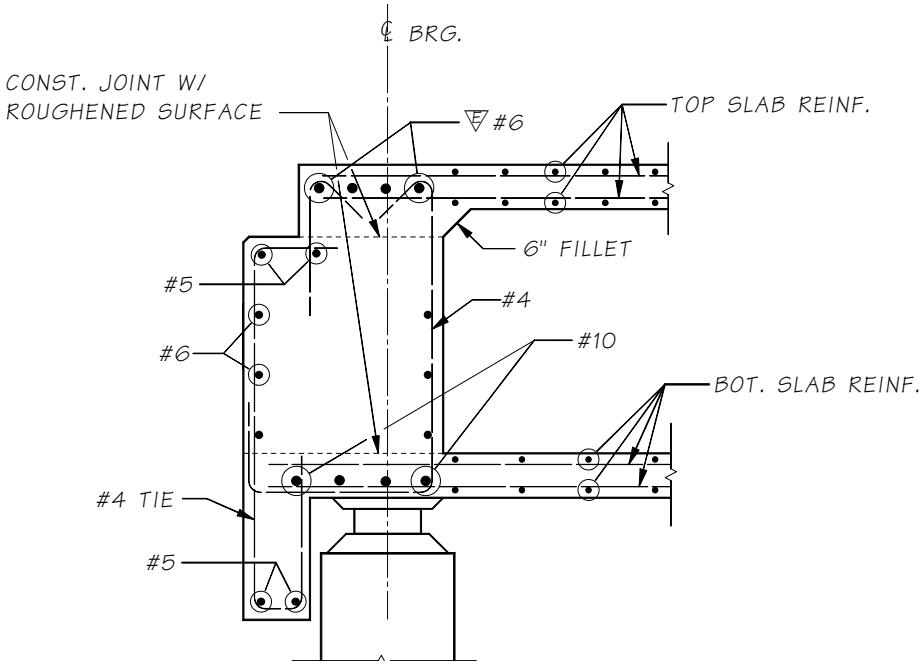

Typical End Diaphragm Reinforcement
Figure 5.3.4-4

5.3.5 Dead Load Deflection and Camber

Camber is the adjustment made to the vertical alignment to compensate for the anticipated dead load deflection and the long-term deflection caused by shrinkage and creep. Estimating long-term deflection and camber for reinforced concrete flexural members shall be based on the creep coefficient given in Section 5.1.1E. Alternatively, Table 5.3.5-1 may be used for long-term camber multipliers.

	Multiplier Coefficient
Girder Adjacent to Existing/Stage Construction	
Deflection (downward) — apply to the elastic deflection due to the weight of member	1.90
Deflection (downward) — apply to the elastic deflection due to superimposed dead load only	2.20
Girder Away From Existing/Stage Construction	
Deflection (downward) — apply to the elastic deflection due to the weight of member	2.70
Deflection (downward) — apply to the elastic deflection due to superimposed dead load only	3.00

Long-term Camber Multipliers
Table 5.3.5-1

In addition to dead load deflection, forms and falsework tend to settle and compress under the weight of freshly placed concrete. The amount of this take-up is dependent upon the type and design of the falsework, workmanship, type and quality of materials and support conditions. The camber shall be modified to account for anticipated take-up in the falsework.

5.3.6 Thermal Effects

Concrete box girder bridges are subjected to stresses and/or movements resulting from temperature variation. Temperature effects result from time-dependent variations in the effective bridge temperature and from temperature differentials within the bridge superstructure.

A. Effective Bridge Temperature and Movement

Proper temperature expansion provisions are essential in order to ensure that the structure will not be damaged by thermal movements. These movements, in turn, induce stresses in supporting elements such as columns or piers, and result in horizontal movement of the expansion joints and bearings. For more details see Chapter 8.

B. Differential Temperature

Although time-dependent variations in the effective temperature have caused problems in both reinforced and prestressed concrete bridges, detrimental effects caused by temperature differential within the superstructure have occurred only in prestressed bridges. Therefore, computation of stresses and movements resulting from the vertical temperature gradients is not included in this chapter. For more details, see AASHTO Guide Specifications, Thermal Effects on Concrete Bridge Superstructures dated 1989.

5.3.7 Hinges

Hinges are one of the weakest links of box girder bridges subject to earthquake forces and it is desirable to eliminate hinges or reduce the number of hinges. For more details on the design of hinges, see Section 5.4.

Designer shall provide access space or pockets for maintenance and inspection of bearings.

Allowance shall be provided to remove and replace the bearings. Lift point locations, maximum lift permitted, jack capacity, and number of jacks shall be shown in the hinge plan details.

5.3.8 Drain Holes

Drain holes shall be placed in the bottom slab at the low point of each cell to drain curing water during construction and any rain water that leaks through the deck slab. Additional drains shall be provided as a safeguard against water accumulation in the cell (especially when waterlines are carried by the bridge). In some instances, drainage through the bottom slab is difficult and other means shall be provided (i.e., cells over large piers and where a sloping exterior web intersects a vertical web). In this case, a horizontal drain shall be provided through the vertical web. Figure 5.3.8-1 shows drainage details for the bottom slab of concrete box girder bridges with steel wire screen.

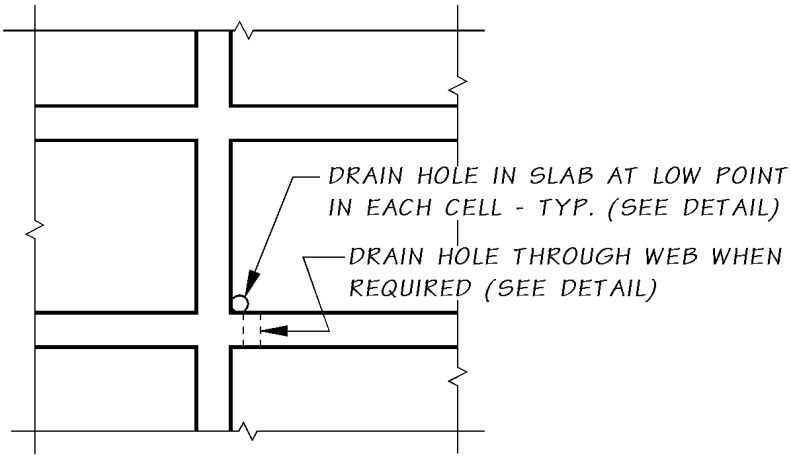

DRAIN HOLES
SHOWN ON FRAMING PLAN

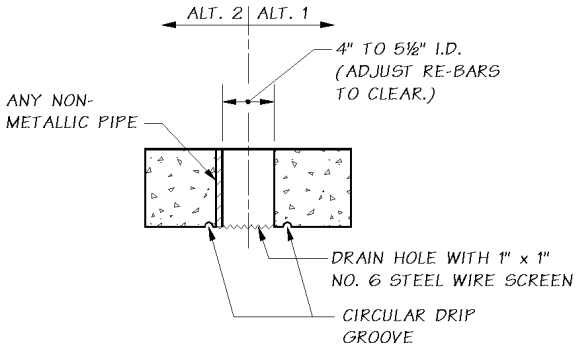

BOTTOM SLAB
DRAIN HOLE DETAIL

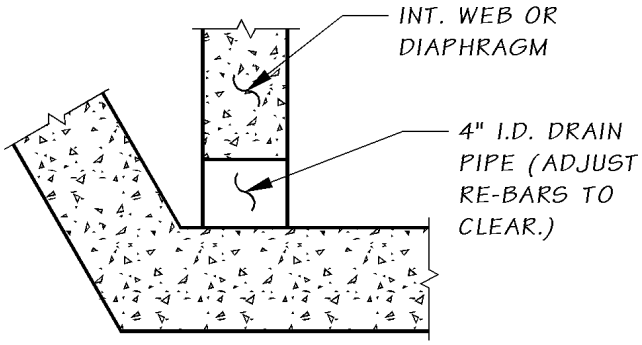

WEB DRAIN
HOLE DETAIL

Drain Hole Details
Figure 5.3.8-1

5.4 Hinges and Inverted T-Beam Pier Caps

Hinges and inverted T-beam pier caps require special design and detailing considerations. Continuous hinge shelves (both top and bottom projecting shelves) and continuous ledges of inverted T-beam pier caps, which support girders, are shown in Figure 5.4-1. In each case, vertical tensile forces (hanger tension) act at the intersection of the web and the horizontal hinge shelf or ledge. In the ledges of inverted T-beam pier caps, passage of live loads may also cause reversing torsional stresses which together with conventional longitudinal shear and bending produce complex stress distributions in the ledges[7, 8].

Figure 5.4-2 provides minimum shelf or ledge support lengths (N) and provides positive longitudinal linkage (e.g., earthquake restrainers) in accordance with the current AASHTO LRFD *Guide Specifications for Seismic Design* requirements. Design considerations for beam ledges, inverted T-beam and hinges are given in AASHTO LRFD Section 5.8.4.3.

Inverted T-beam pier caps shall not be used for prestressed concrete girder bridges unless approved by the WSDOT Bridge Design Engineer.

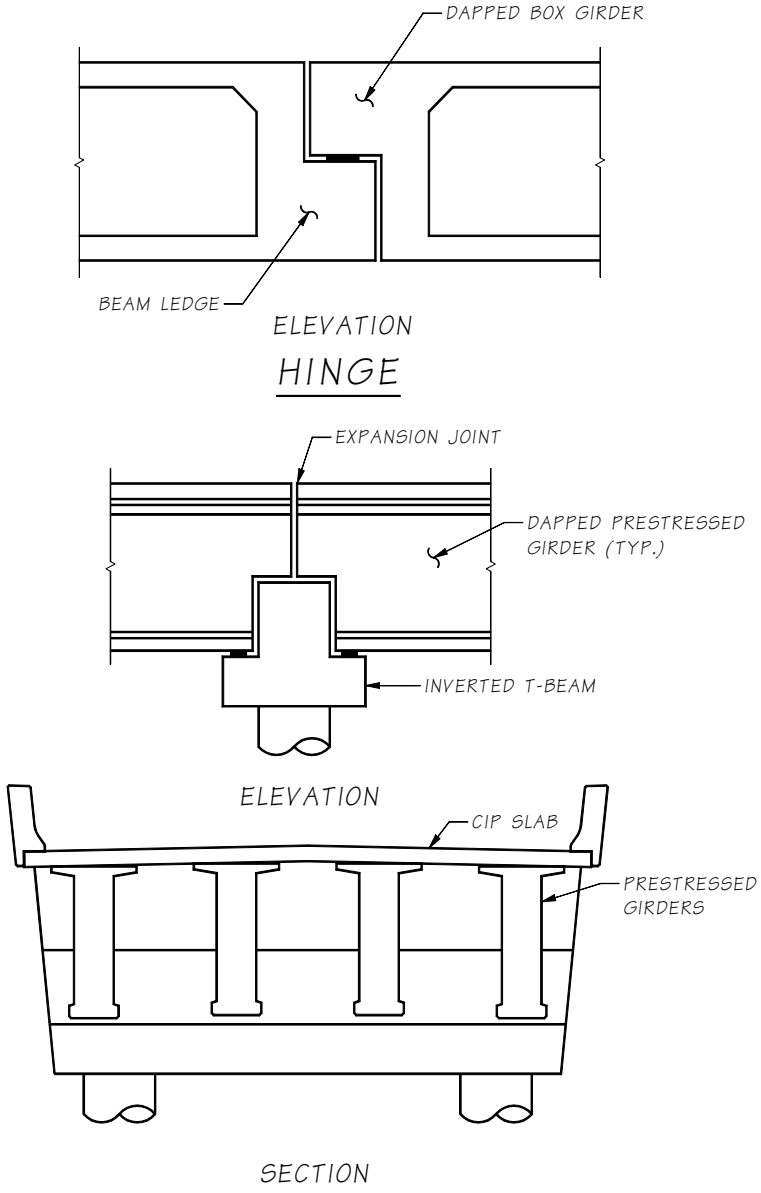

Hinge and Inverted T-Beam Pier Cap
Figure 5.4-1

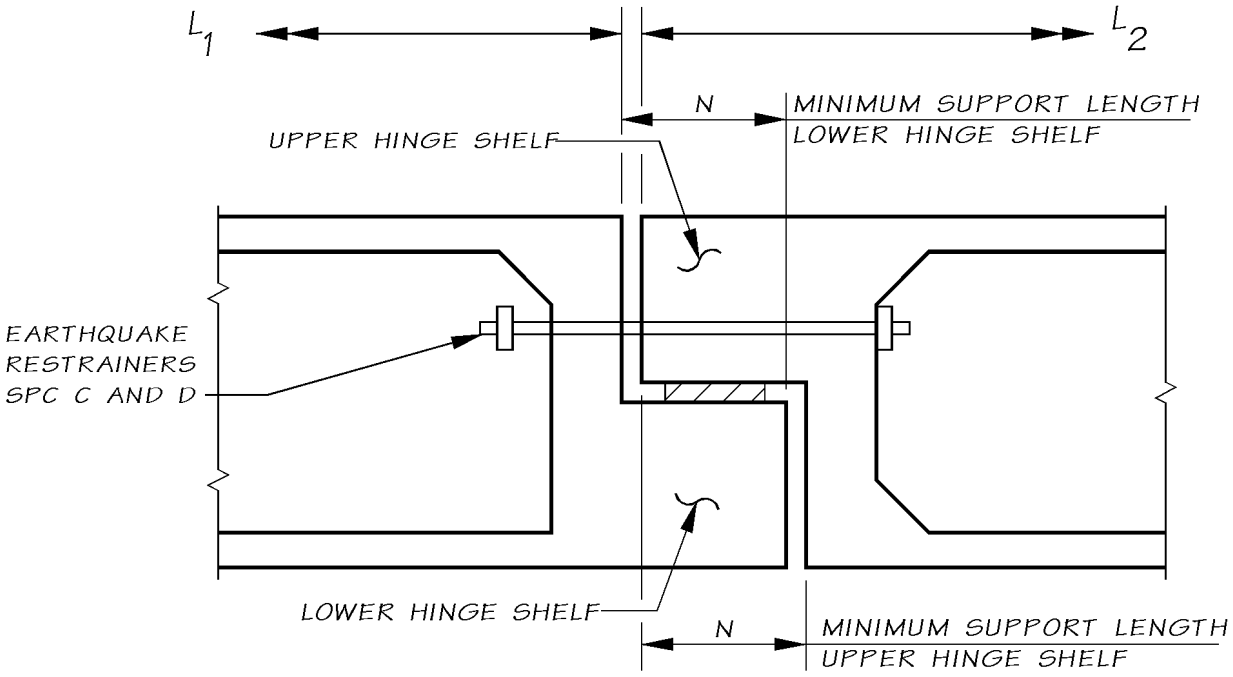

In-Span Hinge
Figure 5.4-2

5.5 Bridge Widenings

This section provides general guidance for the design of bridge widenings. Included are additions to the substructure and the superstructure of reinforced concrete box girder, flat slab, T-beam, and prestressed concrete girder bridges. For additional information, see ACI Committee Report, Guide for Widening Highway Bridges[9].

5.5.1 Review of Existing Structures

A. General

Obtain the following documents from existing records for preliminary review, design, and plan preparation:

1. The "As-Built" contract plans, usually available from the "Bridge Engineering Information System" on the Bridge and Structures Office website.
2. The original contract plans and special provisions, which can be obtained from Engineering Records (Plans Vault), Records Control or the "Bridge Engineering Information System" on the Bridge and Structures Office website.
3. Check with the Bridge Preservation Unit for records of any unusual movements/rotations and other structural information.
4. Original design calculations, which are stored in State Archives.
5. Current field measurements. Current field measurements of existing pier crossbeam locations are recommended so that new prestressed concrete girders are not fabricated too short or too long. This is particularly important if piers have been constructed with different skews.
6. Original and current Foundation Reports from the Materials Lab or from the Plans Vault.
7. Change Order files to the original bridge contract in Records Control Unit.

B. Original Contract Plans and Special Provisions

Location and size of reinforcement, member sizes and geometry, location of construction joints, details, allowable design soil pressure, and test hole data are given on the plans. Original contract plans can be more legible than the microfilm copies.

The special provisions may include pertinent information that is not covered on the plans or in the AASHTO *LRFD Specifications*.

C. Original Calculations

The original calculations should be reviewed for any "special assumptions" or office criteria used in the original design. The actual stresses in the structural members, which will be affected by the widening, should be reviewed. This may affect the structure type selected for the widening.

D. Final Records

For major widening/renovation projects, the Final Records should be reviewed particularly for information about the existing foundations and piles. Sometimes the piles indicated on the original plans were omitted, revised, or required preboring. Final Records are available from Records Control or Bridge Records (Final Records on some older bridges may be in storage at the Materials Lab).

5.5.2 Analysis and Design Criteria

A. General

Each widening represents a unique situation and construction operations may vary between widening projects. The guidelines in this section are based on years of WSDOT design experience with bridge widenings.

1. Appearance

The widening of a structure should be accomplished in such a manner that the existing structure does not look "added on to." When this is not possible, consideration should be given to enclosure walls, cover panels, paint, or other aesthetic treatments. Where possible and appropriate, the structure's appearance should be improved by the widening.

2. Materials

Preferably, materials used in the construction of the widening shall have the same thermal and elastic properties as the materials in the original structure.

3. Load Distribution and Construction Sequence

The members of the widening should be proportioned to provide similar longitudinal and transverse load distribution characteristics as the existing structure. Normally this can be achieved by using the same cross sections and member lengths that were used in the existing structure.

The construction sequence and degree of interaction between the widening and the existing structure, after completion, shall be fully considered in determining the distribution of the dead load for design of the widening and stress checks for the existing structure.

A suggested construction sequence or stage construction shall be clearly shown in the plans to avoid confusion and misinterpretation during construction. A typical construction sequence may involve placing the deck concrete, removing the falsework, placing the concrete for the closure strip, and placing the concrete for the traffic barrier.

4. Specifications

The design of the widening shall conform to the current AASHTO *LRFD Bridge Design Specifications* and the *Standard Specifications*.

5. Geometrical Constraints

The overall appearance and geometrical dimensions of the superstructure and columns of the widening should be the same or as close as possible to those of the existing structure. This is to ensure that the widening will have the same appearance and similar structural stiffness as the original structure.

6. Overlay

It should be established at the preliminary plan stage if an overlay is required as part of the widening.

7. Strength of the Existing Structure

A review of the strength of the main members of the existing structure shall be made for construction conditions utilizing AASHTO *LRFD Specifications*.

A check of the existing main members after attachment of the widening shall be made for the final design loading condition.

If the existing structural elements do not have adequate strength, consult your Design Unit Manager or in the case of consultants, contact the Consultant Liaison Engineer for appropriate guidance.

If significant demolition is required on the existing bridge, consideration should be given to requesting concrete strength testing for the existing bridge and including this information in the contract documents.

8. Special Considerations

i. For structures that were originally designed for HS-20 loading, HL-93 shall be used to design the widening. For structures that were originally designed for less than HS-20, consideration should be given to replacing the structure instead of widening it.

ii. Longitudinal joints are not permitted in order to eliminate potentially hazardous vehicle control problems.

iii. The *Standard Specifications* do not permit falsework to be supported from the existing structure unless the Plans and Specifications state otherwise. This requirement eliminates the transmission of vibration from the existing structure to the widening during construction. The existing structure may still be in service.

iv. For narrow widenings where the Plans and Specifications require that the falsework be supported from the original structure (e.g., there are no additional girders, columns, crossbeams, or closure strips), there shall be no external rigid supports such as posts or falsework from the ground. Supports from the ground do not permit the widening to deflect with the existing structure when traffic is on the existing structure. This causes the uncured concrete of the widening to crack where it joins the existing structure. Differential dead load deflection during construction shall be given consideration.

v. Precast members may be used to widen existing CIP structures. This method is useful when the horizontal or vertical clearances during construction are insufficient to build CIP members.

vi. The alignment for diaphragms for the widening shall generally coincide with the existing diaphragms.

vii. When using battered piles, estimate the pile tip elevations and ensure that they will have ample clearance from all existing piles, utilities, or other obstructions. Also check that there is sufficient clearance between the existing structure and the pile driving equipment.

B. Seismic Design Criteria for Bridge Widenings

Seismic design of bridge widenings shall be in accordance with Section 4.3.

C. Substructure

1. Selection of Foundation

a. The type of foundation to be used to support the widening shall generally be the same as that of the existing structure unless otherwise recommended by the Geotechnical Engineer. The effects of possible differential settlement between the new and the existing foundations shall be considered.

b. Consider present bridge site conditions when determining new foundation locations. The conditions include: overhead clearance for pile driving equipment, horizontal clearance requirements, working room, pile batters, channel changes, utility locations, existing embankments, and other similar conditions.

2. Scour and Drift

Added piles and columns for widenings at water crossings may alter stream flow characteristics at the bridge site. This may result in pier scouring to a greater depth than experienced with the existing configuration. Added substructure elements may also increase the possibility of trapping drift. The Hydraulics Engineer shall be consulted concerning potential problems related to scour and drift on all widenings at water crossings.

D. Superstructure

1. Camber

Accurate prediction of dead load deflection is more important for widenings than for new bridges, since it is essential that the deck grades match.

To obtain a smooth transition in transverse direction of the bridge deck, the camber of the girder adjacent to the existing structure shall be adjusted for the difference in camber between new and existing structure. A linear interpolation may be used to adjust the camber of the girders located away from the existing structure. The multipliers for estimating camber of new structure may be taken as shown in Table 5.3.5-1.

2. Closure Strip

Except for narrow deck slab widenings a closure strip is required for all widenings. The width shall be the minimum required to accommodate the necessary reinforcement and for form removal. Reinforcement which extends through the closure strip shall be investigated. Shear shall be transferred across the closure strip by shear friction and/or shear keys.

All falsework supporting the widening shall be released and formwork supporting the closure strip shall be supported from the existing and newly widened structures prior to placing concrete in the closure strip. Because of deck slab cracking experienced in widened concrete decks, closure strips are required unless the mid-span dead load camber is ½″ or less.

In prestressed concrete girder bridge widenings, the closure shall extend through the intermediate and end diaphragms. The diaphragms shall be made continuous with existing diaphragms.

3. Stress Levels and Deflections in Existing Structures

Caution is necessary in determining the cumulative stress levels, deflections, and the need for shoring in existing structural members during rehabilitation projects.

The designer shall investigate the adequacy of the existing structure adjacent to the widening for any additional loads, taking into account the loss of removed components.

For example, a T-beam bridge was originally constructed on falsework and the falsework was released after the deck slab concrete gained strength. As part of a major rehabilitation project, the bridge was closed to traffic and the entire deck slab was removed and replaced without shoring. Without the deck slab, the stems behave as rectangular sections with a reduced depth and width. The existing stem reinforcement was not originally designed to support the weight of the deck slab without shoring. After the new deck slab was placed, wide cracks from the bottom of the stem opened, indicating that the reinforcement was overstressed. This overstress resulted in a lower load rating for the newly rehabilitated bridge. This example shows the need to shore up the remaining T-beam stems prior to placing the new deck slab so that excessive deflections do not occur and overstress in the existing reinforcing steel is prevented.

It is necessary to understand how the original structure was constructed, how the rehabilitated structure is to be constructed, and the cumulative stress levels and deflections in the structure from the time of original construction through rehabilitation.

E. Stability of Widening

For relatively narrow box girder and T-beam widenings, symmetry about the vertical axis should be maintained because lateral loads are critical during construction. When symmetry is not possible, use pile cap connections, lateral connections, or special falsework. A minimum of two webs is generally recommended for box girder widenings. For T-beam widenings that require only one additional web, the web should be centered at the axis of symmetry of the deck slab. Often the width of the closure strip can be adjusted to accomplish this.

5.5.3 Removing Portions of the Existing Structure

Portions of the existing structure to be removed shall be clearly indicated on the plans. Where a clean break line is required, a ¾″ deep saw cut shall be specified for a deck slab with normal wear and a ½″ deep saw cut for worn deck slabs. In no case, however, shall the saw blade cut or nick the main transverse top slab reinforcement. The special provisions shall state that care will be taken not to damage any reinforcement which is to be saved. Hydromilling is preferred where reinforcing bar cover is shallow and can effectively remove delaminated decks because of the good depth control it offers. When greater depths of slab are to be removed, special consideration should be given to securing exposed reinforcing bars to prevent undue vibration and subsequent fatigue cracks from occurring in the reinforcing bars.

The current General Special Provisions should be reviewed for other specific requirements on deck slab removal.

Removal of any portion of the main structural members should be held to a minimum. Careful consideration shall be given to the construction conditions, particularly when the removal affects the existing frame system. In extreme situations, preloading by jacking is acceptable to control stresses and deflections during the various stages of removal and construction. Removal of the main longitudinal deck slab reinforcement should be kept to a minimum. See "Slab Removal Detail" Figure 5.5.4-1 for the limiting case for the maximum allowable removal.

The plans shall include a note that critical dimensions and elevations are to be verified in the field prior to the fabrication of precast units or expansion joint assemblies.

In cases where an existing sidewalk is to be removed but the supporting slab under the sidewalk is to be retained, Region personnel should check the feasibility of removing the sidewalk. Prior to design, Region personnel should make recommendations on acceptable removal methods and required construction equipment. The plans and specifications shall then be prepared to accommodate these recommendations. This will ensure the constructibility of plan details and the adequacy of the specifications.

5.5.4 Attachment of Widening to Existing Structure

A. General

1. Lap and Mechanical Splices

To attach a widening to an existing structure, the first choice is to utilize existing reinforcing bars by splicing new bars to existing. Lap splices or mechanical splices should be used. However, it may not always be possible to splice to existing reinforcing bars and spacing limitations may make it difficult to use mechanical splices.

2. Welding Reinforcement

Existing reinforcing steel may not be readily weldable. Mechanical splices should be used wherever possible. If welding is the only feasible means, the chemistry of the reinforcing steel must be analyzed and acceptable welding procedures developed.

3. Drilling Into Existing Structure

It may be necessary to drill holes and set dowels in epoxy resin in order to attach the widening to the existing structure.

When drilling into heavily reinforced areas, chipping should be specified to expose the main reinforcing bars. If it is necessary to drill through reinforcing bars or if the holes are within 4 inches of an existing concrete edge, core drilling shall be specified. Core drilled holes shall be roughened before resin is applied. If this is not done, a dried residue, which acts as a bond breaker and reduces the load capacity of the dowel, will remain. Generally, the drilled holes are ⅛″ in diameter larger than the dowel diameter for #5 and smaller dowels and ¼″ in diameter larger than the dowel diameter for #6 and larger dowels.

In special applications requiring drilled holes greater than 1½″ diameter or deeper than 2′, core drilling shall be specified. These holes shall also be intentionally roughened prior to applying epoxy resin.

Core drilled holes shall have a minimum clearance of 3″ from the edge of the concrete and 1″ clearance from existing reinforcing bars in the existing structure. These clearances shall be noted in the plans.

4. Dowelling Reinforcing Bars Into the Existing Structure

a. Dowel bars shall be set with an approved epoxy resin. The existing structural element shall be checked for its adequacy to transmit the load transferred to it from the dowel bars.

b. Dowel spacing and edge distance affect the allowable tensile dowel loads. Allowable tensile loads, dowel bar embedment, and drilled hole sizes for reinforcing bars (Grade 60) used as dowels and set with an approved epoxy resin are shown in Table 5.5.4-1. These values are based on an edge clearance greater than 3″, a dowel spacing greater than 6″, and are shown for both uncoated and epoxy coated dowels. Table 5.5.4-2 lists dowel embedment lengths when the dowel spacing is less than 6″. Note that in Table 5.5.4-2 the edge clearance is equal to or greater than 3″, because this is the minimum edge clearance for a drilled hole from a concrete edge.

If it is not possible to obtain these embedments, such as for traffic railing dowels into existing deck slabs, the allowable load on the dowel shall be reduced by the ratio of the actual embedment divided by the required embedment.

c. The embedments shown in Table 5.5.4-1 and Table 5.5.4-2 are based on dowels embedded in concrete with f'_c=4,000 psi.

Bar Size	Allowable Design Tensile Load, T* (kips)	Drill Hole Size (in)	Required Embedment, L_e	
			Uncoated (in)	Epoxy Coated (in)
#4	12.0	⅝	7	8
#5	18.6	¾	8	9
#6	26.4	1	9	10
#7	36.0	1⅛	11	12
#8	47.4	1¼	13	14.5
#9	60.0	1⅜	16	17½
#10	73.6	1½	20	22
#11	89.0	1⅝	25	28

* Allowable Tensile Load (Strength Design) = $(f_y)(A_s)$.

Allowable Tensile Load for Dowels Set With Epoxy Resin f'_c = 4,000 psi, Grade 60 Reinforcing Bars, Edge Clearance ≥ 3″, and Spacing ≥ 6″
Table 5.5.4-1

Bar Size	Allowable Design Tensile Load, T* (kips)	Drill Hole Size (in)	Required Embedment, L_e	
			Uncoated (in)	Epoxy Coated (in)
#4	12.0	⅝	9½	10½
#5	18.6	¾	10½	11½
#6	26.4	1	11½	12½
#7	36.0	1⅛	13½	15
#8	47.4	1¼	16½	18
#9	60.0	1⅜	20	22
#10	73.6	1½	24	27
#11	89.0	1⅝	30	33

*Allowable Tensile Load (Strength Design) = $(f_y)(A_s)$.

Allowable Tensile Load for Dowels Set With Epoxy Resin, f'_c=4,000 psi, Grade 60 Reinforcing Bars, Edge Clearance ≥ 3″, and Spacing < 6″
Table 5.5.4-2

5. Shear Transfer Across a Dowelled Joint

Shear shall be carried across the joint by shear friction. The existing concrete surface shall be intentionally roughened. Both the concrete and dowels shall be considered effective in transmitting the shear force. Chipping shear keys in the existing concrete can also be used to transfer shear across a dowelled joint, but is expensive.

6. Preparation of Existing Surfaces for Concreting

See "Removing Portions of Existing Concrete" in the General Special Provisions and *Standard Specifications* Section 6-02.3(12) for requirements. Unsound, damaged, dirty, porous, or otherwise undesirable old concrete shall be removed, and the remaining concrete surface shall be clean, free of laitance, and intentionally roughened to ensure proper bond between the old and new concrete surfaces.

7. Control of Shrinkage and Deflection on Connecting Reinforcement

Dowels that are fixed in the existing structure may be subject to shear as a result of longitudinal shrinkage and vertical deflection when the falsework is removed. These shear forces may result in a reduced tensile capacity of the connection. When connecting the transverse reinforcing bars across the closure strip is unavoidable, the interaction between shear and tension in the dowel or reinforcing bar shall be checked. The use of wire rope or sleeved reinforcement may be acceptable, subject to approval by your Design Unit Manager.

Where possible, transverse reinforcing bars shall be spliced to the existing reinforcing bars in a blocked-out area which can be included in the closure strip. Nominal, shear friction, temperature and shrinkage, and distribution reinforcing bars shall be bent into the closure strip.

Rock bolts may be used to transfer connection loads deep into the existing structure, subject to the approval of your Design Unit Manager.

8. Post-tensioning

Post-tensioning of existing crossbeams may be utilized to increase the moment capacity and to eliminate the need for additional substructure. Generally, an existing crossbeam can be core drilled for post-tensioning if it is less than 30′ long. The amount of drift in the holes alignment may be approximately 1″ in 20′. For crossbeams longer than 30′, external post-tensioning should be considered.

For an example of this application, refer to Contract 3846, Bellevue Transit Access – Stage 1.

B. Connection Details

The details on the following sheets are samples of details which have been used for widening bridges. They are informational and are not intended to restrict the designer's judgment.

1. Box Girder Bridges

Figures 5.5.4-1 through 5.5.4-6 show typical details for widening box girder bridges.

Welding or mechanical butt splice are preferred over dowelling for the main reinforcement in crossbeams and columns when it can be done in the horizontal or flat position. It shall be allowed only when the bars to be welded are free from restraint at one end during the welding process.

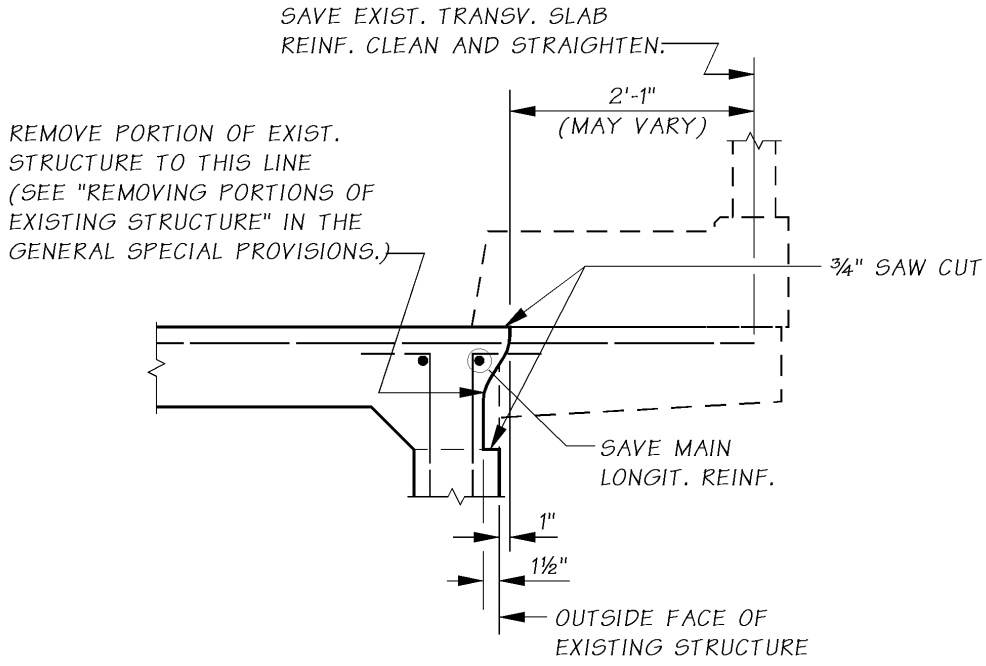

Deck Slab Removal Detail
Figure 5.5.4-1

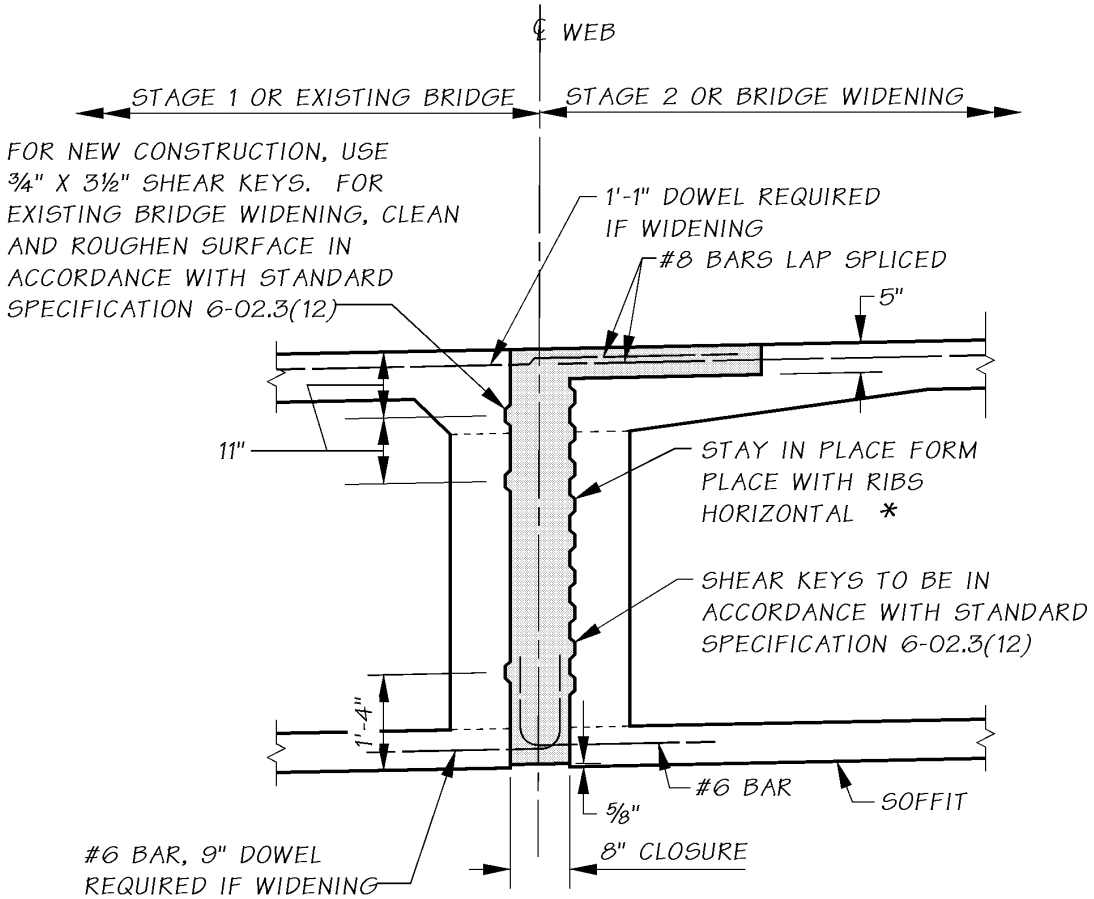

STAY IN PLACE FORM DETAIL
FOR BOX GIRDER STAGED CONSTRUCTION
OR WIDENING

* STAY IN PLACE FORMS SHALL BE SOLID GALVANIZED SHEET METAL. FORMS MUST BE VERTICALLY BRACED AS NECCESSARY TO PREVENT BOWING DURING CONCRETE PLACEMENT. TIMBER BRACING MUST BE REMOVED. IF STEEL WALES OR TIES ARE USED, THEY MAY BE LEFT IN PLACE. THE CONTRACTOR SHALL SUBMIT DESIGN CALCULATIONS IN ACCORDANCE WITH STANDARD SPECIFICATIONS 6-02.3(16) AND 6-02.3(17).

Box Girder Section in Span
Figure 5.5.4-2

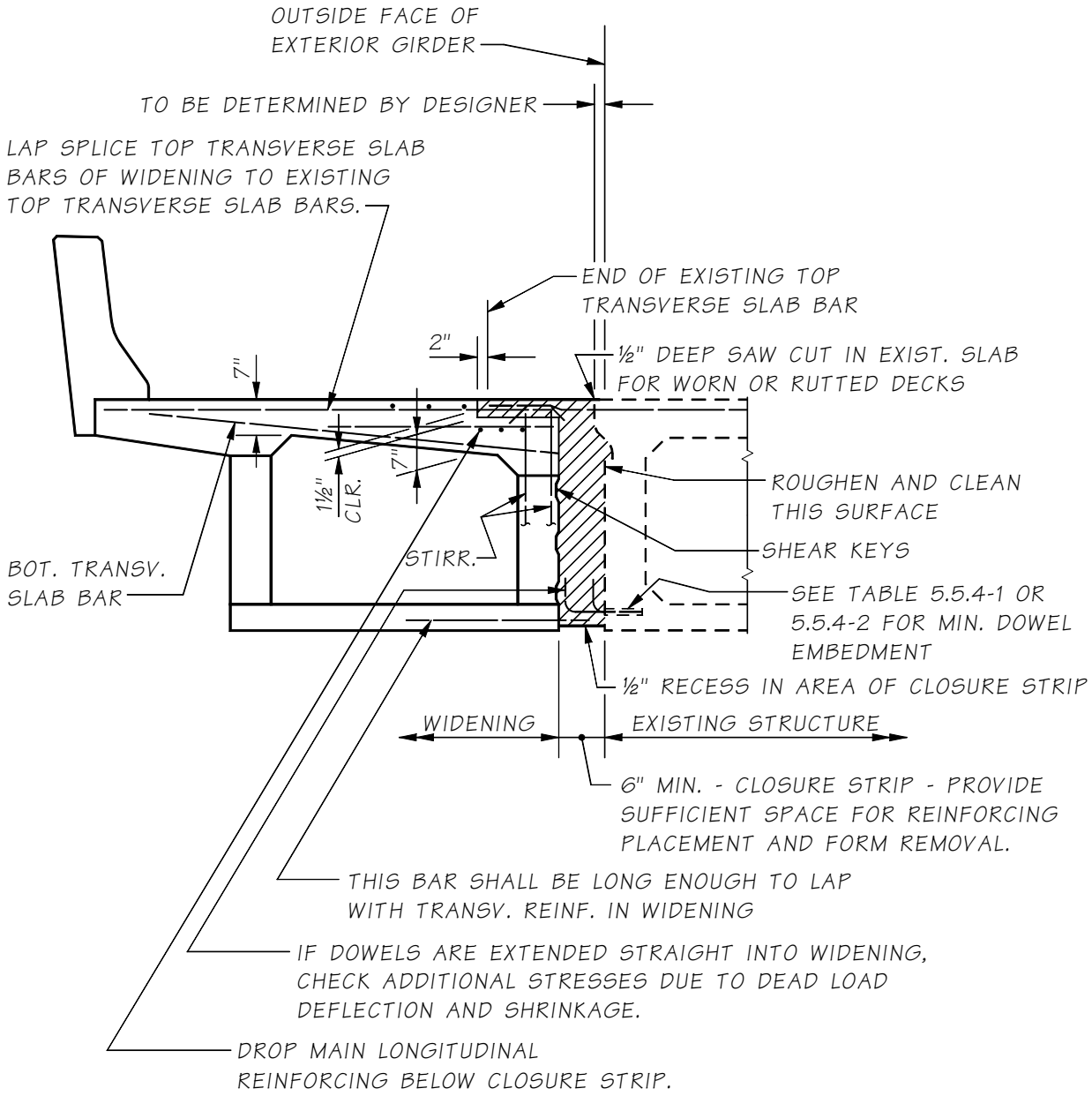

Box Girder Section Through Crossbeam
Figure 5.5.4-3

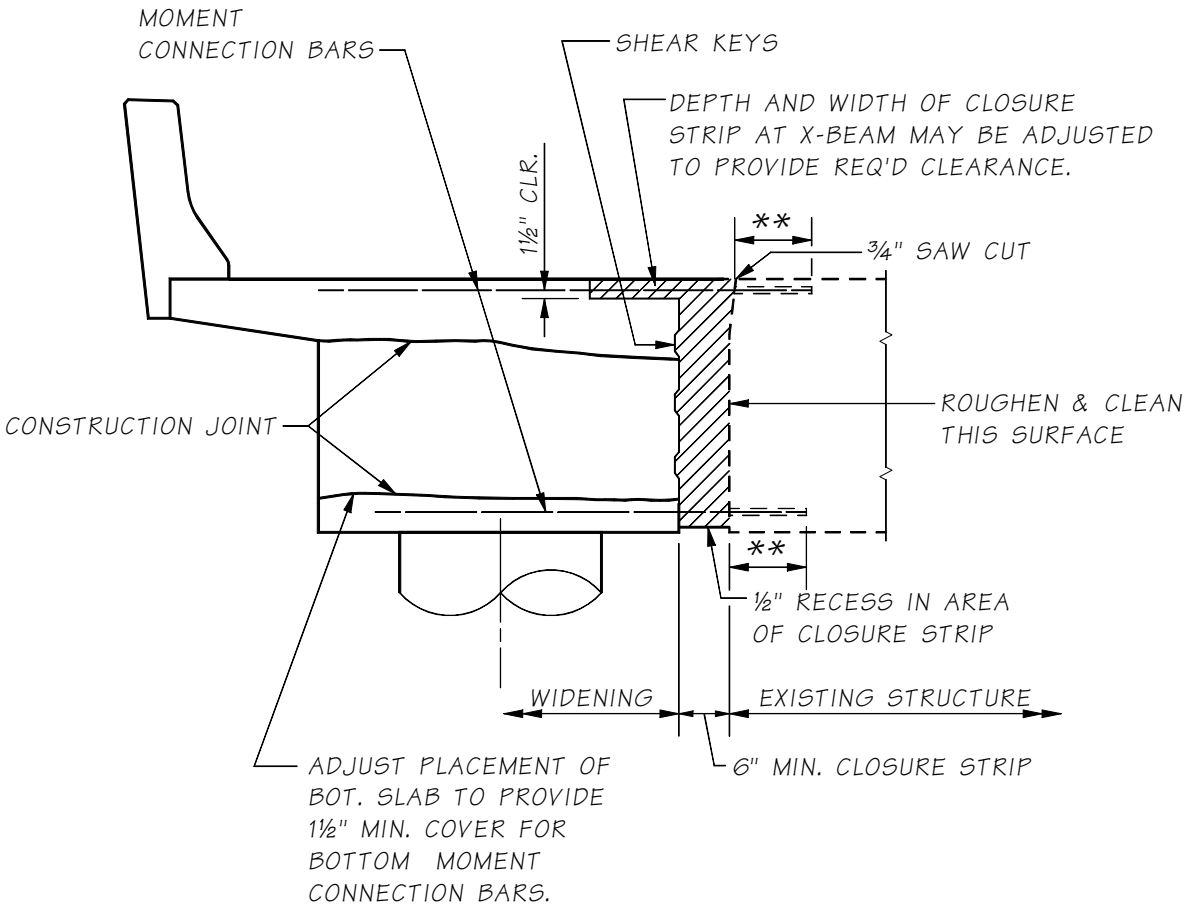

SEE "BOX GIRDER - SECTION IN SPAN" FOR ADDITIONAL DETAILS.

** SEE TABLE 5.5.4-1 OR 5.5.4-2
FOR MINIMUM DOWEL EMBEDMENT

Box Girder Section in Span at Diaphragm Alternate I
Figure 5.5.4-4

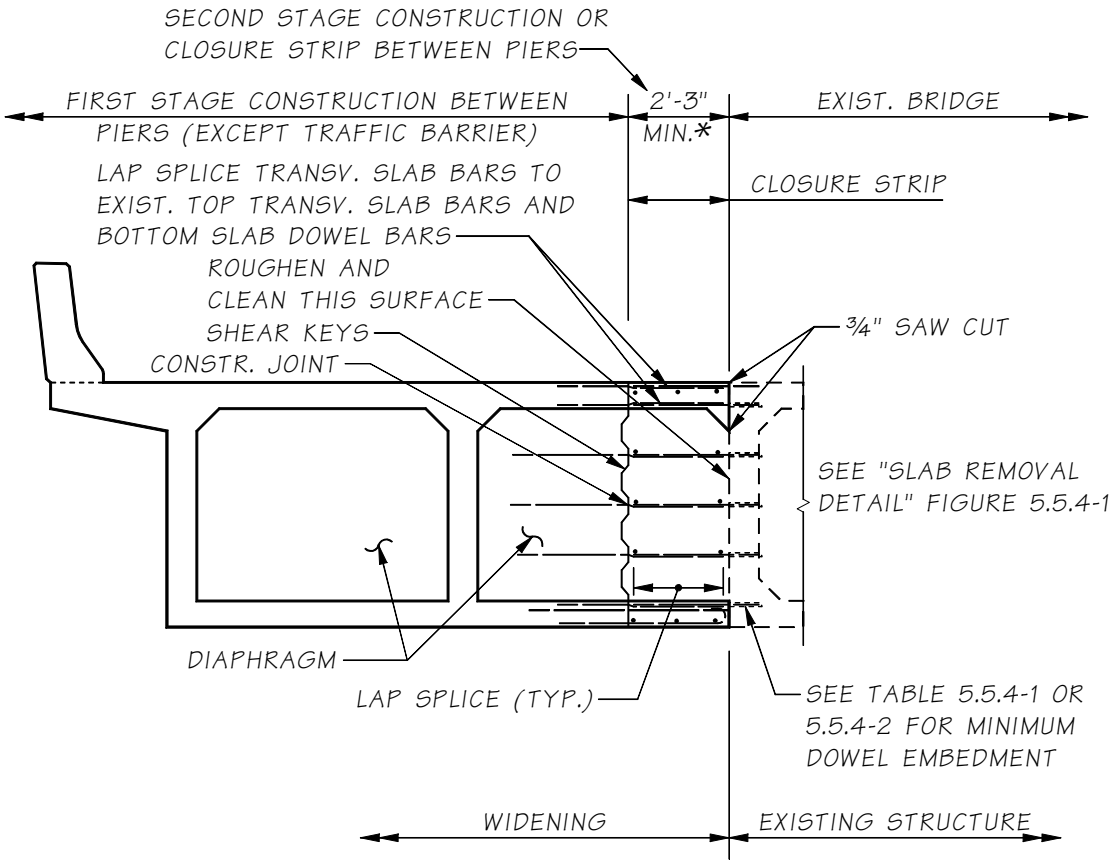

* IF LAP SPLICE EXCEEDS 2'-0", INCREASE WIDTH OF CLOSURE STRIP TO ACCOMMODATE INCREASED LAP SPLICE.

Box Girder Section in Span at Diaphragm Alternate II
Figure 5.5.4-5

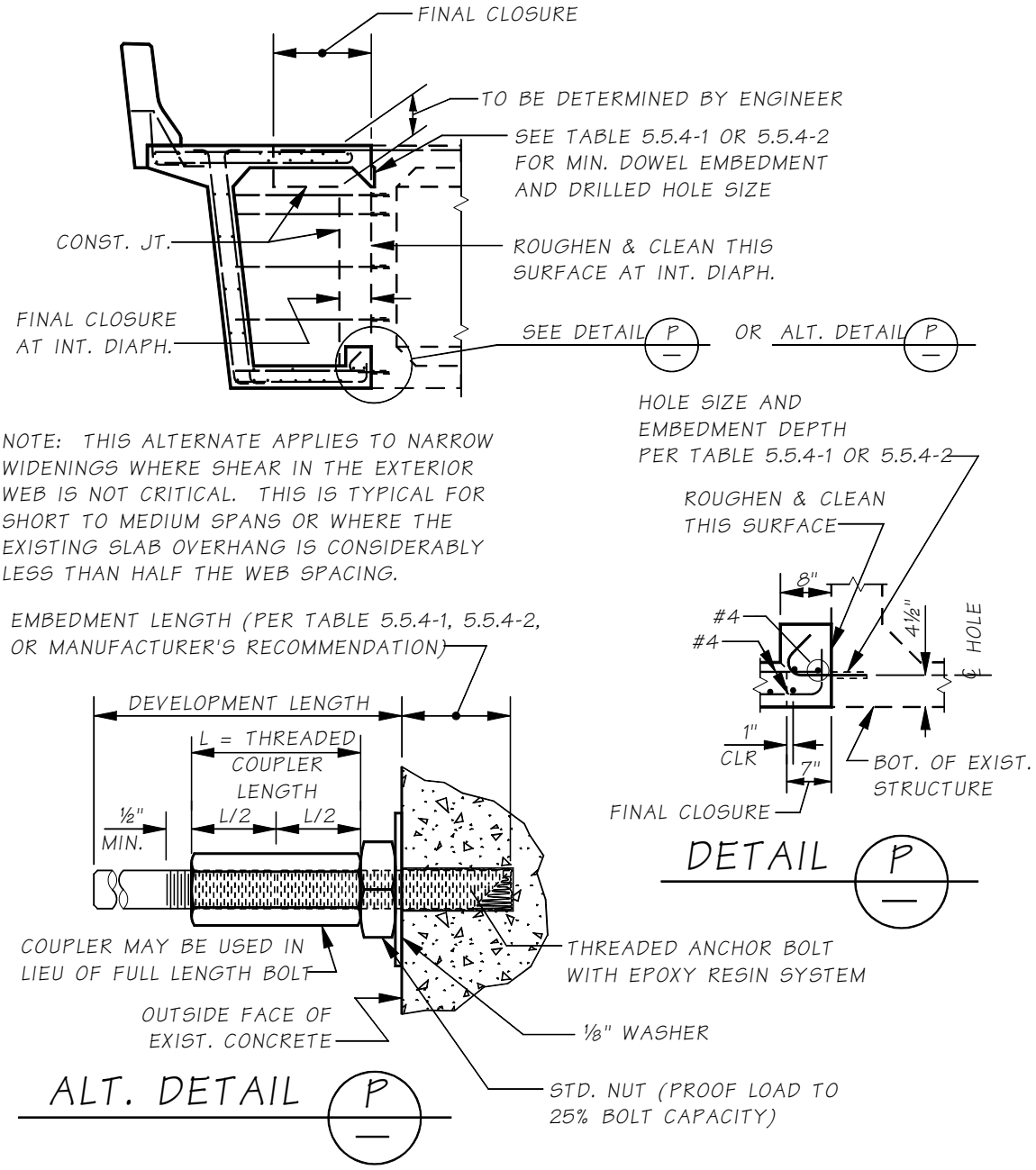

Narrow Box Girder Widening Details
Figure 5.5.4-6

2. Flat Slab Bridges

It is not necessary to remove any portion of the existing slab to expose the existing transverse reinforcing bars for splicing purposes, because the transverse slab reinforcement is only distribution reinforcement. The transverse slab reinforcement for the widening may be dowelled directly into the existing structure without meeting the normal splice requirements.

For the moment connection details, see Figure 5.5.4-7.

Note: Falsework shall be maintained under pier crossbeams until closure pour is made and cured for 10 days.

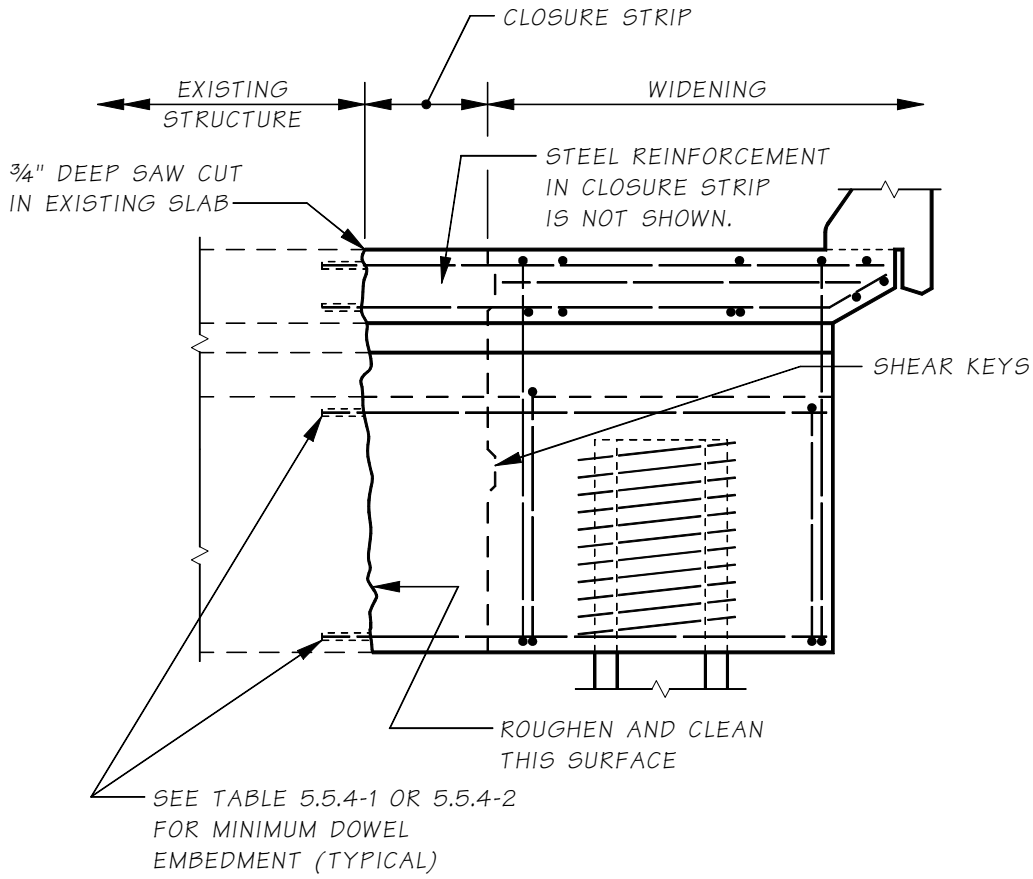

Flat Slab–Section Through Crossbeam
Figure 5.5.4-7

3. T-Beam Bridges

Use details similar to those for box girder bridges for crossbeam connections. See Figure 5.5.4-8 for slab connection detail.

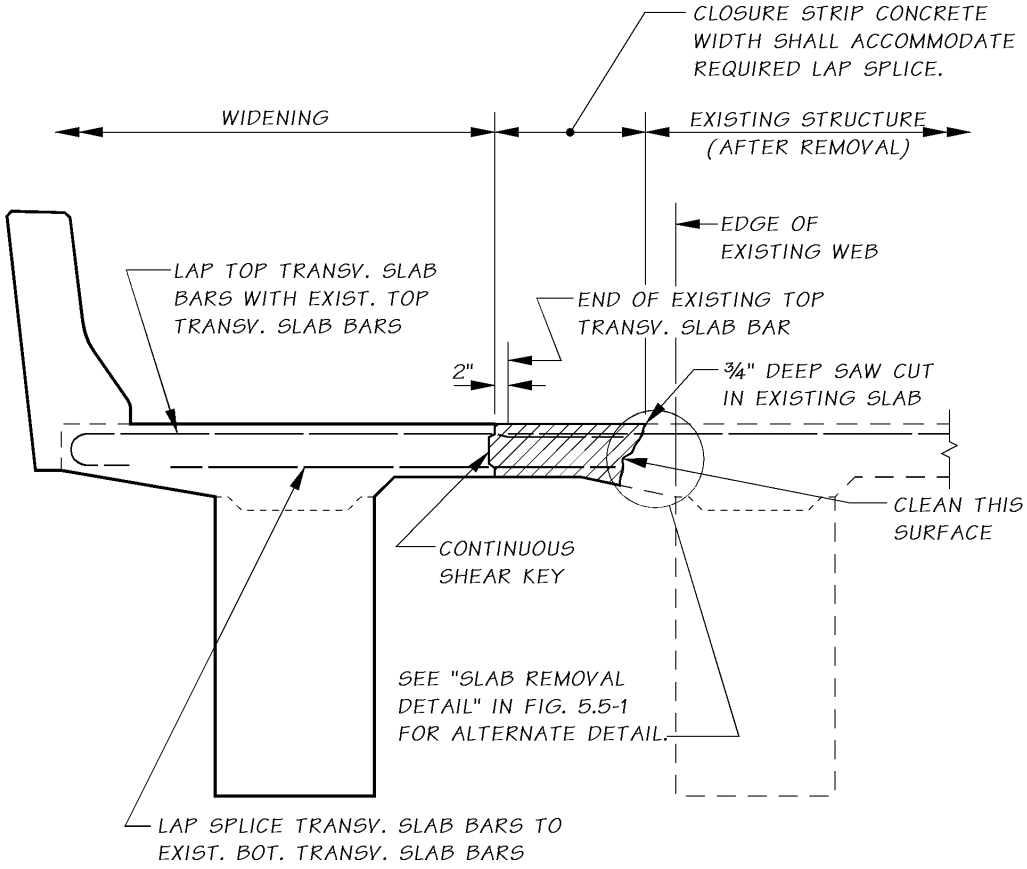

T-Beam–Section in Span
Figure 5.5.4-8

4. Prestressed Concrete Girder Bridges

Use details similar to those for box girder bridges for crossbeam moment connections and use details similar to those in Figure 5.5.4-9 for the slab connection detail.

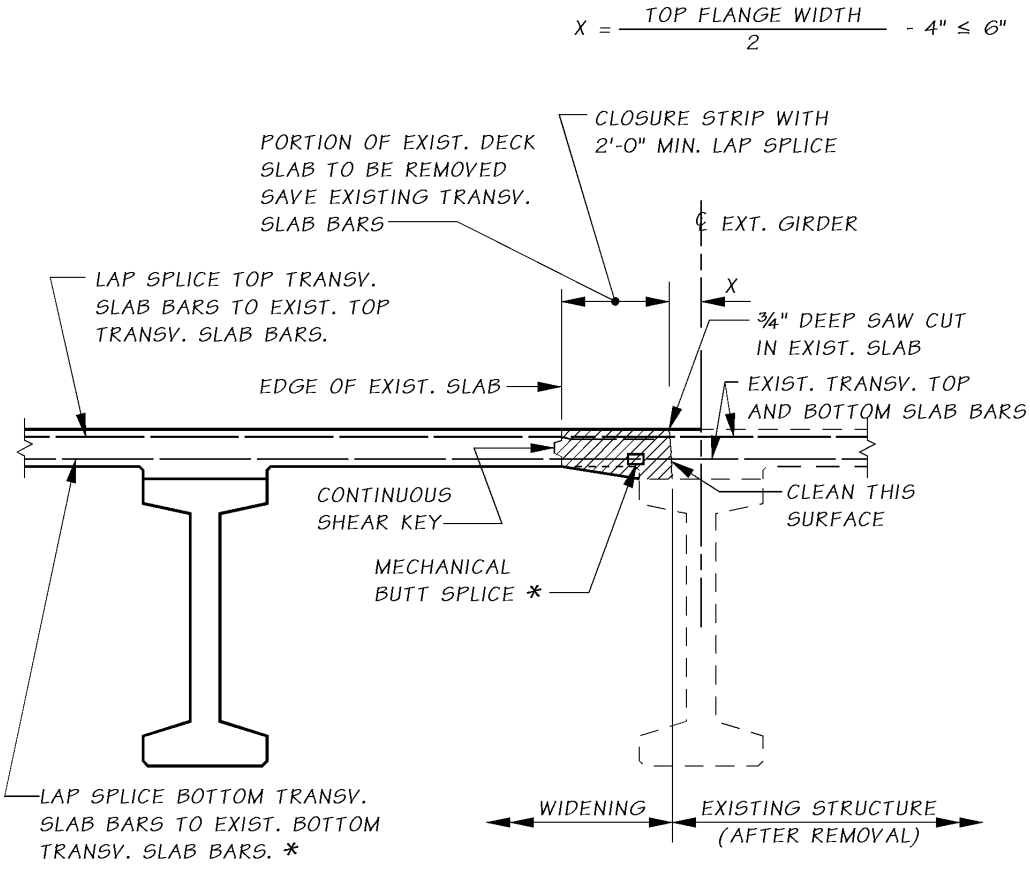

Prestressed Concrete Girder–Section in Span
Figure 5.5.4-9

5.5.5 Expansion Joints

The designer should determine if existing expansion joints can be eliminated. It will be necessary to determine what modifications to the structure are required to provide an adequate functional system when existing joints are eliminated.

For expansion joint design, see Section 9.1 Expansion Joints. Very often on widening projects it is necessary to chip out the existing concrete deck and rebuild the joint. Figures 5.5.5-1 and 5.5.5-2 show details for rebuilding joint openings for compression seal expansion joints.

If a widening project includes an overlay, the expansion joint may have to be raised, modified or replaced. See the Joint Specialist for plan details that are currently being used to modify or retrofit existing expansion joints.

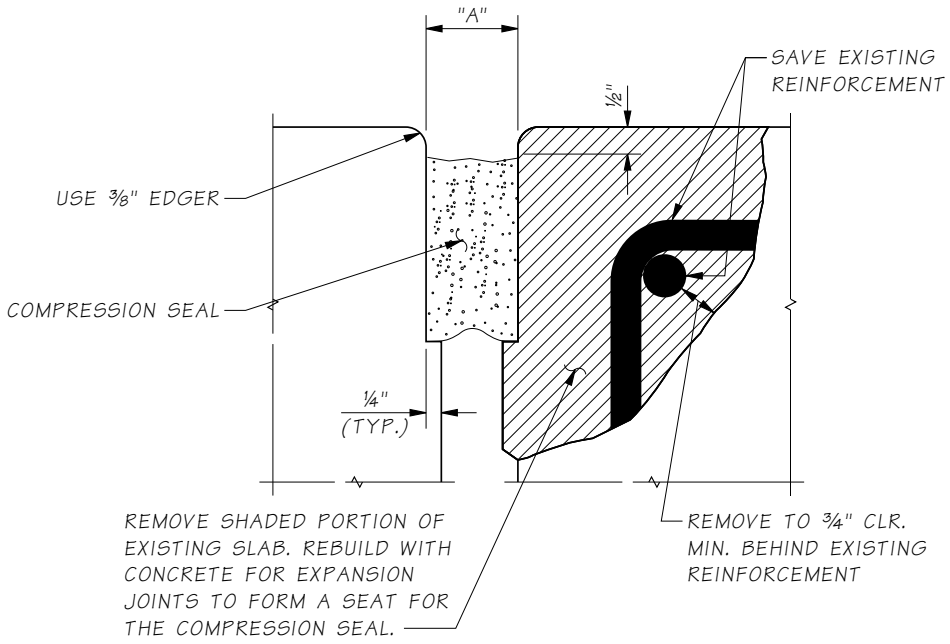

Expansion Joint Detail Shown for Compression Seal With Existing Reinforcing Steel Saved
Figure 5.5.5-1

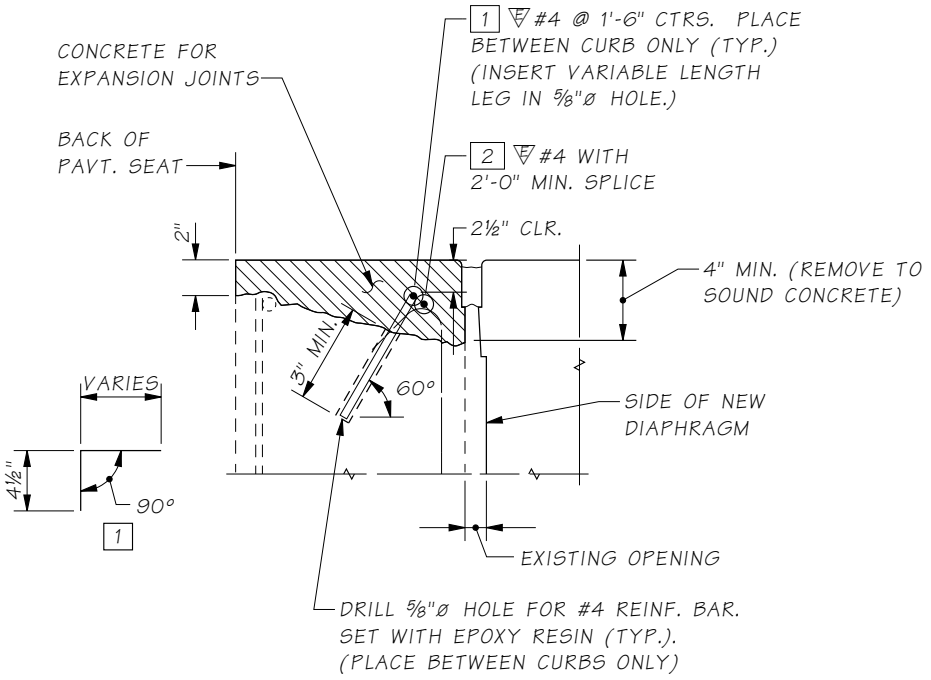

Expansion Joint Detail Shown for Compression Seal With New Reinforcing Steel Added
Figure 5.5.5-2

5.5.6 Possible Future Widening for Current Designs

For current projects that include sidewalks, provide a smooth rather than a roughened construction joint between the sidewalk and the slab.

5.5.7 Bridge Widening Falsework

For widenings which do not have additional girders, columns, crossbeams, or closure pours, falsework should be supported by the existing bridge. There should be no external support from the ground. The reason is that the ground support will not allow the widening to deflect the existing bridge when traffic is on the bridge. This will cause the "green" concrete to crack where it joins the existing bridge. The designer should contact the Bridge Construction Support Unit regarding falsework associated with widenings.

5.5.8 Existing Bridge Widenings

Appendix 5-B3 lists bridge widenings projects that may be used as design aids for the designers. These should not be construed as the only acceptable methods of widening; there is no substitute for the designer's creativity or ingenuity in solving the challenges posed by bridge widenings.

5.6 Prestressed Concrete Girder Superstructures

The prestressed concrete girder bridge is an economical and rapid type of bridge construction and often preferred for WSDOT bridges.

Precast sections are generally fabricated in plant or somewhere near the construction site and then erected. Precasting permits better material quality control and is often more economical than CIP concrete.

Pre-tensioning is accomplished by stressing strands to a predetermined tension and then placing concrete around the strands, while the stress is maintained. After the concrete has hardened, the strands are released and the concrete, which has become bonded to the tendon, is prestressed as a result of the strands attempting to relax to their original length. The strand stress is maintained during placing and curing of the concrete by anchoring the ends of strands to abutments that may be as much as 500′ apart. The abutments and appurtenances used in the prestressing procedure are referred to as a pre-tensioning bed or bench.

5.6.1 WSDOT Standard Prestressed Concrete Girder Types

A girder type consists of a series of girder cross sections sharing a common shape. The numbers within girder series generally refer to the depth of the section in inches. Refer to *Standard Specifications* Section 6-02.3(25) for a comprehensive list of Standard WSDOT girder types. Standard WSDOT girder types include:

Prestressed Concrete I Girders – Washington State Standard I Girders were adopted in the mid-1950s. The original series was graduated in 10 foot increments from 30 feet to 100 feet. In 1990, revisions were made incorporating the results of the research done at Washington State University on girders without end blocks. The revisions included three major changes: a thicker web; end blocks were eliminated; and strand spacing was increased. The current Series of this type include W42G, W50G, W58G, and W74G.

Prestressed Concrete Wide Flange (WF) I Girders and Spliced Prestressed Concrete Girders – In 1999, deeper girders, commonly called "Supergirders" were added to the WSDOT standard concrete girders. These new supergirders may be pre-tensioned or post-tensioned. The pre-tensioned Series are designated as WF74G, WF83G and WF95G and the post-tensioned (spliced) Series are designated as WF74PTG, WF83PTG and WF95PTG.

In 2004 Series WF42G, WF50G, and WF58G were added to the prestressed concrete girder standards. In 2008, Series WF66G, WF100G, and WF100PTG were added to the prestressed concrete girder standards. In 2009, Series WF36G was added to the prestressed concrete girder standards.

Prestressed Concrete Wide Flange Deck Girders – In 2015, the top flanges of Wide Flange I Girders were widened and thickened to support traffic loads without a CIP concrete deck. The top flanges are mechanically connected at the flange edges to adjacent girders. This Series includes the WF39DG through the WF103DG.

Prestressed Concrete Wide Flange Thin Deck Girders – In 2015, the top flanges of wide flange I girders were widened to create a girder which would support a CIP concrete deck placement without formwork. This Series includes the WF36TDG through the WF100TDG.

Deck Bulb Tee Girders – This type of girder has a top flange designed to support traffic loads and are mechanically connected at the flange edges to adjacent girders. They include Series W35DG, W41DG, W53DG and W65DG.

Prestressed Concrete Slab Girders – Prestressed concrete slab girders are available in heights ranging from 12 inches to 30 inches.

Prestressed Concrete Tub Girders – In 2004 prestressed concrete tub girders were added as standard girders.

All WSDOT prestressed concrete girders are high performance high strength concrete girders. They generally rely on high strength concrete to be effective for the spans expected as a single piece. The approximate ranges of maximum span lengths are as shown in Table 5.6.1-1 and Appendices 5.6-A1-1 to 5.6-A1-9.

Standard drawings for WSDOT prestressed concrete girders are shown in the Bridge Standard Drawings website (www.wsdot.wa.gov/Bridge/Structures/StandardDrawings.htm).

Type	Depth (in)	Area (in^2)	Iz (in^4)	Yb (in)	Wt (k/ft)	Volume to Surface Ratio (in)	Max. Span Capability (ft)	Max. Length (252 kips Limit) (ft)
W42G	42.00	373.25	76092	18.94	0.428	2.77	85	-
W50G	50.00	525.5	164958	22.81	0.602	3.12	115	-
W58G	58.00	603.5	264609	28.00	0.692	3.11	130	-
W74G	73.50	746.7	546110	38.08	0.856	2.90	150	-
WF36G	36.00	690.8	124772	17.54	0.792	3.24	105	-
WF42G	42.00	727.5	183642	20.36	0.834	3.23	120	-
WF50G	50.00	776.5	282559	24.15	0.890	3.22	140	-
WF58G	58.00	825.5	406266	27.97	0.946	3.21	155	-
WF66G	66.00	874.5	556339	31.80	1.002	3.20	165	-
WF74G	74.00	923.5	734356	35.66	1.058	3.19	175	-
WF83G	82.63	976.4	959393	39.83	1.119	3.19	190	-
WF95G	94.50	1049.1	1328995	45.60	1.202	3.18	190	-
WF100G	100.00	1082.8	1524912	48.27	1.241	3.17	205	203
12″ Slab	12.00	566.0	6772	6.01	0.649	4.82	30	-
18″ Slab	18.00	658.6	21922	9.01	0.755	3.84	45	-
24” Slab	24.00	745.8	48331	12.02	0.855	3.91	60	-
26″ Slab	26.00	840.3	63080	13.02	0.963	4.32	65	-
30″ Slab	30.00	1027.6	104791	15.01	1.177	4.72	75	-
U54G4	54.00	1038.8	292423	20.97	1.190	3.51	130	-
U54G5	54.00	1110.8	314382	19.81	1.273	3.47	130	-
U66G4	66.00	1208.5	516677	26.45	1.385	3.51	150	-
U66G5	66.00	1280.5	554262	25.13	1.467	3.47	150	-
U78G4	78.00	1378.2	827453	32.06	1.579	3.51	170	160
U78G5	78.00	1450.2	885451	30.62	1.662	3.48	170	152
UF60G4	60.00	1207.7	483298	26.03	1.384	3.48	150	-
UF60G5	60.00	1279.7	519561	24.74	1.466	3.45	150	-
UF72G4	72.00	1377.4	787605	31.69	1.578	3.48	160	160
UF72G5	72.00	1449.4	844135	30.26	1.661	3.45	170	152
UF84G4	84.00	1547.1	1190828	37.42	1.773	3.48	180	142
UF84G5	84.00	1619.1	1272553	35.89	1.855	3.46	180	136

Section Properties of WSDOT Standard Prestressed Concrete Girders
Table 5.6.1-1

5.6.2 Design Criteria

WSDOT design criteria for prestressed concrete girder superstructures are given in Table 5.6.2-1.

AASHTO LRFD Section 5.12.3.3 "Bridges Composed of Simple Span Precast Girders Made Continuous" allows for some degree of continuity for loads applied on the bridge after the continuity diaphragms have been cast and cured. This assumption is based on the age of the girder when continuity is established, and degree of continuity at various limit states. Both degree of continuity and time of continuity diaphragm casting may result in contractual and design issues. Designing these types of bridges for the envelope of simple span and continuous spans for applicable permanent and transient loads is the approach used by WSDOT as it has yielded good results.

Design Specifications	AASHTO *LRFD Specifications* and WSDOT *Bridge Design Manual* M 23-50
Design Method	Prestressed concrete members shall be designed for service limit state for allowable stresses and checked for strength limit state for ultimate capacity.
Superstructure Continuity	Prestressed concrete girder superstructures shall be designed for the envelope of simple span and continuous span loadings for all permanent and transient loads. Loads applied before establishing continuity (typically before placement of continuity diaphragms) need only be applied as a simple span loading. Continuity reinforcement shall be provided at supports for loads applied after establishing continuity.
Loads and Load Factors	Service, Strength, Fatigue, and Extreme Event Limit State loads and load combinations shall be in accordance with AASHTO *LRFD Specifications*
Allowable Stresses	Table 5.2.1-1
Prestress Losses	Section 5.1.4
Shear Design	AASHTO LRFD Section 5.7 and Section 5.2.2.B
Shipping and Handling	Section 5.6.3
Continuous Structure Configuration	Girder types and spacing shall be identical in adjacent spans. Girder types and spacing may be changed at expansion joints.
Girder End Skew Angle	Girder end skew angles for prestressed concrete slabs, deck bulb-tees, WFDG girders, WFTDG girders and tubs shall be limited to 30°. Girder end skew angles for all other prestressed concrete girders shall be limited to 45°.
Intermediate Diaphragms	CIP concrete intermediate diaphragms shall be provided for all prestressed concrete girder bridges (except slabs) as shown below: • ⅕ points of span for span length > 160′-0″. • ¼ points of span for 120′-0″ < span length ≤ 160′-0″. • ⅓ points of span for 80′-0″ < span length ≤ 120′-0″. • Midpoint of span for 40′-0″ < span length ≤ 80′-0″. • No diaphragm requirement for span length ≤ 40′-0″. Intermediate diaphragms shall be either partial or full depth as described in Section 5.6.4.C.4.

Design Criteria for Prestressed Concrete Girders
Table 5.6.2-1

A. Support Conditions

The prestressed concrete girders are assumed to be supported on rigid permanent simple supports. These supports can be either bearing seats or elastomeric pads. The design span length is the distance center to center of bearings for simple spans. For continuous spans erected on falsework (raised crossbeam), the effective point of support for girder design is assumed to be the face of the crossbeam. For continuous spans on crossbeams (dropped or semi-dropped crossbeam), the design span length is usually the distance center to center of temporary bearings.

B. Composite Action

1. General

The sequence of construction and loading is extremely important in the design of prestressed concrete girders. The composite section has a much larger capacity than the basic girder section but it cannot take loads until the deck slab has obtained adequate strength. Assumptions used in computing composite section properties are shown in Figure 5.6.2-1.

2. Load Application

The following sequence and method of applying loads is typically used in girder analysis:

a. Girder dead load is applied to the girder section.

b. Diaphragm dead load is applied to the girder section.

c. Deck slab dead load is applied to the girder section.

d. Superimposed dead loads (such as barriers, sidewalks and overlays) and live loads are applied to the composite section.

The dead load of one traffic barrier or sidewalk may be divided among a maximum of three girder webs.

3. Composite Section Properties

A CIP concrete bridge deck forms the top flange of the composite girder in prestressed concrete girder bridge construction.

i. **Effective and Transformed Flange Width**

The effective flange width of a concrete bridge deck for computing composite section properties shall be in accordance with AASHTO LRFD Section 4.6.2.6. The effective flange width shall be reduced by the ratio E_{slab}/E_{girder} to obtain the transformed flange width. The effective modulus of the composite section with the transformed flange width is then E_{girder}.

ii. **Effective Flange Thickness**

The effective flange thickness of a concrete bridge deck for computing composite section properties shall be the deck thickness reduced by ½″ to account for wearing. Where a bridge will have an overlay applied prior to traffic being allowed on the bridge, the full deck thickness may be used as effective flange thickness.

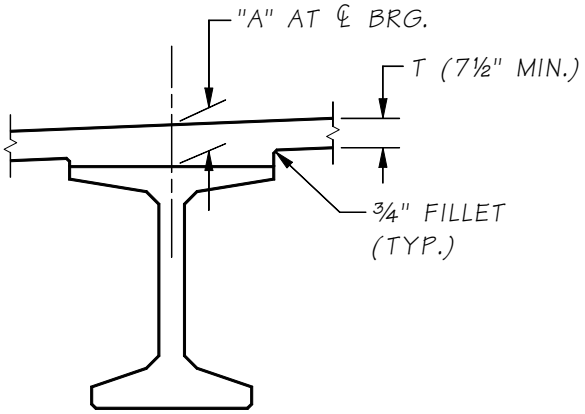

SECTION AS DETAILED

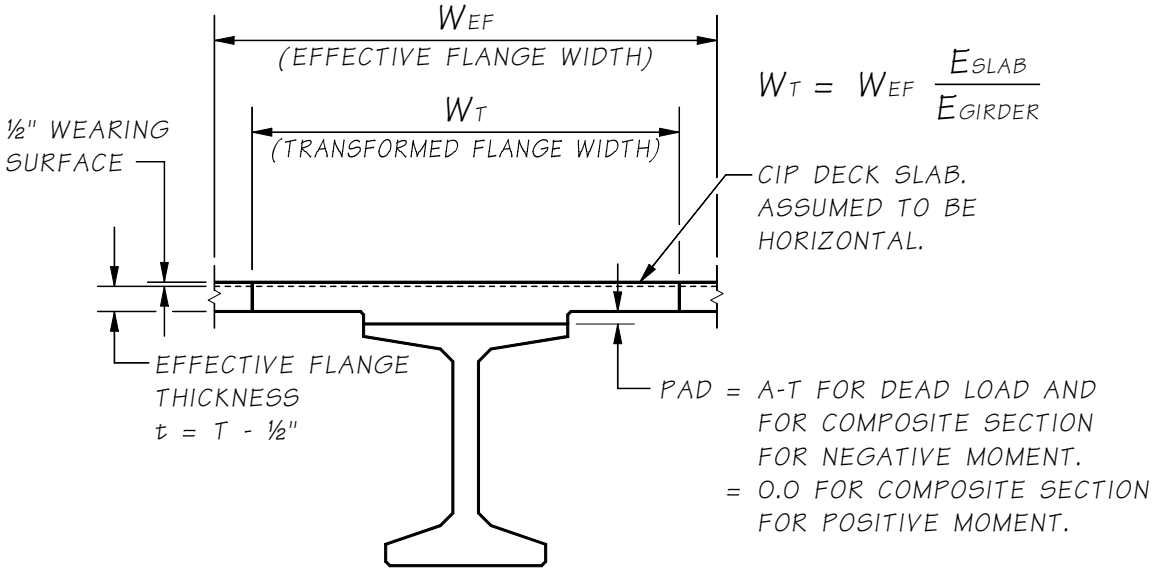

SECTION FOR COMPUTATION OF COMPOSITE SECTION PROPERTIES

Typical Section for Computation of Composite Section Properties
Figure 5.6.2-1

iii. **Flange Position**

An increased dimension from top of girder to top of bridge deck at centerline of bearing at centerline of girder shall be shown in the Plans. This is called the "A" dimension. It accounts for the effects of girder camber, vertical curve, deck cross slope, etc. See Appendix 5-B1 for method of computing.

For purposes of calculating composite section properties for negative moments, the pad/haunch height between bottom of deck and top of girder shall be taken as the "A" dimension minus the flange thickness "T" at intermediate pier supports and shall be reduced by girder camber as appropriate at other locations.

For purposes of calculating composite section properties for positive moments, the bottom of the bridge deck shall be assumed to be directly on the top of the girder. This assumption may prove to be true at center of span where excess girder camber occurs.

iv. **Section Dead Load**

The bridge deck dead load to be applied to the girder shall be based on the full bridge deck thickness. The full effective pad/haunch weight shall be added to that load over the full length of the girder. The full effective pad or haunch height is typically the "A" dimension minus the flange thickness "T", but may be higher at midspan for a crest vertical curve.

C. Design Procedure

1. General

The WSDOT Prestressed concrete girder design computer program PGSuper is the preferred method for design.

2. Stress Conditions

The stress limits as described in Table 5.2.1-1 shall not be exceeded for prestressed concrete girders at all stages of construction and in service. The stages of construction for which stress limits shall be checked shall include, but not be limited to the following:

a. Prestressing release at casting yard using Service I Limit State

b. Lifting at casting yard using Service I Limit State. Dead load impact need not be considered during lifting. This check shall be done in accordance with Section 5.6.3.C.2.

c. Shipping for a girder with impact using Service I Limit State. A dead load impact of 20 percent shall be included acting both up and down. The angle of inclination shall be the equilibrium tilt angle computed for lateral stability with a roadway superelevation of 2 percent. This check shall be done in accordance with Section 5.6.3.D.6. This condition represents the girder traveling along a straight road at a typical 2% superelevation with dynamic load effects.

d. Shipping for a girder without impact using Service I Limit State. Dead load impact, wind and centrifugal forces need not be included. The angle of inclination shall be the equilibrium tilt angle computed for lateral stability with a roadway superelevation of 6 percent. This check shall be done in accordance with Section 5.6.3.D.6. This condition represents the girder going slowly through a corner with a 6 percent superelevation.

e. Deck and diaphragm placement using Service I Limit State

f. Final condition without live load using Service I Limit State

g. Final condition with live load using Service I Limit State for compressive stresses and Service III Limit State for tensile stresses

h. Final condition with live load using Fatigue I Limit State

When dead load impact is included in construction checks, the deflection and sweep induced by the dynamic component need not be considered when performing stress and stability checks.

D. Standard Strand Locations

Standard strand locations of typical prestressed concrete girders are shown in Figure 5.6.2-2 the Bridge Standard Drawings website (www.wsdot.wa.gov/Bridge/Structures/StandardDrawings.htm).

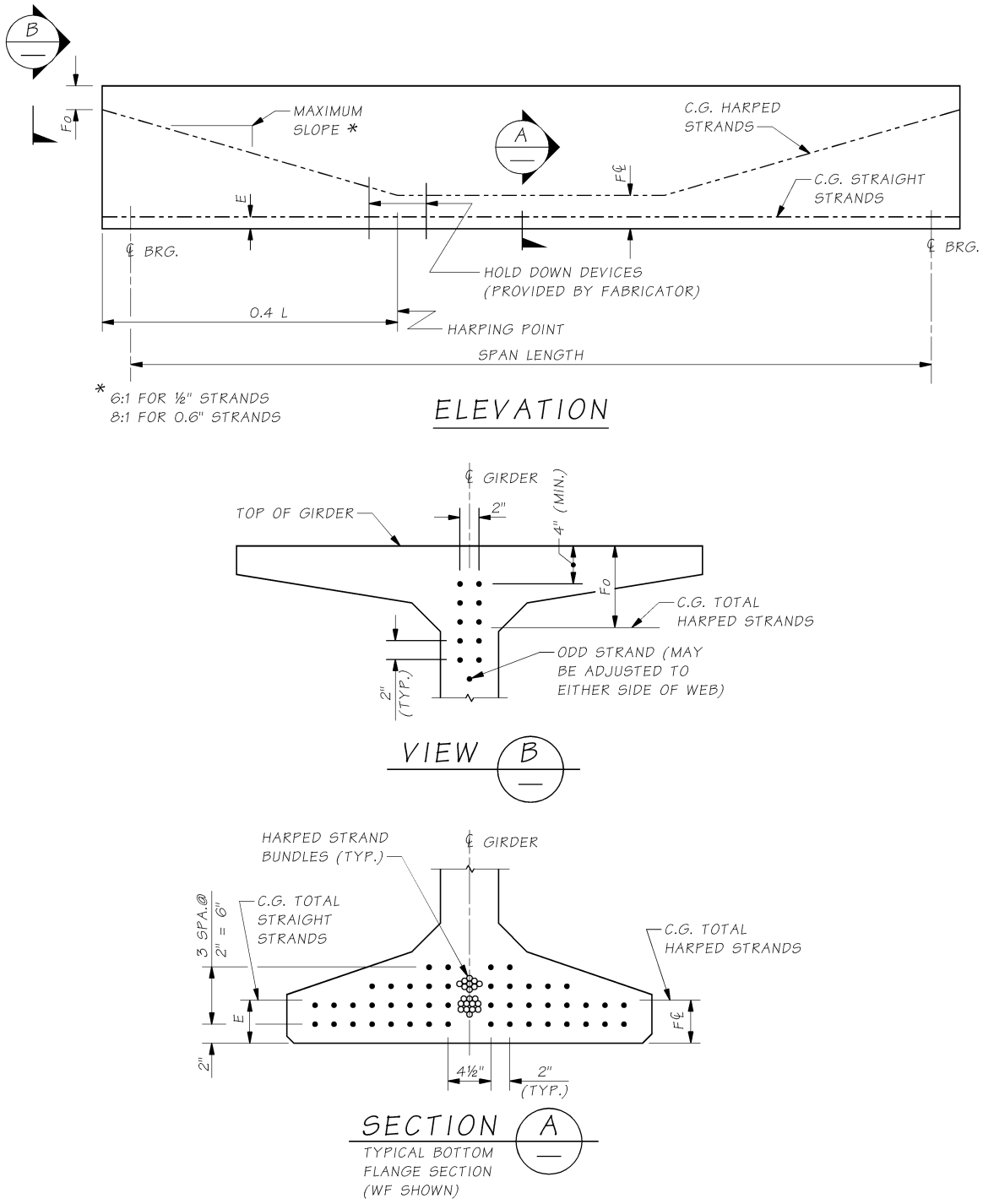

Typical Prestressed Concrete Girder Configuration
Figure 5.6.2-2

E. Girder End Types

There are four typical end types for prestressed concrete girders. Due to the extreme depth of the WF83G, WF95G, and WF100G girders, and possible end of girder tilt at the piers for profile grades, the designer will need to pay particular attention to details to assure the girders will fit and perform as intended.

The end types designs may require modification for bridge security. The space between girders at the abutment may require omission by extending the diaphragm to the face of the abutment stem. Coordinate with the WSDOT State Bridge and Structures Architect during final design where required.

The four end types are shown as follows:

1. End Type A

End Type A as shown in Figure 5.6.2-3 is for cantilever end piers with an end diaphragm cast on the end of the girders. End Type A has a recess at the bottom of the girder near the end for an elastomeric bearing pad. See Bridge Standard Drawings 5.6-A4-12 and 5.6-A9-9 for bearing pad details. The recess at the centerline of bearing is 0.5″ deep. This recess is to be used for profile grades up to and including 4 percent. The recess is to be replaced by an embedded steel plate flush with the bottom of the girder for grades over 4 percent. A tapered bearing plate, with stops at the edges to contain the elastomeric pad, can be welded or bolted to the embedded plate to provide a level bearing surface.

Reinforcing bars and pre-tensioned strands project from the end of the girder. The designer shall assure that these bars and strands fit into the end diaphragm. Embedment of the girder end into the end diaphragm shall be a minimum of 3″ and a maximum of 6″. For girder ends where the tilt would exceed 6″ of embedment, the girder ends shall be tilted to attain a plumb surface when the girder is erected to the profile grade.

The gap between the end diaphragm and the stem wall shall be a minimum of 1½″ or ½″ greater than required for longitudinal bridge movement.

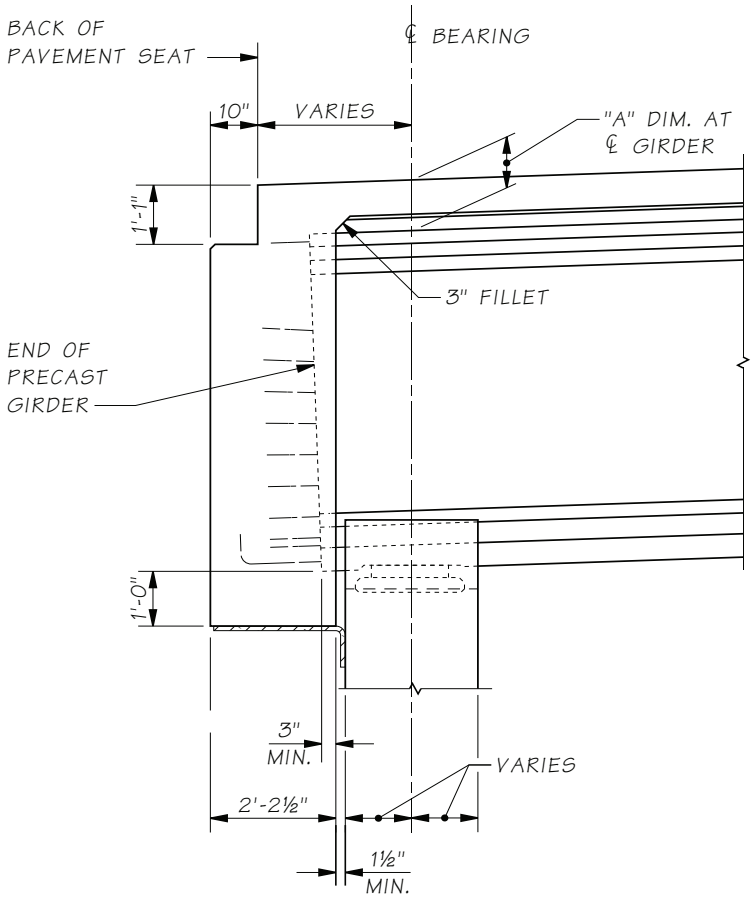

End Type A (End Diaphragm on Girder)
Figure 5.6.2-3

2. End Type B

End Type B as shown in Figure 5.6.2-4 is for "L" type abutments. End Type B also has a recess at the bottom of the girder for an elastomeric bearing pad. Notes regarding the bearing recess on End Type A also apply to End Type B. End Type B typically does not have reinforcing or strand projecting from the girder end.

The centerline of the diaphragm is normal to the roadway surface. The centerline of the bearing is coincident with the centerline of the diaphragm at the top of the elastomeric pad.

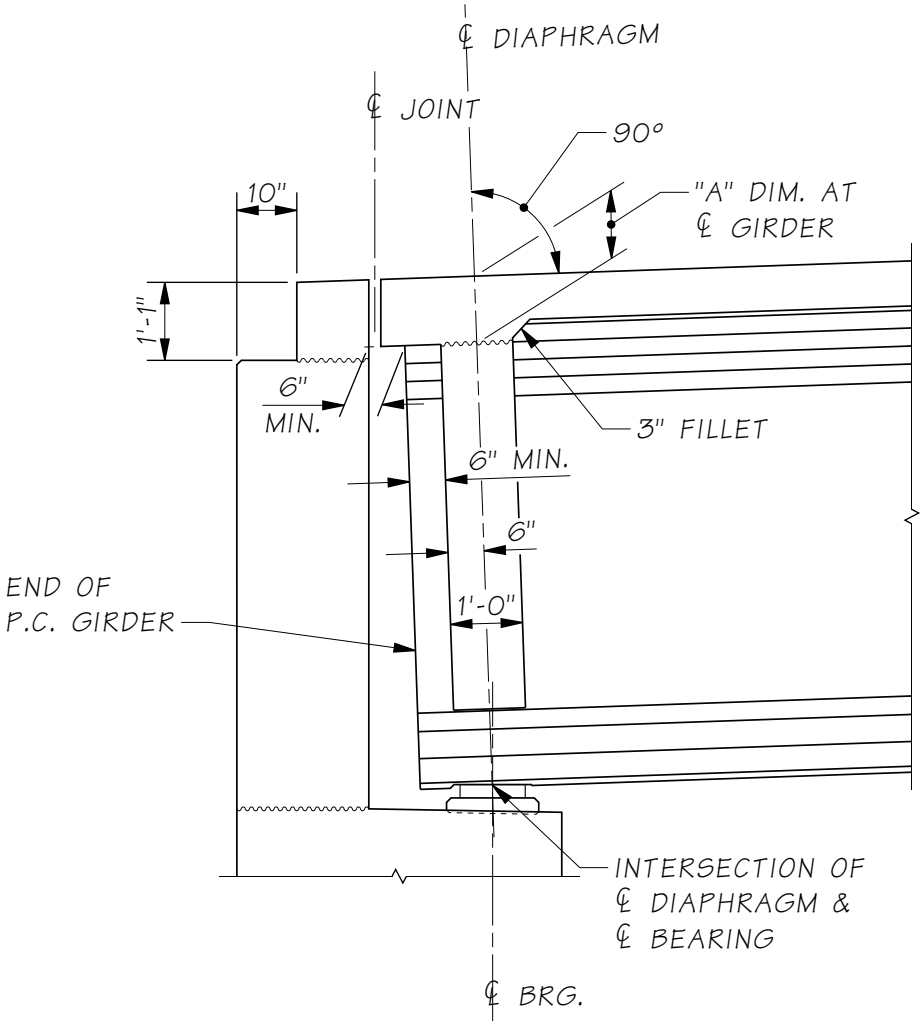

End Type B (L-Shape End Pier)
Figure 5.6.2-4

3. End Type C

End Type C as shown in Figure 5.6.2-5 is for continuous spans and an intermediate hinge diaphragm at an intermediate pier. There is no bearing recess and the girder is temporarily supported on oak blocks. This detail may be used to reduce the seismic demand at an intermediate pier by allowing rotation about the axis parallel to the crossbeam. The reduced pier stiffness will lower the plastic overstrength shear demand (V_{po}), allow for shorter columns and eliminate the plastic hinge at the top of each column. While the diaphragm hinge is intended to act as a pin, there may be some residual stiffness at the connection that shall be determined by the designer. This stiffness will move the point of inflection down the pier, inducing some plastic overstrength shear demand.

The hinge connection should be assumed pinned to determine the pier displacement and ductility demand for seismic analysis.

The designer shall check the edge distance and provide a dimension that prevents edge failure, or spalling, at the top corner of the supporting cross beam for load from the oak block including dead loads from girder, deck slab, and construction loads.

For prestressed concrete girders with intermediate hinge diaphragms, designers shall:

a. Check size and minimum embedment in crossbeam and diaphragm for hinge bars. Bars shall be sized based on interface shear due to calculated plastic overstrength shear force (V_{po}) from the column while ignoring the concrete cohesion and axial load contributions.

b. Design the width of the shear key to take the factored vertical bearing force per AASHTO LRFD Section 5.6.5 at the Strength limit state. The maximum shear key width shall be limited to 0.3d, where d is the width of the diaphragm.

c. Confinement reinforcement shall be added to the diaphragm between the girders over a vertical distance equal to or greater than the diaphragm width. Confinement shall be no less than #4 ties bars spaced at 12 inches longitudinally and staggered 6 inches vertically.

d. The throat of the hinge gap shall be no larger than 0.75 inches The bottom of diaphragm may taper up to 5 degrees maximum to allow for 1.5 times the elastic service, strength or extreme rotation. The material used to form the gap shall be strong enough to support the wet concrete condition and shall be removed after concrete placement.

e. Check interface shear friction at girder end (see Section 5.2.2.C.2).

Design of the pier in the transverse direction (parallel to the crossbeam axis) shall be performed per the AASHTO Seismic Guide Specifications.

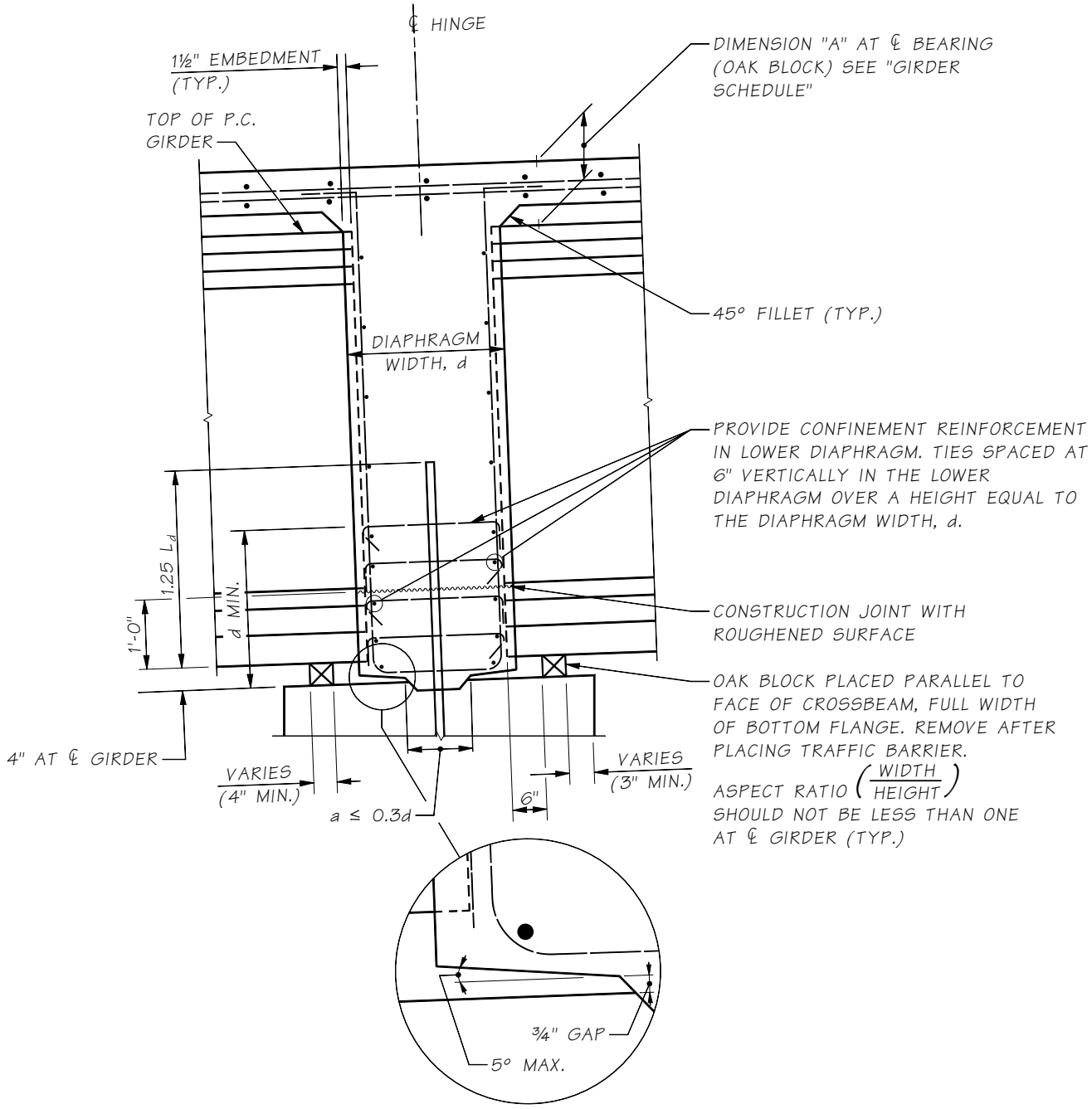

End Type C (Intermediate Hinge Diaphragm)
Figure 5.6.2-5

4. End Type D

End Type D as shown in Figure 5.6.2-6 is for continuous spans fully fixed to columns at intermediate piers. There is no bearing recess and the girder is temporarily supported on oak blocks.

The designer shall check the edge distance and provide a dimension that prevents edge failure, or spalling, at the top corner of the supporting cross beam for load from the oak block including dead loads from girder, deck slab, and construction loads. The designer shall check interface shear friction at the girder end (see Section 5.2.2.C.2).

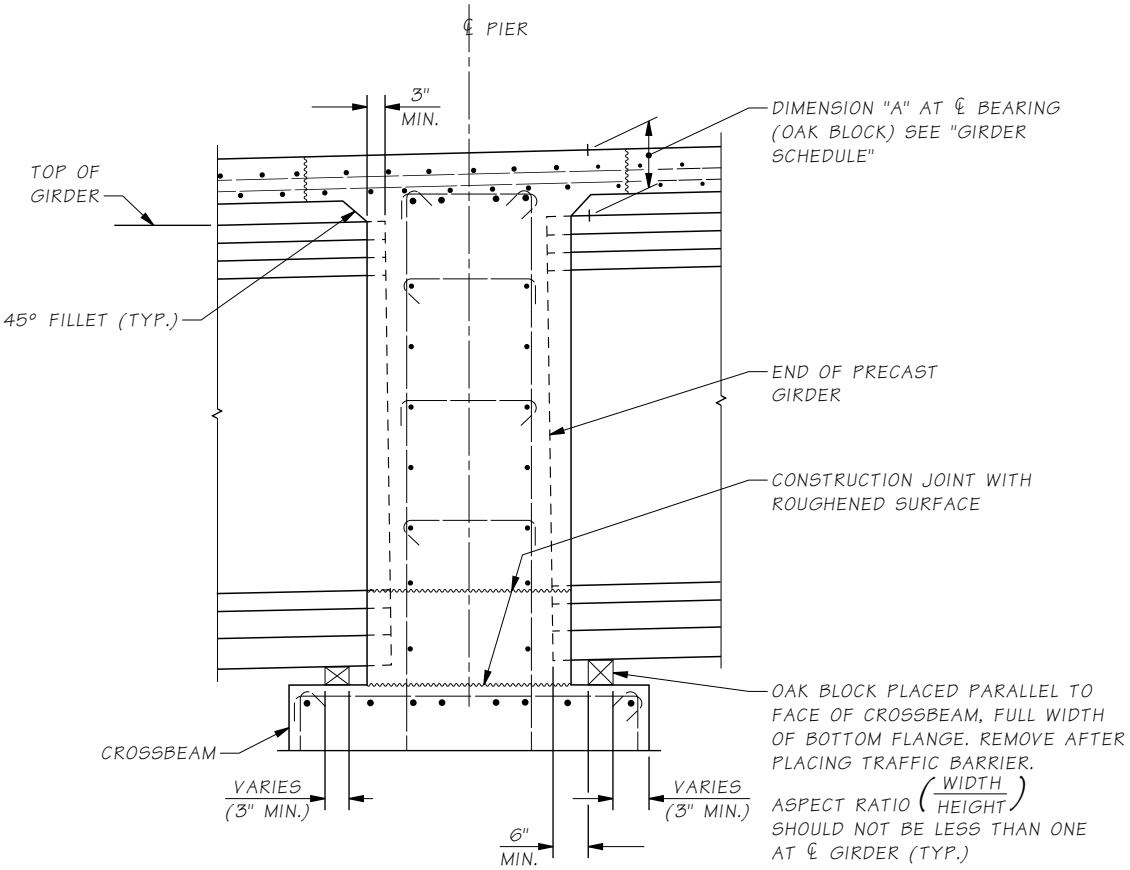

End Type D
Figure 5.6.2-6

F. Splitting Resistance in End Regions of Prestressed Concrete Girders

The splitting resistance of pre-tensioned anchorage zones shall be as described in AASHTO LRFD Section 5.9.4.4.1. For pre-tensioned I-girders or bulb tees, the end vertical reinforcement shall not be larger than #5 bars and spacing shall not be less than 2½″. The remaining splitting reinforcement not fitting within the h/4 zone may be placed beyond the h/4 zone at a spacing of 2½″.

G. Confinement Reinforcement in End Regions of Prestressed Concrete Girders

Confinement reinforcement in accordance with AASHTO LRFD Section 5.9.4.4.2 shall be provided.

H. Girder Stirrups

For girders with CIP deck slabs, girder stirrups shall be field bent over the top mat of reinforcement in the deck slab. An exception is girder stirrups for slab and wide flange thin deck girders which shall be bent at the height shown in the standard girder plans.

Girder stirrups may be prebent, but the extended hook shall be within the core of the slab (the inside edge of the hook shall terminate above the bottom mat deck slab bars).

I. Section Properties

Gross section properties (including the gross deck area transformed by the girder/deck modular ratio if applicable) shall be used for design of precast concrete girders including prestress losses, camber, and flexural capacity. Transformed sections (transforming reinforcement to an equivalent concrete area) may be used in special cases with the approval of the WSDOT Bridge Design Engineer.

5.6.3 Fabrication and Handling

A. Shop Plans

Fabricators of prestressed concrete girders are required to submit shop plans which show specific details for each girder. These shop plans are reviewed for conformance with the Contract Plans and specifications.

B. Special Problems for Fabricators

1. Strand Tensioning

The method selected for strand tensioning may affect the design of the girders. The strand arrangements shown in the office standard plans and included in the PGSuper computer program are satisfactory for tensioning methods used by fabricators in this state. Harped strands are normally tensioned by pulling them as straight strands to a partial tension. The strands are then deflected vertically as necessary to give the required harping angle and strand stress. In order to avoid overtensioning the harped strands by this procedure, the slope of the strands is limited to a maximum of 6:1 for 0.5″ ϕ strands and 8:1 for 0.6″ϕ strands. The straight strands are tensioned by straight jacking.

2. Hold Down Forces

Forces on the hold-down units are developed as the harped strands are raised. The hold-down device provided by the fabricator must be able to hold the vertical component of the harping forces. Normally a two or more hold-down unit is required. Standard commercial hold-down units have been preapproved for use with particular strand groups.

3. Numbers of Strands

Since the prestressing beds used by the girder fabricators can carry several girders in a line, it is desirable that girders have the same number of strands where practical. This allows several girders to be set up and cast at one time.

For pre-tensioned concrete girders, the number of permanent prestressing strands (straight and harped) shall be limited to 100 total 0.6″ϕ strands.

C. Handling of Prestressed Concrete Girders

1. In-Plant Handling

The maximum weight that can be handled by precasting plants in the Pacific Northwest is 252 kips. Pre-tensioning lines are normally long enough so that the weight of a girder governs capacity, rather than its length. Headroom is also not generally a concern for the deeper sections.

2. Lateral Stability During Handling

The designer shall specify the lifting embedment locations (centroid 3′ minimum from ends - see *Standard Specifications* Section 6-02.3(25)L), maximum midspan vertical deflection and the corresponding concrete strength at release that satisfies the allowable stress criteria from Section 5.2.1.C and provides an adequate factor of safety for lateral stability. The calculations shall conform to methods as described in *Standard Specifications* Section 6-02.3(25) and reference 26. Factors of safety of 1.0 against cracking and 1.5 against failure shall be used.

As a result of the assumed lifting embedment transverse placement tolerance and the girder sweep tolerance, biaxial stresses due to lateral bending occur at the girder tilt equilibrium condition. Allowable stresses shall be evaluated for the girder tilt equilibrium condition for a hanging girder as described in *Standard Specifications* Section 6-02.3(25) and reference 26.

Lateral stability can be a concern when handling long, slender girders. Lateral bending failures are sudden, catastrophic, costly, pose a serious threat to workers and surroundings, and therefore shall be considered by designers. When the girder forms are stripped from the girder, the prestressing level is higher and the concrete strength is lower than at any other point in the life of the member. Lifting embedment/support misalignment, horizontal girder sweep and other girder imperfections can cause the girder to roll when handling, causing a component of the girder weight to be resisted by the weak axis.

Lateral stability may be improved using the following methods:

a. Move the lifting embedments away from the ends. This may increase the required concrete release strength, because decreasing the distance between lifting devices increases the concrete stresses at the harp point. Stresses at the support may also govern, depending on the exit location of the harped strands.

b. Select a girder section that is relatively wide and stiff about its vertical (weak) axis.

c. Add temporary prestressing in the top flange.

d. Brace the girder.

e. Raise the roll axis of the girder with a rigid yoke.

D. Shipping Prestressed Concrete Girders

1. General

The ability to ship girders can be influenced by a large number of variables, including mode of transportation, weight, length, height, and lateral stability. The ability to ship girders is also strongly site-dependent. For large or heavy girders, routes to the site shall be investigated during the preliminary design phase. To this end, on projects using large or heavy girders, WSDOT can place an advisory in their special provisions including shipping routes, estimated permit fees, escort vehicle requirements, Washington State Patrol requirements, and permit approval time.

2. Mode of Transportation

Three modes of transportation are commonly used in the industry: truck, rail, and barge. In Washington State, an overwhelming percentage of girders are transported by truck, so discussion in subsequent sections will be confined to this mode. However, on specific projects, it may be appropriate to consider rail or barge transportation.

Standard rail cars can usually accommodate larger loads than a standard truck. Rail cars range in capacity from approximately 120 to 200 kips. However, unless the rail system runs directly from the precasting plant to the jobsite, members must be trucked for at least some of the route, and weight may be restricted by the trucking limitations.

For a project where a large number of girders are required, barge transportation is usually the most economical. Product weights and dimensions are generally not limited by barge delivery, but by the handling equipment on either end. In most cases, if a product can be made and handled in the plant, it can be shipped by barge.

3. Weight Limitations

The net weight limitation with trucking equipment currently available in Washington State is approximately 190 kips, if a reasonable delivery rate (number of pieces per day) is to be maintained. Product weights of up to 252 kips can be hauled with currently available equipment at a limited rate.

Long span prestressed concrete girders may bear increased costs due to difficulties encountered during fabrication, shipping, and erection. Generally, costs will be less if a girder can be shipped to the project site in one piece. However, providing an alternate spliced-girder design to long span one-piece pre-tensioned girders may reduce the cost through competitive bidding.

When a spliced prestressed concrete girder alternative is presented in the Plans, the substructure shall be designed and detailed for the maximum force effect case only (no alternative design for substructure).

Local carriers should be consulted on the feasibility of shipping large or heavy girders on specific projects.

4. Support Locations

The designer shall provide shipping support locations in the plans to ensure adequate girder stability. Shipping support locations shall be no closer than the girder depth to the ends of the girder at the girder centerline. The overhangs at the leading and trailing ends of the girders should be minimized and equal if possible. Generally, the leading end overhang should not exceed 15′ to avoid interference with trucking equipment. Local carriers should be consulted if a larger leading end overhang is required. Shipping support locations shall maintain the concrete stresses within allowable limits.

Length between shipping support locations may be governed by turning radii on the route to the jobsite. Potential problems can be circumvented by moving the support points closer together (away from the ends of the girder), or by selecting alternate routes. Up to 130′ between supports is typically acceptable for most projects.

5. Height Limitations

The height of a deep girder section sitting on a jeep and steerable trailer is of concern when considering overhead obstructions on the route to the jobsite. The height of the support is approximately 6′ above the roadway surface. When adding the depth of the girder, including camber, the overall height from the roadway surface to the top of concrete can rapidly approach 14′. Overhead obstructions along the route should be investigated for adequate clearance in the preliminary design phase. Obstructions without adequate clearance must be bypassed by selecting alternate routes.

Expectations are that, in some cases, overhead clearance will not accommodate the vertical stirrup projection on deeper WSDOT standard girder sections. Alternate stirrup configurations can be used to attain adequate clearance, depending on the route from the plant to the jobsite.

6. Lateral Stability During Shipping

The designer shall specify concrete strengths, shipping support locations, minimum shipping support rotational spring constants, shipping support center-to-center wheel spacing, maximum midspan vertical deflections and temporary top strand configurations in the Plans that satisfy the allowable stress criteria from Section 5.2.1.C and provide adequate factors of safety for lateral stability during shipping. The calculations shall conform to methods described in *Standard Specifications* Section 6-02.3(25) and reference 26. Factors of safety of 1.0 against cracking and 1.5 against failure and rollover shall be used. See the discussion above on lateral stability during handling of prestressed concrete girders for suggestions on improving stability.

The rotational stiffness and center-to-center wheel spacing used in design shall be taken from Table 5.6.3-1. Design the girder for transportation with the least stiff support system as possible while achieving recommended factors of safety.

Shipping Support Rotational Spring Constant, K_θ (Kip-in/radian)	Shipping Support Center-to-Center Wheel Spacing, W_{cc}
40,000	72
50,000	72
60,000	72 or 96
70,000	96
80,000	96

Shipping Support Parameters
Table 5.6.3-1

E. Erection

A variety of methods are used to erect prestressed concrete girders, depending on the weight, length, available crane capacity, and site access. Lifting girders during erection is not as critical as when they are stripped from the forms, particularly when the same lifting devices are used for both. However, if a separate set of erection devices are used, the girder shall be checked for stresses and lateral stability. In addition, once the girder is set in place, the free span between supports is usually increased. Wind can also pose a problem. Consequently, when girders are erected, they shall immediately be braced. The temporary bracing of the girders is the contractor's responsibility.

F. Construction Sequence for Multi-Span Prestressed Concrete Girder Bridges

For multi-span prestressed concrete girder bridges, the sequence and timing of the superstructure construction has a significant impact on the performance and durability of the bridge. In order to maximize the performance and durability, the "construction sequence" details shown on the Bridge Standard Drawings website (www.wsdot.wa.gov/Bridge/Structures/StandardDrawings.htm) shall be followed for all new WSDOT multi-span prestressed concrete girder bridges. Particular attention shall be paid to the timing of casting the lower portion of the pier diaphragms/crossbeams (30 days minimum after girder fabrication) and the upper portion of the diaphragms/crossbeams (10 days minimum after placement of the deck slab). The requirements apply to multi-span prestressed concrete girder bridges with monolithic and hinge diaphragms/crossbeams.

5.6.4 Superstructure Optimization

A. Girder Selection

Cost of the girders is a major portion of the cost of prestressed concrete girder bridges. Much care is therefore warranted in the selection of girders and in optimizing their position within the structure. The following general guidelines should be considered.

1. Girder Series Selection

All girders in a bridge shall be of the same series unless approved otherwise by the Bridge and Structures Engineer. If vertical clearance is no problem, a larger girder series, utilizing fewer girder lines, may be a desirable solution.

Fewer girder lines may result in extra reinforcement and concrete but less forming cost. These items must also be considered.

2. Girder Concrete Strength

Higher girder concrete strengths should be specified where that strength can be effectively used to reduce the number of girder lines, see Section 5.1.1.A.2. When the bridge consists of a large number of spans, consideration should be given to using a more exact analysis than the usual design program in an attempt to reduce the number of girder lines. This analysis shall take into account actual live load, creep, and shrinkage stresses in the girders.

3. Girder Spacing

Consideration must be given to the deck slab cantilever length to determine the most economical girder spacing. This matter is discussed in Section 5.6.4.B. The deck slab cantilever length should be made a maximum if a line of girders can be saved. It is recommended that the overhang length, from edge of slab to center line of exterior girder, be less than 40 percent of girder spacing; then the exterior girder can use the same design as that of the interior girder. The following guidance is suggested.

i. Tapered Spans

On tapered roadways, the minimum number of girder lines should be determined as if all girder spaces were to be equally flared. As many girders as possible, within the limitations of girder capacity should be placed. Deck slab thickness may have to be increased in some locations in order to accomplish this.

ii. Curved Spans

On curved roadways, normally all girders will be parallel to each other. It is critical that the exterior girders are positioned properly in this case, as described in Section 5.6.4.B.

iii. Geometrically Complex Spans

Spans which are combinations of taper and curves will require especially careful consideration in order to develop the most effective and economical girder arrangement. Where possible, girder lengths and numbers of straight and harped strands should be made the same for as many girders as possible in each span.

iv. Number of Girders in a Span

Usually all spans will have the same number of girders. Where aesthetics of the underside of the bridge is not a factor and where a girder can be saved in a short side span, consideration should be given to using unequal numbers of girders. It should be noted that this will complicate crossbeam design by introducing torsion effects and that additional reinforcement will be required in the crossbeam.

B. Bridge Deck Cantilevers

The exterior girder location is established by setting the dimension from centerline of the exterior girder to the adjacent curb line. For straight bridges this dimension will normally be no less than 2′-6″ for W42G, W50G, and W58G; 3′-0″ for W74G; and 3′-6″ for WF74G, WF83G, WF95G and WF100G. Some considerations which affect this are noted below.

1. Appearance

Normally, for best appearance, the largest bridge deck overhang which is practical should be used.

2. Economy

Fortunately, the condition tending toward best appearance is also that which will normally give maximum economy. Larger curb distances may mean that a line of girders can be eliminated, especially when combined with higher girder concrete strengths.

3. Bridge Deck Strength

It must be noted that for larger overhangs, the bridge deck section between the exterior and the first interior girder may be critical and may require thickening.

4. Drainage

Where drainage for the bridge is required, water from bridge drains is normally piped across the top of the girder and dropped inside of the exterior girder line. A large bridge deck cantilever length may severely affect this arrangement and it must be considered when determining exterior girder location.

5. Bridge Curvature

When straight prestressed concrete girders are used to support curved roadways, the curb distance must vary. Normally, the maximum bridge deck overhang at the centerline of the long span will be made approximately equal to the overhang at the piers on the inside of the curve. At the point of minimum curb distance, however, the edge of the girder top flange should be no closer than 1′-0″ from the bridge deck edge. Where curvature is extreme, other types of bridges should be considered. Straight girder bridges on highly curved alignments have a poor appearance and also tend to become structurally less efficient.

C. Diaphragm Requirements

1. General

Diaphragms used with prestressed concrete girder bridges serve multiple purposes. During the construction stage, the diaphragms help to provide girder stability for the bridge deck placement. During the life of the bridge, the diaphragms act as load distributing elements, and are particularly advantageous for distribution of large overloads. Diaphragms also improve the bridge resistance to over-height impact loads.

Diaphragms for prestressed concrete girder bridges shall be cast-in-place concrete. Standard diaphragms and diaphragm spacings are given in the office standards for prestressed concrete girder bridges. For large girder spacings or other unusual conditions, special diaphragm designs shall be performed.

Inserts may be used to accommodate the construction of intermediate diaphragms for connections between the diaphragm and the web of prestressed concrete girders. The designer shall investigate the adequacy of the insert and the connection to develop the tensile capacity of diaphragm reinforcement. The designer shall also investigate the interface shear capacity of the diaphragm-to-web connections for construction and deck placement loads.

Open holes should be provided for interior webs so reinforcement can be placed through.

2. Design

Diaphragms shall be designed as transverse beam elements carrying both dead load and live load. Wheel loads for design shall be placed in positions so as to develop maximum moments and maximum shears.

3. Geometry

Diaphragms shall normally be oriented parallel to skew (as opposed to normal to girder centerlines). This procedure has the following advantages:

a. The build-up of higher stresses at the obtuse corners of a skewed span is minimized. This build-up has often been ignored in design.

b. Skewed diaphragms are connected at points of approximately equal girder deflections and thus tend to distribute load to the girders in a manner that more closely meets design assumptions.

c. The diaphragms have more capacity as tension ties and compression struts are continuous. Relatively weak inserts are only required at the exterior girder.

On curved bridges, diaphragms shall normally be placed on radial lines.

4. Full or Partial Depth Intermediate Diaphragms

Full depth intermediate diaphragms as shown in the office standard plans shall be used for all deck bulb tee and wide flange deck girder superstructures.

Based on research done by Washington State University (WSU) on damage by over-height loads[24], the use of intermediate diaphragms for I-shaped prestressed concrete girder bridges with CIP concrete bridge decks (including WF, wide flange thin deck, etc.) shall be as follows:

a. Full depth intermediate diaphragms as shown in the office standard plans shall be used for bridges crossing over roads of ADT > 50000.

b. Either full depth or partial depth intermediate diaphragms as shown in the office standard plans may be used for all bridges not included in item 1.

The use of full or partial depth intermediate diaphragms in bridge widenings shall be considered on a case-by-case basis depending on the width of the widening and number of added girders.

5. Tub Girder Intermediate Diaphragms

Intermediate diaphragms shall be provided both inside and between prestressed concrete tub girders.

The diaphragms inside the tub may be cast in the field or at the fabrication plant. The bottom of the diaphragm inside the tub shall be at least 3 inches above the top of the bottom flange.

The diaphragms between the tubs shall be cast in the field. For diaphragms between the tubs, the roughened surface or shear keys on the sloped web faces may not be effective in resisting interface shear. All diaphragm and construction loads on the diaphragm before the deck cures and gains strength will then be resisted by the reinforcement or inserts alone.

D. Skew Effects

Skew in prestressed concrete girder bridges affects structural behavior and member analysis and complicates construction.

1. Analysis

Normally, the effect of skew on girder analysis is ignored. It is assumed that skew has little structural effect on normal spans and normal skews. For short, wide spans and for extreme skews (values over 30°), the effect of the skew on structural action shall be investigated. All trapezoidal tub, slab, wide flange deck, wide flange thin deck and deck bulb-tee girders have a skew restriction of 30°.

Skews at ends of prestressed concrete girders cause prestressing strand force transfer to be unbalanced about the girder centerline at girder ends. In some cases, this has caused bottom flange cracking. Recent projects where this cracking occurred are Contract 8128 (Bridge Number 522/142N has W74G girders with 55 degree skew and 8 bottom flange straight strands) and Contract 8670 (Bridge Number 5/456E has WF100G girders with 56 degree skew and 40 bottom flange straight strands). Details shown in Figure 5.6.4-1 could be used to minimize bottom flange cracking for girders with large skews.

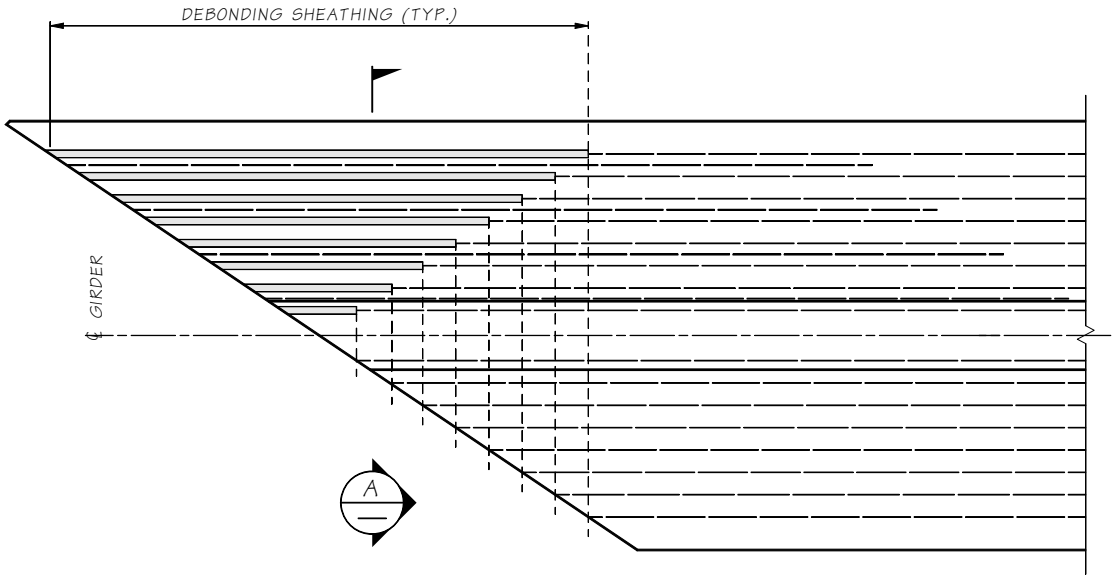

BOTTOM FLANGE DEBONDED STRANDS

ALTERNATE GIRDER END DEBOND AND REINFORCEMENT
ABOUT GIRDER ℄ FOR OPPOSITE END

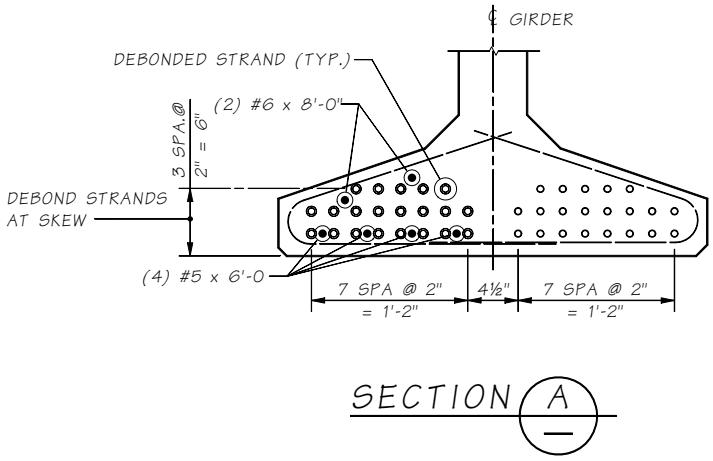

SECTION A

Skewed Girder End Details to Prevent Cracking
Figure 5.6.4-1

2. Detailing

To minimize labor costs and to avoid stress problems in prestressed concrete girder construction, the ends of girders for continuous spans shall normally be made skewed. Skewed ends of prestressed concrete girders shall always match the piers they rest on at either end.

E. Grade and Cross Slope Effects

Large cross slopes require an increased amount of the girder pad dimension ('A' dimension) necessary to ensure that the structure can be built. This effect is especially pronounced if the bridge is on a horizontal or vertical curve. Care must be taken that deck drainage details reflect the cross slope effect.

Girder lengths shall be modified for added length along grade slope.

F. Curve Effect and Flare Effect

Curves and tapered roadways each tend to complicate the design of straight girders. The designer must determine what girder spacing to use for dead load and live load design and whether or not a refined analysis, that considers actual load application, is warranted. Normally, the girder spacing at centerline of span can be used for girder design, especially in view of the conservative assumptions made for the design of continuous girders.

G. Girder Pad Reinforcement

Girders with a large "A" dimension may require a deep pad between the top of the girder and the bottom of the deck. When the depth of the pad at the centerline of the girder exceeds 6″, reinforcement shall be provided in the pad as shown in Figure 5.6.4-2.

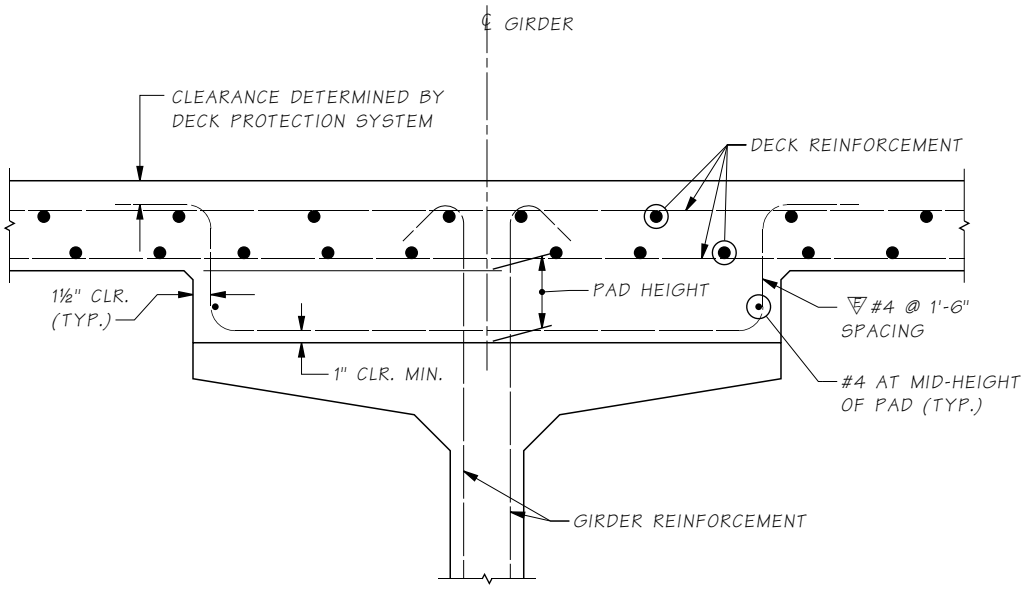

Girder Pad Reinforcement
Figure 5.6.4-2

5.6.5 Repair of Damaged Prestressed Concrete Girders at Fabrication

When girders suffer defects during fabrication or damage before becoming part of a final structure, the girder repairs shall be addressed with pre-approved repair procedures from the current Annual Plant Approval document for the fabricator (see *Standard Specifications* Section 6-02.3(25)A). If the repairs cannot be addressed by this document, the fabricator shall initiate the Fax Resolution process from the current Annual Plant Approval document to address contract specific repairs with the Project Office and HQ Bridge Construction. Normally, no designer action is required. When evaluating repairs for unusual situations not covered, the designer must ensure that the required strength and appearance of the girder can be maintained. If stressing will occur after the repair is made, normally no test loading is required; however, such a test should be considered. See reference [14] for guidance.

5.6.6 Repair of Damaged Prestressed Concrete Girders in Existing Bridges

A. General

This section is intended to cover repair of damaged girders on existing bridges. For repair of newly constructed girders, see Section 5.6.5. Over-height loads are a fairly common source of damage to prestressed concrete girder bridges. The damage may range from spalling and minor cracking of the lower flange of the girder to loss of a major portion of a girder section. Occasionally, one or more strands may be broken. The damage is most often inflicted on the exterior or first interior girder.

B. Repair Procedure

The determination of the degree of damage to a prestressed concrete girder is largely a matter of judgment. Where the flange area has been reduced or strands lost, calculations can aid in making this judgment decision. The following are general categories of damage and suggested repair procedures (see references [15, 16]).

1. Minor Damage

If the damage is slight and concerns only spalling of small areas of the outside surface of the concrete, repair may be accomplished by replacing damaged concrete areas with concrete grout. The area where new concrete is to be applied shall first be thoroughly cleaned of loose material, dried, and then coated with epoxy.

2. Moderate Damage

If damage is moderate, (damage does not exceed replacement criteria in Item 4 below), a repair procedure shall be developed using the following guidelines. It is probable that some prestress will have been lost in the damaged area due to reduction in section and consequent strand shortening or through loss of strands. The following steps shall be part of any proposed repair procedure:

i. **Determine Condition**

Sketch the remaining cross section of the girder and compute its reduced section properties. Determine the stress in the damaged girder due to the remaining prestress and loads in the damaged state. If severe overstresses are found, action must be taken to restrict loads on the structure until the repair has been completed. If the strand loss is so great that AASHTO prestress requirements cannot be met with the remaining strands, consideration should be given to replacing the girder.

ii. **Restore Prestress If Needed**

Prestress in damaged/severed strands can sometimes be restored with mechanical strand couplers. Damaged girders with broken 0.6” diameter strands may need to be repaired with 0.5” diameter strands and additional post-tensioning as needed. Current commercially-available couplers are capable of restoring full prestressing force in strands of up to ½” diameter. Verify that the restoration of full prestress force will not cause overstress in the damaged girder section.

iii. **Prepare a Repair Plan**

Draw a sketch to show the area of concrete removal required for replacement of damaged concrete, and for installation of any mechanical strand couplers required. The damaged area is to be thoroughly prepared, coated with epoxy, and repaired with grout equal in strength to the original concrete.

3. Severe Damage

Where the damage to the girder is considered to be irreparable due to loss of many strands, extreme cracking, etc., the girder shall be replaced. This has been done several times, but involves some care in determining a proper replacement sequence.

In general, the procedure consists of cutting through the existing deck slab and diaphragms and removing the damaged girder. Adequate exposed reinforcement steel must remain to allow splicing of the new bars. The new girder and new reinforcement is placed and previously cut concrete surfaces are cleaned and coated with epoxy. New deck slab and diaphragm portions are then poured.

It is important that the camber of the new girder be matched with that in the old girders. Excessive camber in the new girder can result in inadequate deck slab thickness. Girder camber can be controlled by prestress, curing time, or dimensional changes.

Casting the new bridge deck and diaphragms simultaneously in order to avoid overloading the existing girders in the structure should be considered. Extra bracing of the girder at the time of casting the bridge deck will be required.

Methods of construction shall be specified in the plans that will minimize inconvenience and dangers to the public while achieving a satisfactory structural result. High early strength grouts and concretes should be considered.

In case of replacement of a damaged girder, the intermediate diaphragms adjacent to the damaged girder shall be replaced with full depth diaphragms as shown in Figure 5.6.6-1.

In case of replacement of a damaged girder, the replacement girder should be of the same type or the same depth as the original damaged girder.

In case of repair of a damaged girder with broken or damaged prestressing strands, the original damaged strands shall be replaced with similar diameter strands. Restoration of the prestress force as outlined in Section 5.6.6 B-2b shall be considered.

Existing bridges with pigmented sealer shall have replacement girders sealed. Those existing bridges without pigmented sealer need not be sealed.

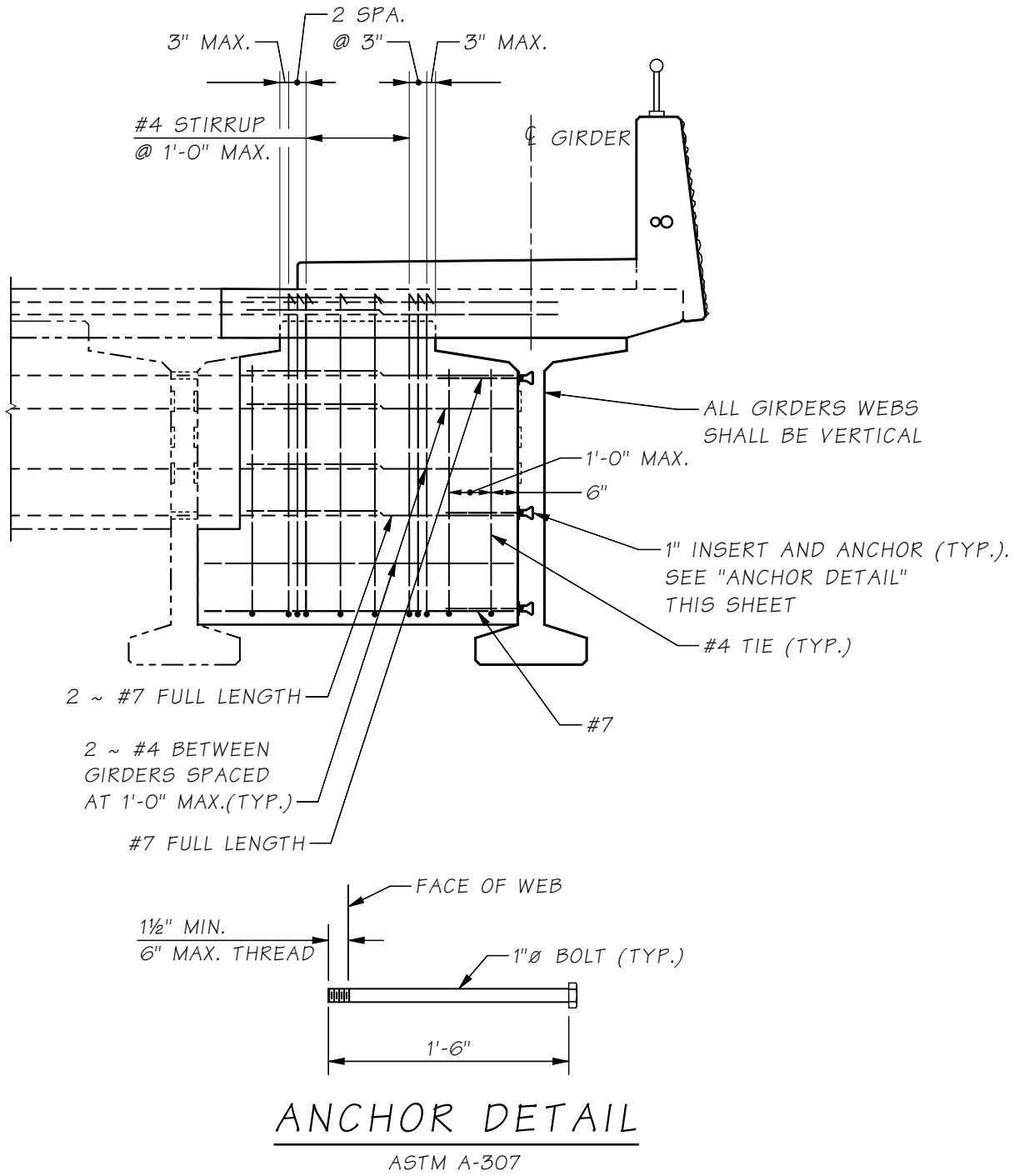

Full Depth Intermediate Diaphragm Replacement
Figure 5.6.6-1

4. Repair vs. Replacement of Damaged Girder

Several factors need to be considered when evaluating whether to repair or to replace a damaged girder. Among them are the level of concrete damage, number of broken strands, location and magnitude of web damage, permanent offset of the original girder alignment, and overall structural integrity. Other considerations include fresh damage to previously damaged girders, damage to adjacent girders, and cost of repair versus replacement. Ultimately, the

evaluation hinges on whether the girder can be restored to its original capacity and whether the girder can be repaired sufficiently to carry its share of the original load.

The following guidelines describe damaged girder conditions which require replacement:

- **Strand Damage** – More than 25 percent of prestressing strands are damaged/severed. If over 25 percent of the strands have been severed, replacement is required. Splicing is routinely done to repair severed strands. However, there are practical limits as to the number of couplers that can be installed in the damaged area.
- **Girder Displacements** – The bottom flange is displaced from the horizontal position more than ½″ per 10′ of girder length. If the alignment of the girder has been permanently altered by the impact, replacement is required. Examples of non-repairable girder displacement include cracks at the web/flange interface that remain open. Abrupt lateral offsets may indicate that stirrups have yielded. A girder that is permanently offset may not be restorable to its original geometric tolerance by practical and cost-effective means.
- **Concrete Damage at Harping Point** – Concrete damage at harping point resulting in permanent loss of prestress. Extreme cracking or major loss of concrete near the harping point may indicate a change in strand geometry and loss in prestress force. Such loss of prestress force in the existing damaged girder cannot be restored by practical and cost effective means, and requires girder replacement.
- **Concrete Damage at Girder Ends** – Severe concrete damage at girder ends resulting in permanent loss of prestress or loss of shear capacity. Extreme cracking or major loss of concrete near the end of a girder may indicate unbonding of strands and loss in prestress force or a loss of shear capacity. Such loss of prestress force or shear capacity in the existing damaged girder cannot be restored by practical and cost-effective means, and requires girder replacement.
- **Significant Concrete Loss from the Web** – Significant damage of concrete in the web that results in loss of shear capacity shall require girder replacement. The web damage shall be considered significant when more than 25 percent of web section is damaged or when shear reinforcement has yielded.

Damaged girders shall be replaced in accordance with current WSDOT design criteria and with current girder series.

There are other situations as listed below which do not automatically trigger replacement, but require further consideration and analysis.

- **Significant Concrete Loss from the Bottom Flange** – For girder damage involving significant loss of concrete from the bottom flange, consideration should be given to verifying the level of stress remaining in the exposed prestressing strands. Residual strand stress values will be required for any subsequent repair procedures.

- **Adjacent Girders** – Capacity of adjacent undamaged girders. Consideration must be given as to whether dead load from the damaged girder has been shed to the adjacent girders and whether the adjacent girders can accommodate the additional load.
- **Previously Damaged Girders** – Damage to a previously damaged girder. An impact to a girder that has been previously repaired may not be able to be restored to sufficient capacity.
- **Cost** – Cost of repair versus replacement. Replacement may be warranted if the cost of repair reaches 70 percent of the replacement project cost.
- **Continuous Girders** – Continuous girders with or without raised crossbeam that requires supporting falsework in the adjacent spans.
- **Superstructure Replacement** – Superstructure replacement shall be considered if more that 50 percent of all girders in the span are damaged or if there is a high risk of future impacts from over-height loads.

C. **Miscellaneous References**

The girder replacement contracts and similar jobs listed in Table 5.6.6-1 should be used for guidance:

Contract	Project Name	Bridge Number	Total Bridge Length (ft)	Year work planned	Work Description
7646	I-5 SR 11 Interchange Chuckanut Overcrossing Bridge	11/1	287	2009	Replace damaged PCG
8133	US 395 Court Street Bridge – Replace / Repair Girders	395/103	114	2011	Replace damaged PCG
8251	I-5 113th Ave SW Bridge Special Repair	5/309	204	2012	Replace damaged PCG
8220	SR 16 Olympic Drive NW Bridge Special Repair	16/120	207	2012	Replace damaged PCG
8218	SR 167 24th St. E Bridge Special Repair	167/38	382	2012	Replace damaged PCG
8489	I-5 Chamber Way Bridge Special Repair	5/227	185	2014	Replace damaged PCG
8598	SR 16 Olympic Drive NW Bridge Special Repair	16/120	207	2014	Replace damaged PCG
8801	I-5 NBCD Over 41st Division Dr. Special Repair	5/411NCD	172	2015	Replace damaged PCG
8810	I-5 Birch Bay Lynden Rd Bridge Bridge Repair	5/834	272	2015	Replace damaged PCG
8813	I-90, Front St Bridge 90/66S Girder Replacement	90/66S	231	2015	Replace damaged PCG
8828	I-90 Stampede Pass Interchange – Bridge Repair	90/113	151	2016	Replace damaged PCG span

Girder Replacement Contracts
Table 5.6.6-1

5.6.7 Deck Girders

A. General

The term "deck girder" refers to a girder whose top flange or surface is the driving surface, with or without an overlay. They include slab, double-tee, ribbed, deck bulb-tee, wide flange deck and wide flange thin deck girders.

Deck girders without a composite CIP concrete deck shall have a minimum concrete cover of 2″ over the top mat. The top mat of reinforcement in the deck girder (top flange) shall be epoxy-coated.

B. Slab Girders

Slab girder spans between centerline bearings shall be limited to the prestressed concrete girder height multiplied by 30 due to unexpected variations from traditional beam camber calculations.

Standard configurations of slab girders are shown in the girder standard plans. The width of slab girders should not exceed 8′-0″.

A minimum 5″ composite CIP bridge deck shall be placed over slab girders. The CIP concrete deck shall at a minimum be Class 4000D concrete with one layer of #5 epoxy coated reinforcement in both the transverse and longitudinal directions. The longitudinal reinforcement shall be spaced at 12 inches maximum and the transverse reinforcement shall be spaced at 6 inches maximum.

The AASHTO LRFD criteria for deflection shall be satisfied for slab girders.

A minimum of two permanent top strands shall be provided for slab girders, one adjacent to each edge. Additional permanent top strands can be used if required to control girder end tensile stresses as well as concrete stresses due to plant handling, shipping and erection.

In some cases it may be necessary to use temporary top strands to control girder end tensile stresses as well as concrete stresses due to plant handling, shipping and erection. These strands shall be bonded for 10′ at both ends of the girder, and unbonded for the remainder of the girder length. Temporary strands shall be cut prior to equalizing girders and placing the CIP bridge deck. Designers may also consider other methods to control girder stresses including debonding permanent strands at girder ends and adding mild steel reinforcement.

The specified design compressive strength ($f'c$) of slab girders should be kept less than or equal to 8 ksi to allow more fabricators to bid.

Girder equalization, shear keys and weld ties are not required when a minimum 5″ composite CIP bridge deck is placed over slab girders. Differential camber is expected to be small but the designer should ensure it can be accommodated by the CIP deck.

Designers should ensure that the cross slope of girder supports are the same at both ends of each girder in order to prevent girder torsion, point loads, and gaps between the girder and the bearings.

Lateral restraint of slab girder superstructures with end type A at abutments shall be provided by external girder stops, one on each side of the bridge.

C. Double-Tee and Ribbed Deck Girders

Double-tee and ribbed deck girders shall be limited to widening existing similar structures. An hot mix asphalt (HMA) overlay with membrane shall be specified. These sections are capable of spanning up to 60′.

D. Deck Bulb-Tee Girders

Deck bulb-tee girders have standard girder depths of 35, 41, 53, and 65 inches. The top flange/deck may vary from 4-feet 1-inch to 6-feet wide. They are capable of spanning up to 155 feet. Deck bulb-tee girders shall be limited to pedestrian bridges, temporary bridges and to widening existing similar structures.

Deck bulb-tee girders shall have an HMA or concrete overlay. A waterproofing membrane shall be provided with an HMA overlay.

Deck bulb-tee girders shall be installed with girder webs plumb. Bridge deck superelevation shall be accommodated by varying the top flange thickness. Superelevation should be limited so that lifting embedments can be located at the center of gravity of the girder to prevent complications with lifting, hauling and erection. Use of deck bulb-tee girders should be avoided when superelevation transitions occur within the span.

Girder size and weight shall be evaluated for shipping and hauling to the project site.

E. Wide Flange Deck Girders

Wide flange deck girders have standard girder depths ranging from 39 inches to 103 inches. The top flange/deck may vary from 5-feet to 8-feet wide. They are capable of spanning up to 195 feet for a 5-foot top flange width and 165 feet for an 8-foot top flange width. Wide flange deck girders shall be limited to pedestrian bridges, temporary bridges and to widening existing similar structures.

Wide flange deck girders shall have an HMA or concrete overlay. A waterproofing membrane shall be provided with an HMA overlay.

Wide flange deck girders shall be installed with girder webs plumb. Bridge deck superelevation shall be accommodated by varying the top flange thickness. Superelevation should be limited so that lifting embedments can be located at the center of gravity of the girder to prevent complications with lifting, hauling and erection. Use of wide flange deck girders should be avoided when superelevation transitions occur within the span.

Girder size and weight shall be evaluated for shipping and hauling to the project site.

F. Wide Flange Thin Deck Girders

Wide flange thin deck girders have standard girder depths ranging from 36 inches to 100 inches. The top flange may vary from 5-feet to 8-feet wide. They are capable of spanning up to 225 feet for a 5-foot top flange width and 200 feet for an 8-foot top flange width.

Wide flange thin deck girders shall have a minimum 5″ thick composite CIP bridge deck. Welded ties and grouted keys at flange edges are not required. The CIP bridge deck thickness shall be capable of accommodating expected girder camber variations and tolerances. Transverse reinforcement in the CIP bridge deck shall be designed to resist live loads and superimposed dead loads. Additional transverse reinforcement may be necessary over the flange edge joints to help control concrete cracking in the CIP bridge deck.

Wide flange thin deck girders shall be installed with girder webs plumb. Bridge deck superelevation shall be accommodated by varying the CIP bridge deck thickness. Use of wide flange thin deck girders should be avoided with large superelevations in order to limit CIP bridge deck thickness.

Girder size and weight shall be evaluated for shipping and hauling to the project site.

5.6.8 Prestressed Concrete Tub Girders

A. General

Prestressed concrete tub girders (U and UF sections) are an option for moderate bridge spans.

The standard tub girders (U sections) have 4′-0″ or 5′-0″ bottom flange widths and are 4′-6″, 5′-6″ or 6′-6″ deep. A 6″ deep top flange can be added to tub girders (UF sections) to improve structural efficiency and to accommodate placement of stay-in-place precast deck panels.

Drain holes shall be provided at the low point of the tub girders at the centerline of the bottom flange.

B. Curved Tub Girders

Curved tub girders may be considered for bridges with moderate horizontal radiuses. I-girders may not be curved.

Curved tub girders can either be designed in one piece or in segments depending on span configurations and shipping limitations. Curved tub girders are post-tensioned at the fabrication plant and shipped to the jobsite. Additional jobsite post-tensioning may be required if segment assembly is necessary, or if continuity over intermediate piers is desired. Closure joints at segment splices shall meet the requirements of Section 5.9.4.C.

The following limitations shall be considered for curved tub girders:

1. The overall width of curved segments for shipment shall not exceed 16 feet.
2. The location of the shipping supports shall be carefully studied so that the segment is stable during shipping. The difference in dead load reactions of the shipping supports within the same axle shall not exceed 5 percent.
3. The maximum shipping weight of segments may be different depending on the size of the segments. The shipping weight shall meet the legal axle load limits set by the RCW, but in no case shall the maximum shipping weight exceed 275 kips.

4. The minimum web thickness shall be 10″. Other cross-sectional dimensions of WSDOT standard tub girders are applicable to curved tub girders.
5. Effects of curved tendons shall be considered in accordance with Section 5.8.1.F.
6. The clear spacing between ducts shall be 2″ min. The duct diameter shall not exceed 4½″.

5.6.9 Prestressed Concrete Girder Checking Requirement

A. Shear reinforcing size and spacing shall be determined by the designer.

B. Determine lifting location and required concrete strength at release to provide adequate stability during handling. Generally temporary strands provide additional stability for lifting and transportation, and reduce the camber. Less camber allows for less "A" dimension and concrete pad dead weight on the structure. Temporary strands are cut after the girders are erected and braced and before the intermediate diaphragms are cast.

C. Due to the extreme depth of the WF83G, WF95G, and WF100G girders, and possible tilt at the piers for profile grades, the designer will need to pay particular attention to details to assure the girders will fit and perform as intended.

D. Check edge distance of supporting cross beam.

5.6.10 Review of Shop Plans for Pre-tensioned Girders

Pretensioning shop drawings shall be reviewed by the designer. Shop drawings, after review by the designer, shall be stamped with the official seal and returned to the bridge construction support office. The review must include:

A. All prestressing strands shall be of ½″ or 0.6″ diameter grade 270 low relaxation uncoated strands.

B. Number of strands per girder.

C. Jacking stresses of strands shall not exceed $0.75 f_{pu}$.

D. Strand placement patterns and harping points.

E. Temporary strand pattern, bonded length, location and size of blockouts for cutting strands.

F. Procedure for cutting temporary strands and patching the blockouts shall be specified.

G. Number and length of extended strands and rebars at girder ends.

H. Locations of holes and shear keys for intermediate and end diaphragms.

I. Location and size of bearing recesses.

J. Saw tooth at girder ends.

K. Location and size of lifting loops or lifting bars.

L. All horizontal and vertical reinforcement.

M. Girder length and end skew.

5.7 Bridge Decks

Concrete bridge decks shall be designed using the Traditional Design of AASHTO LRFD Section 9.7.3 as modified by this section.

The following information is intended to provide guidance for bridge deck thickness and transverse and longitudinal reinforcement of bridge decks. Information on deck protection systems is given in Section 5.7.4.

5.7.1 Bridge Deck Requirements

A. Minimum Bridge Deck Thickness

The minimum bridge deck thickness (including 0.5″ wearing surface) shall be 7.5″ for concrete bridges, 8.0″ for steel girder bridges, and 8.5″ for concrete girder bridges with SIP deck panels. This minimum bridge deck thickness may be reduced by 0.5″ for bridges with Deck Protection Systems 2, 3 and 5.

The minimum CIP bridge deck thickness for prestressed concrete slab girders is 5″.

Minimum bridge deck thicknesses are established in order to ensure that overloads will not result in premature bridge deck cracking.

The minimum clearance between top and bottom reinforcing mats shall be 1″.

B. Computation of Bridge Deck Strength

The design thickness for usual bridge decks are shown in Figures 5.7.1-1 and 2.

The thickness of the bridge deck and reinforcement in the area of the cantilever may be governed by traffic barrier loading. Wheel loads plus dead load shall be resisted by the sections shown in Figure 5.7.1-2.

Design of the cantilever is normally based on the expected depth of the bridge deck at centerline of girder span. This is usually less than the dimensions at the girder ends.

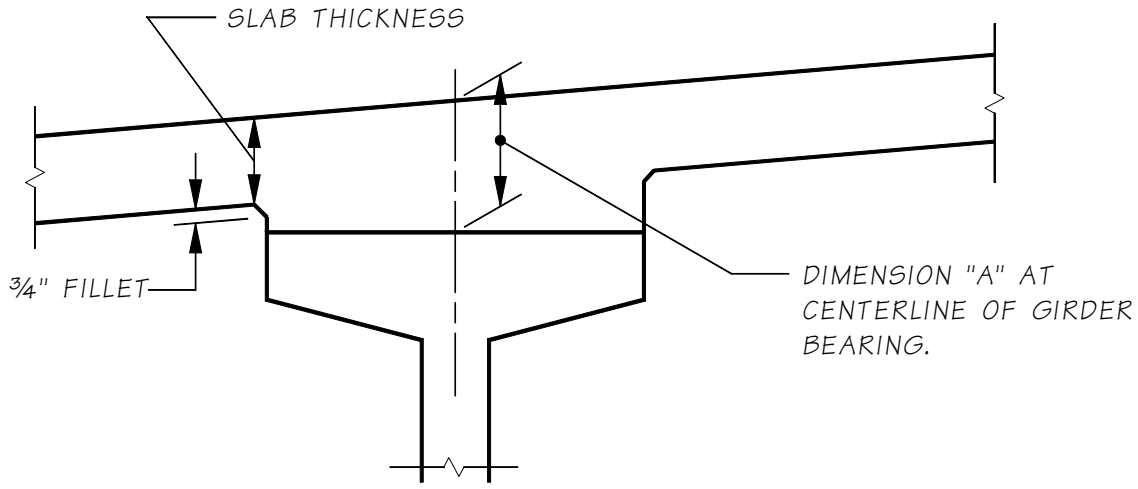

Depths for Bridge Deck Design at Interior Girder
Figure 5.7.1-1

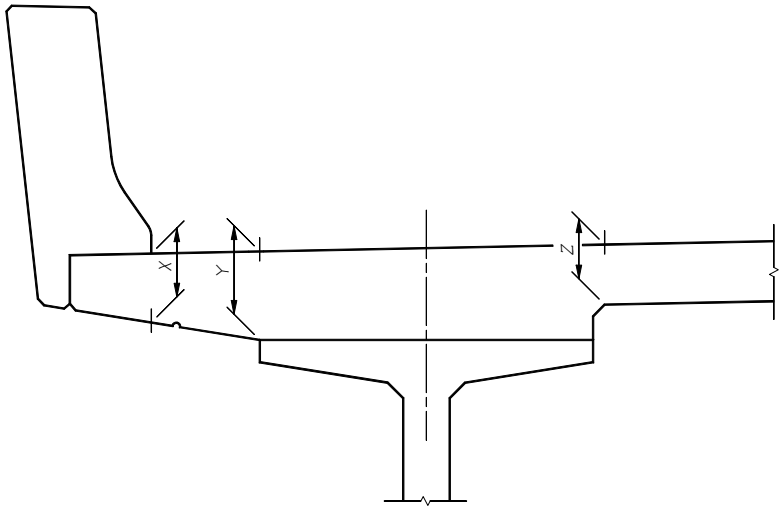

Depths for Bridge Deck Design at Overhang
Figure 5.7.1-2

C. **Computation of "A" Dimension**

The distance from the top of the bridge deck to the top of the girder at centerline bearing at centerline of girder is represented by the "A" Dimension. It is calculated in accordance with the guidance of Appendix 5-B1. This ensures that adequate allowance will be made for excess camber, transverse deck slopes, vertical and horizontal curvatures. Where temporary prestress strands at top of girder are used to control the girder stresses due to shipping and handling, the "A" dimension must be adjusted accordingly.

The note in the left margin of the layout sheet shall read: "A" Dimension = X" (not for design).

5.7.2 Bridge Deck Reinforcement

A. Transverse Reinforcement

The size and spacing of transverse reinforcement may be governed by interior bridge deck span design and cantilever design. Where cantilever design governs, short hooked bars may be added at the bridge deck edge to increase the reinforcement available in that area. Top transverse reinforcement is always hooked at the bridge deck edge unless a traffic barrier is not used. Top transverse reinforcement is preferably spliced at some point between girders in order to allow the clearance of the hooks to the bridge deck edge forms to be properly adjusted in the field. Usually, the bridge deck edge hooks will need to be tilted in order to place them. On larger bars, the clearance for the longitudinal bar through the hooks shall be checked. Appendices 5.3-A5 through 5.3-A8 can be used to aid in selection of bar size and spacing.

For skewed spans, the transverse bars are placed normal to bridge centerline and the areas near the expansion joints and bridge ends are reinforced by partial length bars. For raised crossbeam bridges, the bottom transverse bridge deck reinforcement is discontinued at the crossbeam.

The spacing of bars over the crossbeam must be detailed to be large enough to allow concrete to be poured into the crossbeam. For typical requirements, see Section 5.3.3.D.

For bridge decks with a crowned roadway, the bottom surface and rebar shall be flat, as shown in Figure 5.7.2-1.

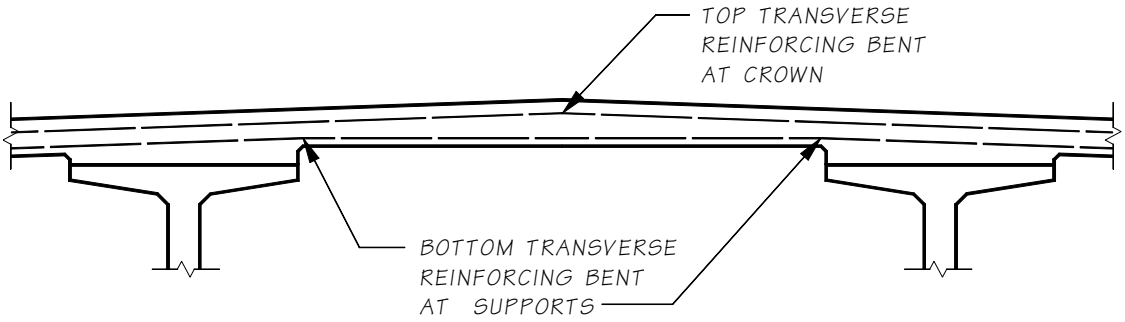

Bottom of Bridge Deck at Crown Point
Figure 5.7.2-1

B. Longitudinal Reinforcement

This section discusses reinforcement requirements for resistance of longitudinal moments in continuous multi-span prestressed concrete girder bridges and is limited to reinforcement in the bridge deck since capacity for resisting positive moment is provided by the girder reinforcement.

1. Simple Spans

For simple span bridges, longitudinal bridge deck reinforcement is not required to resist negative moments and therefore the reinforcement requirements are nominal. Figure 5.7.2-2 defines longitudinal reinforcement requirements for these decks. The bottom longitudinal reinforcement is defined by AASHTO LRFD Section 9.7.3.2 requirements for distribution reinforcement. The top longitudinal reinforcement is based on current office practice.

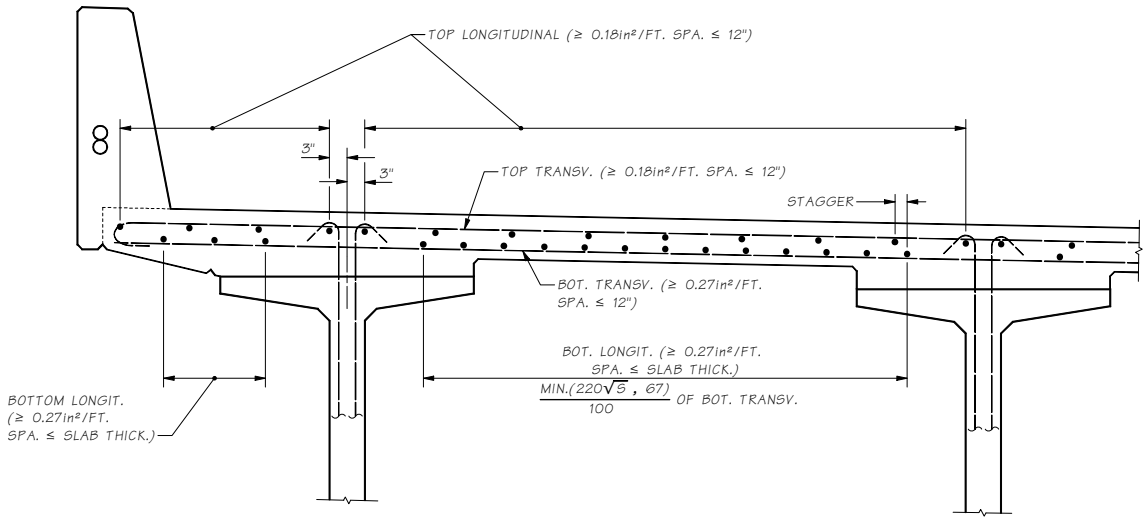

Nominal Longitudinal Bridge Deck Reinforcement
Figure 5.7.2-2

2. Continuous Spans

Continuity reinforcement shall be provided at supports for loads applied after establishing continuity. The longitudinal reinforcement in the bridge deck at intermediate piers is dominated by the negative moment requirement. Where these bars are cut off, they are lapped by the nominal top longitudinal reinforcement described in Section 5.7.2.D. The required bridge deck thickness for various bar combinations is shown in Table 5.7.2-1.

C. Distribution of Flexural Reinforcement

The provision of AASHTO LRFD Section 5.6.7 for class 2 exposure condition shall be satisfied for both the top and bottom faces of the bridge deck.

	Minimum Bridge Deck Thickness (Inches) Transverse Bar		
Longitudinal Bar	**#5**	**#6**	**#7**
#4	7½	--	--
#5	7½	7½	7¾
#6	7½	7¾	8
#7	7¾	8	8¼
#8	8	8½	8¾
#9	8½	8¾	9
#10	8¾	--	--

Note:
Deduct ½″ from minimum bridge deck thickness shown in table when an overlay is used.

Minimum Bridge Deck Thickness for Various Bar Sizes
Table 5.7.2-1

D. Bar Patterns

Figure 5.7.2-3 shows two typical top longitudinal reinforcing bar patterns. Care must be taken that bar lengths conform to the requirements of Section 5.1.2.

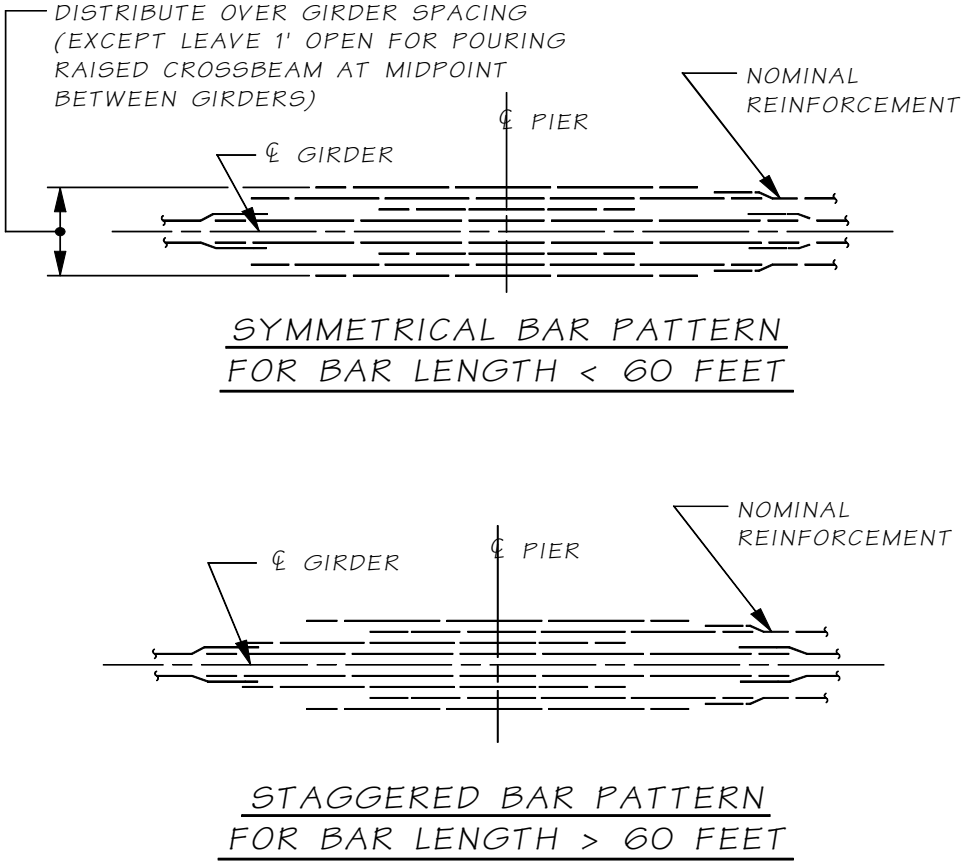

Longitudinal Reinforcing Bar Patterns
Figure 5.7.2-3

The symmetrical bar pattern shown should normally not be used when required bar lengths exceed 60 feet. If the staggered bar pattern will not result in bar lengths within the limits specified in Section 5.1.2, the method shown in Figure 5.7.2-4 may be used to provide an adequate splice. All bars shall be extended by their development length beyond the point where the bar is required.

Normally, no more than 33 percent of the total area of main reinforcing bars at a support (negative moment) or at midspan (positive moment) shall be cut off at one point. Where limiting this value to 33 percent leads to severe restrictions on the reinforcement pattern, an increase in figure may be considered. Two reinforcement bars shall be used as stirrup hangers.

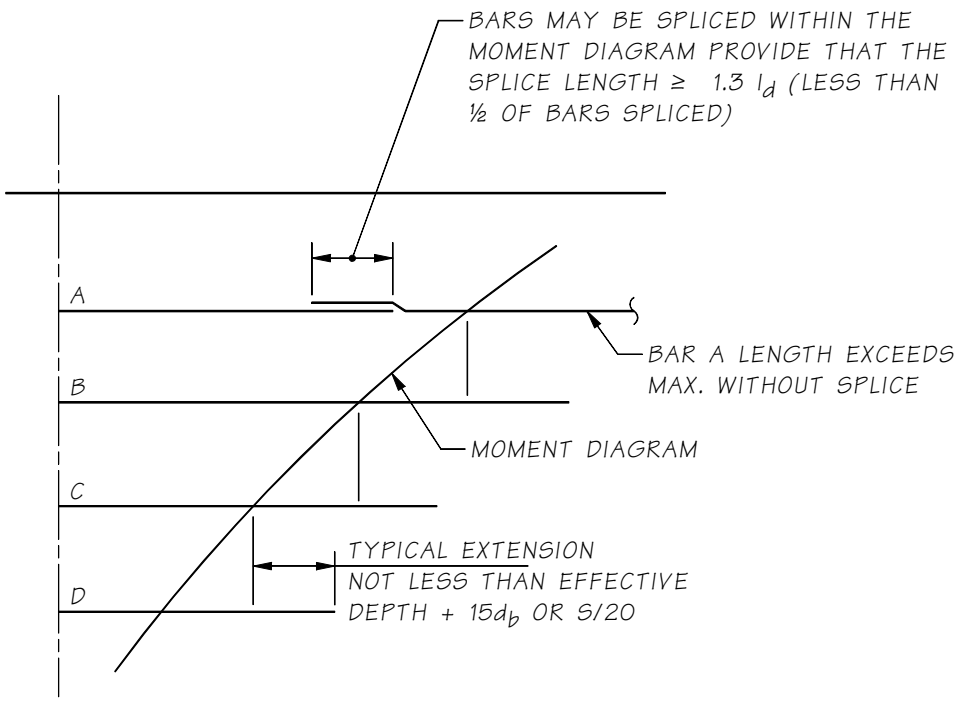

Bar Splice Within Moment Envelope
Figure 5.7.2-4

E. Concrete Bridge Deck Design and Detailing

These requirements are primarily for beam-slab bridges with main reinforcement perpendicular to traffic:

- Minimum cover over the top layer of reinforcement shall be 2.5″ including 0.5″ wearing surface **(**Deck Protection Systems 1 and 4). The minimum cover over the bottom layer reinforcement shall be 1.0″.
- The minimum clearance between top and bottom reinforcing mats shall be 1″.
- A maximum bar size of #5 is preferred for longitudinal and transverse reinforcement in the bridge deck except that a maximum bar size of #7 is preferred for longitudinal reinforcement at intermediate piers.
- The minimum amount of reinforcement in each direction shall be 0.18 in^2/ft for the top layer and 0.27 in^2/ft for the bottom layer. The amount of longitudinal reinforcement in the bottom of bridge decks shall not be less than $\frac{220}{\sqrt{S}} \leq 67$ percent of the positive moment as specified in AASHTO LRFD Sectin 9.7.3.2.
- Top and bottom reinforcement in longitudinal direction of bridge deck shall be staggered to allow better flow of concrete between the reinforcing bars.
- The maximum bar spacing in transverse and longitudinal directions for the top mat, and transverse direction of the bottom mat shall not exceed 12″. The maximum bar spacing for bottom longitudinal within the effective length, as specified in AASHTO LRFD Section 9.7.2.3, shall not exceed the deck thickness.
- Allow the Contractor the option of either a roughened surface or a shear key at the intermediate pier diaphragm construction joint.

- Both, top and bottom layer reinforcement shall be considered when designing for negative moment at the intermediate piers.
- Reduce lap splices if possible. Use staggered lap splices for both top and bottom in longitudinal and transverse directions.

5.7.3 Stay-in-place Deck Panels

A. General

The use of precast, prestressed stay-in-place (SIP) deck panels for bridge decks may be investigated at the preliminary design stage. The acceptance evaluation will consider such items as extra weight for seismic design and the resulting substructure impacts.

The composite deck system consisting of precast prestressed concrete deck panels with a CIP topping has advantages in minimizing traffic disruption, speeding up construction and solving constructability issues on certain projects. Contractors, in most cases, prefer this composite deck panel system for bridge decks in traffic congested areas and other specific cases.

SIP deck panels may be used on WSDOT bridges with WSDOT Bridge and Structures Office approval. Details for SIP deck panels are shown on the Bridge Standard Drawings website (www.wsdot.wa.gov/Bridge/Structures/StandardDrawings.htm).

Steel deck forms are not permitted in order to allow inspection of deck soffits and to avoid maintenance of a corrosion protection system.

B. Design Criteria

The design of SIP deck panels follows the AASHTO *LRFD Bridge Design Specifications* and the *PCI Bridge Design Manual*. The design philosophy of SIP deck panels is identical to simple span prestressed concrete girders. They are designed for Service Limit State and checked for Strength Limit State. The precast panels support the dead load of deck panels and CIP topping, and the composite SIP deck panel and CIP cross-section resists the live load and superimposed dead loads. The tensile stress at the bottom of the panel is limited to zero per WSDOT design practice.

C. Limitations on SIP Deck Panels

The conventional full-depth CIP bridge deck shall be used for most applications. However, the WSDOT Bridge and Structures Office may allow the use of SIP deck panels with the following limitations:

1. SIP deck panels shall not be used in negative moment regions of continuous conventionally reinforced bridges. SIP deck panels may be used in post-tensioned continuous bridges.
2. Bridge widening. SIP deck panels are not allowed in the bay adjacent to the existing structure because it is difficult to set the panels properly on the existing structure, and the requirement for a CIP closure. SIP deck panels can be used on the other girders when the widening involves multiple girders.

3. Phased construction. SIP deck panels are not allowed in the bay adjacent to the previously placed deck because of the requirement for a CIP closure.
4. Prestressed concrete girders with narrow flanges. Placement of SIP deck panels on girders with flanges less than 12″ wide is difficult.
5. A minimum bridge deck thickness of 8.5″, including 3.5″ precast deck panel and 5″ CIP concrete topping shall be specified.
6. SIP deck panels are not allowed for steel girder bridges.

5.7.4 Bridge Deck Protection

All bridge decks, precast or cast-in-place slabs, or deck girder structures shall use a deck protection system as described in this section to reduce the deterioration of the bridge deck and superstructure. The WSDOT Bridge Management Unit shall determine the type of protection system during the preliminary plan or Request For Proposal (RFP) stage for structures not described in this section. Special conditions (i.e. a widening) where it may be desirable to deviate from the standard deck protection systems require approval of the WSDOT Bridge Management Unit.

Preliminary plans shall indicate the protection system in the left margin in accordance with Section 2.3.8.

Saw cutting or grinding pavement items are not allowed on the bridge decks. Rumble strips and recessed pavement markers shall not be placed on bridge decks, or approach slab surfaces whether they are concrete or asphalted as stated in *Standard Specifications* Section 8-08 and 8-09, respectively.

Traffic detection loops shall not be located in an existing bridge surface. They may be installed during the construction of bridge decks prior to placing the deck concrete in accordance with Standard Plan J-50.16.

A. Deck Protection Systems

The following paragraphs describe five WSDOT protective systems used to protect a concrete bridge deck design.

1. Type 1 Protection System

This is the minimum default protection system for cases where a protection system has not been specified on a structure. Type 1 protection system shall be used for cast-in-place bridge decks with two layers of reinforcement, see Figure 5.7.4-1. This also applies to CIP slab bridges, deck replacements and the widening of existing decks. System 1 consists of the following:

i. A minimum 2½″ of concrete cover over top bar of deck reinforcing. The cover includes a ½″ wearing surface and ¼″ tolerance for the placement of the reinforcing steel.

ii. Both the top and bottom mat of deck reinforcing shall be epoxy-coated.

iii. Girder stirrups and horizontal shear reinforcement do not require epoxy-coating.

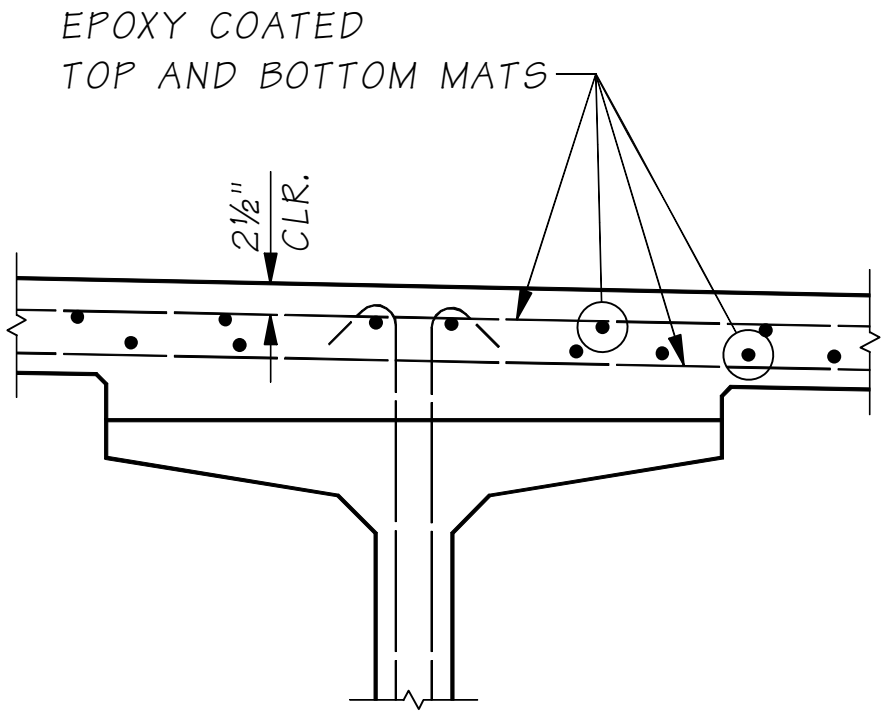

Type 1 Protection System
Figure 5.7.4-1

2. Type 2 Protection System

This protection system consists of concrete overlays, see Figure 5.7.4-2. Concrete overlays are generally described as a 1.5″ unreinforced layer of modified concrete used to rehabilitate an existing deck. Overlay concrete is modified to provide a low permeability that slows or prevents the penetration of water into the bridge deck, but also has a high resistance to rutting.

WSDOT Bridge Management Unit shall determine the type of concrete overlay placed on all new or existing decks; and may specify similar overlays such as a polyester or RSLMC in special cases when rapid construction is cost effective. Brief descriptions of common overlays are as follows.

i. 1½″ Modified Concrete Overlay

These overlays were first used by WSDOT in 1979 and have an expected life between 20-40 years. There are more than 600 bridges with concrete overlays as of 2010. This is the preferred overlay system for deck rehabilitation that provides long-term deck protection and a durable wearing surface. In construction, the existing bridge deck is hydromilled ½″ prior to placing the 1.5″ overlay. This requires the grade to be raised 1″. The modified concrete overlay specifications allow a contractor to choose between a Latex, Microsilica or Fly ash mix design. Construction requires a deck temperature between 45°F–75°F with a wind speed less than 10 mph. Traffic control can be significant since the time to construct and cure is 42 hours.

ii. ¾″ Polyester Modified Concrete Overlay

These overlays were first used by WSDOT in 1989 and have an expected life between 20-40 years with more than 20 overlay as of 2010. This type of overlay uses specialized polyester equipment and materials. Construction requires dry weather with temperatures above 50°F and normally cures in 4 hours. A polyester concrete overlay may be specified in special cases when rapid construction is needed.

iii. 1½″ Rapid Set Latex Modified Concrete Overlay

A rapid set latex modified concrete (RSLMC) overlay uses special cement manufactured by the CTS Company based in California. RSLMC is mixed in a mobile mixing truck and applied like a regular concrete overlay. The first RSLMC overlay was applied to bridge 162/20 South Prairie Creek in 2002 under Contract No. 016395. Like polyester, this overlay cures in 4 hours and may be specified in special cases when rapid construction is needed.

iv. ½″ Thin Polymer Overlay

Thin polymer overlays are built up layers of a polymer material with aggregate broad cast by hand. The first thin overlay was placed in 1986 and after placing 25 overlays, they were discontinued in the late 1998 due to poor performance.

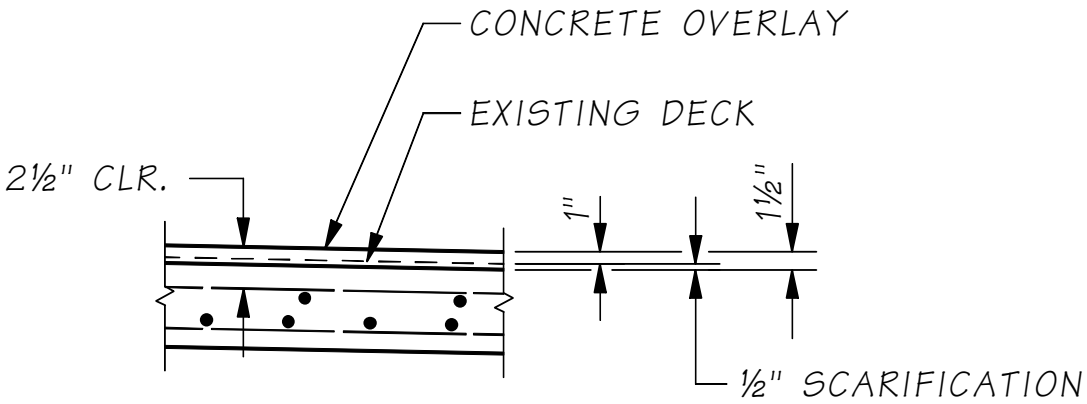

Type 2 Protection System
Figure 5.7.4-2

3. Type 3 Protection System

This protection system consists of a Hot Mixed Asphalt (HMA) overlay wearing surface and requires the use of a waterproofing membrane, see Figure 5.7.4-3. HMA overlays provide a lower level of deck protection and introduce the risk of damage by planing equipment during resurfacing. Asphalt overlays with a membrane were first used on a WSDOT bridges in 1971 and about ⅓ of WSDOT structures have HMA. The bridge HMA has an expected life equal to the roadway HMA when properly constructed.

Waterproof membranes are required with the HMA overlay. Unlike roadway surfaces, the HMA material collects and traps water carrying salts and oxygen at the concrete surface deck. This is additional stress to an epoxy protection system or a bare deck and requires a membrane to mitigate the penetration of salts and oxygen to the structural reinforcement and cement paste. See *Standard Specifications* for more information on waterproof membranes.

HMA overlays may be used in addition to the Type 1 Protection System for new bridges where it is desired to match roadway pavement materials. New bridge designs using HMA shall have a depth of overlay between 0.15′ (1.8″) and 0.25′ (3″). Designers should consider designing for a maximum depth of 0.25′ to allow future overlays to remove and replace 0.15′ HMA without damaging the concrete cover or the waterproof membrane. Plan sheet references to the depth of HMA shall be in feet, since this is customary for the paving industry. WSDOT roadway resurfacing operations will normally plane and pave 0.15′ of HMA which encourages the following design criteria.

Existing structures may apply an HMA overlay in accordance with the Bridge Paving Policies, Section 5.7.5.

Standard Plan A-40.20.00, Bridge Transverse Joints Seals for HMA provides some standard details for saw cutting small relief joints in HMA paving. Saw cut joints can have a longer life, better ride, and help seal the joint at a location known to crack and may be used for small bridge expansion joints less than 1 inch.

WSDOT prohibits the use of a Type 3 Protection System for prestressed concrete slab girder or deck girder bridges managed by WSDOT except for pedestrian bridges or for widening existing similar structures with an HMA overlay. The HMA with membrane provides some protection to the connections between girders, but can be prone to reflective cracking at the joints. It is not uncommon for voided slabs to fill with water and aggressively corrode the reinforcement. Prestressed concrete members with a Type 3 Protection System shall have a minimum cover of 2″ over an epoxy coated top mat.

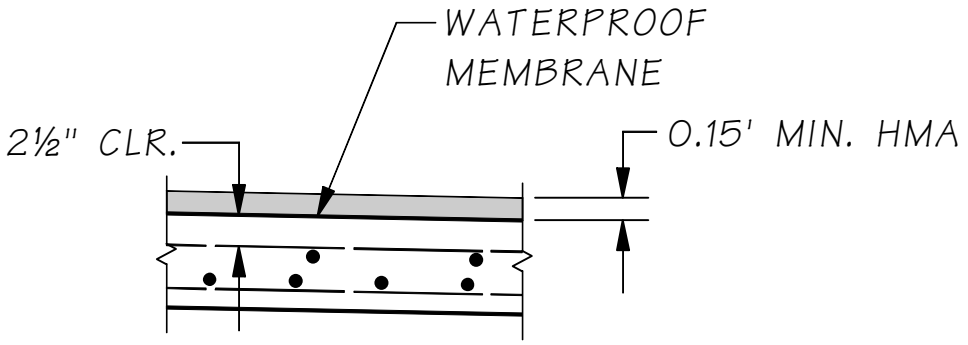

Type 3 Protection System
Figure 5.7.4-3

4. Type 4 Protection System

This system is a minimum 5″ cast-in-place (CIP) topping with one mat of epoxy coated reinforcement and placed on prestressed concrete slab girder and deck girder members, see Figure 5.7.4-4. This system eliminates girder wheel distribution problems, provides a quality protection system and provides a durable wearing surface.

i. A minimum concrete cover of 1″ applies to the top mat of the top flange of the prestressed member.

ii. Epoxy coating the prestressed member top mat reinforcement is not required.

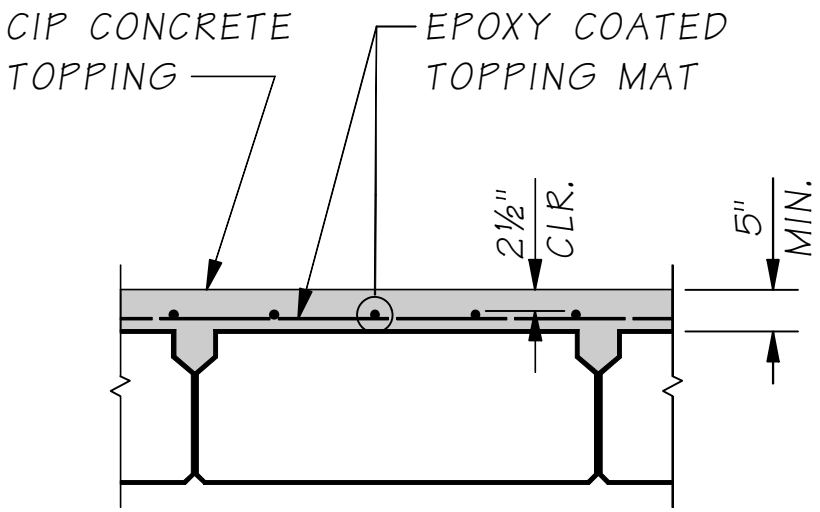

Type 4 Protection System
Figure 5.7.4-4

5. Type 5 System

This system requires a layered, 3″ concrete cover for double protection, see Figure 5.7.4-5. All segmentally constructed bridges shall use this system to protect construction joints and provide minor grade adjustments during construction. Bridge decks with transverse or longitudinal post-tensioning in the deck shall use this system since deck rehabilitation due to premature deterioration is very costly. The 3″ cover consists of the following:

i. The deck is constructed with a 1¾″ concrete cover.

ii. Both the top and bottom mat of deck reinforcing are epoxy-coated. Girder/web stirrups and horizontal shear reinforcement does not require epoxy-coating.

iii. The deck is then scarified ¼″ prior to the placement of a modified concrete overlay. Scarification shall be diamond grinding to preserve the integrity of the segmental deck and joints.

iv. A Type 2a, 1½″ Modified Concrete Overlay is placed as a wearing surface.

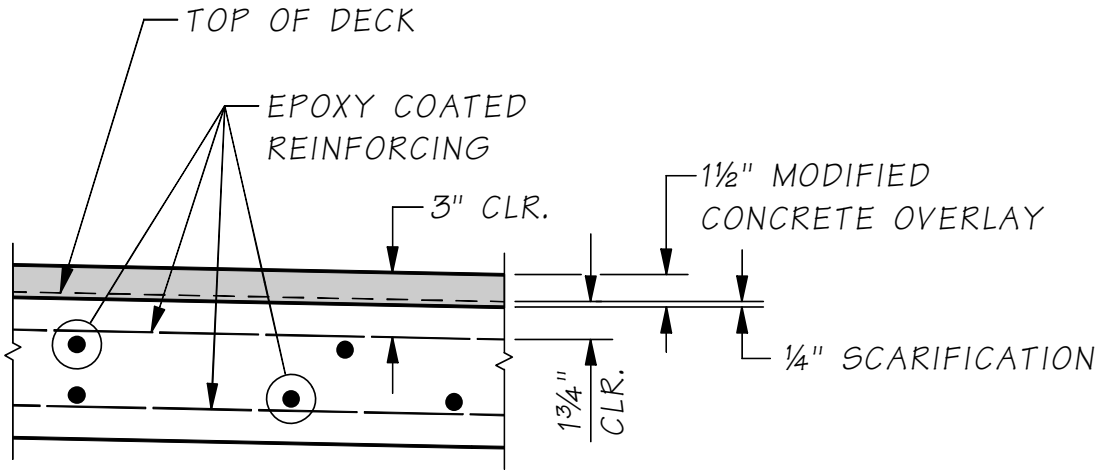

Type 5 Protection System
Figure 5.7.4-5

B. Existing Bridge Deck Widening

New deck rebar shall match the existing top layer. This provides steel at a uniform depth which is important when removing concrete during future rehab work. Bridges prior to the mid 1980's used 1½″ concrete cover. New and widened decks using a Type 1 Protection System have 2½″ cover.

When an existing bridge is widened, the existing concrete or asphalt deck may require resurfacing. WSDOT is forced to rehab concrete decks based on the condition of the existing deck or concrete overlay. If a deck or overlay warrants rehabilitation, then the existing structure shall be resurfaced and included in the widening project.

By applying the stated design criteria, the following policies shall apply to bridge widening projects which may require special traffic closures for the bridge work.

1. Rebar

The deck or cast-in-place slab of the new widened portion shall use the Type 1 Protection System, even though the existing structure has bare rebar. The top mat of new rebar shall match the height of existing rebar. Variations in deck thickness are to be obtained by lowering the bottom of the deck or slab.

2. Concrete Decks

If the existing deck is original concrete without a concrete overlay, the new deck shall have a Type 1 Protection System and the existing deck shall have a 1½″ concrete overlay or Type 2 Protection System. This matches the rebar height and provides a concrete cover of 2.5″ on both the new and old structure.

If the existing deck has a concrete overlay, the new deck shall have a Type 1 Protection System and the existing overlay shall be replaced if the deck deterioration is greater than 1 percent of the deck area.

3. Concrete Overlays

It is preferred to place a concrete overlay from curb to curb. If this is problematic for traffic control, then Plans shall provide at least a 6″ offset lap where the overlay construction joint will not match the deck construction joint.

4. HMA Overlays

The depth of existing asphalt must be field measured and shown on the bridge plans. This mitigates damage of the existing structure due to removal operations and reveals other design problems such as: improper joint height, buried construction problems, excessive weight, or roadway grade transitions adjustments due to drainage.

The new deck must meet the rebar and cover criteria stated above for Concrete Decks and deck tinning is not required. Type 3 Protection system shall be used and HMA shall be placed to provide a minimum 0.15′ or the optimum 0.25′.

5. Small Width Widening

With approval of the WSDOT Bridge Management Unit, smaller width widening design that has traffic on the new construction can match existing 1½″ concrete cover for the widened portion, if the existing deck deterioration is greater than 1 percent of the deck area.

6. Expansion Joints

All joints shall be in good condition and water tight for the existing bridge and the newly constructed widened portion. The following joint criteria applies:

i. The existing expansion joint shall be replaced if:
   - More than 10 percent of the length of a joint has repairs within 1′-0″ of the joint.
   - Part of a joint is missing.
   - The joint is a non-standard joint system placed by maintenance.

ii. All existing joint seals shall be replaced.

iii. When existing steel joints are not replaced in the project, the new joint shall be the same type and manufacturer as the existing steel joint.

iv. Steel joints shall have no more than one splice and the splice shall be at a lane line. Modular joints shall not have any splices.

5.7.5 Bridge Deck HMA Paving Design Policies

This Section of the BDM establishes the criteria used to provide bridge paving design options for paving projects. Bridge paving design options are customized for each bridge based on the existing conditions and previous paving. Paving designers including paving consultants are required to request a Bridge deck Condition Report (BCR) for each bridge which contains the paving design options and other relevant bridge information for each bridge within the project limits.

An asphalt wearing surface is a recognized method to manage concrete rutting, improve the ride on HMA roadways, and is a form of deck protection. Bridges may or may not have the capacity to carry the additional dead load of an asphalt wearing surface. The design options are documented for the paving project in a BCR. The Bridge Office will provide bridge sheets for structural items and the required Special Provisions for the WSDOT projects. The Bridge Office Projects and Design Engineer should be notified early in the paving design to allow time to complete engineering and plan sheets.

All WSDOT structures within the defined project limits must be evaluated for paving or Bituminous Surface Treatment (BST or chip seal). All bridges shall be identified in the Plans as "INCLUDED IN PROJECT" or "NOT INCLUDED" in accordance with *Plan Preparation Manual* Section 4 "Vicinity Map", paragraph (n). This includes all state bridges and not limited to:

1. Off the main line. Typical locations include bridges on ramps, frontage roads, or bridges out of right-of-way.
2. Bridges where the main line route crosses under the structure.
3. Bridges at the beginning and ending stations of the project. It is not necessary to include the bridge when it was recently resurfaced, but it should be included if incidental joint maintenance repairs are necessary.

Region is responsible for field evaluation of paving condition and the depth of asphalt provided by the last paving contract. Asphalt depths can vary on the concrete deck and from bridge to bridge. In most cases, asphalt depth measurements at the fog line on the four corners of the deck are sufficient to establish a design depth for contracts. The Bridge Asset Manager shall be informed of the measurements. Paving shown in the Plans would use an approximate or averaged value of the measurements. Some situations may require a Plan Detail showing how the depth varies for the Planing Contractor.

A standard Microstation detail is available to simplify detailing of bridge paving in the Plans, see "SH_DT_RDSECBridgeDeckOverlay_Detail". The table format is copied from the BCR and allows the bridge paving design requirements to be listed in the table. All bridges within the limits of the project must be listed in the table to clarify which structures do not have paving and facilitate data logging for the Washington State Pavement Management System and the Bridge Office.

The following bridge paving policies have been developed with the concurrence of WSDOT Pavement Managers to establish bridge HMA Design options available for state managed structures.

1. Maximum HMA Depth

Bridge decks shall be 0.25′ or 3″. A greater depth may be allowed if the structure is specifically designed for more than 0.25′, such as structures with ballast or as approved by the WSDOT Load Rating Engineer. Paving designs that increase the HMA more than 3″ require a new Load Rating analysis and shall be submitted to the WSDOT Load Rating Engineer.

a. Concrete bridge decks with more than 0.21′ HMA may be exempted from paving restrictions for mill/fill HMA design.

b. Prestressed concrete deck girders and slabs with less than 0.25′ HMA require paving restrictions to avoid planing the supporting structure.

c. A paving grade change will be required when more than 0.25′ of asphalt exists on a structure in order to reduce the weight on the structure and meet acceptable rail height standards.

2. Grade limited/0.15′

For bridge decks with 0.15′ HMA and the grade is limited by bridge joint height or other considerations, resurfacing must provide full depth removal of HMA or mill/fill the minimum 0.12′.

3. Grade Transitions

When raising or lowering the HMA grade profile on/off or under the bridge, the maximum rate of change or slope shall be 1″/40′ (1′/500′) as shown in Standard Plan A60.30.00, even if this means extending the project limits. Incorrect transitions are the cause of many "bumps at the bridge" and create an undesired increase in truck loading. The following items should be considered when transitioning a roadway grade:

a. Previous HMA overlays that raised the grade can significantly increase the minimum transition length.

b. Drainage considerations may require longer transitions or should plane to existing catch basins.

c. Mainline paving that raises the grade under a bridge must verify Vertical Clearance remains in conformance to current Vertical Clearance requirements. Mill/Fill of the roadway at the bridge is generally desired unless lowering the grade is required.

i. *Design Manual* Section 720.04 Bridge Site Design Elements, (5) Vertical Clearances, (c) Minimum Clearance for Existing Structures, 1. Bridge Over a Roadway.

4. Full Removal

Full depth removal and replacement of the HMA is always an alternate resurfacing design option. Full depth removal may be required by the Region Pavement Manager or the Bridge Office due to poor condition of the HMA or bridge deck. Bridge Deck Repair and Membrane Waterproofing (Deck Seal) standard pay items are required for this option and the Bridge Office will provide engineering estimates of the quantity (SF) and cost for both.

a. Bridge Deck Repair will be required when the HMA is removed and the concrete is exposed for deck inspection. Chain Drag Testing is completed and based on the results, the contractor is directed to fix the quantity of deck repairs. The Chain Drag results are sent to the Bridge Asset Manager and used by the Bridge Office to monitor the condition of the concrete deck and determine when the deck needs rehabilitation or replacement.

b. Membrane Waterproofing (Deck Seal) is Standard Item 4455 and will be required for all HMA bridge decks, except when the following conditions are met.

i. HMA placed on a deck that has a Modified Concrete Overlay which acts like a membrane.

ii. The bridge is on the P2 replacement list or deck rehabilitation scheduled within the next 4 years or two bienniums.

5. Bare Deck HMA

Paving projects may place HMA on a bare concrete deck, with concurrence of the WSDOT Bridge Asset Manager, if the bridge is on an HMA route and one of the following conditions apply.

a. Rutting on the concrete deck is ½″ or more.

b. The Region prefers to simplify paving construction or improve the smoothness at the bridge.

When the concrete bridge deck does not have asphalt on the surface, Region Design should contact the Region Materials lab and have a Chain Drag Report completed and forwarded to the Bridge Asset Manager during design to establish the Bridge Deck Repair quantities for the project. Pavement Design should then contact Region Bridge Maintenance to request the repairs be completed prior to contract; or the repairs may be included in the paving contract. Small amounts of Bridge Deck Repair have an expensive unit cost by contract during paving operations.

6. Bridge Transverse Joint Seals

Saw cut pavement joints shown in Standard Plan A-40.20.00 perform better and help prevent water problems at the abutment or in the roadway. Typical cracking locations where pavement joint seals are required: End of the bridge; End of the approach slab; or HMA joints on the deck. Standard Plan A-40.20.00, Detail 8 shall be used at all truss panel joint locations. However, if Pavement Designers do not see cracking at the ends of the bridge, then sawcut joints may be omitted for these locations. HQ Program Management has determined this work is “incidental” to P1 by definition and should be included in a P1 paving project and use Standard Item 6517. The following summarizes the intended application of the Details in Standard Plan A-40.20.00.

a. Detail 1

Applies where HMA on the bridge surface butts to the HMA roadway.

b. Detail 2, 3, & 4

Applies where concrete bridge surface butts to the HMA roadway.

c. Detail 8

Applies at truss panel joints or generic open concrete joints.

d. Detail 5, 6 &7

For larger 1″ sawcut joints instead of ½″ joints provided in details 2, 3, & 4.

7. BST (chip seal)

Bituminous Surface Treatments ½″ thick may be applied to bridge decks with HMA under the following conditions.

a. Plans must identify or list all structures bridges included or expected within project limits and identify bridge expansion joint systems to be protected.

b. BST is not allowed on weight restricted or posted bridges.

c. Planing will be required for structures at the maximum asphalt design depth or the grade is limited.

It is true that BSTs are not generally a problem but only if the structure is not grade limited by for structural reasons. BCRs will specify a ½″ chip seal paving depth of 0.03′ for BST Design to be consistent with Washington State Pavement Management System. Plans should indicate ½″ chip seal to be consistent with *Standard Specifications* and standard pay items.

8. Culverts and Other Structures

Culverts or structures with significant fill and do not have rail posts attached to the structure generally will not have paving limitations. Culverts and structures with HMA pavement applied directly to the structure have bridge paving design limits.

5.8 Cast-in-place Post-Tensioned Bridges

5.8.1 Design Parameters

A. General

Post-tensioning is generally used for CIP construction and spliced prestressed concrete girders since pretensioning is generally practical only for fabricator-produced structural members. The *Post-tensioned Box Girder Bridge Manual*[17] published by the Post-tensioning Institute in 1978 is recommended as the guide for design. This manual discusses longitudinal post-tensioning of box girder webs and transverse post-tensioning of box girder slabs, but the methods apply equally well to other types of bridges. The following recommendations are intended to augment the PTI Manual and the AASHTO *LRFD Specifications* and point out where current WSDOT practice departs from practices followed elsewhere.

The AASHTO criteria for reinforced concrete apply equally to bridges with or without post-tensioning steel. However, designers should note certain requirements unique to prestressed concrete such as special ϕ-factors, load factors and shear provisions.

Post-tensioning consists of installing steel tendons into a hollow duct in a structure after the concrete sections are cast. These tendons are usually anchored at each end of the structure and stressed to a design strength using a hydraulic jacking system. After the tendon has been stressed, the duct is filled with grout which bonds the tendon to the concrete section and prevents corrosion of the strand. The anchor heads are then encased in concrete to provide corrosion protection.

B. Bridge Types

Post-tensioning has been used in various types of CIP bridges in Washington State with box girders predominating. See Appendix 5-B4 for a comprehensive list of box girder designs. The following are some examples of other bridge types:

Kitsap County, Contract 9788, Multi-Span Slab

Peninsula Drive, Contract 5898, Two- Span Box Girder

Covington Way to 180th Avenue SE, Contract 4919, Two-Span Box Girder Longitudinal Post-tensioning

Snohomish River Bridge, Contract 4444, Multi-Span Box Girder Longitudinal Post-tensioning

See Section 2.4.1 for structure type comparison of post-tensioned concrete box girder bridges to other structures. In general, a post-tensioned CIP bridge can have a smaller depth-to-span ratio than the same bridge with conventional reinforcement. This is an important advantage where minimum structure depth is desirable. However, structure depth must be deep enough to accommodate anchorages.

1. Slab Bridge

Structure depth can be quite shallow in the positive moment region when post-tensioning is combined with haunching in the negative moment region. However, post-tensioned CIP slabs are usually more expensive than when reinforced conventionally. Designers should proceed with caution when considering post-tensioned slab bridges because severe cracking in the decks of bridges of this type has occurred [21, 22, 23].

The Olalla Bridge (Contract 9202) could be reviewed as an example. This bridge has spans of 41.5′–50′–41.5′, a midspan structure depth of 15 inches, and some haunching at the piers.

2. T-Beam Bridge

This type of bridge, combined with tapered columns, can be structurally efficient and aesthetically pleasing, particularly when the spacing of the beams and the columns are the same. A T-Beam bridge can also be a good choice for a single-span simply-supported structure.

When equally spaced beams and columns are used in the design, the width of beam webs should generally be equal to the width of the supporting columns. See SR 16, Union Avenue O'Xings, for an example. Since longitudinal structural frame action predominates in this type of design, crossbeams at intermediate piers can be relatively small and the post-tensioning tendons can be placed side-by-side in the webs, resulting in an efficient center of gravity of steel line throughout. For other types of T-Beam bridges, the preferred solution may be smaller, more closely spaced beams and fewer, but larger pier elements. If this type of construction is used in a multispan, continuous bridge, the beam cross-section properties in the negative moment regions need to be considerably larger than the properties in the positive moment regions to resist compression.

Larger section properties can be obtained by gradually increasing the web thickness in the vicinity of intermediate piers or, if possible, by adding a fillet or haunch. The deck slab overhang over exterior webs should be roughly half the web spacing.

3. Box Girder Bridge

This type of bridge has been a popular choice in this state. The cost of a prestressed box girder bridge is practically the same as a conventionally-reinforced box girder bridge, however, longer spans and shallower depths are possible with prestressing.

The superstructure of multi-cell box girders shall be designed as a unit. The entire superstructure section (traffic barrier excluded) shall be considered when computing the section properties.

For criteria on distribution of live loads, see Section 3.9.4. All slender members subjected to compression must satisfy buckling criteria.

Web spacing should normally be 8 to 11 feet and the top slab overhang over exterior girders should be approximately half the girder spacing unless transverse post-tensioning is used. The apparent visual depth of box girder

bridges can be reduced by sloping all or the lower portion of the exterior web. If the latter is done, the overall structure depth may have to be increased. Web thickness should be 12 inches minimum, but not less than required for shear, horizontal and vertical reinforcing, duct placement, and for concrete placing clearance. Providing 2½″ of clear cover expedites concrete placement and consolidation in the heavily congested regions adjacent to the post-tensioning ducts. Webs should be flared at anchorages. Top and bottom slab thickness should normally meet the requirements of Section 5.3.1.B, but not less than required by stress and specifications. Generally, the bottom slab would require thickening at the interior piers of continuous spans. This thickening should be accomplished by raising the top surface of the bottom slab at the maximum rate of ½″ per foot.

C. Strand and Tendon Arrangements

The total number of strands selected should be the minimum required to meet the strength and service limit state requirements at all points. Duct sizes and the number of strands they contain vary slightly, depending on the supplier. Chapter 2 of the PTI Post-tensioned *Box Girder Bridge Manual*, and shop drawings of the recent post-tensioned bridges kept on file in the Construction Plans Section offer guidance to strand selection. In general, a supplier will offer several duct sizes and associated end anchors, each of which will accommodate a range of strand numbers up to a maximum in the range. Present WSDOT practice is to indicate only the design force and cable path on the contract plans and allow the post-tensioning supplier to satisfy these requirements with tendons and anchors. The most economical tendon selection will generally be the maximum size within the range. Commonly-stocked anchorages for ½″ diameter strands include 9, 12, 19, 27, 31, and 37 strands. Commonly-stocked anchorages for 0.6″ diameter strands include 4, 7, 12, 19, 22, and 27 strands. The design should utilize commonly-stocked items. For example, a design requiring 72 strands per web would be most economically satisfied by two standard 37-strand tendons. A less economical choice would be three standard 27-strand tendons containing 24 strands each. Tendons shall not be larger than (37) ½″ strand units or (27) 0.6″ strand units, unless specifically approved by the WSDOT Bridge Design Engineer. The duct area shall be at least 2.5 times the net area of the prestressing steel. In the regions away from the end anchorages, the duct placement patterns indicated in Figures 5.8.1-1 through 5.8.1-3 shall be used.

Although post-tensioning steel normally takes precedence in a member, sufficient room must be provided for other essential mild steel and placement of concrete, in particular near diaphragms and cross-beams.

More prestress may be needed in certain portions of a continuous superstructure than elsewhere, and the designer may consider using separate short tendons in those portions of the spans only. However, the savings on prestressing steel possible with such an arrangement should be balanced against the difficulty involved in providing suitable anchoring points and sufficient room for jacking equipment at intermediate locations in the structure. For example, torsion in continuous, multigirder bridges on a curve can be counter-balanced by applying more prestress in the girders on the outside of the curve than in those on the inside of the curve.

Some systems offer couplers which make possible stage construction of long bridges. With such systems, forms can be constructed and concrete cast and stressed in a number of spans during stage 1, as determined by the designer. After stage 1 stressing, couplers can be added, steel installed, concrete cast and stressed in additional spans. To avoid local crushing of concrete and/or grout, the stress existing in the steel at the coupled end after stage 1 stressing shall not be exceeded during stage 2 stressing.

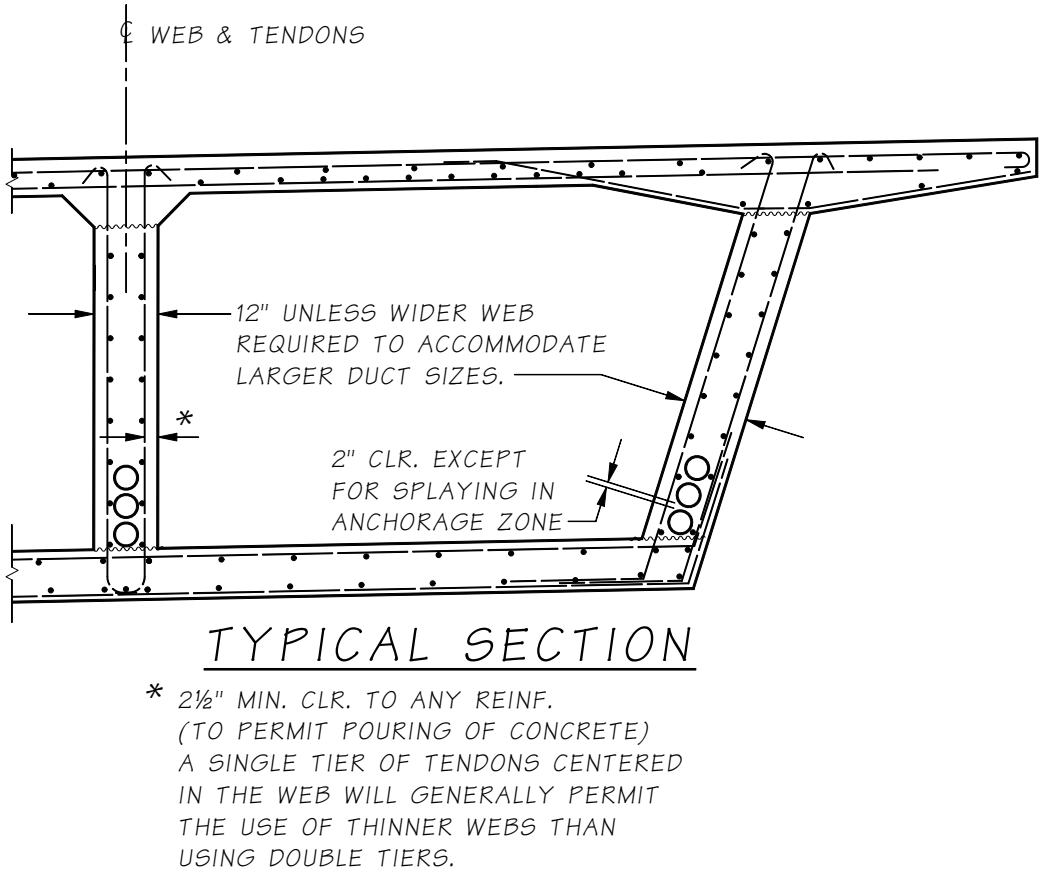

Tendon Placement Pattern for Box Girder Bridges
***Figure* 5.8.1-1**

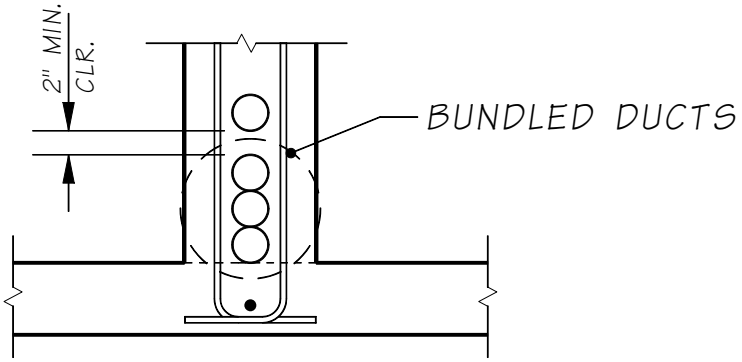

DUCTS 2 " O.D. TO 3" O.D.

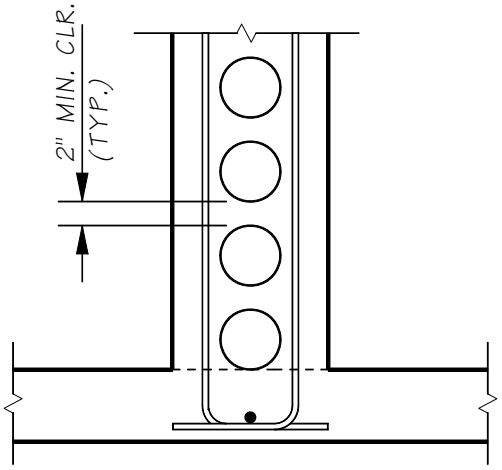

DUCTS OVER 3" O.D.

Tendon Placement Pattern for Box Girder Bridges
Figure 5.8.1-2

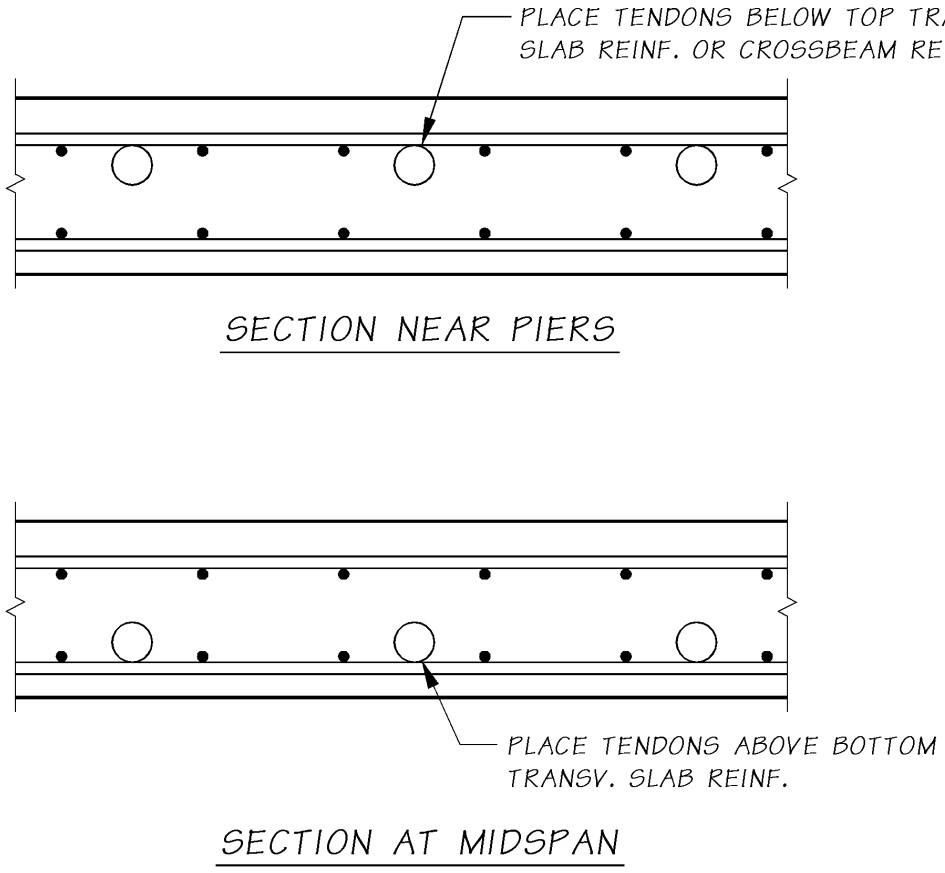

Tendon Placement Pattern for Flat Slab Bridges
Figure 5.8.1-3

D. Layout of Anchorages and End Blocks

Consult industry brochures and shop plans for recent bridges before laying out end blocks. To encourage bids from a wider range of suppliers, try to accommodate the large square bearing plate sizes common to several systems.

Sufficient room must be allowed inside the member for mild steel and concrete placement and outside the member for jacking equipment. The size of the anchorage block in the plane of the anchor plates shall be large enough to provide a minimum of 1″ clearance from the plates to any free edge.

The end block dimensions shall meet the requirements of the AASHTO *LRFD Specifications*. Note that in long-span box girder superstructures requiring large bearing pads, the end block should be somewhat wider than the bearing pad beneath to avoid subjecting the relatively thin bottom slab to high bearing stresses. When the piers of box girder or T-beam bridges are severely skewed, the layout of end blocks, bearing pads, and curtain walls at exterior girders become extremely difficult as shown in Figure 5.8.1-4. Note that if the exterior face of the exterior girder is in the same plane throughout its entire length, all the end block widening must be on the inside. To lessen the risk of tendon break-out through the side of a thin web, the end block shall be long enough to accommodate a horizontal tendon curve of 200 feet minimum radius. The radial component of force in a curved tendon is discussed in AASHTO LRFD Section 5.9.5.4.3.

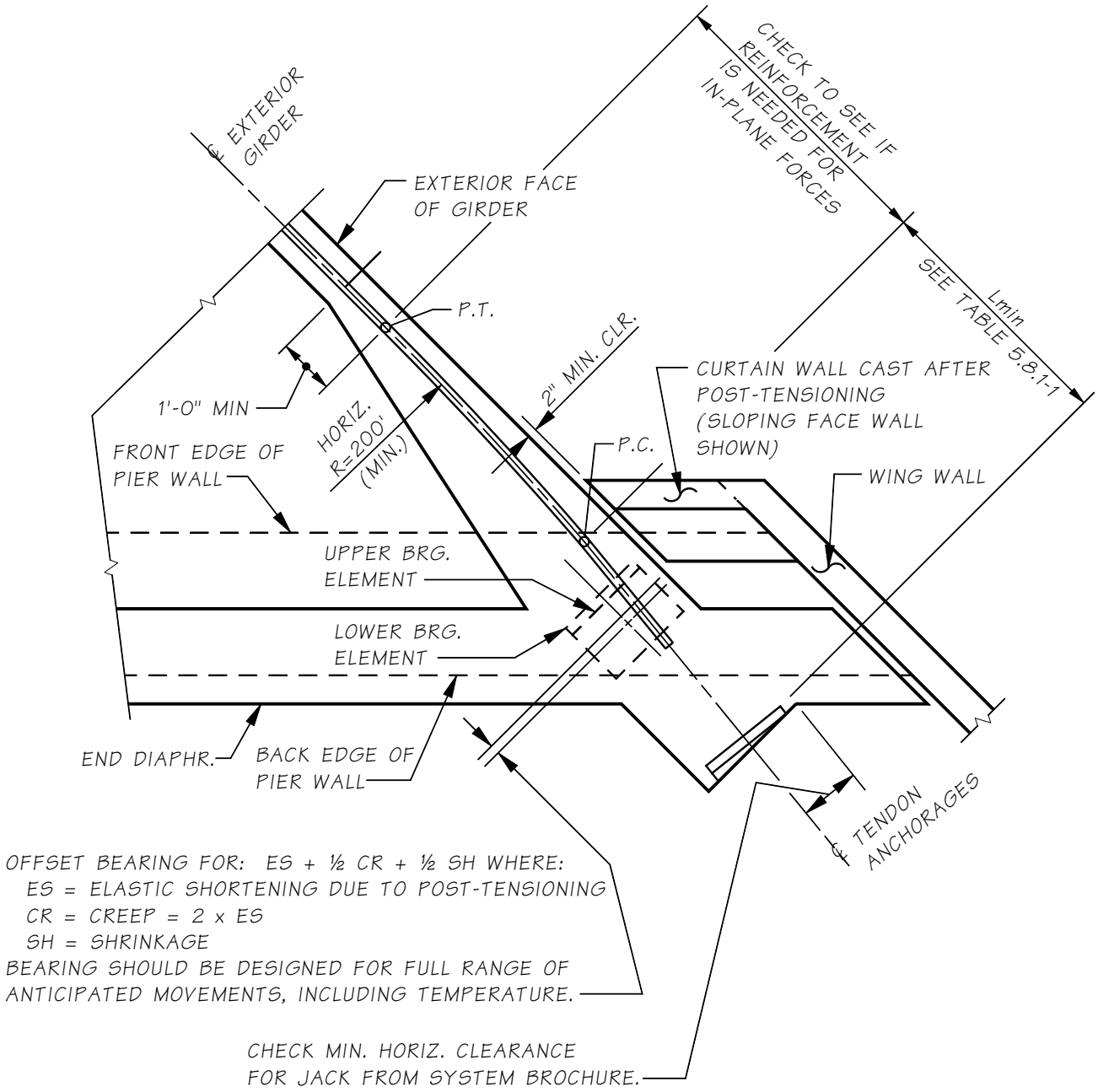

Layout of Anchorages and End Blocks
Figure 5.8.1-4

All post-tensioning anchorages in webs of box girder or multi stem superstructures shall be vertically aligned. Special Anchorage Devices may be used to avoid a staggered anchorage layout. If a staggered layout must be used, the plans shall be reviewed and approved by the WSDOT Bridge Design Engineer.

To ensure maximum anchorage efficiency, maximum fatigue life and prevention of strand breakage, a minimum tangent length at the anchorage is required to ensure that the strands enter the anchorage without kinking.

To prevent excessive friction loss and damage to the prestressing sheathings, adherence to the minimum tendon radii is required.

Table 5.8.1-1 and Figure 5.8.1-5 present the required minimum radius of curvature along with the required minimum tangent lengths at stressing anchorages. Deviation from these requirements needs the approval of the WSDOT Bridge Design Engineer.

Anchor Types	Radii, ft.	Tangent Length, ft.
½" Diameter Strand Tendons		
5-4	7.5	2.6
5-7	9.8	2.6
5-12	13.5	3.3
5-19	17.7	3.3
5-27	21.0	3.3
5-31	22.3	4.9
5-37	24.0	4.9
0.6" Diameter Strand Tendons		
6-4	10.6	3.3
6-7	12.8	3.3
6-12	16.4	3.3
6-19	20.7	4.9
6-22	22.6	4.9
6-31	26.4	4.9

Minimum Tendon Radii and Tangent Length
Table 5.8.1-1

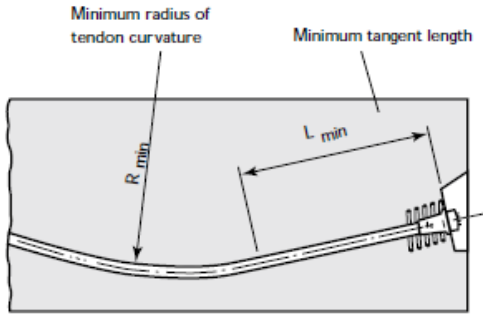

Tangent Length and Tendon Radii
Figure 5.8.1-5

E. Superstructure Shortening

Whenever members such as columns, crossbeams, and diaphragms are appreciably affected by post-tensioning of the main girders, those effects shall be included in the design. This will generally be true in structures containing rigid frame elements. For further discussion, see Section 2.6 of reference [17].

Past practice in the state of Washington regarding control of superstructure shortening in post-tensioned bridges with rigid piers can be illustrated by a few examples. Single-span bridges have been provided with a hinge at one pier and longitudinal slide bearings at the other pier. Two-span bridges have been detailed with longitudinal slide bearings at the end piers and a monolithic middle pier. On the six-span Evergreen Parkway Undercrossing (Bridge Number 101/510), the center pier (pier 4) was built monolithic with the superstructure, and all the other piers were constructed with slide bearings. After post-tensioning, the bearings at piers 3 and 5 were converted into fixed bearings to help resist large horizontal loads such as earthquakes.

Superstructures which are allowed to move longitudinally at certain piers are typically restrained against motion in the transverse direction at those piers. This can be accomplished with suitable transverse shear corbels or bearings allowing motion parallel to the bridge only. The casting length for box girder bridges shall be slightly longer than the actual bridge layout length to account for the elastic shortening of the concrete due to prestress.

F. Effects of Curved Tendons

AASHTO LRFD Section 5.9.5.4.3 shall be used to consider the effects of curved tendons. In addition, confinement reinforcement shall be provided to confine the PT tendons when R_{in} is less than 800 feet or the effect of in-plane plus out-of-plane forces is greater than or equal to 10 k/ft:

$$\frac{P_u}{R_{in}} + \frac{P_u}{\pi R_{out}} \geq 10 \frac{k}{ft} \qquad \textbf{(5.8.1-1)}$$

Where:

P_u = Factored tendon force = 1.2 P_{jack} (kips)

R_{in} = Radius of curvature of the tendon at the considered location causing in-plane force effects (typically horizontal) (ft)

R_{out} = Radius of curvature of the tendon at the considered location causing out-of-plane force effects (typically vertical) (ft)

Curved tendon confinement reinforcement, when required, shall be as shown in Figure 5.8.1-6. Spacing of the confinement reinforcement shall not exceed either 3.0 times the outside diameter of the duct or 18.0 inches.

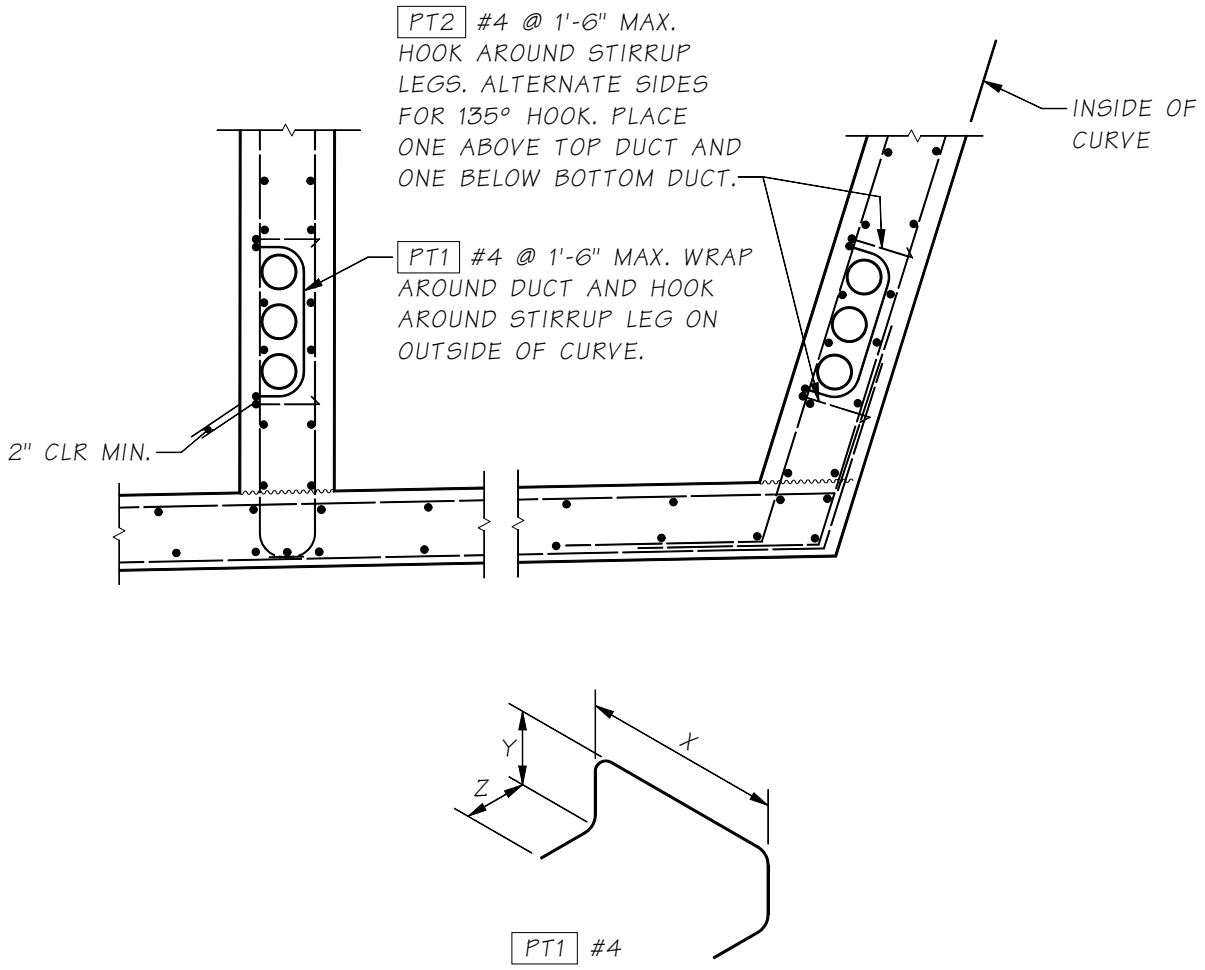

Curved Tendon Confinement Reinforcement
Figure 5.8.1-6

G. Edge Tension Forces

If the centroid of all tendons is located outside of the kern of the section, spalling and longitudinal edge tension forces are induced. Evaluate in accordance with AASHTO LRFD Section 5.8.4.5.4.

5.8.2 Analysis

A. General

The procedures outlined in Section 2.1 through 2.5 of reference [17] for computation of stress in single and multispan box girders can be followed for the analysis of T-beams and slab bridges as well.

The WinBDS program available on the WSDOT system will quickly perform a complete stress analysis of a box girder, T-beam, or slab bridge, provided the structure can be idealized as a plane frame. For further information, see the program user instructions.

STRUDL or CSIBridge is recommended for complex structures which are more accurately idealized as space frames. Examples are bridges with sharp curvature, varying superstructure width, severe skew, or slope-leg intermediate piers. An

analysis method in Chapter 10 of reference[18] for continuous prestressed beams is particularly well adapted to the loading input format in STRUDL. In the method, the forces exerted by cables of parabolic or other configurations are converted into equivalent vertical linear or concentrated loads applied to members and joints of the superstructure. The vertical loads are considered positive when acting up toward the center of tendon curvature and negative when acting down toward the center of tendon curvature. Forces exerted by anchor plates at the cable ends are coded in as axial and vertical concentrated forces combined with a concentrated moment if the anchor plate group is eccentric. Since the prestress force varies along the spans due to the effects of friction, the difference between the external forces applied at the end anchors at opposite ends of the bridge must be coded in at various points along the spans in order for the summation of horizontal forces to equal zero. With correct input, the effects of elastic shortening and secondary moments are properly reflected in all output, and the prestress moments printed out are the actual resultant (total) moments acting on the structure. For examples of the application of STRUDL to post-tensioning design, see the calculations for I-90 West Sunset Way Ramp and the STRUDL/CSI Bridge manuals.

B. Section Properties

As in other types of bridges, the design normally begins with a preliminary estimate of the superstructure cross-section and the amount of prestress needed at points of maximum stress and at points of cross-section change. For box girders, see Figures 2-0 through 2-5 of Reference[17]. For T-beam and slab bridges, previous designs are a useful guide in making a good first choice.

For frame analysis, use the properties of the entire superstructure regardless of the type of bridge being designed. For stress analysis of slab bridges, calculate loads and steel requirements for a 1′ wide strip. For stress analysis of T-beam bridges, use the procedures outlined in the AASHTO *LRFD Specifications*.

Note that when different concrete strengths are used in different portions of the same member, the equivalent section properties shall be calculated in terms of either the stronger or weaker material. In general, the concrete strength shall be limited to the values indicated in Section 5.1.1.

C. Preliminary Stress Check

In accordance with AASHTO, flexural stresses in prestressed members are calculated at service load levels. Shear stresses, stirrups, moment capacities vs. applied moments are calculated at ultimate load levels.

During preliminary design, the first objective should be to satisfy the allowable flexural stresses in the concrete at the critical points in the structure with the chosen cross-section and amount of prestressing steel, then the requirements for shear stress, stirrups, and ultimate moment capacity can be readily met with minor or no modifications in the cross-section. For example, girder webs can be thickened locally near piers to reduce excessive shear stress.

In the AASHTO formulas for allowable tensile stress in concrete, bonded reinforcement should be interpreted to mean bonded auxiliary (nonprestressed) reinforcement in conformity with Article 8.6 of the 2002 ACI *Code for Analysis*

and Design of Reinforced Concrete Bridge Structures. The refined estimate for computing time-dependent losses in steel stress given in the code shall be used. To minimize concrete cracking and protect reinforcing steel against corrosion for bridges, the allowable concrete stress under final conditions in the precompressed tensile zone shall be limited to zero in the top and bottom fibers as shown in Figure 5.8.2-1.

In all cases where tension is allowed in the concrete under initial or final conditions, extra mild steel (auxiliary reinforcement) shall be added to carry the total tension present. This steel can be computed as described in Section 9-5 of Reference[18].

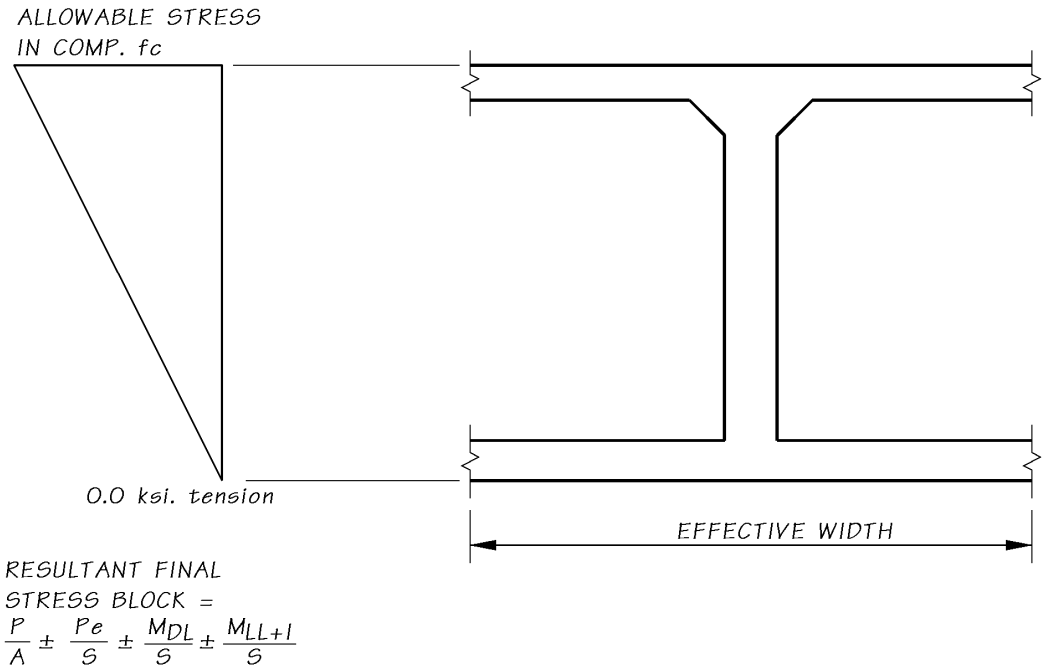

Box Girder Stresses
Figure 5.8.2-1

In case of overstress, try one or more of the following remedies: adjust tendon profiles, add or subtract prestress steel, thicken slabs, revise strength of concrete of top slab, add more short tendons locally, etc.

D. Camber

The camber to be shown on the plans shall include the effect of both dead load and final prestress.

E. Expansion Bearing Offsets

Figure 5.8.1-4 indicates expansion bearing offsets for the partial effects of elastic shortening, creep, and shrinkage. The initial offset shown is intended to result in minimal bearing eccentricity for the majority of the life of the structure. The bearing shall be designed for the full range of anticipated movements: *ES+CR+SH+TEMP* including load factors specified in AASHTO for deflections.

5.8.3 Post-tensioning

A. Tendon Layout

After a preliminary estimate has been made of the concrete section and the amount of prestressing needed at points of maximum applied load, it may be advantageous in multispan bridges to draw a tendon profile to a convenient scale superimposed on a plot of the center of gravity of concrete (c.g.c.) line. The most efficient tendon profile from the standpoint of steel stress loss will normally be a series of rather long interconnected parabolas, but other configurations are possible. For continuous bridges with unequal span lengths, the tendon profile (eccentricity) shall be based on the span requirement. This results in an efficient post-tensioning design. The tendon profile and c.g.c. line plot is strongly recommended for superstructures of variable cross-section and/or multiple unsymmetrical span arrangements, but is not necessary for superstructures having constant cross-section and symmetrical spans. The main advantages of the tendon profile and c.g.c. plot are:

1. The primary prestress moment curves (prestress force times distance from c.g.c. line to center of gravity of steel (c.g.s.) lines) at all points throughout all spans are quickly obtained from this plot and will be used to develop the secondary moment curves (if present) and, ultimately, to develop the resultant total prestress moment curve.
2. Possible conflicts between prestressing steel and mild steel near end regions, crossbeams, and diaphragms may become apparent.
3. Possible design revisions may be indicated. For example, camber in bridges with unequal spans can be balanced by adjusting tendon profiles.

   The tendon profile and c.g.c. line diagram shall also contain a sketch of how the end bearing plates or anchors are to be arranged at the ends of the bridge. Such a sketch can be useful in determining how large the end block in a girder bridge will have to be and how much space will be required for mild steel in the end region. In general, the arrangement of anchor plates should be the same as the arrangement of the ducts to which they belong to avoid problems with duct cross-overs and to keep end blocks of reasonable width.

B. Prestress Losses

Prestress losses shall be as indicated in Section 5.1.4.

C. Jacking End

Effective prestressing force in design of post-tensioned bridges depends on the accumulation of friction losses due to the horizontal and vertical curvature of the tendons as well as the curvature of the bridge. Although jacking ends of post-tensioned bridges is important to achieve more effective design, consideration shall be given to the practicality of jacking during construction. The following general stressing guidelines shall be considered in specifying jacking end of post-tensioned bridges.

- All simple or multiple span CIP or precast concrete bridges with total length of less than 350′ shall be stressed from one end only.
- All CIP or precast concrete post tensioned bridges with total length between 350′ to 600′. may be stressed from one end or both ends if greater friction losses due to vertical or horizontal curvature are justified by the designer.
- All CIP or precast concrete bridges with total length of greater than 600′ shall be stressed from both ends.

When stressing tendons from both ends or when alternating a single pull from both ends (half tendons pulled from one end with the other half pulled from the other end), all tendons shall be stressed on one end before all tendons are stressed on the opposite end.

Stressing at both ends shall preferably be done on alternate tendons, and need not be done simultaneously on the same tendon. In rare cases, tendons can be stressed from both ends to reduce large tendon losses but is undesirable due to worker safety issues and a reduction in stressing redundancy.

D. Steel Stress Curve

Steel stresses may be plotted either as the actual values or as a percentage of the jacking stresses. A steel stress diagram for a typical two-span bridge is shown in Figure 5.8.3-1. Spans are symmetrical about pier 2 and the bridge is jacked from both ends.

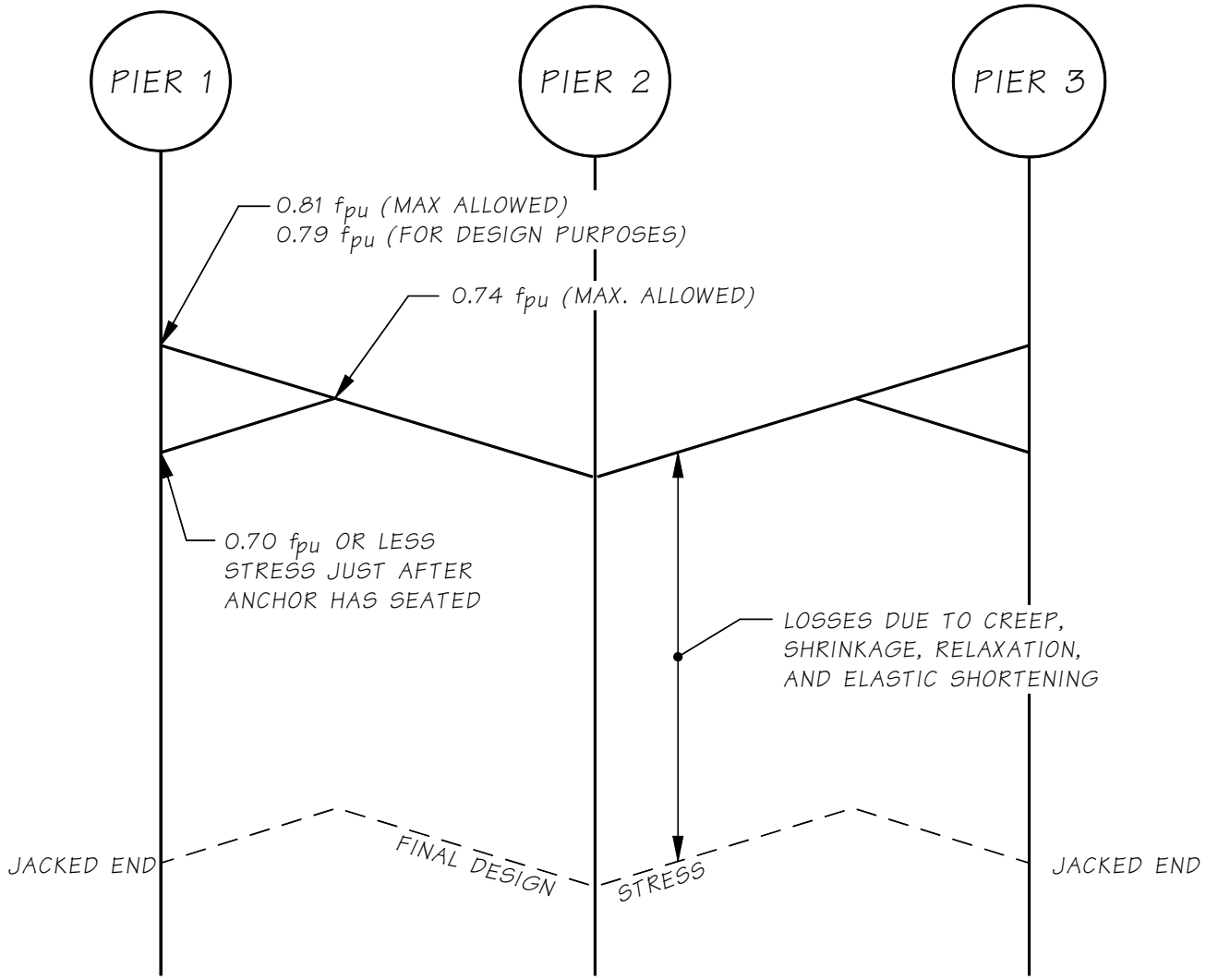

Stress Diagram for a 2-Span PT Bridge
Figure 5.8.3-1

Accurate plotting of steel stress variation due to local curvature is normally not necessary, and straight lines between intersection points on the diagram as shown in Figure 5.8.3-1 are usually sufficient. When tendons are continuous through the length of the bridge, the stress for design purposes at the jacked end should be limited to $0.79f_{pu}$ or 213 ksi for 270 ksi low relaxation strands. This would permit the post-tensioning contractor to jack to the slightly higher value of $0.81f_{pu}$ for low relaxation strands as allowed by the AASHTO *LRFD Specifications* in case friction values encountered in the field turn out somewhat greater than the standard values used in design. Stress loss at jacked end shall be calculated from the assumed anchor set of ⅜″, the normal slippage during anchoring in most systems. At the high points on the initial stress curve, the stress shall not exceed $0.74f_{pu}$ for low relaxation strands after seating of the anchorage. If these values are exceeded, the jacking stress can be lowered or alternately the specified amount of anchor set can be increased.

When the total tendon length (L) is less than the length of cable influenced by anchor set (x) and the friction loss is small, as in short straight tendons, the $0.70 f_{pu}$ value at the anchorage immediately after anchor set governs. In these cases, the allowable jacking stress value at the anchorage cannot be used and a slightly lower value shall be specified.

In single-span, simply supported superstructures friction losses are so small that jacking from both ends is normally not warranted. In the longer multispan bridges where the tendons experience greater friction losses, jacking from both ends will usually be necessary. Jacking at both ends need not be done simultaneously, since final results are virtually the same whether or not the jacking is simultaneous. If unsymmetrical two-span structures are to be jacked from one end only, the jacking must be done from the end of the longest span.

In the absence of experimental data, the friction coefficient for post-tensioning tendons in rigid and semi-rigid galvanized metal sheathing shall be taken as shown in Table 5.8.3-1. For tendon lengths greater than 1,000 feet, investigation is warranted on current field data of similar length bridges for appropriate values of μ. In the absence of experimental data, the friction coefficient for post-tensioning tendons in polyethylene ducts shall be taken as shown in the AASHTO *LRFD Bridge Design Specifications*.

Tendon Length	μ
500 ft or less	0.15
Over 500 ft to 750 ft	0.20
Over 750 ft to 1,000 ft	0.25

Friction Coefficients for Post-tensioning Tendons in Metal Ducts
Table 5.8.3-1

For tendon lengths greater than 1,000 feet, investigation is warranted on current field data of similar length bridges for appropriate values of μ.

E. Flexural Stress in Concrete

Stress at service load levels in the top and bottom fibers of prestressed members shall be checked for at least two conditions that will occur in the lifetime of the members. The initial condition occurs just after the transfer of prestress when the concrete is relatively fresh and the member is carrying its own dead load. The final condition occurs after all the prestress losses when the concrete has gained its full ultimate strength and the member is carrying dead load and live load. For certain bridges, other intermediate loading conditions may have to be checked, such as when prestressing and falsework release are done in stages and when special construction loads have to be carried, etc. The concrete stresses shall be within the AASHTO *LRFD Specification* allowable except as amended in Section 5.2.1.

In single-span simply supported superstructures with parabolic tendon paths, flexural stresses at service load levels need to be investigated at the span midpoint where moments are maximum, at points where the cross-section changes, and near the span ends where shear stress is likely to be maximum (see Section 5.8.4 Shear). For tendon paths other than parabolic, flexural stress shall be investigated at other points in the span as well.

In multispan continuous superstructures, investigate flexural stress at points of maximum moment (in the negative moment region of box girders, check at the quarter point of the crossbeam), at points where the cross section changes, and at points where shear is likely to be maximum. Normally, mild steel should not be used to supplement the ultimate moment capacity. It may be necessary, however, to determine the partial temperature and shrinkage stresses that occur prior to post-tensioning and supply mild steel reinforcing for this condition.

In addition, maximum and minimum steel percentages and cracking moment shall be checked. See Section 2.3.8 of Reference [17].

F. Prestress Moment Curves

1. Single-Span Bridges, Simply Supported

The primary prestress moment curve is developed by multiplying the initial steel stress curve ordinates by the area of prestressing steel times the eccentricity of steel from the center of gravity of the concrete section at every tenth point in the span. The primary prestress moment curve is not necessary for calculating concrete stresses in single-span simply supported bridges. Since there is no secondary prestress moment developed in the span of a single span, simply supported bridge which is free to shorten, the primary prestress moment curve is equal to the total prestress moment curve in the span. However, if the single span is rigidly framed to supporting piers, the effect of elastic shortening shall be calculated. The same would be true when unexpected high friction is developed in bearings during or after construction.

2. Multispan Continuous Bridges

Designers shall take into account the elastic shortening of the superstructure due to prestressing. To obtain the total prestress moment curve used to check concrete stresses, the primary and secondary prestress moment curves must be added algebraically at all points in the spans. As the secondary moment can have a large absolute value in some structures, it is very important to obtain the proper sign for this moment, or a serious error could result.

G. Partial prestressing

Partial prestressing is not allowed in WSDOT bridge designs. However, mild reinforcement could be added to satisfy the ultimate flexural capacity under factored loads if the following requirements are satisfied:

1. Allowable stresses, as specified in this manual for Service-I and Service-III limit states, shall be satisfied with post-tensioning only. The zero-tension policy remains unchanged.
2. Additional mild reinforcement could be used if the ultimate flexural capacity cannot be met with the prestressing provided for service load combinations. The mild reinforcement is filling the gap between the service load and ultimate load requirements. This should be a very small amount of mild reinforcement since adequate post-tensioning is already provided to satisfy the service load requirement for dead load and live loads.

3. If mild reinforcement is added, the resistance factor for flexural design shall be adjusted in accordance with AASHTO LRFD Section 5.5.4.2 to account for the effect of partial prestressing. The section will still be considered uncracked and requirements for crack control, and side skin reinforcement do not apply.

5.8.4 Shear and Anchorages

A. Shear Capacity

Concrete box girder and T-beam bridges with horizontal construction joints (which result from webs and slabs being cast at different times) shall be checked for both vertical and horizontal shear capacity. Generally, horizontal shear requirements will control the stirrup design.

Vertical concrete shear capacity for prestressed or post-tensioned structural members is calculated in accordance with AASHTO LRFD Section 5.7.3. Minimum stirrup area and maximum stirrup spacing are subject to the limitations presented in AASHTO LRFD Sections 5.7.2.5 and 5.7.2.6. For further explanation, refer to Section 11.4 of the ACI 318-02 *Building Code Requirements for Reinforced Concrete and Commentary*. Chapter 27 of Notes on ACI 318-02 Building Code Requirements for Reinforced Concrete with Design Applications presents two excellent example problems for vertical shear design.

B. Horizontal Shear

Horizontal shear stress acts over the contact area between two interconnected surfaces of a composite structural member. AASHTO LRFD Section 5.7.4 shall be used for shear-friction design.

C. End Block Stresses

The highly concentrated forces at the end anchorages cause bursting and spalling stresses in the concrete which must be resisted by reinforcement. For a better understanding of this subject, see Chapter 7 of Reference[18 and 19], and Section 2.82 of Reference[17].

Note that the procedures for computing horizontal bursting and spalling steel in the slabs of box girders and T-beams are similar to those required for computing vertical steel in girder webs, except that the slab steel is figured in a horizontal instead of a vertical plane. In box girders, this slab steel should be placed half in the top slab and half in the bottom slab. The anchorage zones of slab bridges will require vertical stirrups as well as additional horizontal transverse bars extending across the width of the bridge. The horizontal spalling and bursting steel in slab bridges shall be placed half in a top layer and half in a bottom layer.

D. Anchorage Stresses

The average bearing stress on the concrete behind the anchor plate and the bending stress in the plate material shall satisfy the requirements of the AASHTO LRFD Specification. In all sizes up to the 31-strand tendons, the square anchor plates used by three suppliers (DSI, VSL, AVAR, Stronghold) meet the AASHTO requirements, and detailing end blocks to accommodate these plates is the recommended procedure. In the cases where nonstandard (rectangular) anchor plates must be specified because of space limitations, assume that the trumpet

associated with the equivalent size square plate will be used. In order to calculate the net bearing plate area pressing on the concrete behind it, the trumpet size can be scaled from photos in supplier brochures. Assume for simplicity that the concrete bearing stress is uniform. Bending stress in the steel should be checked assuming bending can occur across a corner of the plate or across a line parallel to its narrow edge. See Appendix 5-B2 for preapproved anchorages for post-tensioning.

E. Anchorage Plate Design

The design and detailing of the anchorage block in CIP post-tensioned box girders should be based on Normal Anchorage Devices as defined in *Standard Specifications* Section 6-02.3(26)C. Special Anchorage Devices as defined in *Standard Specifications* Section 6-02.3(26)D could be used if stacking of Normal Anchorage Devices within the depth of girder is geometrically not possible. Anchorage plates shall not extend to top and bottom slab of box girders. If Special Anchorage Devices are used, they shall be specified in the contract plans and bridge special provisions.

5.8.5 Temperature Effects

Most specifications for massive bridges call for a verification of stresses under uniform temperature changes of the total bridge superstructure. Stresses due to temperature unevenly distributed within the cross-section are not generally verified. In reality, however, considerable temperature gradients are set up within the cross-section of superstructures. Such temperature differences are mostly of a very complex nature, depending on the type of cross-section and direction of solar radiation [20].

Solar radiation produces uniform heating of the upper surface of a bridge superstructure which is greater than that of the lower surface. An inverse temperature gradient with higher temperatures at the lower surface occurs rarely and involves much smaller temperature differences. In statically indeterminate continuous bridge beams, a temperature rise at the upper surface produces positive flexural moments which cause tensile stresses in the bottom fibers. When the temperature gradient is constant over the entire length of a continuous beam superstructure, positive flexural moments are induced in all spans. These moments are of equal constant magnitude in the interior spans and decrease linearly to zero in the end spans. The most critical zones are those which have the lowest compressive stress reserve in the bottom fibers under prestress plus dead load. Normally, these are the zones near the interior supports where additional tensile stresses develop in the bottom fibers due to

- A concentrated support reaction, and
- Insufficient curvature of prestressed reinforcement.

Studies have shown that temperature is the most important tension-producing factor, especially in two-span continuous beams in the vicinity of intermediate supports, even when the temperature difference is only 10°C between the deck and bottom of the beam. In practice, a box girder can exhibit a ΔT=30°C. The zone at a distance of about 0.3 to 2.0d on either side of the intermediate support proved to be particularly crack-prone.

Computation of stresses induced by vertical temperature gradients within prestressed concrete bridges can become quite complex and are ignored in typical designs done by WSDOT. It is assumed that movements at the expansion devices will generally relieve any induced stresses. However, such stresses can be substantial in massive, deep bridge members in localities with large temperature fluctuations. If the structure being designed falls within this category, a thermal stress investigation shall be considered. See Reference[17] and the following temperature criteria for further guidance.

1. A mean temperature 50°F with rise 45°F and fall 45°F for longitudinal analysis using one-half of the modulus of elasticity. (Maximum Seasonal Variation.)
2. The superstructure box girder shall be designed transversely for a temperature differential between inside and outside surfaces of ±15°F with no reduction in modulus of elasticity (Maximum Daily Variation).
3. The superstructure box girder shall be designed longitudinally for a top slab temperature increase of 20°F with no reduction in modulus of elasticity. (In accordance with *Post-tensioning Institute Manual, Precast Segmental Box Girder Bridge Manual* Section 3.3.4.)

5.8.6 Construction

A. General

Construction plans for conventional post-tensioned box girder bridges include two different sets of drawings. The first set (contract plans) is prepared by the design engineer and the second set (shop plans) is prepared by the post-tensioning materials supplier (contractor).

B. Contract Plans

The contract plans shall be prepared to accommodate several post-tensioning systems, so only prestressing forces and eccentricity should be detailed. The concrete sections shall be detailed so that available systems can be installed. Design the thickness of webs and flanges to facilitate concrete placement. Generally, web thickness for post-tensioned bridges shall be as described in Section 5.8.1.B. See Section 5.8.7 for design information to be included in the contract plan post-tensioning notes.

C. Shop Plans

The shop plans are used to detail, install, and stress the post-tensioning system selected by the Contractor. These plans must contain sufficient information to allow the engineer to check their compliance with the contract plans. These plans must also contain the location of anchorages, stressing data, and arrangement of tendons.

D. Review of Shop Plans for Post-tensioned Girder

Post-tensioning shop drawings shall be reviewed by the designer (or Bridge Technical Advisor for non-Bridge Office projects) and consulted with the Concrete Specialist if needed. Review of shop drawing shall include:

1. All post-tensioning strands shall be of ½″ or 0.6″ diameter grade 270 low relaxation uncoated strands.
2. Tendon profile and tendon placement patterns.

3. Duct size shall be based on the duct area at least 2.5 times the total area of prestressing strands.
4. Anchor set shall conform to the contract plans. The post-tensioning design is typically based on an anchor set of ⅜″.
5. Maximum number of strands per tendon shall not exceed (37) ½″ diameter strands or (27) 0.6″ diameter strands in accordance with *Standard Specifications* Section 6-02.3(26)F.
6. Jacking force per web.
7. Prestress force after anchor set (lift-off force).
8. Number of strands per web.
9. Anchorage system shall conform to *Standard Specifications* Section 6-02.3(26) B to D. The anchorage assembly dimensions and reinforcement detailing shall conform to the corresponding post-tensioning catalog.
10. The curvature friction coefficient and wobble friction coefficient. The curvature friction coefficient shall be in accordance with Section 5.8.3.D. The wobble friction coefficient of k = 0.0002/ft is often used. These coefficients may be revised by the post-tensioning supplier if approved by the design engineer and conform to the *Standard Specifications* Section 6.02.3(26)G.
11. Post-tensioning stressing sequence.
12. Tendon stresses shall not exceed the following limits for low relaxation strands as specified in Section 5.8.3.D:
    1. $0.81f_{pu}$ at anchor ends immediately before seating.
    2. $0.70f_{pu}$ at anchor ends immediately after seating.
    3. $0.74f_{pu}$ at the end point of length influenced by anchor set.
13. Elongation calculations for each jacking operation shall be verified. If the difference in tendon elongation exceeds 2 percent, the elongation calculations shall be separated for each tendon in accordance with *Standard Specifications* Section 6-02.3(26)A.
14. Vent points shall be provided at all high points along tendon in accordance with *Standard Specifications* Section 6-02.3(26)E4.
15. Drain holes shall be provided at all low points along tendon in accordance with *Standard Specifications* Section 6-02.3(26)E4.
16. The concrete strength at the time of post-tensioning, f'_{ci} shall not be less than 4,000 psi or the strength specified in the plans in accordance with *Standard Specifications* Section 6-02.3(26)G. Different concrete strength may be used if specified in the contract plans.
17. Concrete stresses at the anchorage shall be checked in accordance with *Standard Specifications* Section 6-02.3(26)C for normal anchorage devices. For special anchorage devices, if not covered in the Appendix 5-B2 for pre-approved list of post-tensioning system, testing in accordance with *Standard Specifications* Section 6-02.3(26)D is required.

E. During Construction

1. If the measured elongation of each strand tendon is within ± 7 percent of the approved calculated elongation, the stressed tendon is acceptable.
2. If the measured elongation is greater than 7 percent, force verification after seating (lift-off force) is required. The lift-off force shall not be less than 99 percent of the approved calculated force nor more than 70% $f_{pu}\, A_s$.
3. If the measured elongation is less than 7 percent, the bridge construction office will instruct the force verification.
4. One broken strand per tendon is usually acceptable. (Post-tensioning design shall preferably allow one broken strand). If more than one strand per tendon is broken, the group of tendon per web should be considered. If the group of tendons in a web is under-stressed, then the adequacy of the entire structure shall be investigated by the designer and consulted with the Bridge Construction Office.
5. Failed anchorage is usually taken care of by the Bridge Construction Office.
6. Over or under elongation is usually taken care of by the Bridge Construction Office.
7. In case of low concrete strength the design engineer shall investigate the adequacy of design with lower strength.
8. Other problems such as unbalanced and out of sequence post-tensioning, strands surface condition, strand subjected to corrosion and exposure, delayed post-tensioning due to mechanical problems, jack calibration, etc. should be evaluated on a case-by-case basis and are usually taken care by Bridge Construction Office.

5.8.7 Post-tensioning Notes — Cast-in-place Girders

A. General

The design plans shall contain the following information for use by the post-tensioned and state inspector:

1. Tendon jacking sequence,
2. Friction coefficients
3. Duct type
4. Elastic and time-dependent losses
5. Anchor set
6. Prestress forces
7. Falsework construction and removal
8. Minimum number of strands, if required for ultimate moment capacity

If jacking is done at both ends of the bridge, the minimum strand elongation due to the specified jacking load for the end jacked first as well as the end jacked last shall be indicated. The calculated strand elongations at the ends of the bridge are compared with the measured field values to ensure that the friction coefficients (and hence the levels of prestressing throughout the structure) agree with the values assumed by the designer.

The tendons shall be jacked in a sequence that avoids causing overstress or tension in the bridge.

The standard post-tensioning notes for the sequence of stressing of longitudinal tendons shall be shown in the Contract Plans.

5.9 Spliced Prestressed Concrete Girders

5.9.1 Definitions

The provisions herein apply to precast girders fabricated in segments that are spliced longitudinally to form the girders in the final structure. The cross-section for this type of bridge is typically composed of bulb tee girders or trapezoidal tub girders with a composite CIP deck. WSDOT standard drawings for spliced I-girders are as shown on the Bridge Standard Drawings website (www.wsdot.wa.gov/Bridge/Structures/StandardDrawings.htm). Span capabilities of spliced prestressed concrete girders are shown in Appendices 5.6-A1-8 for girders and 5.6-A1-9 for trapezoidal tub girders.

Prestressed concrete deck bulb tee girder bridges may also be fabricated in segments and spliced longitudinally. Splicing in this type of girder may be beneficial because the significant weight of the cross-section may exceed usual limits for handling and transportation. Spliced structures of this type, which have longitudinal joints in the deck between each deck girder, shall comply with the additional requirements of AASHTO LRFD Section 5.12.2.3.

Spliced prestressed concrete girder bridges may be distinguished from what is referred to as "segmental construction" in bridge specifications by several features which typically include:

- The lengths of some or all segments in a bridge are a significant fraction of the span length rather than having a number of segments in each span.
- Design of joints between girder segments at the service limit state does not typically govern the design for the entire length of the bridge for either construction or for the completed structure.
- Wet-cast closure joints are usually used to join girder segments rather than match-cast joints.
- The bridge cross-section is composed of girders with a CIP concrete composite deck rather than precasting the full width and depth of the superstructure as one piece. In some cases, the deck may be integrally cast with each girder. Connecting the girders across the longitudinal joints completes a bridge of this type.
- Girder sections are used, such as bulb tee, deck bulb tee or tub girders, rather than closed cell boxes with wide monolithic flanges.
- Provisional ducts are required for segmental construction to provide for possible adjustment of prestress force during construction. Similar requirements are not given for spliced prestressed concrete girder bridges because of the redundancy provided by a greater number of webs and tendons, and typically lower friction losses because of fewer joint locations.
- The method of construction and any required temporary support is of paramount importance in the design of spliced prestressed concrete girder bridges. Such considerations often govern final conditions in the selection of section dimensions and reinforcing and/or prestressing.

All supports required prior to the splicing of the girder shall be shown on the contract documents, including elevations and reactions. The stage of construction during which the temporary supports are removed shall also be shown on the contract documents. Stresses due to changes in the structural system, in particular the effects of the

application of load to one structural system and its removal from a different structural system, shall be accounted for. Redistribution of such stresses by creep shall be taken into account and allowance shall be made for possible variations in the creep rate and magnitude.

Prestress losses in spliced prestressed concrete girder bridges shall be estimated using the provisions of Section 5.1.4. The effects of combined pretensioning and post-tensioning and staged post-tensioning shall be considered. When required, the effects of creep and shrinkage in spliced prestressed concrete girder bridges shall be estimated using the provisions of Section 5.1.1.

5.9.2 WSDOT Criteria for Use of Spliced Girders

See Section 5.6.3.D.3 for criteria on providing an alternate spliced-girder design for long span one-piece pre-tensioned girders.

5.9.3 Girder Segment Design

A. Design Considerations

Stress limits for temporary concrete stresses in girder segments before losses and stress limits for concrete stresses in girder segments at the service limit state after losses specified in Section 5.2.1.C shall apply at each stage of pretensioning or post-tensioning with due consideration for all applicable loads during construction. The concrete strength at the time the stage of prestressing is applied shall be substituted for f'_{ci} in the stress limits.

The designer shall consider requirements for bracing of the girder segments once they have been erected on the substructure. Any requirements for temporary or permanent bracing during subsequent stages of construction, along with the contractor's responsibilities for designing and placing them, shall be specified in the contract documents.

Effects of curved tendons shall be considered in accordance with Section 5.8.1.F.

B. Post-tensioning

Post-tensioning may be applied either before and/or after placement of bridge deck concrete. Part of the post-tensioning may be applied prior to placement of the deck concrete, with the remainder placed after deck concrete placement. In the case of multi-stage post-tensioning, ducts for tendons to be tensioned before the deck concrete shall not be located in the deck.

All post-tensioning tendons shall be fully grouted after stressing. Prior to grouting of post-tensioning ducts, gross cross-section properties shall be reduced by deducting the area of ducts and void areas around tendon couplers.

Where some or all post-tensioning is applied after the bridge deck concrete is placed, fewer post-tensioning tendons and a lower concrete strength in the closure joint may be required. However, deck replacement, if necessary, is difficult to accommodate with this construction sequence. Where all of the post-tensioning is applied before the deck concrete is placed, a greater number of post-tensioning tendons and a higher concrete strength in the closure joint may be required. However, in this case, the deck can be replaced if necessary.

5.9.4 Joints Between Segments

A. General

Cast-in-place closure joints are typically used in spliced girder construction. The sequence of placing concrete for the closure joints and bridge deck shall be specified in the contract documents. Match-cast joints shall not be specified for spliced girder bridges unless approved by the Bridge Design Engineer. Prestress, dead load, and creep effects may cause rotation of the faces of the match-cast joints prior to splicing. If match cast joint is specified, the procedures for splicing the girder segments that overcome this rotation to close the match-cast joint shall be shown on the contract plans.

B. Location of Closure Joints

The location of intermediate diaphragms shall be offset by at least 2′-0″ from the edge of cast-in-place closure joints.

In horizontally curved spliced girder bridges, intermediate diaphragms could be located at the CIP closure joints if straight segments are spliced with deflection points at closures. In this case, the diaphragm could be extended beyond the face of the exterior girder for improved development of diaphragm reinforcement.

The final configuration of the closures shall be coordinated with the State Bridge and Structures Architect on all highly visible bridges, such as bridges over vehicular or pedestrian traffic.

C. Details of Closure Joints

The length of a closure joint between concrete segments shall allow for the splicing of steel whose continuity is required by design considerations and the accommodation of the splicing of post-tensioning ducts. The length of a closure joint shall not be less than 2′-0″. A longer closure joint may be used to provide more room to accommodate tolerances for potential misalignment of ducts within girder segments and misalignment of girder segments at erection.

Web reinforcement within the joint shall be the larger of that in the adjacent girders. The face of the segments at closure joints shall be specified as intentionally roughened surface.

Concrete cover to web stirrups at the CIP closures of pier diaphragms shall not be less than 2½″. If intermediate diaphragm locations coincide with CIP closures between segments, then the concrete cover at the CIP closures shall not be less than 2½″. This increase in concrete cover is not necessary if intermediate diaphragm locations are away from the CIP closures. See Figures 5.9.4-1 to 5.9.4-3 for details of closure joints.

Adequate reinforcement shall be provided to confine tendons at CIP closures and at intermediate pier diaphragms. The reinforcement shall be proportioned to ensure that the steel stress during the jacking operation does not exceed $0.6f_y$.

The clear spacing between ducts at CIP closures of pier diaphragms shall be 2.0″ minimum. The duct diameter for WSDOT standard spliced girders shall not exceed 4.0″ for spliced I-girders and 4½″ for spliced tub girders.

On the construction sequence sheet indicate that the side forms at the CIP closures and intermediate pier diaphragms shall be removed to inspect for concrete consolidation prior to post-tensioning and grouting.

Self-consolidating concrete (SCC) may be used for CIP closures.

D. Joint Design

Stress limits for temporary concrete stresses in joints before losses specified in Section 5.2.1.C shall apply at each stage of post-tensioning. The concrete strength at the time the stage of post-tensioning is applied shall be substituted for f'_{ci} in the stress limits.

Stress limits for concrete stresses in joints at the service limit state after losses specified in Section 5.2.1.C shall apply. These stress limits shall also apply for intermediate load stages, with the concrete strength at the time of loading substituted for f'_c in the stress limits. The compressive strength of the closure joint concrete at a specified age shall be compatible with design stress limitations.

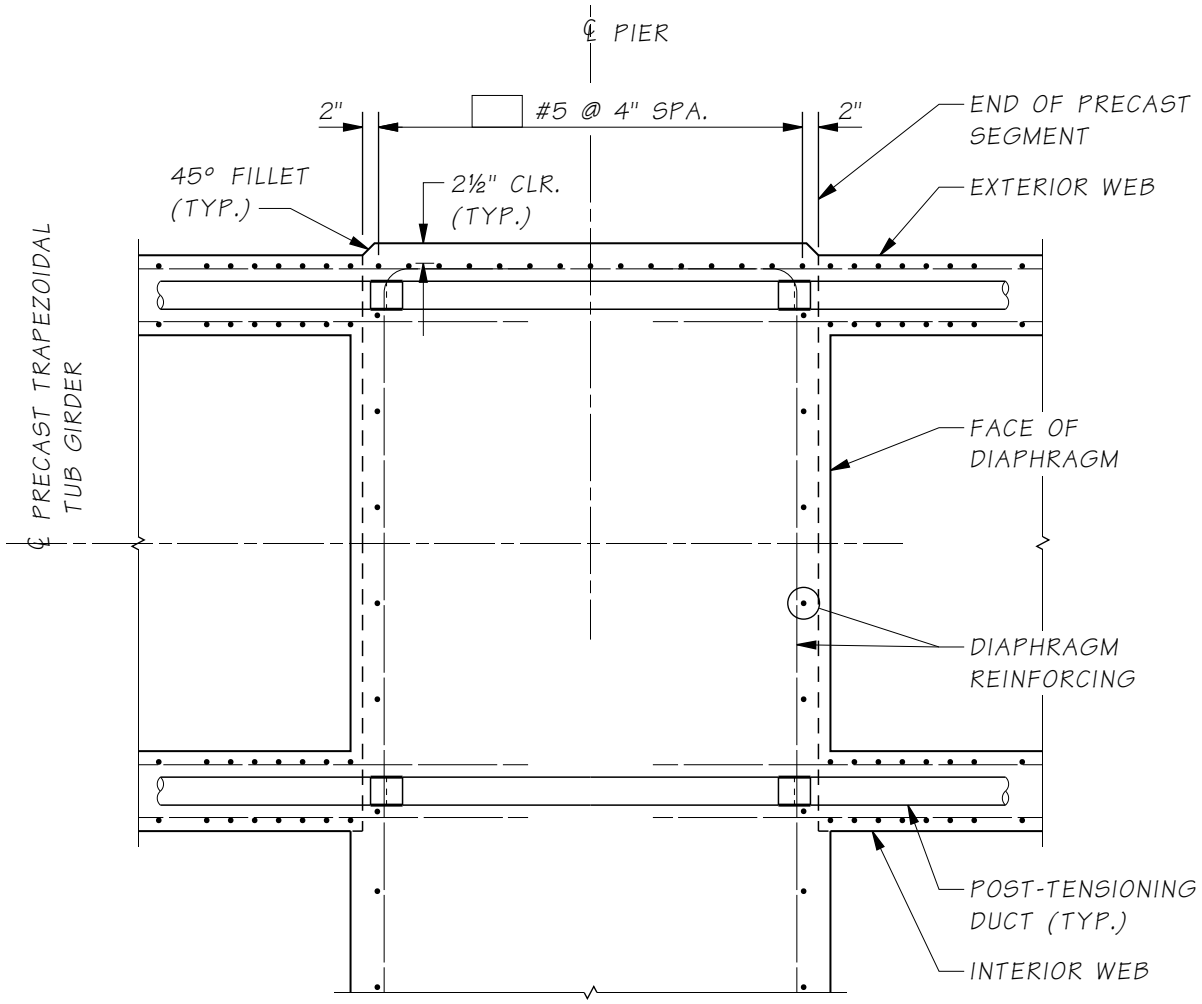

CIP Closure at Pier Diaphragm
Figure 5.9.4-1

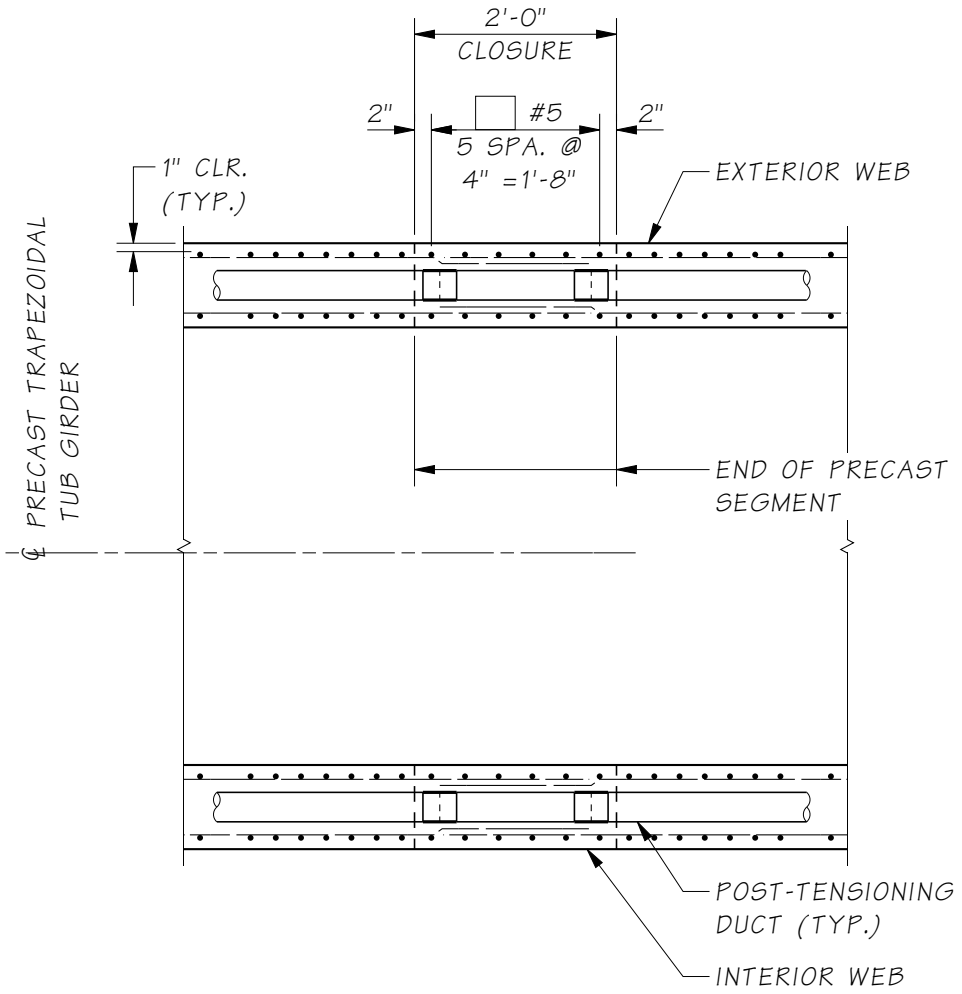

CIP Closure Away from Intermediate Diaphragm
Figure 5.9.4-2

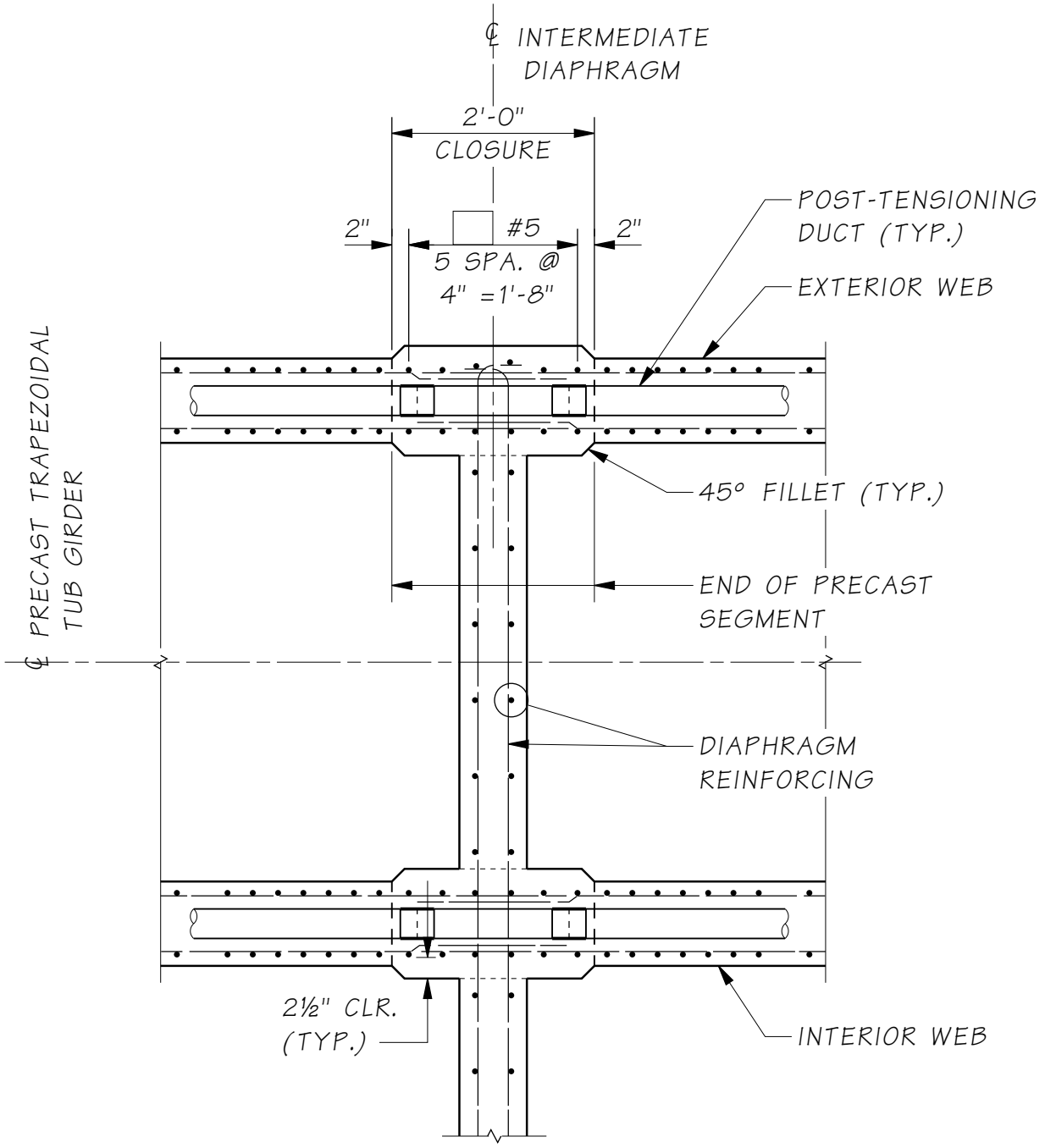

CIP Closure at Intermediate Diaphragm
Figure 5.9.4-3

5.9.5 Review of Shop Plans for Spliced Prestressed Concrete Girders

Shop drawings for spliced prestressed concrete girders shall be reviewed by the designer (or Bridge Technical Advisor for non-Bridge Office projects) and consulted with the Concrete Specialist if needed. Review of shop drawing shall include:

1. All prestressing strands shall be of ½″ or 0.6″ diameter grade 270 low relaxation uncoated strands.
2. Number of strands per segment.
3. Pretensioning strands jacking stresses shall not exceed $0.75f_{pu}$.
4. Strand placement patterns.
5. Temporary strand placement patterns, location and size of blockouts for cutting strands.
6. Procedure for cutting temporary strands and patching the blockouts shall be specified.
7. Number and length of extended strands and rebars at girder ends.
8. Location of holes and shear keys for intermediate and end diaphragms.
9. Location and size of bearing recesses.
10. Saw tooth at girder ends.
11. Location and size of lifting loops or lifting bars.
12. Number and size of horizontal and vertical reinforcement.
13. Segment length and end skew.
14. Tendon profile and tendon placement pattern.
15. Duct size shall be based on the duct area at least 2.5 times the total area of prestressing strands.
16. Anchor set. The post-tensioning design is typically based on an anchor set of ⅜″.
17. Maximum number of strands per tendon shall not exceed (37) ½″ diameter strands or (27) 0.6″ diameter strands per *Standard Specifications* Section 6-02.3(26)F.
18. Jacking force per girder.
19. Prestress force after anchor set (lift-off force).
20. Number of strands per web.
21. Anchorage system shall conform to pre-approved list of post-tensioning system per Appendix 5-B4. The anchorage assembly dimensions and reinforcement detailing shall conform to the corresponding post-tensioning catalog.

22. The curvature friction coefficient and wobble friction coefficient. The curvature friction coefficient of μ= 0.15 for bridges less than 400 feet, μ= 0.2 for bridges between 400 feet and 800 feet, and μ= 0.25 for bridges longer than 800 feet. The wobble friction coefficient of k = 0.0002/ft is often used. These coefficients may be revised by the post-tensioning supplier if approved by the design engineer and conform to the *Standard Specifications* Section 6.02.3(26)G.
23. Post-tensioning stressing sequence.
24. Tendon stresses shall not exceed the following limits for low relaxation strands as specified in Section 5.8.3.D:
    $0.81f_{pu}$ at anchor ends immediately before seating.
    $0.70f_{pu}$ at anchor ends immediately after seating.
    $0.74f_{pu}$ at the end point of length influenced by anchor set.
25. Elongation calculations for each jacking operation shall be verified. If the difference in tendon elongation exceeds 2 percent, the elongation calculations shall be separated for each tendon in accordance with *Standard Specifications* Section 6-02.3(26)A.
26. Vent points shall be provided at all high points along tendon.
27. Drain holes shall be provided at all low points along tendon.
28. The concrete strength at the time of post-tensioning, f'_{ci} shall not be less than 4,000 psi in accordance with *Standard Specifications* Section 6-02.3(26)G. Different concrete strength may be used if specified in the contract plans.
29. Concrete stresses at the anchorage shall be checked in accordance with *Standard Specifications* Section 6-02.3(26)C for bearing type anchorage. For other type of anchorage assemblies, if not covered in the Appendix 5-B2 for pre-approved list of post-tensioning system, testing in accordance with *Standard Specifications* Section 6-02.3(26)D is required.
30. Concrete stresses at CIP closures shall conform to allowable stresses of Table 5.2.1-1.

5.9.6 Post-tensioning Notes — Spliced Prestressed Concrete Girders

1. The CIP concrete in the bridge deck shall be Class 4000D. The minimum compressive strength of the CIP concrete at the wet joint at the time of post-tensioning shall be xxx ksi.
2. The minimum prestressing load after seating and the minimum number of prestressing strands for each girder shall be as shown in post-tensioning table.
3. The design is based on xxx inch diameter low relaxation strands with a jacking load for each girder as shown in post-tensioning table, an anchor set of ⅜″ a curvature friction coefficient, μ= 0.20 and a wobble friction coefficient,k = 0.0002/feet. The actual anchor set used by the contractor shall be specified in the shop plans and included in the transfer force calculations.
4. The design is based on the estimated prestress loss of post-tensioned prestressing strands as shown in post-tensioning table due to steel relaxation, elastic shortening, creep and shrinkage of concrete.

5. The contractor shall submit the stressing sequence and elongation calculations to the engineer for approval. All losses due to tendon vertical and horizontal curvature must be included in elongation calculations. The stressing sequence shall meet the following criteria:

   A. The prestressing force shall be distributed with an approximately equal amount in each web and shall be placed symmetrically about the centerline of the bridge.

   B. No more than one-half of the prestressing force in any web may be stressed before an equal force is stressed in the adjacent webs. At no time during stressing operation will more than one-sixth of the total prestressing force is applied eccentrically about the centerline of bridge.

6. The maximum outside diameter of the duct shall be xxx inches. The area of the duct shall be at least 2.5 times the net area of the prestressing steel in the duct.

7. All tendons shall be stressed from pier number xxx.

5.10 Bridge Standard Drawings

Girder Sections

5.6-A1-10 Prestressed Concrete I and WF Girders

5.6-A1-11 Prestressed Concrete Deck Girders

5.6-A1-12 Spliced Prestressed Concrete Girders

5.6-A1-13 Prestressed Concrete Tub Girders

Superstructure Construction Sequences

5.6-A2-1 Single Span Prestressed Girder Construction Sequence

5.6-A2-2 Multiple Span Prestressed Girder Construction Sequence

5.6-A2-3 Raised Crossbeam Prestressed Girder Construction Sequence

W Girders

5.6-A3-1 W42G Girder Details 1 of 2

5.6-A3-2 W42G Girder Details 2 of 2

5.6-A3-3 W50G Girder Details 1 of 2

5.6-A3-4 W50G Girder Details 2 of 2

5.6-A3-5 W58G Girder Details 1 of 3

5.6-A3-6 W58G Girder Details 2 of 3

5.6-A3-7 W58G Girder Details 3 of 3

5.6-A3-8 W74G Girder Details 1 of 3

5.6-A3-9 W74G Girder Details 2 of 3

5.6-A3-10 W74G Girder Details 3 of 3

WF Girders

5.6-A4-1 WF Girder Details 1 of 5

5.6-A4-2 WF Girder Details 2 of 5

5.6-A4-3 WF Girder Details 3 of 5

5.6-A4-4 WF Girder Details 4 of 5

5.6-A4-5 WF Girder Details 5 of 5

5.6-A4-6 Additional Extended Strands

5.6-A4-7 End Diaphragm Details

5.6-A4-8 L Abutment End Diaphragm Details

5.6-A4-9 Diaphragm at Intermediate Pier Details

5.6-A4-10 Partial Depth Intermediate Diaphragm Details

5.6-A4-11 Full Depth Intermediate Diaphragm Details

5.6-A4-12 I Girder Bearing Details

Wide Flange Thin Deck Girders

5.6-A5-1 WF Thin Deck Girder Details 1 of 5
5.6-A5-2 WF Thin Deck Girder Details 2 of 5
5.6-A5-3 WF Thin Deck Girder Details 3 of 5
5.6-A5-4 WF Thin Deck Girder Details 4 of 5
5.6-A5-5 WF Thin Deck Girder Details 5 of 5
5.6-A5-6 WF Thin Deck Girder End Diaphragm Details
5.6-A5-7 WF Thin Deck Girder L Abutment End Diaphragm Details
5.6-A5-8 WF Thin Deck Girder Diaphragm at Intermediate Pier Details
5.6-A5-9 WF Thin Deck Girder Partial Depth Intermed. Diaphragm
5.6-A5-10 WF Thin Deck Girder Full Depth Intermediate Diaphragm

Wide Flange Deck Girders

5.6-A6-1 WF Deck Girder Details 1 of 4
5.6-A6-2 WF Deck Girder Details 2 of 4
5.6-A6-3 WF Deck Girder Details 3 of 4
5.6-A6-4 WF Deck Girder Details 4 of 4
5.6-A6-5 WF Deck Girder End Diaphragm Details
5.6-A6-6 WF Deck Girder L Abutment End Diaphragm Details
5.6-A6-7 WF Deck Girder Diaphragm at Intermediate Pier Details
5.6-A6-8 WF Deck Girder Full Depth Intermediate Diaphragm

Deck Bulb Tee Girders

5.6-A7-1 Deck Bulb Tee Girder Schedule
5.6-A7-2 Deck Bulb Tee Girder Details 1 of 2
5.6-A7-3 Deck Bulb Tee Girder Details 2 of 2

Slabs

5.6-A8-1 Slab Girder Details 1 of 3
5.6-A8-2 Slab Girder Details 2 of 3
5.6-A8-3 Slab Girder Details 3 of 3
5.6-A8-5 Slab Girder Fixed Diaphragm
5.6-A8-6 Slab Girder End Diaphragm

Tub Girders

5.6-A9-1 Tub Girder Schedule and Notes
5.6-A9-2 Tub Girder Details 1 of 3
5.6-A9-3 Tub Girder Details 2 of 3
5.6-A9-4 Tub Girder Details 3 of 3
5.6-A9-5 Tub Girder End Diaphragm on Girder Details
5.6-A9-6 Tub Girder Raised Crossbeam Details
5.6-A9-7 Tub S-I-P Deck Panel Girder – End Diaphragm on Girder Details
5.6-A9-8 Tub S-I-P Deck Panel Girder – Raised Crossbeam Details
5.6-A9-9 Tub Girder Bearing Details

Stay-In-Place Deck Panel

5.6-A10-1 Stay-In-Place (SIP) Deck Panel Details

Post Tensioned Spliced Girders

5.9-A1-1 WF74PTG Spliced Girder Details 1 of 5
5.9-A1-2 WF74PTG Spliced Girder Details 2 of 5
5.9-A1-3 Spliced Girder Details 3 of 5
5.9-A1-4 WF74PTG Girder Details 4 of 5
5.9-A1-5 Spliced Girder Details 5 of 5
5.9-A2-1 WF83PTG Spliced Girder Details 1 of 5
5.9-A2-2 WF83PTG Spliced Girder Details 2 of 5
5.9-A2-4 WF83PTG Spliced Girder Details 4 of 5
5.9-A3-1 WF95PTG Spliced Girder Details 1 of 5
5.9-A3-2 WF95PTG Spliced Girder Details 2 of 5
5.9-A3-4 WF95PTG Spliced Girder Details 4 of 5
5.9-A4-1 Trapezoidal Tub Girder Bearing Details
5.9-A4-2 Tub Spliced Girder Details 1 of 5
5.9-A4-3 Tub Spliced Girder Details 2 of 5
5.9-A4-4 Tub Spliced Girder Details 3 of 5
5.9-A4-5 Tub Spliced Girder Details 4 of 5
5.9-A4-6 Tub Spliced Girder Details 5 of 5
5.9-A4-7 Tub Spliced Girder End Diaphragm on Girder Details
5.9-A4-8 Tub Spliced Girder Raised Crossbeam Details

5.9-A5-1 P.T. Trapezoidal Tub S-I-P Deck Panel Spliced Girder Details 1 of 5
5.9-A5-2 P.T. Trapezoidal Tub S-I-P Deck Panel Spliced Girder – Details 2 of 5
5.9-A5-3 P.T. Trapezoidal Tub S-I-P Deck Panel Spliced Girder – Details 3 of 5
5.9-A5-4 P.T. Trapezoidal Tub S-I-P Deck Panel Spliced Girder – Details 4 of 5
5.9-A5-5 P.T. Trapezoidal Tub S-I-P Deck Panel Spliced Girder – Details 5 of 5
5.9-A5-6 Trapezoidal Tub S-I-P Deck Panel Girder – End Diaphragm on Girder Details
5.9-A5-7 Trapezoidal Tub S-I-P Deck Panel Girder – Raised Crossbeam Details

5.11 Appendices

Appendix 5.1-A1	Standard Hooks
Appendix 5.1-A2	Minimum Reinforcement Clearance and Spacing for Beams and Columns
Appendix 5.1-A3	Reinforcing Bar Properties
Appendix 5.1-A4	Tension Development Length of Deformed Bars
Appendix 5.1-A5	Compression Development Length and Minimum Lap Splice of Grade 60 Bars
Appendix 5.1-A6	Tension Development Length of 90º and 180º Standard Hooks
Appendix 5.1-A7	Tension Lap Splice Lengths of Grade 60 Bars – Class B
Appendix 5.1-A8	Prestressing Strand Properties and Development Length
Appendix 5.2-A1	Working Stress Design
Appendix 5.2-A2	Working Stress Design
Appendix 5.2-A3	Working Stress Design
Appendix 5.3-A1	Positive Moment Reinforcement
Appendix 5.3-A2	Negative Moment Reinforcement
Appendix 5.3-A3	Adjusted Negative Moment Case I (Design for M at Face of Support)
Appendix 5.3-A4	Adjusted Negative Moment Case II (Design for M at ¼ Point)
Appendix 5.3-A5	Cast-In-Place Deck Slab Design for Positive Moment Regions $f'_c = 4.0$ ksi
Appendix 5.3-A6	Cast-In-Place Deck Slab Design for Negative Moment Regions $f'_c = 4.0$ ksi
Appendix 5.3-A7	Slab Overhang Design-Interior Barrier Segment
Appendix 5.3-A8	Slab Overhang Design-End Barrier Segment
Appendix 5.6-A1-1	Span Capability of W Girders
Appendix 5.6-A1-2	Span Capability of WF Girders
Appendix 5.6-A1-3	Span Capability of Deck Bulb Tee Girders
Appendix 5.6-A1-4	Span Capability of WF Thin Deck Girders
Appendix 5.6-A1-5	Span Capability of WF Deck Girders
Appendix 5.6-A1-6	Span Capability of Trapezoidal Tub Girders without Top Flange
Appendix 5.6-A1-7	Span Capability of Trapezoidal Tub Girders with Top Flange
Appendix 5.6-A1-8	Span Capability of Post-tensioned Spliced I-Girders
Appendix 5.6-A1-9	Span Capability of Post-tensioned Spliced Tub Girders

Appendix 5-B1	“A” Dimension for Precast Girder Bridges
Appendix 5-B2	Vacant
Appendix 5-B3	Existing Bridge Widenings
Appendix 5-B4	Post-tensioned Box Girder Bridges
Appendix 5-B5	Simple Span Prestressed Girder Design
Appendix 5-B6	Cast-in-Place Slab Design Example
Appendix 5-B7	Precast Concrete Stay-in-place (SIP) Deck Panel
Appendix 5-B8	W35DG Deck Bulb Tee 48" Wide
Appendix 5-B9	Prestressed Voided Slab with Cast-in-Place Topping
Appendix 5-B10	Positive EQ Reinforcement at Interior Pier of a Prestressed Girder
Appendix 5-B11	LRFD Wingwall Design Vehicle Collision
Appendix 5-B12	Flexural Strength Calculations for Composite T-Beams
Appendix 5-B13	Strut-and-Tie Model Design Example for Hammerhead Pier
Appendix 5-B14	Shear and Torsion Capacity of a Reinforced Concrete Beam
Appendix 5-B15	Sound Wall Design – Type D-2k

RECOMMENDED END HOOKS
All Grades
D = Finished bend diameter

Bar Size	D	180° HOOKS		90° HOOKS
		A or G	J	A or G
#3	2¼"	5"	3"	6"
#4	3"	6"	4"	8"
#5	3¾"	7"	5"	10"
#6	4½"	8"	6"	1'-0"
#7	5¼"	10"	7"	1'-2"
#8	6"	11"	8"	1'-4"
#9	9½"	1'-3"	11¾"	1'-7"
#10	10¾"	1'-5"	1'-1¼"	1'-10"
#11	1'-0"	1'-7"	1'-2¾"	2'-0"
#14	1'-6¼"	2'-3"	1'-9¾"	2'-7"
#18	2'-0"	3'-0"	2'-4½"	3'-5"

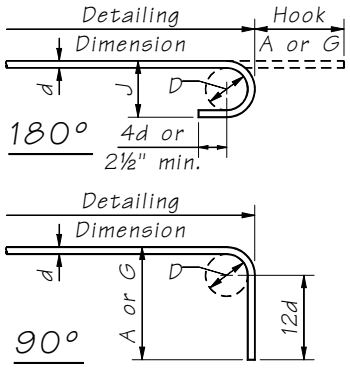

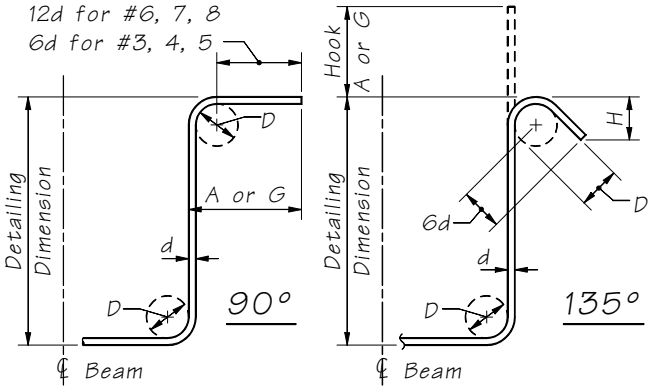

STIRRUP AND TIE HOOK DIMENSIONS
All Grades

Bar Size	D	90° HOOKS	135° HOOKS	
		Hook A or G	Hook A or G	H Approx.
#3	1½"	4"	4"	2½"
#4	2"	4½"	4½"	3"
#5	2½"	6"	5½"	3¾"
#6	4½"	1'-0"	8"	4½"
#7	5¼"	1'-2"	9"	5¼"
#8	6"	1'-4"	10½"	6"

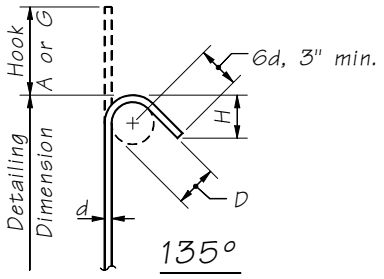

135° SEISMIC STIRRUP/TIE
HOOK DIMENSIONS
All Grades

Bar Size	D	135° HOOKS	
		Hook A or G	H Approx.
#3	1½"	4¼"	3"
#4	2"	4½"	3"
#5	2½"	5½"	3¾"
#6	4½"	8"	4½"
#7	5¼"	9"	5¼"
#8	6"	10½"	6"

PREFERED MINIMUM CLEARANCE AND SPACING
FOR BEAMS AND COLUMNS.
(DISTANCES IN INCHES)

Bar Size	A	B	C	D
#4	3¼	4	-	-
5	3½	4¼	-	-
6	3¾	4½	-	-
7	4	4¾	-	-
8	4¼	5	4½	5½
9	4½	5¼	4¾	6
10	4¾	5½	5	6¼
11	5	6	5⅛	6½
14	5½	7	5½	7¼
18	6	8½	6¾	9

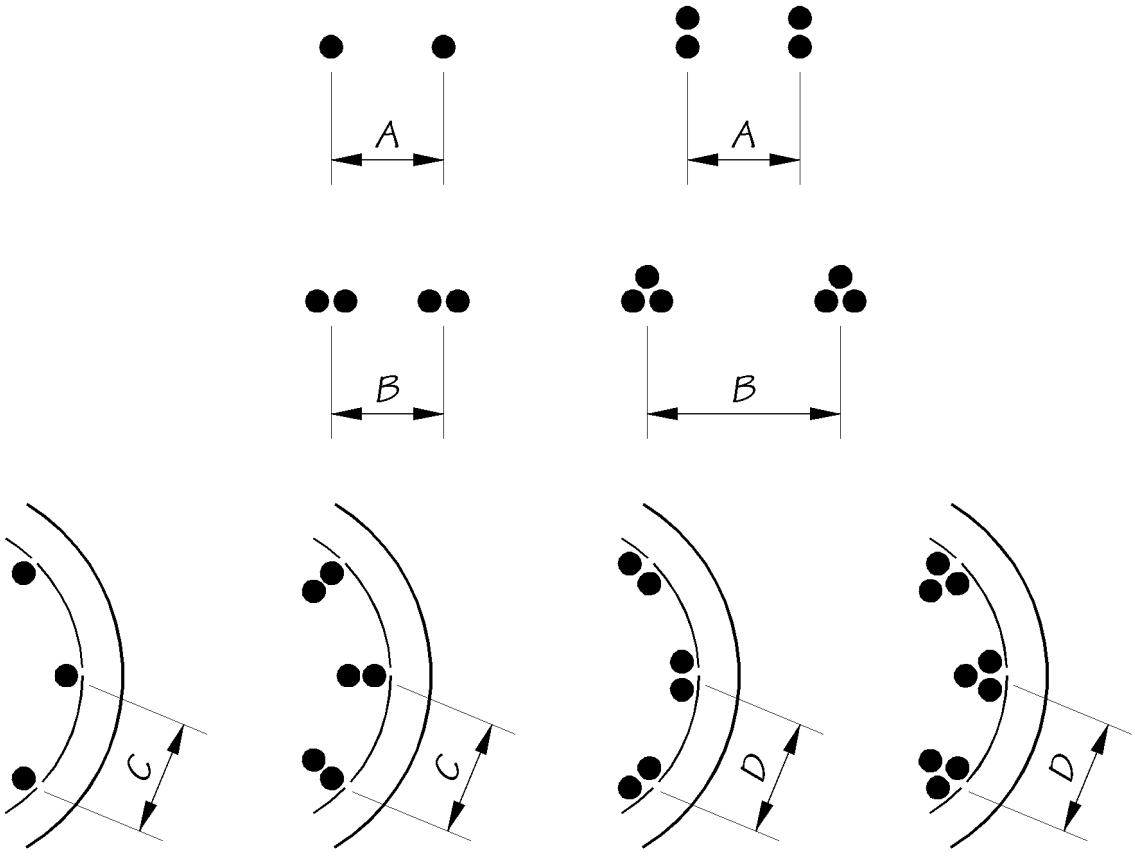

Appendix 5.1-A3 Reinforcing Bar Properties

Bar Size (#)	Weight (lbs/ft)	Nominal Diameter (in)	Outside Diameter (in)	Area (in^2)	Standard Mill Length (ft)
3	0.376	0.375	0.42	0.11	40
4	0.668	0.500	0.56	0.20	40
5	1.043	0.625	0.70	0.31	60
6	1.502	0.750	0.83	0.44	60
7	2.044	0.875	0.96	0.60	60
8	2.670	1.000	1.10	0.79	60
9	3.400	1.128	1.24	1.00	60
10	4.303	1.270	1.40	1.27	60
11	5.313	1.410	1.55	1.56	60
14	7.65	1.693	1.86	2.25	60
18	13.60	2.257	2.48	4.00	60

Bar (#)	f'c (ksi)	Basic Dev. Len. l_{db} (in)	Tension Development Length l_d of Uncoated Deformed Bars (in)							
			λ_{rc} = 0.4		λ_{rc} = 0.6		λ_{rc} = 0.8		λ_{rc} = 1.0	
			Top Bars	Others	Top Bars	Others	Top Bars	Others	Top Bars	Others
3	4.0	27.00	14.04	12.00	21.06	16.20	28.08	21.60	35.10	27.00
	5.0	24.15	12.56	12.00	18.84	14.49	25.12	19.32	31.39	24.15
	6.0	22.05	12.00	12.00	17.20	13.23	22.93	17.64	28.66	22.05
4	4.0	36.00	18.72	14.40	28.08	21.60	37.44	28.80	46.80	36.00
	5.0	32.20	16.74	12.88	25.12	19.32	33.49	25.76	41.86	32.20
	6.0	29.39	15.28	12.00	22.93	17.64	30.57	23.52	38.21	29.39
5	4.0	45.00	23.40	18.00	35.10	27.00	46.80	36.00	58.50	45.00
	5.0	40.25	20.93	16.10	31.39	24.15	41.86	32.20	52.32	40.25
	6.0	36.74	19.11	14.70	28.66	22.05	38.21	29.39	47.77	36.74
6	4.0	54.00	28.08	21.60	42.12	32.40	56.16	43.20	70.20	54.00
	5.0	48.30	25.12	19.32	37.67	28.98	50.23	38.64	62.79	48.30
	6.0	44.09	22.93	17.64	34.39	26.45	45.85	35.27	57.32	44.09
7	4.0	63.00	32.76	25.20	49.14	37.80	65.52	50.40	81.90	63.00
	5.0	56.35	29.30	22.54	43.95	33.81	58.60	45.08	73.25	56.35
	6.0	51.44	26.75	20.58	40.12	30.86	53.50	41.15	66.87	51.44
8	4.0	72.00	37.44	28.80	56.16	43.20	74.88	57.60	93.60	72.00
	5.0	64.40	33.49	25.76	50.23	38.64	66.97	51.52	83.72	64.40
	6.0	58.79	30.57	23.52	45.85	35.27	61.14	47.03	76.42	58.79
9	4.0	81.22	42.23	32.49	63.35	48.73	84.46	64.97	105.58	81.22
	5.0	72.64	37.77	29.06	56.66	43.59	75.55	58.11	94.43	72.64
	6.0	66.31	34.48	26.53	51.72	39.79	68.97	53.05	86.21	66.31
10	4.0	91.44	47.55	36.58	71.32	54.86	95.10	73.15	118.87	91.44
	5.0	81.79	42.53	32.71	63.79	49.07	85.06	65.43	106.32	81.79
	6.0	74.66	38.82	29.86	58.24	44.80	77.65	59.73	97.06	74.66
11	4.0	101.52	52.79	40.61	79.19	60.91	105.58	81.22	131.98	101.52
	5.0	90.80	47.22	36.32	70.83	54.48	94.43	72.64	118.04	90.80
	6.0	82.89	43.10	33.16	64.65	49.73	86.21	66.31	107.76	82.89
14	4.0	121.90	63.39	48.76	95.08	73.14	126.77	97.52	158.46	121.90
	5.0	109.03	56.69	43.61	85.04	65.42	113.39	87.22	141.74	109.03
	6.0	99.53	51.75	39.81	77.63	59.72	103.51	79.62	129.39	99.53
18	4.0	162.50	84.50	65.00	126.75	97.50	169.00	130.00	211.26	162.50
	5.0	145.35	75.58	58.14	113.37	87.21	151.16	116.28	188.95	145.35
	6.0	132.68	69.00	53.07	103.49	79.61	137.99	106.15	172.49	132.68

Notes:

1. Values based on use of normal weight concrete.
2. Values based on use of grade 60 reinforcement.
3. Top bars are horizontal bars placed so that more than 12” of fresh concrete is cast below the reinforcement.
4. The minimum tension development length = 12”.
5. λ_{rc} is the Reinforcement Confinement Factor.

			Tension Development Length ld of Epoxy Coated Deformed Bars (in) (cover less than 3_{db} or clear spacing between bars less than 6_{db}) λ_{cf} = 1.5							
Bar	*f'*c	Basic Dev.	λ_{rc} = 0.4		λ_{rc} = 0.6		λ_{rc} = 0.8		λ_{rc} = 1.0	
(#)	(ksi)	Len. l_{db} (in)	Top Bars	Others	Top Bars	Others	Top Bars	Others	Top Bars	Others
3	4.0	27.00	18.36	16.20	27.54	24.30	36.72	32.40	45.90	40.50
	5.0	24.15	16.42	14.49	24.63	21.73	32.84	28.98	41.05	36.22
	6.0	22.05	14.99	13.23	22.49	19.84	29.98	26.45	37.48	33.07
4	4.0	36.00	24.48	21.60	36.72	32.40	48.96	43.20	61.20	54.00
	5.0	32.20	21.90	19.32	32.84	28.98	43.79	38.64	54.74	48.30
	6.0	29.39	19.99	17.64	29.98	26.45	39.98	35.27	49.97	44.09
5	4.0	45.00	30.60	27.00	45.90	40.50	61.20	54.00	76.50	67.50
	5.0	40.25	27.37	24.15	41.05	36.22	54.74	48.30	68.42	60.37
	6.0	36.74	24.98	22.05	37.48	33.07	49.97	44.09	62.46	55.11
6	4.0	54.00	36.72	32.40	55.08	48.60	73.44	64.80	91.80	81.00
	5.0	48.30	32.84	28.98	49.27	43.47	65.69	57.96	82.11	72.45
	6.0	44.09	29.98	26.45	44.97	39.68	59.96	52.91	74.95	66.14
7	4.0	63.00	42.84	37.80	64.26	56.70	85.68	75.60	107.10	94.50
	5.0	56.35	38.32	33.81	57.48	50.71	76.63	67.62	95.79	84.52
	6.0	51.44	34.98	30.86	52.47	46.30	69.96	61.73	87.45	77.16
8	4.0	72.00	48.96	43.20	73.44	64.80	97.92	86.40	122.40	108.00
	5.0	64.40	43.79	38.64	65.69	57.96	87.58	77.28	109.48	96.60
	6.0	58.79	39.98	35.27	59.96	52.91	79.95	70.55	99.94	88.18
9	4.0	81.22	55.23	48.73	82.84	73.09	110.45	97.46	138.07	121.82
	5.0	72.64	49.40	43.59	74.09	65.38	98.79	87.17	123.49	108.96
	6.0	66.31	45.09	39.79	67.64	59.68	90.19	79.58	112.73	99.47
10	4.0	91.44	62.18	54.86	93.27	82.30	124.36	109.73	155.45	137.16
	5.0	81.79	55.61	49.07	83.42	73.61	111.23	98.14	139.04	122.68
	6.0	74.66	50.77	44.80	76.15	67.19	101.54	89.59	126.92	111.99
11	4.0	101.52	69.03	60.91	103.55	91.37	138.07	121.82	172.58	152.28
	5.0	90.80	61.75	54.48	92.62	81.72	123.49	108.96	154.36	136.20
	6.0	82.89	56.37	49.73	84.55	74.60	112.73	99.47	140.91	124.34
14	4.0	121.90	82.89	73.14	124.33	109.71	165.78	146.28	207.22	182.84
	5.0	109.03	74.14	65.42	111.21	98.12	148.28	130.83	185.35	163.54
	6.0	99.53	67.68	59.72	101.52	89.57	135.36	119.43	169.20	149.29
18	4.0	162.50	110.50	97.50	165.75	146.25	221.01	195.00	276.26	243.76
	5.0	145.35	98.84	87.21	148.25	130.81	197.67	174.42	247.09	218.02
	6.0	132.68	90.23	79.61	135.34	119.42	180.45	159.22	225.56	199.03

Notes:

1. Values based on use of normal weight concrete.
2. Values based on use of grade 60 reinforcement.
3. Top bars are horizontal bars placed so that more than 12” of fresh concrete is cast below the reinforcement.
4. The minimum tension development length = 12”.
5. λ_{rc} is the Reinforcement Confinement Factor.

			Tension Development Length l_d of Epoxy Coated Deformed Bars (in) (cover not less than 3_{db} and clear spacing between bars not less than 6_{db}) λ_{cf} = 1.2							
Bar	***f'*c**	**Basic Dev.**	**λ_{rc} = 0.4**		**λ_{rc} = 0.6**		**λ_{rc} = 0.8**		**λ_{rc} = 1.0**	
(#)	**(ksi)**	**Len. l_{db} (in)**	**Top Bars**	**Others**	**Top Bars**	**Others**	**Top Bars**	**Others**	**Top Bars**	**Others**
3	4.0	27.00	16.85	12.96	25.27	19.44	33.70	25.92	42.12	32.40
	5.0	24.15	15.07	12.00	22.60	17.39	30.14	23.18	37.67	28.98
	6.0	22.05	13.76	12.00	20.63	15.87	27.51	21.16	34.39	26.45
4	4.0	36.00	22.46	17.28	33.70	25.92	44.93	34.56	56.16	43.20
	5.0	32.20	20.09	15.46	30.14	23.18	40.18	30.91	50.23	38.64
	6.0	29.39	18.34	14.11	27.51	21.16	36.68	28.22	45.85	35.27
5	4.0	45.00	28.08	21.60	42.12	32.40	56.16	43.20	70.20	54.00
	5.0	40.25	25.12	19.32	37.67	28.98	50.23	38.64	62.79	48.30
	6.0	36.74	22.93	17.64	34.39	26.45	45.85	35.27	57.32	44.09
6	4.0	54.00	33.70	25.92	50.54	38.88	67.39	51.84	84.24	64.80
	5.0	48.30	30.14	23.18	45.21	34.78	60.28	46.37	75.35	57.96
	6.0	44.09	27.51	21.16	41.27	31.75	55.03	42.33	68.78	52.91
7	4.0	63.00	39.31	30.24	58.97	45.36	78.62	60.48	98.28	75.60
	5.0	56.35	35.16	27.05	52.74	40.57	70.32	54.09	87.90	67.62
	6.0	51.44	32.10	24.69	48.15	37.04	64.20	49.38	80.25	61.73
8	4.0	72.00	44.93	34.56	67.39	51.84	89.86	69.12	112.32	86.40
	5.0	64.40	40.18	30.91	60.28	46.37	80.37	61.82	100.46	77.28
	6.0	58.79	36.68	28.22	55.03	42.33	73.37	56.44	91.71	70.55
9	4.0	81.22	50.68	38.98	76.02	58.48	101.36	77.97	126.70	97.46
	5.0	72.64	45.33	34.87	67.99	52.30	90.66	69.74	113.32	87.17
	6.0	66.31	41.38	31.83	62.07	47.75	82.76	63.66	103.45	79.58
10	4.0	91.44	57.06	43.89	85.59	65.84	114.12	87.78	142.65	109.73
	5.0	81.79	51.03	39.26	76.55	58.89	102.07	78.51	127.59	98.14
	6.0	74.66	46.59	35.84	69.88	53.76	93.18	71.67	116.47	89.59
11	4.0	101.52	63.35	48.73	95.02	73.09	126.70	97.46	158.37	121.82
	5.0	90.80	56.66	43.59	84.99	65.38	113.32	87.17	141.65	108.96
	6.0	82.89	51.72	39.79	77.59	59.68	103.45	79.58	129.31	99.47
14	4.0	121.90	76.06	58.51	114.09	87.77	152.13	117.02	190.16	146.28
	5.0	109.03	68.03	52.33	102.05	78.50	136.07	104.67	170.08	130.83
	6.0	99.53	62.11	47.77	93.16	71.66	124.21	95.55	155.26	119.43
18	4.0	162.50	101.40	78.00	152.10	117.00	202.80	156.00	253.51	195.00
	5.0	145.35	90.70	69.77	136.05	104.65	181.39	139.53	226.74	174.42
	6.0	132.68	82.79	63.69	124.19	95.53	165.59	127.38	206.99	159.22

Notes:

1. Values based on use of normal weight concrete.
2. Values based on use of grade 60 reinforcement.
3. Top bars are horizontal bars placed so that more than 12” of fresh concrete is cast below the reinforcement.
4. The minimum tension development length = 12”.
5. λ_{rc} is the Reinforcement Confinement Factor.

Appendix 5.1-A5 Compression Development Length and Minimum Lap Splice of Grade 60 Bars

Bar (#)	Compression Development Length, l_d (in)			Min. Compression Lap Splice (in)
	f'_c = 3 ksi	f'_c = 4 ksi	$f'_c \geq$ 5 ksi	$f'c \geq$ 3 ksi
3	12.00	12.00	12.00	24.00
4	12.00	12.00	12.00	24.00
5	13.64	12.00	12.00	24.00
6	16.37	14.18	13.50	24.00
7	19.10	16.54	15.75	26.25
8	21.82	18.90	18.00	30.00
9	24.62	21.32	20.30	33.84
10	27.72	24.00	22.86	38.10
11	30.77	26.65	25.38	42.30
14	36.95	32.00	30.47	50.79
18	49.26	42.66	40.63	67.71

Notes:

1. Where excess bar area is provided, the development length may be reduced by the ratio of required area to provided area.
2. Where reinforcement is enclosed within a spiral composed of a bar of not less than 0.25 inches in diameter and spaced at not more than a 4.0 inch pitch, the compression development length may be multiplied by 0.75.
3. The minimum compression development length is 12 inches.
4. Where bars of different size are lap spliced in compression, the splice length shall not be less than the development length of the larger bar or the splice length of the smaller bar.
5. Where ties along the splice have an effective area not less than 0.15 percent of the product of the thickness of the compression component times the tie spacing, the compression lap splice may be multiplied by 0.83.
6. Where the splice is confined by spirals, the compression lap splice may be multiplied by 0.75.
7. The minimum compression lap splice length is 24 inches.

Bar (#)	$f'c$ (ksi)	Basic Dev. Len. l_{hb} (in)	Standard Hook Tension Development Length l_{dh} (in)			
			Cover Factor λ_{rc} = 1.0 (see Note 5)		Cover Factor λ_{rc} = 0.8 (see Note 5)	
			Reinforcement Confinement Factor λ_{rc} = 1.0 (see Notes 6 and 7)	Reinforcement Confinement Factor λ_{rc} = 0.8 (see Notes 6 and 7)	Reinforcement Confinement Factor λ_{rc} = 1.0 (see Notes 6 and 7)	Reinforcement Confinement Factor λ_{rc} = 0.8 (see Notes 6 and 7)
3	4	7.13	7.13	6.00	6.00	6.00
	5	6.37	6.37	6.00	6.00	6.00
	6	5.82	6.00	6.00	6.00	6.00
4	4	9.50	9.50	7.60	7.60	6.08
	5	8.50	8.50	6.80	6.80	6.00
	6	7.76	7.76	6.21	6.21	6.00
5	4	11.88	11.88	9.50	9.50	7.60
	5	10.62	10.62	8.50	8.50	6.80
	6	9.70	9.70	7.76	7.76	6.21
6	4	14.25	14.25	11.40	11.40	9.12
	5	12.75	12.75	10.20	10.20	8.16
	6	11.64	11.64	9.31	9.31	7.45
7	4	16.63	16.63	13.30	13.30	10.64
	5	14.87	14.87	11.90	11.90	9.52
	6	13.57	13.57	10.86	10.86	8.69
8	4	19.00	19.00	15.20	15.20	12.16
	5	16.99	16.99	13.60	13.60	10.88
	6	15.51	15.51	12.41	12.41	9.93
9	4	21.43	21.43	17.15	17.15	13.72
	5	19.17	19.17	15.34	15.34	12.27
	6	17.50	17.50	14.00	14.00	11.20
10	4	24.13	24.13	19.30	19.30	15.44
	5	21.58	21.58	17.27	17.27	13.81
	6	19.70	19.70	15.76	15.76	12.61
11	4	26.79	26.79	21.43	21.43	17.15
	5	23.96	23.96	19.17	19.17	15.34
	6	21.87	21.87	17.50	17.50	14.00
14	4	32.17	32.17	32.17	32.17	32.17
	5	28.77	28.77	28.77	28.77	28.77
	6	26.26	26.26	26.26	26.26	26.26
18	4	42.88	42.88	42.88	42.88	42.88
	5	38.36	38.36	38.36	38.36	38.36
	6	35.01	35.01	35.01	35.01	35.01

Notes:

1. Values based on use of normal weight concrete.
2. Values based on use of grade 60 reinforcement.
3. The basic development length l_{hb} shall be multiplied by 1.2 for epoxy coated reinforcement.
4. The basic development length l_{hb} may be reduced by the ratio of required area to provided area where excess bar area is provided.
5. The basic development length l_{hb} may be multiplied by 0.8 for #11 and smaller bars for hooks with side cover normal to plane of the hook not less than 2.5 inches, and for 90 degree hook with cover on the bar extension beyond hook not less than 2.0 inches.
6. The basic development length l_{hb} may be multiplied by 0.8 for 90 degree hooks of #11 and smaller bars that are either enclosed within ties or stirrups perpendicular to the bar being developed, spaced not greater than $3d_b$ along the development length, l_{dh}, of the hook; or enclosed within ties or stirrups parallel to the bar being developed spaced not greater than $3d_b$ along the length of the tail extension of the hook plus bend, and in both cases the first tie or stirrup enclosing the bent portion of the hook is within $2d_b$ of the outside of the bend.
7. The basic development length l_{hb} may be multiplied by 0.8 for 180 degree hooks of #11 and smaller bars that are enclosed within ties or stirrups perpendicular to the bar being developed, spaced not greater than $3d_b$ along the development length, l_{dh}, of the hook, and the first tie or stirrup enclosing the bent portion of the hook is within $2d_b$ of the outside of the bend.
8. Minimum tension development length is the larger of $8d_b$ and 6 inches.

Appendix 5.1-A7 Tension Lap Splice Lengths of Grade 60 Bars – Class B

Bar (#)	f'c (ksi)	Class B Tension Lap Splice Length of Uncoated Deformed Bars (in)							
		λ_{rc} = 0.4		λ_{rc} = 0.6		λ_{rc} = 0.8		λ_{rc} = 1.0	
		Top Bars	Others	Top Bars	Others	Top Bars	Others	Top Bars	Others
3	4.0	24.00	24.00	27.38	24.00	36.50	28.08	45.63	35.10
	5.0	24.00	24.00	24.49	24.00	32.65	25.12	40.81	31.39
	6.0	24.00	24.00	24.00	24.00	29.81	24.00	37.26	28.66
4	4.0	24.34	24.00	36.50	28.08	48.67	37.44	60.84	46.80
	5.0	24.00	24.00	32.65	25.12	43.53	33.49	54.42	41.86
	6.0	24.00	24.00	29.81	24.00	39.74	30.57	49.68	38.21
5	4.0	30.42	24.00	45.63	35.10	60.84	46.80	76.05	58.50
	5.0	27.21	24.00	40.81	31.39	54.42	41.86	68.02	52.32
	6.0	24.84	24.00	37.26	28.66	49.68	38.21	62.09	47.77
6	4.0	36.50	28.08	54.76	42.12	73.01	56.16	91.26	70.20
	5.0	32.65	25.12	48.98	37.67	65.30	50.23	81.63	62.79
	6.0	29.81	24.00	44.71	34.39	59.61	45.85	74.51	57.32
7	4.0	42.59	32.76	63.88	49.14	85.18	65.52	106.47	81.90
	5.0	38.09	29.30	57.14	43.95	76.18	58.60	95.23	73.25
	6.0	34.77	26.75	52.16	40.12	69.55	53.50	86.93	66.87
8	4.0	48.67	37.44	73.01	56.16	97.34	74.88	121.68	93.60
	5.0	43.53	33.49	65.30	50.23	87.07	66.97	108.83	83.72
	6.0	39.74	30.57	59.61	45.85	79.48	61.14	99.35	76.42
9	4.0	54.90	42.23	82.35	63.35	109.80	84.46	137.26	105.58
	5.0	49.11	37.77	73.66	56.66	98.21	75.55	122.76	94.43
	6.0	44.83	34.48	67.24	51.72	89.65	68.97	112.07	86.21
10	4.0	61.81	47.55	92.72	71.32	123.63	95.10	154.53	118.87
	5.0	55.29	42.53	82.93	63.79	110.58	85.06	138.22	106.32
	6.0	50.47	38.82	75.71	58.24	100.94	77.65	126.18	97.06
11	4.0	68.63	52.79	102.94	79.19	137.26	105.58	171.57	131.98
	5.0	61.38	47.22	92.07	70.83	122.76	94.43	153.46	118.04
	6.0	56.03	43.10	84.05	64.65	112.07	86.21	140.09	107.76
14		Not Allowed		Not Allowed		Not Allowed		Not Allowed	
18		Not Allowed		Not Allowed		Not Allowed		Not Allowed	

Notes:

1. Values based on use of normal weight concrete.
2. Values based on use of grade 60 reinforcement.
3. Top bars are horizontal bars placed so that more than 12” of fresh concrete is cast below the reinforcement.
4. The minimum tension lap splice length = 24”.
5. λ_{rc} is the Reinforcement Confinement Factor.
6. Class A tension lap splices may be used where the area of reinforcement provided is at least twice that required by analysis over the entire length of the lap splice and one-half or less of the total reinforcement is spliced within the required lap splice length. The Class A modification factor is 0.77.

		Class B Tension Lap Splice Length of Epoxy Coated Deformed Bars (in) (cover less than 3_{db} or clear spacing between bars less than 6_{db}) λ_{cf} = 1.5							
Bar	***f'*c**	**λ_{rc} = 0.4**		**λ_{rc} = 0.6**		**λ_{rc} = 0.8**		**λ_{rc} = 1.0**	
(#)	**(ksi)**	**Top Bars**	**Others**	**Top Bars**	**Others**	**Top Bars**	**Others**	**Top Bars**	**Others**
3	4.0	24.00	24.00	35.80	31.59	47.74	42.12	59.67	52.65
	5.0	24.00	24.00	32.02	28.25	42.70	37.67	53.37	47.09
	6.0	24.00	24.00	29.23	25.79	38.98	34.39	48.72	42.99
4	4.0	31.82	28.08	47.74	42.12	63.65	56.16	79.56	70.20
	5.0	28.46	25.12	42.70	37.67	56.93	50.23	71.16	62.79
	6.0	25.98	24.00	38.98	34.39	51.97	45.85	64.96	57.32
5	4.0	39.78	35.10	59.67	52.65	79.56	70.20	99.45	87.75
	5.0	35.58	31.39	53.37	47.09	71.16	62.79	88.95	78.49
	6.0	32.48	28.66	48.72	42.99	64.96	57.32	81.20	71.65
6	4.0	47.74	42.12	71.60	63.18	95.47	84.24	119.34	105.30
	5.0	42.70	37.67	64.04	56.51	85.39	75.35	106.74	94.18
	6.0	38.98	34.39	58.46	51.59	77.95	68.78	97.44	85.98
7	4.0	55.69	49.14	83.54	73.71	111.38	98.28	139.23	122.85
	5.0	49.81	43.95	74.72	65.93	99.62	87.90	124.53	109.88
	6.0	45.47	40.12	68.21	60.18	90.94	80.25	113.68	100.31
8	4.0	63.65	56.16	95.47	84.24	127.30	112.32	159.12	140.40
	5.0	56.93	50.23	85.39	75.35	113.86	100.46	142.32	125.58
	6.0	51.97	45.85	77.95	68.78	103.94	91.71	129.92	114.64
9	4.0	71.79	63.35	107.69	95.02	143.59	126.70	179.49	158.37
	5.0	64.22	56.66	96.32	84.99	128.43	113.32	160.54	141.65
	6.0	58.62	51.72	87.93	77.59	117.24	103.45	146.55	129.31
10	4.0	80.83	71.32	121.25	106.98	161.67	142.65	202.08	178.31
	5.0	72.30	63.79	108.45	95.69	144.60	127.59	180.75	159.48
	6.0	66.00	58.24	99.00	87.35	132.00	116.47	165.00	145.59
11	4.0	89.74	79.19	134.62	118.78	179.49	158.37	224.36	197.96
	5.0	80.27	70.83	120.40	106.24	160.54	141.65	200.67	177.06
	6.0	73.28	64.65	109.91	96.98	146.55	129.31	183.19	161.64
14		Not Allowed		Not Allowed		Not Allowed		Not Allowed	
18		Not Allowed		Not Allowed		Not Allowed		Not Allowed	

Notes:

1. Values based on use of normal weight concrete.
2. Values based on use of grade 60 reinforcement.
3. Top bars are horizontal bars placed so that more than 12” of fresh concrete is cast below the reinforcement.
4. The minimum tension lap splice length = 24”.
5. λ_{rc} is the Reinforcement Confinement Factor.
6. Class A tension lap splices may be used where the area of reinforcement provided is at least twice that required by analysis over the entire length of the lap splice and one-half or less of the total reinforcement is spliced within the required lap splice length. The Class A modification factor is 0.77.

		Class B Tension Lap Splice Length of Epoxy Coated Deformed Bars (in) (cover not less than 3_{db} and clear spacing between bars not less than 6_{db}) λ_{cf} = 1.2							
Bar	***f'c***	**λ_{rc} = 0.4**		**λ_{rc} = 0.6**		**λ_{rc} = 0.8**		**λ_{rc} = 1.0**	
(#)	**(ksi)**	**Top Bars**	**Others**	**Top Bars**	**Others**	**Top Bars**	**Others**	**Top Bars**	**Others**
3	4.0	24.00	24.00	32.85	25.27	43.80	33.70	54.76	42.12
	5.0	24.00	24.00	29.39	24.00	39.18	30.14	48.98	37.67
	6.0	24.00	24.00	26.82	24.00	35.77	27.51	44.71	34.39
4	4.0	29.20	24.00	43.80	33.70	58.41	44.93	73.01	56.16
	5.0	26.12	24.00	39.18	30.14	52.24	40.18	65.30	50.23
	6.0	24.00	24.00	35.77	27.51	47.69	36.68	59.61	45.85
5	4.0	36.50	28.08	54.76	42.12	73.01	56.16	91.26	70.20
	5.0	32.65	25.12	48.98	37.67	65.30	50.23	81.63	62.79
	6.0	29.81	24.00	44.71	34.39	59.61	45.85	74.51	57.32
6	4.0	43.80	33.70	65.71	50.54	87.61	67.39	109.51	84.24
	5.0	39.18	30.14	58.77	45.21	78.36	60.28	97.95	75.35
	6.0	35.77	27.51	53.65	41.27	71.53	55.03	89.42	68.78
7	4.0	51.11	39.31	76.66	58.97	102.21	78.62	127.76	98.28
	5.0	45.71	35.16	68.57	52.74	91.42	70.32	114.28	87.90
	6.0	41.73	32.10	62.59	48.15	83.46	64.20	104.32	80.25
8	4.0	58.41	44.93	87.61	67.39	116.81	89.86	146.02	112.32
	5.0	52.24	40.18	78.36	60.28	104.48	80.37	130.60	100.46
	6.0	47.69	36.68	71.53	55.03	95.38	73.37	119.22	91.71
9	4.0	65.88	50.68	98.82	76.02	131.76	101.36	164.71	126.70
	5.0	58.93	45.33	88.39	67.99	117.85	90.66	147.32	113.32
	6.0	53.79	41.38	80.69	62.07	107.59	82.76	134.48	103.45
10	4.0	74.18	57.06	111.26	85.59	148.35	114.12	185.44	142.65
	5.0	66.35	51.03	99.52	76.55	132.69	102.07	165.86	127.59
	6.0	60.56	46.59	90.85	69.88	121.13	93.18	151.41	116.47
11	4.0	82.35	63.35	123.53	95.02	164.71	126.70	205.88	158.37
	5.0	73.66	56.66	110.49	84.99	147.32	113.32	184.15	141.65
	6.0	67.24	51.72	100.86	77.59	134.48	103.45	168.10	129.31
14		Not Allowed		Not Allowed		Not Allowed		Not Allowed	
18		Not Allowed		Not Allowed		Not Allowed		Not Allowed	

Notes:

1. Values based on use of normal weight concrete.
2. Values based on use of grade 60 reinforcement.
3. Top bars are horizontal bars placed so that more than 12” of fresh concrete is cast below the reinforcement.
4. The minimum tension lap splice length = 24”.
5. λ_{rc} is the Reinforcement Confinement Factor.
6. Class A tension lap splices may be used where the area of reinforcement provided is at least twice that required by analysis over the entire length of the lap splice and one-half or less of the total reinforcement is spliced within the required lap splice length. The Class A modification factor is 0.77.

AASHTO M203 Grade 270 Uncoated Prestressing Strands
Properties and Development Length

Strand Diameter (in)	Weight (lbs/ft)	Nominal Diameter (in)	Area (in^2)	Transfer length (in)	Develop. Length *k* = 1.0 (ft)	Develop. Length *k* = 1.6 (ft)
⅜	0.290	0.375	0.085	22.5	5.05	8.08
7/16	0.390	0.438	0.115	26.3	5.90	9.44
½	0.520	0.500	0.153	30.0	6.74	10.78
½ S	0.568	0.520	0.167	31.2	7.01	11.21
9/16	0.651	0.563	0.192	33.8	7.58	12.14
0.60	0.740	0.600	0.217	36.0	8.08	12.93
0.62	0.788	0.620	0.231	37.2	8.35	13.36
0.70	1.000	0.700	0.294	42.0	9.43	15.09

Assumptions for determining development length:

f_{ps} = f_{pu} = 270 ksi

f_{pe} = (270 ksi x 0.75)–40 ksi = 162.5 ksi

Service Load — Concrete Stresses and Constants

		CLASS	CLASS
n	(See E_c below)	8	10
f'_c		4000 psi.	3000 psi.
f_c	(Compression)	1600	1200
f_t	(Tension) Use only with special permission	100	86
f_s	(Grade 40)	20,000	20,000
f_s	(Grade 60)	24,000	24,000
v_c	(With web reinf.)	313	271
v_c		60 *	52 *
	Slabs & Footings (Peripheral Shear)		
	v_c	114	99
	v_c (With web reinf.)	190	164
K	(f_s = 24000)	246	
K		272	197
k	Balanced rectangular sections	.390	.375
j		.870	.875
p		.0156	.01125
E_c	(for stress calc.) (n as above)	522,000 #/in²	418,000 #/in²
E_c	(for short term defl. due to E.Q., etc.) (n = 8)	522,000	522,000
E_c	(for D.L. Camber of Slabs, T&S Moms., Settlement) (n = 16)	261,000	261,000
E_c	(for D.L. Camber, except slabs) (n = 24)	174,000	174,000

Temp. Coeff. = .000006 in./in. ~ 45° Drop to 35° Rise ~ All climates.
Shrinkage Coeff. = .0002 in. (Temp. rise & shrinkage cancel).

* For more detailed analysis $v_c = 0.9(f'_c)^{\frac{1}{2}} + 1100\,\rho_w\left(\frac{Vd}{M}\right)$
See 1974 A.A.S.H.T.O. Interim 1.5.29 (B)(2).

Stirrup spacing ; (Kip & inch units) $S = \frac{A_s \times f_s \times jd}{V - V_c} = \frac{A_s \times 20 \times 7/8\,d}{V_s} = \frac{17.50\,A_s \times d}{V_s}$

A_s = Total area of stirrup legs.
V_s = Total shear taken by stirrups.
V = Total shear on section.
V_c = Total shear by conc. = $v_c \times bjd$

o

$d = \sqrt{M/bK}$ (Balanced rectangular section)

$f_c = \frac{2M}{kjbd^2}$ (Rectangular section)

$f_s = \frac{M}{A_s jd}$

$v = \frac{V}{bjd}$

$n = \frac{E_s}{E_c}$

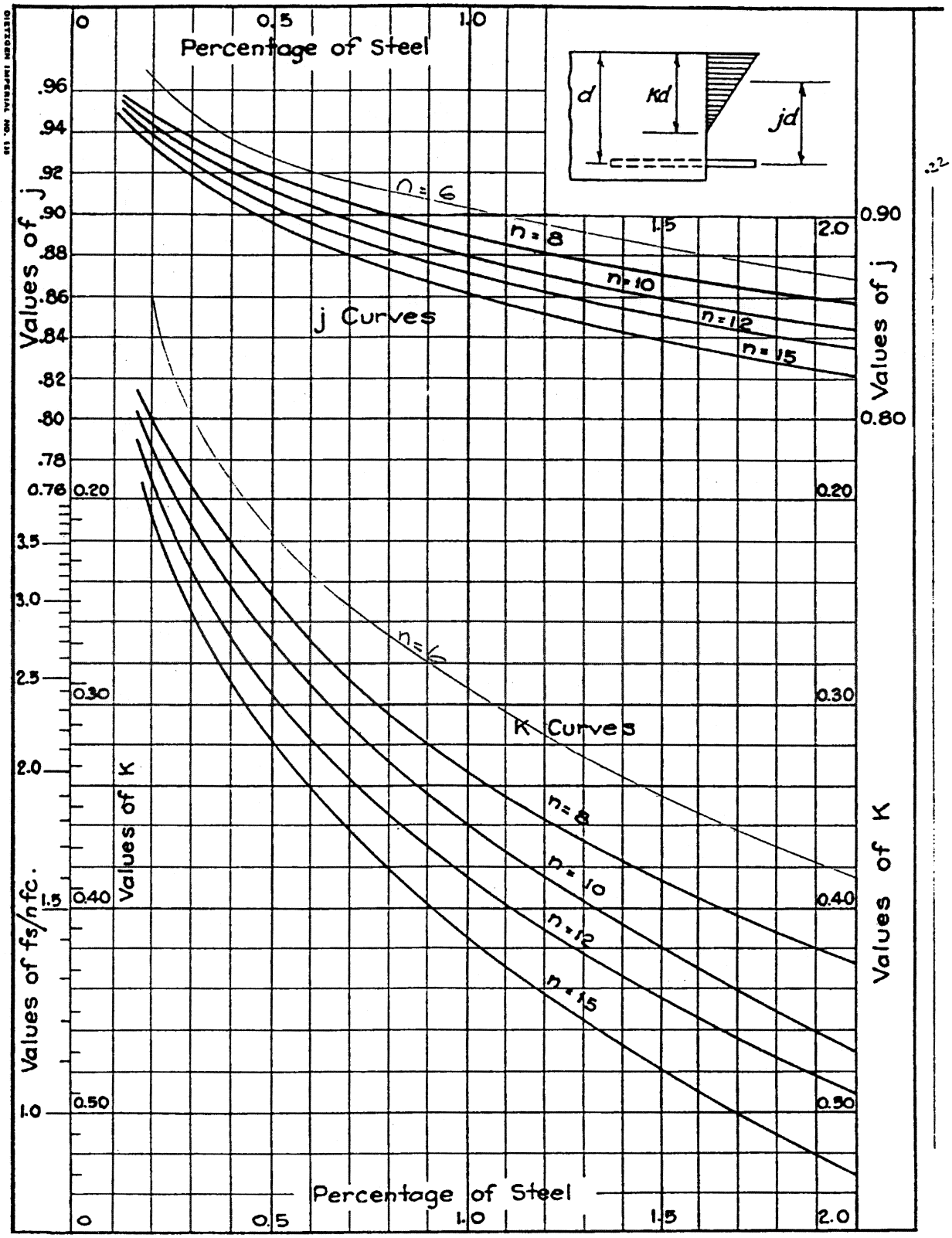
Percentage of Steel
0
0.5
1.0
1.5
2.0
d
kd
jd
Values of j
.96
.94
.92
.90
.88
.86
.84
.82
.80
.78
0.76
n=6
n=8
n=10
n=12
n=15
j Curves
0.90
0.80
Values of j
Values of fs/nfc.
Values of K
0.20
0.30
0.40
0.50
3.5
3.0
2.5
2.0
1.5
1.0
K Curves
n=6
n=8
n=10
n=12
n=15
Values of K
Percentage of Steel

COEFFICIENTS (K, k, j, p) FOR RECTANGULAR SECTIONS

f'_c and n	f_c	K	k	j	p	K	k	j	p
		f_s = 16,000		a = 1.13		f_s = 18,000		a = 1.29	
	875.	137.	.356	.881	.0097	128.	.329	.890	.0080
2500	1000.	169.	.387	.871	.0121	158.	.359	.880	.0100
	1125.	201.	.415	.862	.0146	190.	.387	.871	.0121
10.1	1250.	235.	.441	.853	.0172	222.	.412	.863	.0143
	1500.	306.	.486	.838	.0228	291.	.457	.848	.0190
	1050.	173.	.376	.875	.0124	162.	.349	.884	.0102
3000	1200.	212.	.408	.864	.0153	199.	.380	.873	.0127
	1350.	252.	.437	.854	.0184	238.	.408	.864	.0153
9.2	1500.	294.	.463	.846	.0217	278.	.434	.855	.0181
	1800.	380.	.509	.830	.0286	362.	.479	.840	.0240
	1400.	249.	.412	.863	.0180	234.	.384	.872	.0149
4000	1600.	303.	.444	.852	.0222	286.	.416	.861	.0185
	1800.	359.	.474	.842	.0266	341.	.444	.852	.0222
8.0	2000.	417.	.500	.833	.0313	397.	.471	.843	.0261
	2400.	536.	.545	.818	.0409	513.	.516	.828	.0344
	1750.	327.	.437	.854	.0239	309.	.408	.864	.0199
5000	2000.	397.	.470	.843	.0294	376.	.441	.853	.0245
	2250.	468.	.500	.833	.0351	446.	.470	.843	.0294
7.1	2500.	542.	.526	.825	.0411	518.	.497	.835	.0345
	3000.	694.	.571	.810	.0535	666.	.542	.819	.0452
		f_s = 20,000		a = 1.44		f_s = 22,000		a = 1.60	
	875.	120.	.306	.898	.0067	113.	.287	.904	.0057
2500	1000.	149.	.336	.888	.0084	141.	.315	.895	.0072
	1125.	179.	.362	.879	.0102	170.	.341	.886	.0087
10.1	1250.	211.	.387	.871	.0121	200.	.365	.878	.0104
	1500.	277.	.431	.856	.0162	264.	.408	.864	.0139
	1050.	152.	.326	.891	.0085	144.	.305	.898	.0073
3000	1200.	188.	.356	.881	.0107	178.	.334	.889	.0091
	1350.	226.	.383	.872	.0129	214.	.361	.880	.0111
9.2	1500.	265.	.408	.864	.0153	252.	.385	.872	.0131
	1800.	346.	.453	.849	.0204	331.	.429	.857	.0176
	1400.	221.	.359	.880	.0126	210.	.337	.888	.0107
4000	1600.	272.	.390	.870	.0156	258.	.368	.877	.0134
	1800.	324.	.419	.860	.0188	309.	.396	.868	.0162
8.0	2000.	379.	.444	.852	.0222	362.	.421	.860	.0191
	2400.	492.	.490	.837	.0294	472.	.466	.845	.0254
	1750.	292.	.383	.872	.0168	278.	.361	.880	.0144
5000	2000.	358.	.415	.862	.0208	341.	.392	.869	.0178
	2250.	426.	.444	.852	.0250	407.	.421	.860	.0215
7.1	2500.	496.	.470	.843	.0294	475.	.447	.851	.0254
	3000.	641.	.516	.828	.0387	617.	.492	.836	.0335
		f_s = 27,000		a = 2.00		f_s = 30,000		a = 2.24	
	875.	99.	.247	.918	.0040	92.	.228	.924	.0033
2500	1000.	124.	.272	.909	.0050	115.	.252	.916	.0042
	1125.	150.	.296	.901	.0062	140.	.275	.908	.0052
10.1	1250.	178.	.319	.894	.0074	167.	.296	.901	.0062
	1500.	237.	.359	.880	.0100	224.	.336	.888	.0084
	1050.	126.	.264	.912	.0051	117.	.244	.919	.0043
3000	1200.	157.	.290	.903	.0064	147.	.269	.910	.0054
	1350.	190.	.315	.895	.0079	178.	.293	.902	.0066
9.2	1500.	225.	.338	.887	.0094	211.	.315	.895	.0079
	1800.	299.	.380	.873	.0127	282.	.356	.881	.0107
	1400.	185.	.293	.902	.0076	173.	.272	.909	.0063
4000	1600.	230.	.322	.893	.0095	215.	.299	.900	.0080
	1800.	277.	.348	.884	.0116	260.	.324	.892	.0097
8.0	2000.	326.	.372	.876	.0138	308.	.348	.884	.0116
	2400.	430.	.416	.861	.0185	407.	.390	.870	.0156
	1750.	247.	.315	.895	.0102	231.	.293	.902	.0085
5000	2000.	305.	.345	.885	.0128	287.	.321	.893	.0107
	2250.	366.	.372	.876	.0155	346.	.347	.884	.0130
7.1	2500.	430.	.397	.868	.0184	407.	.372	.876	.0155
	3000.	564.	.441	.853	.0245	537.	.415	.862	.0208

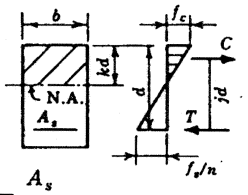

$$p = \frac{A_s}{bd}$$

$$k = \frac{1}{1 + f_s/nf_c} \qquad j = 1 - \tfrac{1}{3}k$$

$$p^* = \frac{f_c}{2f_s} \times k \qquad K = \frac{f_c}{2}kj$$

$$a = \frac{f_s}{12{,}000} \times \text{(av. } j\text{-value)}$$

for use in

$$A_s = \frac{M}{ad} \text{ or } A_s = \frac{NE}{adi}$$

K	k	j	p
f_s = 24,000		a = 1.76	
107.	.269	.910	.0049
133.	.296	.901	.0062
161.	.321	.893	.0075
191.	.345	.885	.0090
253.	.387	.871	.0121
136.	.287	.904	.0063
169.	.315	.895	.0079
204.	.341	.886	.0096
240.	.365	.878	.0114
317.	.408	.864	.0153
199.	.318	.894	.0093
246.	.348	.884	.0116
295.	.375	.875	.0141
347.	.400	.867	.0167
454.	.444	.852	.0222
265.	.341	.886	.0124
326.	.372	.876	.0155
390.	.400	.867	.0187
456.	.425	.858	.0221
595.	.470	.843	.0294
f_s = 33,000		a = 2.48	
86.	.211	.930	.0028
108.	.234	.922	.0036
132.	.256	.915	.0044
157.	.277	.908	.0052
211.	.315	.895	.0072
110.	.226	.925	.0036
138.	.251	.916	.0046
168.	.273	.909	.0056
199.	.295	.902	.0067
267.	.334	.889	.0091
162.	.253	.916	.0054
203.	.279	.907	.0068
246.	.304	.899	.0083
291.	.327	.891	.0099
387.	.368	.877	.0134
218.	.274	.909	.0073
271.	.301	.900	.0091
327.	.326	.891	.0111
386.	.350	.883	.0132
511.	.392	.869	.0178

*"Balanced steel ratio" applies to problems involving bending only.

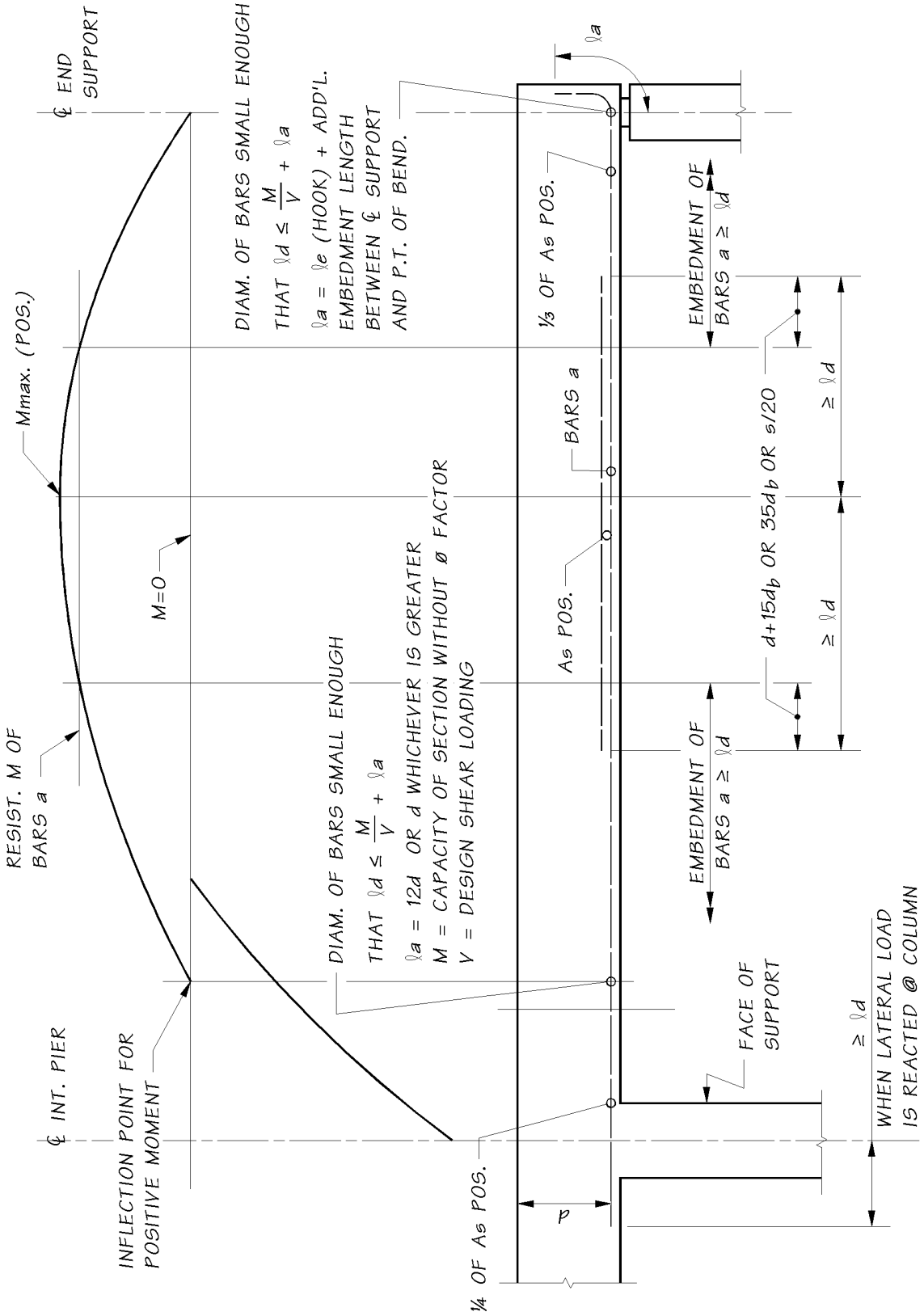
℄ END SUPPORT
DIAM. OF BARS SMALL ENOUGH
THAT ℓd ≤ M/V + ℓa
ℓa = ℓe (HOOK) + ADD'L. EMBEDMENT LENGTH BETWEEN ℄ SUPPORT AND P.T. OF BEND.
ℓa
⅓ OF As POS.
EMBEDMENT OF BARS a ≥ ℓd
Mmax. (POS.)
BARS a
≥ ℓd
M=0
As POS.
d+15db OR 35db OR s/20
≥ ℓd
RESIST. M OF BARS a
DIAM. OF BARS SMALL ENOUGH
THAT ℓd ≤ M/V + ℓa
ℓa = 12d OR d WHICHEVER IS GREATER
M = CAPACITY OF SECTION WITHOUT ø FACTOR
V = DESIGN SHEAR LOADING
EMBEDMENT OF BARS a ≥ ℓd
℄ INT. PIER
INFLECTION POINT FOR POSITIVE MOMENT
FACE OF SUPPORT
≥ ℓd
WHEN LATERAL LOAD IS REACTED @ COLUMN
¼ OF As POS.
p

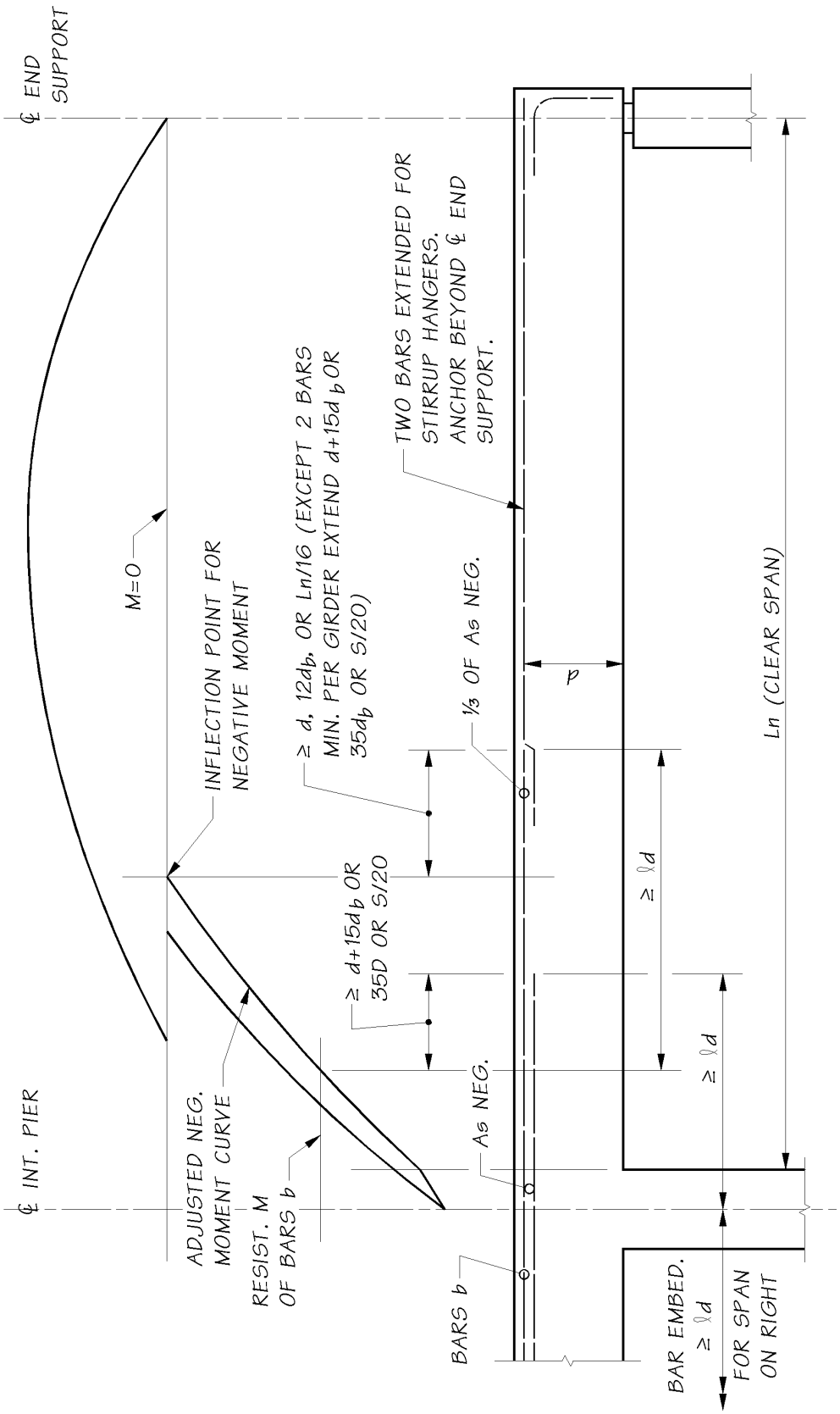
℄ END SUPPORT
M=0
INFLECTION POINT FOR NEGATIVE MOMENT
≥ d, 12db, OR Ln/16 (EXCEPT 2 BARS MIN. PER GIRDER EXTEND d+15db OR 35db OR S/20)
TWO BARS EXTENDED FOR STIRRUP HANGERS. ANCHOR BEYOND ℄ END SUPPORT.
⅓ OF As NEG.
p
Ln (CLEAR SPAN)
≥ ℓd
≥ d+15db OR 35D OR S/20
As NEG.
≥ ℓd
℄ INT. PIER
ADJUSTED NEG. MOMENT CURVE
RESIST. M OF BARS b
BARS b
BAR EMBED. ≥ ℓd
FOR SPAN ON RIGHT

CASE I (DESIGN FOR M AT FACE OF EFFECTIVE SUPPORT) APPLIES TO GIRDERS, BEAMS OR X-BEAMS WHERE THE SUPPORT INCREASES THE DEPTH OF THE BEAM EXCEPT FOR CASES WHERE:

1. THE INCREASE IN DEPTH DUE TO THE SUPPORT IS INSUFICIENT TO RESIST THE MOMENT AT ℄ SUPPORT; THAT IS
   $d℄ < dface \frac{M\ ¼\ PT.}{Mface}$
2. CONTINUOUS BEAMS WHERE ONE-HALF THE LENGTH OF SUPPORT DIVIDED BY THE SPAN IS GREATER THAN 0.1:($\frac{W/2}{SPAN} > 0.1$)

WHERE CASE 1. OR 2. APPLIES USE CASE II.

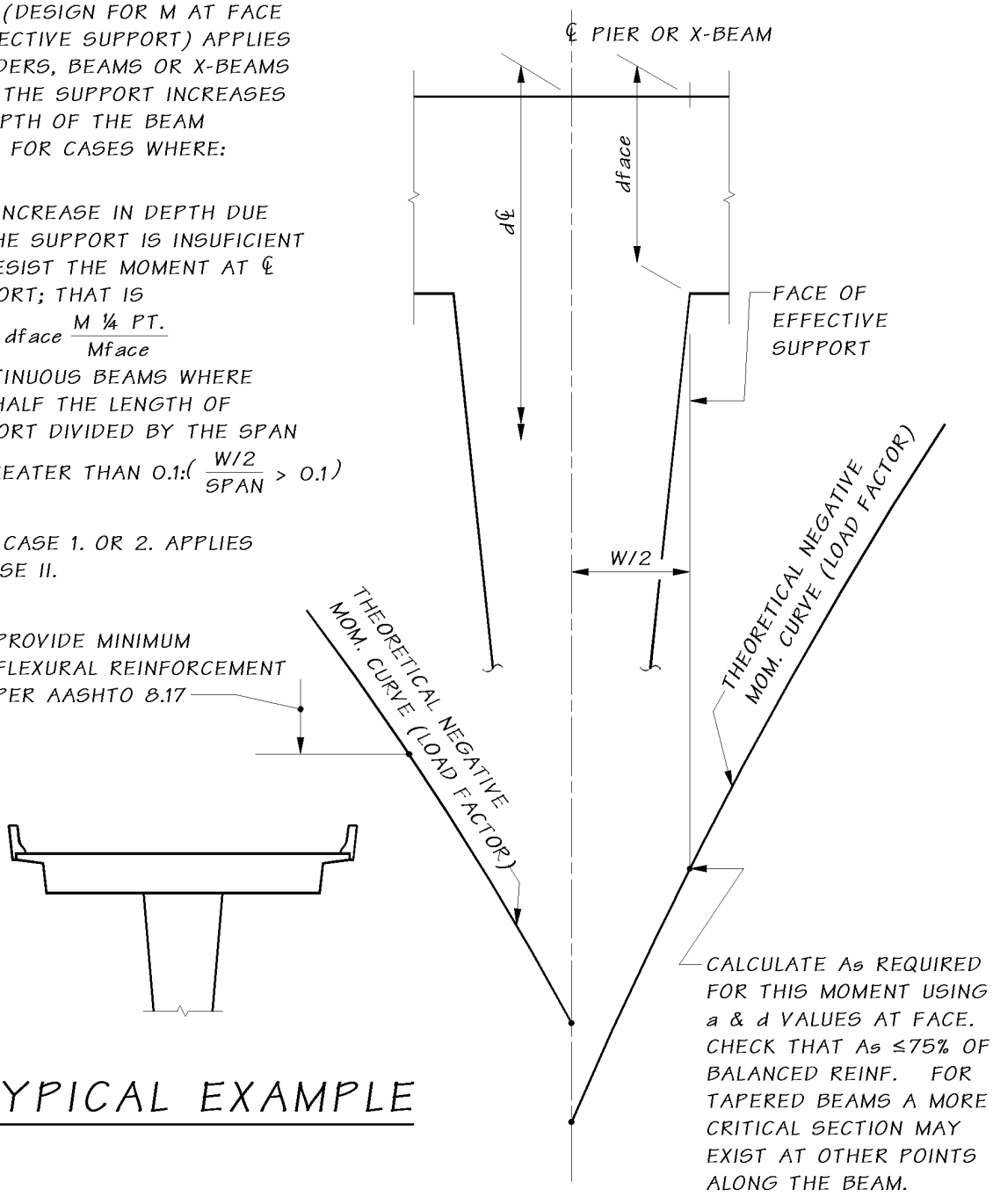

TYPICAL EXAMPLE

CASE II (DESIGN FOR M ½ POINT OF SUPPORT) APPLIES TO GIRDERS, BEAMS, OR X-BEAMS WHERE ONE OF THE FOLLOWING SUPPORT CONDITIONS EXIST:

1. NO INCREASE IN BEAM DEPTH CAN BE ATTRIBUTED TO THE SUPPORT.
2. THE INCREASE IN DEPTH DUE TO THE SUPPORT IS INSUFICIENT TO RESIST THE MOMENT AT ℄ SUPPORT; THAT IS

   $d\text{℄} \leq dface \frac{M\ ¼\ PT.}{Mface}$

3. CONTINUOUS BEAMS WHERE ONE-HALF THE LENGTH OF SUPPORT DIVIDED BY THE SPAN IS GREATER THAN 0.1: $\left(\frac{W/2}{SPAN} > 0.1 \right)$

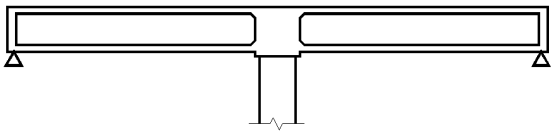

TYPICAL SECTION

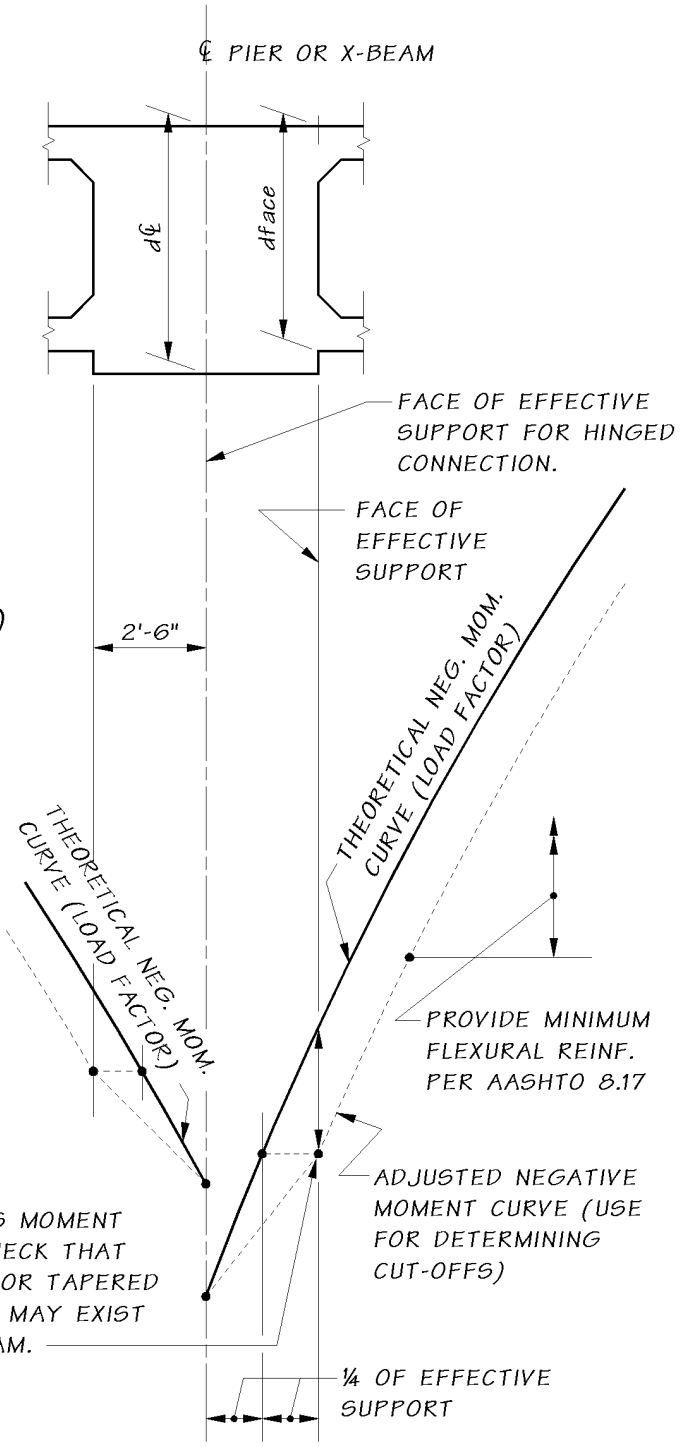

CALCULATE As REQUIRED FOR THIS MOMENT USING a & d VALUES AT FACE. CHECK THAT As ≤ 75% OF BALANCED REINF. FOR TAPERED BEAMS A MORE CRITICAL SECTION MAY EXIST AT OTHER POINTS ALONG THE BEAM.

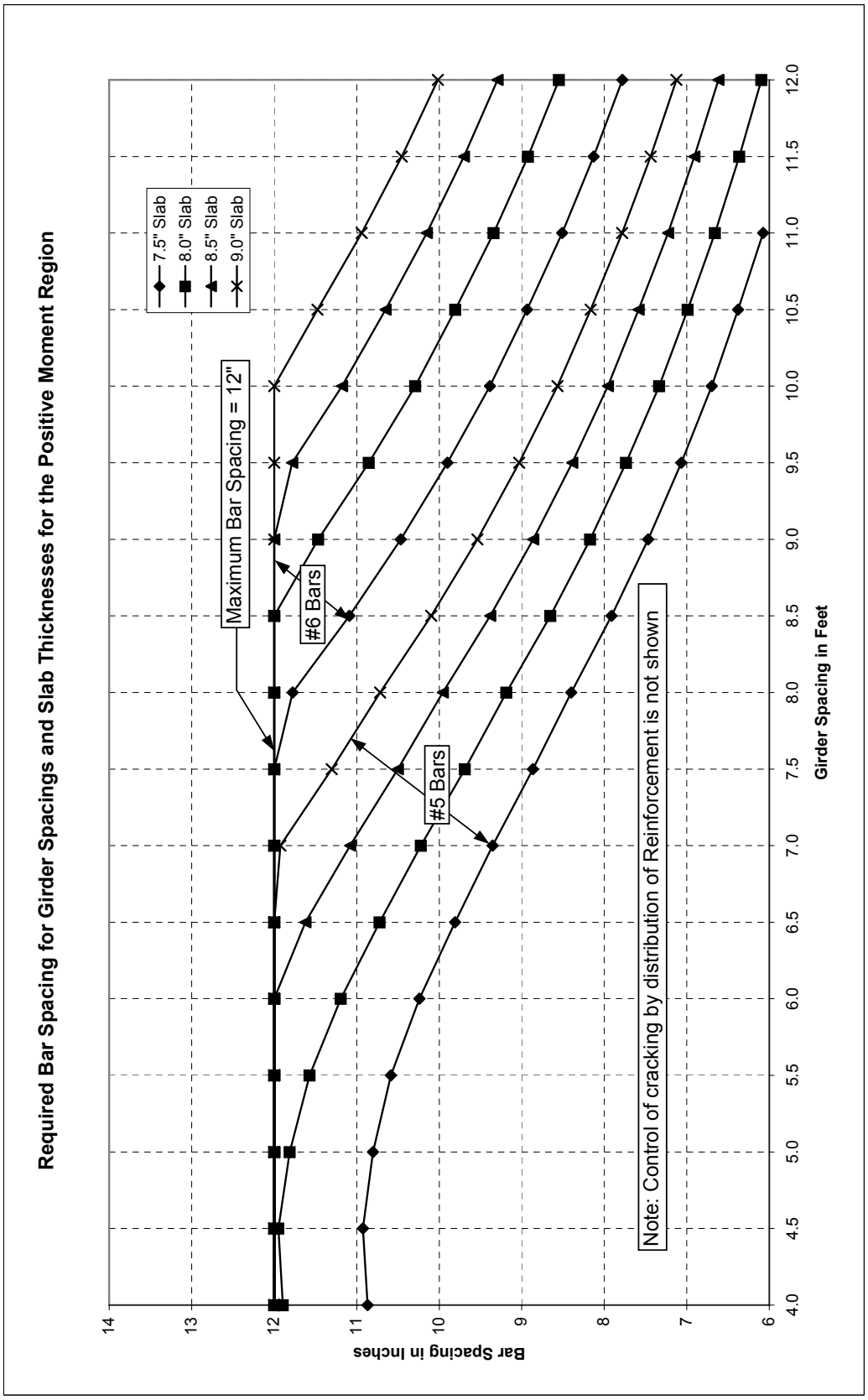
Required Bar Spacing for Girder Spacings and Slab Thicknesses for the Positive Moment Region
7.5" Slab
8.0" Slab
8.5" Slab
9.0" Slab
Maximum Bar Spacing = 12"
#6 Bars
#5 Bars
Note: Control of cracking by distribution of Reinforcement is not shown
Bar Spacing in Inches
Girder Spacing in Feet
14
13
12
11
10
9
8
7
6
4.0
4.5
5.0
5.5
6.0
6.5
7.0
7.5
8.0
8.5
9.0
9.5
10.0
10.5
11.0
11.5
12.0

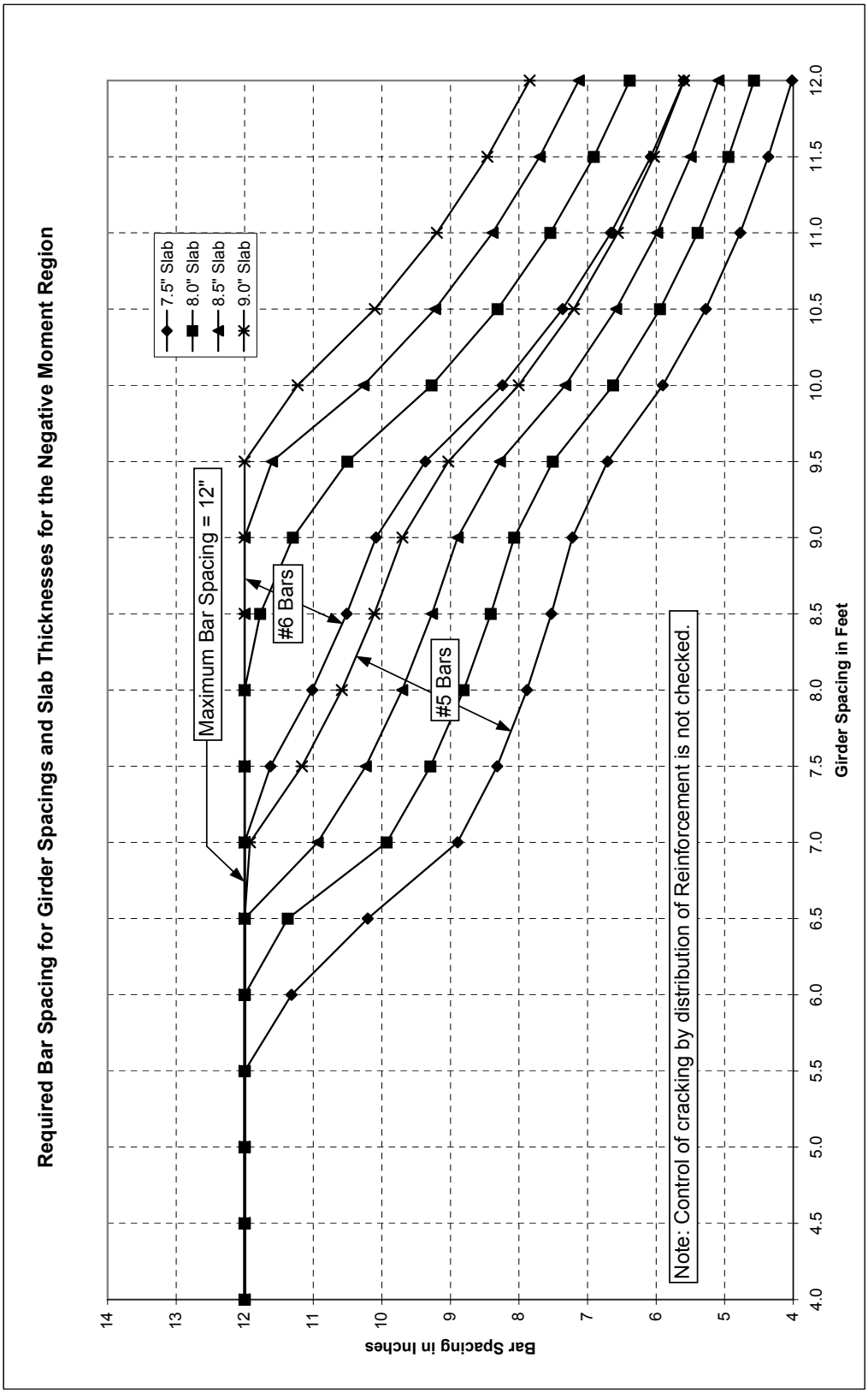
Required Bar Spacing for Girder Spacings and Slab Thicknesses for the Negative Moment Region
Bar Spacing in Inches
Girder Spacing in Feet
7.5" Slab
8.0" Slab
8.5" Slab
9.0" Slab
Maximum Bar Spacing = 12"
#6 Bars
#5 Bars
Note: Control of cracking by distribution of Reinforcement is not checked.
14
13
12
11
10
9
8
7
6
5
4
4.0
4.5
5.0
5.5
6.0
6.5
7.0
7.5
8.0
8.5
9.0
9.5
10.0
10.5
11.0
11.5
12.0

Slab Overhang Required Reinforcement for Vehicle Impact - Interior Barrier Segment - LRFD A13.4.1 Design Case 1

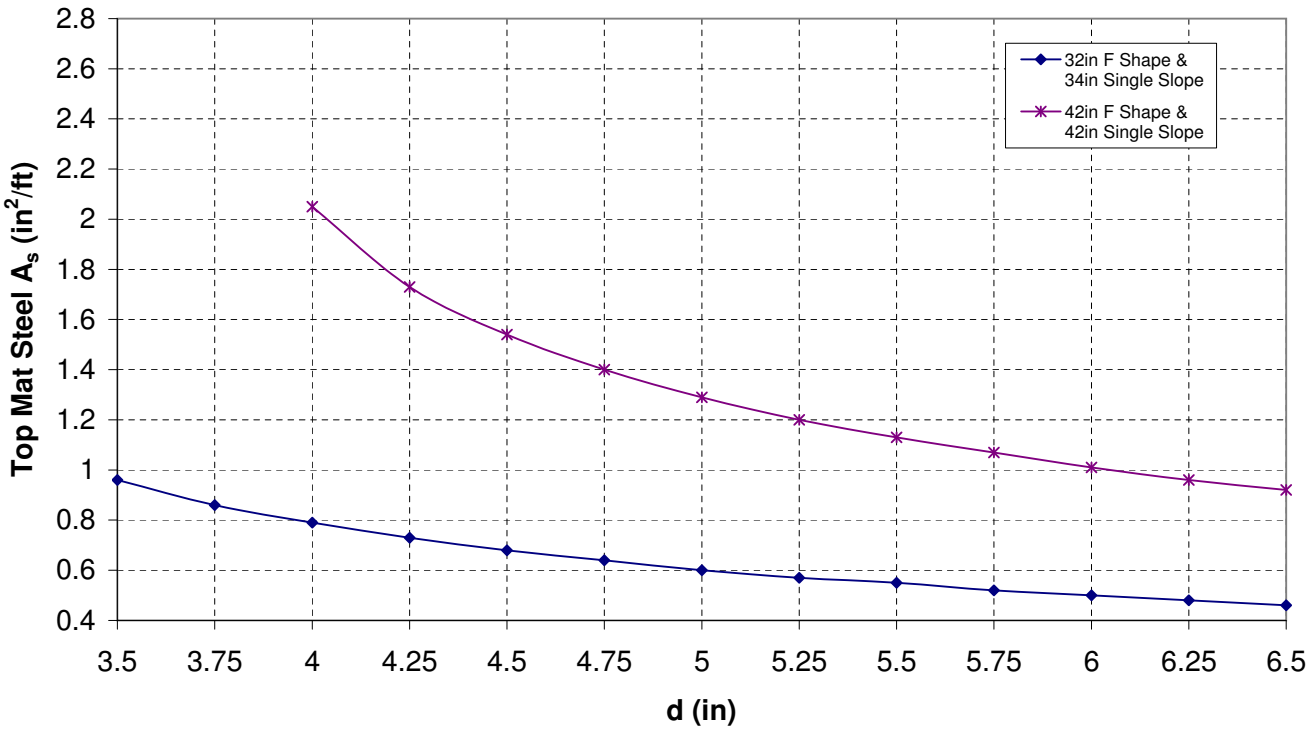

Notes:

1. Top and bottom mats each carry one-half the tension impact load.
2. Only Design Case 1 of LRFD A13.4.1 is considered. Designer must also check Design Cases 2 and 3.
3. Section considered is a vertical section through the slab overhang at the toe of the barrier.

Slab Overhang Required Reinforcement for Vehicle Impact–Interior Barrier Segment–LRFD A13.4.1 Design Case 1

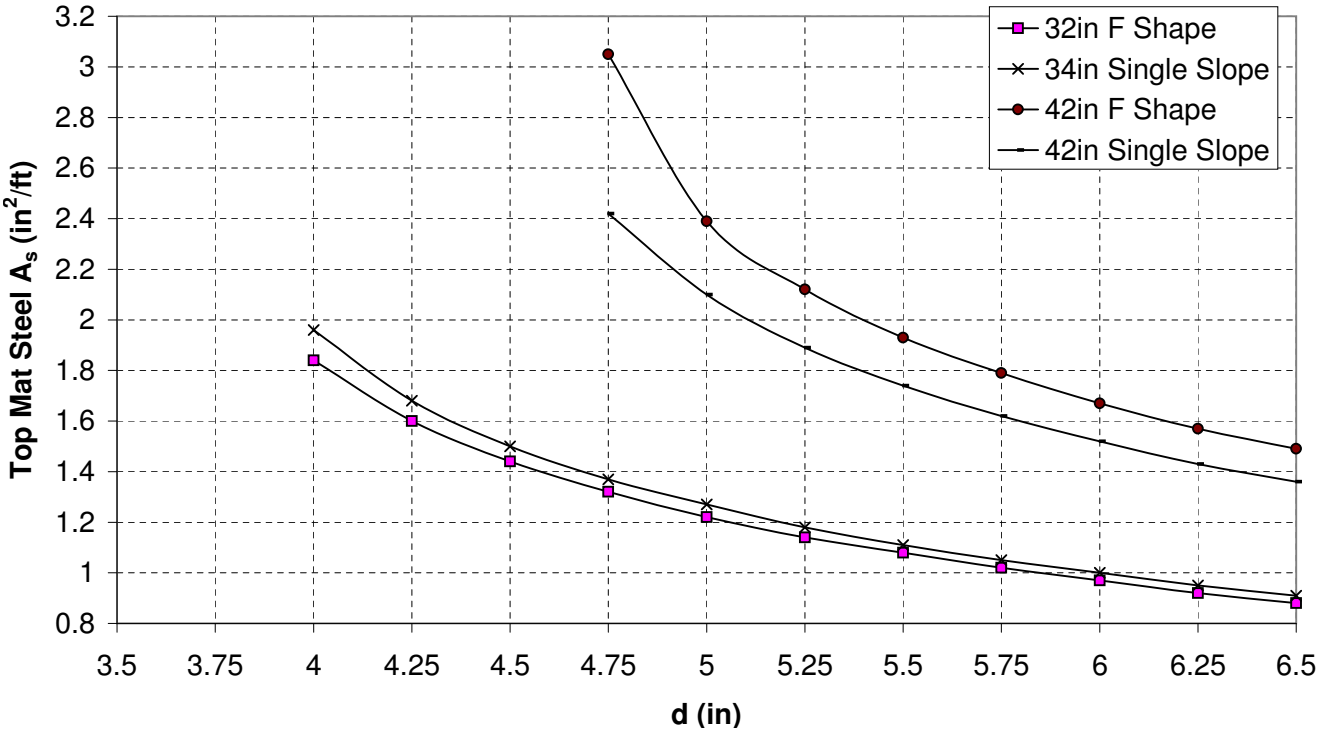

Notes:

1. Top and bottom mats each carry one-half the tension impact load.
2. Only Design Case 1 of LRFD A13.4.1 is considered. Designer must also check Design Cases 2 and 3.
3. Section considered is a vertical section through the slab overhang at the toe of the barrier.

**Slab Overhang Required Reinforcement for Vehicle Impact–
End Barrier Segment–LRFD A13.4.1 Design Case 1**

Appendix 5.6-A1-1 Span Capability of W Girders

Girder Type	Girder Spacing (ft)	CL Bearing to CL Bearing (ft)	"A" Dim. (in)	Deck Thickness (in)	Shipping Weight (kips)
W42G	5	85	10.25	7.50	36
	6	80	10.25	7.50	34
	7	75	10.00	7.50	32
	8	70	10.00	7.50	30
	9	65	9.75	7.50	28
	10	60	9.75	7.75	26
	11	55	10.00	8.25	24
	12	50	10.00	8.50	22
W50G	5	115	11.00	7.50	69
	6	110	11.00	7.50	66
	7	105	10.75	7.50	63
	8	100	10.75	7.50	60
	9	95	10.50	7.50	57
	10	90	10.50	7.75	54
	11	85	10.75	8.00	51
	12	80	11.00	8.50	48
W58G	5	130	11.25	7.50	89
	6	125	11.25	7.50	86
	7	120	11.00	7.50	82
	8	115	11.00	7.50	79
	9	110	11.00	7.50	76
	10	105	10.75	7.50	72
	11	100	11.25	8.00	69
	12	95	11.50	8.50	66
W74G	5	150	11.00	7.50	127
	6	145	11.00	7.50	123
	7	140	11.25	7.50	119
	8	135	11.00	7.50	114
	9	130	11.00	7.50	110
	10	125	11.00	7.50	106
	11	120	11.25	7.75	102
	12	115	11.25	8.00	98

Design Parameters:

- PGSuper version 2.2.3.0
- Girder f'_{ci} = 7.5 ksi, f'_c = 9.0 ksi
- Slab f'_c = 4.0 ksi
- No horizontal or vertical curve
- 2 percent roadway crown slope
- Standard WSDOT "F" shape barrier
- 6 percent roadway superelevation for shipping check
- Standard WSDOT Abutment End Type A
- Includes 2″ future HMA overlay with density of 140 pcf

Appendix 5.6-A1-2 Span Capability of WF Girders

Girder Type	Girder Spacing (ft)	CL Bearing to CL Bearing (ft)	"A" Dim. (in)	Deck Thickness (in)	Shipping Weight (kips)
WF36G	5	105	11.25	7.50	83
	6	100	11.25	7.50	79
	7	95	11.25	7.50	76
	8	95	11.25	7.50	76
	9	90	11.25	7.50	72
	10	85	11.25	7.50	68
	11	85	11.00	7.50	68
	12	80	11.00	8.00	64
WF42G	5	120	11.25	7.50	100
	6	115	11.25	7.50	96
	7	110	11.50	7.50	92
	8	105	11.25	7.50	88
	9	100	11.25	7.50	84
	10	95	11.25	7.50	80
	11	90	11.25	7.50	75
	12	90	11.50	8.00	75
WF50G	5	140	11.00	7.50	124
	6	135	11.25	7.50	119
	7	125	11.25	7.50	111
	8	120	11.50	7.50	107
	9	115	11.25	7.50	102
	10	110	11.25	7.50	98
	11	110	11.25	7.50	98
	12	105	11.50	8.00	94
WF58G	5	155	10.75	7.50	145
	6	150	11.00	7.50	141
	7	145	11.25	7.50	136
	8	140	11.25	7.50	132
	9	135	11.25	7.50	127
	10	130	11.25	7.50	122
	11	120	11.25	7.50	113
	12	120	11.50	8.00	113
WF66G	5	165	10.75	7.50	164
	6	160	10.75	7.50	159
	7	155	11.00	7.50	154
	8	150	11.25	7.50	149
	9	145	11.25	7.50	144
	10	140	11.50	7.50	139
	11	135	11.25	7.50	135
	12	130	11.75	8.00	130
WF74G	5	175	10.50	7.50	183
	6	170	10.75	7.50	178
	7	165	11.00	7.50	173
	8	160	11.00	7.50	168
	9	155	11.25	7.50	163
	10	150	11.25	7.50	157
	11	145	11.25	7.50	152

	12	140	11.75	8.00	147
WF83G	5	190	10.00	7.50	210
	6	185	10.50	7.50	204
	7	180	10.50	7.50	199
	8	170	10.75	7.50	188
	9	165	11.00	7.50	183
	10	160	11.00	7.50	177
	11	155	11.00	7.50	172
	12	150	11.50	8.00	166
WF95G	5	190	9.50	7.50	226
	6	185	9.75	7.50	220
	7	175	10.25	7.50	208
	8	175	10.50	7.50	208
	9	170	10.75	7.50	202
	10	165	10.75	7.50	196
	11	160	11.00	7.50	191
	12	155	11.25	8.00	185
WF100G	5	205	9.50	7.50	251
	6	200	10.00	7.50	245
	7	195	10.00	7.50	239
	8	185	10.25	7.50	227
	9	180	10.50	7.50	221
	10	175	10.50	7.50	215
	11	170	10.50	7.50	209
	12	165	11.25	8.00	203

Design Parameters:

- PGSuper Version 2.2.3.0
- Girder f'ci = 7.5 ksi, f'c = 9.0 ksi
- Slab f'c = 4.0 ksi.
- No vertical or horizontal curve
- 2% roadway crown slope
- Standard WSDOT "F" shape barrier
- 6% roadway superelevation for shipping check
- Standard WSDOT Abutment End Type A
- Includes 2" future HMA overlay with density of 140 pcf

Girder Type	Girder Width (ft)	CL Bearing to CL Bearing (ft)	Excess Camber (in)
W35DG	4	95	4.38
	5	90	3.98
	6	85	3.82
W41DG	4	110	4.34
	5	105	4.50
	6	100	4.33
W53DG	4	135	4.29
	5	130	4.51
	6	120	4.51
W65DG	4	155	3.46
	5	145	3.71
	6	140	3.97

Design Parameters:

- PGSuper version 2.2.3.0
- Girder f'_{ci} = 7.5 ksi, f'_c = 9.0 ksi
- Slab f'_c = 4.0 ksi
- No horizontal or vertical curve
- 2% roadway crown slope
- Standard WSDOT "F" shape barrier
- 6% roadway superelevation for shipping check
- Standard WSDOT Abutment End Type A
- Includes 2″ future HMA overlay with density of 140 pcf

Girder Type	Girder Spacing (ft)	CL Bearing to CL Bearing (ft)	"A" Dim. (in)	Shipping Weight (kips)
WF36TDG	5	120	8.00	102
	6	110	8.25	98
	7	105	8.50	98
	8	100	8.75	98
WF42TDG	5	135	7.75	120
	6	130	8.25	121
	7	120	8.50	117
	8	115	8.75	117
WF50TDG	5	155	7.25	146
	6	150	8.00	148
	7	140	8.50	144
	8	135	8.75	145
WF58TDG	5	180	6.25	180
	6	165	7.50	172
	7	160	8.25	173
	8	150	8.50	169
WF66TDG	5	195	5.75	206
	6	185	7.00	203
	7	175	8.00	200
	8	165	8.50	196
WF74TDG	5	210	5.50	234
	6	200	6.50	231
	7	190	7.50	228
	8	180	8.25	224
WF83TDG	5	225	5.25	265
	6	220	5.75	268
	7	210	7.00	265
	8	200	8.00	261
WF95TDG	5	200	5.25	253
	6	205	6.00	268
	7	200	7.00	270
	8	190	7.75	265
WF100TDG	5	190	5.50	247
	6	200	6.25	270
	7	195	6.25	270
	8	190	7.00	263

Design Parameters:

- PGSuper Version 2.8.0
- Girder f'ci = 7.5 ksi, f'c = 9.0 ksi
- 1/2 D40 ≥ C
- Shipping weight < 270 kip
- Slab f'c = 4.0 ksi.
- No vertical or horizontal curve
- 2% roadway crown slope
- Standard WSDOT "F" shape barrier
- 6% roadway superelevation for shipping check
- Standard WSDOT Abutment End Type A
- Includes 2" future HMA overlay with density of 140 pcf

Girder Type	Girder Spacing (ft)	CL Bearing to CL Bearing (ft)	Shipping Weight (kips)
WF39DG	5	115	122
	6	110	126
	7	100	123
	8	100	131
WF45DG	5	130	143
	6	125	148
	7	115	146
	8	105	142
WF53DG	5	145	167
	6	140	173
	7	130	172
	8	125	176
WF61DG	5	160	193
	6	155	200
	7	145	200
	8	135	198
WF69DG	5	170	215
	6	165	223
	7	155	222
	8	150	228
WF77DG	5	185	244
	6	180	253
	7	175	261
	8	165	260
WF86DG	5	195	270
	6	180	264
	7	170	264
	8	160	262
WF98DG	5	180	265
	6	170	265
	7	160	263
	8	155	268
WF103DG	5	175	264
	6	165	263
	7	160	269
	8	150	264

Design Parameters:

- PGSuper Version 2.8.0
- Girder f'ci = 7.5 ksi, f'c = 9.0 ksi
- 1/2 D40 ≥ C
- Shipping weight < 270 kip
- No vertical or horizontal curve
- 2% roadway crown slope
- Standard WSDOT "F" shape barrier
- 6% roadway superelevation for shipping check
- Standard WSDOT Abutment End Type A
- 1½" concrete overlay

Girder Type	Girder Spacing (ft)	CL Bearing to CL Bearing (ft)	"A" Dim. (in)	Deck Thickness (in)	Shipping Weight (kips)
U54G4	8	130	8.25	7.50	153
	10	125	8.25	7.50	147
	12	120	8.50	7.50	142
	14	115	8.50	7.50	136
U54G5	9	130	8.25	7.50	164
	11	125	8.50	7.50	158
	13	120	8.75	7.50	151
	15	115	8.50	7.50	145
U66G4	8	150	8.25	7.50	205
	10	145	8.25	7.50	198
	12	140	8.25	7.50	192
	14	130	8.50	7.50	178
U66G5	9	150	8.25	7.50	217
	11	145	8.25	7.50	210
	13	140	8.25	7.50	203
	15	135	8.50	7.50	196
U78G4	8	170 #	8.25	7.50	264
	10	160	8.25	7.50	249
	12	155	8.25	7.50	242
	14	145	8.50	7.50	226
	16	135	9.00	8.00	211
U78G5	9	170 #	8.25	7.50	278
	11	165 #	8.25	7.50	270
	13	160 #	8.25	7.50	262
	15	155 #	8.25	7.50	254
	17	150	8.75	8.00	246

Span capability exceeds maximum shipping weight of 252 kips

Design Parameters:

- PGSuper Version 2.2.3.0
- Girder f'ci = 7.5 ksi, f'c = 9.0 ksi
- Slab f'c = 4.0 ksi.
- No vertical or horizontal curve
- 2% roadway crown slope
- Standard WSDOT "F" shape barrier
- 6% roadway superelevation for shipping check
- Standard WSDOT Abutment End Type A
- Includes 2" future HMA overlay with density of 140 pcf

Span Capability of Trapezoidal Tub Girders with Top Flange

Girder Type	Girder Spacing (ft)	CL Bearing to CL Bearing (ft)	"A" Dim. (in)	Deck Thickness (in)	Shipping Weight (kips)
UF60G4	9	150	9.25	8.50	205
	11	140	9.50	8.50	192
	13	135	9.75	8.50	185
	15	130	10.00	8.50	178
UF60G5	10	150	9.25	8.50	217
	12	145	9.25	8.50	210
	14	140	9.75	8.50	203
	16	135	9.75	8.50	196
UF72G4	9	160	9.25	8.50	249
	11	150	9.50	8.50	234
	13	145	9.75	8.50	226
	15	140	9.75	8.50	218
UF72G5	10	170 #	9.25	8.50	278
	12	160 #	9.25	8.50	262
	14	155 #	9.50	8.50	254
	16	150	9.50	8.50	246
UF84G4	10	180 #	9.25	8.50	314
	12	170 #	9.25	8.50	297
	14	165 #	9.50	8.50	288
	16	160 #	9.75	8.50	280
UF84G5	11	180 #	9.25	8.50	329
	13	175 #	9.25	8.50	320
	15	165 #	9.50	8.50	302
	17	160 #	9.50	8.50	293

Span capability exceeds maximum shipping weight of 252 kips

Design Parameters:

- PGSuper version 2.2.3.0
- Girder f'_{ci} = 7.5 ksi, f'_c = 9.0 ksi
- CIP slab f'_c = 4.0 ksi
- No horizontal or vertical curve
- 2 percent roadway crown slope
- Standard WSDOT "F" shape barrier
- 6 percent roadway superelevation for shipping check
- Standard WSDOT Abutment End Type A
- Includes 2″ future HMA overlay with density of 140 pcf
- Deck includes a 3.5″ SIP panel with a 5″ CIP slab

f'ci = 6.0 ksi, f'c = 9 ksi Strand diameter = 0.6" Grade 270 ksi low relaxation												
Girder Type	Girder Spacing (ft)	Span Length (ft)	Cast-in-place Closures	PT Ducts - Strands/Duct (Duct#4 @ Bottom)				Jacking Force** (kips)	Tendon Force after Seating** (kips)	Tendson Loss* (kips)	E1 (in)	E3 (in)
			Length (ft)	1	2	3	4					
WF74PTG Post-tensioned Before Slab Casting	6	170	2	-	22	22	22	2970	2680	730	36.4	12.7
	8	155	2	-	22	22	22	2970	2670	740	36.4	12.7
	10	140	2	-	22	22	22	2970	2650	760	36.4	12.7
	12	120	2	-	22	22	22	2970	2630	780	36.4	12.7
	14	100	2	-	22	22	22	2970	2590	815	36.4	12.7
WF74PTG Post-tensioned After Slab Casting	6	195	2	-	22	22	22	2960	2690	680	36.4	12.7
	8	185	2	-	22	22	22	2960	2710	680	36.4	12.7
	10	175	2	-	22	22	22	2960	2690	690	36.4	12.7
	12	165	2	-	22	22	22	2990	2720	700	36.4	12.7
	14	155	2	-	22	22	22	3020	2750	710	36.4	12.7
WF83PTG Post-tensioned Before Slab Casting	6	185	2	11	22	22	22	3500	3160	850	33.8	14.5
	8	165	2	-	22	22	22	2985	2710	720	36.4	12.7
	10	155	2	-	22	22	22	2985	2700	730	36.4	12.7
	12	135	2	-	22	22	22	2985	2680	740	36.4	12.7
	14	115	2	-	22	22	22	2985	2620	810	33.8	12.7
WF83PTG Post-tensioned After Slab Casting	6	*205	2	11	22	22	22	3500	3200	810	33.8	14.5
	8	200	2	11	22	22	22	3500	3210	800	37.6	14.5
	10	195	2	22	22	22	22	4000	3640	940	37.6	15.7
	12	185	2	22	22	22	22	4000	3640	940	37.6	15.7
	14	175	2	22	22	22	22	4000	3640	940	37.6	15.7
WF95PTG Post-tensioned Before Slab Casting	6	200	2	11	22	22	22	3500	3150	860	46.1	14.5
	8	185	2	11	22	22	22	3500	3110	980	46.1	14.5
	10	175	2	11	22	22	22	3500	3130	880	46.1	14.5
	12	155	2	8	22	22	22	3360	2990	860	44.9	14.1
	14	135	2	-	22	22	22	3000	2630	810	59.0	12.7
WF95PTG Post-tensioned After Slab Casting	6	235	2	11	22	22	22	3500	3210	800	46.1	14.5
	8	230	2	22	22	22	22	4000	3650	930	37.6	15.7
	10	215	2	22	22	22	22	4000	3640	940	37.6	15.7
	12	205	2	22	22	22	22	4000	3640	950	37.6	15.7
	14	190	2	22	22	22	22	4000	3630	960	37.6	15.7

* Controlled by over-reinforced section (see LRFD Sec. 5.7.3.3)

** Total force calculated at jacking end of post-tensioned girder (rounded to the nearest 10)

Design Parameters:

- PGSplice V. 0.3
- WSDOT BDM LRFD design criteria
- No vertical or horizontal curve
- 2.0 percent roadway crown slope
- Interior girder with barrier load (6 girder bridge)
- Only flexural service and strength checked; lifting and hauling checks not necessarily satisfed
- Simple girder span lengths are CL bearing to CL bearing
- Slab f'_c = 4.0 ksi
- Standard WSDOT “F” shape barrier
- Under normal exposure condition and 75 percent relative humidity
- Spans reported in 5′-0″ increments
- Designs based on “normally” reinforced sections (c/de < 0.42 LRFD 5.7.3.3)
- Designs based on 22 strands/duct
- For 6′-10′ girder spacing -- 7.5″ slab
- For 12′ girder spacing -- 8.0″ slab
- For 14′ girder spacing -- 8.75″ slab
- Girders post-tensioned before slab pour are assumed to be post-tensioned adjacent to structure.
- All spec checks at wet joints have been ignored. It isassumed that the designer can modify the wet joints to reach the required span as shown in the table. These modifcations are outside the scope of this table.

Span Capability of Post-tensioned Spliced Tub Girders

Girder Type	Girder Spacing (ft)	Span Length (ft)	End Segments	Middle Segment	Spliced Post-tensioned Girder								
			No. of Straight Strands	No. of Straight Strands	PT Ducts ~ Strands/Duct (Duct #4 @ Bottom)				Jacking Force* (kips)	Tendon Force after Seating* (kips)	Tendon Loss* (kips)	E1 (in)	E3 (in)
					1	2	3	4					
U54PTG4	8	135	4	6	-	-	11	22	2904	2636	570	20.0	8.9
	14	150	4	14	-	2	22	22	4048	3708	760	31.5	10.1
U54PTG5	9	135	4	8	-	-	12	22	2992	2764	578	19.7	9.0
	15	150	4	14	-	6	22	22	4400	4032	826	29.8	10.9
U54PTG6	10	135	4	6	-	-	18	22	3520	3200	684	18.3	9.5
	16	145	4	14	-	8	22	22	4576	4196	852	29.0	11.2
U66PTG4	8	155	4	8	-	-	15	22	3256	2944	648	18.9	9.3
	14	170	4	16	-	7	22	22	4488	4088	864	29.4	11.0
U66PTG5	9	155	4	8	-	-	17	22	3432	3110	678	18.5	9.4
	15	170	4	16	-	10	22	22	4752	4334	910	29.3	11.3
U66PTG6	10	155	4	8	-	-	21	22	3784	3434	742	17.7	9.7
	16	165	4	14	-	12	22	22	4928	4500	940	27.7	11.7
U78PTG4	8	175	4	10	-	-	19	22	3608	3262	722	18.1	9.6
	16	190	4	20	-	15	22	22	5192	4718	1014	26.8	12.1
U78PTG5	9	180	4	10	-	2	22	22	4048	3692	776	31.5	10.1
	17	195	4	22	-	21	22	22	5720	5202	1110	25.2	12.6
U78PTG6	10	180	4	10	-	6	22	22	4400	4018	840	29.8	10.9
	18	190#	4	20	2	22	22	22	5896	5400	1104	395.0	12.9

Total force calculated at jacking end of post-tensioned girder
Span capability exceeds maximum shipping weight of 200 kips

Design Parameters:

- PGSplice V. 0.3
- WSDOT BDM LRFD design criteria
- No vertical or horizontal curve
- 2.0 percent roadway crown slope
- Interior girder with barrier load (6 girder bridge)
- Only flexural service and strength checked; lifting and hauling checks not necessarily satisfied
- Simple girder span lengths are CL bearing to CL bearing
- Standard WSDOT “F” shape barrier
- Under normal exposure condition and 75 percent humidity
- Spans reported in 5′-0″ increments
- “A” dimension = deck thickness + 2″
- Closure pour for spliced girders is 2′, f'_{ci} = 6.0 ksi, f'_c = 9 ksi
- Girder f'_{ci} = 6.0 ksi, f'_c = 9.0 ksi, slab f'_c = 4.0 ksi
- Girders are spliced in-place after slab is cast
- Prestressing and post-tensioning steel is 0.6″ diameter, Grade 270
- End segments are 25 percent of total length; center segment is 50 percent of total length
- Range of applicability requirements in LRFD ignored; span lengths may be longer than allowed by LRFD
- Designs are based on a 22 diameter strand limit per 4″ duct for high pressure grout
- All spec checks at wet joints have been ignored. It is assumed that the designer can modify the wet joints to reach the required span as shown in the table. These modifications are outside the scope of this table.

Introduction

The slab haunch is the distance between the top of a girder and the bottom of the roadway slab. The haunch varies in depth along the length of the girder accommodating the girder camber and geometric effects of the roadway surface including super elevations, vertical curves and horizontal curves.

The basic concept in determining the required "A" dimension is to provide a haunch over the girder such that the top of the girder is not less than the fillet depth (typically ¾″) below the bottom of the slab at the center of the span. This provides that the actual girder camber could exceed the calculated value by 1¾″ before the top of the girder would interfere with the bottom mat of slab reinforcement.

It is desirable to have points of horizontal and vertical curvature and super elevation transitions off the bridge structure as this greatly simplifies the geometric requirements on the slab haunch. However, as new bridges are squeezed into the existing infrastructure it is becoming more common to have geometric transitions on the bridge structure.

Each geometric effect is considered independently of the others. The total geometric effect is the algebraic sum of each individual effect.

Fillet Effect

The distance between the top of the girder and the top of the roadway surface, must be at least the thickness of the roadway slab plus the fillet depth.

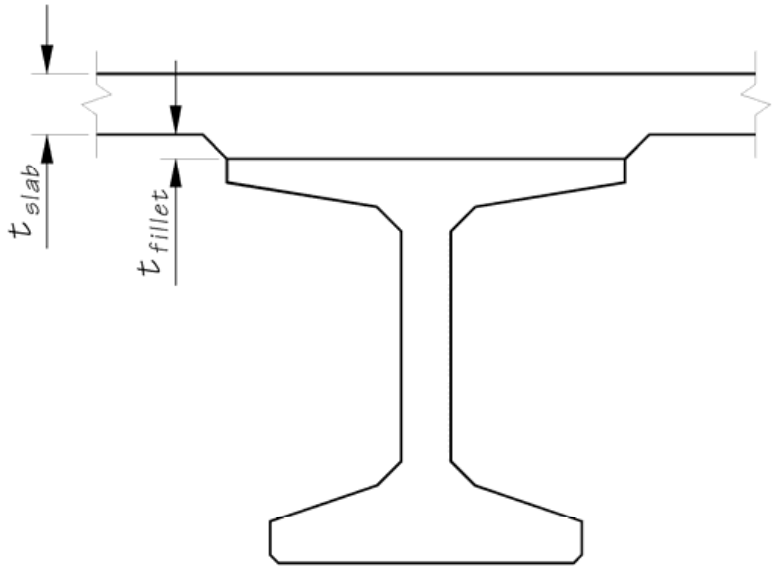

$$\Delta_{deck} = t_{slab} + t_{fillet}$$

Excessive Camber Effect

The girder haunch must be thickened to accommodate any camber that remains in the girder after slab casting. This is the difference between the "D" and "C" dimensions from the Girder Schedule Table. Use a value of 2½″ at the preliminary design stage to determine vertical clearance.

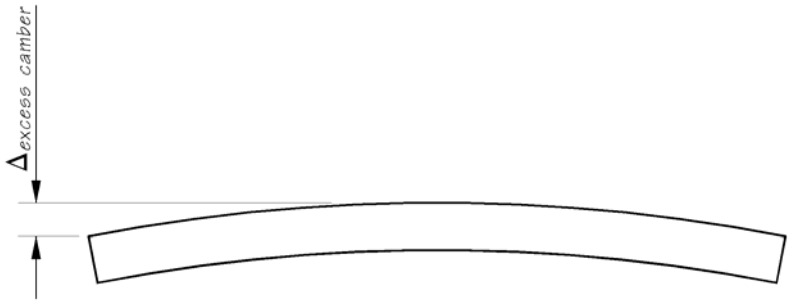

Profile Effect

The profile effect accounts for changes in the roadway profile along the length of the girder. Profile changes include grade changes, vertical curve effects, and offset deviations between the centerline of girder and the alignment caused by flared girders and/or curvature in the alignment.

When all of the girders in a span are parallel and the span is contained entirely within the limits of a vertical and/or horizontal curve, the profile effect is simply the sum of the Vertical Curve Effect and the Horizontal Curve Effect.

$$\Delta_{profile\ effect} = \Delta_{vertical\ curve\ effect} + \Delta_{horizontal\ curve\ effect} \quad \text{(5-B1.1)}$$

The horizontal curve effect is, assuming a constant super elevation rate along the length of the span,

$$\Delta_{horizontal\ curve\ effect} = \frac{1.5S^2m}{R} \quad \text{(5-B1.2)}$$

Where:

S = The length of curve in feet
R = The radius of the curve in feet
m = The crown slope

The horizontal curve effect is in inches.

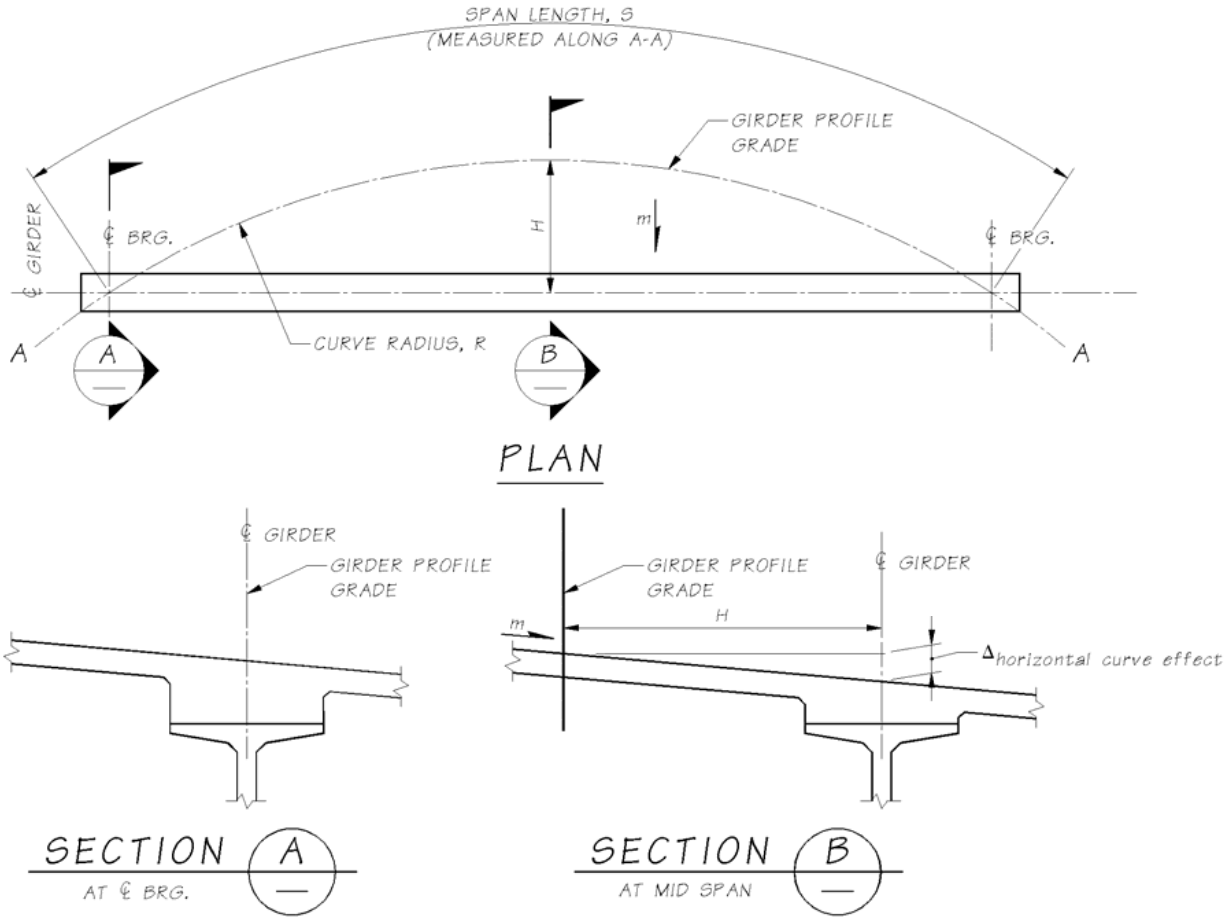

$$\Delta = \frac{S}{R} \tag{5-B1.3}$$

$$\phi = \frac{\Delta}{R} \tag{5-B1.4}$$

$$\phi = \frac{S}{4R} \tag{5-B1.5}$$

$$tan\phi \approx \phi \tag{5-B1.6}$$

$$tan\phi \approx \frac{2H}{S} \tag{5-B1.7}$$

$$H = \frac{S}{2} tan\phi \approx \frac{S}{2}\phi = \frac{S}{2} \times \frac{S}{4R} = \frac{S^2}{8R} \tag{5-B1.8}$$

$$\Delta_{horizontal\ curve\ effect} = \frac{S^2}{8R} m \times 12\frac{in}{ft} = \frac{1.5S^2}{R} m\ (inches) \tag{5-B1.9}$$

The vertical curve effect is

$$\Delta_{vertical\ curve\ effect} = \frac{1.5GL_g^2}{100L} m\ (inches) \quad \text{(5-B1.10)}$$

Where:

G = The algebraic difference in profile tangent grades $G = g_2 - g_1$ (%)
L_g^2 = The girder length in feet
L = The vertical curve length in feet

The vertical curve effect is in inches and is positive for sag curves and negative for crown curves.

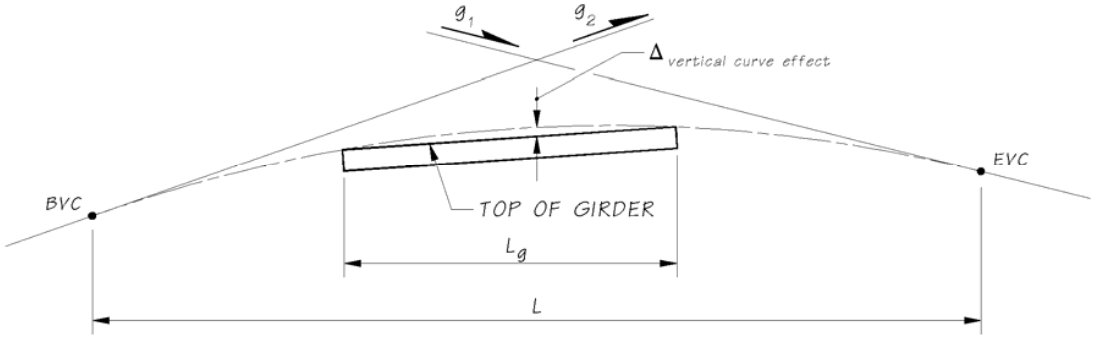

$$K = \frac{100G}{2L} \quad \text{(5-B1.11)}$$

$$\Delta_{vertical\ curve\ effect} = K\frac{L_g^2}{40{,}000} \times 12\frac{in}{ft} = \frac{G}{2L} \times \frac{L_g^2}{400} \times 12 = \frac{1.5GL_g^2}{100L} \quad \text{(5-B1.12)}$$

If one or more of the following roadway geometry transitions occur along the span, then a more detailed method of computation is required:

- Change in the super elevation rate
- Grade break
- Point of horizontal curvature
- Point of vertical curvature
- Flared girders

The exact value of the profile effect may be determined by solving a complex optimization problem. However it is much easier and sufficiently accurate to use a numerical approach.

The figure below, while highly exaggerated, illustrates that the profile effect is the distance the girder must be placed below the profile grade so that the girder, ignoring all other geometric effects, just touches the lowest profile point between the bearings.

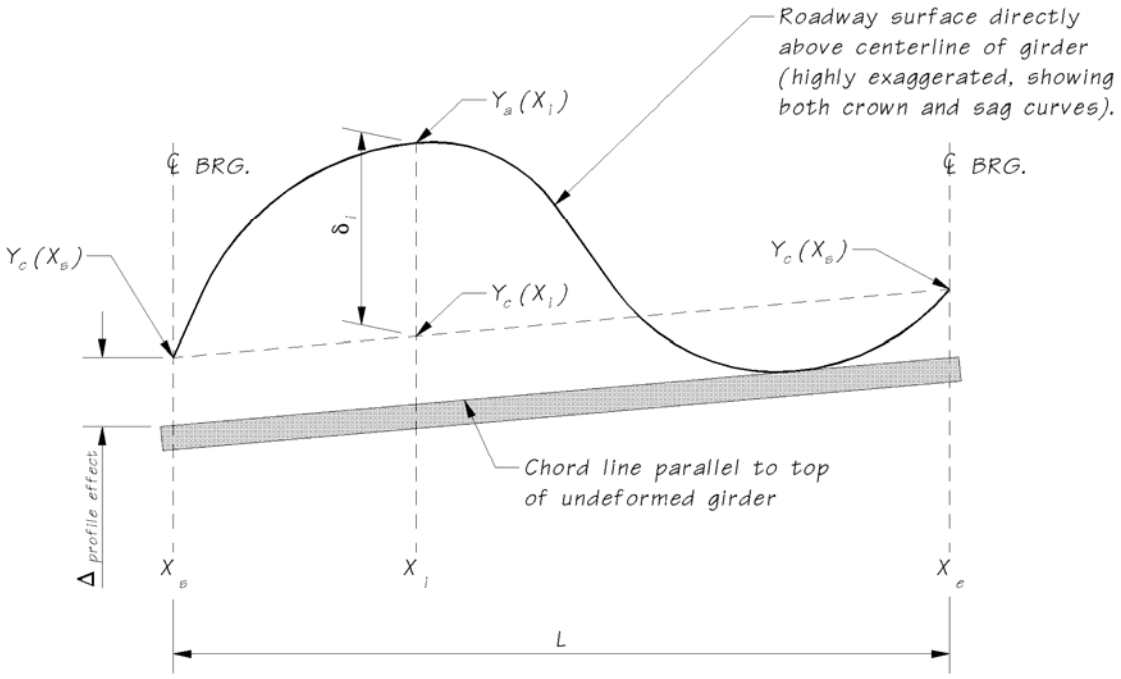

In the case of a crown curve the haunch depth may reduced. In the case of a sag curve the haunch must be thickened at the ends of the girder.

To compute the profile effect:

1. Create a chord line parallel to the top of the girder (ignoring camber) connecting the centerlines of bearing. The equation of this line is

$$y_c(x_i) = y_a(x_s, z_s) + (x_i - x_s)\left(\frac{y_a(x_e, z_e) - y_a(x_s, z_s)}{x_e - x_s}\right) \quad \text{(5-B1.13)}$$

Where:

x_i	=	Station where the elevation of the chord line is being computed
x_s	=	Station at the start of the girder
x_e	=	Station at the end of the girder
z_s	=	Normal offset from alignment to centerline of the girder at the start of the girder at station x_s
z_e	=	Normal offset from the alignment to the centerline of the girder at the end of the girder at station x_e
$y_a(x_s, z_s)$	=	Elevation of the roadway profile at station x_s and offset z_s
$y_a(x_e, z_e)$	=	Elevation of the roadway profile at station x_e and offset z_e
$y_c(x_i)$	=	Elevation of the chord line at station x_i

2. At 10th points along the span, compute the elevation of the roadway surface directly above the centerline of the girder, $y_a(x_i,z_i)$, and the elevation of the line paralleling the top of the girder, $y_c(x_i)$. The difference in elevation is the profile effect at station x_i,

$$\Delta_{profile\ effect@i} = y_c(x_i) - y_a(x_i, z_i) \quad \text{(5-B1.14)}$$

Girder Orientation Effect

The girder orientation effect accounts for the difference in slope between the roadway surface and the top of the girder. Girders such as I-beams are oriented with their Y axis plumb. Other girders such as U-beam, box beam, and slabs are oriented with their Y axis normal to the roadway surface. The orientation of the girder with respect to the roadway surface, and changes in the roadway surface along the length of the girder (super elevation transitions) define the Girder Orientation Effect.

If the super elevation rate is constant over the entire length of the span and the Y-axis of the girder is plumb, the girder orientation effect simplifies to the Top Width Effect,

$$\Delta_{girder\ orientation\ effect} = \Delta_{top\ width\ effect} = m\left(\frac{W_{top}}{2}\right) \qquad \text{(5-B1.15)}$$

If the super elevation rate varies along the span, the girder orientation effect may be computed at 10th points using this equation.

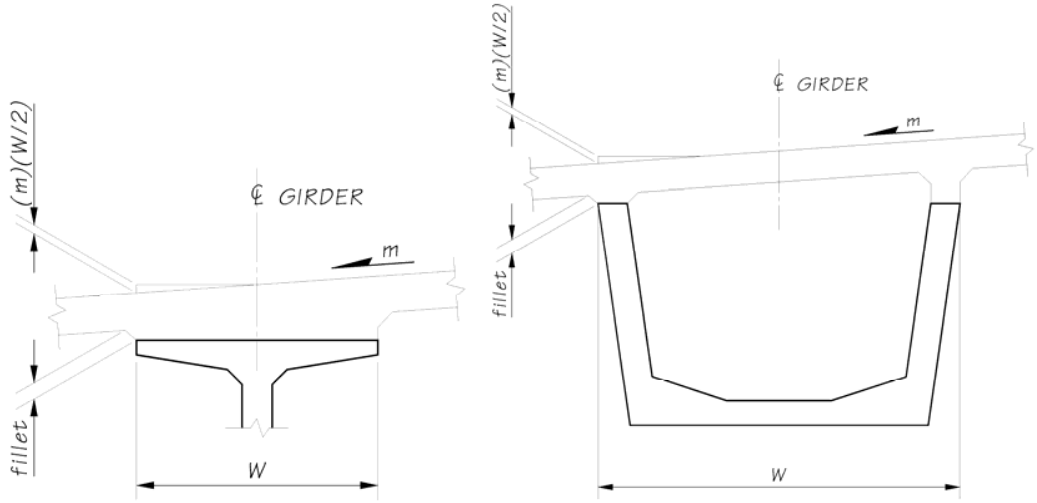

If there is a change in super elevation rate and/or the Y-axis of the girder is not plumb, then once again a more complex computation is required.

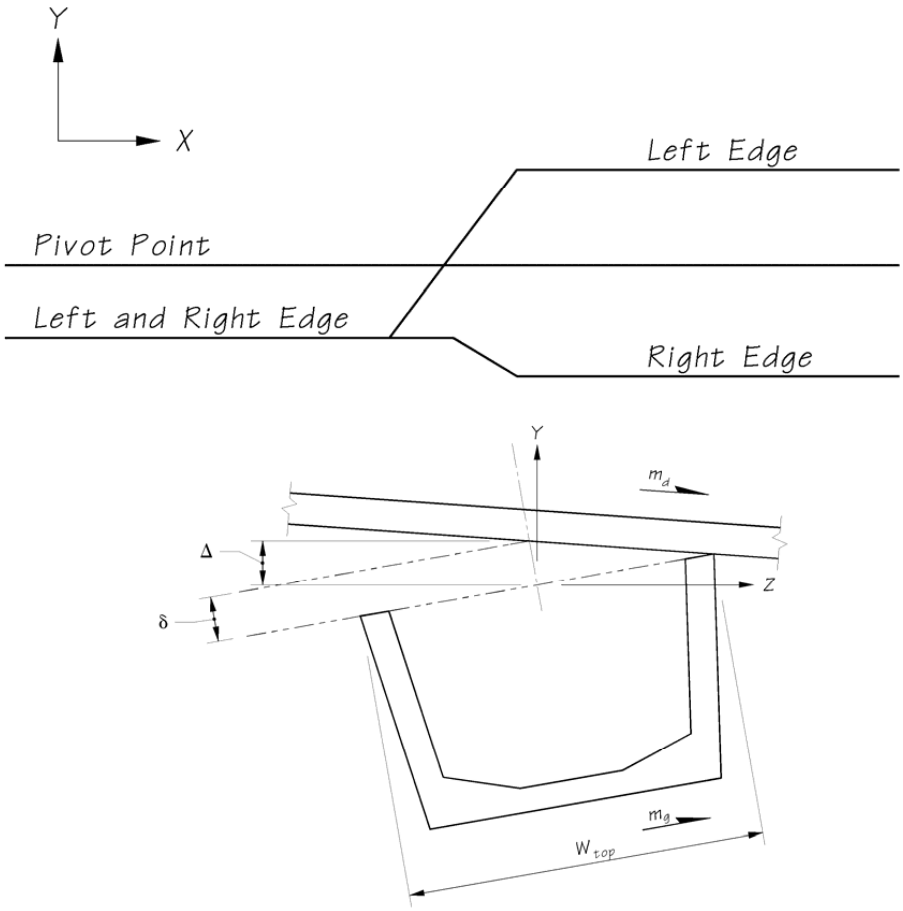

To compute the girder orientation effect at each 10th point along the girder, when the girder is not plumb:

1. Determine the cross slope, *m*, of the roadway surface at station x_i. If there is a crown point over the girder the cross slope is taken as

$$m(x_i, z_i) = \frac{y_a\left(x_i, z_i^{left}\right) - y_a\left(x_i, z_i^{right}\right)}{z_i^{left} - z_i^{right}} \quad \text{(5-B1.16)}$$

Where:

x_i	=	The station where the cross slope is being computed
z_i	=	Normal offset from the alignment to the centerline of the girder at the end of the girder at station x_i
z_i^{left}	=	Offset from the alignment to the top left edge of the girder
z_i^{right}	=	Offset from the alignment to the top right edge of the girder
$y_a\left(x_i, z_i^{left}\right)$	=	Roadway surface elevation at station x_i and normal offset z_i^{left}
$y_a\left(x_i, z_i^{right}\right)$	=	Roadway surface elevation at station x_i and normal offset z_i^{right}

2. Determine the girder orientation effect at station

$$x_i = \frac{W_{top}}{Z}\left|\frac{m - m_g}{\sqrt{1 + {m_g}^2}}\right| \quad \text{(5-B1.17)}$$

"A" Dimension

The "A" dimension is the sum of all these effects.

$$A = \Delta_{fillet} + \Delta_{excess\ camber} + \Delta_{profile\ effect} + \Delta_{girder\ orientation\ effect} \quad \text{(5-B1.18)}$$

If you have a complex alignment, determine the required "A" dimension for each section and use the greatest value.

Round "A" to the nearest ¼″.

The minimum value of "A" is

$$A_{min} = \Delta_{fillet} + \Delta_{girder\ orientation\ effect} \quad \text{(5-B1.19)}$$

If a Drain Type 5 crosses the girder, "A" shall not be less than 9″.

Limitations

These computations are for a single girder line. The required haunch should be determined for each girder line in the structure. Use the greatest "A" dimension.

These computations are also limited to a single span. A different haunch may be needed for each span or each pier. For example, if there is a long span adjacent to a short span, the long span may have considerably more camber and will require a larger haunch. There is no need to have the shorter spans carry all the extra concrete needed to match the longer span haunch requirements. With the WF series girders, the volume of concrete in the haunches can add up quickly. The shorter span could have a different haunch at each end as illustrated below.

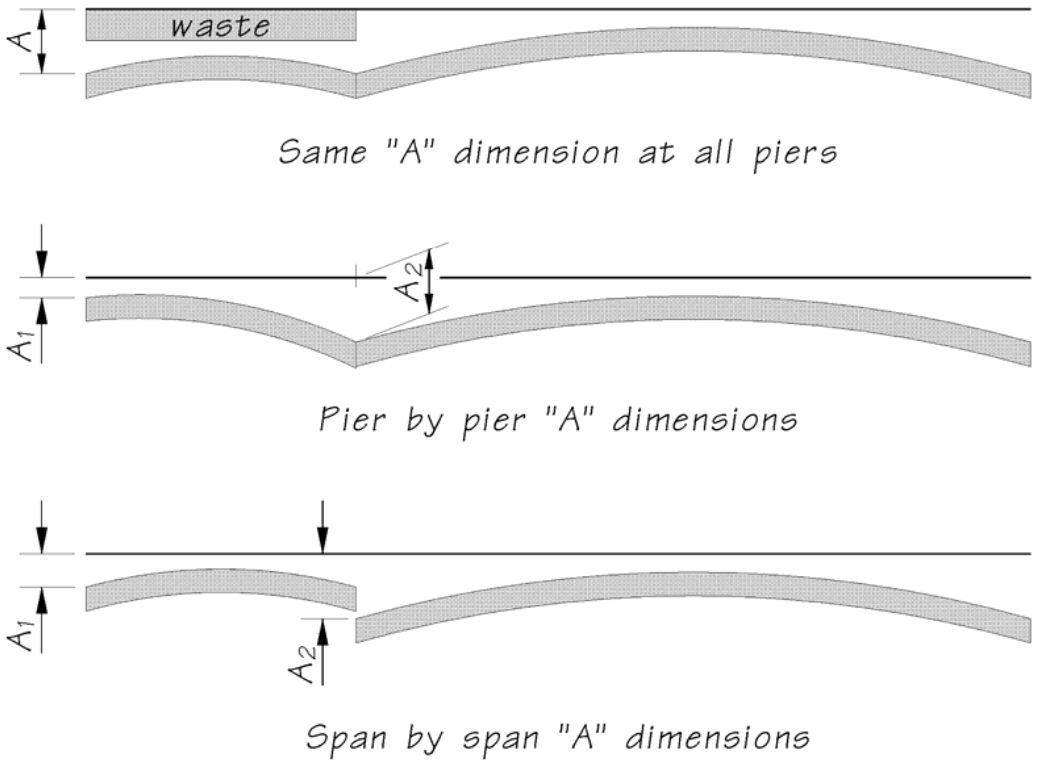

Stirrup Length and Precast Deck Leveling Bolt Considerations

For bridges on crown vertical curves, the haunch depth can become excessive to the point where the girder and diaphragm stirrups are too short to bend into the proper position. Similarly the length of leveling bolts in precast deck panels may need adjustment.

Stirrup lengths are described as a function of "A" on the standard girder sheets. For example, the G1 and G2 bars of a WF74G girder are 6′-5″+ "A" in length. For this reason, the stirrups are always long enough at the ends of the girders. Problems occur when the haunch depth increases along the length of the girder to accommodate crown vertical curves and super elevation transitions.

If the haunch depth along the girder exceeds "A" by more than 2″, an adjustment must be made. The haunch depth at any section can be compute as

$$A - \Delta_{profile\ effect} - \Delta_{excess\ camber} \qquad \text{(5-B1.20)}$$

"A" Dimension Worksheet–Simple Alignment

Fillet Effect

Slab Thickness (t_{slab}) = _____ in
Fillet Size (t_{fillet}) = _____ in
$\Delta_{fillet} = t_{slab} + t_{fillet}$ = _____ in

Excess Camber Effect

"D" Dimension from Girder Schedule (120 days) = _____ in
"C" Dimension from Girder Schedule = _____ in
$\Delta_{excess\ camber} = "D" - "C"$ = _____ in

Profile Effect

Horizontal Curve Effect, $\Delta_{horizontal\ curve\ effect} = \frac{1.5S^2m}{R}$ = _____ in

Vertical Curve Effect, $\Delta_{vertical\ curve\ effect} = \frac{1.5GL_g^2}{100L}$ = _____ in
(+ for sag, – for crown)

$\Delta_{profile} = \Delta_{horizontal\ curve\ effect} + \Delta_{vertical\ curve\ effect}$ = _____ in

Girder Orientation Effect

Girder must be plumb.

$\Delta_{girder\ orientation} = 0$ for U-beams inclined parallel to the slab

$\Delta_{girder\ orientation} = \Delta_{top\ flange\ effect} = m\left(\frac{W_{top}}{2}\right)$ = _____ in

"A" Dimension

$\Delta_{fillet} + \Delta_{excess\ camber} + \Delta_{profile\ effect} + \Delta_{girder\ orientation\ effect}$ = _____ in

Round to nearest ¼″ = _____ in
Minimum "A" Dimension, $\Delta_{fillet} + \Delta_{girder\ orientation\ effect}$ = _____ in

"A" Dimension = _____ in

Example

Slab: Thickness = 7.5″, Fillet = 0.75″

WF74G Girder: W_{top} = 49″

Span Length = 144.4 ft

Crown Slope = 0.04ft/ft

Camber: D = 7.55″, C = 2.57″

Horizontal Curve Radius = 9500 ft through centerline of bridge

Vertical Curve Data: g_1 = 2.4%, g_2 = -3.2%, L = 800 ft

Fillet Effect

Slab Thickness (t_{slab}) = 7.5″

Fillet Size (t_{fillet}) = 0.75″

$\Delta_{fillet} = t_{slab} + t_{fillet}$ = 8.25″

Excess Camber Effect

"D" Dimension from Girder Schedule (120 days) = 7.55″

"C" Dimension from Girder Schedule = 2.57″

$\Delta_{excess\ camber} = "D" - "C"$ = 4.98″

Profile Effect

Horizontal Curve Effect

Chord Length $= 144.4ft, C = 2Rsin\frac{\Delta}{2}\ \ 144.4 = 2(9500)sin\frac{\Delta}{2}\ \ \Delta = 0.87"$

Curve Length $= R\Delta\frac{\pi}{180} = 9500(0.87)\frac{\pi}{180} = 144.4ft$

$$\Delta_{horizontal\ curve\ effect} = \frac{1.5S^2m}{R} = \frac{1.5(144.4)^2\ 0.04}{9500} = 0.13"$$

Vertical Curve Effect $\Delta_{vertical\ curve\ effect} = \frac{1.5GL_g^2}{100L} = \frac{1.5(-5.6)(-144.4)^2}{100(800)} = -2.19"$

(+ for sag, – for crown)

$\Delta_{profile} = \Delta_{horizontal\ curve\ effect} + \Delta_{vertical\ curve\ effect} = 0.13 - 2.19 = -2.06"$

Girder Orientation Effect

$$\Delta_{girder\ orientation} = \Delta_{top\ flange\ effect} = m\left(\frac{W_{top}}{2}\right) = 0.04\frac{49}{2} = 0.98"$$

"A" Dimension

$$\Delta_{fillet} + \Delta_{excess\ camber} + \Delta_{profile\ effect} + \Delta_{girder\ orientation\ effect}$$
$$= 8.25 + 4.98 - 2.06 + 0.98 = 12.15"$$

Round to nearest ¼″ = 12.25″

Minimum "A" Dimension, $\Delta_{fillet} + \Delta_{girder\ orientation\ effect} = 8.25 + 0.98 = 9.23"$

"A" Dimension = 12¼″

Appendix 5-B3 Existing Bridge Widenings

The following listed bridge widenings are included as aid to the designer. These should not be construed as the only acceptable methods of widening; there is no substitute for the designer's creativity or ingenuity in solving the challenges posed by bridge widenings.

Bridge	SR	Contract No.	Type of Bridge	Unusual Features
NE 8th Street U'Xing	405	9267	Ps. Gir.	Pier replacements
Higgins Slough	536	9353	Flat Slab	
ER17 and ARI7 0-Xing	5	9478	Box Girder	Middle and outside widening.
SR 538 0-Xing	5	9548	T-Beam	Unbalanced widening section support at diaphragms until completion of closure pour.
B-NO'Xing	5	9566	Box Girder	Widened with P.S. Girders, X-beams, and diaphragms not in line with existing jacking required to manipulate stresses, added enclusure walls.
Blakeslee Jct. E/W	5	9638	T-Beam and Box Girder	Post-tensioned X-beam, single web.
B-N O'Xing	18	9688	Box Girder	
SR536		9696	T-Beam	Similar to Contract 9548 .
LE Line over Yakima River	90	9806	Box Girder	Pier shaft.
SR 18 0-Xing	90	9823	P.S. Girder	Lightweight concrete
Hamilton Road 0-Xing	5	9894	T-Beam	Precast girder in one span
Dillenbauch Creek	5		Flat Slab	
Longview Wye SR 432 U-Xing	5		P.S. Girder	Bridge lengthening
Klickitat River Bridge	142		P.S. Girder	Bridge replacement
Skagit River Bridge	5		Steel Truss	Rail modification
B-N 0-Xing at Chehalis	5			Replacement of thru steel girder span with stringer span.
Bellevue Access EBCD Widening and Pier 16 Modification	90	3846	Flat Slab and Box Girder	Deep, soft soil. Stradle best replacing Single column
Totem Lake/ NE 124 th 1/C	405	3716	T-Beam	Skew = 55 degrees
Pacific A venue 1/C	5	3087	Box Girder	Complex parallel skewed structures
SR 705/SR 5 SB Added Lane	5	3345	Box Girder	Multiple widen structures
Mercer Slough Bridge 90/43S		3846	CIP Conc. Flat Slab	Tapered widening of flat slab outrigger pier, combined footings
Spring Street 0-Xing No. 5/545SCD		3845	CIP Conc. Box Girder	Tapered widening of box girder with hingers, shafts.
Fishtrap Creek Bridge 546/8		3361	P.C. Units	Widening of existing P.C. Units. Tight constraints on substructure.
Columbia Drive 0-Xing 395/16		3379	Steel Girder	Widening/Deck replacement using standard rolled sections.

Bridge	SR	Contract No.	Type of Bridge	Unusual Features
S 74th-72nd St. 0-Xing No. 5/426		3207	CIP Haunched Con. Box Girder	Haunched P.C. P.T. Bath Tub girder sections.
Pacific Avenue 0-Xing No. 5/332		3087	CIP Cone. Box Girder	Longitudinal joint between new and existing.
Tye River Bridges 2/126 and 2/127		3565	CIP Cone. Tee Beam	Stage construction with crown shift.
SR 20 and BNRR 0-Xing No. 5/714		9220	CIP Cone. Tee Beam	Widened with prestressed girders raised crossbeam.
NE 8th St. U'Xing No. 405/43		9267	Prestressed Girders	Pier replacement - widening.
So. 212th St. U'Xing SR 167		3967	Prestressed Girders	Widening constructed as stand alone structure. Widening column designed as strong column for retrofit.
SE 232nd St. SR 18		5801	CIPConc. Post-tensioned Box	Skew = 50 degree. Longitudinal "link pin" deck joint between new and existing to accommodate new creep.
Obdashian Bridge 2/275		N/A 1999	CIP Post-tensioned Box	Sidewalk widening with pipe struts.

Contract No.	Name	County	Award Date	Span	Width Curb Curb (ft.)	Span/ Depth	Skew Deg.	Remarks
8569	Brickyard Road U'xing	King	2/69	137 155	38	22.2	45	
9122	NE 50th Avenue U'xing	Clark	7/71	124 124	44	24.8	12	
9122	NE 69th Avenue U'xing	Clark	7/71	130 130	84	23.6	0	
9289	SE 232nd Street U'xing	King	3/72	141 133	55	23.5	51	
9448	NE 18th Street U'xing	Clark	1/73	138 138	44	22.8	17	6′ sidewalk on each side.
9737	Mill Plain Road I/C U'xing	Clark	5/74	167 172	84	22.2	8	5′ sidewalk on each side.
0862	East Zillah I/C U'xing	Yakima	10/77	178 158	40	23.0	44	
0862	Hudson Road U'xing	Yakima	10/77	151 151	30	22.6	37	
1219	Johnson Road U'xing	Yakima & Benton	8/78	156 161	34	22.7	45	
1366	Donald Road U'xing	Yakima	12/78	142 155	55	23.8	45	
1764	148th Avenue NE U'xing	King	12/79	168 157	60	21.9	41	
1788	Gap Road U'xing	Yakima	1/80	131 131	30	22.1	37	

Contract No.	Name	County	Award Date	Span	Width Curb Curb (ft.)	Span/ Depth	Skew Deg.	Remarks
2156	14-H Line U'xing	Clark	11/81	114 114	60	22.8	0	
2156	14-D Line U'xing (North)	Clark	11/81	196 196	26	21.8	Curbed 600'R	
2217	SR 12 U'xing	Benton	2/82	147 147	55	23.3	0	
2217	Keene Road U'xing	Benton	2/82	150 150	34	21.4	Curved 11,459'R	25' counterweighted cantilever spans at each end. Transv. P.T.
2207	G Line U'xing	Benton	4/82	162.4 180.6	Varies 78.6-84.6	20.5	0	30' counterweighted cantilever spans at each end. Transv. P.T.
2207	N-S Line U'xing	Benton	4/82	155 155	38	22.1	0	
2207	SR 240 Connection U'xing (R-Line)	Benton	4/82	163.5 163.5	72	20.4	0	25' counterweighted cantilever spans at each end. Transv. P.T.
2236	Road 68 I/C U'xing	Franklin	4/82	191 191	64	23.2	35	
2236	Road 100 I/C U'xing	Franklin	4/82	183 167	55	21.5	15	
2236	SR 14 I/C U'xing (Eastbound)	Franklin	4/82	170 156	26	22.4	Curved 1600'R	
2236	SR 14 I/C U'xing (Westbound)	Franklin	4/82	159 148	38	21.8	Curved 1500'R	

Contract No.	Name	County	Award Date	Span	Width Curb Curb (ft.)	Span/ Depth	Skew Deg.	Remarks
8759	Kalama River Bridge	Cowlitz		40	Varies			6′ sidewalk
	SB		2/70	200	46-53		0	on one side.
				200				
				40				
				40				
	NB		2/70	200	Varies	Varies	0	6′ sidewalk
				200	46.5			on one side.
				40				
				88				
8761	Valley View Road O'xing	Snohomish	2/70	170	38	25.2	0	
				88				
				190				
9102	Columbia River Bridge	Chelan &	7/71	260	74	Varies	0	
	at Olds**	Douglas		190				
				100.5				
				145				
9749	Evergreen Parkway	Thurston		145	26	Varies	47	Hourglass columns.
				114				
				114				
				87.5				
				160				
9840	W Sunset Way Ramp U'xing	King	12/74	159	26	22.9	Curved	
				100			500′R &	
							600′R	
				129				
1193	24F Over MD Line	Clark	8/78	201	26	Varies	0	
				129				
				126				
3794	Sen. Sam C. Guess Memorial		5/90	182	77	Varies	12	Replaced arch, built
	(Division St. 2/644)			126				in two stages.

**Middle 3 spans of 7-span bridge are post-tensioned.

Contract No.	Name	County	Award Date	Span	Width Curb Curb (ft.)	Span/ Depth	Skew Deg.	Remarks
1439	SR 516 O'xing	King	3/79	63.5 133 63.5	42	24.2	40	
1580	Ahtanum Creek O'xing SB	Yakima	8/79	167 5@172 167	26	25.1	Curved 1200'R	
	NB		8/79	137 6@172 166	38	25.1	Curved 1200'R	
1950	Yakima River Bridges North Bridge	Benton	10/80	140+ 161 161 215 147	Varies 48'-100'	Varies	Curved 6000'R	Transverse post-tentioning.
	South Bridge			140+ 161 161 215 147	38	Varies	Curved 5900'R	Transverse post-tensioning. 10' bicycle and pedestrian path on one side.
2156	14-I Line	Clark	11/81	163 145 82	38	22.2	Curved 600'R	
2156	14 D Line (South)	Clark	11/81	128 171 128	26	24.4	Curved 625'R	
2207	GE Line Over G Line	Benton	4/82	90 188 90	38	23.5	Curved 1400'R	

Contract No.	Name	County	Award Date	Span	Width Curb Curb (ft.)	Span/ Depth	Skew Deg.	Remarks
2207	RA Line Over ER Line	Benton	4/82	47 104 47	55	17.3	20	Transverse post-tentioning.
2245	Pearl Street O'xing	Pierce	4/82	49 159 49	54	22.7	Curved 1400'R	
2245	6th Avenue O'xing	Pierce	4/82	43 125 43	Varies 87.4-102	22.7	Curved 1400'R & 400'R	
2327	Spokane River Bridge Stage 1	Spokane	6/82	175 255 175	76	Varies	0	Transverse post-tentioning.
***	Green River Bridge	King		118 150 99	74	Varies	22	
3794	Sen. Sam C. Guess Memorial (Division St. 2/644)		5/90	126 182 126	77	Varies (depth 5.5 to 8.5 at piers)	12	Replaced arch, built in two stages.

***Not yet to contract.

References

1. WSDOT BDM M23-50, Aug 2010
2. WSDOT Bridge Office Design Memorandums
3. AASHTO LRFD Bridge Design Specifications with Interim Revisions through 2010
4. PCI Design Handbook, 5th Ed
5. PCI Bridge Design Manual (PCI BDM)
6. PG Super Theoretical Manual
7. PCI Journal, Jul-Aug 1998, New Deep WSDOT Standard Sections Extend Spans of Prestressed Concrete Girder Bridges
8. PCI Journal, Jan-Feb 2005, Flexural Strength of Reinforced and Prestressed Concrete T-Beams

Unit Definitions and Mathcad System Constants

$kcf := kip \div ft^3$ $ORIGIN := 1$

Design Outline

(double-click hyperlink to go to sections)

1. Material Properties
2. Structure Definition
3. Computation of Section Properties
4. Loading and Limit State Parameters
5. Dead and Live Load Force Effects
6. Computation of Stresses for Dead and Live Loads
7. Prestressing Forces and Stresses
8. Stresses at Service and Fatigue Limit States
9. Strength Limit State
10. Shear & Longitudinal Reinf Design
11. Deflection and Camber
12. Lifting, Shipping, and General Stability
13. Check Results

1. Material Properties

Home

1.1 Concrete - Prestressed Girder

Minimum compressive strength at release $f'_{ci} := 7.5 \cdot ksi$ BDM 5.1.1.A.2

Nominal 28-day compressive strength $f'_c := 8.5 \cdot ksi$

Unit weight of girder concrete (for dead load) $w_c := 0.165kcf$ BDM 3.8

Unit weight of girder concrete for elastic modulus $w_{cE} := 0.155kcf$ BDM 5.1.1 D

Aggregate correction factor $K_1 := 1.0$ BDM 5.1.1.D; LRFD 5.4.2.4

Concrete modulus of elasticity BDM 5.1.1.D; LRFD 5.4.2.4

$$E_c := \begin{cases} 33000 \cdot K_1 \cdot \left(\frac{w_{cE}}{kcf}\right)^{1.5} \cdot \sqrt{\frac{f'_c}{ksi}} \cdot ksi & \text{if } f'_c \le 15ksi \\ \text{"error"} & \text{otherwise} \end{cases} = 5871 \cdot ksi$$

Concrete modulus of elasticity at transfer $E_{ci} := 33000 \cdot K_1 \cdot \left(\frac{w_{cE}}{kcf}\right)^{1.5} \cdot \sqrt{\frac{f'_{ci}}{ksi}} \cdot ksi = 5515 \cdot ksi$ BDM 5.1.1.D; LRFD 5.4.2.4

Concrete modulus of rupture for flexure $f_r := 0.24 \cdot \sqrt{\frac{f'_c}{ksi}} \cdot ksi = 0.700 \cdot ksi$ LRFD 5.4.2.6

Concrete modulus of rupture for flexure at lifting $f_{rL} := 0.24 \cdot \sqrt{\frac{f'_{ci}}{ksi}} \cdot ksi = 0.657 \cdot ksi$ LRFD 5.4.2.6

Concrete modulus of rupture to calculate minimum reinforcement $f_{r.Mcr.min} := 0.37 \cdot \sqrt{\frac{f'_c}{ksi}} \cdot ksi = 1.079 \cdot ksi$

1.2 Concrete - CIP Slab

Nominal 28-day compressive strength $f'_{cs} := 4 \cdot ksi$ BDM 5.1.1.B

Unit weight of CIP concrete (for dead load) $w_{cs} := 0.155kcf$ BDM 3.8

Unit weight of CIP concrete for elastic modulus $w_{csE} := 0.150kcf$ BDM 5.1.1 D

Concrete modulus of elasticity BDM 5.1.1.D; LRFD 5.4.2.4

$$E_{cs} := \begin{cases} 33000 \cdot K_1 \cdot \left(\frac{w_{csE}}{kcf}\right)^{1.5} \cdot \sqrt{\frac{f'_{cs}}{ksi}} \cdot ksi & \text{if } f'_c \le 15ksi \\ \text{"error"} & \text{otherwise} \end{cases} = 3834 \cdot ksi$$

Stress Block Factor $\beta_1 := \begin{cases} 0.85 & \text{if } f'_{cs} \le 4ksi \\ 0.65 & \text{if } f'_{cs} \ge 8ksi \\ 0.85 - 0.05 \cdot \frac{f'_{cs} - 4ksi}{1ksi} & \text{otherwise} \end{cases} = 0.85$ LRFD 5.7.2.2

1.3 Reinforcing steel - deformed bars

This function returns a bar diameter:

This function returns a bar area:

$$dia(bar) := \begin{cases} 0.375\cdot in & \text{if } bar = 3 \\ 0.500\cdot in & \text{if } bar = 4 \\ 0.625\cdot in & \text{if } bar = 5 \\ 0.750\cdot in & \text{if } bar = 6 \\ 0.875in & \text{if } bar = 7 \\ 1.000in & \text{if } bar = 8 \\ 1.128in & \text{if } bar = 9 \\ 1.270in & \text{if } bar = 10 \\ 1.410in & \text{if } bar = 11 \\ 1.693in & \text{if } bar = 14 \\ 2.257in & \text{if } bar = 18 \\ \text{"ERROR"} & \text{otherwise} \end{cases}$$

$$area(bar) := \begin{cases} 0.110\cdot in^2 & \text{if } bar = 3 \\ 0.197\cdot in^2 & \text{if } bar = 4 \\ 0.309\cdot in^2 & \text{if } bar = 5 \\ 0.445\cdot in^2 & \text{if } bar = 6 \\ 0.600\cdot in^2 & \text{if } bar = 7 \\ 0.786\cdot in^2 & \text{if } bar = 8 \\ 1.003\cdot in^2 & \text{if } bar = 9 \\ 1.270\cdot in^2 & \text{if } bar = 10 \\ 1.561\cdot in^2 & \text{if } bar = 11 \\ 2.251\cdot in^2 & \text{if } bar = 14 \\ 3.998\cdot in^2 & \text{if } bar = 18 \\ \text{"ERROR"} & \text{otherwise} \end{cases}$$

Yield strength	$f_y := 60\cdot ksi$	BDM 5.1.2
Elastic modulus	$E_s := 29000\cdot ksi$	LRFD 5.4.3.2

1.4 Prestressing Steel - AASHTO M-203, Uncoated, 7 Wire, Low-Relaxation Strands

Tensile strength	$f_{pu} := 270\cdot ksi$	BDM 5.1.3; LRFD 5.4.4.1
Yield strength	$f_{py} := 0.90\cdot f_{pu} = 243.0\cdot ksi$	
Strand modulus of elasticity	$E_p := 28500\cdot ksi$	LRFD 5.4.4.2
Nominal strand diameter	$d_b := 0.6\cdot in$	BDM 5.1.3
Area of wire strand	$A_p := \begin{cases} 0.153in^2 & \text{if } d_b = 0.5in \\ 0.217in^2 & \text{if } d_b = 0.6in \end{cases} = 0.217\cdot in^2$	BDM App. 5.1-A8
Transfer Length	$l_t := 60\cdot d_b = 36.0\cdot in$	BDM 5.1.3-D.1 LRFD 5.11.4.1

2. Structure Definition

Home

2.1 Bridge Geometry

Select "interior" or "exterior" girder	girder := "interior"	
Bridge width (inside curb to inside curb)	$BW := 38 \cdot ft$	
Girder spacing	$S := 6.5 \cdot ft$	BDM 5.6.4.B
Number of girder lines	$N_b := 6$	
Skew angle (for girders round to 5 deg)	$\theta_{sk} := 30 \cdot deg$	BDM 5.6.4.D.2
Design span, CL bearing to CL bearing	$L := 130ft$	
Distance from end of girder to CL bearing	$P2 := 1.973ft = 23.68 \cdot in$	
Girder length (see BDM end diaphram geometry)	$GL := L + 2 \cdot P2 = 133.946\,ft$	
Curb width on deck (see Standard Plans)	$cw := 10.5 \cdot in$	
Deck overhang (from CL of exterior girder to end of deck)	$overhang := \frac{BW - (N_b - 1) \cdot S}{2} + cw = 3.625\,ft$	
Overhang thickness at edge of slab	$o_e := 7in$	
Overhang thickness at exterior edge of top flange	$o_f := 12in$	

2.2 Concrete Deck Slab

Slab depth for design	$t_s := 7 \cdot in$	BDM 5.2.2.A; BDM 5.6.2.B.3
Depth of wearing surface	$t_{wear} := 0.5in$	
Slab depth for weight	$t_{s2} := t_s + t_{wear} = 7.50 \cdot in$	

2.3 Intermediate Diaphragms

Intermediate Diaphragm Thickness	$t_{dia} := 8in$	
Intermediate Diaphragm Height (excluding deck)	$h_{dia} := 48in$	

2.4 Prestressing

Number of harping strands	$N_h := 12$	
Number of straight strands	$N_s := 26$	
Number of temporary strands	$N_t := 6$	
Harping location from girder end	$x_h := 0.4 \cdot GL = 53.58\,ft$	BDM 5.1.3.C.2
Distance from girder bottom to lowest straight strand	$s_{bottom} := 2in$	

2.5 Site Data

Average annual relative humidity	$H := 75\%$	BDM 5.1.1.E

3. Computation of Section Properties

Home

3.1 Girder Properties

(collapsible region containing BDM Table 5.6.1-1)

Washington standard girder

$girdertype := "WF74G"$

Row in BDM Table 5.6.1-1 for this girder

$row := \left(match\left(girdertype, BDMTable_{5.6.1}\right)_1\right)_1 = 12.0$

Girder depth

$d_g := BDMTable_{5.6.1}{}_{row,2}\,in = 74.0 \cdot in$

Girder cross-section area

$A_g := BDMTable_{5.6.1}{}_{row,3}\,in^2 = 923.5 \cdot in^2$

Girder moment of inertia (strong-axis)

$I_g := BDMTable_{5.6.1}{}_{row,4}\,in^4 = 734356 \cdot in^4$

Girder c.g. from girder bottom

$Y_{bg} := BDMTable_{5.6.1}{}_{row,5}\,in = 35.660 \cdot in$

Girder Volume-to-surface ratio

$VS_r := BDMTable_{5.6.1}{}_{row,7}\,in = 3.190 \cdot in$

Girder Weight

$w_g := A_g \cdot w_c = 1.058 \cdot \frac{kip}{ft}$

Girder web width

$b_w := 6.125in$

Girder top flange width

$b_f := 49in$

Girder bottom flange width

$b_{f.bot} := 38.375in$

Girder moment of inertia (weak axis)

$I_y := 72018.4in^4$

Lifting Point from both ends of girder

$L_1 := 5ft$

Shipping Point from Front (left) end of girder

$L_L := 10ft$

Shipping Point from Back (right) end of girder

$L_T := 10ft$

Calculated section properties

Girder c.g. to girder top

$Y_{tg} := d_g - Y_{bg} = 38.340 \cdot in$

Section modulus to top of girder

$S_{tg} := I_g \div Y_{tg} = 19153.8 \cdot in^3$

Section modulus to bottom of girder

$S_{bg} := I_g \div Y_{bg} = 20593.3 \cdot in^3$

Shear Stirrup Reinforcement

Since the reaction force in the direction of the applied shear introduces compression into the end region, the critical section for shear may be taken at d_v from interior face of support. LRFD 5.8.3.2

d_v may be estimated using LRFD 5.8.2.9 where d_v need not be taken less than 0.72 h. Place live load LRFD 5.8.2.9

vehicle with heavy axle at d_v from support.

Estimate of d_v to determine critical section for shear calculations $d_{est} := 0.72 \cdot (d_g + t_s) = 4.86 \cdot ft$

Vertical stirrup bar size $bar_v := 5$

Define stirrup spacing for entire girder by giving stirrup reinforcing zone lengths and spacing of stirrups within each zone. Zones are defined sequentially from front of girder to the end. The sum of the zone lengths must equal the total girder length. Additional rows may be added if necessary. The first and last zones should be the clearance to the first stirrup from the end of the girder. A pair of stirrups is assumed located at the transition locations between zones.

Front End of Girder		Back End of Girder	
Zone 1 Length (end clr)	$VR_{1,1} := 1.5in$	Zone 11 Length (end clr)	$VR_{11,1} := VR_{1,1}$
Zone 1 Stirrup Spacing	$VR_{1,2} := VR_{1,1}$	Zone 11 Stirrup Spacing	$VR_{11,2} := VR_{1,2}$
Zone 2 Length	$VR_{2,1} := 20in$	Zone 10 Length	$VR_{10,1} := VR_{2,1}$
Zone 2 Stirrup Spacing	$VR_{2,2} := 2.5in$	Zone 10 Stirrup Spacing	$VR_{10,2} := VR_{2,2}$
Zone 3 Length	$VR_{3,1} := 72in$	Zone 9 Length	$VR_{9,1} := VR_{3,1}$
Zone 3 Stirrup Spacing	$VR_{3,2} := 6in$	Zone 9 Stirrup Spacing	$VR_{9,2} := VR_{3,2}$
Zone 4 Length	$VR_{4,1} := 120in$	Zone 8 Length	$VR_{8,1} := VR_{4,1}$
Zone 4 Stirrup Spacing	$VR_{4,2} := 12in$	Zone 8 Stirrup Spacing	$VR_{8,2} := VR_{4,2}$
Zone 5 Length	$VR_{5,1} := 120in$	Zone 7 Length	$VR_{7,1} := VR_{5,1}$
Zone 5 Stirrup Spacing	$VR_{5,2} := 12in$	Zone 7 Stirrup Spacing	$VR_{7,2} := VR_{5,2}$

Zone 6 Length (at girder midspan) $VR_{6,1} := GL - \sum_{i=1}^{5} VR_{i,1} - \sum_{i=7}^{11} VR_{i,1}$

Zone 6 Stirrup Spacing (at girder midspan) $VR_{6,2} := 18in$

$VR =$

	Length of Region	Stirrup Spacing
	1	2
1	1.50	1.50
2	20.00	2.50
3	72.00	6.00
4	120.00	12.00
5	120.00	12.00
6	840.35	18.00

$\cdot in$

6	940.33	18.00
7	120.00	12.00
8	120.00	12.00
9	72.00	6.00
10	20.00	2.50
11	1.50	1.50

Check if lengths of user defined shear reinforcement regions sum to the total girder length

$$chk_{3,1} := if\left(\sum_{i=1}^{rows(VR)} VR_{i,1} = GL, "OK", "NG"\right) = "OK"$$

3.2 "A" Dimension

Fillet Effect $A_{fi} := 0.75in$ BDM App 5-B1

Excessive Camber Effect (estimate) $A_{Ex} := 2.5in$

Superelevation Rate $Super := 0.02$

Length of Horizontal Curve $S_H := 0ft$

Radius of Horizontal Curve $R_H := 0ft$

Vertical Curve Length $L_{VC} := 1000ft$

Entrance Grade $g_1 := 0$ %

Exit Grade $g_2 := -0$ %

Horizontal Curve Effect

$$A_{HC} := \frac{1.5\cdot\left(S_H \div ft\right)^2\cdot Super}{R_H \div ft}\cdot in = 0.000\cdot in$$

Vertical Curve Effect

$$A_{VC} := \frac{1.5\cdot\left(g_2 - g_1\right)\cdot\left(\frac{GL}{ft}\right)^2}{100\cdot\frac{L_{VC}}{ft}}\cdot in = 0.000\cdot in$$

Girder Orientation Effect

$$A_{Orient} := Super\cdot\frac{b_f}{2} = 0.490\cdot in$$

Calculated "A" dimension

$$A_{P1} := Ceil\left(t_{s2} + A_{fi} + A_{Ex} + A_{HC} + A_{VC} + A_{Orient}, \frac{1}{4}in\right) = 11.25\cdot in$$

$$A := \max\left(A_{P1}, t_{s2} + A_{fi}\right) = 11.25\cdot in$$

3.3 Span-to-Depth Ratio (Optional Criteria)

Minimum depth (for simple span prestressed girder, including deck) $depth_{min} := 0.045\cdot L = 70.2\cdot in$ LRFD 2.5.2.6.3

Check minimum depth $chk_{3,2} := \text{if}\left(depth_{min} \le d_g + t_s, \text{"OK"}, \text{"NG"}\right) = \text{"OK"}$

3.4 Composite Section Properties

Effective flange width

LRFD 4.6.2.6.1

Check if Refined Analysis is required $chk_{3,3} := \text{if}\left(\theta_{sk} > 75deg, \text{"NG"}, \text{"OK"}\right) = \text{"OK"}$

Effective flange width for interior girder $b_i := S = 78.00 \cdot in$

Effective flange width for exterior girder $b_{ex} := 0.5 \cdot S + overhang = 82.50 \cdot in$

Effective flange width $b_e := \begin{cases} b_i & \text{if girder} = \text{"interior"} \\ b_{ex} & \text{if girder} = \text{"exterior"} \end{cases} = 78.00 \cdot in$

Transformed Slab Properties

Modular ratio $n := \frac{E_{cs}}{E_c} = 0.65$ BDM 5.6.2.B.3

Slab transformed flange width $b_{e.trans} := b_e \cdot n = 50.94 \cdot in$

Slab moment of inertia (transformed) $I_{slab} := b_{e.trans} \cdot t_s^3 \div 12 = 1456.0 \cdot in^4$

Area of slab (transformed) $A_{slab} := b_{e.trans} \cdot t_s = 356.6 \cdot in^2$

c.g. of slab to bottom of girder $Y_{bs} := d_g + 0.5 \cdot t_s = 77.5 \cdot in$

Composite Section

c.g. to bottom of girder $Y_b := \frac{A_{slab} \cdot Y_{bs} + A_g \cdot Y_{bg}}{A_{slab} + A_g} = 47.31 \cdot in$

c.g. to top of girder $Y_t := d_g - Y_b = 26.69 \cdot in$

c.g. to top of slab $Y_{ts} := t_s + Y_t = 33.69 \cdot in$

Slab moment of inertia about composite N.A. $I_{slabc} := A_{slab} \cdot \left(Y_{ts} - 0.5t_s\right)^2 + I_{slab} = 326347 \cdot in^4$

Girder moment of inertia about composite N.A. $I_{gc} := A_g \cdot \left(Y_b - Y_{bg}\right)^2 + I_g = 859801 \cdot in^4$

Composite section moment of inertia $I_c := I_{slabc} + I_{gc} = 1186148 \cdot in^4$

Section modulus to bottom of girder $S_b := I_c \div Y_b = 25069 \cdot in^3$

Section modulus to top of girder $S_t := I_c \div Y_t = 44450 \cdot in^3$

Section modulus to top of slab (modified by modular ratio to get stress for correct slab effective width) $S_{ts} := \frac{I_c}{Y_{ts}}\left(\frac{1}{n}\right) = 53919 \cdot in^3$

4. Loading and Limit State Parameters

Home

4.1 Live Load Parameters

HL93 Truck/Tandem Axle Base Width $axlewidth := 6ft$ LRFD 3.6.1.2

HL93 Lane Load $w_{lane} := 0.64 \cdot kip \div ft$ LRFD 3.6.1.2.4

Number of Design Lanes

$$N_L := \begin{cases} \text{floor}\left(\frac{BW}{12 \cdot ft}\right) & \text{if } BW > 24 \cdot ft = 3.0 \\ 2 & \text{if } 24 \cdot ft \geq BW \geq 20 \cdot ft \\ 1 & \text{otherwise} \end{cases}$$ LRFD 3.6.1.1.1

Multiple Presence Factor

$$m_p := \begin{cases} \text{return } 1.20 & \text{if } N_L = 1 \quad = 0.85 \\ \text{return } 1.00 & \text{if } N_L = 2 \\ \text{return } 0.85 & \text{if } N_L = 3 \\ \text{return } 0.65 & \text{otherwise} \end{cases}$$ LRFD 3.6.1.1.2

4.2 Service Limit States

Limit states relating to stress, deformation, and crack width under regular service conditions. LRFD 5.5.2

Service I - Load combination relating to the normal operational use of the bridge. Compression in prestressed components is investigated using this load combination. LRFD 3.4.1

1.0 (DC + DW) + 1.0 (LL+IM)

Service III - Load combination relating only to tension in prestressed concrete superstructures with the objective of crack control.

1.0 (DC + DW) + 0.8 (LL+IM)

Notes:
1. Force effects due to temperature, shrinkage and creep, because of the free movement at end piers, are considered to be zero.
2. Force effects due to temperature gradient, wind, friction at bearings, and settlement are ignored.

Service III Limit State Live Load Factor $\gamma_{LLserIII} := 0.8$

4.3 Strength Limit States

Load Combinations

LRFD 3.4.1

- Strength I load combination shall be satisfied in final operational condition.
- The force effects due to temperature shrinkage and creep are ignored.

Resistance factors

LRFD 5.5.4.2.1
BDM 5.2.4.B.1

Tension-controlled precast/prestressed concrete $\phi_f := 1.0$

Precast/prestressed concrete - transition region $\phi_{pTrans}(d_t, c) := 0.583 + 0.25 \cdot \left(\frac{d_t}{c} - 1\right)$

Compression-controlled concrete with spirals or ties	$\phi_c := 0.75$	
Axial/Flexure for precast/prestressed concrete	$\phi_p(d_t, c) := \text{if}(c = 0, \phi_f, \max(\min(\phi_{pTrans}(d_t, c), \phi_f), \phi_c))$	
Shear and torsion of normal weight concrete	$\phi_v := 0.90$	

Load Factors

Dead load - Structure and Attachments	$\gamma_{DC} := 1.25$	LRFD Tables 3.4.1-1 and -2
Dead load - Wearing Surfaces and Utilities	$\gamma_{DW} := 1.5$	
Live load	$\gamma_{LL} := 1.75$	

Load Modifier

Ductility Factor	$\eta_D := 1.00$	LRFD 1.3.3
Redundancy Factor	$\eta_R := 1.00$	LRFD 1.3.4
Operational Importance Factor	$\eta_I := 1.00$	LRFD 1.3.5
Load Modifier	$\eta := \max(\eta_D \cdot \eta_R \cdot \eta_I, 0.95) = 1.0$	LRFD 1.3.2

4.4 Fatigue Limit State

The compressive stress due to the Fatigue 1 load combination and one-half the sum of effective prestress and permanent loads shall not exceed 0.40 f'c after losses. LRFD 5.5.3.1

Fatigue 1 Limit State Live Load Factor	$\gamma_{LLfat} := 1.5$	LRFD Tables 3.4.1-1 and -2

5. Dead and Live Load Force Effects

Home

Define Sections for Computation of Forces and Stresses

Define the section locations along the girder length where moments, shears and stresses are to be computed:

Girder End / Midspan / Girder End

$$SE := \begin{pmatrix} 0ft \\ P2 + 0.1L \\ P2 + 0.2L \\ P2 + 0.3L \\ P2 + 0.4L \\ P2 + 0.5L \\ P2 + 0.6L \\ P2 + 0.7L \\ P2 + 0.8L \\ P2 + 0.9L \\ GL \end{pmatrix} \quad SE = \begin{pmatrix} 0.000 \\ 14.973 \\ 27.973 \\ 40.973 \\ 53.973 \\ 66.973 \\ 79.973 \\ 92.973 \\ 105.973 \\ 118.973 \\ 133.946 \end{pmatrix} ft$$

Add Support, Harp, Critical Shear, Transfer, Lifting and Shipping Support Points to the Section Vector

Add these points only if they are not there already.

```
SE := | Sections ← SE
      | ADD ← (P2  GL − P2  0.4GL  0.6GL  P2 + d_est  GL − P2 − d_est  l_t  GL − l_t  L_1  GL − L_1  L_L  GL − L_T)
      | for j ∈ 1 .. cols(ADD)
      |     Match ← 0
      |     for i ∈ 1 .. rows(Sections)
      |       Match ← 1 if Sections_i = ADD_1,j
      |     Sections ← stack(Sections, ADD_1,j) if ¬Match
      | return Sections
```

Sort vector SE in ascending order $SE := sort(SE)$

Find Row Numbers for Points of Interest

Row number of left support $rs_L := match(P2, SE)_1 = 2.0$

Row number of right support $rs_R := match(GL - P2, SE)_1 = 22.0$

Row number of left PS Transfer point $rp := match(l_t, SE)_1 = 3.0$

Row number of left critical section for shear $rc := match(P2 + d_{est}, SE)_1 = 5.0$

Row number of left harp point $rh := match(0.4GL, SE)_1 = 10.0$

$SE =$ ft

	1
1	0.000
2	1.973
3	3.000
4	5.000
5	6.833
6	10.000
7	14.973
8	27.973
9	40.973
10	53.578
11	53.973
12	66.973
13	79.973
14	80.368
15	92.973

Row number of midspan $rm := match(P2 + 0.5L, SE)_1 = 12.0$

Row number of left lifting point $rl_1 := match(L_1, SE)_1 = 4.0$

Row number of right lifting point $rl_2 := match(GL - L_1, SE)_1 = 20.0$

Row number of left shipping (bunk) point $rb_L := match(L_L, SE)_1 = 6.0$

Row number of right shipping (bunk) point $rb_R := match(GL - L_T, SE)_1 = 18.0$

Range variable for rows of SE $i := 1 .. rows(SE)$

15	92.973
16	105.973
17	118.973
18	123.946
19	127.113
20	128.946
21	130.946
22	131.973
23	133.946

Functions for Shear and Moment

Function for moment on simple span with uniform load
w = Uniform Load
L = Simple Span Length
x = Location to determine moment

$$M_{uniform}(w, L, x) := \begin{cases} \text{return } 0kip \cdot ft \text{ if } x < 0ft \vee x > L \\ \frac{w \cdot x}{2} \cdot (L - x) \end{cases}$$

Function for shear on simple span with uniform load
w = Uniform Load
L = Simple Span Length
x = Location to determine shear

$$V_{uniform}(w, L, x) := \begin{cases} \text{return } 0kip \text{ if } x < 0ft \vee x > L \\ w \cdot \left(\frac{L}{2} - x\right) \end{cases}$$

Function for moment on simple span with point load
P = Point Load
a = Location of Point Load from left support
L = Simple Span Length
x = Location to determine moment

$$M_{point}(P, a, L, x) := \begin{cases} \text{return } 0kip \cdot ft \text{ if } x < 0ft \vee x > L \\ \text{return } 0kip \cdot ft \text{ if } a < 0ft \vee a > L \\ \frac{P \cdot (L - x) \cdot a}{L} \text{ if } 0ft \le a \le x \\ \frac{P \cdot (L - a) \cdot x}{L} \text{ if } x < a \le L \end{cases}$$

Function for shear on simple span with point load.
When a = x, the positive value is returned.
P = Point Load
a = Location of Point Load from left support
L = Simple Span Length
x = Location to determine shear

$$V_{point}(P, a, L, x) := \begin{cases} \text{return } 0kip \text{ if } x < 0ft \vee x > L \\ \text{return } 0kip \cdot ft \text{ if } a < 0ft \vee a > L \\ -\frac{P \cdot a}{L} \text{ if } 0ft \le a < x \\ \frac{P \cdot (L - a)}{L} \text{ if } x \le a \le L \end{cases}$$

Function for moment on simple span with cantilevered ends with uniform load
w = Uniform Load
a = Front cantilever length by left support
b = Back cantilever length by right support
L = Simple Span Length (between supports)
x = Location to determine moment measured from left (front) end

$$M_{cant}(w,a,b,L,x) := \begin{cases} \text{return } 0\text{kip}\cdot\text{ft} & \text{if } x < 0\text{ft} \vee x > a + L + b \\ \text{return } -\frac{w\cdot x^2}{2} & \text{if } x \le a \\ \text{return } \frac{w}{L}\cdot(a + L + b)\cdot\left(\frac{a + L + b}{2} - b\right)\cdot(x - a) - \frac{w\cdot x^2}{2} & \text{if } a < x < a + L \\ \text{return } -\frac{w\cdot(a + L + b - x)^2}{2} & \text{if } a + L \le x \end{cases}$$

5.1 Dead Load - Girder

Moments when on span supports

$$M^{\langle 1\rangle} := \begin{cases} \text{for } i \in rs_L .. rs_R \\ \quad Mom_i \leftarrow M_{uniform}(w_g, L, SE_i - P2) \\ Mom \end{cases}$$

Moments at Casting Yard (Release)

$$M^{\langle 11\rangle} := \begin{cases} \text{for } i \in 1 .. \text{rows}(SE) \\ \quad Mom_i \leftarrow M_{uniform}(w_g, GL, SE_i) \\ Mom \end{cases}$$

Shears when on span supports

$$V^{\langle 1\rangle} := \begin{cases} \text{for } i \in rs_L .. rs_R \\ \quad v_i \leftarrow V_{uniform}(w_g, L, SE_i - P2) \\ v \end{cases}$$

5.2 Dead Load - Intermediate Diaphragms

Number of Intermediate Diaphragms

$$n_{dia} := \begin{cases} \text{return } 4 & \text{if } L > 160\text{ft} \\ \text{return } 3 & \text{if } 160\text{ft} \ge L > 120\text{ft} \\ \text{return } 2 & \text{if } 120\text{ft} \ge L > 80\text{ft} \\ \text{return } 1 & \text{if } 80\text{ft} \ge L > 40\text{ft} \\ 0 & \text{otherwise} \end{cases} = 3.0$$ BDM 5.6.2

Spacing of Intermediate Diaphragms along girder span

$$DiaSpacing := \frac{L}{n_{dia} + 1} = 32.5\,\text{ft}$$

Intermediate Diaphragm Length

$$Dia_L := \frac{S - b_w}{\cos(\theta_{sk})} = 82.99\cdot\text{in}$$

Approximate Weight of Intermediate Diaphrarm

$$DiaWt := \begin{cases} w_{cs}\cdot Dia_L\cdot t_{dia}\cdot h_{dia} & \text{if girder} = \text{"interior"} \\ w_{cs}\cdot Dia_L\cdot t_{dia}\cdot h_{dia}\cdot 0.5 & \text{if girder} = \text{"exterior"} \end{cases}$$

$$DiaWt = 2.859\cdot\text{kip}$$

Moments

$$M^{\langle 2 \rangle} := \left| \begin{array}{l} \text{for } i \in rs_L .. rs_R \\ \quad \left| \begin{array}{l} a \leftarrow 0\text{ft} \\ Mom_i \leftarrow 0\text{kip}\cdot\text{ft} \\ \text{for } j \in 1 .. n_{dia} \\ \quad \left| \begin{array}{l} a \leftarrow a + DiaSpacing \\ Mom_i \leftarrow Mom_i + M_{point}\left(DiaWt, a, L, SE_i - P2\right) \end{array} \right. \end{array} \right. \\ Mom \end{array} \right.$$

Shears

$$V^{\langle 2 \rangle} := \left| \begin{array}{l} \text{for } i \in rs_L .. rs_R \\ \quad \left| \begin{array}{l} a \leftarrow 0\text{ft} \\ v_i \leftarrow 0\text{kip} \\ \text{for } j \in 1 .. n_{dia} \\ \quad \left| \begin{array}{l} a \leftarrow a + DiaSpacing \\ v_i \leftarrow v_i + V_{point}\left(DiaWt, a, L, SE_i - P2\right) \end{array} \right. \end{array} \right. \\ v \end{array} \right.$$

5.3 Dead Load - Pad

The full effective pad ("A"-t) weight shall be applied over the full length of the girder. BDM 5.6.2.B.3.d

Depth of slab pad is "A" dimension minus full deck thickness

$$t_{pu} := A - t_{s2} = 3.75\cdot\text{in}$$

Weight of pad

$$w_{pu} := t_{pu}\cdot b_f\cdot w_{cs} = 0.198\cdot\frac{\text{kip}}{\text{ft}}$$

Moments

$$M^{\langle 3 \rangle} := \left| \begin{array}{l} \text{for } i \in rs_L .. rs_R \\ \quad Mom_i \leftarrow M_{uniform}\left(w_{pu}, L, SE_i - P2\right) \\ Mom \end{array} \right.$$

Shears

$$V^{\langle 3 \rangle} := \left| \begin{array}{l} \text{for } i \in rs_L .. rs_R \\ \quad v_i \leftarrow V_{uniform}\left(w_{pu}, L, SE_i - P2\right) \\ v \end{array} \right.$$

5.4 Dead Load - Slab

Weight of slab

$$w_s := \left| \begin{array}{l} t_{s2}\cdot S\cdot w_{cs} \quad \text{if girder} = \text{"interior"} \\ \left[t_{s2}\cdot\left(\frac{S}{2} + \frac{b_f}{2}\right) + \frac{o_e + o_f}{2}\cdot\left(\text{overhang} - \frac{b_f}{2}\right) \right]\cdot w_{cs} \quad \text{if girder} = \text{"exterior"} \end{array} \right. = 0.630\cdot\frac{\text{kip}}{\text{ft}}$$

Moments

$$M^{\langle 4 \rangle} := \left| \begin{array}{l} \text{for } i \in rs_L .. rs_R \\ \quad Mom_i \leftarrow M_{uniform}\left(w_s, L, SE_i - P2\right) \\ Mom \end{array} \right.$$

Shears

$$V^{\langle 4 \rangle} := \left| \begin{array}{l} \text{for } i \in rs_L .. rs_R \\ \quad v_i \leftarrow V_{uniform}\left(w_s, L, SE_i - P2\right) \\ v \end{array} \right.$$

5.5 Dead Load - Barrier

Dead load of one traffic barrier is divided among a maximum of three girders. If the bridge has less than 6 girders, then the weight of the two barriers should be divided equally between all girders. BDM 5.6.2.B.2

Weight of one 32" F shape traffic barrier is $tb := 0.460 \cdot kip \div ft$ BDM 3.8

Weight of traffic barrier per girder

$$w_b := \left| \begin{array}{ll} \frac{2 \cdot tb}{N_b} & \text{if } N_b < 6 \quad = 0.153 \cdot \frac{kip}{ft} \\ \frac{tb}{3} & \text{otherwise} \end{array} \right.$$

The Functions below assumes the bridge is a simple span. If the weight of barrier is to be superimposed upon spans made continuous, the function must be modified.

Moments

$$M^{\langle 5 \rangle} := \left| \begin{array}{l} \text{for } i \in rs_L .. rs_R \\ \quad Mom_i \leftarrow M_{uniform}\left(w_b, L, SE_i - P2\right) \\ Mom \end{array} \right.$$

Shears

$$V^{\langle 5 \rangle} := \left| \begin{array}{l} \text{for } i \in rs_L .. rs_R \\ \quad v_i \leftarrow V_{uniform}\left(w_b, L, SE_i - P2\right) \\ v \end{array} \right.$$

5.6 Dead Load - Future Overlay

For deck protection system 1, include the weight of a future 2" HMA overlay BDM 3.8.1

Weight of Overlay

$$w_o := \left| \begin{array}{ll} 2in \cdot S \cdot 0.140kcf & \text{if girder} = \text{"interior"} \quad = 0.152 \cdot \frac{kip}{ft} \\ 2in \cdot \left(\frac{S}{2} + overhang - cw \right) \cdot 0.140kcf & \text{if girder} = \text{"exterior"} \end{array} \right.$$

The Functions below assume the bridge is a simple span. If the weight of future overlay is to be superimposed upon spans made continuous, the functions must be modified.

Moments

$$M^{\langle 6 \rangle} := \left| \begin{array}{l} \text{for } i \in rs_L .. rs_R \\ \quad Mom_i \leftarrow M_{uniform}\left(w_o, L, SE_i - P2\right) \\ Mom \end{array} \right.$$

Shears

$$V^{\langle 6 \rangle} := \left| \begin{array}{l} \text{for } i \in rs_L .. rs_R \\ \quad v_i \leftarrow V_{uniform}\left(w_o, L, SE_i - P2\right) \\ v \end{array} \right.$$

5.7 Live Load - AASHTO Design truck

Bending Moment

The following function finds the maximum moment due to an AASHTO HL93 Truck Load at a section a distance "x" along a simple span of length "L". A truck moving both directions is checked. LRFD 3.6.1.2.2

$$HL93TruckM(x, L) := \left| \begin{array}{l} Axles \leftarrow \begin{pmatrix} 8kip \\ 32kip \\ 32kip \end{pmatrix} \\ Locations \leftarrow \begin{pmatrix} 0ft \\ -14ft \\ -28ft \end{pmatrix} \\ rows \leftarrow rows(Locations) \\ Loc \leftarrow Locations \\ Moment \leftarrow 0kip \cdot ft \\ \text{while } Loc_{rows} \le L \\ \quad \left| \begin{array}{l} \text{for } i \in 1 .. rows \\ \quad \left| \begin{array}{l} M_i \leftarrow M_{point}\left(Axles_i, Loc_i, L, x\right) \\ Loc_i \leftarrow Loc_i + 0.01ft \end{array} \right. \\ Moment \leftarrow \max\left(\sum M, Moment\right) \end{array} \right. \\ Loc \leftarrow Locations \\ x \leftarrow L - x \\ \text{while } Loc_{rows} \le L \\ \quad \left| \begin{array}{l} \text{for } i \in 1 .. rows \\ \quad \left| \begin{array}{l} M_i \leftarrow M_{point}\left(Axles_i, Loc_i, L, x\right) \\ Loc_i \leftarrow Loc_i + 0.01ft \end{array} \right. \\ Moment \leftarrow \max\left(\sum M, Moment\right) \end{array} \right. \\ Moment \end{array} \right.$$

Range Variable for Graph $z := 0ft, 10ft .. L$

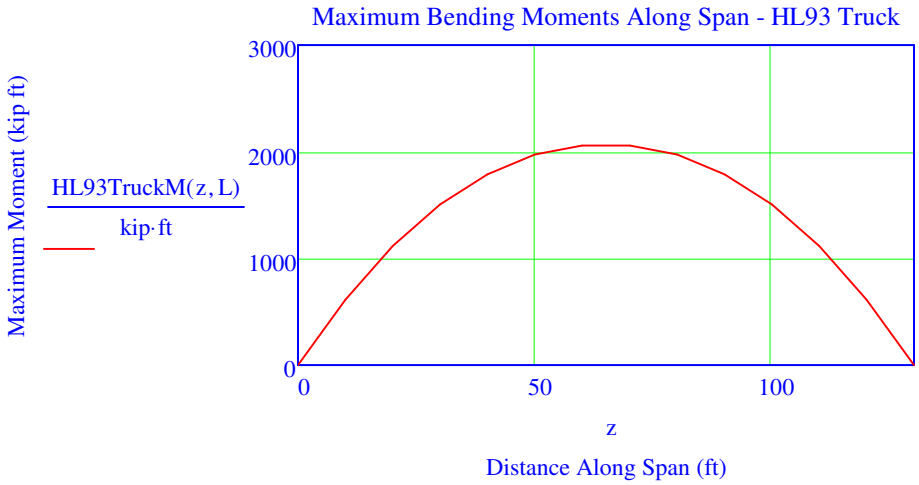

Moments

$$M^{\langle 7 \rangle} := \left| \begin{array}{l} \text{for } i \in rs_L .. rs_R \\ \quad Mom_i \leftarrow HL93TruckM\left(SE_i - P2, L\right) \\ Mom \end{array} \right.$$

Shear

The following function finds the maximum positive shear due to an AASHTO HL93 Truck Load at a section a distance "x" along a simple span of length "L". LRFD 3.6.1.2.2

$$HL93TruckVP(x, L) := \left| \begin{array}{l} Axles \leftarrow \begin{pmatrix} 8kip \\ 32kip \\ 32kip \end{pmatrix} \\ Loc \leftarrow \begin{pmatrix} 0ft \\ -14ft \\ -28ft \end{pmatrix} \\ rows \leftarrow rows(Loc) \\ Shear \leftarrow 0kip \\ \text{while } Loc_{rows} \le L \\ \quad \left| \begin{array}{l} \text{for } i \in 1 .. rows \\ \quad \left| \begin{array}{l} V_i \leftarrow V_{point}\left(Axles_i, Loc_i, L, x\right) \\ Loc_i \leftarrow Loc_i + 0.01ft \end{array} \right. \\ Shear \leftarrow \max\left(\sum V, Shear\right) \end{array} \right. \\ Shear \end{array} \right.$$

The following function finds the maximum negative shear due to an AASHTO HL93 Truck Load at a section a distance "x" along a simple span of length "L". LRFD 3.6.1.2.2

```
HL93TruckVN(x, L) := | Axles ← (32kip, 32kip, 8kip)
                     | Loc ← (0ft, −14ft, −28ft)
                     | rows ← rows(Loc)
                     | Shear ← 0kip
                     | while Loc_rows ≤ L
                     |     for i ∈ 1 .. rows
                     |         V_i ← V_point(Axles_i, Loc_i, L, x)
                     |         Loc_i ← Loc_i + 0.01ft
                     |     Shear ← min(∑V, Shear)
                     | Shear
```

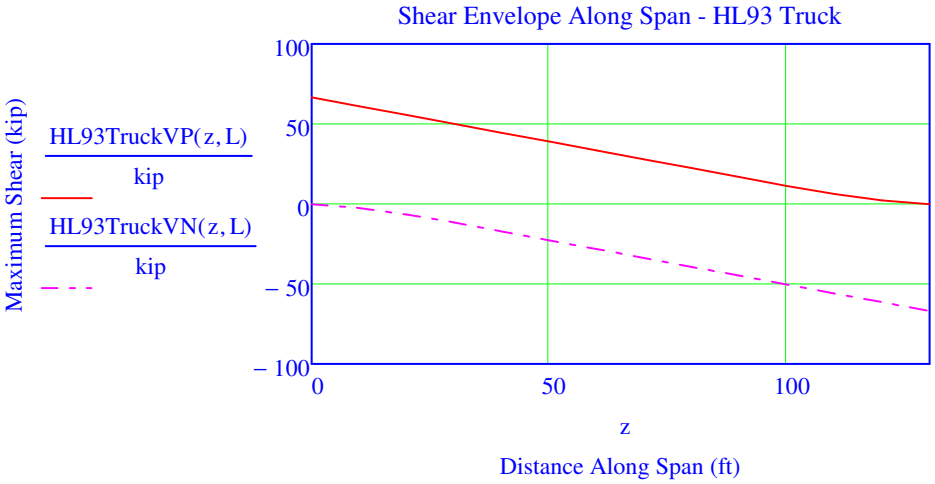

The maximum shear, positive on the first half and negative on the second half, will be returned by the following function. At the centerline of girder, only the positive value is returned.

```
V^⟨7⟩ := | for i ∈ rs_L .. rs_R
         |     v_i ← if(SE_i ≤ GL/2, HL93TruckVP(SE_i − P2, L), HL93TruckVN(SE_i − P2, L))
         | v
```

5.8 Live Load - AASHTO Tandem

Bending Moment

The following function finds the maximum moment due to an AASHTO HL93 Tandem Load at a section a LRFD 3.6.1.2.3

distance "x" along a simple span of length "L".

```
HL93TandemM(x, L) := | Axles ← (25kip, 25kip)
                     | Locations ← (0ft, −4ft)
                     | rows ← rows(Locations)
                     | Moment ← 0kip·ft
                     | while Locations_rows ≤ L
                     |     for i ∈ 1 .. rows
                     |         M_i ← M_point(Axles_i, Locations_i, L, x)
                     |         Locations_i ← Locations_i + 0.01ft
                     |     Moment ← max(∑M, Moment)
                     | Moment
```

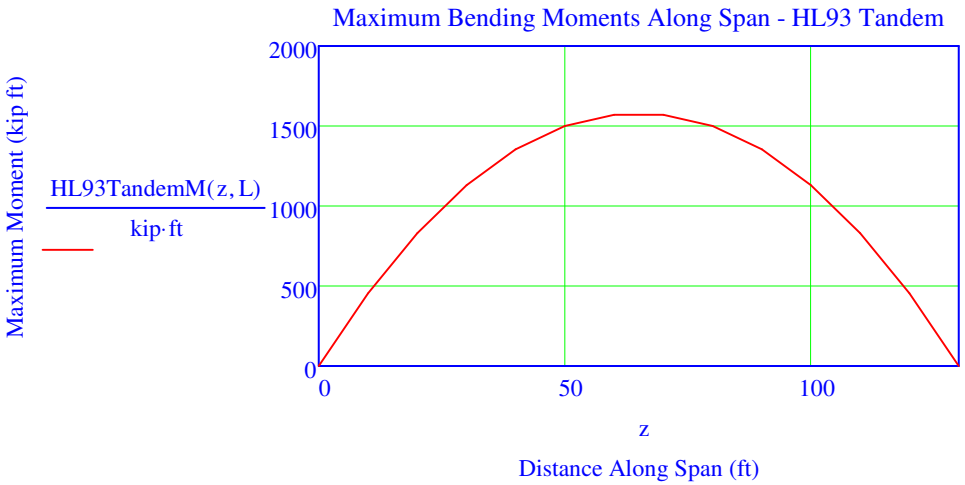

Moments

```
M^⟨8⟩ := | for i ∈ rs_L .. rs_R
         |     Mom_i ← HL93TandemM(SE_i − P2, L)
         | Mom
```

Shear

The following function finds the maximum positive shear due to an AASHTO HL93 Tandem Load at a section a distance "x" along a simple span of length "L". LRFD 3.6.1.2.3

```
HL93TandemVP(x, L) := | Axles ← (25kip, 25kip)
                      | Locations ← (0ft, −4ft)
                      | rows ← rows(Locations)
                      | Shear ← 0kip
                      | while Locations_rows ≤ L
                      |     for i ∈ 1..rows
                      |         V_i ← V_point(Axles_i, Locations_i, L, x)
                      |         Locations_i ← Locations_i + 0.01ft
                      |     Shear ← max(∑V, Shear)
                      | Shear
```

The following function finds the maximum negative shear due to an AASHTO HL93 Tandem Load at a section a distance "x" along a simple span of length "L". LRFD 3.6.1.2.3

```
HL93TandemVN(x, L) := | Axles ← (25kip, 25kip)
                      | Locations ← (0ft, −4ft)
                      | rows ← rows(Locations)
                      | Shear ← 0kip
                      | while Locations_rows ≤ L
                      |     for i ∈ 1..rows
                      |         V_i ← V_point(Axles_i, Locations_i, L, x)
                      |         Locations_i ← Locations_i + 0.01ft
                      |     Shear ← min(∑V, Shear)
                      | Shear
```

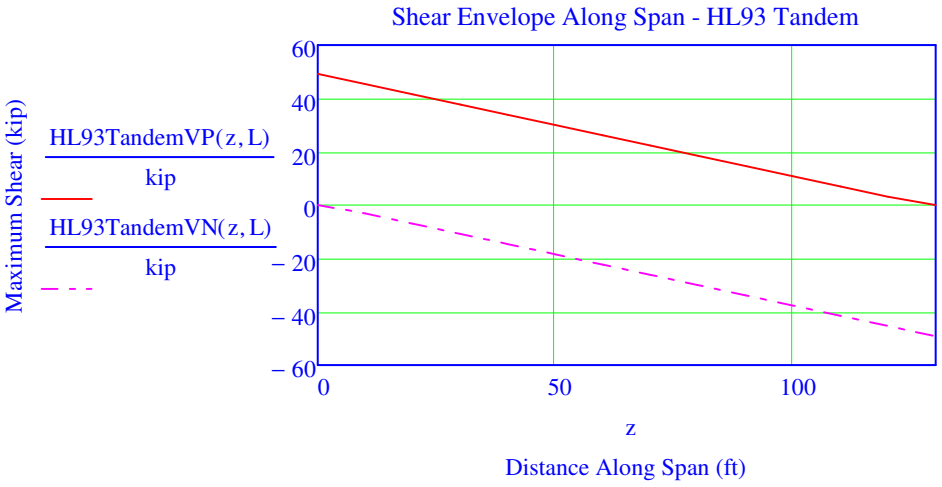

The maximum shear, positive on the first half and negative on the second half, will be returned by the following function. At the centerline of girder, only the positive value is returned.

$$V^{\langle 8 \rangle} := \left| \begin{array}{l} \text{for } i \in rs_L .. rs_R \\ \quad v_i \leftarrow \text{if}\left(SE_i \le \frac{GL}{2}, HL93TandemVP\left(SE_i - P2, L\right), HL93TandemVN\left(SE_i - P2, L\right)\right) \\ v \end{array} \right.$$

5.9 Live Load - AASHTO Lane Load

Moments

$$M^{\langle 9 \rangle} := \left| \begin{array}{l} \text{for } i \in rs_L .. rs_R \\ \quad Mom_i \leftarrow M_{uniform}\left(w_{lane}, L, SE_i - P2\right) \\ Mom \end{array} \right.$$

Maximum positive shear at a point on the span occurs when the lane load occupies the part of the span to the right of that point. Maximum negative shear at a point on the span occurs when the lane load occupies the part of the span to the left of that point.

Shears

$$V^{\langle 9 \rangle} := \left| \begin{array}{l} \text{for } i \in rs_L .. rs_R \\ \quad v_i \leftarrow \text{if}\left[SE_i \le \frac{GL}{2}, \frac{w_{lane} \cdot \left[L - \left(SE_i - P2\right)\right]^2}{2 \cdot L}, -\frac{w_{lane} \cdot \left(SE_i - P2\right)^2}{2 \cdot L}\right] \\ v \end{array} \right.$$

5.10 Maximum Live Load including Dynamic Load Allowance, per lane

The dynamic load allowance shall not applied to pedestrian loads or to the design lane load.

Dynamic Load All. for all limit states except Fatigue $IM := 33 \cdot \%$ LRFD 3.6.2.1

Moments

$$M^{\langle 10\rangle} := \left| \begin{array}{l} \text{for } i \in 1..\text{rows}(SE) \\ \quad Mom_i \leftarrow \max\left(M_{i,7}, M_{i,8}\right)\cdot(1 + IM) + M_{i,9} \\ Mom \end{array} \right.$$

The maximum shear, positive on the first half and negative on the second half, will be returned by the following function. At the centerline of girder, only the positive value is returned.

$$V^{\langle 10\rangle} := \left| \begin{array}{l} \text{for } i \in 1..\text{rows}(SE) - 1 \\ \quad v_i \leftarrow \text{if}\left[SE_i \le \frac{GL}{2}, \max\left(V_{i,7}, V_{i,8}\right)\cdot(1 + IM) + V_{i,9}, \min\left(V_{i,7}, V_{i,8}\right)\cdot(1 + IM) + V_{i,9}\right] \\ v \end{array} \right.$$

Create final row with zeros for shear matrix $V_{\text{rows}(SE),1} := 0\text{kip}$

5.11 Fatigue Live Load

Bending Moment

The following function finds the maximum moment due to an AASHTO Fatigue Truck Load with 30 foot spacing between 32kip axles at a section a distance "x" along a simple span of length "L". A truck moving both directions is checked. LRFD 3.6.1.4

$$HL93TruckMFat(x, L) := \left| \begin{array}{l} Axles \leftarrow \begin{pmatrix} 8\text{kip} \\ 32\text{kip} \\ 32\text{kip} \end{pmatrix} \\ Locations \leftarrow \begin{pmatrix} 0\text{ft} \\ -14\text{ft} \\ -44\text{ft} \end{pmatrix} \\ rows \leftarrow \text{rows}(Locations) \\ Loc \leftarrow Locations \\ Moment \leftarrow 0\text{kip}\cdot\text{ft} \\ \text{while } Loc_{rows} \le L \\ \quad \left| \begin{array}{l} \text{for } i \in 1..rows \\ \quad \left| \begin{array}{l} M_i \leftarrow M_{point}\left(Axles_i, Loc_i, L, x\right) \\ Loc_i \leftarrow Loc_i + 0.01\text{ft} \end{array} \right. \\ Moment \leftarrow \max\left(\sum M, Moment\right) \end{array} \right. \\ Loc \leftarrow Locations \\ x \leftarrow L - x \\ \text{while } Loc_{rows} \le L \\ \quad \left| \begin{array}{l} \text{for } i \in 1..rows \\ \quad M_i \leftarrow M_{point}\left(Axles_i, Loc_i, L, x\right) \end{array} \right. \end{array} \right.$$

$$\text{Loc}_i \leftarrow \text{Loc}_i + 0.01\,\text{ft}$$

$$\text{Moment} \leftarrow \max\left(\sum \text{M}, \text{Moment}\right)$$

Moment

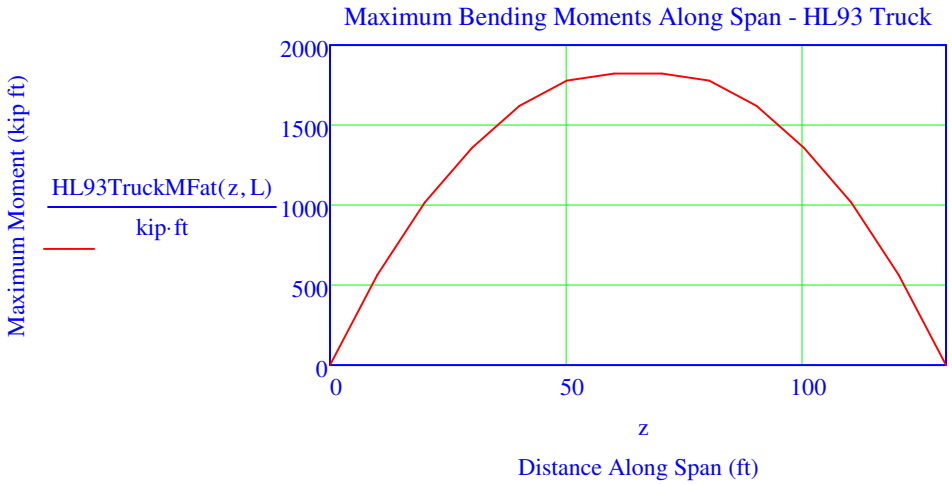

Moments

$$M_{FAT} := \left| \begin{array}{l} \text{for } i \in rs_L .. rs_R \\ \quad \text{Mom}_i \leftarrow \text{HL93TruckMFat}\left(SE_i - P2, L\right) \\ \text{Mom} \end{array} \right.$$

$$M_{FAT_{rows(SE)}} := 0\,\text{kip·ft}$$

$M_{FAT} =$

	1
1	0
2	0
3	63
4	182
5	288
6	461
7	711
8	1235
9	1599
10	1792
11	1795
12	1804
13	1795
14	1792
15	1599
16	...

·kip·ft

Dynamic Load for Fatigue limit state $IM_{FAT} := 15 \cdot \%$ LRFD 3.6.2.1

5.12 Summary of Moments and Shears

Row number of left support $rs_L = 2.0$

Row number of right support $rs_R = 22.0$

Row number of left PS Transfer point $rp = 3.0$

Row number of left critical section for shear $rc = 5.0$

Row number of left harp point $rh = 10.0$

Row number of midspan $rm = 12.0$

Row number of left lifting point $rl_1 = 4.0$

Row number of right lifting point $rl_2 = 20.0$

Row number of left shipping (bunk) point $rb_L = 6.0$

Row number of right shipping (bunk) point $rb_R = 18.0$

Column 1 = Dead Load of Girder between supports after erection
Column 2 = Dead Load of Intermediate Diaphragms
Column 3 = Dead Load of Pad
Column 4 = Dead Load of Slab
Column 5 = Dead Load of Barrier
Column 6 = Dead Load of Future Overlay
Column 7 = Live Load of AASHTO Design Truck
Column 8 = Live Load of AASHTO Design Tandem
Column 9 = Live Load of AASHTO Design Lane
Column 10 = Maximum Live Load Effect including Impact, per lane
Column 11 = Dead Load of Girder between ends after release

$M =$

	1	2	3	4	5	6	7	8	9	10	11
1	0	0	0	0	0	0	0	0	0	0	0
2	0	0	0	0	0	0	0	0	0	0	138
3	70	4	13	42	10	10	68	50	42	133	208
4	203	13	38	121	29	29	197	145	123	385	341
5	322	21	60	191	47	46	312	230	195	609	460
6	518	34	97	308	75	74	501	370	313	979	656
7	805	56	150	479	117	115	775	575	487	1518	943
8	1431	111	267	851	207	205	1363	1020	865	2678	1568
9	1878	149	351	1117	272	269	1764	1335	1136	3482	2016
10	2140	167	400	1274	310	307	1995	1516	1295	3948	2278
11	2146	167	401	1277	311	308	2000	1520	1298	3958	2284
12	2235	186	418	1330	324	320	2060	1575	1352	4092	2373
13	2146	167	401	1277	311	308	2000	1520	1298	3958	2284
14	2140	167	400	1274	310	307	1995	1516	1295	3948	2278
15	1878	149	351	1117	272	269	1764	1335	1136	3482	2016
16	1431	111	267	851	207	205	1363	1020	865	2678	1568
17	805	56	150	479	117	115	775	575	487	1518	943
18	518	34	97	308	75	74	501	370	313	979	656
19	322	21	60	191	47	46	312	230	195	609	460
20	203	13	38	121	29	29	197	145	123	385	341
21	70	4	13	42	10	10	68	50	42	133	208
22	0	0	0	0	0	0	0	0	0	0	138
23	0	0	0	0	0	0	0	0	0	0	0

$\cdot kip \cdot ft$

	1	2	3	4	5	6	7	8	9	10
1	0.00	0.00	0.00	0.00	0.00	0.00	0.00	0.00	0.00	0.00
2	68.78	4.29	12.86	40.93	9.97	9.86	66.83	49.23	41.60	130.48
3	67.69	4.29	12.65	40.28	9.81	9.70	66.26	48.83	40.95	129.07

$V =$

4	65.58	4.29	12.26	39.02	9.50	9.40	65.15	48.07	39.69	126.34
5	63.64	4.29	11.89	37.87	9.22	9.12	64.14	47.36	38.55	123.85
6	60.29	4.29	11.27	35.88	8.74	8.64	62.38	46.14	36.62	119.59
7	55.03	4.29	10.28	32.74	7.97	7.89	59.63	44.23	33.70	113.00
8	41.27	4.29	7.71	24.56	5.98	5.92	52.43	39.23	26.62	96.36
9	27.51	1.43	5.14	16.37	3.99	3.94	45.23	34.23	20.38	80.54
10	14.17	1.43	2.65	8.43	2.05	2.03	38.25	29.38	15.13	66.00
11	13.76	1.43	2.57	8.19	1.99	1.97	38.03	29.23	14.98	65.56
12	0.00	1.43	0.00	0.00	0.00	0.00	30.83	24.23	10.40	51.40
13	-13.76	-1.43	-2.57	-8.19	-1.99	-1.97	-38.03	-29.23	-14.98	-65.55
14	-14.17	-1.43	-2.65	-8.43	-2.05	-2.03	-38.25	-29.38	-15.13	-66.00
15	-27.51	-1.43	-5.14	-16.37	-3.99	-3.94	-45.23	-34.23	-20.38	-80.53
16	-41.27	-4.29	-7.71	-24.56	-5.98	-5.92	-52.43	-39.23	-26.62	-96.35
17	-55.03	-4.29	-10.28	-32.74	-7.97	-7.89	-59.63	-44.23	-33.70	-113.00
18	-60.29	-4.29	-11.27	-35.88	-8.74	-8.64	-62.38	-46.14	-36.62	-119.59
19	-63.64	-4.29	-11.89	-37.87	-9.22	-9.12	-64.13	-47.36	-38.55	-123.85
20	-65.58	-4.29	-12.26	-39.02	-9.50	-9.40	-65.15	-48.07	-39.69	-126.34
21	-67.69	-4.29	-12.65	-40.28	-9.81	-9.70	-66.26	-48.83	-40.95	-129.07
22	-68.78	-4.29	-12.86	-40.93	-9.97	-9.86	-66.83	-49.23	-41.60	-130.48
23	0.00	0.00	0.00	0.00	0.00	0.00	0.00	0.00	0.00	0.00

$\cdot kip$

5.13 Moment Distribution of Live Load

Applicability for use of Live Load Distribution Factors

LRFD 4.6.2.2.1

For typical cross section, use case k

LRFD Table 4.6.2.2.1-1

- Width of deck is constant
- Beams are parallel
- Beams have approximately the same stiffness
- Curvature in plan is less than the limit specified in LRFD 4.6.1.2.4

Multiple presence factors shall not be applied except for exterior girders with special requirement.

LRFD 3.6.1.1.2
LRFD 4.6.2.2.1

Distance from centerline of exterior girder to interior edge of curb/barrier

$d_{bar} := overhang - cw = 2.75\,ft$

Roadway overhang check

$chk_{5,1} := if\left(d_{bar} \le 3ft, "OK", "NG"\right) = "OK"$

Minimum beam count check

$chk_{5,2} := if\left(N_b \ge 4, "OK", "NG"\right) = "OK"$

Distance between the centers of gravity of the basic beam and deck

$e_g := Y_{bs} - Y_{bg} = 41.84 \cdot in$

Longitudinal sitffness parameter

$K_g := \frac{1}{n} \cdot \left(I_g + A_g \cdot e_g^{\,2}\right) = 3599953 \cdot in^4$

LRFD 4.6.2.2.1-1

Distribution Factor (DF) for Moment on interior girder

LRFD 4.6.2.2.2b

Girder spacing check

$$chk_{5,3} := \text{if}(3.5\cdot ft \le S \le 16.0\cdot ft, \text{"OK"}, \text{"NG"}) = \text{"OK"}$$

Slab thickness check

$$chk_{5,4} := \text{if}\left(4.5\cdot in \le t_s \le 12.0\cdot in, \text{"OK"}, \text{"NG"}\right) = \text{"OK"}$$

Beam span check

$$chk_{5,5} := \text{if}(20\cdot ft \le L \le 240\cdot ft, \text{"OK"}, \text{"NG"}) = \text{"OK"}$$

Longitudinal sitffness parameter check

$$chk_{5,6} := \text{if}\left(10^4 in^4 \le K_g \le 7\cdot 10^6 in^4, \text{"OK"}, \text{"NG"}\right) = \text{"OK"}$$

DF for interior girder

$$DF_i := \begin{cases} 0.075 + \left(\frac{S}{9.5\cdot ft}\right)^{0.6}\cdot\left(\frac{S}{L}\right)^{0.2}\cdot\left(\frac{K_g}{L\cdot t_s^3}\right)^{0.1} & \text{if } N_L > 1 \quad = 0.604 \\ 0.06 + \left(\frac{S}{14\cdot ft}\right)^{0.4}\cdot\left(\frac{S}{L}\right)^{0.3}\cdot\left(\frac{K_g}{L\cdot t_s^3}\right)^{0.1} & \text{if } N_L = 1 \end{cases}$$

Distribution Factor (DF) for Moment on exterior girder

For exterior girder design with slab cantilever length equal or less than one-half of the adjacent interior girder spacing, use the live load distribution factor for interior girder. The slab cantilever length is defined as the distance from the centerline of the exterior girder to the edge of the slab. BDM 3.9.4.A

For exterior girder design with slab cantilever length exceeding one-half of the adjacent interior girder spacing, use the lever rule with the multiple presence factor of 1.0 for single lane to determine the live load distribution. The live load used to design the exterior girder shall not be less than the live load used for the adjacent interior girder.

Minimum distance to curb from LL wheel

$$curb_{min.sp} := 2ft$$ LRFD 3.6.1.3.1

$$\begin{aligned} &x \leftarrow S + d_{bar} - curb_{min.sp} \\ &Numerator \leftarrow 0ft \\ &UseAxleWidth \leftarrow 1 \\ &\text{while } x > 0ft \\ &\quad Numerator \leftarrow Numerator + x \\ &\quad \text{if } UseAxleWidth \\ &\quad\quad x \leftarrow x - axlewidth \\ &\quad\quad UseAxleWidth \leftarrow 0 \\ &\quad \text{otherwise} \\ &\quad\quad x \leftarrow x - (12\cdot ft - axlewidth) \\ &\quad\quad UseAxleWidth \leftarrow 1 \\ &Numerator \end{aligned}$$

Lever rule distribution

$$DF_{lever} := \frac{Numerator}{2\cdot S} = 0.654$$

DF for exterior girder

$$DF_e := \begin{cases} DF_i & \text{if } overhang \le 0.5\cdot S \quad = 0.654 \\ \max\left(DF_{lever}, DF_i\right) & \text{otherwise} \end{cases}$$

Reduction in Moment DF for Skewed Bridges (LRFD 4.6.2.2.2e, case k)

Note: Applied when the difference between skew angles of two adjacent lines of support <= 10 deg. LRFD 4.6.2.2.2e

Check on skew angle $chk_{5,7} := \text{if}\left(30\cdot\text{deg} \le \theta_{sk} \le 60\cdot\text{deg}, \text{"OK"}, \text{"NG"}\right) = \text{"OK"}$

Check on girder spacing $chk_{5,8} := \text{if}\left(3.5\cdot\text{ft} \le S \le 16.0\cdot\text{ft}, \text{"OK"}, \text{"NG"}\right) = \text{"OK"}$

Check on girder span $chk_{5,9} := \text{if}\left(20\cdot\text{ft} \le L \le 240\cdot\text{ft}, \text{"OK"}, \text{"NG"}\right) = \text{"OK"}$

Check on girder count $chk_{5,10} := \text{if}\left(N_b \ge 4, \text{"OK"}, \text{"NG"}\right) = \text{"OK"}$

Parameters for skew equation

$$c_1 := \begin{cases} 0.0 & \text{if } \theta_{sk} < 30\cdot\text{deg} \\ 0.25\cdot\left(\frac{K_g}{L\cdot t_s^{\,3}}\right)^{0.25}\cdot\left(\frac{S}{L}\right)^{0.5} & \text{otherwise} \end{cases} = 0.090$$

Reduction Factor for skew $SK := 1 - c_1\cdot\left(\tan\left(\min\left(\theta_{sk}, 60\text{deg}\right)\right)\right)^{1.5} = 0.961$

Reduced DF for moment

$$DF := \begin{cases} SK\cdot DF_i & \text{if girder} = \text{"interior"} \\ SK\cdot DF_e & \text{if girder} = \text{"exterior"} \end{cases} = 0.580$$

Distribution Factor for Fatigue Load

LRFD 3.6.1.4.3b
LRFD 3.6.1.1.2

DF for interior girder (one lane loaded)

$$DF_{iFAT} := \frac{0.06 + \left(\frac{S}{14\cdot\text{ft}}\right)^{0.4}\cdot\left(\frac{S}{L}\right)^{0.3}\cdot\left(\frac{K_g}{L\cdot t_s^{\,3}}\right)^{0.1}}{1.2} = 0.352$$

DF for exterior girder

$$DF_{eFAT} := \begin{cases} DF_{iFAT} & \text{if overhang} \le 0.5\cdot S \\ \max\left(DF_{lever}, DF_{iFAT}\right) & \text{otherwise} \end{cases} = 0.654$$

Reduced DF for moment - Fatigue Loading

$$DF_{FAT} := \begin{cases} SK\cdot DF_{iFAT} & \text{if girder} = \text{"interior"} \\ SK\cdot DF_{eFAT} & \text{if girder} = \text{"exterior"} \end{cases} = 0.338$$

5.14 Shear Distribution of Live Load

Distribution Factor (DF) Method for Shear on interior girder

LRFD 4.6.2.2.3a

Range of applicability (LRFD Table 4.6.2.2.3a-1), case k checks are the same as those for moment so checks above are sufficient.

Shear LL distribution factor - interior girder

$$DF_{vi} := \max\left[0.36 + \frac{S}{25\cdot\text{ft}}, 0.2 + \frac{S}{12\cdot\text{ft}} - \left(\frac{S}{35\cdot\text{ft}}\right)^{2.0}\right] = 0.707$$

Distribution Factor (DF) Method for Shear on exterior girder

BDM 3.9.4.A

For exterior girder design with slab cantilever length equal or less than one-half of the adjacent interior girder spacing, use the live load distribution factor for interior girder. The slab cantilever length is defined as the distance from the centerline of the exterior girder to the edge of the slab.

For exterior girder design with slab cantilever length exceeding one-half of the adjacent interior girder spacing, use the lever rule with the multiple presence factor of 1.0 for single lane to determine the live load distribution. The live load used to design the exterior girder shall not be less than the live load used for the adjacent interior girder.

DF for exterior girder

$$DF_{ve} := \begin{cases} DF_{vi} & \text{if } overhang \le 0.5 \cdot S \\ \max\left(DF_{lever}, DF_{vi}\right) & \text{otherwise} \end{cases} = 0.707$$

Correction Factor for Shear DF for Skewed Bridges

LRFD 4.6.2.2.3c

Check on skew angle - other checks for range of applicability are same as for moment with skew

$$chk_{5,11} := \text{if}\left(0 \cdot deg \le \theta_{sk} \le 60 \cdot deg, \text{"OK"}, \text{"NG"}\right) = \text{"OK"}$$

Skew Correction Factor - Shear

$$SK_v := 1.0 + 0.20 \cdot \left(\frac{L \cdot t_s^{\,3}}{K_g}\right)^{0.3} \cdot \tan\left(\theta_{sk}\right) = 1.065$$

Distribution Factor for Shear

$$DF_v := \begin{cases} SK_v \cdot DF_{vi} & \text{if girder} = \text{"interior"} \\ SK_v \cdot DF_{ve} & \text{if girder} = \text{"exterior"} \end{cases} = 0.753$$

6. Computation of Stresses for Dead and Live Loads

Home

6.1 Summary of Stresses

Row number of left support $rs_L = 2.0$

Row number of right support $rs_R = 22.0$

Row number of left PS Transfer point $rp = 3.0$

Row number of left critical section for shear $rc = 5.0$

Row number of left harp point $rh = 10.0$

Row number of midspan $rm = 12.0$

Row number of left lifting point $rl_1 = 4.0$

Row number of right lifting point $rl_2 = 20.0$

Row number of left shipping (bunk) point $rb_L = 6.0$

Row number of right shipping (bunk) point $rb_R = 18.0$

Column 1 = Dead Load of Girder between supports after erection
Column 2 = Dead Load of Intermediate Diaphragms
Column 3 = Dead Load of Pad
Column 4 = Dead Load of Slab
Column 5 = Dead Load of Barrier
Column 6 = Dead Load of Future Overlay
Column 7 = Live Load of AASHTO Design Truck
Column 8 = Live Load of AASHTO Design Tandem
Column 9 = Live Load of AASHTO Design Lane
Column 10 = Maximum Live Load Effect including Impact, per girder
Column 11 = Dead Load of Girder between ends after release

	Noncomposite	Composite
S - top of slab		$S_{ts} = 53919 \cdot in^3$
S - top of girder	$S_{tg} = 19154 \cdot in^3$	$S_t = 44450 \cdot in^3$
S - bottom of girder	$S_{bg} = 20593 \cdot in^3$	$S_b = 25069 \cdot in^3$

Columns 1-4 and 11 act upon the noncomposite section
Columns 5-6 act upon the composite section
Columns 7-10 act upon the composite section and are multiplied by the distribution factor

Negative stress indicates compression.

Stress at the top of the girder: Stress at the bottom of the girder: Stress at the top of the CIP Slab:

$ST :=$ for $j \in 1..4$
  for $i \in 1..\text{rows}(SE)$
    $\text{Stress}_{i,j} \leftarrow -\frac{M_{i,j}}{S_{tg}}$
for $j \in 5..6$
  for $i \in 1..\text{rows}(SE)$
    $\text{Stress}_{i,j} \leftarrow -\frac{M_{i,j}}{S_{t}}$
for $j \in 7..10$
  for $i \in 1..\text{rows}(SE)$
    $\text{Stress}_{i,j} \leftarrow -\frac{M_{i,j} \cdot DF}{S_{t}}$
for $i \in 1..\text{rows}(SE)$
  $\text{Stress}_{i,11} \leftarrow -\frac{M_{i,11}}{S_{tg}}$
Stress

$SB :=$ for $j \in 1..4$
  for $i \in 1..\text{rows}(SE)$
    $\text{Stress}_{i,j} \leftarrow \frac{M_{i,j}}{S_{bg}}$
for $j \in 5..6$
  for $i \in 1..\text{rows}(SE)$
    $\text{Stress}_{i,j} \leftarrow \frac{M_{i,j}}{S_{b}}$
for $j \in 7..10$
  for $i \in 1..\text{rows}(SE)$
    $\text{Stress}_{i,j} \leftarrow \frac{M_{i,j} \cdot DF}{S_{b}}$
for $i \in 1..\text{rows}(SE)$
  $\text{Stress}_{i,11} \leftarrow \frac{M_{i,11}}{S_{bg}}$
Stress

$SS :=$ for $j \in 1..4$
  for $i \in 1..\text{rows}(SE)$
    $\text{Stress}_{i,j} \leftarrow 0\text{ksi}$
for $j \in 5..6$
  for $i \in 1..\text{rows}(SE)$
    $\text{Stress}_{i,j} \leftarrow -\frac{M_{i,j}}{S_{ts}}$
for $j \in 7..10$
  for $i \in 1..\text{rows}(SE)$
    $\text{Stress}_{i,j} \leftarrow -\frac{M_{i,j} \cdot DF}{S_{ts}}$
for $i \in 1..\text{rows}(SE)$
  $\text{Stress}_{i,11} \leftarrow 0\text{ksi}$
Stress

$ST =$

	1	2	3	4	5	6	7	8	9	10	11
1	0.00	0.00	0.00	0.00	0.00	0.00	0.00	0.00	0.00	0.00	0.00
2	0.00	0.00	0.00	0.00	0.00	0.00	0.00	0.00	0.00	0.00	-0.09
3	-0.04	-0.00	-0.01	-0.03	-0.00	-0.00	-0.01	-0.01	-0.01	-0.02	-0.13
4	-0.13	-0.01	-0.02	-0.08	-0.01	-0.01	-0.03	-0.02	-0.02	-0.06	-0.21
5	-0.20	-0.01	-0.04	-0.12	-0.01	-0.01	-0.05	-0.04	-0.03	-0.10	-0.29
6	-0.32	-0.02	-0.06	-0.19	-0.02	-0.02	-0.08	-0.06	-0.05	-0.15	-0.41
7	-0.50	-0.03	-0.09	-0.30	-0.03	-0.03	-0.12	-0.09	-0.08	-0.24	-0.59
8	-0.90	-0.07	-0.17	-0.53	-0.06	-0.06	-0.21	-0.16	-0.14	-0.42	-0.98
9	-1.18	-0.09	-0.22	-0.70	-0.07	-0.07	-0.28	-0.21	-0.18	-0.55	-1.26
10	-1.34	-0.10	-0.25	-0.80	-0.08	-0.08	-0.31	-0.24	-0.20	-0.62	-1.43
11	-1.34	-0.10	-0.25	-0.80	-0.08	-0.08	-0.31	-0.24	-0.20	-0.62	-1.43
12	-1.40	-0.12	-0.26	-0.83	-0.09	-0.09	-0.32	-0.25	-0.21	-0.64	-1.49
13	-1.34	-0.10	-0.25	-0.80	-0.08	-0.08	-0.31	-0.24	-0.20	-0.62	-1.43
14	-1.34	-0.10	-0.25	-0.80	-0.08	-0.08	-0.31	-0.24	-0.20	-0.62	-1.43
15	-1.18	-0.09	-0.22	-0.70	-0.07	-0.07	-0.28	-0.21	-0.18	-0.55	-1.26
16	-0.90	-0.07	-0.17	-0.53	-0.06	-0.06	-0.21	-0.16	-0.14	-0.42	-0.98
17	-0.50	-0.03	-0.09	-0.30	-0.03	-0.03	-0.12	-0.09	-0.08	-0.24	-0.59
18	-0.32	-0.02	-0.06	-0.19	-0.02	-0.02	-0.08	-0.06	-0.05	-0.15	-0.41
19	-0.20	-0.01	-0.04	-0.12	-0.01	-0.01	-0.05	-0.04	-0.03	-0.10	-0.29
20	-0.13	-0.01	-0.02	-0.08	-0.01	-0.01	-0.03	-0.02	-0.02	-0.06	-0.21
21	-0.04	-0.00	-0.01	-0.03	-0.00	-0.00	-0.01	-0.01	-0.01	-0.02	-0.13

$\cdot\text{ksi}$

22	0.00	0.00	0.00	0.00	0.00	0.00	0.00	0.00	0.00	0.00	-0.09
23	0.00	0.00	0.00	0.00	0.00	0.00	0.00	0.00	0.00	0.00	0.00

SB =

	1	2	3	4	5	6	7	8	9	10	11
1	0.00	0.00	0.00	0.00	0.00	0.00	0.00	0.00	0.00	0.00	0.00
2	0.00	0.00	0.00	0.00	0.00	0.00	0.00	0.00	0.00	0.00	0.08
3	0.04	0.00	0.01	0.02	0.00	0.00	0.02	0.01	0.01	0.04	0.12
4	0.12	0.01	0.02	0.07	0.01	0.01	0.05	0.04	0.03	0.11	0.20
5	0.19	0.01	0.04	0.11	0.02	0.02	0.09	0.06	0.05	0.17	0.27
6	0.30	0.02	0.06	0.18	0.04	0.04	0.14	0.10	0.09	0.27	0.38
7	0.47	0.03	0.09	0.28	0.06	0.06	0.22	0.16	0.14	0.42	0.55
8	0.83	0.06	0.16	0.50	0.10	0.10	0.38	0.28	0.24	0.74	0.91
9	1.09	0.09	0.20	0.65	0.13	0.13	0.49	0.37	0.32	0.97	1.17
10	1.25	0.10	0.23	0.74	0.15	0.15	0.55	0.42	0.36	1.10	1.33
11	1.25	0.10	0.23	0.74	0.15	0.15	0.56	0.42	0.36	1.10	1.33
12	1.30	0.11	0.24	0.78	0.16	0.15	0.57	0.44	0.38	1.14	1.38
13	1.25	0.10	0.23	0.74	0.15	0.15	0.56	0.42	0.36	1.10	1.33
14	1.25	0.10	0.23	0.74	0.15	0.15	0.55	0.42	0.36	1.10	1.33
15	1.09	0.09	0.20	0.65	0.13	0.13	0.49	0.37	0.32	0.97	1.17
16	0.83	0.06	0.16	0.50	0.10	0.10	0.38	0.28	0.24	0.74	0.91
17	0.47	0.03	0.09	0.28	0.06	0.06	0.22	0.16	0.14	0.42	0.55
18	0.30	0.02	0.06	0.18	0.04	0.04	0.14	0.10	0.09	0.27	0.38
19	0.19	0.01	0.04	0.11	0.02	0.02	0.09	0.06	0.05	0.17	0.27
20	0.12	0.01	0.02	0.07	0.01	0.01	0.05	0.04	0.03	0.11	0.20
21	0.04	0.00	0.01	0.02	0.00	0.00	0.02	0.01	0.01	0.04	0.12
22	0.00	0.00	0.00	0.00	0.00	0.00	0.00	0.00	0.00	0.00	0.08
23	0.00	0.00	0.00	0.00	0.00	0.00	0.00	0.00	0.00	0.00	0.00

·ksi

SS =

	1	2	3	4	5	6	7	8	9	10	11
1	0.00	0.00	0.00	0.00	0.00	0.00	0.00	0.00	0.00	0.00	0.00
2	0.00	0.00	0.00	0.00	0.00	0.00	0.00	0.00	0.00	0.00	0.00
3	0.00	0.00	0.00	0.00	-0.00	-0.00	-0.01	-0.01	-0.01	-0.02	0.00
4	0.00	0.00	0.00	0.00	-0.01	-0.01	-0.03	-0.02	-0.02	-0.05	0.00
5	0.00	0.00	0.00	0.00	-0.01	-0.01	-0.04	-0.03	-0.03	-0.08	0.00
6	0.00	0.00	0.00	0.00	-0.02	-0.02	-0.06	-0.05	-0.04	-0.13	0.00
7	0.00	0.00	0.00	0.00	-0.03	-0.03	-0.10	-0.07	-0.06	-0.20	0.00
8	0.00	0.00	0.00	0.00	-0.05	-0.05	-0.18	-0.13	-0.11	-0.35	0.00
9	0.00	0.00	0.00	0.00	-0.06	-0.06	-0.23	-0.17	-0.15	-0.45	0.00
10	0.00	0.00	0.00	0.00	-0.07	-0.07	-0.26	-0.20	-0.17	-0.51	0.00
11	0.00	0.00	0.00	0.00	-0.07	-0.07	-0.26	-0.20	-0.17	-0.51	0.00
12	0.00	0.00	0.00	0.00	-0.07	-0.07	-0.27	-0.20	-0.17	-0.53	0.00

·ksi

13	0.00	0.00	0.00	0.00	-0.07	-0.07	-0.26	-0.20	-0.17	-0.51	0.00
14	0.00	0.00	0.00	0.00	-0.07	-0.07	-0.26	-0.20	-0.17	-0.51	0.00
15	0.00	0.00	0.00	0.00	-0.06	-0.06	-0.23	-0.17	-0.15	-0.45	0.00
16	0.00	0.00	0.00	0.00	-0.05	-0.05	-0.18	-0.13	-0.11	-0.35	0.00
17	0.00	0.00	0.00	0.00	-0.03	-0.03	-0.10	-0.07	-0.06	-0.20	0.00
18	0.00	0.00	0.00	0.00	-0.02	-0.02	-0.06	-0.05	-0.04	-0.13	0.00
19	0.00	0.00	0.00	0.00	-0.01	-0.01	-0.04	-0.03	-0.03	-0.08	0.00
20	0.00	0.00	0.00	0.00	-0.01	-0.01	-0.03	-0.02	-0.02	-0.05	0.00
21	0.00	0.00	0.00	0.00	-0.00	-0.00	-0.01	-0.01	-0.01	-0.02	0.00
22	0.00	0.00	0.00	0.00	0.00	0.00	0.00	0.00	0.00	0.00	0.00
23	0.00	0.00	0.00	0.00	0.00	0.00	0.00	0.00	0.00	0.00	0.00

7. Prestressing Forces and Stresses

Home

7.1 Stress Limits for Prestressing Strands

Service limit state after all losses	$f_{pe.lim} := 0.80 \cdot f_{py} = 194.4 \cdot ksi$	LRFD Table 5.9.3-1
Stress limit immediately prior to transfer (after relaxation losses prior to transfer)	$f_{pbt.lim} := 0.75 \cdot f_{pu} = 202.5 \cdot ksi$	
Initial stress in PS at jacking. WSDOT practice is to set the jacking force equal to the AASHTO limit immediately prior to transfer.	$f_{pj} := f_{pbt.lim} = 202.5 \cdot ksi$	

7.2 Allowable Concrete Stresses at Service Limit State

Compressive Stress Limits in PS Concrete After PS Losses

Effective Prestress and Permanent Loads - Transfer and Lifting	$f_{c.TL.lim} := -0.65 \cdot f'_{ci} = -4.875 \cdot ksi$	LRFD 5.9.4.2.1 LRFD 5.5.3.1 BDM 5.2.3.B
Effective Prestress and Permanent Loads - Shipping and Erection	$f_{c.SH.lim} := -0.65 \cdot f'_{c} = -5.525 \cdot ksi$	
Effective Prestress and Permanent Loads - Final Stresses	$f_{c.PP.lim} := -0.45 \cdot f'_{c} = -3.825 \cdot ksi$	
Effective Prestress, Permanent Loads and Transient Loads - Final Stresses	$f_{c.PPT.lim} := -0.60 \cdot f'_{c} = -5.100 \cdot ksi$	
Fatigue 1 LL plus 1/2 (Effective Prestress and Permanent Loads)	$f_{c.FA.lim} := -0.40 \cdot f'_{c} = -3.400 \cdot ksi$	

Tensile Stress Limits in PS Concrete

Notes:
1. For the service load combinations which involves traffic loading, tension stress in members with bonded prestressing strands should be investigated using Service III load combination.
2. Tension in precompressed tensile zone assuming uncracked section

Stress at transfer and lifting (bonded reinf, other than precompressed tensile zone)	$f_{t.TL.lim} := 0.19 \cdot \sqrt{f'_{ci} \div ksi} \cdot ksi = 0.520 \cdot ksi$	BDM 5.2.3.B
Stress during shipping - plumb girder with impact (bonded reinf, other than precompressed tensile zone)	$f_{t.SP.lim} := 0.19 \cdot \sqrt{f'_{c} \div ksi} \cdot ksi = 0.554 \cdot ksi$	BDM 5.2.3.B
Stress during shipping - inclined girder without impact (bonded reinf, other than precompressed tensile zone)	$f_{t.SI.lim} := 0.24 \cdot \sqrt{f'_{c} \div ksi} \cdot ksi = 0.700 \cdot ksi$	BDM 5.2.3.B
Limit in precompressed tensile zone	$f_{t.PCT.lim} := 0ksi$	BDM 5.2.3.B

7.3 Jacking Forces

Jacking force for straight strands	$P_{js} := f_{pj} \cdot N_s \cdot A_p = 1142.5 \cdot kip$	
Jacking force for harped strands	$P_{jh} := f_{pj} \cdot N_h \cdot A_p = 527.3 \cdot kip$	

Jacking force for temporary strands

$$P_{jt} := f_{pj} \cdot N_t \cdot A_p = 263.7 \cdot kip$$

Total jacking force

$$P_{jack} := P_{jh} + P_{js} + P_{jt} = 1933.5 \cdot kip$$

7.4 C.G. of Prestress

Final number of permanent prestress strands

$$N_p := N_s + N_h = 38$$

Total area of permanent prestress strands

$$A_{ps} := A_p \cdot N_p = 8.246 \cdot in^2$$

Area of temporary strands

$$A_{temp} := A_p \cdot N_t = 1.302 \cdot in^2$$

Area of final plus temporary strands

$$A_{pstemp} := A_p \cdot (N_t + N_p) = 9.548 \cdot in^2$$

c.g. to straight strands from bottom of girder, E (check specific girder pattern in BDM girder details - WF girder shown)

$$E := \begin{cases} 4 \cdot in & \text{if } N_s \le 2 \\ \dfrac{2 \cdot 4in + (N_s - 2) \cdot 2in}{N_s} & \text{if } 3 \le N_s \le 6 \\ \dfrac{4 \cdot 2in + (N_s - 4) \cdot 4in}{N_s} & \text{if } 7 \le N_s \le 8 \\ \dfrac{4 \cdot 4in + (N_s - 4) \cdot 2in}{N_s} & \text{if } 9 \le N_s \le 20 \\ \dfrac{16 \cdot 2in + (N_s - 16) \cdot 4in}{N_s} & \text{if } 21 \le N_s \le 32 \\ \dfrac{16 \cdot 2in + 16 \cdot 4in + (N_s - 32) \cdot 6in}{N_s} & \text{if } 33 \le N_s \le 42 \\ \dfrac{16 \cdot 2in + 16 \cdot 4in + 10 \cdot 6in + (N_s - 42) \cdot 8in}{N_s} & \text{if } 43 \le N_s \le 46 \\ \text{"error"} & \text{otherwise} \end{cases}$$

$$E = 2.769 \cdot in$$

c.g. of straight strands to c.g. of girder

$$e_s := Y_{bg} - E = 32.891 \cdot in$$

c.g. of temporary strands to c.g. of girder

$$e_{temp} := 2 \cdot in - Y_{tg} = -36.340 \cdot in$$

Eccentricity for harped strand at Midspan

c.g. to harped strands from bottom of girder, F_{CL}, at midspan

$$F_{CL} := 4in$$

Minimum F_{CL} per construction constraints

$$F_{CL.lim} := \begin{cases} 4in & \text{if } 1 \le N_h \le 12 \\ \dfrac{12 \cdot 4in + (N_h - 12) \cdot 6in}{N_h} & \text{if } 13 \le N_h \le 24 \\ \dfrac{12 \cdot 4in + 12 \cdot 6in + (N_h - 24) \cdot 8in}{N_h} & \text{if } 25 \le N_h \le 36 \\ \text{"error"} & \text{otherwise} \end{cases}$$

$F_{CL.lim} = 4.000 \cdot in$ BDM 5.1.3.C.2

Check if F_{CL} is too close to bottom of girder

$chk_{7,1} := \text{if}(F_{CL} \ge F_{CL.lim}, \text{"OK"}, \text{"NG"}) = \text{"OK"}$

Eccentricity for harped strand at end of girder

Distance from the top of girder to the c.g. of the harped strands at the end of girder

$F_o := 9in$

Limit to how close F_o may be to top of girder per strand pattern shown in the standard plans

$F_{o.lim} := \left| \begin{array}{l} \text{increment} \leftarrow 1 \\ e \leftarrow 2in \\ \text{for } i \in 1 .. N_h \\ \quad \left| \begin{array}{l} \text{if increment} \\ \quad \left| \begin{array}{l} \text{increment} \leftarrow 0 \\ e \leftarrow e + 2in \end{array} \right. \\ \text{increment} \leftarrow 1 \quad \text{otherwise} \\ \text{Product} \leftarrow \text{Product} + e \end{array} \right. \\ \text{return } \dfrac{\text{Product}}{N_h} \end{array} \right.$ $= 9.000 \cdot in$

Check if F_o is too close to top of girder

$chk_{7,2} := \text{if}(F_o \ge F_{o.lim}, \text{"OK"}, \text{"NG"}) = \text{"OK"}$

Strand Eccentricity Table

Harped strand slope for c.g. of strands

$$slope_h := \frac{d_g - F_o - F_{CL}}{x_h} = 0.094877$$

Maximum slope on individual strand

$$maxslope_h := \frac{d_g - F_o - F_{CL} + (F_{o.lim} - 4in)}{x_h} = 0.1027$$

Limit for maximum slope on individual strand

$$slope_{lim} := \begin{cases} \dfrac{1}{6} & \text{if } d_b = 0.5in \\ \dfrac{1}{8} & \text{if } d_b = 0.6in \\ \text{"error"} & \text{otherwise} \end{cases} = 0.1250$$ BDM 5.1.3.C.2

Check slope of harped strands

$chk_{7,3} := \text{if}(maxslope_h \le slope_{lim}, \text{"OK"}, \text{"NG"}) = \text{"OK"}$

Holddown force at jacking (for shop drawing check)

$$P_{hd} := P_{jh} \cdot \sin\left(\operatorname{atan}\left(slope_h\right)\right) = 49.8 \cdot kip$$

Eccentricity of harped, total permanent, and total permanent + temporary strands at each girder section. Measured from girder neutral axis (positive toward bottom of girder)

$$EC := \left| \begin{array}{l} \text{for } i \in 1 .. rows(SE) \\ \quad EC_{i,1} \leftarrow Y_{bg} - \left[F_{CL} + slope_h \cdot \left(x_h - SE_i\right)\right] \text{ if } SE_i < x_h \\ \quad EC_{i,1} \leftarrow Y_{bg} - F_{CL} \text{ if } x_h \le SE_i \le GL - x_h \\ \quad EC_{i,1} \leftarrow Y_{bg} - \left[F_{CL} + slope_h \cdot \left(SE_i + x_h - GL\right)\right] \text{ if } SE_i > GL - x_h \\ \quad EC_{i,2} \leftarrow \dfrac{e_s \cdot N_s + EC_{i,1} \cdot N_h}{N_p} \\ \quad EC_{i,3} \leftarrow \dfrac{EC_{i,2} \cdot N_p + e_{temp} \cdot N_t}{N_p + N_t} \\ EC \end{array} \right.$$

Column 1 - Harped strand eccentricity to girder neutral axis
Column 2 - Combined Straight and Harped Strands eccentricity
Column 3 - Combined Straight, Harped and Temporary Strands eccentricity

$EC =$ ·in

	1	2	3
1	-29.340	13.239	6.478
2	-27.094	13.948	7.091
3	-25.924	14.318	7.410
4	-23.647	15.037	8.031
5	-21.561	15.696	8.600
6	-17.955	16.834	9.583
7	-12.293	18.622	11.127
8	2.508	23.296	15.164
9	17.309	27.970	19.201
10	31.660	32.502	23.115
11	31.660	32.502	23.115
12	31.660	32.502	23.115
13	31.660	32.502	23.115
14	31.660	32.502	23.115
15	17.309	27.970	19.201
16	2.508	23.296	...

7.5 Loss of Prestress

LRFD 5.9.5

Stress in strands before prestress transfer

Time at tansfer

$$t_o := 1day$$

Prestress Relaxation at transfer

$$\Delta f_{pR0} := -\frac{\log\left(\dfrac{24.0 \cdot t_o}{day}\right)}{40} \cdot \left(\frac{f_{pj}}{f_{py}} - 0.55\right) \cdot f_{pj}$$

BDM 5.1.4.D

$$\Delta f_{pR0} = -1.980 \cdot ksi$$

Prestress immediately before transfer $f_{pbt} := f_{pj} + \Delta f_{pR0} = 200.520 \cdot ksi$

Initial Loss due to Elastic Shortening at Midspan

Estimate of elastic shortening in permanent strands immediately after transfer $x_1 := -\left(f_{pbt} - 0.7 \cdot f_{pu}\right) = -11.5 \cdot ksi$ BDM 5.1.4.A.1

Estimate of elastic shortening in temporary strands immediately after transfer $x_2 := -\left(f_{pbt} - 0.7 \cdot f_{pu}\right) = -11.5 \cdot ksi$ BDM 5.1.4.A.1

Estimate of total prestressing force P $P := A_{ps} \cdot \left(f_{pbt} + x_1\right) + A_{temp} \cdot \left(f_{pbt} + x_2\right) = 1804.6 \cdot kip$

Solve Block for prestress after elastic shortening Given LRFD 5.9.5.2.3a

Total prestressing force P $P = A_{ps} \cdot \left(f_{pbt} + x_1\right) + A_{temp} \cdot \left(f_{pbt} + x_2\right)$

Elastic shortening in perm. strands immediately after transfer $x_1 = -\left[\frac{E_p}{E_{ci}} \cdot \left(\frac{P}{A_g} + \frac{P \cdot EC_{rm,3} \cdot EC_{rm,2}}{I_g} - \frac{M_{rm,11} \cdot EC_{rm,2}}{I_g}\right)\right]$

Elastic shortening in temp. strands immediately after transfer $x_2 = -\left[\frac{E_p}{E_{ci}} \cdot \left(\frac{P}{A_g} + \frac{P \cdot EC_{rm,3} \cdot e_{temp}}{I_g} - \frac{M_{rm,11} \cdot e_{temp}}{I_g}\right)\right]$

Solve for the 3 unknowns in the 3 equations above $\begin{pmatrix} P_{ps} \\ \Delta f_{pES} \\ \Delta f_{pEST} \end{pmatrix} := \text{Find}\left(P, x_1, x_2\right)$

Stress in prestress strands immediately after transfer $P_{ps} = 1798.2 \cdot kip$

Initial loss in perm. strands due to elastic shortening $\Delta f_{pES} = -13.055 \cdot ksi$

Initial loss in temp. strands due to elastic shortening $\Delta f_{pEST} = -6.716 \cdot ksi$

Elastic Gain due to Diaphragms, Deck and SIDL at Midspan:

BDM 5.1.4.D

Elastic gain due to diaphragms and deck $\Delta f_{pED1} := \frac{E_p}{E_c} \cdot \left[\frac{\left(M_{rm,2} + M_{rm,3} + M_{rm,4}\right) \cdot EC_{rm,2}}{I_g}\right] = 4.986 \cdot ksi$

Elastic gain due to SIDL (including barrier weight but not traffic overlay) $\Delta f_{pED2} := \frac{E_p}{E_c} \cdot \left[\frac{M_{rm,5} \cdot \left(Y_b - Y_{bg} + EC_{rm,2}\right)}{I_c}\right] = 0.702 \cdot ksi$

Approximate Lump Sum Estimate of Time Dependent Losses

The Approximate Estimate of Time-Dependent Losses of AASHTO LRFD 5.9.5.3 may be used for precast BDM 5.1.4.B

prestressed girders with composite decks as long as the conditions set forth in AASHTO are satisfied: LRFD 5.9.5.3

- Normal density concrete
- Concrete is either steam or moist cured
- Prestressing is by low relaxation strands
- Sited in average exposure condition and temperatures

Concrete density check

$$chk_{7,4} := \text{if}\left(0.155\text{kcf} \geq w_{cE} \geq 0.135\text{kcf}, \text{"OK"}, \text{"NG"}\right) = \text{"OK"}$$

Correction factore for ambient air RH

$$\gamma_h := 1.7 - 0.01 \cdot (H \div \%) = 0.950$$

Correction factor for concrete strength at transfer

$$\gamma_{st} := \frac{5}{1 + f'_{ci} \div \text{ksi}} = 0.588$$

Approx lump sum long term PS losses at shipping

$$\Delta f_{pLTH} := -\left(3 \cdot \frac{f_{pbt} \cdot A_{ps}}{\text{ksi} \cdot A_g} \gamma_h \cdot \gamma_{st} + 3 \cdot \gamma_h \cdot \gamma_{st} + 0.6\right) \text{ksi} = -5.278 \cdot \text{ksi}$$

BDM 5.1.4.E.2

Approx lump sum long term PS losses

$$\Delta f_{pLT} := -\left(10.0 \cdot \frac{f_{pbt} \cdot A_{ps}}{\text{ksi} \cdot A_g} \gamma_h \cdot \gamma_{st} + 12.0 \cdot \gamma_h \cdot \gamma_{st} + 2.4\right) \text{ksi} = -19.111 \cdot \text{ksi}$$

LRFD 5.9.5.3

Loss due to Removal of Temporary Strands at Midspan

Force in temporary strands before removal

$$P_{tr} := A_{temp} \cdot \left(f_{pbt} + \Delta f_{pEST} + \Delta f_{pLTH}\right) = 245.5 \cdot \text{kip}$$

Change in stress at c.g. permanent strands after removal of temporary strands

$$f_{ptr} := \frac{P_{tr}}{A_g} + \frac{P_{tr} \cdot e_{temp} \cdot EC_{rm,2}}{I_g} = -0.129 \cdot \text{ksi}$$

Loss in permanent strands due to removal of temporary strands

$$\Delta f_{ptr} := \frac{E_p}{E_c} \cdot f_{ptr} = -0.626 \cdot \text{ksi}$$

Total Prestress Losses - Permanent Strands at Midspan

BDM 5.1.4.D

Total PS loss by lump sum estimate

$$\Delta f_{pT} := \Delta f_{pR0} + \Delta f_{pES} + \Delta f_{ptr} + \Delta f_{pED1} + \Delta f_{pED2} + \Delta f_{pLT}$$

$$\Delta f_{pT} = -29.084 \cdot \text{ksi}$$

Effective Prestress at Midspan

Effective prestress at midspan

$$f_{pe} := f_{pj} + \Delta f_{pT} = 173.416 \cdot \text{ksi}$$

Check effective prestress limit

$$chk_{7,5} := \text{if}\left(f_{pe} \leq f_{pe.lim}, \text{"OK"}, \text{"NG"}\right) = \text{"OK"}$$

LRFD 5.9.3

Effective prestress force at midspan

$$P_e := A_{ps} \cdot f_{pe} = 1430.0 \cdot \text{kip}$$

7.6 Effective Prestress Modifier for Sections within Transfer Length

Multiply effective prestress force by modifier below at each section to account for force in prestressing within the transfer length. The prestressing force may be assumed to vary linearly from 0.0 at the point where bonding commences (free end of strand) to a maximum at the transfer length.

$$TRAN := \left| \begin{array}{l} \text{for } i \in 1 .. \text{rows}(SE) \\ \quad \left| \begin{array}{l} TR_i \leftarrow \dfrac{SE_i}{l_t} \text{ if } SE_i < l_t \\ TR_i \leftarrow 1 \text{ if } l_t \le SE_i \le GL - l_t \\ TR_i \leftarrow \dfrac{GL - SE_i}{l_t} \text{ if } GL - l_t < SE_i \end{array} \right. \\ TR \end{array} \right.$$

$TRAN =$

	1
1	0.000
2	0.658
3	1.000
4	1.000
5	1.000
6	1.000
7	1.000
8	1.000
9	1.000
10	1.000
11	1.000
12	1.000
13	1.000
14	1.000
15	1.000
16	...

8. Stresses at Service and Fatigue Limit States

Home

Negative stress indicates compression.

8.1 Service I for Casting Yard Stage (At Release)

Effective Prestress in Permanent Strands $f_{peP1} := f_{pj} + \Delta f_{pR0} + \Delta f_{pES} = 187.5 \cdot ksi$

Effective Prestress in Temporary Strands $f_{peT1} := f_{pj} + \Delta f_{pR0} + \Delta f_{pEST} = 193.8 \cdot ksi$

Stress in girder due to prestressing:

$PS1 :=$ for $i \in 1 .. rows(SE)$

$P_p \leftarrow f_{peP1} \cdot TRAN_i \cdot A_{ps}$

$P_t \leftarrow f_{peT1} \cdot TRAN_i \cdot A_{temp}$

$PS_{i,1} \leftarrow -\left(\frac{P_p}{A_g} - \frac{P_p \cdot EC_{i,2}}{S_{tg}} + \frac{P_t}{A_g} - \frac{P_t \cdot e_{temp}}{S_{tg}}\right)$

$PS_{i,2} \leftarrow -\left(\frac{P_p}{A_g} + \frac{P_p \cdot EC_{i,2}}{S_{bg}} + \frac{P_t}{A_g} + \frac{P_t \cdot e_{temp}}{S_{bg}}\right)$

PS

$PS1 =$ ·ksi

	Top Stress	Bottom Stress
	1	2
1	0.000	0.000
2	-0.855	-1.676
3	-1.270	-2.577
4	-1.212	-2.631
5	-1.159	-2.680
6	-1.067	-2.766
7	-0.923	-2.900
8	-0.546	-3.251
9	-0.169	-3.601
10	0.197	-3.942
11	0.197	-3.942
12	0.197	-3.942
13	0.197	-3.942
14	0.197	-3.942
15	-0.169	-3.601
16	-0.546	...

Find total Service I stress which includes:

- Prestress
- Girder Dead Load between ends

$STRESS1 :=$ for $i \in 1 .. rows(SE)$

$STR_{i,1} \leftarrow PS1_{i,1} + ST_{i,11}$

$STR_{i,2} \leftarrow PS1_{i,2} + SB_{i,11}$

STR

$STRESS1 =$ ·ksi

	Top Stress	Bottom Stress
	1	2
1	0.000	0.000
2	-0.941	-1.596
3	-1.401	-2.455
4	-1.426	-2.432
5	-1.447	-2.412
6	-1.478	-2.383
7	-1.513	-2.351
8	-1.528	-2.337
9	-1.431	-2.427
10	-1.230	-2.614

11	-1.234	-2.611
12	-1.290	-2.559
13	-1.234	-2.611
14	-1.230	-2.614
15	-1.431	-2.427
16	-1.528	...

Maximum compressive stress allowed: $f_{c.TL.lim} = -4.875 \cdot ksi$

Maximum tensile stress allowed: $f_{t.TL.lim} = 0.520 \cdot ksi$

Check compressive stress $chk_{8,1} := if\left(min(STRESS1) \geq f_{c.TL.lim}, "OK", "NG"\right) = "OK"$

Check tensile stress (with bonded reinforcement) $chk_{8,2} := if\left(max(STRESS1) \leq f_{t.TL.lim}, "OK", "NG"\right) = "OK"$

8.2 Service I after Temporary Strand Removal

Effective Prestress in Permanent Strands $f_{peP2} := f_{pj} + \Delta f_{pR0} + \Delta f_{pES} + \Delta f_{pLTH} + \Delta f_{ptr} = 181.6 \cdot ksi$

Stress in girder due to prestressing:

$$PS2 := \left| \begin{array}{l} \text{for } i \in 1 .. rows(SE) \\ \quad P_p \leftarrow f_{peP2} \cdot TRAN_i \cdot A_{ps} \\ \quad PS_{i,1} \leftarrow -\left(\frac{P_p}{A_g} - \frac{P_p \cdot EC_{i,2}}{S_{tg}}\right) \\ \quad PS_{i,2} \leftarrow -\left(\frac{P_p}{A_g} + \frac{P_p \cdot EC_{i,2}}{S_{bg}}\right) \\ PS \end{array} \right.$$

$PS2 =$

	Top Stress	Bottom Stress
	1	2
1	0.000	0.000
2	-0.349	-1.733
3	-0.502	-2.662
4	-0.446	-2.714
5	-0.394	-2.762
6	-0.305	-2.845
7	-0.166	-2.975
8	0.200	-3.315
9	0.565	-3.655
10	0.919	-3.984
11	0.919	-3.984
12	0.919	-3.984
13	0.919	-3.984
14	0.919	-3.984
15	0.565	-3.655
16	0.200	...

$\cdot ksi$

Find total Service I stress which includes:
- Prestress
- Girder Dead Load between supports

	Top Stress	Bottom Stress
	1	2

$$\text{STRESS2} := \left| \begin{array}{l} \text{for } i \in 1 .. \text{rows}(SE) \\ \quad \left| \begin{array}{l} STR_{i,1} \leftarrow PS2_{i,1} + ST_{i,1} \\ STR_{i,2} \leftarrow PS2_{i,2} + SB_{i,1} \end{array} \right. \\ STR \end{array} \right.$$

$$\text{STRESS2} = \begin{array}{|c|r|r|} \hline 1 & 0.000 & 0.000 \\ 2 & -0.349 & -1.733 \\ 3 & -0.546 & -2.621 \\ 4 & -0.573 & -2.596 \\ 5 & -0.596 & -2.575 \\ 6 & -0.630 & -2.543 \\ 7 & -0.670 & -2.506 \\ 8 & -0.697 & -2.481 \\ 9 & -0.611 & -2.560 \\ 10 & -0.422 & -2.737 \\ 11 & -0.425 & -2.734 \\ 12 & -0.481 & -2.682 \\ 13 & -0.425 & -2.734 \\ 14 & -0.422 & -2.737 \\ 15 & -0.611 & -2.560 \\ 16 & -0.697 & \ldots \\ \hline \end{array} \cdot ksi$$

Maximum compressive stress allowed: $f_{c.SH.lim} = -5.525 \cdot ksi$

Maximum tensile stress allowed: $f_{t.SP.lim} = 0.554 \cdot ksi$

Check compressive stress $chk_{8,3} := \text{if}\left(\min(\text{STRESS2}) \geq f_{c.SH.lim}, \text{"OK"}, \text{"NG"}\right) = \text{"OK"}$

Check tensile stress (with bonded reinforcement) $chk_{8,4} := \text{if}\left(\max(\text{STRESS2}) \leq f_{t.SP.lim}, \text{"OK"}, \text{"NG"}\right) = \text{"OK"}$

8.3 Service I after Deck and Diaphragm Placement

Effective Prestress in Permanent Strands $f_{peP3} := f_{pj} + \Delta f_{pR0} + \Delta f_{pES} + \Delta f_{pLT} + \Delta f_{ptr} + \Delta f_{pED1} = 172.7 \cdot ksi$

Stress in girder due to prestressing:

$$\text{PS3} := \left| \begin{array}{l} \text{for } i \in 1 .. \text{rows}(SE) \\ \quad \left| \begin{array}{l} P_p \leftarrow f_{peP3} \cdot TRAN_i \cdot A_{ps} \\ PS_{i,1} \leftarrow -\left(\dfrac{P_p}{A_g} - \dfrac{P_p \cdot EC_{i,2}}{S_{tg}}\right) \\ PS_{i,2} \leftarrow -\left(\dfrac{P_p}{A_g} + \dfrac{P_p \cdot EC_{i,2}}{S_{bg}}\right) \end{array} \right. \\ PS \end{array} \right.$$

$$\text{PS3} = \begin{array}{|c|r|r|} \hline & \text{Top Stress} & \text{Bottom Stress} \\ & 1 & 2 \\ \hline 1 & 0.000 & 0.000 \\ 2 & -0.332 & -1.649 \\ 3 & -0.478 & -2.532 \\ 4 & -0.424 & -2.582 \\ 5 & -0.375 & -2.628 \\ 6 & -0.290 & -2.706 \\ 7 & -0.158 & -2.830 \\ 8 & 0.190 & -3.153 \\ 9 & 0.538 & -3.477 \\ 10 & 0.875 & -3.790 \\ 11 & 0.875 & -3.790 \\ \hline \end{array} \cdot ksi$$

12	0.875	-3.790
13	0.875	-3.790
14	0.875	-3.790
15	0.538	-3.477
16	0.190	...

Find total Service I stress which includes:
- Prestress
- Girder Dead Load between supports
- Diaphragm Dead Load
- Slab and Pad Dead Load

$$STRESS3 := \left| \begin{array}{l} \text{for } i \in 1 .. \text{rows}(SE) \\ \quad STR_{i,1} \leftarrow PS3_{i,1} + \sum_{j=1}^{4} ST_{i,j} \\ \quad STR_{i,2} \leftarrow PS3_{i,2} + \sum_{j=1}^{4} SB_{i,j} \\ STR \end{array} \right.$$

$STRESS3 =$ ·ksi

	Top Stress 1	Bottom Stress 2
1	0.000	0.000
2	-0.332	-1.649
3	-0.559	-2.457
4	-0.659	-2.363
5	-0.747	-2.281
6	-0.890	-2.148
7	-1.091	-1.962
8	-1.477	-1.603
9	-1.652	-1.440
10	-1.620	-1.470
11	-1.626	-1.464
12	-1.738	-1.360
13	-1.626	-1.464
14	-1.620	-1.470
15	-1.652	-1.440
16	-1.477	...

Maximum compressive stress allowed: $f_{c.PP.lim} = -3.825 \cdot ksi$

Maximum tensile stress allowed: $f_{t.PCT.lim} = 0.000 \cdot ksi$

Check compressive stress $chk_{8,5} := \text{if}\left(\min(STRESS3) \geq f_{c.PP.lim}, \text{"OK"}, \text{"NG"}\right) = \text{"OK"}$

Check tensile stress (with bonded reinforcement) $chk_{8,6} := \text{if}\left(\max(STRESS3) \leq f_{t.PCT.lim}, \text{"OK"}, \text{"NG"}\right) = \text{"OK"}$

8.4 Service I for Superimposed Dead Load (SIDL) - Bridge Site 2

Effective Prestress in Permanent Strands $f_{peP4} := f_{pj} + \Delta f_{pR0} + \Delta f_{pES} + \Delta f_{pLT} + \Delta f_{ptr} + \Delta f_{pED1} + \Delta f_{pED2} = 173.4 \cdot ksi$

Stress in girder due to prestressing:

	Top Stress 1	Bottom Stress 2

$$PS4 := \left| \begin{array}{l} \text{for } i \in 1..\text{rows}(SE) \\ \quad P_p \leftarrow f_{peP4} \cdot TRAN_i \cdot A_{ps} \\ \quad PS_{i,1} \leftarrow -\left(\frac{P_p}{A_g} - \frac{P_p \cdot EC_{i,2}}{S_{tg}} \right) \\ \quad PS_{i,2} \leftarrow -\left(\frac{P_p}{A_g} + \frac{P_p \cdot EC_{i,2}}{S_{bg}} \right) \\ PS \end{array} \right.$$

$PS4 =$ ·ksi

1	0.000	0.000
2	-0.333	-1.655
3	-0.480	-2.543
4	-0.426	-2.593
5	-0.377	-2.638
6	-0.292	-2.717
7	-0.158	-2.842
8	0.191	-3.166
9	0.540	-3.491
10	0.878	-3.805
11	0.878	-3.805
12	0.878	-3.805
13	0.878	-3.805
14	0.878	-3.805
15	0.540	-3.491
16	0.191	...

Find total Service I stress which includes:

- Prestress
- Girder Dead Load between supports
- Diaphragm Dead Load
- Slab and Pad Dead Load
- Barrier SIDL

$$STRESS4 := \left| \begin{array}{l} \text{for } i \in 1..\text{rows}(SE) \\ \quad STR_{i,1} \leftarrow PS4_{i,1} + \sum_{j=1}^{5} ST_{i,j} \\ \quad STR_{i,2} \leftarrow PS4_{i,2} + \sum_{j=1}^{5} SB_{i,j} \\ \quad STR_{i,3} \leftarrow \sum_{j=1}^{5} SS_{i,j} \\ STR \end{array} \right.$$

$STRESS4 =$ ·ksi

	Top Stress	Bottom Stress	Slab Top Stress
	1	2	3
1	0.000	0.000	0.000
2	-0.333	-1.655	0.000
3	-0.563	-2.462	-0.002
4	-0.669	-2.360	-0.007
5	-0.762	-2.270	-0.010
6	-0.912	-2.124	-0.017
7	-1.123	-1.918	-0.026
8	-1.532	-1.516	-0.046
9	-1.723	-1.324	-0.061
10	-1.700	-1.337	-0.069
11	-1.706	-1.331	-0.069
12	-1.821	-1.221	-0.072
13	-1.706	-1.331	-0.069
14	-1.700	-1.337	-0.069
15	-1.723	-1.324	-0.061
16	-1.532	-1.516	...

Maximum compressive stress allowed - girder: $f_{c.PP.lim} = -3.825 \cdot ksi$

Maximum tensile stress allowed: $f_{t.PCT.lim} = 0.000 \cdot ksi$

Check compressive stress in girder

$$chk_{8,7} := if\left(\min\left(STRESS4^{\langle 1\rangle}, STRESS4^{\langle 2\rangle}\right) \geq f_{c.PP.lim}, "OK", "NG"\right) = "OK"$$

Check tensile stress in girder (with bonded reinforcement)

$$chk_{8,8} := if\left(\max\left(STRESS4^{\langle 1\rangle}, STRESS4^{\langle 2\rangle}\right) \leq f_{t.PCT.lim}, "OK", "NG"\right) = "OK"$$

8.5 Service I for Final with Live Load - Bridge Site 3 - Compressive Stresses

Effective Prestress in Permanent Strands

$$f_{peP5} := f_{pe} = 173.4 \cdot ksi$$

Stress in girder due to prestressing:

$$PS5 := \left| \begin{array}{l} \text{for } i \in 1 .. rows(SE) \\ \quad P_p \leftarrow f_{peP5} \cdot TRAN_i \cdot A_{ps} \\ \quad PS_{i,1} \leftarrow -\left(\frac{P_p}{A_g} - \frac{P_p \cdot EC_{i,2}}{S_{tg}}\right) \\ \quad PS_{i,2} \leftarrow -\left(\frac{P_p}{A_g} + \frac{P_p \cdot EC_{i,2}}{S_{bg}}\right) \\ PS \end{array} \right.$$

$PS5 =$

	Top Stress 1	Bottom Stress 2
1	0.000	0.000
2	-0.333	-1.655
3	-0.480	-2.543
4	-0.426	-2.593
5	-0.377	-2.638
6	-0.292	-2.717
7	-0.158	-2.842
8	0.191	-3.166
9	0.540	-3.491
10	0.878	-3.805
11	0.878	-3.805
12	0.878	-3.805
13	0.878	-3.805
14	0.878	-3.805
15	0.540	-3.491
16	0.191	...

$\cdot ksi$

Find total Service I stress which includes:

- Prestress
- Girder Dead Load between supports
- Diaphragm Dead Load
- Slab and Pad Dead Load
- Barrier SIDL
- Traffic Overlay
- Live Load

To maximize bottom compressive stress, the Live Load is left off.

	Top Stress 1	Bottom Stress 2	Slab Top Stress 3
1	0.000	0.000	0.000
2	-0.333	-1.655	0.000
3	-0.587	-2.458	-0.022
4	-0.737	-2.346	-0.063
5	-0.869	-2.248	-0.099

$$STRESS5 := \left| \begin{array}{l} \text{for } i \in 1 .. \text{rows}(SE) \\ \quad STR_{i,1} \leftarrow PS5_{i,1} + \sum_{j=1}^{6} ST_{i,j} + ST_{i,10} \\ \quad STR_{i,2} \leftarrow PS5_{i,2} + \sum_{j=1}^{6} SB_{i,j} \\ \quad STR_{i,3} \leftarrow \sum_{j=1}^{6} SS_{i,j} + SS_{i,10} \\ STR \end{array} \right.$$

$STRESS5 =$ ·ksi

6	-1.085	-2.088	-0.160
7	-1.392	-1.862	-0.248
8	-2.007	-1.418	-0.438
9	-2.341	-1.195	-0.570
10	-2.401	-1.190	-0.647
11	-2.410	-1.183	-0.649
12	-2.549	-1.067	-0.672
13	-2.410	-1.183	-0.649
14	-2.401	-1.190	-0.647
15	-2.341	-1.195	-0.570
16	-2.007	-1.418	...

Maximum compressive stress allowed - girder: $f_{c.PPT.lim} = -5.100 \cdot ksi$

Check compressive stress in girder $chk_{8,9} := \text{if}\left(\min\left(STRESS5^{\langle 1 \rangle}, STRESS5^{\langle 2 \rangle}\right) \geq f_{c.PPT.lim}, \text{"OK"}, \text{"NG"}\right) = \text{"OK"}$

8.6 Fatigue I for Final with Live Load - Bridge Site 3 - Compressive Stresses

Live Load Stresses from the factored Fatigue Load:

$$S_{FATLL} := \left| \begin{array}{l} \text{for } i \in 1 .. \text{rows}(SE) \\ \quad Stress_{i,1} \leftarrow -\dfrac{\gamma_{LLfat} \cdot M_{FAT_i} \cdot DF_{FAT} \cdot (1 + IM_{FAT})}{S_t} \\ \quad Stress_{i,2} \leftarrow \dfrac{\gamma_{LLfat} \cdot M_{FAT_i} \cdot DF_{FAT} \cdot (1 + IM_{FAT})}{S_b} \\ Stress \end{array} \right.$$

$S_{FATLL} =$ ·ksi

	Top Stress 1	Bottom Stress 2
1	0.000	0.000
2	0.000	0.000
3	-0.010	0.018
4	-0.029	0.051
5	-0.045	0.080
6	-0.073	0.129
7	-0.112	0.199
8	-0.194	0.345
9	-0.252	0.446
10	-0.282	0.500
11	-0.283	0.501
12	-0.284	0.504
13	-0.283	0.501
14	-0.282	0.500
15	-0.252	0.446
16	-0.194	...

Find total Fatigue I stress which includes:

- 1/2 Prestress
- 1/2 Girder Dead Load between supports
- 1/2 Diaphragm Dead Load
- 1/2 Slab and Pad Dead Load
- 1/2 Barrier SIDL
- 1/2 Future Overlay SIDL
- Fatigue Live Load

To maximize bottom compressive stress, the Fatigue Live Load is left off.

$$STRESS6 := \left| \begin{array}{l} \text{for } i \in 1..\text{rows}(SE) \\ \quad STR_{i,1} \leftarrow \dfrac{PS5_{i,1} + \sum_{j=1}^{6} ST_{i,j}}{2} + S_{FATLL_{i,1}} \\ \quad STR_{i,2} \leftarrow \dfrac{PS5_{i,2} + \sum_{j=1}^{6} SB_{i,j}}{2} \\ STR \end{array} \right.$$

$STRESS6 =$ (Top Stress, Bottom Stress) $\cdot ksi$

	1	2
1	0.000	0.000
2	-0.167	-0.828
3	-0.293	-1.229
4	-0.367	-1.173
5	-0.432	-1.124
6	-0.539	-1.044
7	-0.689	-0.931
8	-0.988	-0.709
9	-1.150	-0.598
10	-1.173	-0.595
11	-1.177	-0.592
12	-1.238	-0.534
13	-1.177	-0.592
14	-1.173	-0.595
15	-1.150	-0.598
16	-0.988	...

Maximum compressive stress allowed - girder: $f_{c.FA.lim} = -3.400 \cdot ksi$

Check compressive stress in girder $chk_{8,10} := \text{if}\left(\min(STRESS6) \geq f_{c.FA.lim}, \text{"OK"}, \text{"NG"}\right) = \text{"OK"}$

8.7 Service III for Final with Live Load - Bridge Site 3 - Tensile Stresses

Find total Service III stress which includes:

- Prestress
- Girder Dead Load between supports
- Diaphragm Dead Load
- Slab and Pad Dead Load
- Barrier SIDL
- Traffic Overlay
- Live Load (factored)

$$STRESS7 := \left| \begin{array}{l} \text{for } i \in 1..\text{rows}(SE) \\ \quad STR_{i,1} \leftarrow PS5_{i,1} + \sum_{j=1}^{6} ST_{i,j} + \gamma_{LLserIII} \cdot ST_{i,10} \\ \quad STR_{i,2} \leftarrow PS5_{i,2} + \sum_{j=1}^{6} SB_{i,j} + \gamma_{LLserIII} \cdot SB_{i,10} \\ STR \end{array} \right.$$

$STRESS7 =$ (Top Stress, Bottom Stress) $\cdot ksi$

	1	2
1	0.000	0.000
2	-0.333	-1.655
3	-0.583	-2.428
4	-0.725	-2.260
5	-0.850	-2.112
6	-1.055	-1.870
7	-1.344	-1.525
8	-1.923	-0.823
9	-2.232	-0.421
10	-2.277	-0.313
11	-2.286	-0.304
12	-2.421	-0.158
13	-2.286	-0.304

14	-2.277	-0.313
15	-2.232	-0.421
16	-1.923	...

Maximum tensile stress allowed - girder: $f_{t.PCT.lim} = 0.000 \cdot ksi$

Check tensile stress in girder (with bonded reinforcement) $chk_{8,11} := if\left(\max\left(STRESS7^{\langle 1 \rangle}, STRESS7^{\langle 2 \rangle}\right) \le f_{t.PCT.lim}, "OK", "NG"\right) = "OK$

9. Strength Limit State

Home

9.1 Ultimate Moments

Factored bending moments for Strength 1 Limit State (ultimate):

$$M_u := \left| \begin{array}{l} \text{for } i \in 1 .. \text{rows}(SE) \\ UM_i \leftarrow \eta \cdot \left(\gamma_{DC} \cdot \sum_{j=1}^{5} M_{i,j} + \gamma_{DW} \cdot M_{i,6} + \gamma_{LL} \cdot DF \cdot M_{i,10} \right) \\ UM \end{array} \right.$$

$M_u =$ ·kip·ft

	1
1	0
2	0
3	324
4	941
5	1489
6	2397
7	3723
8	6613
9	8649
10	9834
11	9859
12	10253
13	9859
14	9834
15	8649
16	...

9.2 Flexural Resistance

LRFD 5.7.3

The approximate method using the rectangular stress distribution of AASHTO LRFD 5.7.3 is used below. It is known that this method underestimates the flexural resistance due to factors such as not accounting for higher strength concrete for the girder, not accounting for the top flange of the precast girder, excessive "c" dimensions causing the flexural resistance factor to be reduced, etc. If higher capacity or improved accuracy is needed, it is recommended to use the Nonlinear Strain Compatibility Analysis procedure described in the PCI Journal, Jan-Feb 2005, "Flexural Strength of Reinforced and Prestressed Concrete T-Beams". Areas of mild steel tension and compression reinforcement are conservatively assumed to be zero.

Check for validity of f_{ps} eqn at midspan

$$chk_{9,1} := \text{if}\left(f_{pe} \geq 0.5 \cdot f_{pu}, \text{"OK"}, \text{"NG"}\right) = \text{"OK"}$$

Factor for determination of c

$$k := 2 \cdot \left(1.04 - \frac{f_{py}}{f_{pu}}\right) = 0.28$$

LRFD 5.7.3.1.1

Depth of compression flange

$$h_f := t_s = 7.0 \cdot in$$

Find stress in prestressing steel at nominal flexural resistance

Strands at all sections are assumed to be fully developed.

Distance from extreme compression fiber to the centroid of the prestressing tendons

$$d_{p_i} := h_f + Y_{tg} + EC_{i,2}$$

Distance between neutral axis and compression face for flanged (T) section behavior

$$c_{fI_i} := \frac{A_{ps}\cdot f_{pu} - 0.85\cdot f'_{cs}\cdot(b_e - b_w)\cdot h_f}{0.85\cdot f'_{cs}\cdot\beta_1\cdot b_w + k\cdot A_{ps}\cdot\frac{f_{pu}}{d_{p_i}}}$$

LRFD 5.7.3.1.1

Distance between neutral axis and compression face for rectangular section

$$c_{rI_i} := \frac{A_{ps}\cdot f_{pu}}{0.85\cdot f'_{cs}\cdot\beta_1\cdot b_e + k\cdot A_{ps}\cdot\frac{f_{pu}}{d_{p_i}}}$$

LRFD 5.7.3.1.1

Neutral axis distance:
If the compression block for the rectangular section behavior is contained within the top flange, use the c for rectangular section behavior. Otherwise, use the c for T section behavior.

$$c_I := \left|\begin{array}{l} \text{for } i \in 1..\text{rows}(SE) \\ \quad c_i \leftarrow c_{rI_i} \text{ if } \beta_1\cdot c_{rI_i} \le h_f \\ \quad c_i \leftarrow c_{fI_i} \text{ otherwise} \\ c \end{array}\right.$$

LRFD 5.7.3.2.2
LRFD 5.7.3.2.3

$d_p =$

	1
1	58.58
2	59.29
3	59.66
4	60.38
5	61.04
6	62.17
7	63.96
8	68.64
9	73.31
10	77.84
11	77.84
12	77.84
13	77.84
14	77.84
15	73.31
16	...

·in

$c_{fI} =$

	1
1	18.198
2	18.280
3	18.323
4	18.404
5	18.477
6	18.602
7	18.792
8	19.258
9	19.683
10	20.062
11	20.062
12	20.062
13	20.062
14	20.062
15	19.683
16	...

·in

$c_{rI} =$

	1
1	9.432
2	9.437
3	9.439
4	9.444
5	9.449
6	9.456
7	9.467
8	9.494
9	9.518
10	9.538
11	9.538
12	9.538
13	9.538
14	9.538
15	9.518
16	...

·in

$c_I =$

	1
1	18.198
2	18.280
3	18.323
4	18.404
5	18.477
6	18.602
7	18.792
8	19.258
9	19.683
10	20.062
11	20.062
12	20.062
13	20.062
14	20.062
15	19.683
16	...

·in

Average stress in prestressing steel at nominal flexural resistance

$$f_{psI_i} := f_{pu}\cdot\left(1 - k\cdot\frac{c_{I_i}}{d_{p_i}}\right)$$

	1
1	246.514
2	246.690
3	246.781
4	246.956
5	247.114
6	247.381

LRFD 5.7.3.1.1

$f_{psI} =$

7	247.789
8	248.788
9	249.702
10	250.516
11	250.516
12	250.516
13	250.516
14	250.516
15	249.702
16	...

$\cdot ksi$

Development Length Factor

$$\kappa := \text{if}\left(d_g > 24in, 1.6, 1\right) = 1.6$$

LRFD 5.11.4.2

Required development length at midspan (conservative to use for entire girder)

$$l_d := \kappa \cdot \left(\frac{f_{psI_{rm}}}{ksi} - \frac{2}{3} \cdot \frac{f_{pe}}{ksi} \right) \cdot d_b = 129.51 \cdot in$$

LRFD 5.11.4.2

Reduced stress in prestressing steel at nominal flexural resistance at ends of girder

Within the transfer and development lengths at the ends of the girder, the stress in the prestressing steel at nominal flexural resistance must be reduced as shown in AASHTO LRFD Figure C5.11.4.2-1.

LRFD 5.11.4.2

$f_{ps} :=$ for $i \in 1 .. \text{rows}(SE)$

$FPS_i \leftarrow f_{pe} \cdot TRAN_i$ if $SE_i \le l_t$

$FPS_i \leftarrow f_{pe} + \frac{SE_i - l_t}{l_d - l_t} \cdot \left(f_{psI_i} - f_{pe} \right)$ if $l_t < SE_i \le l_d$

$FPS_i \leftarrow f_{psI_i}$ if $l_d < SE_i < GL - l_d$

$FPS_i \leftarrow f_{pe} + \frac{GL - l_t - SE_i}{l_d - l_t} \cdot \left(f_{psI_i} - f_{pe} \right)$ if $GL - l_d \le SE_i < GL - l_t$

$FPS_i \leftarrow f_{pe} \cdot TRAN_i$ if $SE_i \ge GL - l_t$

FPS

$f_{ps} =$

	1
1	0.00
2	114.05
3	173.42
4	192.29
5	209.67
6	239.86
7	247.79
8	248.79
9	249.70
10	250.52
11	250.52
12	250.52
13	250.52
14	250.52
15	249.70
16	...

$\cdot ksi$

Recalculate stress block depth based on reduced stress in prestressing steel

Distance between neutral axis and compression face for flanged (T) section behavior

$$c_{f_i} := \frac{A_{ps} \cdot f_{ps_i} - 0.85 \cdot f'_{cs} \cdot (b_e - b_w) \cdot h_f}{0.85 \cdot f'_{cs} \cdot \beta_1 \cdot b_w}$$

Distance between neutral axis and compression face for rectangular section

$$c_{r_i} := \frac{A_{ps} \cdot f_{ps_i}}{0.85 \cdot f'_{cs} \cdot \beta_1 \cdot b_e}$$

Neutral axis distance:
If the compression block for the rectangular section behavior is contained within the top flange, use the c for rectangular section behavior. Otherwise, use the c for T section behavior.

$$c := \left| \begin{array}{l} \text{for } i \in 1 .. \text{rows}(SE) \\ \quad \left| \begin{array}{l} c_i \leftarrow c_{r_i} \text{ if } \beta_1 \cdot c_{r_i} \le h_f \\ c_i \leftarrow c_{f_i} \text{ otherwise} \end{array} \right. \\ c \end{array} \right.$$

Depth of equivalent stress block

$$a_i := \beta_1 \cdot c_i$$

$c_f =$

	1
1	-96.639
2	-43.509
3	-15.854
4	-7.062
5	1.033
6	15.098
7	18.792
8	19.258
9	19.683
10	20.062
11	20.062
12	20.062
13	20.062
14	20.062
15	19.683
16	...

·in

$c_r =$

	1
1	0.000
2	4.172
3	6.344
4	7.034
5	7.670
6	8.774
7	9.064
8	9.101
9	9.134
10	9.164
11	9.164
12	9.164
13	9.164
14	9.164
15	9.134
16	...

·in

$c =$

	1
1	0.000
2	4.172
3	6.344
4	7.034
5	7.670
6	15.098
7	18.792
8	19.258
9	19.683
10	20.062
11	20.062
12	20.062
13	20.062
14	20.062
15	19.683
16	...

·in

$a =$

	1
1	0.000
2	3.546
3	5.392
4	5.979
5	6.519
6	12.833
7	15.973
8	16.369
9	16.731
10	17.053
11	17.053
12	17.053
13	17.053
14	17.053
15	16.731
16	...

·in

Nominal flexural resistance

$$M_n := \left| \begin{array}{l} \text{for } i \in 1 .. \text{rows}(SE) \\ \quad \left| \begin{array}{l} MN_i \leftarrow A_{ps} \cdot f_{ps_i} \cdot \left(d_{p_i} - \frac{a_i}{2} \right) + 0.85 \cdot f'_{cs} \cdot (b_e - b_w) \cdot h_f \cdot \left(\frac{a_i}{2} - \frac{h_f}{2} \right) \text{ if } h_f < a_i \\ MN_i \leftarrow A_{ps} \cdot f_{ps_i} \cdot \left(d_{p_i} - \frac{a_i}{2} \right) \text{ otherwise} \end{array} \right. \\ MN \end{array} \right.$$

Distance from extreme compression fiber to the centroid of the extreme tension steel element

$$d_t := h_f + d_g - s_{bottom} = 79.000 \cdot in$$

LRFD 5.5.4.2.1

Flexure resistance factor

$$\phi_i := if\left(c_i > 0, \phi_p\left(d_t, c_i\right), 1.0\right)$$

Factored flexural resistance

$$M_{r_i} := \phi_i \cdot M_{n_i}$$

$M_n =$

	1
1	0
2	4508
3	6788
4	7583
5	8324
6	9606
7	10171
8	11003
9	11837
10	12649
11	12649
12	12649
13	12649
14	12649
15	11837
16	...

$\cdot kip \cdot ft$

$\phi =$

	1
1	1.00
2	1.00
3	1.00
4	1.00
5	1.00
6	1.00
7	1.00
8	1.00
9	1.00
10	1.00
11	1.00
12	1.00
13	1.00
14	1.00
15	1.00
16	...

$M_r =$

	1
1	0
2	4508
3	6788
4	7583
5	8324
6	9606
7	10171
8	11003
9	11837
10	12649
11	12649
12	12649
13	12649
14	12649
15	11837
16	...

$\cdot kip \cdot ft$

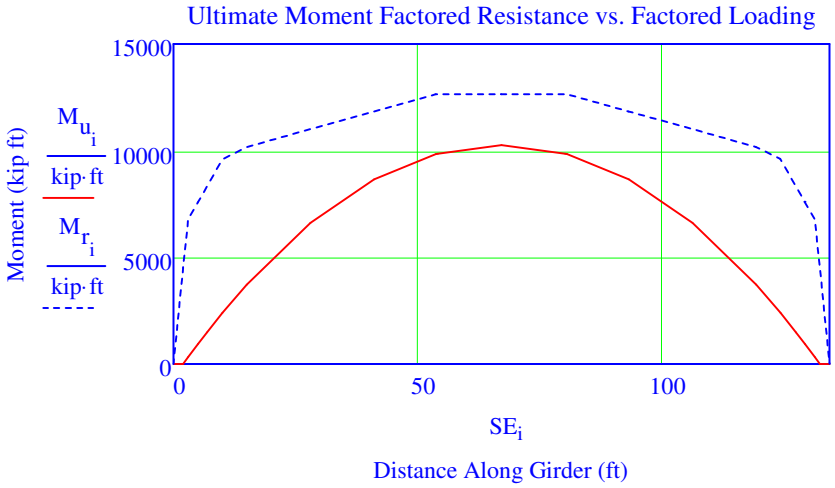

Check flexural strength at all sections

$$chk_{9,2} := \left| \begin{array}{l} CH \leftarrow \text{"OK"} \\ \text{for } i \in 1..\text{rows}(SE) \\ \quad CH \leftarrow \text{"NG"} \text{ if } M_{r_i} < M_{u_i} \\ CH \end{array} \right. \quad = \text{"OK"}$$

9.3 Minimum Reinforcement

BDM 5.1.2.H.1
LRFD 5.7.3.3.2
LRFD 5.4.2.6

Modulus of rupture

$$f_{r.Mcr.min} = 1.079 \cdot ksi$$

Compressive stress in concrete due to effective prestress forces only (after allowance for all prestress losses) at extreme fiber of section where tensile stress is caused by externally applied loads (bottom of girder)

$$f_{cpe_i} := |PS5_{i,2}|$$

Total unfactored dead load moment acting on the monolithic or noncomposite girder

$$M_{dnc_i} := \sum_{j=1}^{4} M_{i,j}$$

Section modulus for the extreme fiber of the composite section where tensile stress is caused by externally applied loads

$$S_c := S_b = 25069 \cdot in^3$$

Section modulus for the extreme fiber of the monolithic or noncomposite section where tensile stress is caused by externally applied loads

$$S_{nc} := S_{bg} = 20593 \cdot in^3$$

$$\gamma_1 := 1.56$$

$$\gamma_2 := 1.1$$

1.0 for prestressed concrete structures

$$\gamma_3 := 1.0$$

$$M_{cr.mod_i} := \gamma_3 \cdot \left[\left(\gamma_1 \cdot f_{r.Mcr.min} + \gamma_2 \cdot f_{cpe_i} \right) \cdot S_c - M_{dnc_i} \cdot \left(\frac{S_c}{S_{nc}} - 1 \right) \right]$$

$M_{dnc} =$

	1
1	0
2	0
3	129
4	375
5	594
6	958
7	1490
8	2661
9	3495
10	3981
11	3991
12	4169
13	3991

$\cdot kip \cdot ft$

$M_{cr.mod} =$

	1
1	3516
2	7320
3	9330
4	9392
5	9449
6	9552
7	9722
8	10213
9	10778
10	11395
11	11393
12	11354
13	11393

$\cdot kip \cdot ft$

$M_r =$

	1
1	0
2	4508
3	6788
4	7583
5	8324
6	9606
7	10171
8	11003
9	11837
10	12649
11	12649
12	12649
13	12649

$\cdot kip \cdot ft$

14	3981
15	3495
16	...

14	11395
15	10778
16	...

14	12649
15	11837
16	...

Check if minimum reinforcement is provided. This check need not be satisfied if section is compression controlled.

$$chk_{9,3} := \left| \begin{array}{l} CH \leftarrow \text{"OK"} \\ \text{for } i \in 1..\text{rows}(SE) \\ \quad CH \leftarrow \text{"NG"} \quad \text{if } M_{r_i} < \min\left(M_{cr.mod_i}, 1.33 \cdot M_{u_i}\right) \\ CH \end{array} \right. = \text{"OK"}$$

10. Shear & Longitudinal Reinforcement Design

Home

10.1 Factored Shear Loads

Factored shears for Strength 1 Limit State (ultimate):

$$V_u := \left| \begin{array}{l} \text{for } i \in 1..\text{rows}(SE) \\ \quad UV_i \leftarrow \left| \eta \cdot \left(\gamma_{DC} \cdot \sum_{j=1}^{5} V_{i,j} + \gamma_{DW} \cdot V_{i,6} + \gamma_{LL} \cdot DF_v \cdot V_{i,10} \right) \right| \\ UV \end{array} \right|$$

$V_u =$ (kip)

	1
1	0.00
2	357.81
3	353.11
4	343.95
5	335.59
6	321.18
7	298.69
8	240.65
9	180.14
10	125.97
11	124.30
12	69.55
13	124.29
14	125.97
15	180.13
16	...

10.2 Critical Section Location

The shear design of prestressed members shall be based on the general procedure of AASHTO LRFD 5.8.3.4.2. The minimum angle θ shall be 25 degrees. BDM 5.2.4.C

Compute effective shear depth

Effective depth from extreme compression fiber to the centroid of the tensile force (mild steel reinforcement is neglected) $d_{e_i} := d_{p_i}$ LRFD 5.8.2.9

Check if sectional shear model is appropriate. If not, use strut and tie. $chk_{10,1} := \text{if}\left(\frac{L}{2} \geq 2 \cdot d_{e_{rs_L}}, \text{"OK"}, \text{"NG"}\right) = \text{"OK"}$ LRFD 5.8.1.1

Distance between resultants of tensile and compressive flexure forces $d_{vI_i} := \frac{M_{n_i}}{A_{ps} \cdot f_{ps_i}}$ LRFD C5.8.2.9-1

Section total depth $h := d_g + t_s = 81.0 \cdot \text{in}$

Effective shear depth $d_{v_i} := \max\left(d_{vI_i}, 0.9 \cdot d_{e_i}, 0.72 \cdot h\right)$ LRFD 5.8.2.9

	1
1	58.579
2	59.288
3	59.658

	1
1	0.00
2	57.52
3	56.96

	1
1	58.32
2	58.32
3	58.32

$d_e =$

3	59.658
4	60.377
5	61.036
6	62.174
7	63.962
8	68.636
9	73.310
10	77.842
11	77.842
12	77.842
13	77.842
14	77.842
15	73.310
16	...

$\cdot in$

$d_{vI} =$

3	56.96
4	57.39
5	57.78
6	58.28
7	59.73
8	64.36
9	68.99
10	73.48
11	73.48
12	73.48
13	73.48
14	73.48
15	68.99
16	...

$\cdot in$

$d_v =$

3	58.32
4	58.32
5	58.32
6	58.32
7	59.73
8	64.36
9	68.99
10	73.48
11	73.48
12	73.48
13	73.48
14	73.48
15	68.99
16	...

$\cdot in$

Critical section for shear

Distance to critical section from support when reaction force introduces compression into the end region (use centerline of support instead of face to be conservative)

$d_c := d_{vrs_L} = 4.8600\,ft$ LRFD 5.8.3.2

Modify d_{est} above to recompute section forces and stresses at the correct critical section for shear, if necessary.

$chk_{10,2} := if(d_{est} = d_c, "OK", "NG") = "OK"$

10.3 Shear Design

LRFD 5.8.3.4.2

Calculate longitudinal strain

Angle of harped strands inclination

$\theta_{harp} := atan(slope_h) = 5.420 \cdot deg$

Effective PS Force in harped strands

$P_{h_i} := f_{pe} \cdot TRAN_i \cdot A_p \cdot N_h$

Vert component of Eff PS Force in harp strnds

$$V_{p_i} := \begin{cases} 0kip & \text{if } 0.4 \cdot GL \le SE_i \le 0.6 \cdot GL \\ P_{h_i} \cdot \sin(\theta_{harp}) & \text{otherwise} \end{cases}$$

For usual levels of prestressing

$f_{po} := 0.7 \cdot f_{pu} = 189.0 \cdot ksi$

Factored axial force (positive for tension)

$N_u := 0.0 \cdot kip$

	1
1	0.0
2	297.0
3	451.6
4	451.6
5	451.6
6	451.6

	1
1	0.0
2	28.1
3	42.7
4	42.7
5	42.7
6	42.7

$P_h =$

6	451.6
7	451.6
8	451.6
9	451.6
10	451.6
11	451.6
12	451.6
13	451.6
14	451.6
15	451.6
16	...

$\cdot kip$

$V_p =$

6	42.7
7	42.7
8	42.7
9	42.7
10	0.0
11	0.0
12	0.0
13	0.0
14	0.0
15	42.7
16	...

$\cdot kip$

Area of prestressing steel on the flexural tension side of the member

$$A_{psv_i} := \text{if}\left(t_s + Y_{tg} + EC_{i,1} \geq \frac{h}{2}, N_p \cdot A_p, N_s \cdot A_p\right)$$

Reduction factor for A_{psv} if strand is not fully developed at section under consideration

$$RF_i := \frac{f_{ps_i}}{f_{psI_i}}$$

Area of non-prestressed reinforcing steel on the flexural tension side

$$A_s := 0.0 \cdot in^2$$

Factored Moment - longitudinal strain calculation

$$M_{uv_i} := \max\left(\left|M_{u_i}\right|, \left|V_{u_i} - V_{p_i}\right| \cdot d_{v_i}\right)$$

Calculated Longitudinal strain

$$\varepsilon_{s_i} := \min\left(\max\left(\frac{\frac{\left|M_{uv_i}\right|}{d_{v_i}} + 0.5 \cdot N_u + \left|V_{u_i} - V_{p_i}\right| - A_{psv_i} \cdot RF_i \cdot f_{po} \cdot TRAN_i}{E_s \cdot A_s + E_p \cdot A_{psv_i} \cdot RF_i}, 0\right), .006\right)$$

For sections closer than d_v to the face of the support, the strain at d_v may be used

$$\varepsilon_{sv_i} := \begin{cases} \varepsilon_{s_{rc}} & \text{if } SE_i \leq SE_{rc} \\ \varepsilon_{s_{rows(SE)-rc+1}} & \text{if } SE_i \geq SE_{rows(SE)-rc+1} \\ \varepsilon_{s_i} & \text{otherwise} \end{cases}$$

$A_{psv} =$

	1
1	5.642
2	5.642
3	5.642
4	5.642
5	5.642
6	5.642
7	5.642
8	8.246
9	8.246

$\cdot in^2$

$RF =$

	1
1	0.00
2	0.46
3	0.70
4	0.78
5	0.85
6	0.97
7	1.00
8	1.00
9	1.00

$M_{uv} =$

	1
1	0
2	1603
3	1509
4	1464
5	1489
6	2397
7	3723
8	6613
9	8649

$\cdot kip \cdot ft$

$\varepsilon_s =$

	1
1	0.000000
2	0.000000
3	0.000000
4	0.000000
5	0.000000
6	0.000000
7	0.000000
8	0.000000
9	0.000355

9	8.246
10	8.246
11	8.246
12	8.246
13	8.246
14	8.246
15	8.246
16	...

9	1.00
10	1.00
11	1.00
12	1.00
13	1.00
14	1.00
15	1.00
16	...

9	8649
10	9834
11	9859
12	10253
13	9859
14	9834
15	8649
16	...

9	0.000355
10	0.000739
11	0.000749
12	0.000790
13	0.000749
14	0.000739
15	0.000355
16	...

Theta and beta factors for shear

LRFD 5.8.3.4.2

Angle of inclination of diagonal compressive stresses $\theta_i := \left(29 + 3500 \cdot \varepsilon_{s_i}\right) \cdot \text{deg}$ LRFD 5.8.3.4.2

Factor indicating ability of diagonally cracked concrete to transmit tension for sections containing at least the minimum amount of transverse reinforcement $\beta_i := \frac{4.8}{1 + 750 \cdot \varepsilon_{s_i}}$

$\theta =$

	1
1	29.00
2	29.00
3	29.00
4	29.00
5	29.00
6	29.00
7	29.00
8	29.00
9	30.24
10	31.59
11	31.62
12	31.76
13	31.62
14	31.59
15	30.24
16	...

$\cdot \text{deg}$

$\beta =$

	1
1	4.80
2	4.80
3	4.80
4	4.80
5	4.80
6	4.80
7	4.80
8	4.80
9	3.79
10	3.09
11	3.07
12	3.01
13	3.07
14	3.09
15	3.79
16	...

Nominal Shear Resistance

LRFD 5.8.3.3

Effective girder web width $b_v := b_w = 6.125 \cdot \text{in}$

Area of shear reinforcement within a distance "s" $A_v := 2 \cdot \text{area}\left(\text{bar}_v\right) = 0.618 \cdot \text{in}^2$

Stirrup spacing at each section. If section is in the first or last stirrup zones (the clearance to the first set of stirrups from the ends of the girder) then use the spacing for the adjacent zone.

	1
1	2.5
2	6.0
3	6.0
4	6.0
5	6.0
6	12.0

$$s_i := \begin{cases} \text{return } VR_{2,2} \text{ if } SE_i \le VR_{1,1} \\ \text{return } VR_{rows(VR)-1,2} \text{ if } SE_i \ge GL - VR_{rows(VR),1} \\ \text{for } k \in 1..rows(VR) \\ \quad \text{return } VR_{k,2} \text{ if } SE_i \le \sum_{j=1}^{k} VR_{j,1} \end{cases}$$

$s =$ ·in

7	12.0
8	18.0
9	18.0
10	18.0
11	18.0
12	18.0
13	18.0
14	18.0
15	18.0
16	...

Nominal shear resistance provided by tensile stress in concrete

$$V_{c_i} := 0.0316 \cdot \beta_i \cdot \sqrt{\frac{f'_c}{ksi}} \cdot ksi \cdot b_v \cdot d_{v_i}$$

Nominal shear resistance provided by transverse reinforcement (LRFD 5.8.3.3)

$$V_{s_i} := \frac{A_v \cdot f_y \cdot d_{v_i} \cdot \cot(\theta_i)}{s_i}$$

Design shear resistance

$$V_{n_i} := \min\begin{pmatrix} V_{c_i} + V_{s_i} + V_{p_i} \\ 0.25 \cdot f'_c \cdot b_v \cdot d_{v_i} + V_{p_i} \end{pmatrix}$$

$V_c =$ ·kip

	1
1	158.0
2	158.0
3	158.0
4	158.0
5	158.0
6	158.0
7	161.8
8	174.3
9	147.6
10	128.1
11	127.4
12	125.0
13	127.4
14	128.1
15	147.6
16	...

$V_s =$ ·kip

	1
1	1560.5
2	650.2
3	650.2
4	650.2
5	650.2
6	325.1
7	333.0
8	239.2
9	243.8
10	246.2
11	245.8
12	244.5
13	245.8
14	246.2
15	243.8
16	...

$V_n =$ ·kip

	1
1	759.1
2	787.1
3	801.7
4	801.7
5	801.7
6	525.7
7	537.4
8	456.1
9	434.0
10	374.3
11	373.3
12	369.5
13	373.3
14	374.3
15	434.0
16	...

$\phi_v \cdot V_n =$ ·kip

	1
1	683.2
2	708.4
3	721.6
4	721.6
5	721.6
6	473.2
7	483.7
8	410.5
9	390.6
10	336.8
11	336.0
12	332.5
13	336.0
14	336.8
15	390.6
16	...

Check adequacy in shear

$chk_{10,3} :=$ | CH ← "OK" = "OK"
for $i \in 1..rows(SE)$
CH ← "NG" if $\phi_v \cdot V_{n_i} < V_{u_i}$
CH

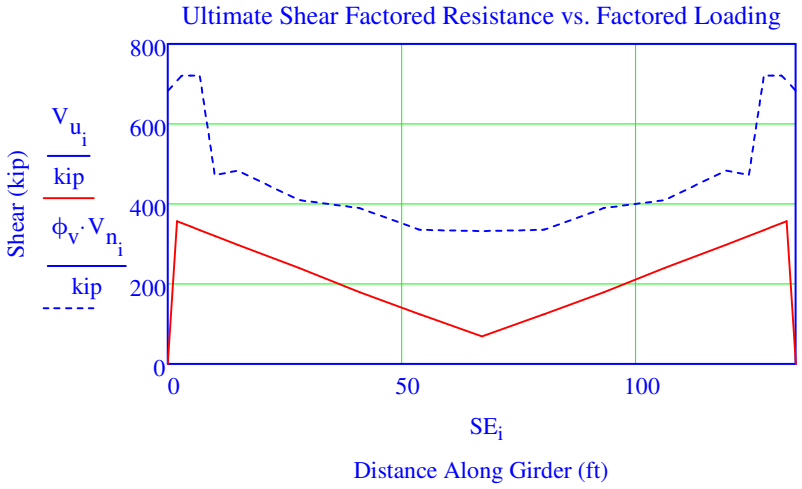

Minimum Transverse Reinforcement

Min shear reinforcement (LRFD 5.8.2.5)

$$A_{v.min_i} := 0.0316 \cdot \sqrt{\frac{f'_c}{ksi}} \cdot ksi \cdot \frac{b_v \cdot s_i}{f_y}$$

LRFD 5.8.2.5

Check minimum reinforcement limit

$chk_{10,4} :=$ | CH ← "OK" = "OK"
for $i \in 1..rows(SE)$
CH ← "NG" if $A_v < A_{v.min_i}$
CH

$A_{v.min} =$

	1
1	0.024
2	0.056
3	0.056
4	0.056
5	0.056
6	0.113
7	0.113
8	0.169
9	0.169
10	0.169
11	0.169
12	0.169
13	0.169
14	0.169
15	0.169
16	...

$\cdot in^2$

Maximum Spacing of Transverse Reinforcement

Shear stress on concrete

$$v_{u_i} := \frac{\left| V_{u_i} - \phi_v \cdot V_{p_i} \right|}{\phi_v \cdot b_v \cdot d_{v_i}}$$

LRFD 5.8.2.9

Max shear reinforcement spacing

BDM 5.2.2.B
LRFD 5.8.2.7

$$s_{max_i} := \begin{cases} \min\left(0.8\, d_{v_i}, 18\text{in}\right) & \text{if } v_{u_i} < 0.125 \cdot f'_c \\ \min\left(0.4\, d_{v_i}, 12\text{in}\right) & \text{otherwise} \end{cases}$$

Check maximum shear reinforcement spacing

$$chk_{10,5} := \begin{cases} CH \leftarrow \text{"OK"} \\ \text{for } i \in 1 .. \text{rows}(SE) \\ \quad CH \leftarrow \text{"NG"} \text{ if } s_{max_i} < s_i \\ CH \end{cases} = \text{"OK"}$$

$v_u =$

	1
1	0.000
2	1.034
3	0.979
4	0.950
5	0.924
6	0.880
7	0.791
8	0.570
9	0.373
10	0.311
11	0.307
12	0.172
13	0.307
14	0.311
15	0.373
16	...

·ksi

$s_{max} =$

	1
1	18.0
2	18.0
3	18.0
4	18.0
5	18.0
6	18.0
7	18.0
8	18.0
9	18.0
10	18.0
11	18.0
12	18.0
13	18.0
14	18.0
15	18.0
16	...

·in

10.4 Longitudinal Reinforcement

LRFD 5.8.3.5

Resistance Factor for axial load (compression) $\phi_{cN} := \phi_c = 0.75$

Required area of prestressing

$$A_{ps.req_i} := \begin{cases} a \leftarrow 0\text{in}^2 \text{ if } SE_i = 0\text{ft} \vee SE_i = GL \\ a \leftarrow \left[\frac{\left| M_{u_i} \right|}{d_{v_i} \cdot \phi_i} + 0.5 \cdot \frac{N_u}{\phi_{cN}} + \left(\left| \frac{V_{u_i}}{\phi_v} - V_{p_i} \right| - 0.5 \cdot \min\left(V_{s_i}, \frac{V_{u_i}}{\phi_v} \right) \right) \cdot \cot\left(\theta_i\right) \right] \cdot \frac{1}{f_{ps_i}} \text{ if } SE_{rc} \le SE_i \le GL - SE_{rc} \\ a \leftarrow \left[\left(\frac{V_{u_i}}{\phi_v} - 0.5 \cdot \min\left(V_{s_i}, \frac{V_{u_i}}{\phi_v} \right) - V_{p_i} \right) \cdot \cot\left(\theta_i\right) \right] \cdot \frac{1}{f_{ps_i}} \text{ otherwise} \\ a \end{cases}$$

Check if required area is provided

	1
1	0.000

$chk_{10,6} :=$ CH ← "OK"

for $i \in 1 .. rows(SE)$

CH ← "NG" if $A_{psv_i} < A_{ps.req_i}$

CH = "OK"

$A_{ps.req} =$

2	2.701
3	1.597
4	1.393
5	2.699
6	3.197
7	3.916
8	5.719
9	6.419
10	6.866
11	6.875
12	6.933
13	6.875
14	6.866
15	6.419
16	...

$\cdot in^2$

10.5 Horizontal Interface Shear between Girder and Slab

It is conservative to compute the interface shear force using the full factored loading applied to the composite deck slab and girder. Compute actual shear stress using mechanics of materials rather than use AASHTO LRFD 5.8.4.2. BDM 5.2.2.C

First Moment of Transformed Slab from Neutral Axis $Q_{slab} := A_{slab} \cdot \left(Y_t + \frac{t_s}{2} \right) = 10763.3 \cdot in^3$

Permanent Net Compressive Force Normal to the Shear Plane $P_c := w_{cs} \cdot t_s \cdot b_e = 0.588 \cdot \frac{kip}{ft}$

Area of stirrups crossing interface per foot $a_{vf_i} := \frac{A_v}{s_i}$

Shear Force at Girder/Slab Interface per foot $V_{ui_i} := \frac{V_{u_i} \cdot Q_{slab}}{I_c}$

Cohesion Factor $c_{vi} := 0.28ksi$ LRFD 5.8.4.3

Friction Factor $\mu := 1.0$ LRFD 5.8.4.3

Fraction of Concrete Strength Available $K_{1vi} := 0.3$ LRFD 5.8.4.3

Limiting Interface Shear Resistance $K_2 := 1.8ksi$ LRFD 5.8.4.3

Nominal Interface Shear Resistance

$$V_{ni_i} := \min\left[c_{vi} \cdot b_f + \mu \cdot \left(a_{vf_i} \cdot f_y + P_c \right), K_{1vi} \cdot f'_{cs} \cdot b_f, K_2 \cdot b_f \right]$$ LRFD 5.8.4.1

Factored Interface Shear Resistance $V_{ri_i} := \phi_v \cdot V_{ni_i}$ LRFD 5.8.4.1

Check adequacy in interface shear

$$chk_{10,7} := \left| \begin{array}{l} CH \leftarrow \text{"OK"} \quad = \text{"OK"} \\ \text{for } i \in 1..\text{rows}(SE) \\ \quad CH \leftarrow \text{"NG"} \quad \text{if } V_{ri_i} < V_{ui_i} \\ CH \end{array} \right.$$

Check stirrup spacing adequacy

$$chk_{10,8} := \left| \begin{array}{l} CH \leftarrow \text{"OK"} \quad = \text{"OK"} \\ \text{for } i \in 1..\text{rows}(SE) \\ \quad CH \leftarrow \text{"NG"} \quad \text{if } 24\text{in} < s_i \\ CH \end{array} \right.$$

LRFD 5.8.4.2

Minimum Area of Interface Shear Reinforcement

$$a_{vf.min_i} := \left| \begin{array}{l} \text{return } 0\frac{\text{in}^2}{\text{ft}} \quad \text{if } \frac{V_{ui_i}}{b_f} < 0.210\text{ksi} \\ \min\left[\frac{0.05 \cdot b_f}{\frac{f_y}{\text{ksi}}}, \max\left[\frac{1}{f_y} \cdot \left[\frac{1}{\mu} \cdot \left(\frac{1.33 \cdot V_{ui_i}}{\phi_v} - c_{vi} \cdot b_f\right) - P_c\right], 0\frac{\text{in}^2}{\text{ft}}\right]\right] \quad \text{otherwise} \end{array} \right.$$

LRFD 5.8.4.4

Check minimum area of interface shear reinforcement

$$chk_{10,9} := \left| \begin{array}{l} CH \leftarrow \text{"OK"} \quad = \text{"OK"} \\ \text{for } i \in 1..\text{rows}(SE) \\ \quad CH \leftarrow \text{"NG"} \quad \text{if } a_{vf_i} < a_{vf.min_i} \\ CH \end{array} \right.$$

LRFD 5.8.4.4

$V_{ui} =$

	1
1	0.000
2	38.962
3	38.450
4	37.453
5	36.542
6	34.973
7	32.524
8	26.205
9	19.615
10	13.717
11	13.535
12	7.573
13	13.534
14	13.717
15	19.614
16	

$\cdot \frac{\text{kip}}{\text{ft}}$ $V_{ri} =$

	1
1	308.891
2	215.449
3	215.449
4	215.449
5	215.449
6	182.077
7	182.077
8	170.953
9	170.953
10	170.953
11	170.953
12	170.953
13	170.953
14	170.953
15	170.953
16	

$\cdot \frac{\text{kip}}{\text{ft}}$ $a_{vf} =$

	1
1	2.97
2	1.24
3	1.24
4	1.24
5	1.24
6	0.62
7	0.62
8	0.41
9	0.41
10	0.41
11	0.41
12	0.41
13	0.41
14	0.41
15	0.41
16	

$\cdot \frac{\text{in}^2}{\text{ft}}$ $a_{vf.min} =$

	1
1	0.00
2	0.00
3	0.00
4	0.00
5	0.00
6	0.00
7	0.00
8	0.00
9	0.00
10	0.00
11	0.00
12	0.00
13	0.00
14	0.00
15	0.00
16	

$\cdot \frac{\text{in}^2}{\text{ft}}$

10.6 Pretensioned Anchorage Zone

Factored Splitting Resistance

BDM 5.6.2.F
LRFD 5.10.10.1

Distance from end contributing to splitting resistance $l_{split} := \frac{d_g}{4} = 18.50 \cdot in$

Total area of vertical reinforcement located within bursting length = h/4

$A_{s.burst} :=$ for $i \in 1 .. rows(VR)$ $= 4.326 \cdot in^2$

$x \leftarrow i \text{ if } l_{split} > \sum_{j=1}^{i} VR_{j,1}$

for $i \in 1 .. x + 1$

$AV \leftarrow AV + A_v \cdot ceil\left(\frac{VR_{i,1}}{VR_{i,2}}\right) \text{ if } i \le x$

$AV \leftarrow AV + A_v \cdot floor\left(\frac{l_{split} - \sum_{j=1}^{i-1} VR_{j,1}}{VR_{i,2}}\right) \text{ otherwise}$

AV

Maximum stress in steel $f_s := 20ksi$

Splitting Resistance $P_r := f_s \cdot A_{s.burst} = 86.52 \cdot kip$

Minimum required splitting resistance $P_{r.min} := 0.04 \cdot f_{pbt} \cdot A_{pstemp} = 76.58 \cdot kip$

Check if adequate splitting resistance is required. If not, required additional reinforcement can be provided at 2.5" spacing beyond the bursting length.

$chk_{10,10} := if\left(P_r \ge P_{r.min}, "OK" , "NG"\right) = "OK"$

Confinement Reinforcement

Confinement reinforcement shall be provided at the ends of beams to confine the prestressing steel in the bottom flange.

BDM 5.6.2.G
LRFD 5.10.10.2

Minimum length of PS confinement in bottom flange $l_{confine} := 1.5 \cdot d_g = 9.250 \cdot ft$

11. Deflection and Camber

Home

LRFD 5.7.3.6.2
BDM 5.2.4

Positive deflection is defined upward (in direction of camber).

11.1 Deflections Due to Prestress

The following function finds camber induced by straight strands, where:
P = Prestressing Force
e = Eccentricity of Prestressing Force from C.G. (positive upwards)
E = Modulus of Elasticity
I = Moment of Inertia
x = Distance from left support to compute deflection
L = Span Length between supports

$$\text{Straight}\Delta(P,e,E,I,x,L) := \begin{cases} 0 & \text{if } x < 0\text{in} \vee x > L \\ \dfrac{P\cdot e}{2\cdot E\cdot I}\cdot x\cdot(x-L) & \text{otherwise} \end{cases}$$

The following function finds camber induced by harped strands, where:
P = Prestressing Force
e_1 = Eccentricity of Straight Midspan Portion of Prestressing Force from C.G. (positive upwards).
e_2 = Eccentricity of Prestressing Force at support from C.G. (positive upwards)
E = Modulus of Elasticity
I = Moment of Inertia
x = Distance from left support to compute deflection
L = Span Length between supports
b = Distance between support and harp point (assumed symmetrical)

$$\text{Harp}\Delta(P,e_1,e_2,E,I,x,L,b) := \begin{cases} \text{return } 0 & \text{if } x < 0\text{in} \vee x > L \\ e \leftarrow -(e_2 - e_1) & \\ \text{return } \dfrac{P\cdot e\cdot x}{6\cdot E\cdot I\cdot b}\cdot\left(x^2 + 3\cdot b^2 - 3\cdot b\cdot L\right) + \dfrac{P\cdot e_2}{2\cdot E\cdot I}\cdot x\cdot(x-L) & \text{if } x \le b \\ \text{return } \dfrac{P\cdot e}{6\cdot E\cdot I}\cdot\left(3x^2 + b^2 - 3\cdot L\cdot x\right) + \dfrac{P\cdot e_2}{2\cdot E\cdot I}\cdot x\cdot(x-L) & \text{if } b < x < L-b \\ \text{return } \dfrac{P\cdot e\cdot(L-x)}{6\cdot E\cdot I\cdot b}\cdot\left[(L-x)^2 + 3\cdot b^2 - 3\cdot b\cdot L\right] + \dfrac{P\cdot e_2}{2\cdot E\cdot I}\cdot x\cdot(x-L) & \text{if } L-b \le x \end{cases}$$

Deflections due to straight strands $\Delta S_i := \text{Straight}\Delta\left(f_{peP1}\cdot N_s\cdot A_p, -e_s, E_{ci}, I_g, SE_i - P2, L\right)$

Deflections due to temporary strands $\Delta T_i := \text{Straight}\Delta\left(f_{peT1}\cdot N_t\cdot A_p, -e_{temp}, E_{ci}, I_g, SE_i - P2, L\right)$

Deflections due to release of temporary strands $\Delta TR_i := -\text{Straight}\Delta\left[\left(f_{peT1} + \Delta f_{pLTH}\right)\cdot N_t\cdot A_p, -e_{temp}, E_c, I_g, SE_i - P2, L\right]$

Deflections due to harp strands $\Delta H_i := \text{Harp}\Delta\left(f_{peP1}\cdot N_h\cdot A_p, -EC_{rm,1}, -EC_{rs_L,1}, E_{ci}, I_g, SE_i - P2, L, x_h - P2\right)$

$\Delta S =$

	1
1	0.000
2	0.000
3	0.082
4	0.238
5	0.376
6	0.606
7	0.941
8	1.672
9	2.195
10	2.502
11	2.508
12	2.613
13	2.508
14	2.502
15	2.195
16	...

$\cdot in$

$\Delta T =$

	1
1	0.000
2	0.000
3	-0.022
4	-0.063
5	-0.099
6	-0.160
7	-0.248
8	-0.441
9	-0.579
10	-0.660
11	-0.661
12	-0.689
13	-0.661
14	-0.660
15	-0.579
16	...

$\cdot in$

$\Delta TR =$

	1
1	0.000
2	0.000
3	0.020
4	0.057
5	0.091
6	0.146
7	0.227
8	0.403
9	0.529
10	0.603
11	0.604
12	0.629
13	0.604
14	0.603
15	0.529
16	...

$\cdot in$

$\Delta H =$

	1
1	0.000
2	0.000
3	0.010
4	0.031
5	0.051
6	0.089
7	0.155
8	0.346
9	0.529
10	0.659
11	0.662
12	0.708
13	0.662
14	0.659
15	0.529
16	...

$\cdot in$

11.2 Deflections due to Dead Loads

The following function returns the deflection of a simple span due to a concentrated load at any point:
P = Concentrated Load
a = Distance from left support that load is applied
x = Distance from left support to compute deflection
L = Length of simple span between supports
E = Modulus of Elasticity
I = Moment of Inertia

$$\Delta_{POINT}(P,a,x,L,E,I) := \begin{cases} \text{return } 0 \text{ if } x < 0in \vee x > L \\ \text{return } 0 \text{ if } a < 0in \vee a > L \\ \text{return } \frac{P\cdot(L-a)\cdot x}{6\cdot E\cdot I\cdot L}\cdot\left[L^2-(L-a)^2-x^2\right] \text{ if } x < a \\ \text{return } \frac{P\cdot a^2\cdot(L-a)^2}{3\cdot E\cdot I\cdot L} \text{ if } x = a \\ \text{return } \frac{P\cdot a\cdot(L-x)}{6\cdot E\cdot I\cdot L}\cdot\left[L^2-a^2-(L-x)^2\right] \text{ otherwise} \end{cases}$$

The following function returns the deflection of a simple span due to a uniform load:
w = Uniform Load
x = Distance from left support to compute deflection
L = Length of simple span between supports
E = Modulus of Elasticity
I = Moment of Inertia

$$\Delta_{UNIFORM}(w,x,L,E,I) := \begin{cases} 0 & \text{if } x < 0in \vee x > L \\ \frac{w \cdot x}{24 \cdot E \cdot I} \cdot \left(L^3 - 2 \cdot L \cdot x^2 + x^3\right) & \text{otherwise} \end{cases}$$

Deflection Due to girder dead load

$$\Delta G_i := -\Delta_{UNIFORM}\left(w_g, SE_i - P2, L, E_{ci}, I_g\right)$$

Deflection Due to pad and slab dead load

$$\Delta SL_i := -\Delta_{UNIFORM}\left(w_{pu} + w_s, SE_i - P2, L, E_c, I_g\right)$$

Deflection Due to barrier dead load

$$\Delta BAR_i := -\Delta_{UNIFORM}\left(w_b, SE_i - P2, L, E_c, I_c\right)$$

Due to intermediate diaphragms

$$\Delta DIA := \begin{cases} \text{for } i \in rs_L .. rs_R \\ \quad a \leftarrow 0ft \\ \quad \Delta_i \leftarrow 0in \\ \quad \text{for } j \in 1 .. n_{dia} \\ \quad\quad a \leftarrow a + DiaSpacing \\ \quad\quad \Delta_i \leftarrow \Delta_i - \Delta_{POINT}\left(DiaWt, a, SE_i - P2, L, E_c, I_g\right) \\ \Delta_{rows(SE)} \leftarrow 0in \\ \Delta \end{cases}$$

$\Delta G =$

	1
1	0.000
2	0.000
3	-0.042
4	-0.125
5	-0.200
6	-0.329
7	-0.527
8	-0.997
9	-1.365
10	-1.594
11	-1.599
12	-1.679
13	-1.599
14	-1.594
15	-1.365
16	...

$\cdot in \quad \Delta SL =$

	1
1	0.000
2	0.000
3	-0.031
4	-0.092
5	-0.147
6	-0.242
7	-0.387
8	-0.733
9	-1.003
10	-1.171
11	-1.175
12	-1.233
13	-1.175
14	-1.171
15	-1.003
16	...

$\cdot in \quad \Delta BAR =$

	1
1	0.000
2	0.000
3	-0.004
4	-0.011
5	-0.017
6	-0.028
7	-0.044
8	-0.084
9	-0.115
10	-0.134
11	-0.135
12	-0.141
13	-0.135
14	-0.134
15	-0.115
16	...

$\cdot in \quad \Delta DIA =$

	1
1	0.000
2	0.000
3	-0.003
4	-0.009
5	-0.015
6	-0.024
7	-0.039
8	-0.074
9	-0.101
10	-0.118
11	-0.118
12	-0.125
13	-0.118
14	-0.118
15	-0.101
16	...

$\cdot in$

11.3 Deflections Due to Creep

LRFD 5.4.2.3.2

The following functions determine the creep coefficient where
t = Maturity of Concrete (days), age of concrete between time of loading and time for analysis of creep effect
t_i = Age of concrete (days) at time of load application

f = Specified compressive strength of concrete at time of prestressing

Volume/Surface Area Factor $k_s := \max\left(1.45 - 0.13\cdot\frac{VS_r}{in}, 1.0\right) = 1.035$

Humidity Factor $k_{hc} := 1.56 - 0.008\cdot\left(\frac{H}{\%}\right) = 0.960$

Concrete Strength Factor $k_f(f) := \frac{5}{1 + \frac{f}{ksi}}$

Time Development Factor $k_{td}(t,f) := \frac{\frac{t}{day}}{61 - 4\cdot\left(\frac{f}{ksi}\right) + \frac{t}{day}}$

Creep Coefficient $\psi_{cr}(t, t_i, f) := 1.9\cdot k_s\cdot k_{hc}\cdot k_f(f)\cdot k_{td}(t,f)\cdot\left(\frac{t_i}{day}\right)^{-0.118}$

Time Intervals for Construction and Creep Coefficients

BDM 5.2.4

Note: 1 day of accelerated curing is treated as 7 days for concrete creep

BDM 5.1.1.E

	Time Intervals (days)		
Construction Timing	1	2	3
Minimum timing D_{40}	7	10	40
Maximum timing D_{120}	7	90	120

1 - Casting Girder to Releasing Strands
2 - Releasing Strands to Cutting Temporary Strands and Casting Diaphrams
3 - Releasing Strands to Placing Deck

Creep Coefficients for Minimum timing

$\psi_{10.7} := \psi_{cr}(10day, 7day, f'_{ci}) = 0.215$

$\psi_{40.7} := \psi_{cr}(40day, 7day, f'_{ci}) = 0.497$

$\psi_{30.10} := \psi_{cr}(30day, 10day, f'_{c}) = 0.399$

Creep Coefficients for Maximum timing

$\psi_{90.7} := \psi_{cr}(90day, 7day, f'_{ci}) = 0.657$

$\psi_{120.7} := \psi_{cr}(120day, 7day, f'_{ci}) = 0.702$

$\psi_{30.90} := \psi_{cr}(30day, 90day, f'_{c}) = 0.308$

Deflections due to creep between girder fabrication and temp strand removal / diaphragm placement for Minimum Timing

$\Delta CR1_{min_i} := \psi_{10.7}\cdot(\Delta S_i + \Delta H_i + \Delta T_i + \Delta G_i)$

Deflections due to creep between girder fabrication and temp strand removal / diaphragm placement for Maximum Timing

$\Delta CR1_{max_i} := \psi_{90.7}\cdot(\Delta S_i + \Delta H_i + \Delta T_i + \Delta G_i)$

Deflections due to creep between temp strand removal / diaphragm placement and deck placement fo

Minimum Timing

$$\Delta CR2_{min_i} := (\psi_{40.7} - \psi_{10.7}) \cdot (\Delta S_i + \Delta H_i + \Delta T_i + \Delta G_i) + \psi_{30.10} \cdot (\Delta DIA_i + \Delta TR_i)$$

Deflections due to creep between temp strand removal / diaphragm placement and deck placement for Maximum Timing

$$\Delta CR2_{max_i} := (\psi_{120.7} - \psi_{90.7}) \cdot (\Delta S_i + \Delta H_i + \Delta T_i + \Delta G_i) + \psi_{30.90} \cdot (\Delta DIA_i + \Delta TR_i)$$

$\Delta CR1_{min} =$

	1
1	0.00
2	0.00
3	0.01
4	0.02
5	0.03
6	0.04
7	0.07
8	0.12
9	0.17
10	0.20
11	0.20
12	0.21
13	0.20
14	0.20
15	0.17
16	...

·in $\Delta CR1_{max} =$

	1
1	0.00
2	0.00
3	0.02
4	0.05
5	0.08
6	0.13
7	0.21
8	0.38
9	0.51
10	0.60
11	0.60
12	0.63
13	0.60
14	0.60
15	0.51
16	...

·in $\Delta CR2_{min} =$

	1
1	0.00
2	0.00
3	0.01
4	0.04
5	0.07
6	0.11
7	0.17
8	0.29
9	0.39
10	0.45
11	0.45
12	0.47
13	0.45
14	0.45
15	0.39
16	...

·in $\Delta CR2_{max} =$

	1
1	0.00
2	0.00
3	0.01
4	0.02
5	0.03
6	0.05
7	0.07
8	0.13
9	0.17
10	0.19
11	0.19
12	0.20
13	0.19
14	0.19
15	0.17
16	...

·in

11.4 "D" and "C" Dimensions

"D" dimension at 40 days

$$D40_i := \Delta S_i + \Delta T_i + \Delta H_i + \Delta G_i + \Delta CR1_{min_i} + \Delta TR_i + \Delta DIA_i + \Delta CR2_{min_i}$$

"D" dimension at 120 days

$$D120_i := \Delta S_i + \Delta T_i + \Delta H_i + \Delta G_i + \Delta CR1_{max_i} + \Delta TR_i + \Delta DIA_i + \Delta CR2_{max_i}$$

Screed setting dimension "C" = - elastic deflection due to slab, traffic barrier, and overlay on noncomposite

$$C_i := -(\Delta SL_i + \Delta BAR_i)$$

Excess girder camber at 120 days to find "A" dim. $\Delta EXCESS_{120_i} := D120_i - C_i$

	1
1	0.000
2	0.000
3	0.065
4	0.188

	1
1	0.000
2	0.000
3	0.069
4	0.200

	1
1	0.000
2	0.000
3	0.035
4	0.102

	1
1	0.000
2	0.000
3	0.034
4	0.098

$D40 =$

5	0.297
6	0.478
7	0.743
8	1.329
9	1.766
10	2.036
11	2.042
12	2.134
13	2.042
14	2.036
15	1.766
16	...

$\cdot in$ $D120 =$

5	0.316
6	0.509
7	0.791
8	1.417
9	1.887
10	2.178
11	2.184
12	2.282
13	2.184
14	2.178
15	1.887
16	...

$\cdot in$ $C =$

5	0.164
6	0.270
7	0.432
8	0.817
9	1.118
10	1.305
11	1.309
12	1.375
13	1.309
14	1.305
15	1.118
16	...

$\cdot in$ $\Delta EXCESS_{120} =$

5	0.152
6	0.239
7	0.359
8	0.601
9	0.769
10	0.872
11	0.874
12	0.908
13	0.874
14	0.872
15	0.769
16	...

$\cdot ir$

Lower Bound D at 40 Days $0.5 \cdot D40_{rm} = 1.067 \cdot in$ BDM 5.2.4.C

Upper Bound D at 120 Days $D120_{rm} = 2.282 \cdot in$ BDM 5.2.4.C

Screed Camber "C" $C_{rm} = 1.375 \cdot in$ BDM 5.2.4.C

Check that Final Excess Camber is less than that assumed to estimate the A dimension. A dimension estimate should be revised if necessary.

$chk_{11,1} := if\left(\Delta EXCESS_{120_{rm}} \le A_{Ex}, "OK", "NG"\right) = "OK"$

11.5 Deflections Due to Live Load

LRFD 2.5.2.6

Live Load Deflection Criteria is based upon the following:

1. The vehicular load shall include the dynamic load allowance of LRFD 3.6.2.1 LRFD 2.5.2.6.2
2. The live load deflection should be taken as the larger of (LRFD 3.6.1.3.2):
   - That resulting from the design truck alone, or
   - that resulting from 25% of the design truck taken together with the design lane load
3. The provision of LRFD 3.6.1.1.2 (multiple presence of live load) shall be applied.
4. For straight girder systems, all design lanes should be loaded and all supporting elements should be assumed to deflect equally.
5. For composite design, the stiffness of the design cross-section should include the entire width of the roadway and the structurally continuous portions of the barriers. For simplicity and to be conservative, neglect the barriers.

Live load deflection limit (Vehicular Bridge) $\Delta_{LL.lim} := \frac{L}{800} = 1.950 \cdot in$ LRFD 2.5.2.6.2

Composite Section Properties for Entire Superstructure

Slab transformed flange width $b_{slab.trans} := (BW + 2 \cdot cw) \cdot n = 311.51 \cdot in$

Slab moment of inertia (transformed) $I_{slab2} := b_{slab.trans} \cdot t_s^{3} \div 12 = 8904.1 \cdot in^4$

Area of slab (transformed) $A_{slab2} := b_{slab.trans} \cdot t_s = 2180.6 \cdot in^2$

c.g. of slab to bottom of girder $Y_{bs} = 77.500 \cdot in$

c.g. to bottom of girder $Y_{b2} := \frac{A_{slab2} \cdot Y_{bs} + N_b \cdot A_g \cdot Y_{bg}}{A_{slab2} + N_b \cdot A_g} = 47.48 \cdot in$

c.g. to top of girder $Y_{t2} := d_g - Y_{b2} = 26.52 \cdot in$

c.g. to top of slab $Y_{ts2} := t_s + Y_{t2} = 33.52 \cdot in$

Slab moment of inertia about composite N.A. $I_{slabc2} := A_{slab2} \cdot (Y_{ts2} - 0.5t_s)^2 + I_{slab2} = 1974622 \cdot in^4$

Girder moment of inertia about composite N.A. $I_{gc2} := N_b \cdot A_g \cdot (Y_{b2} - Y_{bg})^2 + N_b \cdot I_g = 5179723 \cdot in^4$

Composite section moment of inertia $I_{c2} := I_{slabc2} + I_{gc2} = 7154345 \cdot in^4$

Maximum Live Load Deflection due to Design Truck

The following function finds the maximum deflection due to an AASHTO HL93 Truck Load at a section a distance "x" along a simple span of length "L". A truck moving both directions is checked. LRFD 3.6.1.2.2

$HL93Truck\Delta(x, L) :=$

Axles $\leftarrow \begin{pmatrix} 8kip \\ 32kip \\ 32kip \end{pmatrix}$

Locations $\leftarrow \begin{pmatrix} 0ft \\ -14ft \\ -28ft \end{pmatrix}$

rows $\leftarrow$ rows(Locations)

Loc $\leftarrow$ Locations

Deflection $\leftarrow 0in$

while $Loc_{rows} \le L$

  for $i \in 1..rows$

    $\Delta_i \leftarrow \Delta_{POINT}(Axles_i, Loc_i, x, L, E_c, I_{c2})$

    $Loc_i \leftarrow Loc_i + 0.01ft$

  Deflection $\leftarrow \max\left(\sum \Delta, Deflection\right)$

Loc $\leftarrow$ Locations

x $\leftarrow L - x$

while $Loc_{rows} \le L$

  for $i \in 1..rows$

    $\Delta_i \leftarrow \Delta_{POINT}(Axles_i, Loc_i, x, L, E_c, I_{c2})$

    $Loc_i \leftarrow Loc_i + 0.01ft$

  Deflection $\leftarrow \max\left(\sum \Delta, Deflection\right)$

Deflection

Deflections due to one truck loading on entire superstructure

$$\Delta TRUCK_i := HL93Truck\Delta(SE_i - P2, L)$$

Deflections due to one lane loading on entire superstructure

$$\Delta LANE_i := \Delta_{UNIFORM}(w_{lane}, SE_i - P2, L, E_c, I_{c2})$$

Maximum Superstructure Deflections LRFD 3.6.1.3.2

$$\Delta SUPER_i := N_L \cdot m_p \cdot \max\left[\Delta TRUCK_i \cdot (1 + IM), 0.25 \cdot \Delta TRUCK_i \cdot (1 + IM) + \Delta LANE_i\right]$$

$\Delta TRUCK =$

	1
1	0.000
2	0.000
3	0.003
4	0.009
5	0.015
6	0.025
7	0.040
8	0.077
9	0.106
10	0.125
11	0.125
12	0.132
13	0.125
14	0.125
15	0.106
16	...

$\cdot in$

$\Delta LANE =$

	1
1	0.000
2	0.000
3	0.002
4	0.007
5	0.012
6	0.019
7	0.031
8	0.058
9	0.080
10	0.093
11	0.093
12	0.098
13	0.093
14	0.093
15	0.080
16	...

$\cdot in$

$\Delta SUPER =$

	1
1	0.000
2	0.000
3	0.011
4	0.032
5	0.052
6	0.085
7	0.136
8	0.260
9	0.360
10	0.423
11	0.424
12	0.447
13	0.424
14	0.423
15	0.360
16	...

$\cdot in$

Check LL Deflection Limit

$$chk_{1,2} := if\left(\max(\Delta SUPER) < \Delta_{LL.lim}, "OK", "NG"\right) = "OK"$$

12. Lifting, Shipping, and General Stability

Home

12.1 Lifting Stresses

Dead load bending moment and stress

Impact is not applied during the lifting stage

BDM 5.6.2 C.2.

Dead load moments during lifting $M_{Lift_i} := M_{cant}\left(w_g, L_1, L_1, GL - 2L_1, SE_i\right)$

Dead load stresses at top of girder during lifting $ST_{Lift_i} := -\frac{M_{Lift_i}}{S_{tg}}$

Dead load stresses at bottom of girder during lifting $SB_{Lift_i} := \frac{M_{Lift_i}}{S_{bg}}$

$M_{Lift} =$

	1
1	0.0
2	-2.1
3	-4.8
4	-13.2
5	105.2
6	301.4
7	588.2
8	1214.1
9	1661.2
10	1923.9
11	1929.4
12	2018.8
13	1929.4
14	1923.9
15	1661.2
16	...

·kip·ft

$ST_{Lift} =$

	1
1	0.000
2	0.001
3	0.003
4	0.008
5	-0.066
6	-0.189
7	-0.368
8	-0.761
9	-1.041
10	-1.205
11	-1.209
12	-1.265
13	-1.209
14	-1.205
15	-1.041
16	...

·ksi

$SB_{Lift} =$

	1
1	0.000
2	-0.001
3	-0.003
4	-0.008
5	0.061
6	0.176
7	0.343
8	0.707
9	0.968
10	1.121
11	1.124
12	1.176
13	1.124
14	1.121
15	0.968
16	...

·ksi

Service I for Casting Yard Stage (At Lifting)

Effective Prestress in Permanent Strands $f_{peP.Lift} := f_{pj} + \Delta f_{pR0} + \Delta f_{pES} = 187.5 \cdot ksi$

Effective Prestress in Temporary Strands $f_{peT.Lift} := f_{pj} + \Delta f_{pR0} + \Delta f_{pEST} = 193.8 \cdot ksi$

Stress in girder due to prestressing:

	Top Stress	Bottom Stress
	1	2

$PS_{Lift} :=$ for $i \in 1 .. rows(SE)$

$P_p \leftarrow f_{peP.Lift} \cdot TRAN_i \cdot A_{ps}$

$P_t \leftarrow f_{peT.Lift} \cdot TRAN_i \cdot A_{temp}$

$PS_{i,1} \leftarrow -\left(\frac{P_p}{A_g} - \frac{P_p \cdot EC_{i,2}}{S_{tg}} + \frac{P_t}{A_g} - \frac{P_t \cdot e_{temp}}{S_{tg}}\right)$

$PS_{i,2} \leftarrow -\left(\frac{P_p}{A_g} + \frac{P_p \cdot EC_{i,2}}{S_{bg}} + \frac{P_t}{A_g} + \frac{P_t \cdot e_{temp}}{S_{bg}}\right)$

PS

$PS_{Lift} =$ ·ksi

1	0.000	0.000
2	-0.855	-1.676
3	-1.270	-2.577
4	-1.212	-2.631
5	-1.159	-2.680
6	-1.067	-2.766
7	-0.923	-2.900
8	-0.546	-3.251
9	-0.169	-3.601
10	0.197	-3.942
11	0.197	-3.942
12	0.197	-3.942
13	0.197	-3.942
14	0.197	-3.942
15	-0.169	-3.601
16	-0.546	...

Find total Service I stress which includes:
- Prestress
- Girder Dead Load between lift points

$STRESS_{Lift} :=$ for $i \in 1 .. rows(SE)$

$STR_{i,1} \leftarrow PS_{Lift_{i,1}} + ST_{Lift_i}$

$STR_{i,2} \leftarrow PS_{Lift_{i,2}} + SB_{Lift_i}$

STR

$STRESS_{Lift} =$ ·ksi

	Top Stress 1	Bottom Stress 2
1	0.000	0.000
2	-0.854	-1.678
3	-1.267	-2.579
4	-1.204	-2.638
5	-1.225	-2.619
6	-1.256	-2.590
7	-1.291	-2.557
8	-1.306	-2.543
9	-1.209	-2.633
10	-1.008	-2.821
11	-1.012	-2.817
12	-1.068	-2.765
13	-1.012	-2.817
14	-1.008	-2.821
15	-1.209	-2.633
16	-1.306	...

Maximum compressive stress allowed: $f_{c.TL.lim} = -4.875 \cdot ksi$

Maximum tensile stress allowed: $f_{t.TL.lim} = 0.520 \cdot ksi$

Check compressive stress $chk_{12,1} := if\left(min\left(STRESS_{Lift}\right) \geq f_{c.TL.lim}, "OK", "NG"\right) = "OK"$

Check tensile stress (with bonded reinforcement) $chk_{12,2} := if\left(max\left(STRESS_{Lift}\right) \le f_{t.TL.lim}, "OK", "NG"\right) = "OK"$

12.2 Girder Stability During Lifting

References

1. PCI Journal Jan/Feb 1989 and Jan/Feb 1993, Lateral Stability of Long Prestressed Concrete Beams Parts 1 and 2, Robert F. Mast
2. PCI Journal Jul/Aug 1998, New Deep WSDOT Standard Sections Extend Spans of Prestressed Concrete Girder Bridges
3. PCI Journal Fall 2009, Design Optimization for Fabrication of Pretensioned Concrete Bridge Girders
4. BDM 5.6.3-C.2

Length of girder between lift points $L_{Lift} := GL - 2L_1 = 123.95\,ft$

Initial eccentricity caused by lift loop placement tolerance $e_{lift} := 0.25in$ — Std. Spec. 6-02.3(25)I, BDM 5.6.3.C.2

Initial eccentricity caused by sweep (horizontal) tolerance at midspan of girder $e_{sweep} := \frac{0.125in}{10ft \cdot 2} \cdot GL = 0.837 \cdot in$ — Std. Spec. 6-02.3(25)J, BDM 5.6.3.C.2

Offset Factor that determines the distance between the roll axis and the c.g. of the arc of a curved girder $F_{oL} := \left(\frac{L_{Lift}}{GL}\right)^2 - \frac{1}{3} = 0.523$

Initial eccentricity of the c.g. from the roll axis $e_i := e_{lift} + e_{sweep} \cdot F_{oL} = 0.688 \cdot in$

Downward deflection due to self weight (midspan). The first term is deflection caused by self weight between lifting supports. The second term is deflection caused by overhangs.

$$\Delta_{self} := -\Delta_{UNIFORM}\left(w_g, SE_{rm} - L_1, L_{Lift}, E_{ci}, I_g\right) + \frac{w_g \cdot {L_1}^2 \cdot {L_{Lift}}^2}{16 \cdot E_{ci} \cdot I_g} = -1.377 \cdot in$$

Deflection due to prestress (midspan)

$$\begin{aligned}\Delta_{ps} := {} & Straight\Delta\left(f_{peP1} \cdot N_s \cdot A_p, -e_s, E_{ci}, I_g, SE_{rm}, GL\right) \ldots \\ & + Straight\Delta\left(f_{peT1} \cdot N_t \cdot A_p, -e_{temp}, E_{ci}, I_g, SE_{rm}, GL\right) \ldots \\ & + Harp\Delta\left(f_{peP1} \cdot N_h \cdot A_p, -EC_{rm,1}, -EC_{1,1}, E_{ci}, I_g, SE_{rm}, GL, x_h\right)\end{aligned} = 2.769 \cdot in$$

Vertical distance from the roll center to the c.g. $y_r := Y_{tg} - \left(\Delta_{self} + \Delta_{ps}\right) \cdot F_{oL} = 37.612 \cdot in$

Initial roll angle of a rigid beam $\theta_i := \frac{e_i}{y_r} = 0.018 \cdot rad$

Theoretical deflection at the girder c.g. assuming full weight is applied about the weak axis $z_o := \frac{w_g}{12 \cdot E_{ci} \cdot I_y \cdot GL} \cdot \left(\frac{1}{10} \cdot {L_{Lift}}^5 - {L_1}^2 \cdot {L_{Lift}}^3 + 3 \cdot {L_1}^4 \cdot L_{Lift} + \frac{6}{5} \cdot {L_1}^5\right)$

$$z_o = 8.243 \cdot in$$

Lateral bending moment to cause cracking in corner of top or bottom flange from biaxial bending $M_{lat_i} := \min\left[\left(f_{rL} - STRESS_{Lift_{i,1}}\right) \cdot \frac{2I_y}{b_f}, \left(f_{rL} - STRESS_{Lift_{i,2}}\right) \cdot \frac{2I_y}{b_{f.bot}}\right]$

Tilt angle at cracking

$$\theta_{max_i} := \begin{cases} \text{return } \min\left(\left|\frac{M_{lat_{rl_1}}}{M_{Lift_{rl_1}}}\right|, \frac{\pi}{2}\right) & \text{if } SE_i \le SE_{rl_1} \\ \text{return } \min\left(\frac{M_{lat_i}}{M_{Lift_i}}, \frac{\pi}{2}\right) & \text{if } SE_{rl_1} < SE_i < SE_{rl_2} \\ \text{return } \min\left(\left|\frac{M_{lat_{rl_2}}}{M_{Lift_{rl_2}}}\right|, \frac{\pi}{2}\right) & \text{if } SE_i \ge SE_{rl_2} \end{cases}$$

Factor of Safety against cracking during lifting

$$FS_{cr.l_i} := \left(\frac{z_o}{y_r} + \frac{\theta_i}{\theta_{max_i}}\right)^{-1}$$

$M_{lat} =$

	1
1	161.0
2	370.1
3	471.5
4	455.9
5	461.1
6	468.7
7	477.4
8	481.0
9	457.2
10	407.9
11	408.8
12	422.5
13	408.8
14	407.9
15	457.2
16	...

·kip·ft

$\theta_{max} =$

	1
1	1.5708
2	1.5708
3	1.5708
4	1.5708
5	1.5708
6	1.5549
7	0.8116
8	0.3962
9	0.2752
10	0.2120
11	0.2119
12	0.2093
13	0.2119
14	0.2120
15	0.2752
16	...

·rad

$FS_{cr.l} =$

	1
1	4.333
2	4.333
3	4.333
4	4.333
5	4.333
6	4.331
7	4.138
8	3.769
9	3.502
10	3.274
11	3.274
12	3.262
13	3.274
14	3.274
15	3.502
16	...

Check if minimum FS against cracking is greater than 1.0

$$chk_{12,3} := \text{if}\left(\min\left(FS_{cr.l}\right) \ge 1.0, \text{"OK"}, \text{"NG"}\right) = \text{"OK"}$$

Tilt angle at which the maximum FS against failure occurs

$$\theta'_{max} := \sqrt{\frac{e_i}{2.5 \cdot z_o}} = 0.1827 \cdot \text{rad}$$

Effective theoretical deflection

$$z'_o := z_o \cdot \left(1 + 2.5 \cdot \theta'_{max}\right) = 12.008 \cdot \text{in}$$

Maximum Factor of Safety against failure

$$FS_f := \frac{y_r \cdot \theta'_{max}}{z'_o \cdot \theta'_{max} + e_i} = 2.385$$

If Maximum FS against failure is less than the minimum FS against cracking, then set it equal to

$$FS_f := \max\left(\min\left(FS_{cr.l}\right), FS_f\right) = 3.262$$

the minimum FS against cracking

Check lifting $chk_{12,4} := \text{if}\left(FS_f \geq 1.5, \text{"OK"}, \text{"NG"}\right) = \text{"OK"}$

12.3 Shipping Weight and Stresses

Girder weight limit for truck shipping

Total weight $W_g := w_g \cdot GL = 141.7 \cdot kip$

Check allowable shipping weight (BDM 5.6.3 D.3) $chk_{12,5} := \text{if}\left(W_g \leq 240kip, \text{"OK"}, \text{"NG"}\right) = \text{"OK"}$

Dead load bending moment and stress

Length of girder between shipping points $L_S := GL - L_L - L_T = 113.95\,ft$

Dead load moments during shipping $M_{Ship_i} := M_{cant}\left(w_g, L_L, L_T, L_S, SE_i\right)$

Dead load stresses at top of girder during shipping $ST_{Ship_i} := -\frac{M_{Ship_i}}{S_{tg}}$

Dead load stresses at bottom of girder during shipping $SB_{Ship_i} := \frac{M_{Ship_i}}{S_{bg}}$

$M_{Ship} =$

	1
1	0.0
2	-2.1
3	-4.8
4	-13.2
5	-24.7
6	-52.9
7	233.8
8	859.7
9	1306.8
10	1569.5
11	1575.1
12	1664.5
13	1575.1
14	1569.5
15	1306.8
16	...

$\cdot kip \cdot ft$

$ST_{Ship} =$

	1
1	0.000
2	0.001
3	0.003
4	0.008
5	0.015
6	0.033
7	-0.146
8	-0.539
9	-0.819
10	-0.983
11	-0.987
12	-1.043
13	-0.987
14	-0.983
15	-0.819
16	...

$\cdot ksi$

$SB_{Ship} =$

	1
1	0.000
2	-0.001
3	-0.003
4	-0.008
5	-0.014
6	-0.031
7	0.136
8	0.501
9	0.761
10	0.915
11	0.918
12	0.970
13	0.918
14	0.915
15	0.761
16	...

$\cdot ksi$

Prestressing Stresses

Effective Prestress in Permanent Strands $f_{peP.Ship} := f_{pj} + \Delta f_{pR0} + \Delta f_{pES} + \Delta f_{pLTH} = 182.2 \cdot ksi$

Effective Prestress in Temporary Strands $f_{peT.Ship} := f_{pj} + \Delta f_{pR0} + \Delta f_{pEST} + \Delta f_{pLTH} = 188.5 \cdot ksi$

Stress in girder due to prestressing:

$$PS_{Ship} := \left| \begin{array}{l} \text{for } i \in 1 .. \text{rows}(SE) \\ \quad P_p \leftarrow f_{peP.Ship} \cdot TRAN_i \cdot A_{ps} \\ \quad P_t \leftarrow f_{peT.Ship} \cdot TRAN_i \cdot A_{temp} \\ \quad PS_{i,1} \leftarrow -\left(\frac{P_p}{A_g} - \frac{P_p \cdot EC_{i,2}}{S_{tg}} + \frac{P_t}{A_g} - \frac{P_t \cdot e_{temp}}{S_{tg}} \right) \\ \quad PS_{i,2} \leftarrow -\left(\frac{P_p}{A_g} + \frac{P_p \cdot EC_{i,2}}{S_{bg}} + \frac{P_t}{A_g} + \frac{P_t \cdot e_{temp}}{S_{bg}} \right) \\ PS \end{array} \right.$$

$PS_{Ship} =$ ·ksi

	Top Stress 1	Bottom Stress 2
1	0.000	0.000
2	-0.831	-1.629
3	-1.235	-2.504
4	-1.179	-2.556
5	-1.127	-2.604
6	-1.038	-2.687
7	-0.898	-2.818
8	-0.531	-3.159
9	-0.164	-3.500
10	0.191	-3.830
11	0.191	-3.830
12	0.191	-3.830
13	0.191	-3.830
14	0.191	-3.830
15	-0.164	-3.500
16	-0.531	...

Service I for Shipping - Plumb Girder with Impact

Find total Service I stress which includes:

- Prestress
- Girder Dead Load between bunk points including impact up or down

Impact during the shipping stage which shall be applied either up or down $IM_{SH} := 20\%$ BDM 5.6.2 C.2.

$$STRESS_{Ship1} := \left| \begin{array}{l} \text{for } i \in 1..\text{rows}(SE) \\ \quad STR_{i,1} \leftarrow PS_{Ship_{i,1}} + ST_{Ship_i} \cdot (1 - IM_{SH}) \\ \quad STR_{i,2} \leftarrow PS_{Ship_{i,1}} + ST_{Ship_i} \\ \quad STR_{i,3} \leftarrow PS_{Ship_{i,1}} + ST_{Ship_i} \cdot (1 + IM_{SH}) \\ \quad STR_{i,4} \leftarrow PS_{Ship_{i,2}} + SB_{Ship_i} \cdot (1 - IM_{SH}) \\ \quad STR_{i,5} \leftarrow PS_{Ship_{i,2}} + SB_{Ship_i} \\ \quad STR_{i,6} \leftarrow PS_{Ship_{i,2}} + SB_{Ship_i} \cdot (1 + IM_{SH}) \\ STR \end{array} \right.$$

$STRESS_{Ship1} =$

	Top Stress - IM	Top Stress	Top Stress + IM	Bottom Stress - IM	Bottom Stress	Bottom Stress + IM
	1	2	3	4	5	6
1	0.000	0.000	0.000	0.000	0.000	0.000
2	-0.830	-0.830	-0.830	-1.630	-1.630	-1.630
3	-1.233	-1.232	-1.232	-2.506	-2.507	-2.507
4	-1.172	-1.171	-1.169	-2.563	-2.564	-2.566
5	-1.115	-1.112	-1.109	-2.616	-2.619	-2.622
6	-1.011	-1.005	-0.998	-2.712	-2.718	-2.724
7	-1.015	-1.044	-1.073	-2.709	-2.682	-2.654
8	-0.962	-1.070	-1.177	-2.758	-2.658	-2.558
9	-0.819	-0.983	-1.147	-2.891	-2.738	-2.586
10	-0.596	-0.792	-0.989	-3.099	-2.916	-2.733
11	-0.598	-0.796	-0.993	-3.096	-2.913	-2.729
12	-0.643	-0.852	-1.060	-3.055	-2.861	-2.667
13	-0.598	-0.796	-0.993	-3.096	-2.913	-2.729
14	-0.596	-0.792	-0.989	-3.099	-2.916	-2.733
15	-0.819	-0.983	-1.147	-2.891	-2.738	-2.586
16	-0.962	-1.070	-1.177	-2.758	-2.658	...

$\cdot ksi$

Maximum compressive stress allowed: $f_{c.SH.lim} = -5.525 \cdot ksi$

Maximum tensile stress allowed: $f_{t.SP.lim} = 0.554 \cdot ksi$

Check compressive stress $chk_{12,6} := \text{if}\left(\min\left(STRESS_{Ship1}\right) \geq f_{c.SH.lim}, \text{"OK"}, \text{"NG"}\right) = \text{"OK"}$

Check tensile stress (with bonded reinforcement) $chk_{12,7} := \text{if}\left(\max\left(STRESS_{Ship1}\right) \leq f_{t.SP.lim}, \text{"OK"}, \text{"NG"}\right) = \text{"OK"}$

Service I for Shipping - Girder on Superelevation without Impact

BDM 5.6.3 D.6

References

1. PCI Journal Jan/Feb 1989 and Jan/Feb 1993, Lateral Stability of Long Prestressed Concrete Beams Parts 1 and 2, Robert F. Mast
2. PCI Journal Jul/Aug 1998, New Deep WSDOT Standard Sections Extend Spans of Prestressed Concrete Girder Bridges
3. PCI Journal Fall 2009, Design Optimization for Fabrication of Pretensioned Concrete Bridge Girders
4. BDM 5.6.3-C.2

Maximum expected roadway superelevation

$se := 6\%$

Superelevation angle

$\alpha := \operatorname{atan}(se) = 0.0599 \cdot rad$

$\alpha = 3.434 \cdot deg$

Rotational Stiffness of Support

$K_\theta := \max\left(28000 \frac{kip \cdot in}{rad}, 4000 \frac{kip \cdot in}{rad} \cdot \operatorname{ceil}\left(\frac{W_g}{18kip}\right)\right) = 32000 \cdot \frac{kip \cdot in}{rad}$

Height at which beam weight W_g could be placed to cause neutral equilibrium

$r := \frac{K_\theta}{W_g} = 225.77 \cdot in$

Initial eccentricity caused by shipping support placement tolerance

$e_{ship} := 1in$

Std. Spec. 6-02.3(25)I
BDM 5.6.3.D.6

Initial eccentricity caused by sweep (horizontal) tolerance at midspan of girder

$e_{s.ship} := \frac{0.125in}{10ft} \cdot GL = 1.674 \cdot in$

Std. Spec. 6-02.3(25)J
BDM 5.6.3.D.6

Offset Factor that determines the distance between the roll axis and the c.g. of the arc of a curved girder

$F_{oLship} := \left(\frac{L_S}{GL}\right)^2 - \frac{1}{3} = 0.390$

Initial eccentricity of the c.g. from the roll axis

$e_{i.ship} := e_{ship} + e_{s.ship} \cdot F_{oLship} = 1.654 \cdot in$

Height of roll center over roadway

$h_r := 24in$

Horizontal distance from roll center to center of tire support

$z_{max} := \frac{72in}{2} = 36.0 \cdot in$

Distance from the roll center to the c.g. of girder along roll axis (add 2% for camber)

$y := \left(Y_{bg} + 72in - h_r\right) \cdot 1.02 = 85.333 \cdot in$

Theoretical deflection at the girder c.g. assuming full weight is applied about the weak axis. Equation for z_o derived for unequal overhangs.

$$z_{o.ship} := -\frac{w_g}{24 \cdot E_c \cdot I_y \cdot GL} \cdot \left(\frac{-6 \cdot L_L^5}{5} - 2 L_L^4 \cdot L_S + L_L^2 \cdot L_S^3 - 2 \cdot L_L^2 \cdot L_S \cdot L_T^2 + L_S^3 \cdot L_T^2 - \frac{L_S^5}{5} - 2 \cdot L_S \cdot L_T^4 - \frac{6 \cdot L_T^5}{5}\right)$$

$z_{o.ship} = 4.779 \cdot in$

Equilibrium Tilt Angle

$\theta_{eq} := \frac{\alpha \cdot r + e_{i.ship}}{r - y - z_{o.ship}} = 0.1119 \cdot rad$

Lateral bending moment during shipping for inclined girder on superelevation

$M_{latINCL_i} := M_{Ship_i} \cdot \theta_{eq}$

Find total Service I stress which includes:
- Prestress
- Girder Dead Load between bunk points in biaxial bending due to superelevation

$$STRESS_{Ship2} := \left| \begin{array}{l} \text{for } i \in 1..\text{rows}(SE) \\ \quad STR_{i,1} \leftarrow PS_{Ship_{i,1}} + ST_{Ship_i} - M_{latINCL_i} \cdot \frac{b_f}{2I_y} \\ \quad STR_{i,2} \leftarrow PS_{Ship_{i,1}} + ST_{Ship_i} + M_{latINCL_i} \cdot \frac{b_f}{2I_y} \\ \quad STR_{i,3} \leftarrow PS_{Ship_{i,2}} + SB_{Ship_i} - M_{latINCL_i} \cdot \frac{b_{f.bot}}{2I_y} \\ \quad STR_{i,4} \leftarrow PS_{Ship_{i,2}} + SB_{Ship_i} + M_{latINCL_i} \cdot \frac{b_{f.bot}}{2I_y} \\ STR \end{array} \right.$$

$M_{latINCL} =$

	1
1	0.0
2	-0.2
3	-0.5
4	-1.5
5	-2.8
6	-5.9
7	26.2
8	96.2
9	146.3
10	175.7
11	176.3
12	186.3
13	176.3
14	175.7
15	146.3
16	...

$\cdot kip \cdot ft$

$STRESS_{Ship2} =$

	Top Stress Uphill Corner	Top Stress Downhill Corner	Bottom Stress Uphill Corner	Bottom Stress Downhill Corner
	1	2	3	4
1	0.000	0.000	0.000	0.000
2	-0.829	-0.831	-1.629	-1.631
3	-1.230	-1.234	-2.505	-2.508
4	-1.165	-1.177	-2.559	-2.569
5	-1.100	-1.123	-2.610	-2.628
6	-0.981	-1.029	-2.699	-2.737
7	-1.151	-0.937	-2.765	-2.598
8	-1.462	-0.677	-2.966	-2.350
9	-1.580	-0.386	-3.206	-2.271
10	-1.509	-0.075	-3.478	-2.354
11	-1.515	-0.076	-3.476	-2.349
12	-1.612	-0.091	-3.456	-2.265
13	-1.515	-0.076	-3.476	-2.349
14	-1.509	-0.075	-3.478	-2.354
15	-1.580	-0.386	-3.206	-2.271
16	-1.462	-0.677	-2.966	...

$\cdot l$

Maximum compressive stress allowed: $f_{c.SH.lim} = -5.525 \cdot ksi$

Maximum tensile stress allowed: $f_{t.SI.lim} = 0.700 \cdot ksi$

Check compressive stress $chk_{12,8} := \text{if}\left(\min\left(STRESS_{Ship2}\right) \geq f_{c.SH.lim}, \text{"OK"}, \text{"NG"}\right) = \text{"OK"}$

Check tensile stress (with bonded reinforcement) $chk_{12,9} := \text{if}\left(\max\left(STRESS_{Ship2}\right) \leq f_{t.SI.lim}, \text{"OK"}, \text{"NG"}\right) = \text{"OK"}$

12.4 Girder Stability During Shipping

Lateral bending moment to cause cracking in corner of top or bottom flange from biaxial bending

$$M_{latSh_i} := \min\left[\left(f_r - STRESS_{Ship1_{i,2}}\right)\cdot\frac{2I_y}{b_f}, \left(f_r - STRESS_{Ship1_{i,5}}\right)\cdot\frac{2I_y}{b_{f.bot}}\right]$$

Tilt angle at cracking

$$\theta_{maxSh_i} := \begin{cases} \text{return } \min\left(\left|\frac{M_{latSh_{rb_L}}}{M_{Ship_{rb_L}}}\right|, \frac{\pi}{2}\right) & \text{if } SE_i \le SE_{rb_L} \\ \text{return } \min\left(\frac{M_{latSh_i}}{M_{Ship_i}}, \frac{\pi}{2}\right) & \text{if } SE_{rb_L} < SE_i < SE_{rb_R} \\ \text{return } \min\left(\left|\frac{M_{latSh_{rb_R}}}{M_{Ship_{rb_R}}}\right|, \frac{\pi}{2}\right) & \text{if } SE_i \ge SE_{rb_R} \end{cases}$$

Factor of Safety against cracking during lifting

$$FS_{cr.2_i} := \frac{r\cdot\left(\theta_{maxSh_i} - \alpha\right)}{z_{o.ship}\cdot\theta_{maxSh_i} + e_{i.ship} + y\cdot\theta_{maxSh_i}}$$

$M_{latSh} =$

	1
1	171.4
2	374.8
3	473.3
4	458.2
5	443.7
6	417.5
7	427.2
8	433.4
9	412.2
10	365.5
11	366.3
12	380.1
13	366.3
14	365.5
15	412.2
16	...

·kip·ft

$\theta_{maxSh} =$

	1
1	1.5708
2	1.5708
3	1.5708
4	1.5708
5	1.5708
6	1.5708
7	1.5708
8	0.5041
9	0.3155
10	0.2329
11	0.2326
12	0.2283
13	0.2326
14	0.2329
15	0.3155
16	...

·rad

$FS_{cr.2} =$

	1
1	2.382
2	2.382
3	2.382
4	2.382
5	2.382
6	2.382
7	2.382
8	2.130
9	1.918
10	1.725
11	1.724
12	1.710
13	1.724
14	1.725
15	1.918
16	...

Check if minimum FS against cracking is greater than 1.0

$$chk_{12,10} := \text{if}\left(\min\left(FS_{cr.2}\right) \ge 1.0, \text{"OK"}, \text{"NG"}\right) = \text{"OK"}$$

Tilt angle at which the maximum FS against rollover occurs

$$\theta'_{maxS} := \frac{z_{max} - h_r\cdot\alpha}{r} + \alpha = 0.2130\cdot\text{rad}$$

Effective theoretical deflection

$$z'_{oS} := z_{o.ship}\cdot\left(1 + 2.5\cdot\theta'_{maxS}\right) = 7.325\cdot\text{in}$$

Maximum Factor of Safety against rollover

$$FS_{fS} := \frac{r\cdot\left(\theta'_{maxS} - \alpha\right)}{z'_{oS}\cdot\theta'_{maxS} + e_{i.ship} + y\cdot\theta'_{maxS}} = 1.616$$

Check FS against rollover

$$chk_{12,11} := \text{if}\left(FS_{fS} \geq 1.5, \text{"OK"}, \text{"NG"}\right) = \text{"OK"}$$

13. Check Results

Home

Row # indicates Section of each check and Column # indicates the check number within that Section.

chk =

	1	2	3	4	5	6	7	8	9	10	11
1	0	0	0	0	0	0	0	0	0	0	0
2	0	0	0	0	0	0	0	0	0	0	0
3	"OK"	"OK"	"OK"	0	0	0	0	0	0	0	0
4	0	0	0	0	0	0	0	0	0	0	0
5	"OK"	"OK"	"OK"	"OK"	"OK"	"OK"	"OK"	"OK"	"OK"	"OK"	"OK"
6	0	0	0	0	0	0	0	0	0	0	0
7	"OK"	"OK"	"OK"	"OK"	"OK"	0	0	0	0	0	0
8	"OK"	"OK"	"OK"	"OK"	"OK"	"OK"	"OK"	"OK"	"OK"	"OK"	"OK"
9	"OK"	"OK"	"OK"	0	0	0	0	0	0	0	0
10	"OK"	"OK"	"OK"	"OK"	"OK"	"OK"	"OK"	"OK"	"OK"	"OK"	0
11	"OK"	"OK"	0	0	0	0	0	0	0	0	0
12	"OK"	"OK"	"OK"	"OK"	"OK"	"OK"	"OK"	"OK"	"OK"	"OK"	"OK"

Check for NG entries. If zero, all checks are satisfied.

$$Number_{NG} := \left| \begin{array}{l} \text{for } i \in 1 .. rows(chk) \\ \quad \text{for } j \in 1 .. cols(chk) \\ \quad\quad Num \leftarrow Num + 1 \text{ if } chk_{i,j} = \text{"NG"} \\ Num \end{array} \right. = 0.0$$

1 Structure

Design span $L := 120 \cdot ft$

Roadway width $BW := 43 \cdot ft$ barrier face to barrier face

Girder spacing $S := 9 \cdot ft$

Skew angle $\theta := 0 \cdot deg$

No. of girder $N_b := 5$

Curb width on deck, $cw := 10.5 \cdot in$

Deck overhang (centerline of exterior girder to end of deck) $overhang := \frac{BW - (N_b - 1) \cdot S}{2} + cw$ $overhang = 4.375\ ft$

Future overlay (2" HMA), $w_{hma} := 0.140kcf \cdot 2in$ $w_{hma} = 0.023 \frac{kip}{ft^2}$

2 Criteria and assumptions

2.1 Design Live Load for Decks

(§3.6.1.3.3, not for empirical design method) Where deck is designed using the approximate strip method, specified in §4.6.2.1, the live load shall be taken as the wheel load of the 32.0 kip axle of the design truck, without lane load, where the strips are transverse.

$if(S \le 15 \cdot ft, "OK", "NG") = "OK"$ (§3.6.1.3.3)

The design truck or tandem shall be positioned transversely such that the center of any wheel load is not closer than (§3.6.1.3.1)

for the design of the deck overhang - 1 ft from the face of the curb or railing , and

for the design of all other components - 2 ft from the edge of the design lane.

(§3.6.1.3.4) For deck overhang design with a cantilever, not exceeding 6.0 ft from the centerline of the exterior girder to the face of a continuous concrete railing, the wheel loads may be replaced with a uniformly distributed line load of 1.0 klf intensity, located 1 ft from the face of the railing.

$if(overhang - cw \le 6 \cdot ft, "OK", "NG") = "OK"$

Horizontal loads on the overhang resulting from vehicle collision with barriers shall be considered in accordance with the yield line analysis.

2.2 Dynamic Load Allowance (impact)

$IM := 0.33$ (§3.6.2.1)

2.3 Minimum Depth and Cover (§9.7.1)

slab design thickness $t_{s1} := 7 \cdot in$

for D.L. calculation $t_{s2} := 7.5 \cdot in$

min. depth $if(t_{s1} \ge 7.0 \cdot in, "OK", "NG") = "OK"$

top concrete cover = 1.5 in. (up to #11 bar) (§5.12.4 & Table 5.12.3-1)
use 2.5 in. (Office Practice)
bottom concrete cover = 1 in. (up to #11 bar)
sacrificial thickness = 0.5 in. (§2.5.2.4)

2.4 Skew Deck (§9.7.1.3 and BDM §5.7.2)

The primary reinforcement shall be placed perpendicular to the main supporting components.

3 Material Properties

3.1 Concrete

$f'_c := 4 \cdot ksi$ Use **CLASS 4000D** for bridge concrete deck (BDM 5.1.1)

$f_{r2} := 0.37 \cdot \sqrt{\frac{f'_c}{ksi}} \cdot ksi$ $f_{r2} = 0.74\,ksi$ (§5.4.2.6) for use in §5.7.3.3.2

$w_c := 0.160 \cdot kcf$

$E_c := 33000 \cdot \left(\frac{w_c}{kcf}\right)^{1.5} \cdot \sqrt{\frac{f'_c}{ksi}} \cdot ksi$ $E_c = 4224.0\,ksi$ (§5.4.2.4)

3.2 Reinforcing Steel (§5.4.3)

$f_y := 60 \cdot ksi$ $E_s := 29000 \cdot ksi$

4 Methods of Analysis

Concrete deck slabs may be analyzed by using

Approximate elastic methods of analysis, or
Refined methods of analysis, or
Empirical design.

Per office practice, concrete deck slab shall be designed and detailed for both empirical and traditional design methods.

5 Empirical Design (§9.7.2)

5.1 Limit States (§9.5.1)

For other than the deck overhang, where empirical design is used, a concrete deck maybe assumed to satisfy service, fatigue and fracture and strength limit states requirements.

Empirical design shall not be applied to overhangs (§9.7.2.2).

5.2 Design Conditions (§9.7.2.4)

For the purpose of empirical design method, the effective length S_{eff} shall be taken as (§9.7.2.3),

web thickness $b_w := 6.125 \cdot in$

top flange width $b_f := 49 \cdot in$

$S_{eff} := S - b_f + \frac{b_f - b_w}{2}$ $S_{eff} = 6.7\,ft$

The design depth of the slab shall exclude the loss that is expected to occur as a result of grinding, grooving, or wear.

$if\left(18.0 \geq \frac{S_{eff}}{t_{s1}} \geq 6.0, "OK", "NG"\right) = "OK"$ $\frac{S_{eff}}{t_{s1}} = 11.491$

core depth $if\left(t_{s2} - 2.5 \cdot in - 1 \cdot in \geq 4 \cdot in, "OK", "NG"\right) = "OK"$

$if\left(S_{eff} \leq 13.5 \cdot ft, "OK", "NG"\right) = "OK"$

$if\left(t_{s1} \geq 7in, "OK", "NG"\right) = "OK"$

$if\left(overhang \geq 3 \cdot t_{s1}, "OK", "NG"\right) = "OK"$ $overhang = 52.5\,in$ $3 \cdot t_{s1} = 21\,in$

a structurally continuous concrete barrier is made composite with the overhang,

$if\left(f'_c \geq 4 \cdot ksi, "OK", "NG"\right) = "OK"$

The deck is made composite with the supporting structural components.

Composite construction **for steel girder (N/A)**

A minimum of two shear connectors at 2 ft centers shall be provided in the M- region of continuous steel superstructures.

5.3 Optional deflection criteria for span-to-depth ratio (LRFD Table 2.5.2.6.3.1)

For slabs with main reinforcement parallel to traffic (however, the criteria is used per Office Practice)

Min. Depth (continuous span) where $S_{eff} = 6.703\,ft$ (slab span length):

$if\left[\max\left(\left(\frac{S_{eff} + 10 \cdot ft}{30}\right)\left(\frac{}{0.54 \cdot ft}\right)\right) \leq t_{s2}, "OK", "NG"\right] = "OK"$ $\max\left(\left(\frac{S_{eff} + 10 \cdot ft}{30}\right)\left(\frac{}{0.54 \cdot ft}\right)\right) = 6.7\,in$

5.4 Reinforcement Requirement (§9.7.2.5)

Four layers of reinforcement is required in empirically designed slabs.

The amount of deck reinforcement shall be (§C9.7.2.5)

0.27 in^2/ft for each bottom layer (0.3% of the gross area of 7.5 in. slab)

0.18 in^2/ft for each top layer (0.2% of the gross area)

Try #5 @ 14 in. for bottom longitudinal and transverse, $0.31 \cdot in^2 \cdot \frac{1 \cdot ft}{14 \cdot in} = 0.27\,in^2$ per ft

#4 @ 12 in. for top longitudinal and transverse. $0.2 \cdot in^2 \cdot \frac{1 \cdot ft}{12 \cdot in} = 0.2\,in^2$ per ft

Spacing of steel shall not exceed 18 in.

$\text{if}(\theta \geq 25 \cdot deg, \text{"OK"}, \text{"NG"}) = \text{"NG"}$ if OK, double the specified reinforcement in the end zones, taken as a longitudinal distance equal to S_{eff}.

6 Traditional Design

6.1 Design Assumptions for Approx. Method of Analysis (§4.6.2)

Deck shall be subdivided into strips perpendicular to the supporting components (§4.6.2.1.1).
Continuous beam with span length as center to center of supporting elements (§4.6.2.1.6).
Wheel load may be modeled as concentrated load or load based on tire contact area.
Strips should be analyzed by classical beam theory.

6.2 Width of Equivalent Interior Strip (§4.6.2.1.3)

Strip width calculations are not needed since live load moments from Table A4-1 are used.

Spacing in secondary direction (spacing between diaphragms):

$L_d := \frac{L}{4}$ $L_d = 30.0\ ft$

Spacing in primary direction (spacing between girders):

$S = 9\ ft$

Since $\text{if}\left(\frac{L_d}{S} \geq 1.50, \text{"OK"}, \text{"NG"}\right) = \text{"OK"}$, where $\frac{L_d}{S} = 3.33$ (§4.6.2.1.5)

Therefore, all the wheel load shall be applied to primary strip. Otherwise, the wheels shall be distributed between intersecting strips based on the stiffness ratio of the strip to sum of the strip stiffnesses of intersecting strips.

6.3 Limit States (§5.5.1)

Where traditional design based on flexure is used, the requirements for strength and service limit states shall be satisfied.
Extreme event limit state shall apply for the force effect transmitted from the bridge railing to bridge deck (§13.6.2).
Fatigue need not be investigated for concrete deck slabs in multi-girder applications (§5.5.3.1).

6.4 Strength Limit States

Resistance factors (§5.5.4.2.1)

$\phi_f := 0.90$ for flexure and tension of reinforced concrete

$\phi_v := 0.90$ for shear and torsion

Load Modifier

$\eta_D := 1.00$ for conventional design (§1.3.3)

$\eta_R := 1.00$ for conventional level of redundancy (§1.3.4)

$\eta_I := 1.00$ for typical bridges (§1.3.5)

$\eta := \max\left(\begin{pmatrix} \eta_D \cdot \eta_R \cdot \eta_I \\ 0.95 \end{pmatrix}\right)$ $\eta = 1$ (§1.3.2)

Strength I load combination - normal vehicular load without wind (§3.4.1)

Load factors (LRFD Table 3.4.1-1&2):

$\gamma_{dc} := 1.25$ for component and attachments

$\gamma_{dw} := 1.50$ for wearing surface and utilities (max.)

$\gamma_L := 1.75$ for LL

Multiple presence factor (§3.6.1.1.2):

$M_1 := 1.20$ 1 truck

$M_2 := 1.00$ 2 trucks

$M_3 := 0.85$ 3 trucks (Note; 3 trucks never control for girder spacings up to 15.5 ft, per training notes)

6.4.1 Moment Force Effects Per Strip (§4.6.2.1.6)

The design section for negative moments and shear forces may be taken as follows:

Prestressed girder - shall be at 1/3 of flange width < 15 in.

Steel girder - 1/4 of flange width from the centerline of support.

Concrete box beams - at the face of the web.

web thickness $b_w = 6.13\,in$

top flange width $b_f = 49\,in$

Design critical section for negative moment and shear shall be at d_c, (§4.6.2.1.6)

$d_c := \min\left(\begin{pmatrix} \frac{b_f}{3} \\ 15 \cdot in \end{pmatrix}\right)$ $d_c = 15\,in$ from CL of girder (may be too conservative, see training notes)

Maximum factored moments **per unit width** based on Table A4-1: for $S = 9\ ft$

(include multiple presence factors and the dynamic load allowance)

applicability $\text{if}[\min((0.625 \cdot S \quad 6 \cdot ft)) \geq \text{overhang} - cw, \text{"OK"}, \text{"NG"}] = \text{"OK"}$

$\text{if}\left(N_b \geq 3, \text{"OK"}, \text{"NG="}\right) = \text{"OK"}$

$M_{LLp} := 6.29 \cdot \frac{kip \cdot ft}{ft}$

$M_{LLn} := 3.51 \cdot \frac{kip \cdot ft}{ft}$ (max. -M at d_c from CL of girder)

Dead load moments

$M_{DCp} := \frac{t_{s2} \cdot w_c \cdot S^2}{10}$ $M_{DCp} = 0.81 \frac{kip \cdot ft}{ft}$ (max. $+M_{DC}$)

$M_{DWp} := \frac{w_{hma} \cdot S^2}{10}$ $M_{DWp} = 0.189 \frac{kip \cdot ft}{ft}$ (max. $+M_{Dw}$)

$M_{DCn} := M_{DCp}$ $M_{DCn} = 0.81 \frac{kip \cdot ft}{ft}$ (max. $-M_{DC}$ at d_c at interior girder)

$M_{DWn} := M_{DWp}$ $M_{DWn} = 0.189 \frac{kip \cdot ft}{ft}$ (max. $-M_{Dw}$ at d_c at interior girder)

Factored positive moment per ft

$M_{up} := \eta \cdot (\gamma_{dc} \cdot M_{DCp} + \gamma_{dw} \cdot M_{DWp} + \gamma_L \cdot M_{LLp})$ $M_{up} = 12.3 \frac{kip \cdot ft}{ft}$

Factored negative moment

$M_{un} := \eta \cdot (\gamma_{dc} \cdot M_{DCn} + \gamma_{dw} \cdot M_{DWn} + \gamma_L \cdot M_{LLn})$ $M_{un} = 7.44 \frac{kip \cdot ft}{ft}$

6.4.2 Flexural Resistance

Normal flexural resistance of a rectangular section may be determined by using equations for a flanged section in which case b_w shall be taken as b (§5.7.3.2.3).

$\beta_1 := if\left[f'_c \le 4 \cdot ksi, 0.85, 0.85 - 0.05 \cdot \left(\frac{f'_c - 4.0 \cdot ksi}{1.0 \cdot ksi}\right)\right]$ $\beta_1 := \begin{cases} \beta_1 & \text{if } \beta_1 \ge 0.65 \\ 0.65 & \text{otherwise} \end{cases}$

$\beta_1 = 0.85$ (§5.7.2.2)

6.4.3 Design for Positive Moment Region

assume bar # $bar_p := 5$

$dia(bar) := \begin{cases} 0.5 \cdot in & \text{if } bar = 4 \\ 0.625 \cdot in & \text{if } bar = 5 \\ 0.75 \cdot in & \text{if } bar = 6 \end{cases}$

$d_p := t_{s1} - 1 \cdot in - \frac{dia(bar_p)}{2}$ $d_p = 5.7\,in$

$A_s := \frac{0.85 \cdot f'_c \cdot ft}{f_y} \cdot \left(d_p - \sqrt{d_p^2 - \frac{2 \cdot M_{up} \cdot ft}{0.85 \cdot \phi_f \cdot f'_c \cdot ft}}\right)$ $A_s = 0.52\,in^2$ per ft

use (bottom-transverse) # $bar_p = 5$ $s_p := 7.5 \cdot in$ (max. spa. 12 in. per BDM memo)

$$A_b(bar) := \begin{cases} 0.20\cdot in^2 & \text{if } bar = 4 \\ 0.31\cdot in^2 & \text{if } bar = 5 \\ 0.44\cdot in^2 & \text{if } bar = 6 \end{cases}$$

$A_{sp} := A_b(bar_p)\cdot\frac{1\cdot ft}{s_p}$ $A_{sp} = 0.5\,in^2$ per ft

Check min. reinforcement (§5.7.3.3.2),

$M_{cr} := f_{r2}\cdot\frac{1}{6}\cdot 12\cdot in\cdot t_{s2}^2$ $1.2\cdot M_{cr} = 8.325\,kip\cdot ft$ $M_{up}\cdot ft = 12.30\,kip\cdot ft$

$if(M_{up}\cdot ft \geq 1.2\cdot M_{cr}, "OK", "NG") = "OK"$

6.4.4 Design for Negative Moment Region

assume bar # $bar_n := 5$

$d_n := t_{s1} - 2.0\cdot in - \frac{dia(bar_n)}{2}$ $d_n = 4.69\,in$

$A_s := \frac{0.85\cdot f'_c\cdot ft}{f_y}\cdot\left(d_n - \sqrt{d_n^2 - \frac{2\cdot M_{un}\cdot ft}{0.85\cdot\phi_f\cdot f'_c\cdot ft}}\right)$ $A_s = 0.37\,in^2$ per ft

use (top-transverse) bar # $bar_n = 5$ $s_n := 7.5\cdot in$ (max. spa. 12 in. per BDM memo)

$A_{sn} := A_b(bar_n)\cdot\frac{1\cdot ft}{s_n}$ $A_{sn} = 0.5\,in^2$ per ft

Check min. reinforcement (§5.7.3.3.2),

$M_{cr} := f_{r2}\cdot\frac{1}{6}\cdot 12\cdot in\cdot t_{s2}^2$ $1.2\cdot M_{cr} = 8.325\,kip\cdot ft$ $M_{un}\cdot ft = 7.438\,kip\cdot ft$

$if(M_{un}\cdot ft \geq 1.2\cdot M_{cr}, "OK", "NG") = "NG"$

Design for 1.2 Mcr,

$\frac{0.85\cdot f'_c\cdot ft}{f_y}\cdot\left(d_n - \sqrt{d_n^2 - \frac{2\cdot 1.2\cdot M_{cr}}{0.85\cdot\phi_f\cdot f'_c\cdot ft}}\right) = 0.42\,in^2$ **Say OK**

6.5 Control of Cracking by Distribution of Reinforcement (§5.7.3.4)

Service I load combination is to be considered for crack width control (§3.4.1).

Combined limit state load modifier (§1.3.2)

$\eta_s := 1$

Load factors (LRFD Table 3.4.1-1):

$\gamma_{dc} := 1.00$ for component and attachments

$\gamma_{dw} := 1.00$ for wearing surface and utilities (max.)

$\gamma_L := 1.00$ for LL

$M_{sp} := \eta_s \cdot (\gamma_{dc} \cdot M_{DCp} + \gamma_{dw} \cdot M_{DWp} + \gamma_L \cdot M_{LLp})$ $M_{sp} = 7.29 \frac{kip \cdot ft}{ft}$

$M_{sn} := \eta_s \cdot (\gamma_{dc} \cdot M_{DCn} + \gamma_{dw} \cdot M_{DWn} + \gamma_L \cdot M_{LLn})$ $M_{sn} = 4.51 \frac{kip \cdot ft}{ft}$

$\gamma_{ep} := 0.75$ for Class 2 exposure condition for deck (assumed)

$\gamma_{en} := 0.75$ for Class 2 exposure condition for deck (assumed)

$h := t_{s1}$ $h = 7\,in$

$\rho_p := \frac{A_{sp}}{d_p \cdot 12 \cdot in}$ $\rho_n := \frac{A_{sn}}{d_n \cdot 12 \cdot in}$

$n := \frac{E_s}{E_c}$ $n = 6.866$ $n := \max([\,\mathrm{ceil}((n - 0.495))\;\; 6\,])$

set $n = 7$ (round to nearest integer, §5.7.1, not less than 6)

$k(\rho) := \sqrt{(\rho \cdot n)^2 + 2 \cdot \rho \cdot n} - \rho \cdot n$ $k(\rho_p) = 0.272$

$j(\rho) := 1 - \frac{k(\rho)}{3}$ $j(\rho_p) = 0.909$

$f_{sa} := \frac{M_{sp} \cdot ft}{A_{sp} \cdot j(\rho_p) \cdot d_p}$ $f_{sa} = 34.1\,ksi$

for $bar_p = 5$ $s_p = 7.5\,in$

$d_c := (1 \cdot in) + \frac{dia(bar_p)}{2}$ $d_c = 1.3\,in$ (the actual concrete cover is to be used to compute d_c)

$\beta_s := 1 + \frac{d_c}{0.7(h - d_c)}$ $\beta_s = 1.33$

$\mathrm{if}\left(s_p \le \frac{700 \cdot \gamma_{ep} \cdot in}{\beta_s \cdot \frac{f_{sa}}{ksi}} - 2 \cdot d_c, \text{"OK"}, \text{"NG"}\right) = \text{"OK"}$ where $s_p = 7.5\,in$ $\frac{700 \cdot \gamma_{ep} \cdot in}{\beta_s \cdot \frac{f_{sa}}{ksi}} - 2 \cdot d_c = 9.0\,in$

$k(\rho_n) = 0.295$ $j(\rho_n) = 0.902$

$$f_{sa} := \frac{M_{sn} \cdot ft}{A_{sn} \cdot j(\rho_n) \cdot d_n} \qquad f_{sa} = 25.8\,ksi$$

for $bar_n = 5$ $s_n = 7.5\,in$

$$d_c := 2in + \frac{dia(bar_n)}{2} \qquad d_c = 2.31\,in$$ (the actual concrete cover is to be used to compute d_c)

$$\beta_s := 1 + \frac{d_c}{0.7(h - d_c)} \qquad \beta_s = 1.705$$

$$if\left(s_n \le \frac{700 \cdot \gamma_{en} \cdot in}{\beta_s \cdot \frac{f_{sa}}{ksi}} - 2 \cdot d_c, "OK", "NG"\right) = "NG"$$ where $s_n = 7.5\,in$ $\frac{700 \cdot \gamma_{en} \cdot in}{\beta_s \cdot \frac{f_{sa}}{ksi}} - 2 \cdot d_c = 7.3\,in$

say OK

6.6 Shrinkage and Temperature Reinforcement (§5.10.8.2)

For components less than 48 in. thick,

where $A_g := t_{s2} \cdot 1 \cdot ft$

$$A_{tem} := 0.11 \cdot \frac{A_g \cdot ksi}{f_y} \qquad A_{tem} = 0.17\,in^2$$ per ft

The spacing of this reinforcement shall not exceed $3 \cdot t_{s1} = 21\,in$ or 18 in (**per BDM memo 12 in.)**

top longitudinal - $bar := 4$ $s := 12 \cdot in$ $A_s := A_b(bar) \cdot \frac{1 \cdot ft}{s}$ $A_s = 0.2\,in^2$ per ft **OK**

6.7 Distribution of Reinforcement (§9.7.3.2)

The effective span length S_{eff} shall be taken as (§9.7.2.3):

$S_{eff} = 6.70\ ft$

For primary reinforcement perpendicular to traffic:

$$percent := \min\left(\left(\frac{220}{\sqrt{\frac{S_{eff}}{ft}}} \quad 67\right)\right) \qquad percent = 67$$

Bottom longitudinal reinforcement (**per BDM memo < slab thickness**): $t_{s2} = 7.5\,in$

$A_s := \frac{percent}{100} \cdot A_{sp}$ $A_s = 0.33\,in^2$ per ft

use bar # $bar := 4$ $s := 7.5 \cdot in$ $A_s := A_b(bar) \cdot \frac{1 \cdot ft}{s}$ $A_s = 0.32\,in^2$ per ft **OK**

6.8 Maximum bar spacing (§5.10.3.2)

Unless otherwise specified, the spacing of the primary reinforcement in walls and slabs shall not exceed 1.5 times the thickness of the member or 18 in.. The maximum spacing of temperature shrinkage reinforcement shall be as specified in §5.10.8.

$1.5 \cdot t_{s1} = 10.5\,in$ **OK**

6.9 Protective Coating (§5.12.4)

Epoxy coated reinforcement shall be specified for both top and bottom layer slab reinforcements except only top layer when the slab is with longitudinal post-tensioning.

7 Slab Overhang Design

(§3.6.1.3.4) Horizontal loads resulting from vehicular collision with barrier shall be considered in accordance with the provisions of LRFD Section 13.
(§13.7.3.1.2) Unless a lesser thickness can be proven satisfactory during the crash testing procedure, the min. edge thickness for concrete deck overhangs shall be taken as 8 in. for concrete deck overhangs supporting concrete parapets or barriers.

7.1 Applicable Limit States (§5.5.1)

Where traditional design based on flexure is used, the requirements for strength and service limit states shall be satisfied.

Extreme event limit state shall apply for the force effect transmitted from the bridge railing to bridge deck (§13.6.2).

7.2 Strength Limit state

Load Modifier

$\eta_D := 1.00$ for ductile components and connections (§1.3.3 & simplified)

$\eta_R := 1.00$ for redundant members (§1.3.4)

$\eta_I := 1.00$ for operationally important bridge (§1.3.5)

$\eta := \max\left(\begin{pmatrix} \eta_D \cdot \eta_R \cdot \eta_I \\ 0.95 \end{pmatrix}\right)$ $\eta = 1$ (§1.3.2)

Load factors (LRFD Table 3.4.1-1):

$\gamma_{dc} := 1.25$ for component and attachments

$\gamma_{dw} := 1.50$ for wearing surface and utilities (max.)

$\gamma_L := 1.75$ for LL

7.3 Extreme Event Limit State II

Extreme event limit state shall apply for the force effect transmitted from the vehicular collision force.

Load Modifier

$\eta_D := 1.00$ (§1.3.3)

$\eta_R := 1.00$ (§1.3.4)

$\eta_I := 1.00$ (§1.3.5)

$\eta_e := \max\left(\begin{pmatrix} \eta_D \cdot \eta_R \cdot \eta_I \\ 0.95 \end{pmatrix}\right)$ $\eta_e = 1$ (§1.3.2)

Load factors (LRFD Table 3.4.1-1):

$\gamma_{dc} := 1.25$ for component and attachments

$\gamma_{dw} := 1.50$ for wearing surface and utilities (max.)

$\gamma_{CT} := 1.00$ for collision force

7.4 Vehicular Collision Force (§13.7.2)

Railing test level TL-4 applies for high-speed highways, freeways, and interstate highways with a mixture of trucks and heavy vehicles.

The transverse and longitudinal loads need not be applied in conjunction with vertical loads (§A13.2). Design forces for railing test level **TL-4** (LRFD Table A13.2-1),

transverse $F_t := 54 \cdot kip$

longitudinal $F_L := 18 \cdot kip$

vertical (down) $F_v := 18 \cdot kip$

Effective Distances:

transverse $L_t := 3.50 \cdot ft$

longitudinal $L_L := 3.50 \cdot ft$

vertical $L_v := 18 \cdot ft$

Min. design height, H, 32 in. (LRFD Table A13.2-1) use $H := 32 \cdot in$

7.5 Design Procedure (§A13.3)

Yield line analysis and strength design for reinforced concrete may be used.

7.6 Nominal Railing Resistance (§A13.3)

For F-shape barriers, the approximate flexural resistance may be taken as:

Flexural capacity about vertical axis,

$M_w := 35.62 \cdot kip \cdot ft$

Additional flexural resistance of beam in addition to M_w, if any, at top of wall,

$M_b := 10.27 \cdot kip \cdot ft$

Flexural capacity about horizontal axis,

$M_c := 19.21 \cdot \frac{kip \cdot ft}{ft}$

Critical wall length, over which the yield mechanism occurs, L_c, shall be taken as:

$$L_c := \frac{L_t}{2} + \sqrt{\left(\frac{L_t}{2}\right)^2 + \frac{8 \cdot H \cdot (M_b + M_w)}{M_c}} \qquad L_c = 9.1\ ft$$

For impact within a barrier segment, the total transverse resistance of the railing may be taken as:

$$R_w := \left(\frac{2}{2 \cdot L_c - L_t}\right) \cdot \left(8 \cdot M_b + 8 \cdot M_w + \frac{M_c \cdot L_c^{\,2}}{H}\right) \qquad R_w = 131.11\ kip$$

7.7 Design Load Cases (§A13.4.1)

Case 1

Transverse and longitudinal forces at extreme event limit state.

Resistance factor (§A13.4.3.2) $\phi := 1.0$

(§C13.7.3.1.2) Presently, in adequately designed bridge deck overhangs, the major crash-related damage occurs in short sections of slab areas where the barriers is hit.

a. at inside face of parapet

$$M_s := \frac{\min\left(\left(R_w \quad 1.2 \cdot F_t\right)\right) \cdot H}{L_c + 2 \cdot H}$$ moment capacity of the base of the parapet (see memo),

$M_s = 11.97 \frac{kip \cdot ft}{ft}$

$M_{DCa} := 0.45 \cdot \frac{kip \cdot ft}{ft}$ DL M- at edge of curb (see deck.gts STRUDL output),

$cw = 0.875\ ft$

design moment

$$M_u := \eta_e \cdot \left(\gamma_{dc} \cdot M_{DCa} + \gamma_{CT} \cdot M_s\right) \qquad M_u = 12.5 \frac{kip \cdot ft}{ft}$$

(§A13.4.2) Deck overhang may be designed to provide a flexural resistance, M_s, which is acting in coincident with tensile force, T (see memo),

$$T := \frac{\min\left(\left(R_w \quad 1.2 \cdot F_t\right)\right) \cdot ft}{L_c + 2 \cdot H} \qquad T = 4.49\,kip \qquad \text{per ft}$$

min. "haunch+slab" dimension, $A = 8.25\,in$

$A := t_{s2} + 0.75 \cdot in$

d_s, flexural moment depth at edge of curb,

assume bar # $bar_o := 5$

$$d_s := \left(7 \cdot in + \frac{A - 7 \cdot in}{overhang - 0.5 \cdot b_f} \cdot cw\right) - 2.5 \cdot in - \frac{dia\left(bar_o\right)}{2} \qquad d_s = 4.7\,in$$

A_s required for M_u and T,

$$A_s := \frac{0.85 \cdot f'_c \cdot ft}{f_y} \cdot \left(d_s - \sqrt{{d_s}^2 - \frac{2 \cdot M_u \cdot ft}{0.85 \cdot \phi \cdot f'_c \cdot ft}}\right) + \frac{T}{f_y} \qquad A_s = 0.67\,in^2 \qquad \text{per ft} \qquad (1)$$

Check max. reinforcement (§5.7.3.3.1)

The max. amount of prestressed and non-prestressed reinforcement shall be such that

where d_e $\qquad d_e := d_s \qquad d_e = 4.7\,in$

$$c := \frac{A_s \cdot f_y - T}{0.85 \cdot \beta_1 \cdot f'_c \cdot 1 \cdot ft} \qquad c = 1\,in$$

$$\text{if}\left(\frac{c}{d_e} \le 0.42, \text{"OK"}, \text{"NG"}\right) = \text{"OK"} \qquad \frac{c}{d_e} = 0.221$$

The section is not over-reinforced. Over-reinforced reinforced concrete sections shall not be permitted.

b. at design section in the overhang

Design critical section for negative moment and shear shall be at d_c, (§4.6.2.1.6)

$$d_c := \min\left(\left(\frac{b_f}{3} \quad 15 \cdot in\right)\right) \qquad d_c = 15\,in$$

from CL of girder (may be too conservative, see training notes)

At the inside face of the parapet, the collision forces are distributed over a distance L_c for the moment and $L_c + 2H$ for the axial force. Similarly, assume the distribution length is increased in a 30 degree angle from the base of the parapet,

Collision moment at design section,

$$M_{se} := \frac{M_s \cdot L_c}{L_c + 2 \cdot 0.577 \cdot (overhang - cw - d_c)} \qquad M_{se} = 9.31 \frac{kip \cdot ft}{ft}$$

dead load moment @ d_c **from CL of exterior girder** (see deck.gts STRUDL output)

$overhang - d_c = 3.125\ ft$ from edge of deck

$$M_{DCb} := 1.96 \cdot \frac{kip \cdot ft}{ft} \qquad M_{DWb} := 0.06 \cdot \frac{kip \cdot ft}{ft}$$

design moment

$$M_u := \eta_e \cdot (\gamma_{dc} \cdot M_{DCb} + \gamma_{dw} \cdot M_{DWb} + \gamma_{CT} \cdot M_{se}) \qquad M_u = 11.85 \frac{kip \cdot ft}{ft}$$

(§A13.4.2) design tensile force, T,

$$T := \frac{\min((R_w \quad 1.2 \cdot F_t)) \cdot ft}{L_c + 2 \cdot H + 2 \cdot 0.577 \cdot (overhang - cw - d_c)} \qquad T = 3.81\ kip \quad \text{per ft}$$

d_s, flexural moment depth at design section in the overhang.

$$d_s := A - 2.5 \cdot in - \frac{dia(bar_o)}{2} \qquad d_s = 5.4\ in$$

A_s required for M_u and T,

$$\frac{0.85 \cdot f'_c \cdot ft}{f_y} \cdot \left(d_s - \sqrt{d_s^2 - \frac{2 \cdot M_u \cdot ft}{0.85 \cdot \phi \cdot f'_c \cdot ft}} \right) + \frac{T}{f_y} = 0.53\ in^2 \quad \text{per ft} \quad \text{(doesn't control)} \quad (2)$$

c. at design section in first interior span

The collision moment per unit width at the section under consideration can then be determined using the 30° distribution.

$$M_s = 11.97 \frac{kip \cdot ft}{ft}$$

Collision moment at at d_c from the exterior girder, (see deck.gts output, barrierM factor for 1 kip-ft of Ms),

$$M_{si} := M_s \cdot 0.824 \qquad M_{si} = 9.87 \frac{kip \cdot ft}{ft}$$

Using the 30° angle distribution, design moment

$$M_{si} := \frac{M_{si} \cdot L_c}{L_c + 2 \cdot 0.577 \cdot (overhang - cw + d_c)} \qquad M_{si} = 6.16 \frac{kip \cdot ft}{ft}$$

dead load moment @ this section (see deck.gts output) $d_c = 1.25\ ft$

$M_{DCi} := 2.11 \cdot \frac{kip \cdot ft}{ft}$ $M_{DWi} := 0.03 \cdot \frac{kip \cdot ft}{ft}$

design moment

$M_u := \eta_e \cdot (\gamma_{dc} \cdot M_{DCi} + \gamma_{dw} \cdot M_{DWi} + \gamma_{CT} \cdot M_{si})$ $M_u = 8.84 \frac{kip \cdot ft}{ft}$

d_s, flexural moment depth at the design section,

$d_s := t_{s1} - 2.0 \cdot in - \frac{dia(bar_o)}{2}$ $d_s = 4.69\,in$

A_s required for M_u,

$$\frac{0.85 \cdot f'_c \cdot ft}{f_y} \cdot \left(d_s - \sqrt{d_s^2 - \frac{2 \cdot M_u \cdot ft}{0.85 \cdot \phi \cdot f'_c \cdot ft}} \right) = 0.4\,in^2 \quad \text{per ft} \quad \text{(doesn't control)} \qquad (3)$$

Case 2 Vertical collision force

For concrete parapets, the case of vertical collision never controls.

Case 3 Check DL + LL

Resistance factor (§1.3.2.1) $\phi_f := 0.9$

For deck overhangs, where applicable, the §3.6.1.3.4 may be used in lieu of the equivalent strip method (§4.6.2.1.3).

a. at design section in the overhang

moment arm for 1.0 kip/ft live load (§3.6.1.3.4)

$x := overhang - cw - 1 \cdot ft - d_c$ $x = 15\,in$

live load moment without impact,

$w_L := 1.0 \cdot \frac{kip}{ft}$

$M_{LL} := M_1 \cdot w_L \cdot x$ $M_{LL} = 1.5 \frac{kip \cdot ft}{ft}$

factored moment

$M_u := \eta \cdot \left[\gamma_{dc} \cdot M_{DCb} + \gamma_{dw} \cdot M_{DWb} + \gamma_L \cdot M_{LL} \cdot (1.0 + IM) \right]$ $M_u = 6.03 \frac{kip \cdot ft}{ft}$

d_s, flexural moment depth at edge of curb,

$d_s := A - 2.5 \cdot in - \frac{dia(bar_o)}{2}$ $d_s = 5.44\,in$

A_s required for M_u,

$$\frac{0.85 \cdot f'_c \cdot ft}{f_y} \cdot \left(d_s - \sqrt{d_s^2 - \frac{2 \cdot M_u \cdot ft}{0.85 \cdot \phi_f \cdot f'_c \cdot ft}} \right) = 0.26\,in^2 \quad \text{per ft} \quad \text{(doesn't control)} \quad (4)$$

b. at design section in first span

Assume slab thickness at this section, $t_{s1} = 7\,in$

use the same D.L. + L.L moment as in previous for design (approximately)

factored moment $M_u = 6.03\,\frac{kip \cdot ft}{ft}$

d_s, flexural moment depth at edge of curb,

$$d_s := t_{s1} - 2.0 \cdot in - \frac{dia(bar_o)}{2} \qquad d_s = 4.7\,in$$

A_s required for M_u,

$$\frac{0.85 \cdot f'_c \cdot ft}{f_y} \cdot \left(d_s - \sqrt{d_s^2 - \frac{2 \cdot M_u \cdot ft}{0.85 \cdot \phi_f \cdot f'_c \cdot ft}} \right) = 0.3\,in^2 \quad \text{(doesn't control)} \quad (5)$$

The largest of (1) to (5), As required, $A_s = 0.67\,in^2$ per ft

use bar # $bar_o = 5$ @ $s := 22.5 \cdot in$ **(top transverse) at edge of curb, put 1 #5 between every other top bar in the deck overhang region**

$bar_n = 5$ $s_n = 7.5\,in$

$$A_s := A_b(bar_o) \cdot \frac{1 \cdot ft}{s} + A_b(bar_n) \cdot \frac{1 \cdot ft}{s_n} \qquad A_s = 0.66\,in^2 \qquad \textbf{say OK}$$

Determine the point in the first bay of the deck where the additional bars are no longer needed,

$$A_s := A_b(bar_n) \cdot \frac{1 \cdot ft}{s_n} \qquad A_s = 0.5\,in^2$$

$$c := \frac{A_s \cdot f_y}{0.85 \cdot \beta_1 \cdot f'_c \cdot 1 \cdot ft} \qquad c = 0.9\,in$$

$$d_e := t_{s1} - 2.0 \cdot in - \frac{dia(bar_n)}{2} \qquad d_e = 4.7\,in$$

$a := \beta_1 \cdot c$ $a = 0.7\,in$

For the strength limit state,

$$M_{cap} := \phi_f \cdot A_s \cdot f_y \cdot \left(d_e - \frac{a}{2} \right) \qquad M_{cap} = 9.65\,kip \cdot ft \quad \text{per ft}$$

For the extreme event limit state,

$$M_{cap} := \phi \cdot A_s \cdot f_y \cdot \left(d_e - \frac{a}{2} \right) \qquad M_{cap} = 10.72\,kip \cdot ft \qquad \text{per ft}$$

By inspection of (1) to (5), no additional bar is required beyond design section of the first bay.

Cut off length requirement (§5.11.1.2)

$15 \cdot dia(bar_o) = 0.781\ ft$ (controls by inspection)

8 Reinforcing Details

8.1 Development of Reinforcement (§5.11.2.1.1)

basic development length for #11 bar and smaller,

$$L_{db}(d_b, A_b) := \max\left(\begin{pmatrix} 1.0 \cdot ft \\ \dfrac{1.25 \cdot A_b \cdot f_y \cdot \sqrt{ksi}}{in \cdot ksi \cdot \sqrt{f'_c}} \\ 0.4 \cdot d_b \cdot \dfrac{f_y}{ksi} \end{pmatrix} \right)$$

For **#5** bars, $L_{db}(0.625 \cdot in, 0.31 \cdot in^2) = 15\,in$

For **#6** bars, $L_{db}(0.75 \cdot in, 0.44 \cdot in^2) = 18\,in$

For **epoxy coated** bars (§5.11.2.1.2),

with cover less than $3d_b$ or with clear spacing less than $6d_b$ .....times 1.5

not covered above .....times 1.2

For **widely spaced** bars..... times 0.8 (§5.11.2.1.3)

bars spaced laterally not less than 6 in. center-to-center, with not less than 3. in clear cover measured in the direction of spacing.

For **bundled** bars..... times 1.2 for a three-bar bundle (§5.11.2.3)

Lap Splices in Tension (§5.11.5.3.1)

The length of lap for tension lap splices shall not be less than either 12 in. or the following for Class A, B, or C splices:

Class A splice ..... times 1.0
Class B splice ..... times 1.3
Class C splice ..... times 1.7

Flexural Reinforcement (§5.11.1.2)

Except at supports of simple-spans and at the free ends of cantilevers, reinforcement shall be extended beyond the point at which it is no longer required to resist flexure for a distance not less than:

the effective depth of the member,
15 times the nominal diameter of bar, or
1/20 of the clear span.

No more than 50% of the reinforcement shall be terminated at any section, and adjacent bars shall not be terminated in the same section.

Positive moment reinforcement (§5.11.1.2.2)

At least 1/3 the positive moment reinforcement in simple-span members, and 1/4 the positive moment reinforcement in continuous members, shall extend along the same face of the member beyond the centerline of the support. In beams, such extension shall not be less than 6 in.

Negative moment reinforcement (§5.11.1.2.3)

At least 1/3 of the total tension reinforcement provided for negative moment at a support shall have an embedment length length beyond the point of inflection (DL + LL) not less than:

the effective depth of the member, d
12.0 d_b, and
0.0625 times the clear span.

Moment resisting joints (§5.11.1.2.4)

In Seismic Zones 3 and 4, joint shall be detailed to resist moments and shears resulting from horizontal loads through the joint.

Q.E.D.

Design Criteria

Loading: HL-93

Concrete:

SIP Panel, $f'_{ci} := 4.0 \cdot ksi$

$f'_c := 5.0 \cdot ksi$ (f'ci + 1 ksi)

CIP slab, $f'_{cs} := 4 \cdot ksi$

Reinforcing Steel: (§5.4.3)

AASHTO M-31, Grade 60, $f_y := 60 \cdot ksi$ $E_s := 29000 \cdot ksi$

Prestressing Steel:

AASHTO M-203, uncoated 7 wire, low-relaxation strands (§5.4.4.1)

Nominal strand diameter, $d_b := 0.375 \cdot in$ $A_p := 0.085 \cdot in^2$

(Trends now are toward the use of 3/8 in. diameter strand, per PCI J., 33(2), pp.67-109)

$f_{pu} := 270 \cdot ksi$

$f_{py} := 0.90 \cdot f_{pu}$ $f_{py} = 243\,ksi$

$f_{pe} := 0.80 \cdot f_{py}$ $f_{pe} = 194.4\,ksi$ @ service limit state after all losses

(LRFD Table 5.9.3-1)

$E_p := 28500 \cdot ksi$

Design Method: LRFD

Mechanical shear ties on the top of panels are not required per PCI, special report, PCI J., 32(2), pp. 26-45.

Structure

Design span $L := 89.07 \cdot ft$

Roadway width $BW := 53.0 \cdot ft$ barrier face to barrier face

Girder spacing $S := 6.75 \cdot ft$

Skew angle $\theta := 14.65 \cdot deg$

no. of girder $N_b := 8$

curb width on deck, $cw := 10.5 \cdot in$

Deck overhang (CL. of exterior girder to end of deck) $overhang := \frac{BW - (N_b - 1) \cdot S}{2} + cw$ $overhang = 3.75\,ft$

slab design thickness $t_{s1} := 8.0 \cdot in$

for D.L. calculation $t_{s2} := 8.5 \cdot in$

Panel dimensions : $W_{sip} := 8.0 \cdot ft$ $L_{sip} := 6.34 \cdot ft$ $t_{sip} := 3.5 \cdot in$

CIP composite slab: $t_{cs1} := t_{s1} - t_{sip}$ $t_{cs1} = 4.5\,in$ (used for structural design)

$t_{cs2} := t_{s2} - t_{sip}$ $t_{cs2} = 5\,in$ (actual thickness)

$w_c := 0.160 \cdot kcf$

Future overlay (2" HMA), $w_{dw} := 0.140kcf \cdot 2in$ $w_{dw} = 0.023 \frac{kip}{ft^2}$

Minimum Depth and Cover (§9.7.1)

Min. Depth $if\left(t_{s2} \geq 7.0 \cdot in, "OK", "NG"\right) = "OK"$

Min. SIP thickness $if\left(0.55 \cdot t_{s2} > t_{sip} \geq 3.5 \cdot in, "OK", "NG"\right) = "OK"$

top cover for epoxy-coated main reinforcing steel = 1.5 in. (up to #11 bar)
= 2.0 in. (#14 & #18 bars) (§5.12.4 & Table 5.12.3-1)

bottom concrete cover (unprotected main reinforcing) = 1 in. (up to #11 bar)
= 2 in. (#14 & #18 bars)

sacrificial thickness = 0.5 in. (§2.5.2.4)

Optional deflection criteria for span-to-depth ratio (LRFD Table 2.5.2.6.3-1)

Min. Depth (continuous span) where $S = 6.75\,ft$ (slab span length):

$$if\left[\max\left(\left(\frac{S + 10 \cdot ft}{30}\right) \quad \left(0.54 \cdot ft\right)\right) \leq t_{s1}, "OK", "NG"\right] = "OK" \qquad \max\left(\left(\frac{S + 10 \cdot ft}{30}\right) \quad \left(0.54 \cdot ft\right)\right) = 6.7\,in$$

Skew Deck (§9.7.1.3)

$\theta \leq 25 \cdot deg = 1$ it true, the primary reinforcement may be placed in the direction of the skew; otherwise, it shall be placed perpendicular to the main supporting components.

Loads The precast SIP panels support their own weight, any construction loads, and the weight of the CIP slabs. For superimposed dead and live loads, the precast panels are analyzed assuming that they act compositely with the CIP concrete.

Dead load per foot

SIP panel $w_{sip} := t_{sip} \cdot w_c$ $w_{sip} = 0.047 \frac{kip}{ft^2}$

CIP slab $w_{cs} := t_{cs2} \cdot w_c$ $w_{cs} = 0.067 \frac{kip}{ft^2}$

Weight of one traffic barrier is $tb := 0.52 \cdot \frac{kip}{ft}$

Weight of one sidewalk is $tside := 0.52 \cdot \frac{kip}{ft}$

Wearing surface & construction loads

future wearing surface $w_{dw} = 0.023 \frac{kip}{ft^2}$

construction load (applied to deck panel only) $w_{con} := 0.050 \cdot \frac{kip}{ft}$ (§9.7.4.1)

Note that load factor for construction load is 1.5 (§3.4.2).

Live loads

(§3.6.1.3.3, not for empirical design method) Where deck is designed using the approximate strip method, specified in §4.6.2.1, the live load shall be taken as the wheel load of the 32.0 kip axle of the design truck, without lane load, where the strips are transverse.

$if(S \le 15 \cdot ft, "OK", "NG") = "OK"$ (§3.6.1.3.3)

Multiple presence factor: $M1 := 1.2$ $M2 := 1.0$ (§3.6.1.1.1.2)

Dynamic Load Allowance (impact) $IM := 0.33$ (§3.6.2.1)

Maximum factored moments **per unit width** based on Table A4-1: for $S = 6.75\ ft$

(include the effect of multiple presence factors and the dynamic load allowance)

applicability $if[min((0.625 \cdot S \quad 6 \cdot ft)) \ge overhang - cw, "OK", "NG"] = "OK"$

$if(N_b \ge 3, "OK", "NG") = "OK"$

$M_{LLp} := 5.10 \cdot \frac{kip \cdot ft}{ft}$

(§3.6.1.3.4) For deck overhang design with a cantilever, not exceeding 6.0 ft from the centerline of the exterior girder to the face of a continuous concrete railing, the wheel loads may be replaced with a uniformly distributed line load of 1.0 KLF intensity, located 1 ft from the face of the railing.

$if(overhang - cw \le 6 \cdot ft, "OK", "NG") = "OK"$

Load combination

Where traditional design based on flexure is used, the requirements for strength and service limit states shall be satisfied.
Extreme event limit state shall apply for the force effect transmitted from the bridge railing to bridge deck (§13.6.2).
Fatigue need not be investigated for concrete deck slabs in multi-girder applications (§5.5.3.1).

Strength Limit States

Load Modifier

$\eta_D := 1.00$ for conventional design (§1.3.3)

$\eta_R := 1.00$ for conventional level of redundancy (§1.3.4)

$\eta_I := 1.00$ for typical bridges (§1.3.5)

$\eta := \max\left(\begin{pmatrix} \eta_D \cdot \eta_R \cdot \eta_I \\ 0.95 \end{pmatrix}\right)$ $\eta = 1$ (§1.3.2)

Strength I load combination - normal vehicular load without wind (§3.4.1)

Load factors (LRFD Table 3.4.1-1&2):

$\gamma_{dc} := 1.25$ for component and attachments

$\gamma_{dw} := 1.50$ for DW

$\gamma_L := 1.75$ for LL

Section Properties

Non-composite section per foot

$A_{sip} := t_{sip} \cdot 12 \cdot in$ $A_{sip} = 42\,in^2$

$I_{sip} := \frac{12 \cdot in \cdot t_{sip}^3}{12}$ $I_{sip} = 42.875\,in^4$

$Y_{bp} := \frac{t_{sip}}{2}$ $Y_{bp} = 1.75\,in$

$Y_{tp} := t_{sip} - Y_{bp}$ $S_{tp} := \frac{I_{sip}}{Y_{tp}}$ $S_{bp} := \frac{I_{sip}}{Y_{bp}}$

$Y_{tp} = 1.75\,in$ $S_{tp} = 24.5\,in^3$ $S_{bp} = 24.5\,in^3$

$E_c := 33000 \cdot \left(\frac{w_c}{kcf}\right)^{1.5} \cdot \sqrt{\frac{f'_c}{ksi}} \cdot ksi$ $E_c = 4722.6\,ksi$ (§5.4.2.4)

$E_{ci} := 33000 \cdot \left(\frac{w_c}{kcf}\right)^{1.5} \cdot \sqrt{\frac{f'_{ci}}{ksi}} \cdot ksi$ $E_{ci} = 4224.0\,ksi$

Composite Section Properties (§4.6.2.6)

$E_{cs} := 33000 \cdot \left(\frac{w_c}{kcf}\right)^{1.5} \cdot \sqrt{\frac{f'_{cs}}{ksi}} \cdot ksi$ $E_{cs} = 4224.0\,ksi$ (§5.4.2.4)

modular ratio, $n := \sqrt{\frac{f'_c}{f'_{cs}}}$ $n = 1.118$

$b := 12 \cdot in$

$A_{slab} := \frac{b}{n} \cdot t_{cs1}$ $Y_{bs} := t_{sip} + \frac{t_{cs1}}{2}$ $AY_{bs} := A_{slab} \cdot Y_{bs}$

	Area	Y_b	$A \cdot Y_b$
CIP slab	$A_{slab} = 48.3\,in^2$	$Y_{bs} = 5.75\,in$	$A_{slab} \cdot Y_{bs} = 277.7\,in^3$
SIP panel	$A_{sip} = 42\,in^2$	$Y_{bp} = 1.75\,in$	$A_{sip} \cdot Y_{bp} = 73.5\,in^3$

$Y_b := \frac{A_{slab} \cdot Y_{bs} + A_{sip} \cdot Y_{bp}}{A_{slab} + A_{sip}}$ $Y_b = 3.89\,in$ @ bottom of panel

$Y_t := t_{sip} - Y_b$ $Y_t = -0.39\,in$ @ top of panel

$Y_{ts} := t_{sip} + t_{cs1} - Y_b$ $Y_{ts} = 4.11\,in$ @ top of slab

$I_{slabc} := A_{slab} \cdot \left(Y_{ts} - \frac{t_{cs1}}{2} \right)^2 + \frac{\left(\frac{b}{n} \right) \cdot t_{cs1}^3}{12}$ $I_{slabc} = 248.7\,in^4$

$I_{pc} := A_{sip} \cdot (Y_b - Y_{bp})^2 + I_{sip}$ $I_{pc} = 235.1\,in^4$

$I_c := I_{slabc} + I_{pc}$ $I_c = 483.8\,in^4$

Section modulous of the composite section

$S_b := \frac{I_c}{Y_b}$ $S_b = 124.4\,in^3$ @ bottom of panel

$S_t := \frac{I_c}{|Y_t|}$ $S_t = 1242.1\,in^3$ @ top of panel

$S_{ts} := n \cdot \frac{I_c}{Y_{ts}}$ $S_{ts} = 131.6\,in^3$ @ top of slab

Required Prestress

Assume the span length conservatively as the panel length, $L_{sip} = 6.34\ ft$

$M_{sip} := \frac{w_{sip} \cdot L_{sip}^2}{8}$ $M_{sip} = 0.234\,\frac{ft \cdot kip}{ft}$

$M_{cip} := \frac{w_{cs} \cdot L_{sip}^2}{8}$ $M_{cip} = 0.335\,\frac{ft \cdot kip}{ft}$

For the superimposed dead and live loads, the force effects should be calculated based on analyzing the strip as a continuous beam supported by infinitely rigid supports (§4.6.2.1.6)

$M_{DW} := 0.10 \cdot \frac{ft \cdot kip}{ft}$

$M_b := 0.19 \cdot \frac{kip \cdot ft}{ft}$ (see Strudl s-dl output)

$f_b := \frac{(M_{sip} + M_{cip})ft}{S_{bp}} + \frac{(M_{DW} + M_b + M_{LLp}) \cdot ft}{S_b}$ $f_b = 0.799\,ksi$

Tensile Stress Limits

$0.190 \cdot \sqrt{\frac{f'_c}{ksi}} \cdot ksi = 0.42\,ksi$ (§5.9.4.2.2)

$0 \cdot ksi$ WSDOT design practice

Required precompression stress at bottom fiber,

$f_{creq} := f_b - 0 \cdot ksi$ $f_{creq} = 0.799\,ksi$

If P_{se} is the total effective prestress force after all losses, and the center of gravity of stands is concentric with the center of gravity of the SIP panel:

$P_{se} := f_{creq} \cdot W_{sip} \cdot t_{sip}$ $P_{se} = 268.43\,kip$ per panel

Assume stress at transfer,

$f_{pi} := 0.75 \cdot f_{pu}$ $f_{pi} = 202.5\,ksi$ (LRFD Table 5.9.3-1)

Assume 15% final losses, the final effective prestress,

$p_{se} := f_{pi} \cdot (1 - 0.15)$ $p_{se} = 172.12\,ksi$

The required number of strands, $N_{req} := \frac{P_{se}}{p_{se} \cdot A_p}$ $N_{req} = 18.35$ $N_p := ceil(N_{req})$

Try $N_p := 19$

Prestress Losses

Loss of Prestress (§5.9.5)

$\Delta f_{pT} = \Delta f_{pES} + \Delta f_{pLT}$

where, Δf_{pLT} = long-term prestress loss due to creep of concrete, shrinkage of concrete, and relaxation of steel.

steel relaxation at transfer (Office Practice)

Curing time for concrete to attain f'ci is approximately 12 hours: set $t := 0.75$ day

$f_{pj} := 0.75 \cdot f_{pu}$ $f_{pj} = 202.5\,ksi$ immediately prior to transfer+steel relax.

(LRFD Table 5.9.3-1)

$$\Delta f_{pR0} := \frac{\log(24.0 \cdot t)}{40.0} \cdot \left(\frac{f_{pj}}{f_{py}} - 0.55 \right) \cdot f_{pj}$$

$\Delta f_{pR0} = 1.80\,ksi$

Given: $A_p = 0.085\,in^2$

straight strands $N_p = 19$ jacking force, $f_{pj} \cdot N_p \cdot A_p = 327.04\,kip$

(note: these forces include initial prestress relaxation loss, see §C5.9.5.4.4b)

$A_{ps} := A_p \cdot N_p$ $A_{ps} = 1.615\,in^2$ per panel

$A_{psip} := A_{ps} \cdot \frac{ft}{W_{sip}}$ $A_{psip} = 0.202\,in^2$ per ft

c.g. of all strands to c.g. of girder, $e_p := 0 \cdot in$

Elastic Shortening, Δf_{pES} ***(§5.9.5.2.3a)***

f_{cgp}: concrete stress at c.g. of prestressing tendons due to the prestressing force immediately after transfer and the self-weight of the member at the sections of maximum moment.

Guess values: $p_{si} := 194.4 \cdot ksi$ prestress tendon stress at transfer (LRFD Table 5.9.3-1)

Given $\left(f_{pj} - \Delta f_{pR0} - p_{si}\right) \cdot \frac{E_{ci}}{E_p} = -\frac{-\left(p_{si} \cdot A_{psip}\right)}{A_{sip}}$ (note: used only when $e_p = 0$ in)

$p_{si} := \text{Find}(p_{si})$ $p_{si} = 194.4\,ksi$

$f_{cgp} := \frac{-\left[p_{si} \cdot \left(A_{psip}\right)\right]}{A_{sip}}$ $f_{cgp} = -0.93\,ksi$

$\Delta f_{pES} := f_{pj} - \Delta f_{pR0} - p_{si}$ $\Delta f_{pES} = 6.3\,ksi$

Approximate Estimate of Time Dependent Losses (§5.9.5.3)

Criteria: Normal-weight concrete
Concrete is either steam or moist cured
Prestressing is by low relaxation strands
Are sited in average exposure condition and temperatures

$H := 75$ the average annual ambient relative humidity (%)

$\gamma_h := 1.7 - 0.01H$ $\gamma_h = 0.95$

$\gamma_{st} := \frac{5}{1 + \frac{f'_{ci}}{ksi}}$ $\gamma_{st} = 1$

$\Delta f_{pR} := 2.5ksi$ an estimate of relaxation loss for low relaxation strand

Then,

$\Delta f_{pLT} := 10.0 \frac{f_{pi} \cdot A_{psip}}{A_{sip}} \cdot \gamma_h \cdot \gamma_{st} + (12.0ksi)\gamma_h \cdot \gamma_{st} + \Delta f_{pR}$ $\Delta f_{pLT} = 23.1\ ksi$

Total loss Δf_{pT},

$\Delta f_{pT} := \Delta f_{pR0} + \Delta f_{pLT} + \Delta f_{pES}$ $\Delta f_{pT} = 31.25\ ksi$

$f_{pe} := f_{pj} - \Delta f_{pT}$ $f_{pe} = 171.25\ ksi$

$\text{if}\left(f_{pe} \le 0.80 \cdot f_{py}, \text{"OK"}, \text{"NG"}\right) = \text{"OK"}$ (LRFD Table 5.9.3-1)

$P_e := \frac{N_p \cdot A_p \cdot f_{pe}}{W_{sip}}$ $P_e = 34.57 \frac{kip}{ft}$ per foot

Stresses in the SIP Panel at Transfer

Stress Limits for Concrete

Compression: $-0.60 \cdot f'_{ci} = -2.4\ ksi$

Tension: Allowable tension with bonded reinforcement which is sufficient to resist 120% of the tension force in the cracked concrete computed on the basis of an uncracked section (§5.9.4.1.2).

$0.24 \cdot \sqrt{\frac{f'_{ci}}{ksi}} \cdot ksi = 0.48\ ksi$

or w/o bonded reinforcement,

$\min\left(\begin{pmatrix} 0.0948 \cdot \sqrt{\frac{f'_{ci}}{ksi}} \cdot ksi \\ 0.200 \cdot ksi \end{pmatrix}\right) = 0.19\ ksi$ (Controls)

Because the strand group is concentric with the precast concrete panel, the midspan section is the critical section that should be checked.

Stress at Midspan

Effective stress after transfer,

$$P_{si} := \frac{N_p \cdot A_p \cdot p_{si}}{W_{sip}} \qquad P_{si} = 39.244 \frac{kip}{ft}$$

Moment due to weight of the panel,

$$M_{sip} = 0.234 \frac{kip \cdot ft}{ft}$$

At top of the SIP panel,

$$\left(-\frac{M_{sip} \cdot ft}{S_{tp}} - \frac{P_{si} \cdot ft}{A_{sip}}\right) = -1.05\,ksi \qquad < \text{allowable} \quad -0.60 \cdot f'_{ci} = -2.4\,ksi \qquad \textbf{OK}$$

At bottom of the SIP panel,

$$\left(\frac{M_{sip} \cdot ft}{S_{bp}} - \frac{P_{si} \cdot ft}{A_{sip}}\right) = -0.82\,ksi \qquad < \text{allowable} \quad -0.60 \cdot f'_{ci} = -2.4\,ksi \qquad \textbf{OK}$$

Stresses in SIP Panel at Time of Casting Topping Slab

The total prestress after all losses,

$$P_e = 34.57 \frac{kip}{ft}$$

Stress Limits for Concrete

Flexural stresses due to unfactored construction loads shall not exceed 65% of the 28-day compressive strength for concrete in compression or the modulus of rupture in tension for prestressed concrete form panels (§9.7.4.1).

The construction load shall be taken to be less than the weight of the form and the concrete slab plus 0.050 KSF.

For load combination Service I:

Compression: $-0.65 \cdot f'_c = -3.25\,ksi$

Tension: Modulous of rupture,

$$f_r := 0.24 \cdot \sqrt{\frac{f'_c}{ksi}} \cdot ksi \qquad f_r = 0.54\,ksi$$

Stresses at Midspan after all Non-Composite Loads

$$M_{sip} = 0.23 \frac{ft \cdot kip}{ft}$$

$$M_{cip} = 0.33\,\frac{ft\cdot kip}{ft}$$

$$M_{const} := 0.050\cdot\frac{kip}{ft^2}\,\frac{L_{sip}^{\,2}}{8} \qquad M_{const} = 0.25\,\frac{ft\cdot kip}{ft}$$

At top of the SIP panel,

$$\left[-\frac{(M_{sip} + M_{cip} + M_{const})\cdot ft}{S_{tp}} - \frac{P_e\cdot ft}{A_{sip}}\right] = -1.23\,ksi \quad < \text{allowable} \quad -0.65\cdot f'_c = -3.25\,ksi \quad \textbf{OK}$$

At bottom of the SIP panel,

$$\left[\frac{(M_{sip} + M_{cip} + M_{const})\cdot ft}{S_{bp}} - \frac{P_e\cdot ft}{A_{sip}}\right] = -0.42\,ksi \quad < \text{allowable} \quad -0.65\cdot f'_c = -3.25\,ksi \quad \textbf{OK}$$

Elastic Deformation (§9.7.4.1)

Deformation due to

$$\Delta := \frac{5}{48}\cdot\frac{(M_{sip} + M_{cip})\cdot ft\cdot L_{sip}^{\,2}}{E_c\cdot I_{sip}} \qquad \Delta = 0.02\,in$$

$$\text{if}\left[\Delta \le \begin{cases} \min\left(\left(\frac{L_{sip}}{180}\ \ 0.25\cdot in\right)\right) & \text{if } L_{sip} \le 10\cdot ft \\ \min\left(\left(\frac{L_{sip}}{240}\ \ 0.75\cdot in\right)\right) & \text{otherwise} \end{cases}, \text{"OK"}, \text{"NG"}\right] = \text{"OK"}$$

Stresses in SIP Panel at Service Loads

Compression:

- Stresses due to permanent loads

  $-0.45\cdot f'_c = -2.25\,ksi$ for SIP panel

  $-0.45\cdot f'_{cs} = -1.8\,ksi$ for CIP panel

- Stresses due to permanent and transient loads

  $-0.60\cdot f'_c = -3\,ksi$ for SIP panel

  $-0.60\cdot f'_{cs} = -2.4\,ksi$ for CIP panel

- Stresses due to live load + one-half of the permanent loads

  $-0.40\cdot f'_c = -2\,ksi$ for SIP panel

  $-0.40\cdot f'_{cs} = -1.6\,ksi$ for CIP panel

Tension:

$$0.0948 \cdot \sqrt{\frac{f'_c}{ksi}} \cdot ksi = 0.21\,ksi \qquad (\S 5.9.4.2.2)$$

$0 \cdot ksi$ WSDOT design practice

Service Load Stresses at Midspan

- *Compressive stresses at top of CIP slab*

  Stresses due to permanent load + prestressing

$$-\frac{(M_{DW} + M_b) \cdot ft}{S_{ts}} = -0.026\,ksi \quad < \text{allowable} \quad -0.45 \cdot f'_{cs} = -1.8\,ksi \quad \textbf{OK}$$

  Stresses due to permanent and transient loads,

$$-\frac{(M_{DW} + M_b + M_{LLp}) \cdot ft}{S_{ts}} = -0.49\,ksi \quad < \text{allowable} \quad -0.60 \cdot f'_{cs} = -2.4\,ksi \quad \textbf{OK}$$

- *Compressive stresses at top of the SIP panel*

  Stresses due to permanent load + prestressing

$$-\frac{P_e \cdot ft}{A_{sip}} - \frac{(M_{sip} + M_{cip}) \cdot ft}{S_{tp}} - \frac{(M_{DW} + M_b) \cdot ft}{S_t} = -1.1\,ksi \quad < \text{allowable} \quad -0.45 \cdot f'_c = -2.25\,ksi \quad \textbf{OK}$$

  Stresses due to permanent and transient loads,

$$-\frac{P_e \cdot ft}{A_{sip}} - \frac{(M_{sip} + M_{cip}) \cdot ft}{S_{tp}} - \frac{(M_{DW} + M_b + M_{LLp}) \cdot ft}{S_t} = -1.15\,ksi \quad < \text{allowable} \quad -0.60 \cdot f'_c = -3\,ksi \quad \textbf{OK}$$

  Stresses due to live load + one-half the sum of effective prestress and permanent loads,

$$-0.5 \cdot \left(\frac{P_e \cdot ft}{A_{sip}}\right) - \frac{0.5 \cdot (M_{sip} + M_{cip}) \cdot ft}{S_{tp}} - \frac{(0.5 \cdot M_{DW} + 0.5 \cdot M_b + M_{LLp}) \cdot ft}{S_t} = -0.6\,ksi$$

$$< \text{allowable} \quad -0.40 \cdot f'_c = -2\,ksi \quad \textbf{OK}$$

- *Tensile stresses at bottom of the SIP panel*

  Stresses due to permanent and transient loads,

$$-\frac{P_e \cdot ft}{A_{sip}} + \frac{(M_{sip} + M_{cip}) \cdot ft}{S_{bp}} + \frac{(M_{DW} + M_b + M_{LLp}) \cdot ft}{S_b} = -0.02\,ksi$$

$$< \text{allowable} \quad 0.0948 \cdot \sqrt{\frac{f'_c}{ksi}} \cdot ksi = 0.21\,ksi \quad \textbf{OK}$$

$0 \cdot ksi$ (BDM)

Flexural Strength of Positive Moment Section

Resistance factors (§5.5.4.2.1)

$\phi_f := 0.90$ for flexure and tension of reinforced concrete

$\phi_p := 1.00$ for flexure and tension of prestressed concrete

$\phi_v := 0.90$ for shear and torsion

Ultimate Moment Required for Strength I

Dead load moment,

$M_{DC} := M_{sip} + M_{cip} + M_b$ $\quad M_{DC} = 0.76 \frac{kip \cdot ft}{ft}$

Wearing surface load moment,

$M_{DW} = 0.1 \frac{kip \cdot ft}{ft}$

Live load moment,

$M_{LLp} = 5.1 \frac{kip \cdot ft}{ft}$

$M_u := \eta \cdot (\gamma_{dc} \cdot M_{DC} + \gamma_{dw} \cdot M_{DW} + \gamma_L \cdot M_{LLp})$ $\quad M_u = 10.02 \frac{kip \cdot ft}{ft}$

Flexural Resistance (§5.7.3)

Find stress in prestressing steel at nominal flexural resistance, f_{ps} (§5.7.3.1.1)

$f_{pe} = 171.249\,ksi$ $\quad 0.5 \cdot f_{pu} = 135\,ksi$

$if(f_{pe} \geq 0.5 \cdot f_{pu}, "OK", "NG") = "OK"$

$k := 2 \cdot \left(1.04 - \frac{f_{py}}{f_{pu}}\right)$ $\quad k = 0.28$ (LRFD Eq. 5.7.3.1.1-2)

$A_s := 0 \cdot in^2$

$A'_s := 0 \cdot in^2$ (conservatively)

d_p, distance from extreme compression fiber to the centroid of the prestressing tendons,

$d_p := t_{s1} - 0.5 \cdot t_{sip}$ $\quad d_p = 6.25\,in$

$W_{sip} = 96\,in$ effective width of compression flange

$\beta_1 := if\left[f'_{cs} \leq 4 \cdot ksi, 0.85, 0.85 - 0.05 \cdot \left(\frac{f'_{cs} - 4.0 \cdot ksi}{1.0 \cdot ksi}\right)\right]$ $\quad \beta_1 := \begin{cases} \beta_1 & \text{if } \beta_1 \geq 0.65 \\ 0.65 & \text{otherwise} \end{cases}$

$\beta_1 = 0.85$ (§5.7.2.2)

Assume rectangular section,

$$c := \frac{A_{ps} \cdot f_{pu}}{0.85 \cdot f'_{cs} \cdot \beta_1 \cdot W_{sip} + k \cdot A_{ps} \cdot \frac{f_{pu}}{d_p}} \qquad c = 1.47\,in$$

Stress in prestressing steel at nominal flexural resistance, f_{ps} (§5.7.3.1.1),

$$f_{ps} := f_{pu} \cdot \left(1 - k \cdot \frac{c}{d_p}\right) \qquad f_{ps} = 252.24\,ksi$$

Check stress in prestressing steel according to available development length, l_d

Available development length at midspan of the SIP panel,

$$l_d := 0.5 \cdot L_{sip} \qquad l_d = 3.17\ ft$$

rearranging LRFD eq. 5.11.4.1-1

$$f_{psld} := \frac{l_d}{1.6 \cdot d_b} \cdot ksi + \frac{2}{3} \cdot f_{pe} \qquad f_{psld} = 177.57\,ksi \qquad \text{(may be too conservative)}$$

$$f_{ps} := \min\left(\left(f_{ps} \quad f_{psld}\right)\right) \qquad f_{ps} = 177.57\,ksi$$

Flexural Resistance (§5.7.3.2.2 & 5.7.3.2.2),

$$a := \beta_1 \cdot c \qquad a = 1.25\,in \qquad A_{ps} = 1.615\,in^2 \quad \text{per panel}$$

$$M_n := A_{ps} \cdot f_{ps} \cdot \left(d_p - \frac{a}{2}\right)$$

$$M_n = 134.4\,kip \cdot ft$$

$$M_r := \phi_p \cdot M_n \qquad M_r = 134.4\,kip \cdot ft \qquad \text{per panel}$$

$$M_r := \frac{M_r}{W_{sip}} \qquad M_r = 16.81\,\frac{kip \cdot ft}{ft} \qquad \text{per ft}$$

$$M_u \le M_r = 1 \qquad \textbf{OK} \qquad \text{where} \qquad M_u = 10.02\,\frac{kip \cdot ft}{ft}$$

Limits of Reinforcement

Minimum Reinforcement (§5.7.3.3.2)

Compressive stress in concrete due to effective prestress force (after all losses) at midspan

$$f_{peA} := \frac{P_e \cdot ft}{A_{sip}} \qquad f_{peA} = 0.82\,ksi \qquad \text{(compression)}$$

Non-composite dead load moment at section, M_{dnc},

$M_{dnc} := M_{cip} + M_{sip}$ $M_{dnc} = 0.57 \frac{kip \cdot ft}{ft}$

$f_r = 0.54\ ksi$ use SIP panel

$M_{cr} := (f_r + f_{peA}) \cdot \frac{S_b}{ft} - M_{dnc} \cdot \left(\frac{S_b}{S_{bp}} - 1 \right)$ $1.2 \cdot M_{cr} = 14.13 \frac{kip \cdot ft}{ft}$

$M_r \geq 1.2 \cdot M_{cr} = 1$ **OK** where $M_r = 16.81 \frac{kip \cdot ft}{ft}$

Negative Moment Section Over Interior Beams

Deck shall be subdivided into strips perpendicular to the supporting components (§4.6.2.1.1).
Continuous beam with span length as center to center of supporting elements (§4.6.2.1.6).
Wheel load may be modeled as concentrated load or load based on tire contact area.
Strips should be analyzed by classical beam theory.

Spacing in secondary direction (spacing between diaphragms):

$L_d := \frac{L}{1.0}$ $L_d = 89.07\ ft$

Spacing in primary direction (spacing between girders):

$S = 6.75\ ft$

Since $\frac{L_d}{S} \geq 1.50 = 1$, where $\frac{L_d}{S} = 13.2$ (§4.6.2.1.5)

therefore, all the wheel load shall be applied to primary strip. Otherwise, the wheels shall be distributed between intersecting strips based on the stiffness ratio of the strip to sum of the strip stiffnesses of intersecting strips.

Critical Section

The design section for negative moments and shear forces may be taken as follows:

Prestressed girder - shall be at 1/3 of flange width < 15 in.

Steel girder - 1/4 of flange width from the centerline of support.

Concrete box beams - at the face of the web.

top flange width $b_f := 15.06 \cdot in$

Design critical section for negative moment and shear shall be at d_c, (§4.6.2.1.6)

$d_c := \min\left(\left(\frac{1}{3} \cdot b_f \quad 15 \cdot in \right) \right)$ $d_c = 5\ in$ from CL of girder (may be too conservative, see training notes)

Maximum factored moments **per unit width** based on Table A4-1: for $S = 6.75\ ft$

(include multiple presence factors and the dynamic load allowance)

applicability $if[min((0.625 \cdot S \quad 6 \cdot ft)) \geq overhang - cw, "OK", "NG"] = "OK"$

$if(N_b \geq 3, "OK", "NG") = "OK"$

$M_{LLn} := 4.00 \cdot \frac{kip \cdot ft}{ft}$ (max. -M at d_c from CL of girder)

Dead load moment (STRUDL s-dl output)

$M_{DCn} := 0.18 \cdot \frac{kip \cdot ft}{ft}$ (dead load from deck overhang and sidl only, max. -M at d_c at interior girder, conservative) $\frac{d_c}{S} = 0.062$

$M_{DWn} := 0.10 \cdot \frac{kip \cdot ft}{ft}$

Service negative moment

$M_{sn} := M_{DCn} + M_{DWn} + M_{LLn}$ $M_{sn} = 4.28 \frac{kip \cdot ft}{ft}$

Factored negative moment

$M_{un} := \eta \cdot (\gamma_{dc} \cdot M_{DCn} + \gamma_{dw} \cdot M_{DWn} + \gamma_L \cdot M_{LLn})$ $M_{un} = 7.38 \frac{kip \cdot ft}{ft}$

Design of Section

Normal flexural resistance of a rectangular section may be determined by using equations for a flanged section in which case b_w shall be taken as b (§5.7.3.2.3).

$\beta_1 := if\left[f'_{cs} \leq 4 \cdot ksi, 0.85, 0.85 - 0.05 \cdot \left(\frac{f'_{cs} - 4.0 \cdot ksi}{1.0 \cdot ksi}\right)\right]$ $\beta_1 := \begin{cases} \beta_1 & \text{if } \beta_1 \geq 0.65 \\ 0.65 & \text{otherwise} \end{cases}$

$\beta_1 = 0.85$ (§5.7.2.2) conservatively use CIP slab concrete strength

assume bar # $bar_n := 5$

$$dia(bar) := \begin{cases} 0.5 \cdot in & \text{if } bar = 4 \\ 0.625 \cdot in & \text{if } bar = 5 \\ 0.75 \cdot in & \text{if } bar = 6 \\ 0.875 \cdot in & \text{if } bar = 7 \end{cases}$$

$d_n := t_{s2} - 2.5 \cdot in - \frac{dia(bar_n)}{2}$ $d_n = 5.69\ in$

$$A_s := \frac{0.85 \cdot f'_{cs} \cdot ft}{f_y} \cdot \left(d_n - \sqrt{d_n^2 - \frac{2 \cdot M_{un} \cdot ft}{0.85 \cdot \phi_f \cdot f'_{cs} \cdot ft}} \right) \qquad A_s = 0.3\,in^2 \qquad \text{per ft}$$

use (top-transverse) bar # $bar_n = 5$ $s_n := 9 \cdot in$

$$A_b(bar) := \begin{cases} 0.20 \cdot in^2 & \text{if } bar = 4 \\ 0.31 \cdot in^2 & \text{if } bar = 5 \\ 0.44 \cdot in^2 & \text{if } bar = 6 \\ 0.60 \cdot in^2 & \text{if } bar = 7 \end{cases}$$

$$A_{sn} := A_b(bar_n) \cdot \frac{1 \cdot ft}{s_n} \qquad A_{sn} = 0.41\,in^2 \qquad \text{per ft}$$

Maximum Reinforcement (§5.7.3.3.1)

The max. amount of prestressed and non-prestressed reinforcement shall be such that

where $d_e := d_n$

$$c := \frac{A_{sn} \cdot f_y}{0.85 \cdot \beta_1 \cdot f'_{cs} \cdot 1 \cdot ft} \qquad c = 0.72\,in$$

$$\text{if}\left(\frac{c}{d_e} \le 0.42, \text{"OK"}, \text{"NG"} \right) = \text{"OK"} \qquad \frac{c}{d_e} = 0.126$$

The section is not over-reinforced. Over-reinforced reinforced concrete sections shall not be permitted.

Minimum Reinforcement (§5.7.3.3.2)

$$f_{rs} := 0.24 \cdot \sqrt{\frac{f'_{cs}}{ksi}} \cdot ksi \qquad f_{rs} = 0.48\,ksi \qquad \text{use SIP panel concrete strength}$$

$$n := \frac{E_s}{E_{cs}} \qquad n = 6.866 \qquad n := \max([\,\text{ceil}((n - 0.495))\quad 6\,])$$

$n = 7$ set $n = 7$ (round to nearest integer, §5.7.1, not less than 6)

$$(n - 1)A_{sn} = 2.48\,in^2$$

$A_{gc} := t_{s2} \cdot ft$ $A_{gc} = 102\,in^2$

$d_s := 2.5in + 0.625 \cdot in + 0.5 \cdot 0.75 \cdot in$ c.g. of reinforcement to top of slab $d_s = 3.5\,in$

$$Y_{ts} := \frac{A_{gc} \cdot 0.5 \cdot t_{s2} + (n - 1) \cdot A_{sn} \cdot d_s}{A_{gc} + (n - 1) \cdot A_{sn}} \qquad Y_{ts} = 4.23\,in$$

$I_{cg} := \frac{ft \cdot t_{s2}^3}{12} + A_{gc} \cdot (0.5 \cdot t_{s2} - Y_{ts})^2 + (n-1) A_{sn} \cdot (Y_{ts} - d_s)^2 \qquad I_{cg} = 615.49\,in^4$

$M_{cr} := \frac{f_{rs} \cdot I_{cg}}{Y_{ts}} \qquad M_{cr} = 5.817\,kip \cdot ft \qquad 1.2 \cdot M_{cr} = 6.98\,kip \cdot ft$

$if(M_{un} \cdot ft \geq 1.2 \cdot M_{cr}, "OK", "NG") = "OK"$

Crack Control (§5.7.3.4)

$\gamma_e := 0.75$ for Class 2 exposure condition for deck (assumed)

$d_c := 2.0 \cdot in + 0.5 \cdot dia(bar_n) \qquad d_c = 2.31\,in$

$h := t_{s1} \qquad h = 8\,in$

$\beta_s := 1 + \frac{d_c}{0.7(h - d_c)} \qquad \beta_s = 1.581$

$M_{sn} = 4.28\,\frac{kip \cdot ft}{ft}$

$n := \frac{E_s}{E_{cs}} \qquad n = 6.866 \qquad n := ceil((n - 0.495))$ use slab concrete strength

set $n = 7$ (round to nearest integer, §5.7.1)

$\rho := \frac{A_{sn}}{ft \cdot d_n} \qquad \rho = 6.056 \times 10^{-3}$

$k(\rho) := \sqrt{(\rho \cdot n)^2 + 2 \cdot \rho \cdot n} - \rho \cdot n \qquad k(\rho) = 0.252$

$j(\rho) := 1 - \frac{k(\rho)}{3} \qquad j(\rho) = 0.916$

$f_{sa} := \frac{M_{sn} \cdot ft}{A_{sn} \cdot j(\rho) \cdot d_n} \qquad f_{sa} = 23.85\,ksi$

$if\left(s_n \leq \frac{700 \cdot \gamma_e \cdot in}{\beta_s \cdot \frac{f_{sa}}{ksi}} - 2 \cdot d_c, "OK", "NG"\right) = "OK"$ where $s_n = 9\,in$ $\qquad \frac{700 \cdot \gamma_e \cdot in}{\beta_s \cdot \frac{f_{sa}}{ksi}} - 2 \cdot d_c = 9.3\,in$

Shrinkage and Temperature Reinforcement (§5.10.8.2)

For components less than 48 in. thick,

where $A_g := t_{s2} \cdot 1 \cdot ft$

$$A_{tem} := 0.11 \cdot \frac{A_g \cdot ksi}{f_y} \qquad A_{tem} = 0.19\,in^2 \quad \text{per ft}$$

The spacing of this reinforcement shall not exceed $3 \cdot t_{s1} = 24\,in$ or 18 in.

top longitudinal - $bar := 4$ $s := 12 \cdot in$ $A_s := A_b(bar) \cdot \frac{1 \cdot ft}{s}$ $A_s = 0.2\,in^2$ per ft **OK**

Distribution of Reinforcement (§9.7.3.2)

The effective span length S_{eff} shall be taken as (§9.7.2.3):

web thickness $b_w := 7 \cdot in$

top flange width $b_f = 15.06\,in$

$$S_{eff} := S - b_f + \frac{b_f - b_w}{2} \qquad S_{eff} = 5.83\,ft$$

For primary reinforcement perpendicular to traffic:

$$percent := \min\left(\left(\frac{220}{\sqrt{\frac{S_{eff}}{ft}}} \quad 67\right)\right) \qquad percent = 67$$

Bottom longitudinal reinforcement (convert to equivalent mild reinforcement area):

$$A_s := \frac{percent}{100} \cdot \frac{A_{ps}}{W_{sip}} \cdot \frac{f_{py}}{f_y} \qquad A_s = 0.55\,\frac{in^2}{ft} \quad \text{per ft}$$

use bar # $bar := 5$ $s := 6.0 \cdot in$ $A_s := A_b(bar) \cdot \frac{1 \cdot ft}{s}$ $A_s = 0.62\,in^2$ per ft **OK**

Maximum bar spacing (§5.10.3.2)

Unless otherwise specified, the spacing of the primary reinforcement in walls and slabs shall not exceed 1.5 times the thickness of the member or 18 in.. The maximum spacing of temperature shrinkage reinforcement shall be as specified in §5.10.8.

$1.5 \cdot t_{s1} = 12\,in$ **OK**

Protective Coating (§5.12.4)

Epoxy coated reinforcement shall be used for slab top layer reinforcements except when the slab is overlayed with HMA.

W35DG Deck Bulb Tee, 48" Wide

Flexural Design Example, LRFD 2005

Units

$kip := 1000lb$

$ksi := \frac{kip}{in^2}$

$kcf := \frac{kip}{ft^3}$

1.0 Material Properties

Precast Concrete

$f_c := 8.0ksi$ $\rho := 0.160kcf$

$f_{ci} := 6.0ksi$ $\mu := 0.2$

$E_c := 33000ksi \cdot \left(\frac{\rho}{kcf}\right)^{\frac{3}{2}} \cdot \sqrt{\frac{f_c}{ksi}}$ $E_c = 5974\ ksi$

$E_{ci} := 33000ksi \cdot \left(\frac{\rho}{kcf}\right)^{\frac{3}{2}} \cdot \sqrt{\frac{f_{ci}}{ksi}}$ $E_{ci} = 5173\ ksi$

Rupture Modulus

$f_r := 0.24ksi \cdot \sqrt{\frac{f_c}{ksi}}$ $f_r = 0.679\ ksi$

Prestressing Steel (low-relaxation)

$f_{pu} := 270ksi$

$f_{py} := 243ksi$

$E_p := 28500ksi$

$A_{strand} := 0.217in^2$

$d_{strand} := 0.6in$

$n := \frac{E_p}{E_c}$

2.0 Geometric Properties

Span Length (bearing to bearing)

$L := 85ft$

Top flange width (i.e. girder spacing)

$b := 48in$ $t_s := 6in$

Section depth

$h := 35in$

Gross area (used for dead weight calculations)

$A_g := 669in^2$

Section Properties

$y_b := 20.9in$

$I_g := 100096in^4$

$I_p := 169341in^4$

$J := 29572in^4$

$S_b := \frac{I_g}{y_b}$ $S_b = 4789\,in^3$

$S_t := \frac{I_g}{(h - y_b)}$ $S_t = 7099\,in^3$

3.0 Permanent Loads

DC: Girder self-weight

$w_{dl} := A_g \cdot \rho$ $w_{dl} = 0.743 \frac{kip}{ft}$

DC: Diaphragms (at 1/3 points)

$P_{dia} := 8in \cdot (b - 6in) \cdot (h - 12in) \cdot \rho$ $P_{dia} = 0.716\,kip$

DC: Traffic Barriers (1/3 of F-shape)

$w_{sdl} := \frac{0.450}{3} \frac{kip}{ft}$ $w_{sdl} = 0.150 \frac{kip}{ft}$

DW:Overlay (3" ACP)

$w_{dw} := 3in \cdot b \cdot 0.140kcf$ $w_{dw} = 0.140 \frac{kip}{ft}$

4.0 Live Loads

HL-93 loading is travelling in 2 traffic lanes; for the maximum force effect taken at midspan:

$M_{HL} := \left(0.08 \cdot L^2 + 24 \cdot L \cdot ft - \frac{1120}{3} \cdot ft^2\right) \cdot \frac{kip}{ft}$ $M_{HL} = 2245\,kip \cdot ft$

this includes a 33% dynamic load allowance and a multiple presence factor of 1.0

Live Load Distribution Factor (design for interior beam):

Number of lanes

$N_L := 2$

From AASHTO Table 4.6.2.2.2b-1

$e_g := h - y_b - \frac{t_s}{2}$ $e_g = 11.100\,in$

$K_g := \left(I_g + A_g \cdot e_g^2\right)$ $K_g = 182523\,in^4$

The moment distribution factor is:

$g_{LL} := 0.075 + \left(\frac{b}{9.5ft}\right)^{0.6} \cdot \left(\frac{b}{L}\right)^{0.2} \cdot \left(\frac{K_g}{12L \cdot t_s^3}\right)^{0.1}$ $g_{LL} = 32.2\%$

5.0 Flexural Load Combinations

DC; Component load effects

$$M_{dl} := \frac{w_{dl}}{8} \cdot L^2 \qquad M_{dl} = 671\,kip \cdot ft$$

$$M_{sdl} := \frac{w_{sdl}}{8} \cdot L^2 + \frac{P_{dia}}{3} \cdot L \qquad M_{sdl} = 156\,kip \cdot ft$$

$$M_{DC} := M_{dl} + M_{sdl} \qquad M_{DC} = 827\,kip \cdot ft$$

Dead load moment at harping point (for stress at release)

$$M_{harp} := \frac{3 \cdot w_{dl} L^2}{25} \quad \textit{(at 0.4L point)} \qquad M_{harp} = 644\,kip \cdot ft$$

DW; Overlay load effects

$$M_{DW} := \frac{w_{dw}}{8} \cdot L^2 \qquad M_{DW} = 126\,kip \cdot ft$$

LL+I; Live load effects

$$M_{LL} := g_{LL} \cdot M_{HL} \qquad M_{LL} = 723\,kip \cdot ft$$

Conservatively, the design moment will be the maximum dead and live load moments at midspan

Service I

$$M_{serviceI} := M_{DC} + M_{DW} + M_{LL} \qquad M_{serviceI} = 1677\,kip \cdot ft$$

Service III

$$M_{serviceIII} := M_{DC} + M_{DW} + 0.8 \cdot M_{LL} \qquad M_{serviceIII} = 1532\,kip \cdot ft$$

Strength I

$$M_u := 1.25 \cdot M_{DC} + 1.5 \cdot M_{DW} + 1.75 M_{LL} \qquad M_u = 2489\,kip \cdot ft$$

6.0 Prestress Layout

Prestressed strand layout:

$N_{st} := 16$

$N_{harp} := 6$

$F_o := 9in$

$$F_{cl} := \begin{cases} (4.0in) & \text{if } N_{harp} \le 12 \\ \left[\frac{12 \cdot 4.0in + (N_{harp} - 12) \cdot 8.0in}{N_{harp}}\right] & \text{if } N_{harp} > 12 \end{cases} \qquad F_{cl} = 4.00\,in$$

$$E := \begin{cases} 2 \cdot in & \text{if } N_{st} \le 10 \\ \left[4 \cdot in \cdot \frac{(N_{st} - 5)}{N_{st}}\right] & \text{if } 10 < N_{st} \le 18 \\ \frac{(6 \cdot in \cdot N_{st} - 56 \cdot in)}{N_{st}} & \text{if } 18 < N_{st} \le 22 \\ \left[4 \cdot in \cdot \frac{(N_{st} - 3)}{N_{st}}\right] & \text{if } 22 < N_{st} \le 24 \\ \left[6 \cdot in \cdot \frac{(N_{st} - 10)}{N_{st}}\right] & \text{if } 24 < N_{st} \le 26 \end{cases} \qquad E = 2.75\,in$$

Distance to the prestressing steel C.G. measured from the bottom of the girder at midspan:

$A_{harp} := A_{strand} \cdot N_{harp}$

$A_{st} := A_{strand} \cdot N_{st}$

$A_{ps} := A_{st} + A_{harp}$

$N_{strand} := N_{harp} + N_{st}$ $\qquad A_{ps} = 4.774\,in^2$

$$y_{bps} := \frac{N_{harp} \cdot F_{cl} + N_{st} \cdot E}{N_{strand}} \qquad y_{bps} = 3.091\,in$$

Which gives a midspan strand eccentricity:

$e := y_b - y_{bps}$ $e = 17.8\,in$

The prestressing geometry at end of girder is:

Transfer Length

$l_t := 60 \cdot d_{strand}$ $l_t = 36.0\,in$

Self-weight moment at transfer point

$M_{lt} := w_{dl} \cdot \frac{l_t \cdot (L - l_t)}{2}$ $M_{lt} = 91\,kip \cdot ft$

Prestress offset of harped strands at bottom of girder end

$y_{bhend} := h - F_o$ $y_{bhend} = 26.0\,in$

Prestress offset at transfer point

Offset of harped strands from girder bottom

$y_{bhlt} := y_{bhend} - \frac{l_t}{0.4L} \cdot (y_{bhend} - F_{cl})$ $y_{bhlt} = 24.1\,in$

Offset of the C.G. of all strands from girder bottom

$y_{bslt} := \frac{y_{bhlt} \cdot N_{harp} + E \cdot N_{st}}{N_{strand}}$ $y_{bslt} = 8.6\,in$

Prestress eccentricity at transfer point

$e_{lt} := y_b - y_{bslt}$ $e_{lt} = 12.3\,in$

7.0 Prestress Force and Losses

Jacking PS force:

$f_{pi} := 0.75 \cdot f_{pu}$

$P_{jack} := A_{ps} \cdot f_{pi}$ $P_{jack} = 967\,kip$

Estimate of initial PS force after release, P_{sr}:

$P_{si} := 0.69 \cdot f_{pu} \cdot A_{ps}$ $P_{si} = 889\,kip$

Elastic Shortening Losses

$f_{cgp} := \left(\frac{P_{si}}{A_g}\right) + \left(P_{si} \cdot \frac{e^2}{I_g}\right) - \left(M_{dl} \cdot \frac{e}{I_g}\right)$ $f_{cgp} = 2.714\,ksi$

$\Delta f_{pES} := \left(\frac{E_p}{E_{ci}}\right) \cdot f_{cgp}$ $\Delta f_{pES} = 14.95\,ksi$

Steel Relaxation Losses (for low-relaxation strands)

$t := 1$ *(days before transfer)*

$\Delta f_R := \frac{\log(24 \cdot t)}{40} \cdot \left(\frac{f_{pi}}{f_{pu}} - 0.55\right) f_{pi}$ $\Delta f_R = 1.40\,ksi$

$\Delta f_{pinstant} := \Delta f_{pES} + \Delta f_R$ $\Delta f_{pinstant} = 16.4\,ksi$

Release PS force

$P_{sr} := \left(f_{pi} - \Delta f_{pinstant}\right) \cdot A_{ps}$ $\boxed{P_{sr} = 889\,kip}$

Time Dependent Losses (for low-relaxation strands)

$\Delta f_{td} := 33ksi \cdot \left[1 - 0.15 \cdot \frac{\left(f_c - 6ksi\right)}{6ksi}\right] + 6ksi - 8ksi$ $\Delta f_{td} = 29.35\,ksi$

Total prestress loss

$\Delta f_{total} := \Delta f_{pinstant} + \Delta f_{td}$ $\Delta f_{total} = 45.70\,ksi$

Effective PS force

$P_{se} := \left(f_{pi} - \Delta f_{total}\right) \cdot A_{ps}$ $\boxed{P_{se} = 749\,kip}$

8.0 Concrete Stresses at Release

Allowable stresses:

Compression:

$0.6 \cdot f_{ci} = 3.600\,ksi$

Tension:

$\max\left(-0.2ksi, -\sqrt{f_{ci} \cdot ksi}\right) = -0.200\,ksi$

Stress at transfer point:

$f_{tlt} := P_{sr} \cdot \left(\frac{1}{A_g} - \frac{e_{lt}}{S_t}\right) + \frac{M_{lt}}{S_t}$ $f_{tlt} = -0.06\,ksi$ **OK**

$$f_{blt} := P_{sr}\cdot\left(\frac{1}{A_g} + \frac{e_{lt}}{S_b}\right) - \frac{M_{lt}}{S_b} \qquad f_{blt} = 3.39\,ksi \qquad \textbf{OK}$$

Stress at harp point:

$$f_{tharp} := P_{sr}\cdot\left(\frac{1}{A_g} - \frac{e}{S_t}\right) + \frac{M_{harp}}{S_t} \qquad f_{tharp} = 0.19\,ksi \qquad \textbf{OK}$$

$$f_{bharp} := P_{sr}\cdot\left(\frac{1}{A_g} + \frac{e}{S_b}\right) - \frac{M_{harp}}{S_b} \qquad f_{bharp} = 3.02\,ksi \qquad \textbf{OK}$$

9.0 Concrete and Steel Stresses at Service

Allowable concrete stress at midpsan

Compression; Cases I, II, and III:

$0.45\cdot f_c = 3.600\,ksi$ *(Under total dead load)*

$0.4\cdot f_c = 3.200\,ksi$ *(Under half of permanent loads and full live load)*

$0.6\cdot f_c = 4.800\,ksi$ *(Under full Service I load)*

Tension (per BDM):

0ksi *(Tension check under Service III load)*

Concrete stress at midspan:

$$f_{tI} := P_{se}\cdot\left(\frac{1}{A_g} - \frac{e}{S_t}\right) + \frac{M_{DC} + M_{DW}}{S_t} \qquad f_{tI} = 0.85\,ksi \qquad \textbf{OK}$$

$$f_{tII} := \frac{1}{2}\cdot\left[P_{se}\cdot\left(\frac{1}{A_g} - \frac{e}{S_t}\right) + \left(\frac{M_{DC} + M_{DW}}{S_t}\right)\right] + \frac{M_{LL}}{S_t} \qquad f_{tII} = 1.65\,ksi \qquad \textbf{OK}$$

$$f_{tIII} := P_{se}\cdot\left(\frac{1}{A_g} - \frac{e}{S_t}\right) + \frac{M_{serviceI}}{S_t} \qquad f_{tIII} = 2.08\,ksi \qquad \textbf{OK}$$

$$f_b := P_{se}\cdot\left(\frac{e}{S_b} + \frac{1}{A_g}\right) - \left(\frac{M_{serviceIII}}{S_b}\right) \qquad f_b = 0.06\,ksi \qquad \textbf{OK}$$

Steel stress at service

Allowable steel stress; AASHTO LRFD 5.9.3:

$$0.8\cdot f_{py} = 194\,ksi$$

$$\Delta f_{ps} := n\cdot\left(\frac{e}{y_b}\right)\cdot\frac{\left(M_{sdl} + M_{DW} + M_{LL}\right)}{S_b} \qquad \Delta f_{ps} = 10.2\,ksi$$

$$f_{psservice} := f_{pi} - \Delta f_{total} + \Delta f_{ps} \qquad \boxed{f_{psservice} = 167\,ksi} \qquad \textbf{OK}$$

10.0 Flexural Strength Check

As calculated above, the factored load is:

$$M_u = 2489\,kip\cdot ft$$

Bonded Steel Stress

$\beta_1 := 0.65$ $k := 0.28$

$$c_{rec} := \frac{\left(A_{ps}\cdot f_{pu}\right)}{0.85\cdot\beta_1\cdot f_c\cdot b + k\cdot A_{ps}\cdot\frac{f_{pu}}{\left(h - y_{bps}\right)}} \qquad c_{rec} = 5.768\,in$$

$$c_{flange} := \frac{A_{ps}\cdot f_{pu} - 0.85\cdot\beta_1\cdot f_c\cdot(b - 6in)\cdot t_s}{0.85\cdot\beta_1\cdot f_c\cdot 6in + k\cdot A_{ps}\cdot\frac{f_{pu}}{\left(h - y_{bps}\right)}} \qquad c_{flange} = 4.630\,in$$

$$c := \begin{cases} c_{rec} & \text{if } c_{rec} \le t_s \\ c_{flange} & \text{otherwise} \end{cases} \qquad a := \beta_1\cdot c$$

$$f_{ps} := f_{pu}\cdot\left[1 - k\cdot\frac{c}{\left(h - y_{bps}\right)}\right] \qquad f_{ps} = 256.3\,ksi$$

Moment capacity at midspan

$\phi := 1.0$

$$\phi M_n := \begin{cases} \phi\cdot A_{ps}\cdot f_{ps}\cdot\left(h - y_{bps} - \frac{a}{2}\right) & \text{if } c_{rec} \le 6in \\ \phi\cdot\left[A_{ps}\cdot f_{ps}\cdot\left(h - y_{bps} - \frac{a}{2}\right) + 0.85\cdot\beta_1\cdot f_c\cdot(b - 6\cdot in)\cdot 6\cdot in\cdot\left(\frac{a}{2} - \frac{6in}{2}\right)\right] & \text{otherwise} \end{cases}$$

3063 kip·ft

OK

11.0 Reinforcement Limits

Maximum RF

$$\frac{c}{\left(h - y_{bps}\right)} = 0.181$$

0.42 maxmimum **(LRFD 5.7.3.3.1-1)** **OK**

Mimumum RF

$$f_{cpe} := P_{se}\cdot\left(\frac{1}{A_g} + \frac{e}{S_b}\right) \qquad f_{cpe} = 3.902\,ksi$$

$$M_{cr} := S_b\cdot\left(f_{cpe} + f_r\right) \qquad M_{cr} = 1828\,kip\cdot ft$$

ϕM_n must be greater than the lesser of 1.2 M_{cr} and 1.33 M_u ***(LRFD 5.7.3.3.2)***

$1.2M_{cr} = 2194\,kip\cdot ft$

$1.33\cdot M_u = 3311\,kip\cdot ft$

$\phi M_n = 3063\,kip\cdot ft$ **OK**

12.0 Camber and Deflection

Self-Weight Effect:

$$\Delta_{dc} := -\frac{5 \cdot w_{dl} \cdot L^4}{384 \cdot E_{ci} \cdot I_g} \qquad \Delta_{dc} = -1.686\,in$$

Prestress Effect:

$$a_c := 0.4 \cdot L$$

$$e_h := e - \left[y_b - \left(\frac{y_{bhend} \cdot N_{harp} + E \cdot N_{st}}{N_{strand}} \right) \right]$$

$$\Delta_{ps} := \frac{P_{sr}}{E_{ci} \cdot I_g} \cdot \left[\frac{e \cdot L^2}{8} - \frac{e_h \cdot (a_c)^2}{6} \right] \qquad \Delta_{ps} = 3.689\,in$$

Superimposed Loads

$$\Delta_{sdl} := \frac{-5 \cdot (w_{sdl} + w_{dw}) \cdot L^4}{384 \cdot E_c \cdot I_g} - \frac{23 P_{dia} \cdot L^3}{648 \cdot E_c \cdot I_g} \qquad \Delta_{sdl} = -0.615\,in$$

Long-term deflections from BDM multiplier method (Table 5-20):

Camber at Transfer

$$C_i := \Delta_{ps} + \Delta_{dc} \qquad C_i = 2.00\,in$$

Camber at 2000 days

$$C_{final} := 2.50 \cdot \Delta_{dc} + 2.25 \cdot \Delta_{ps} \qquad C_{final} = 4.09\,in$$

Deflection from barrier and overlay

$$C_{sidl} := 2.75 \cdot \Delta_{sdl} \qquad C_{sidl} = -1.69\,in$$

Final Camber

$$C_{fsidl} := C_{final} + C_{sidl} \qquad C_{fsidl} = 2.39\,in$$

Prestressed Voided Slab with Cast-in-Place Topping

General Input								Specification Reference
		AASHTO LRFD Specifications						
Girder type:	18	Prestressed Precast Flat Slab						Prelim.Plan, Sh 1
Span Length:	L =	58.00	ft	C.L. to C.L. Bearing				BDM 5.6.2-A
Girder Length:	L_g =	58.83	ft	End to End				BDM fig. 5-A-XX
Bridge Width:	W =	42.75	ft	Deck Width				Prelim.Plan, Sh 1
Number of Lanes		2						"
Skew Angle:	q_{skew} =	0.00	degrees					"
Girder Section Properties								
Girder Width:	b =	4.00	ft	=	48.00	in		BDM fig. 5-A-XX
Girder Depth:	d =	18.00	in	=	1.50	ft		"
Height	h =	23.00	in					
Top Flange Thickness	t_{tf} =	4.50	in	(from top of void to bottom of slab).				"
Bottom Flange Thickness	t_{bf} =	4.50	in	(from bottom of void to bottom of girder).				"
	$h_f = t_d + t_{tf}$ =	9.50						
Width of each Void	b_{eachV} =	9.00	in					"
Net Width of Girder	bw =	21.00	in	A_{actual} =	5.25	in^2		
Number of Voids	N_v =	3		A_{design} =	5.50	in^2		"
Area of Each Void	$A_{each\ v}$ =	63.62	in^2					"
Void Area:	A_v =	190.85	in^2	Void Perimeter each=	28.27	in		"
Area of Girder	A_g =	673.15	in^2					"
Area of Deck + Leg	A_d =	240.00	in^2					
Area of Comp. Sect.	A_{comp} =	913.15	in^2					
Number of girders	N_g =	10	W/b =	10.69				Prelim.Plan, Sh 2
Wt of barrier	w_{TB} =	0.50	k/ft					
Thickness of deck	t_d =	5.00	in					
Wt of Concrete	w_c=	0.155	kcp	for calculating E_c				BDM 5.1.1-D
Wt of Concrete	w_{cd} =	0.160	kcp	for dead load calculations				BDM 3.1.1
Strength of Concrete								
Deck	f_c' =	4.0	ksi					BDM 5.1.1-A.1
Final	f_c' =	8.5	ksi	Transfer	f_{ci}' =	7.0	ksi	BDM 5.1.1-A.2
*Modulus of Elasticity (girder),	$E_c = 33000 w_c^{1.5} \sqrt{f_c'}$ =	5871.1	ksi					
*Modulus of Elasticity (deck),	$E_c = 33000 w_c^{1.5} \sqrt{f_c'}$ =	4027.6	ksi					BDM 5.1.1-D LRFD 5.4.2.4-1
*Modulus of Elasticity (transfer),	$E_{ci} = 33000 w_c^{1.5} \sqrt{f_{ci}'}$ =	5328.0						
	nc =	1.46	ratio for transformed section					LRFD 5.7.1
Modulus of Rupture,	$f_r = 0.24 \sqrt{f_c'}$ =	0.700	ksi					LRFD 5.4.2.6
Modulus of Rupture to calculate min. reinforcement,	$f_{rMcr\ min} = 0.37 \sqrt{f_c'}$ =	1.08	ksi					"
Poisson's ratio =		m =	0.2					LRFD 5.4.2.5

						Reference
Reinforcing Steel - deformed bars						LRFD 5.4.3
Yield strength	f'_y =	60.00	ksi			BDM 5.1.2
Elastic modulus	E_s =	29000.00	ksi			LRFD 5.4.3.2
Prestressing Input						
Strand diam.	d_b =	0.60	in	Area =	0.217 in^2	BDM 5.1.3-A
Ultimate Strength	f_{pu} =	270.00	ksi			LRFD Table 5.4.4.1-1
Yield Strength	f_{py} = .9 f_{pu} =	243.00	ksi			"
Prior to Transfer	f_{pbt} = 0.75 f_{pu} =	202.50	ksi			LRFD Table 5.9.3-1
Effective Stress Limit	f_{pe} = 0.8 f_{py} =	194.40	ksi			"
Modulus of elasticity,	E_p =	28500	ksi.			LRFD 5.4.4.2
Number of Bonded Strands ~2 in from Bottom		14				BDM fig. 5-A-XX
Number of Bonded Strands ~4 in from Bottom		6		Eccentricity (E)		"
Number of Bonded Strands ~6 in from Bottom		0		**E =**	**4.71** **in**	"
Number of Debonded Strands ~2 in from Bottom		4		**OK**	**OK**	"
Number of Debonded Strands ~4 in from Bottom		0		**OK**		"
Total Number of Bottom Strands		24		≤	50	**OK**
Total Number of Top Strands		4		≤	6	**OK**
Eccentricities of Prestress Strands						
C. G. of bottom strands to bottom of girder =				2.50	in.	BDM fig. 5-A-XX
C. G. of top strands to bottom of girder =				15.00	in.	"
C. G. of bonded bottom strands to C.G. of girder,	e_{bb} =			6.40	in.	"
C. G. of debonded strands to C.G. of girder,	e_{db} =			7.00	in.	"
C. G. of all bottom strands to C.G. of girder,	e_b =			6.50	in.	"
C. G. of top strands to C.G. of girder,	e_t =			6.00	in.	"
E = C. G. of all strands to C.G. of girder =				**4.71**	**in.**	

Output

HS20-44 Force Effect:	**Jacking Force, P_j =**	**1230.4**	**kips**	
Live Load Force Effect:	Moment =	1294.23	ft-kips per lane	See Section 7
	Reaction =	95.69	kips per lane	"

Service Limit State

Concrete Stresses at Transfer		**Top of Girder**		**Bottom of Girder**		**Check**
	Load Case	Calculated	Allowable	Calculated	Allowable	
At d_v	DL+P/S	0.099	0.503	-3.021	-4.200	**OK**
At mid-span	DL+P/S	-1.031	0.503	-2.378	-4.200	**OK**
Concrete Stresses at const.	Load Case	Calculated	Allowable	Calculated	Allowable	
At mid-span	DL+P/S	-1.639	0.503	-1.463	-4.200	**OK**
Concrete Stresses at Service		**Limit State I**		**Limit State III**		
At mid-span	DL+LL+P/S	-2.430	-5.100	-2.584	0.000	**OK**
		-	-	-0.146	0.000	**OK**
	DL+P/S	-1.639	-3.825	-	-	**OK**
	LL+1/2DL+1/2P/S	-1.556	-3.400	-	-	**OK**

Strength Limit State

Moment at Mid-span, ft-kips	Mu =	1386	f Mn =	1856.9	**OK**

Table of Contents

Content

1 Structure:
Single Span Bridge
2 Live load
HL-93
3 Material Properties
Concrete
4 Allowable Concrete Stresses at Service Limit State
Tensile stress limit
Compressive stress limits after all losses
5 Computation of Section Properties
Girder and Composite Section Properties (Table 5-1)
Transformed Section Properties (Table 5-2)
6 Limit State
Service limit state
Load combinations and load factors
7 Vehicular Live Load
Design vehicular live load
Maximum live load force effect
Dynamic load allowance (Impact, IM)
Distribution of Live Load, Dfi (Beam Slab Bridges)
Shear Distribution Factor
Table 7-2: Summary of Live Load Distribution Factors:
Table 7-3: Distributed Live Loads
8 Computation of Stresses
Stresses Due to Weight of Girder (Table 8-1 thru 8-5)
Concrete Stresses Due to Traffic Barrier (Table 8-6 thru 8-8)
Concrete Stresses Due to Concrete Deck and Legs (Table 8-9 thru 8-11)
Concrete Stresses Due to LL+IM (Composite Section) (Table 8-12)
Summary of Stresses at dv (Table 8-13)
Summary of Stresses at Mid-Span (Table 8-14)
9 Approximate Evaluation of Pre-Stress Losses
Time Dependent Losses
Loss due to Strand Relaxation
Loss due to elastic shortening
10 Stresses at Service Limit State
Stresses After Elastic Shortening and Relaxation (Table 10-1)
Stresses After Losses (Noncomposite) (Table 10-2)
Summary of Stresses at Service Limit State (Table 10-3)
Tensile Stress Limit in Areas Without Bonded Reinforcement (at dv)
Compressive Stress Limit at Service - I Load Combination
Tensile Stress Limit at Service - III Load Combination
Stresses at transfer

11 Strength Limit State

Resistance factors

Flexural forces **NG Mu No Check**

Flexural resistance **OK for rectangular section**

Nominal flexural resistance

Minimum reinforcement

Development of prestressing strand **OK developed**

12 Shear Design

Design procedure

Effective Web Width, bv, and Effective Shear Depth, dv

Component of Prestressing Force in Direction of Shear Force, Vp

Shear Stress Ratio

Factored shear force

fpo

Factored moment

Longitudinal Strain (Flexural Tension)

Determination of **b** **and** **q**

Shear strength

Required shear strength

Maximum spacing of shear reinforcement

Minimum shear reinforcement **OK for Min. Transverse Reinf.**

Longitudinal reinforcement **OK for Longitudinal Reinforcement**

13 Deflection and Camber

Deflection due to prestressing forces at Transfer

Deflection due to weight of Girder

Deflection due to weight of Traffic Barrier TB

Deflection due to weight of Deck and Legs

Deflection (Camber) at transfer, Ci

Creep Coefficients (Table 13-1)

Final Deflection Due to All Loads and Creep **OK for deflection**

Time Verses Deflection Curve (fig. 13-1)

References

Prestressed Voided Slab Design
AASHTO LRFD Specifications

Specification Reference

1 Structure: Project XL2526, Name Br #539/858E

Single Span Bridge

Span Length:	58.00	ft	C.L. / C.L. Bearing /	Prelim Plan, Sh 1
Girder Length:	58.83	ft		
Bridge Width:	42.75	ft	Deck between curbs &/or barriers	"
Girder Width:	4.00	ft		BDM fig. 5-A-XX
Number of girders:	10			Prelim Plan, Sh 1

2 Live load

BDM 3.1.2-A
LRFD 3.6.1

HL-93

Vehicular live load designated as " HL-93 " shall consist of a combination of : LRFD 3.6.1.2.1

Design truck or design tandem, plus

Design lane load

Design truck is equivalent to AASHTO HS20-44 truck. LRFD 3.6.1.2.2

The design lane shall consist of a 0.64 klf, uniformly distributed in the longitudinal direction. Design lane load shall be assumed to be uniformly distributed over 10 ft width in the transverse direction. LRFD 3.6.1.2.4

Design tandem shall consist of a pair of 25.0 kip axles spaced at 4'-0" apart LRFD 3.6.1.2.3

Number of design lanes: LRFD 3.6.1.1.1

Integer part of : Width / (12 ft lane) = 3 Lanes

and 2 lanes if width is 20-24ft.

3 Material Properties

Concrete

LRFD Specifications allows a concrete compressive strength with a range of 2.4 to 10.0 ksi at 28 days. Compressive strength for prestressed concrete and decks shall not be less than 4.0 ksi. LRFD 5.4.2.1

4 Allowable Concrete Stresses at Service Limit State

LRFD 5.9.4

Tensile stress limit

LRFD 5.9.4.2.2

For service loads which involve traffic loading, tensile stress in members with bonded or unbonded prestressing strands shall be investigated using Service - III load combination.

Tension in other than precompressed tensile zone assuming uncracked section:

$f_t = 0.19\sqrt{f'_{ci}}$ Transfer & Lifting BDM 5.2.3-B

$f_t = 0.19\sqrt{f'_c}$ Shipping "

Tension in precompressed tensile zone:

f_t = 0.00 ksi "

Compressive stress limits after all losses

Compression shall be investigated using Service - I load combination: LRFD 5.9.4.2

$f_c = 0.45\ f'_c$	Due to permanent loads	BDM 5.2.3-B
$f_c = 0.60\ f'_c$	To all load combinations	"
$f_c = 0.40\ f'_c$	Due to transient loads and one-half of permanent loads	"

5 Computation of Section Properties

Girder and Composite Section Properties

Table 5-1: Moment of Inertia, I

	Area (in^2)	Y_b (in)	Ix` (in^4)	d (in)	Ad^2 (in^4)	Ix (in^4)
Girder	673.15	9.00	22021.6	3.0	6149.6	28171.2
Legs	0.00	0.00	0.0	0.0	0.0	0.0
Deck	240.00	20.50	500.0	-8.5	17248.3	17748.3
Composite	913.1	12.02	-	-	-	45919.5

Ybg = 9.00 in Ytg = 9.0 in

Ybc = 12.02 in Ytgc = 6.0 in

Ytsc = 11.0 in

Torsional Moment of Inertia

J = 55820 in^4 LRFD C4.6.2.2.1-3

Section Modulus:

Girder

(Bottom) $S_b = \frac{I_g}{y_{bg}} =$ 2446.8 in^3

(Top) $S_t = \frac{I_g}{y_{tg}} =$ 2446.8 in^3

Composite

(Bottom) $S_b = \frac{I_{comp}}{y_{bc}} =$ 3819.5 in^3

(Top girder) $S_t = \frac{I_{comp}}{y_{tgc}} =$ 7682.1 in^3

(Top slab) $S_t = \frac{I_{comp}}{y_{tsc}} =$ 4183.06 in^3

Transformed section properties

Deck

b_e = b/nc = 32.93 in

Legs

A_{lege} = 0.00 in^2

Y_{blege} = 0.00 in

I_{xlege} = 0.0 in^4

Table 5-2: Moment of Inertia Transformed section, I

	Area (in^2)	Y_b (in)	Ix` (in^4)	d (in)	Ad^2 (in^4)	Ix (in^4)
Girder	673.15	9.00	22021.6	2.3	3438.0	25459.6
Legs	0.00	0.00	0.0	0.0	0.0	0.0
Deck	164.64	20.50	500.0	-9.2	14056.6	14556.6
Composite	837.8	11.26	-	-	-	40016.2

Ybgt = 9.00 in Ytgt = 9.0 in
Ybct = 11.26 in Ytgct = 6.7 in
Ytsct = 11.7 in

Composite (Bottom) $S_{bt} = \frac{I_{compt}}{y_{bct}} =$ 3553.9 in^3
(Top girder) $S_{ttg} = \frac{I_{compt}}{y_{tgct}} =$ 5937.1 in^3
(Top slab) $S_{tts} = \frac{I_{compt}}{y_{tsct}} =$ 3408.52 in^3

6 Limit State

Each component and connection shall satisfy the following equation for each limit state :

LRFD Eqn. 1.3.2.1-1

$$\sum \eta_i \gamma_i Q_i \le \phi R_n = R_r$$

Where:

Load Modifier for Ductility, Redı for loads which a max. value of g_i is appropriate

h_i = $\eta_i \eta_R \eta_I \ge 0.95$ LRFD 1.3.2.1-2

h_i = $\frac{1}{\eta_D \eta_R \eta_I} \le 1.00$ for loads which a min. value of g_i is appropriate LRFD 1.3.2.1-3

h_D = Ductility factor LRFD 1.3.3
h_R = Redundancy factor LRFD 1.3.4
h_I = Operational Importance factor LRFD 1.3.5
h_i = 1.00 for any ordinary structure

Therefore the Limit State Equation simplifies to:

$$\sum \gamma_i Q_i \le \phi R_n = R_r$$

Where:

g_i = Load Factor, statistically based multiplier applied to force effects LRFD 1.3.2.1
Q_i = Force Effect (Moment or Shear) "
f = Resistance Factor "
R_n = Nominal Resistance "
R_r = Factored Resistance "

Service limit state

Service limit state shall be taken as restriction on stress, deformation and crack width under regular service conditions. LRFD 1.3.2.2

Load combinations and load factors

The Total Factored Force Effect shall be taken as:

$$Q = \sum \gamma_i Q_i$$ LFRD 3.4.1-1

Where:

g_i = Load Factors specified in Tables 1 & 2

Q_i = Force Effects from loads specified in LRFD

Strength-I load combination relating to the normal vehicle use of the bridge without wind. LRFD 3.4.1

Service-I load combination relating to the normal operational use of the bridge. "

Service-III load combination relating only to tension in prestressed concrete structures with the objective of crack control. "

$$Q_{Strength-I} = \gamma_{DC} DC + \gamma_{DW} DW + 1.75(LL + IM)$$ LRFD Tables 3.4.1-1 & 2

$Q_{Service-I}$ = 1.0 (DC + DW) + 1.0 (LL + IM) "

$Q_{Service-III}$ = 1.0 (DC + DW) + 0.8 (LL + IM) "

Effects due to shrinkage and creep are not considered. BDM 5.6.2

7 Vehicular Live Load LRFD 3.6.1.2

Design vehicular live load LRFD 3.6.1.2.1

Design live load designated as HL-93 shall be taken as:

LL = [Truck or tandem] (1 + IM) + Lane

Single Span Length =		58.00	ft		
HS-20 Truck Axles	32.00	32.00	8.00	kips	LRFD 3.6.1.2.2
HS-20 Truck Axle Spacing		14.00	14.00	ft	"
Tandem Truck Axles	25.00	25.00	kips		LRFD 3.6.1.2.3
Tandem Truck Axle Spacing		4.00	ft		"
Lane load density, w_L	0.64	k/ft			LRFD 3.6.1.2.4

Maximum live load force effect LRFD5.8.2.9

Max Shear, V_{max}, occurs at the horizontal distance of d_v from the face of support where d_v is the effective depth between the tensile and compressive resultant forces in the member and is ≥ **Max [.72 h or .9de].** LRFD5.8.3.2, & BDM 5.2.4-6

Max Moment, Mmax, occurs near midspan (CL) underneath the nearest concentrated load (P1) when that load is the same distance to midspan as the center of gravity (+ CG) is to midspan. Use the Truck or Tandem (Near Midspan) and the Lane (At Midspan) maximum moments together to be conservative.

So the	**HL-93 Live Load, LL = HS-20 Truck(1+IM)+Lane Load Governs**					
Near Center line						
Mmax =	**770.759**	**ft-kips**	**Corresponding V@Mmax =**	**25.10**	**kips**	
At dv						
Vmax =	**58.67**	**kips**	**Corresponding M@Vmax =**	**82.35**	**ft-kips**	LRFD 5.8.3.2
Lane Loading						
M@dv =	**25.4199**	**ft-kips**	**Corresponding V@dv =**	**17.66**	**kips**	
M@CL	**269.12**	**ft-kips**	**Corresponding V@CL =**	**0.00**	**Kips**	

Dynamic load allowance (Impact, IM)

LRFD 3.6.2.1

The static effect of Design Truck LL shall be increased by the following percentage : IM = 33% For bridge components (girder) LRFD Table 3.6.2.1-1

	At dv	3'	6'	9'	At CL	
M(LL+IM)=	134.9	279.0	522.5	730.5	1294.2	k-ft
V(LL+IM)=	95.7	92.0	85.2	78.3	32.5	**kips**

Distribution of Live Load, Df_i (Beam Slab Bridges)

LRFD 4.6.2.2

For Multibeam deck bridges with conditions as follows, the approximate method of live load distribution applies with the following conditions :

Width of deck is constant	LRFD 4.6.2.2.1
Number of Beams,	"
Beams are parallel $N_b \geq 4$	"
Beams have approximately the same stiffness	"
Roadway overhang, $d_e \leq 3.0\,ft$	"
Curvature in plane is less than 12 degree	"
X-section is one consistent with one listed in LRFD Table 4.6.2.2.1-1	"

The multiple presence factor shall not be applied in conjunction with approximate load distribution except for exterior beams. LRFD 3.6.1.1.2

The typical x-section **g** applies to voided and solid slabs w P.T. the composite deck makes the section significantly connected to act as a unit. LRFD Table 4.6.2.2.1-1

Distribution Factor for Moment Interior Girder, DF_{MInt}

LRFD 4.6.2.2.2b

For Multibeam deck bridges within the range of applicability and conditions as follows, the approximate method of live load distribution applies :

Range of applicability:	Width of beam (b),	$35 \leq$	48	≤ 60 in
	Span length (L),	$20 \leq$	58.00	≤ 120 ft
	Number of Beams (N_b),	$5 \leq$	10.00	≤ 20

LRFD Table 4.6.2.2.2b-1

$k = 2.5\,N_b^{-0.2} \geq 1.5 =$	1.58
$Df_i = k(b/305)^{0.6}(b/12L)^{0.2}(I/J)^{0.06} =$	0.301

Skew Reduction Factor for Moments

Range of applicability: Skew (q_{skew}), $0 \leq$ 0.00 $\leq 60^o$ LRFD 4.6.2.2.2e-1

if θ_{skew} is $\geq 60^o$ then use $\theta_{skew} = 60^o$ "

Reduction Factor = 1.05 - 0.25 tan(q) $\leq$ 1.0 "

Reduction Factor = 1.000 "

Moment Distribution Factor for Skewed Interior girder,

DF_{MInt} = 0.301

Moment Distribution Factor for Exterior girder, DF_{MExt} LRFD 4.6.2.2.2d

For Multibeam deck bridges within the range of applicability and conditions as follows, the approximate method of live load distribution applies : LRFD 4.6.2.2.1

$DF_{MExt} = e \times DF_{MInt}$

Where Skew Reduction Factor is included in DF_{MInt} and Correction Factor LRFD Table 4.6.2.2.2d-1

$$e = 1.04 + \frac{d_e}{25} \geq 1.0$$ "

barrier footprint = 18.50 in LRFD 4.6.2.2.2d

de = 2.00 ft

e = 1.12

Moment Distribution Factor for Skewed Exterior Girder,

DF_{MExt} = 0.337

Shear Distribution Factors

Shear Distribution Factor for Interior Girder, DF_{VInt} LRFD 4.6.2.2.3a

For Multibeam deck bridges within the range of applicability and conditions as follows, the approximate method of live load distribution applies :

Range of applicability:	Width of beam (b),	35 $\leq$ 48	$\leq$ 60 in	LRFD Table 4.6.2.2.3a-1
	Span length (L),	20 $\leq$ 58.00	$\leq$ 120 ft	"
	Number of Beams (N_b),	5 $\leq$ 10	$\leq$ 20	"
	St Venant Torsional Inertia (J),	25000 $\leq$ 55820	$\leq$ 610000 in^4	"
	Net Moment of Inertia (I_c),	40000 $\leq$ 45919	$\leq$ 610000 in^4	"

By substituting the above pre-determined values, the approximate live load distribution factor for shear may be taken as the greater of:

One design Lane Loaded:

$$DF_{VInt} = \left(\frac{b}{130L}\right)^{0.15}\left(\frac{I_c}{J}\right)^{0.05} = 0.447$$ LRFD Table 4.6.2.2.3a-1

Two or more Lanes Loaded:

$$DF_{VInt} = \left(\frac{b}{156}\right)^{0.4}\left(\frac{b}{12.0L}\right)^{0.1}\left(\frac{I_c}{J}\right)^{0.05}\left(\frac{b}{48}\right) = 0.456$$ "

Skew Reduction Factor for Shear

Range of applicability:	Skew ($q_{skew)}$,	$0 \leq$	0.00	$\leq 60^o$	LRFD Table 4.6.2.2.3c-1
	Span length (L),	$20 \leq$	58.00	≤ 120 ft	"
	Depth of beam or stringer (d),	$17 \leq$	18	≤ 60 in	"
	Width of beam (b),	$35 \leq$	48	≤ 60 in	"
	Number of Beams ($N_{b)}$,	$5 \leq$	10	≤ 20	"

$$RF_\theta = 1.0 + \frac{12.0L}{90d}\sqrt{\tan\theta} = \quad 1.000$$ "

Shear Distribution Factor for Skewed Interior Girder,

DF_{VInt} = 0.456

Shear Distribution Factor for Skewed Exterior Girder LRFD 4.6.2.2.3b

For Multibeam deck bridges within the range of applicability and conditions as follows, the approximate method of live load distribution applies : LRFD 4.6.2.2.1

Range of applicability:	Overhang, d_e =		2.00	≤ 2.0 ft	LRFD Table 4.6.2.2.3b-1
	Width of Beam (b),	$35 \leq$	48.00	≤ 60	"

One design lane loaded:

$$e = 1.25 + \frac{d_e}{20} \geq 1.0 = \quad 1.06$$ "

$DF_{VExt} = e \times DF_{VInt}$ "

Two or more lanes loaded:

48/b = 1 ≤ 1.0 "

$$e = 1 + \left(\frac{d_e + b/12 - 2}{40}\right)^{0.5} \geq 1.0 = \quad 1.32$$ "

DFVExt = e x DFVInt (48/b) "

Shear Distribution Factor for Skewed Exterior Girder,

DF_{VExt} = 0.600

Table 7-2: Summary of Live Load Distribution Factors:

		Moment		Shear
Girder	Interior Girder	DF_{MInt} =	0.301	DF_{VInt} = 0.456
	Exterior Girder	DF_{MExt} =	0.337	DF_{VExt} = 0.600

Table 7-3: Distributed Live Load

Simple span	Moment, ft-kips				
	dv	3'	6'	9'	0.5 L
Interior Girder	40.63	84.01	157.34	219.98	389.72
Exterior Girder	45.51	94.09	176.22	246.38	436.49

Simple span	Shear, kips				
	dv	3'	6'	9'	0.5 L
Interior Girder	43.63	41.96	38.83	35.70	14.80
Exterior Girder	57.43	55.23	51.11	46.98	19.49

8 Computation of Stresses

Sign convention: + Tensile stress
- Compressive stress

Stresses due to Weight of Girder

LRFD 3.3.2

Unit weight girder, w_g = 0.72 k/ft

Transfer Length = d_b (60) = 36.00 in LRFD 5.11.4.1

$$V_G = w_G\left(\frac{L}{2} - x\right) =$$

AISC LRFD p 5-162

Table 8-1

	x (ft)	V_G (kips)
dv =	1.38	20.01
	3.00	18.84
	6.00	16.67
	9.00	14.49
mid-span =	29.00	0.00

$$M_G = \frac{w_G x}{2}(L - x) =$$

"

Table 8-2

	x (ft)	M_G (ft-kips)
dv =	1.38	28.31
	3.00	59.78
	6.00	113.03
	9.00	159.77
mid-span =	29	304.68

At Transfer Using Full Length of the Girder

$$V_G = w_G\left(\frac{L}{2} - x\right) =$$

"

Table 8-3

	x (ft)	V_G (kips)
dv =	1.80	20.01
	3.00	19.14
	6.00	16.97
	9.00	14.79
mid-span =	29.42	0.00

$$M_G = \frac{w_G x}{2}(L - x) =$$

AISC LRFD p 5-162

Table 8-4

	x (ft)	M_G (ft-kips)
dv =	1.80	37.13
	3.00	60.68
	6.00	114.84
	9.00	162.48
mid-span =	29.4167	313.50

Table 8-5: Stresses due to Girder Dead Load, s_G

	dv	3 ft	6 ft	9 ft	0.5 L
Top of girder ksi	-0.139	-0.293	-0.554	-0.784	-1.494
Bottom of girder ksi	0.139	0.293	0.554	0.784	1.494
Top of girder at transfer ksi	-0.182	-0.298	-0.563	-0.797	-1.537
Bottom of girder at transfer ksi	0.182	0.298	0.563	0.797	1.537

Concrete stresses due to Traffic Barrier (DC)

Weight of Traffic Barrier over three girders, $w_{TB3G} = \frac{w_{TB}}{3} =$ 0.17 k/ft BDM 5.6.2-B.2.d

$$V_{TB} = w_{TB}\left(\frac{L}{2} - x\right) =$$

Table 8-6

	x (ft)	V_{TB} (kips)
dv =	1.38	4.60
	3.00	4.33
	6.00	3.83
	9.00	3.33
mid-span =	29.00	0.00

$$M_{TB} = \frac{w_{TB}x}{2}(L - x) =$$

Table 8-7

	x (ft)	M_{TB} (ft-kips)
dv =	1.38	6.51
	3.00	13.75
	6.00	26.00
	9.00	36.75
mid-span =	29.00	70.08

Table 8-8: Stresses due to Traffic Barrier, s_{TB} Comp.

		dv	3 ft	6 ft	9 ft	0.5 L
Top of slab	ksi	-0.019	-0.039	-0.075	-0.105	-0.201
Top of girder	ksi	-0.010	-0.021	-0.041	-0.057	-0.109
Bottom of girder	ksi	0.020	0.043	0.082	0.115	0.220

Concrete stresses due to Concrete Deck and Legs (D+L)

Area of deck + Legs = 240.00 in^2

Extra Concrete from A dimension = 24.00 in^2

Total Deck = 264.00 in^2

Weight of Concrete Deck, w_{SIDL} = 0.29 k/ft

$$V_{D+L} = w_{D+L}\left(\frac{L}{2} - x\right) =$$

Table 8-9

	x (ft)	V_{D+L} (kips)
dv =	1.38	8.10
	3.00	7.63
	6.00	6.75
	9.00	5.87
mid-span =	29.00	0.00

$$M_{D+L} = \frac{w_{D+L}x}{2}(L-x) =$$

Table 8-10

	x (ft)	M_{SIDL} (ft-kips)
dv =	1.38	11.46
	3.00	24.20
	6.00	45.76
	9.00	64.68
mid-span =	29.00	123.35

Table 8-11: Stresses due to Deck and Legs, s_{DW}

		dv	3 ft	6 ft	9 ft	0.5 L
Top of girder	ksi	-0.056	-0.119	-0.224	-0.317	-0.605
Bottom of girder	ksi	0.056	0.119	0.224	0.317	0.605

Stresses in Girder due to LL+IM (composite section):

Table 8-12:

		dv	3 ft	6 ft	9 ft	0.5 L
Top of Slab	ksi	-0.131	-0.270	-0.506	-0.707	-1.252
Top of Girder	ksi	-0.071	-0.147	-0.275	-0.385	-0.682
Bottom of Girder	ksi	0.143	0.296	0.554	0.774	1.371

Summary of stresses at dv

Table 8-13:

Stresses, ksi	Top of girder	Bottom of girder	Top of slab @	Top of girder @	Bottom of girder @
Weight of Girder	-0.139	0.139			
Weight Traffic Barrier	--	--	-0.019	-0.010	0.020
Weight of Deck	-0.056	0.056			
Live Load plus Impact Service - I	--	--	-0.131	-0.071	0.143
Live Load plus Impact Service - III	--	--	-0.104	-0.057	0.114

Summary of stresses at Mid-Span

Table 8-14:

Stresses, ksi	Top of girder	Bottom of girder	Top of slab @	Top of girder @	Bottom of girder @
Weight of Girder	-1.494	1.494			
Weight Traffic Barrier	--	--	-0.201	-0.109	0.220
Weight of Deck	-0.605	0.605			
Live load plus impact Service - I	--	--	-1.252	-0.682	1.371
Live load plus impact Service - III	--	--	-1.002	-0.545	1.097

9 Approximate Evaluation of Pre-Stress Losses

LRFD 5.9.5

For Prestress losses in members constructed and prestressed in a single stage, relative to the stress immediately before transfer, in pretensioned members, with low relaxation strands, the **Total Lump Sum Losses** may be taken as:

$$\Delta f_{pT} = \Delta f_{pES} + \Delta f_{pLT}$$

LRFD 5.9.5.1

Time Dependent Losses

LRFD 5.9.5.3

For normal weight concrete pretensioned by low-relaxation strands, approximate lump-sum time dependent losses resulting from creep and shrinkage of concrete and relaxation of prestressing steel may be used as follows:

$$\Delta f_{pLT} = 10\frac{F_{pi}A_{ps}}{A_g}\gamma_h\gamma_{st} + 12\gamma_h\gamma_{st} + \Delta f_{pR} = \quad 19.53 \quad \text{ksi}$$ LRFD 5.9.5.3-1

Y_h = 1.7-.01H = 0.9 LRFD 5.9.5.3-2

Y_{st} = 5/(1+fci)= 0.625 LRFD 5.9.5.3-3

Losses due to elastic shortening should be added to time-dependent losses to determine the total losses.

Loss due to strand relaxation

Δf_{pR} = 2.50 LRFD 5.9.5.3

Loss due to elastic shortening

f_{cgp} = Stress due to prestressing and girder weight at Centroid of prestressing strands, at section of maximum moment LRFD 5.9.5.2.3a

Concrete stress at Centroid of prestressing

$P_i = N\,A_{ps}\,.7f_{pu}$ = 1148.4 kips BDM 5.1.4-A

$$f_{ps} = -\frac{P_i}{A_g} - \frac{P_i e^2}{I_g} = -2.86 \quad \text{ksi}$$

$$f_g = \frac{M_g e}{I_g} = 0.78 \quad \text{ksi}$$

$f_{cgp} = f_g + f_{ps}$ = -2.08 ksi BDM 5.1.4-3

Elastic shortening loss,

$$\Delta f_{pES} = \left(\frac{E_p}{E_{ci}}\right) f_{cgp} = \quad \mathbf{11.14} \quad \mathbf{ksi}$$ LRFD 5.9.5.2.3a-1

$\Delta f_{pT} = \Delta f_{pES} + \Delta f_{pLT}$ = **30.67** **ksi** LRFD 5.9.5.1-1

Above relaxation losses not added to Time Dependent Losses, but will be used for Service Limit State Total Transfer PS Losses, Section 10.

10 Stresses at Service Limit State

Stresses after elastic shortening and relaxation :

Force per strand $P / N = A_{ps}(f_{pbt}-Df_{pES}-\Delta_{fpR}) =$ 40.98 kips

Table 10-1:

	No. of strands	Force per Strand, kips	Total force	Eccent. in.	Moment in-kip
Bottom Strands	20	40.98	819.66	6.40	5246
Debonded Strands @ 3'	0	40.98	0.00	7.00	0
Debonded Strands @ 6'	2	40.98	81.97	7.00	574
Debonded Strands @ 9'	2	40.98	81.97	7.00	574
Top Strands	4	40.98	163.93	-6.00	-984
	dv	P (kips)=	984	Mp(in-k) =	4262
	3	P (kips)=	984	Mp(in-k) =	4262
	6	P (kips)=	984	Mp(in-k) =	4262
	9	P (kips)=	1066	Mp(in-k) =	4836
	mid	P (kips)=	1148	Mp(in-k) =	5410

Prestressing stress (using the full length of the girder)

	dv				mid-span
	1.40	3.00	6.00	9.00	29.00
$f_{p(top)} = -\frac{P}{A_c} + \frac{M_{ps}}{S_t}$ = ksi	0.28	0.28	0.28	0.39	0.51
$f_{p(bottom)} = -\frac{P}{A_c} - \frac{M_{ps}}{S_b}$ = ksi	-3.20	-3.20	-3.20	-3.56	-3.916

Stresses after Losses (noncomposite section)

Force per strand $P / N = A_{ps}(f_{pbt}-Df_{pT}) =$ 37.29 kips BDM 5.1.4-A.1

Table 10-2:

	No. of strands	Force per Strand, kips	Total force	Eccent. in.	Moment in-kip
Bottom Strands	20	37.29	745.74	6.40	4773
Debonded Strands @ 3'	0	37.29	0.00	7.00	0
Debonded Strands @ 6'	2	37.29	74.57	7.00	522
Debonded Strands @ 9'	2	37.29	74.57	7.00	522
Top Strands	4	37.29	149.15	-6.00	-895
	dv	P (kips)=	895	Mp(in-k) =	3878
	3	P (kips)=	894.89	Mp(in-k) =	3878
	6	P (kips)=	895	Mp(in-k) =	3878
	9	P (kips)=	969	Mp(in-k) =	4400
	mid	P (kips)=	1044	Mp(in-k) =	4922

Prestressing stress after all losses (noncomposite)

	dv	3.00	6.00	9	mid-span
$f_{p(top)} = -\frac{P}{A} + \frac{M_{ps}}{S_t}$ = ksi	0.26	0.26	0.26	0.36	0.46
$f_{p(bottom)} = -\frac{P}{A_c} - \frac{M_{ps}}{S_b}$ = ksi	-2.91	-2.91	-2.91	-3.24	-3.563

Summary of Stresses at Service Limit States

Table 10-3:

	dv	3'	6'	9'	mid-span	
Prestressing stress + self wt of girder (using full length of girder)						girder + ps
$f_{g(topDL+PS)}$ (ksi) =	0.10	-0.02	-0.28	-0.40	-1.03	
$f_{g(botDL+PS)}$ (ksi) =	-3.02	-2.91	-2.64	-2.76	-2.38	
Construction stress at top & bottom of girder (noncomposite)					gir + ps + deck	
$f_{g(topDL+PS)}$ =	0.06	-0.16	-0.52	-0.74	-1.64	
$f_{g(botDL+PS)}$ =	-2.72	-2.50	-2.14	-2.14	-1.46	
Stresses due to all loads plus prestressing :				gir+ps+deck+barr+(LL+im)		
$f_{g(topDL+LL+PS)}$ =	-0.02	-0.32	-0.84	-1.19	-2.43	
$f_{g(botDL+LL+PS)}$ =	-2.56	-2.16	-1.50	-1.25	0.13	
Stresses due to Transient loads and one-half of permanent loads plus prestressing: .5(gir+ps+deck+barr)+(LL+im)						
$f_{g[topLL+(1/2DL+PS)]}$ =	-0.05	-0.24	-0.56	-0.78	-1.56	
$f_{g[botLL+(1/2(DL+PS))]}$ =	-1.21	-0.93	-0.47	-0.24	0.75	
Stresses due at service III load combination:				gir+ps+deck+barr+.8(LL+im)		
$f_{g[bot.8*LL+(DL+PS)]}$ =	-2.58	-2.22	-1.61	-1.40	-0.15	

Tensile stress limit in areas without bonded reinforcement (at dv) :

$f_t = 0.0948\sqrt{(f'_{ci})} \leq$ 0.200 ksi > 0.099 ksi BDM 5.2.3-B

Compressive stress limit in pretensioned components :

$f_{ci} = 0.60f'_{ci}$ = -4.20 ksi > -3.02 ksi "

Compressive stress limit at service - I load combinations

BDM 5.2.3-B;

Due to permanent loads (DL + PS) :

$f_{comp.} = 0.45\ f'_c$ = -3.83 ksi "

Due to permanent loads and transient loads (DL + PS + LL):

$f_{comp.} = 0.60\ f'_c$ = -5.10 ksi "

Due to transient loads and one-half of permanent loads (LL + 1/2DL + 1/2PS):

$f_{comp.} = 0.40\ f'_c$ = -3.40 ksi "

Tensile stress limit at service - III load combination

f_{tens} = 0.00 ksi > -0.146 ksi "

Stresses at transfer

The prestressing force may be assumed to vary linearly from zero at free end to a maximum at transfer length, l_t.

$l_t = 60 \times d_{strand}/12$ = 3.00 ft = 36.00 in. LRFD 5.5.4.1

11 Strength Limit State

Strength limit state shall be considered to satisfy the requirements for strength and stability.

$$\eta \Sigma (\gamma i \, Qi) < \phi R_n = R_r$$ LRFD Eqn. 1.3.2.1-1

Resistance factors

ϕ =	0.90	Flexural in reinforced concrete	LRFD 5.5.4.2.1
ϕ =	1.00	Flexural in prestressed concrete	"
ϕ =	0.90	Shear	"
ϕ =	0.75	Axial Compression	"

Flexural forces

Strength - I load combination is to be considered for normal vehicular load without wind. LRFD 3.4.1

Load factors :

γ_{DC} =	1.25	Components and attachments (Girder + TB + Deck)	LRFD TABLE 3.4.1-1
γ_{DW} =	1.50	Wearing surface (SIDL or ACP)	"
γ_{LL} =	1.75	Vehicular load (LL + Impact)	"

Flexural moment = 1.0 [1.25 DC + 1.5 DW + 1.75 (LL+IM)]

M_u = 1386.5 ft.-kips

Checked using QConBridge program, QConBridge 101-145MuChk.qcb Report p 4of 5

M_u =	**200.0**	**ft.-kips**	**NG Mu No Check**

Flexural resistance

LRFD 5.7.3

For practical design an equivalent rectangular compressive stress distribution of 0.85 f'_c overall depth of $a = b_1 c$ may be considered. LRFD 5.7.2.2

β_1 = 0.65 for f'_c = 8.5 ksi "

The average stress in prestressing strands, f_{ps}, may be taken as: LRFD 5.7.3

$$f_{ps} = f_{pu}\left(1 - k\frac{c}{d_p}\right)$$ LRFD 5.7.3.1.1-1

$$k = 2\left(1.04 - \frac{f_{py}}{f_{pu}}\right) = 0.28$$ LRFD 5.7.3.1.1-2

Location of neutral axis of composite transformed section :

For rectangular section without mild reinforcement :

$$c = \frac{A_{ps} f_{pu} + A_s f_y + A'_s f'_y}{0.85 f'_c \beta_1 b + k A_{ps} \frac{f_{pu}}{d_p}}$$ LRFD 5.7.3.1.1-4

$A_s = A'_s$ =	0.00	$in.^2$	with no partial prestressing considered
A_{ps} =	6.08	$in.^2$	Area prestressing strands
d_p =	18.71	in.	Distance from extreme compression fiber to Centroid of prestressing strands.
c1 =	9.156	in	

Deck Thickness + Top Flange = 9.50 in **OK for rectangular section**

For T-section without mild reinforcement :

$$c = \frac{A_{ps} f_{pu} + A_s f_y + A_s' f_y' - 0.85 f_c' (b - b_w) h_f}{0.85 f_c' \beta_1 b_w + k A_{ps} \frac{f_{pu}}{d_p}}$$ LRFD 5.7.3.1.1-3

bwe = 21.00 in
h_f = 9.50 in
c2 = 6.67 in

c = 9.156 in
a = β_1 c = 5.95 in < t_f = 9.50 in. LRFD 5.7.3.2.2

Average stress in prestressing steel :

$$f_{ps} = f_{pu}\left(1 - k\frac{c}{d_p}\right) = 233.0 \text{ ksi.}$$ LRFD 5.7.3.1.1-1

Tensile stress limit at strength limit state, f_{pu} = 270.0 ksi LRFD Table 5.4.4.1-2

Nominal flexural resistance

LRFD 5.7.3.2

Rectangular:

$$M_n = A_{ps} f_{ps}\left(d_p - \frac{a}{2}\right) = 1857 \text{ ft.-kips}$$ LRFD 5.7.3.2.2-1

T-shaped:

$$M_n = A_{ps} f_{ps}\left(d_p - \frac{a}{2}\right) + 0.85 f_c' (b - b_w) h_f (a/2 - h_f/2) =$$ "

1583 ft.-kips

M_n = 1857 ft.-kips

Flexural resistance, $M_r = \Phi M_n$ = 1857 > M_u = 1386 ft.-kips LRFD 5.7.3.2.1-1

Minimum reinforcement

LRFD 5.7.3.3.2

The amount of prestressing and non-prestressing steel shall be adequate to develop flexural resistance greater than or equal to the least 1.2 times the cracking moment or 1.33 times the factored moment required by Strength Limit State 1. "

Flexural resistance,

Mr = Φ Mn ≥ The Lesser of : $1.2M_{cr}$ = 613.4 ft-kips **governs**
$1.33M_u$ = 1844.0 ft-kips

$$M_{cr}^* = S_c\left(f_r + f_{pe}\right) - M_{d/nc}\left(\frac{S_c}{S_b} - 1\right)$$: $S_c f_r$ = 222.71 ft-kips LRFD 5.7.3.3.2-1

f_{pe} = -3.56 Stress at extreme fiber due to prestressing LRFD 5.4.2.6
M_{cr} = 511 ft.-kips
M_r = 1857 >1.2 Mcr = 613.4 ft.-kips LRFD 5.7.3.3.2

Development of prestressing strand

Pretension strand shall be bonded beyond the critical section for a development length taken as : 5.11.4.2

$$l_d \geq K\left(f_{ps} - \frac{2}{3} f_{pe}\right) d_b \qquad K = 1.0 \qquad \text{LRFD 5.11.4.2-1}$$

f_{ps} = 233.01 ksi
f_{pe} = 171.83 ksi
d_b = 0.60 in.

$l_d \geq$ 5.92 ft

l_d = 5.92 ft < 1/2 Span L/2 = 29.00 **OK developed**

12 Shear Design

Design procedure

The shear design of prestressed members shall be based on the general procedure of AASHTO - LRFD Bridge Design Specifications article 5.8.3.4.2 using the Modified Compression Field Theory. WSDOT Design Memo LRFD Shear Design, 3/19/02

Shear design for prestressed girder will follow the (replacement) flow chart for LRFD Figure C.5.8.3.4.2-5. This procedure eliminates the need for q angle and b factor iterations. WSDOT Design Memo, Shear Design 6/18/01

Effective Web Width, b_v, and Effective Shear Depth, d_v LRFD 5.8.2.9

Effective web width shall be taken as the minimum web width, measured parallel to the neutral axis, between the resultants of the compressive and tensile forces due to flexure "

b_v = Net Web = Width - Voids "
b_v = 21.0 in.

Effective shear depth shall be taken as the distance between resultant of tensile and compressive forces due to flexure but it need not to be taken less than the greater of : 0.9de OR 0.72h. "

$d_v = d_e - a/2$ = 15.7 in. "
$d_v = 0.9de$ = 16.8 in. **governs** "
$d_v = 0.72h$ = 16.6 in. "

use d_v = 16.8 or 1.40 ft

Component of Prestressing Force in Direction of Shear Force, V_p LRFD 5.8.3.3

The prestressing in PCPS Slabs are horizontal only, there is no vertical component

V_p = 0.00 kips

Shear Stress Ratio

Where the Shear Stress (ksi) on the concrete is,

$$v_u = \frac{V_u - \phi V_p}{\phi b_v d_v} = \quad 0.444 \quad \text{ksi}$$ LRFD 5.8.2.9-1

$$\frac{v_u}{f_c'} = \quad \mathbf{0.0522}$$ LRFD Figure C.5.8.3.4.2-5

Where the

Factored shear force

$\mathbf{V_u = S\ (\ h_i\ gi\ V_i\ )}$ LRFD 3.4.1-1

$\mathbf{h_i}$ =	1.00	Limit state factor for any ordinary structure	LRFD TABLES 3.4.1-1 & 3.4.1-2
$\mathbf{g_{DC}}$ =	1.25	Components and attachments (Girder + TB + Deck)	"
$\mathbf{g_{DW}}$ =	1.50	Wearing surface (SIDL or ACP)	"
$\mathbf{g_{LL+IM}}$ =	1.75	Vehicular load (LL + Impact)	"

Girder, V_g =	20.0	kips
Traffic Barrier, V_{tb} =	4.6	kips
Deck + Legs, V_{D+L} =	8.1	kips
V_{DC} =	32.7	kips
V_{LL+IM} x DF_{VExt} =	57.4	kips

Shear force effect,

$V_u = 1.00(1.25\ V_{DC} + 1.5\ V_{DW} + 1.75\ V_{LL+IM})$

$\mathbf{V_u =}$ **141.36** **kips**

$\mathbf{f_{po}}$

If the (critical) section (for shear) is within the transfer length of any (prestress) strands, calculate the effective value of f_{po}, the parameter taken as modulus of elasticity of prestressing tendons multiplied by the locked in difference in strain between the prestressing tendons and the surrounding concrete. LRFD Figure C.5.8.3.4.2-5

$f_{po} = 0.70 f_{pu}$ LRFD 5.8.3.4.2

$$f_{po} = \left[\frac{x + d_v}{l_t}\right] 0.70 f_{pu}$$ **governs, dv is within the transfer length of the prestressed strands** "

Where the distance between the edge of girder (or beginning of prestress) and the CL of Bearing (BRG)

x = 5.00 in.

accounting for bridge skew gives a long. distance from the face of girder as,

x = 5.00 in.

$\mathbf{f_{po} =}$ **114.68** **ksi**

Factored Moment

Where: **Factored moment** is not to be taken less than $V_u d_v$ LRFD 5.8.3.4.2

$M_u = \Sigma (\eta_i \gamma i M_i)$ LRFD 1.3.2.1-1

Ultimate moment at d_v from support, M_u

Girder, M_g =	28.8	ft-kips
Traffic Barrier, M_{tb} =	6.6	ft-kips
Deck + Legs, M_{D+L} =	11.7	ft-kips
M_{DC} =	47.0	ft-kips
M_{LL+IM} x DF_{MExt} =	45.5	ft-kips

Moment Force Effect,

$M_u = 1.00(1.25M_{DC} + 1.50M_{DW} + 1.75M_{LL+IM})$ LRFD TABLE 3.4.1-1

M_u = 138.5 ft-kips = 1661.5 in - kips

Check which value governs:

$V_u d_v$ = 2381.0 in - kips **governs**

M_u = 1661.5 in - kips

Longitudinal Strain (Flexural Tension)

WSDOT Design Memo Shear Design, 6/18/2001 & LRFD 5.8.3.4.2-1

The section contains at least the minimum transverse reinforcement as specified in Article 5.8.2.5. Longitudinal strain in the "web reinforcement" on the flexural tension side of the member,

$$\varepsilon_x = \frac{\left[\frac{M_u}{d_v} + 0.5N_u + \left|V_u - V_p\right| - A_{ps} f_{po}\right]}{2(E_s A_s + E_p A_{ps})} \le 0.002$$

Applied Factored Axial forces,

N_u = 0.00 kips

Factored Shear,

V_u = 141.36 kips

Vertical Component of Prestress Forces,

V_p = 0.00

Area of prestressing steel on the flexural tension side of the member,

$A_{ps(T)} = N_{bb}$ x A_{ps} = 4.34 $in.^2$

Prestress/Concrete Modulus of Elasticity Parameter

f_{po} = 114.68 ksi

Modulus of Elasticity of Mild Reinforcement,

E_s = 29000 ksi

Area of Mild Reinforcement in flexural tension side of the member,

$A_{s(bottom)} = n_{s(bottom)} A_s$

Where there are 4 No. 4 bars BDM fig. 5-A-XX

$A_{s(bottom)}$ = 0.80 $in.^2$

Modulus of Elasticity of Prestress Strands,

E_p = 28500 ksi

Substitution gives,

ε_x = -0.0007317 **< 0, so use the following Equation 3:** LRFD 5.8.3.4.2-1

If the value of e_x from LRFD Equations 5.8.3.4.2-1 or 2 is negative, the strain shall be taken as:

$$\varepsilon_x = \frac{\left[\frac{M_u}{d_v} + 0.5N_u + (V_u - V_p) - A_{ps}f_{po}\right]}{2(E_cA_c + E_sA_s + E_pA_{ps})}$$

WSDOT Design Memo Shear Design, 6/18/2001 & LRFD Eqn. 5.8.3.4.2-**3**

Where: Modulus of Elasticity of Concrete,

E_c = 5871.1 ksi

Area of concrete on the flexural tension side of the member,

A_c = 216.00 $in.^2$

Substitution gives,

e_x = -0.0000760 **Equation 3 Governs**

e_x = -0.0000760

Determination of β and θ

Shear Stress Ratio of:	0.052	Is a value just	≤	0.075
1000 x the Long. Strain:	-0.076	Is a value just	≤	-0.05

From Table 1: **θ = 21.00 deg.**, **β = 4.10**

LRFD Table 5.8.3.4.2-1 & See Theta and Beta Worksheet

Shear strength

LRFD 5.8.3.3

$V_r = fV_n$ LRFD 1.3.2.1-1

Nominal shear strength shall be taken as:

$V_n = V_c + V_s + V_p$ LRFD 5.8.3.3-1

Shear resistance provided by concrete :

$$V_c = 0.0316\beta\sqrt{f_c'}b_vd_v$$ LRFD 5.8.3.3-3

Shear taken by shear reinforcements :

$V_s = V_n - V_c - V_p$

f = 0.90 for shear LRFD 5.5.4.2

V_n = Nominal shear strength

Required shear strength

LRFD 5.8.3.3

Nominal shear strength shall be taken as the lesser of :

$V_n = V_c + V_si + V_p$ = 221.4 kips **governs** LRFD 5.8.3.3-1

$V_n = 0.25f'_cb_vd_v + V_p$ = 751.6 kips LRFD 5.8.3.3-2

Initial Shear from stirrups, based on 12" spacing of #4 bars

$$V_s i = \frac{A_v f_y d_v \cot\theta}{s_{gov}} = 87.75 \quad \text{kips}$$ LRFD C5.8.3.3-1

Shear resistance provided by concrete :

$$V_c = 0.0316\beta\sqrt{f_c'}\,b_v d_v = 133.6 \quad \text{kips}$$ LRFD 5.8.3.3-3

Shear taken by shear reinforcement:

$V_{sreq} = V_u/\phi - V_c - V_p =$ 23.5 kips LRFD 5.8.3.3-1

Spacing of shear reinforcements :

Try 2 legs of # **4** Av = 0.40 $in.^2$

Required Spacing, $s_{req'd} = \frac{A_v f_y d_v \cot\theta}{V_s} = 44.87$ in. LRFD C5.8.3.3-1

Maximum spacing of shear reinforcement

if $v_u < 0.125\ f'_c$ then $s_{max} = 0.8\ dv <$ ~~24 in.~~ 18 in. LRFD 5.8.2.7-1

Maximum spacing of shear reinforcement, WSDOT Practice = 18.00 in

if $v_u >= 0.125\ f'c$ then $s < 0.4\ dv < 12$ in.

$v_u =$ 0.444 ksi LRFD 5.8.2.7-2

0.125 f'c = 1.063 ksi > v_u = 0.444 ksi

Maximum spacing, s_{max} =	**13.5**	**in.**	**Governs spacing**
Governing spacing, s_{gov} =	**13.0**	**in.**	

$A_{v(provided)} =$ 0.40 $in.^2$ Assuming two #4 legs

$$V_s = \frac{A_v f_y d_v \cot\theta}{s_{gov}} = 81.00 \quad \text{kips}$$ LRFD C5.8.3.3-1

Shear reinforcement is required if : $0.5f(V_c+V_p) < V_u$ LRFD 5.8.2.4-1

$0.5f(V_c+V_p) =$ 60.1 < Vu = 141.4 kips

Yes, Shear/Transverse Reinf. Is Required

Minimum shear reinforcement

LRFD 5.8.2.5

When shear reinforcement is required by design, the area of steel provided,

$$A_{v(provided)} \geq 0.0316\sqrt{f_c'}\,\frac{b_v s_{gov}}{f_y}$$ Use Spacing: 12.00 in ≤ 13.0 in LRFD 5.8.2.5-1

OK

where :

s = 12.0 in.

Required Area of Steel,

$$0.0316\sqrt{f_c'}\,\frac{b_v s_{gov}}{f_y} = 0.39 \quad in.^2$$

0.40 > 0.39 $in.^2$ **OK for Min. Transverse Reinf.**

Longitudinal reinforcement

LRFD 5.8.3.5

Longitudinal reinforcement shall be provided so that at each section the following equations are satisfied :

$$A_s f_y + A_{ps} f_{ps}\left(\frac{d_v}{l_t}\right) \geq T = \frac{M_u}{d_v \phi} + \frac{0.5N_u}{\phi} + \left(\frac{V_u}{\phi} - 0.5V_s - V_p\right)\cot\theta$$ LRFD 5.8.3.5-1

A_s =	0.80	in^2		BDM fig. 5-A-XX
f_y =	60.00	ksi		
A_{ps} =	4.34	in^2	Area of prestressing steel on the flexural tension side of the member (w/o unbonded)	
f_{ps} =	233.01	ksi	f_{ps} multiplied by d_v/l_t ratio to account for lack of prestress development	
d_v =	16.84	in.		
l_t =	3.00	ft =	36.00 in	
M_u =	198.4	ft-kips		
f =	1.00		Flexural in prestressed concrete	LRFD 5.5.4.2
f =	0.90		Shear	"
f =	0.75		Axial Compression	"
N_u =	0.00			
V_u =	141.36	kips		
V_s =	81.00	kips		
V_p =	0.00	kips		
q =	21.00	degree		

by substitution:

521.135 ≥ 445.0 kips **OK for Longitudinal Reinforcement**

13 Deflection and Camber

LRFD 5.7.3.6.2

Let downward Deflection be Positive +

Let upward Deflection, Camber, be Negative -

Deflection due to prestressing forces at Transfer

Deflection due to bottom strands is computed from a combination of fully bonded strands and the partially bonded or "debonded" strands which are sleeved at the ends of the girder. Each type has their own eccentricity.

$$\Delta ps_{bot.} = \Delta ps_{bb} + \Delta ps_{db}$$

$$\Delta ps_{bb} + \Delta ps_{db} = \left(P_{bb} e_{bb} + k_{db} P_{db} e_{db}\right)\frac{L^2}{8E_{ci} I_c}$$

Force and eccentricity due to the bonded bottom prestress strands are:

P_{bb} = 819.66 kips e_{bb} = 6.40 in

Reduction factor for the partially bonded or debonded strands

$$k_{db} = \frac{L - 2l_{db}}{L} = 0.847$$

The average sleeved length of the debonded strands,

l_{db} = 4.5 ft = 54.0 in

Force and eccentricity due to the debonded bottom prestress strands are:

P_{db} = 0.00 kips e_{db} = 7.00 in

$Dps_{bot.}$ = -2.786 in. upward

Deflection due to top strands is computed from :

$$\Delta ps_{top} = \frac{P_t e_t L^2}{8 E_{ci} I_c}$$

Prestressing force and eccentricity of top strands.

P_t = 163.9 kips e_t = -6.00 in.

Δps_{top} = 0.522 in. downward

Total deflection due to prestressing :

$\Sigma \Delta_{ps}$ = -2.79 + 0.52 = -2.263 in. upward

Deflection due to weight of Girder

$$\Delta_g = \frac{5 w_g L^4}{384 E_{ci} I_c} = 1.66 \text{ in. downward}$$

AISC LRFD page 4-190

Deflection due to weight of Traffic Barrier TB

$$\Delta_{tb} = \frac{5 w_{tb(3G)} L^4}{384 E_c I_c} = .18 \text{ in. downward}$$

"

Deflection due to weight of Deck and Legs

$$\Delta_{SIDL} = \frac{5 w_{SIDL} L^4}{384 E_c I_c} = .58 \text{ in. downward}$$

"

Deflection (Camber) at transfer, C_i

Deflection accounted at transfer are due to prestressing and weight of girder :

At transfer : $\sum \Delta i$ = -2.26 + 1.66 = -0.60 in

Creep Coefficients

$C_F = -[(\Delta_{ps}+\Delta_g)(\psi_{(t,ti)}+1)]$

Creep Coefficient :

$\Psi_{(t,ti)} = 1.9\ k_{vs}k_{hc}k_fk_{ta}t_i^{-0.118}$ LRFD 5.4.2.3.2-1

$k_{vs} = 1.45 - .13(v/s) \geq 1.0$ LRFD 5.4.2.3.2-2

$k_{hc} = 1.56 - .008H$ H = **80.00** average humidity (AASHTO fig. 5.4.2.3.3-1) LRFD 5.4.2.3.2-3

$k_f = 5/(1+f'_{ci})$ LRFD 5.4.2.3.2-4

$k_{td} = t/(61-4*f'_{ci}+t)$ LRFD 5.4.2.3.2-5

V/S = 4.03 in Void end from end of girder = 15 in. LRFD 5.4.2.3.2

Table 13-1:

	t_i	t	k_{vs}	khc	k_f	k_{td}	$\Psi_{(t,ti)}$
$\Psi_{(7,30)}$	7.00	30.00	1.00	0.92	0.63	0.48	0.41
$\Psi_{(30,40)}$	30.00	40.00	1.00	0.92	0.63	0.55	0.40
$\Psi_{(7,40)}$	7.00	40.00	1.00	0.92	0.63	0.55	0.48
$\Psi_{(7,90)}$	7.00	90.00	1.00	0.92	0.63	0.73	0.64
$\Psi_{(90,120)}$	90.00	120.00	1.00	0.92	0.63	0.78	0.50
$\Psi_{(7,120)}$	7.00	120.00	1.00	0.92	0.63	0.78	0.68

Assume 1 Day of accelerated cure by radiant heat or steam. 1 Day accelerated cure = 7 normal Days of cure. Age of Concrete when load is initially applied, LRFD 5.4.2.3.2

Final Deflections Due to All Loads and Creep

"D" Parameters for Minimum Timing

$\Delta cr.min = \Psi(7,40)*(\Delta psbot+\Delta pstop+\Delta g) =$ -0.28 in

$D40 = \Delta psbot+\Delta pstop+\Delta g+\Delta cr.min =$ -0.88 in

"D" Parameters for Maximum Timing

$\Delta cr.max = \Psi(7,120)*(\Delta psbot+\Delta pstop+\Delta g) =$ -0.41 in

$D120 = \Delta psbot+\Delta pstop+\Delta g+\Delta cr.max =$ -1.01 in

Elastic deflection due to slab and Traffic barrier

$C = \Delta sidl+\Delta tb =$ 0.76 in

Excess girder camber

Δexcess = D40 + C =	-0.13	in
Δexcess = D120 + C =	-0.25	in

Time period to display (40, 120) = 40.00 Deck thickness at Piers = **5.13** in.

Fig. 13-1 Time Vs. Deflection Curve

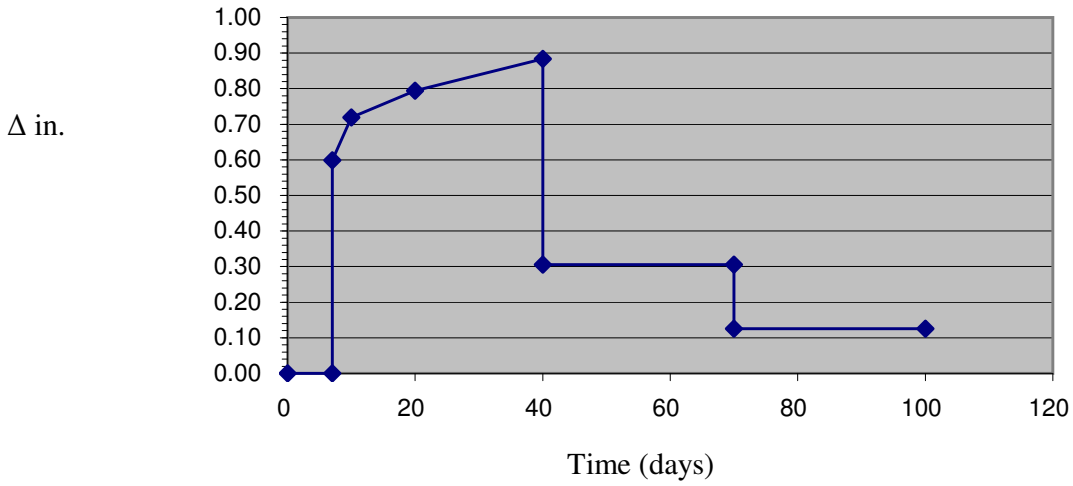

Design Specifications

AASHTO LRFD 4th Edition dated 2007 and interims through 2008.

Strand for Positive EQ Moment

For girders made continuous for live load, extended bottom prestress strands are used to carry positive EQ load, creep, and other restrained moments from one span to another.

Strands used for this purpose must be developed in the short distance between the two girder ends. The strand end anchorage device used, per WSDOT Standard Plan, is a 2'-0" strand extension with strand chuck and steel anchor plate.

The number of strands to be extended cannot exceed the number of straight strands available in the girder and shall not be less than four.

The design moment at the center of gravity of superstructure is calculated using the following:

$$M_{po}^{CG} = M_{po}^{top} + \frac{\left(M_{po}^{top} + M_{po}^{Base}\right)}{L_c} h$$

Where:

M_{po}^{top} = plastic overstrength moment at top of column, kip-ft.

M_{po}^{Base} = plastic overstrength moment at base of column, kip-ft.

h = distance from top of column to c.g. of superstructure, ft.

L_c = column clear height used to determine overstrength shear associated with the overstrength moments, ft.

This moment is resisted by the bent cap through torsion forces. The torsion in the bent cap is distributed into the superstructure based on the relative flexibility of the superstructure and the bent cap.

Hence, the superstructure does not resist column overstrength moments uniformly across the width. To account for this, an effective width approximation is used, where the maximum resistance per unit of superstructure width of the actual structure is distributed over an equivalent effective width to provide an equivalent resistance.

It has been suggested that for concrete bridges, with the exception of box girders and solid superstructure, this effective width should be calculated as follows:

$$B_{eff} = D_c + D_s$$

Where:

D_c = diameter of column
D_s = depth of superstructure including cap beam

Based on the structural testing conducted at the University of California at San Diego La Jolla, California in the late 1990's (Holombo 2000), roughly two-thirds of the column plastic moment to be resisted by the two girders adjacent to the column (encompassed by the effective width) and the other one-third to be resisted by the non-adjacent girders.

Based on the effective width, the moment per girder line is calculated as follows:

adjacent girders (encompassed by the effective width):

$$M_{sei}^{Int} = \frac{2M_{po}^{CG}}{3N_g^{\text{int}}}$$

non-adjacent girders:

$$M_{sei}^{Ext} = \frac{M_{po}^{CG}}{3N_g^{ext}}$$

Seismic Moment:

if $M_{sei}^{Int} \geq M_{sei}^{Ext}$

$$M_{sei} = M_{sei}^{Int}$$

if $M_{sei}^{Int} < M_{sei}^{Ext}$

$$M_{sei} = \frac{M_{po}^{CG}}{N_g^{\text{int}} + N_g^{ext}}$$

where:

N_g^{int} = Number of girder encompassed by the effective width.

N_g^{ext} = Number of girder outside the effective width.

Number of extended straight strands needed to develop the required moment capacity at the end of girder is based on the yield strength of the strands.

$$N_{ps} = 12[M_{sei} \cdot K - M_{SIDL}] \cdot \frac{1}{0.9\phi A_{ps} f_{py} d}$$

Where:

A_{ps} = area of each extended strand, in^2
f_{py} = yield strength of prestressing steel specified in LRFD Table 5.4.4.1-1
d = distance from top of slab to c.g. of extended strands, in.
M_{SIDL} = moment due to SIDL (traffic barrier, sidewalk, etc.) per girder
K = span moment distribution factor use maximum of (K1 and K2)
ϕ = flexural resistance factor

Assume EI is constant and Girders have fixed-fixed supports for both spans.

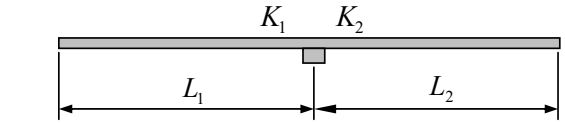

$$K_1 = \frac{L_1}{L_1 + L_2} \qquad K_2 = \frac{L_2}{L_1 + L_2}$$

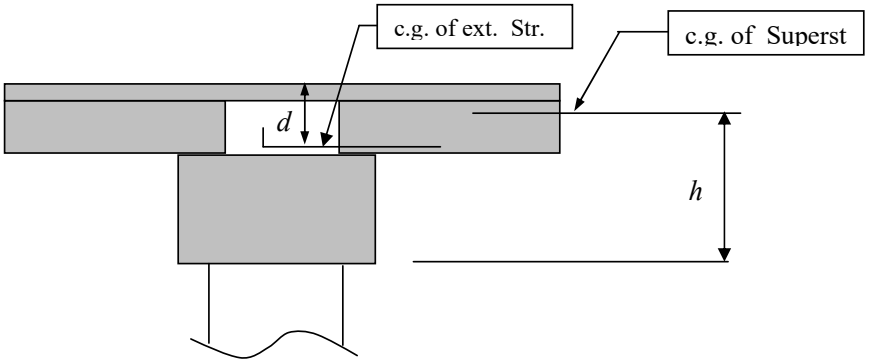

References:

Holombo, J., M.J.N. Priestley, and F. Seible, "Continuity of Precast Prestressed Spliced-Girder Bridge Under Seismic Loads", PCI Journal, 45(2), 40-63, March-April, 2000.

Given:

D_c	=	5.00 ft. diameter of column
D_s	=	12.93 ft. depth of superstructure including cap beam
B_{eff}	=	5 + 12.93 = 17.93 ft.
f'_c	=	4.00 ksi, specified compressive strength of deck concrete, Class 4000D.
d_b	=	0.6" nominal strand diameter =0.217 in^2
f_{pu}	=	270 ksi specified tensile strength of prestressing strands. LRFD Table 5.4.4.1-1
f_{py}	=	243 ksi ksi for low relaxation strand
ϕ	=	1.00 resistance factor (LRFD C 1.3.2.1, for extreme event limit state)
N_g^{int}	=	3 number of girders encompassed by the effective width
N_g^{ext}	=	2 number of prestressed girders in the pier
GTYP	=	W83G H = 82.625" girder depth
A	=	9.50 " "A" Dimension including 1/2" Integral W.S.
t_s	=	7.50 " effective slab thickness (not including 1/2" Integral W.S.)
$Y_{t\ slab}$	=	36.86 " c.g. of superstructure to top of slab (see PGSuper output)
b	=	81.00 " effective flange width (PGSuper Output & LRFD 4.6.2.6.1)
h	=	116.64 " distance from top of column to c.g. of superstructure
L_1	=	176.63 ft. Span length of span 1. Factor = 1.33
L_2	=	180.00 ft. Span length of span 2. Factor = 1.00

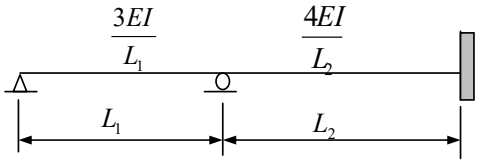

Far End Condition	
Pin	1.33
Fixed	1.00

L_c = 25.00 ft. column clear height used to determine overstrength shear associated with the overstrength moments, ft.

M_{po}^{top} = 16000.0 plastic overstrength moment at top of column, kip-ft

M_{po}^{Base} = 16500.0 plastic overstrength moment at base of column, kip-ft.

M_{SIDL} = 517.0 moment due to SIDL (traffic barrier, sidewalk, etc.) per girder, kip-ft (see QconBridge Output)

γ_P = 0.90

Design Steps:

Step 1:

Calculate the design moment at the center of gravity of superstructure

M_{po}^{CG} = 16000 + (16000 + 16500) / 25 * 116.64 / 12 = 28636 kip-ft

Step 2:

Calculate the design moment per girder.

M_{sei}^{Int} = 2/3 * 28636 / 3 = 6363.56 kip-ft

M_{sei}^{Ext} = 1/3 * 28636 / 2 = 4772.67 kip-ft

M_{sei}^{Avg} = 28636 / (3 + 2)= 5727.2 kip-ft = 6363.56 kip-ft.

L_1 = 234.92 ft. (Modified) K_1 = 180 / (234.92 + 180) = 0.434

L_2 = 180.00 ft. (Modified) K_2 = 234.92 / (234.92 + 180) = 0.566

K = 0.566

Design Moment per girder

M_{des} = 0.566 * 6363.56–0.9 * 517 = 3137.61 ft-kips per girder

Step 3:

Calculate the number of extended strand required

cs = 3.00" c.g. of extended strands to bottom of girder

d = 9.5–0.5 + 82.625–3 = 88.625 "

assume f_{py} = 243 ksi

Number of extended strand required =
12 * 3137.61/(0.9 * 1 * 0.217 * 243 * 88.625) = 9 strands

Use = N_{ps} 10 extend strands–Use even number of strands

Step 4:

Check moment capacity of extended strands

cs = 3.00" c.g. of extended strands to bottom of girder

Per LRFD 5.7.3.2 The factored flexural resistance

$M_r = \phi\, M_n \qquad M_n = A_{ps} f_{py} \left(d_p - \frac{a}{2}\right)$

where:

A_{ps} = area of prestressing steel, in^2. =10 * 0.217 = 2.17 in^2

d_p = distance from extreme compression fiber to the centroid of prestressing tendons (in.)

d_p = 9.5–0.5 + 82.625–3 = 88.625"

Assume rectangular behavior:

$$c = \frac{A_{ps} f_{py}}{0.85 f'_{ce} \beta_1 b}$$

$\beta_1 = 0.85$ for $f'_{ce} \le 4000\ psi$

$\beta_1 = 0.85 - 0.05 \frac{f'_{ce} - 4000}{1000} \ge 0.65$ for $f'_{ce} > 4000\ psi$

f_c = 4.00 ksi = 1.3 * 4 = 5.2 ksi = 0.79

c = 2.17 * 243/0.85 * 5.2 * 0.79 * 81 = 1.864 "

a = 0.79 * 1.864 = 1.473" depth of the equivalent stress block (in.)

M_n = 2.17 * 243 * (88.625–1.473/2)/12 = 3862.04 kip-ft.

M_r = 1 * 3862.04 = 3862.04 kip-ft. > = 3137.61 ft-kips OK

Problem Description: A wingwall with traffic barrier is to be checked for moment capacity at a vertical section at the abutment for a vehicular impact.

AASHTO LRFD Specifications Extreme Event-II Limit State (Test Level TL-4)

$L := 15ft$	Wingwall Length	
$h := 2.5ft$	Height of wingwall at end away from pier.	
$S := 2ft$	Traffic surcharge (given in height of soil above road). See LRFD Tables 3.11.6.4-1 and 3.11.6.4-2.	
$GroundSlope := 2$	to 1	
$W := 45 \cdot \frac{lbf}{ft^2 \cdot ft}$	Lateral Earth Pressure (equilivant fluid pressure per foot)	
$F_t := 54kip$	Transverse Collision Load	§ Table A13.2-1 LRFD AASHTO
$L_t := 3.5ft$	Collision Dist. Width	§ Table A13.2-1 LRFD AASHTO
$\gamma_{CT} := 1$	Collision Load Factor	§ Table 3.4.1-1 LRFD AASHTO
$\gamma_{EH} := 1.35$	Horizontal Earth Load Factor	§ Table 3.4.1-2 LRFD AASHTO
$\gamma_{LS} := 0.5$	Live Load Surcharge Load Factor for Extreme Event II	§ Table 3.4.1-2 LRFD AASHTO

Transverse Collision Force Moment Arm

$$MomentArm := L - \frac{L_t}{2} \qquad MomentArm = 13.25\,ft$$

Wall Height at Abutment

$$H := h + \left(\frac{L}{GroundSlope}\right) \qquad H = 10.00\,ft$$

Flexural Moment due to Collision Load and Earth Pressure

$$FlexuralMoment := \gamma_{CT} \cdot F_t \cdot MomentArm + \gamma_{EH} \cdot \frac{W \cdot L^2}{24} \cdot \left[3 \cdot h^2 + \left(H + 4 \cdot S \cdot \frac{\gamma_{LS}}{\gamma_{EH}}\right) \cdot (H + 2 \cdot h)\right]$$

$$FlexuralMoment = 836.92\,kip \cdot ft$$

$$M_u := \frac{FlexuralMoment}{H} \qquad M_u = 83.69 \frac{kip \cdot ft}{ft}$$

Problem Description: A wingwall with traffic barrier is to be checked for moment capacity at a vertical section at the abutment for a vehicular impact.

AASHTO LRFD Specifications Extreme Event-II Limit State (Test Level TL-4)

$L := 15ft$	Wingwall Length	
$h := 2.5ft$	Height of wingwall at end away from pier.	
$S := 2ft$	Traffic surcharge (given in height of soil above road). See LRFD Tables 3.11.6.4-1 and 3.11.6.4-2.	
$GroundSlope := 2$	to 1	
$W := 45 \cdot \frac{lbf}{ft^2 \cdot ft}$	Lateral Earth Pressure (equilivant fluid pressure per foot)	
$F_t := 54kip$	Transverse Collision Load	§ Table A13.2-1 LRFD AASHTO
$L_t := 3.5ft$	Collision Dist. Width	§ Table A13.2-1 LRFD AASHTO
$\gamma_{CT} := 1$	Collision Load Factor	§ Table 3.4.1-1 LRFD AASHTO
$\gamma_{EH} := 1.35$	Horizontal Earth Load Factor	§ Table 3.4.1-2 LRFD AASHTO
$\gamma_{LS} := 0.5$	Live Load Surcharge Load Factor for Extreme Event II	§ Table 3.4.1-2 LRFD AASHTO

Transverse Collision Force Moment Arm

$$MomentArm := L - \frac{L_t}{2} \qquad MomentArm = 13.25\,ft$$

Wall Height at Abutment

$$H := h + \left(\frac{L}{GroundSlope}\right) \qquad H = 10.00\,ft$$

Flexural Moment due to Collision Load and Earth Pressure

$$FlexuralMoment := \gamma_{CT} \cdot F_t \cdot MomentArm + \gamma_{EH} \cdot \frac{W \cdot L^2}{24} \cdot \left[3 \cdot h^2 + \left(H + 4 \cdot S \cdot \frac{\gamma_{LS}}{\gamma_{EH}}\right) \cdot (H + 2 \cdot h)\right]$$

$$FlexuralMoment = 836.92\,kip \cdot ft$$

$$M_u := \frac{FlexuralMoment}{H} \qquad M_u = 83.69 \frac{kip \cdot ft}{ft}$$

Define Units $ksi \equiv 1000 \cdot psi$ $kip \equiv 1000 \cdot lbf$ $kcf \equiv kip \cdot ft^{-3}$ $klf \equiv 1000 \cdot lbf \cdot ft^{-1}$

$MPa \equiv Pa \cdot 10^{6}$ $N \equiv 1 \cdot newton$ $kN \equiv 1000 \cdot N$

Find the flexural strength of a W83G girder made composite with a 7.50 in. thick cast-in-place deck, of which the top 0.50 in. is considered to be a sacrificial wearing surface. The girder spacing is 6.0 ft. To simplify the calculations, ignore the contribution of any non-prestressed reinforcing steel and the girder top flange. The girder configuration is shown in **Figure 1** with 70-0.6 in. diameter strands, and concrete strengths of 6000 psi in the deck and 15000 psi in the girder.

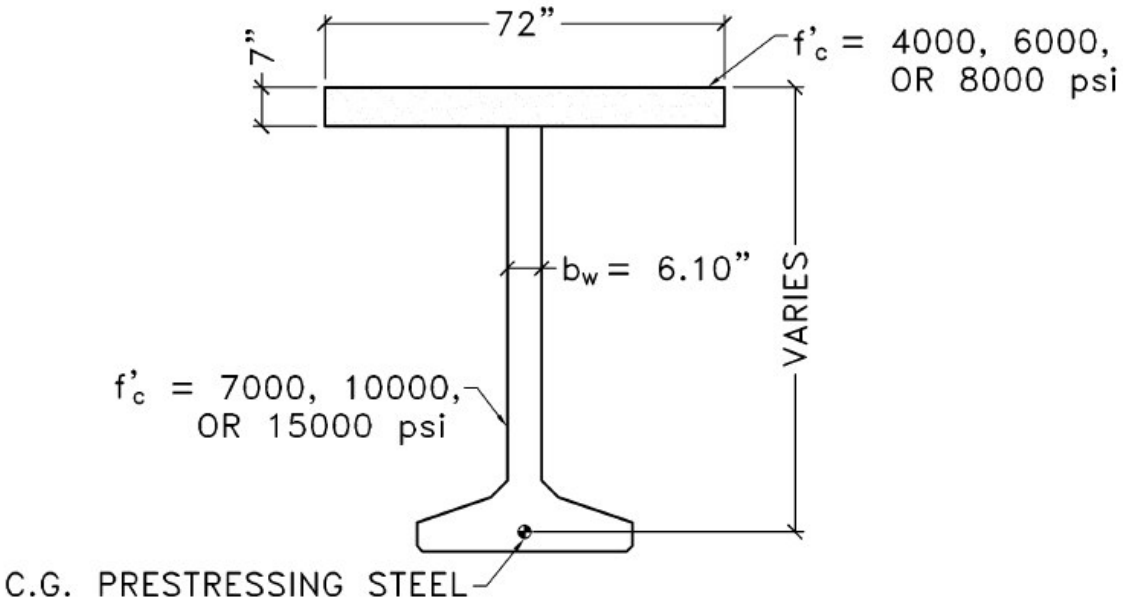

Figure 1

Bare W83G Bridge Girder Data

Depth of girder	h = 82.68 in.
Width of girder web	b_w = 6.10 in.
Area of prestressing steel	A_{ps} = 15.19 in.^{2}
Specified tensile strength of prestressing steel	f_{pu} = 270.00 ksi
Initial jacking stress	f_{pj} = 202.50 ksi
Effective prestress after all losses	f_{pe} = 148.00 ksi
Modulus of Elasticity of prestressing steel	E_p = 28,600 ksi

Design concrete strength $f'_c = 15000$ psi

Composite W83G Bridge Girder Data

Overall composite section depth $H = 89.68$ in.

Deck slab width $b = 72.00$ in.

Deck slab thickness $t = 7.50$ in.

Structural deck slab thickness $h_f = 7.00$ in.

Depth to centroid of prestressing steel $d_p = 85.45$ in.

Design concrete strength $f'_c = 6000$ psi

$$\varepsilon_{ps} = 0.003\left(\frac{d_p}{c} - 1\right) + \left(\frac{f_{pe}}{E_p}\right) = 0.003\left(\frac{85.45}{30.75} - 1\right) + \left(\frac{148.00}{28{,}600}\right)$$

$$f_{si} = \varepsilon_{ps}\left[887 + \frac{27{,}613}{\left(1 + \left(112.4\varepsilon_{ps}\right)^{7.36}\right)^{1/7.36}}\right] \leq$$

$$= (0.010511)\left[887 + \frac{27{,}613}{\left(1 + (112.4(0.010511))^{7.36}\right)^{1/7.36}}\right]$$

$$\sum A_{si}F_{si} = A_{ps}f_{si} = (15.19)(246.56) \quad a = \beta_{1(ave)}c = (0.719)(30.75)$$

$$\beta_{1(ave)} = \sum_j \left(f'_c A_c \beta_1\right)_j \Big/ \sum_j \left(f'_c A_c\right)_j = \frac{[(6)(7)(72)(0.75) + (15)(22.1-7)(6.10)(0.65)]}{[6(7)(72) + (15)(22.1-7)(6.10)]}$$

$$\sum F_{cj} = 0.85f'_{c(deck)}h_f b + 0.85f'_{c(girder)}\left(a - h_f\right)b_w$$
$$= 0.85(6)(7)(72) + 0.85(15)(22.10-7)(6.10)$$

$$M_n = 0.85f'_{c(deck)}h_f b\left(d_p - \frac{h_f}{2}\right) + 0.85f'_{c(girder)}\left(a - h_f\right)b_w\left(d_p - h_f - \frac{\left(a - h_f\right)}{2}\right)$$

$$= 0.85(6)(7)(72)\left(85.45 - \frac{7}{2}\right) + 0.85(15)(22.1-7)(6.10)\left(85.45 - 7 - \frac{(22.1-7)}{2}\right)$$

$$d_t = H - 2 = 89.68 - 2 \quad \phi = 0.5 + 0.3\left(\frac{d_t}{c} - 1\right) = 0.5 + 0.3\left(\frac{87.68}{30.75} - 1\right)$$

$$\phi M_n = 1.00(293{,}931)\ \varepsilon_{ps} = 0.003\left(\frac{d_p}{c} - 1\right) + \left(\frac{f_{pe}}{E_p}\right) = 0.003\left(\frac{85.45}{32.87} - 1\right) + \left(\frac{148.00}{28{,}600}\right)$$

$$f_{si} = \varepsilon_{ps}\left[887 + \frac{27{,}613}{\left(1 + \left(112.4\varepsilon_{ps}\right)^{7.36}\right)^{1/7.36}}\right] \leq$$

$$= (0.009974)\left[887 + \frac{27{,}613}{\left(1 + (112.4(0.009974))^{7.36}\right)^{1/7.36}}\right]$$

$$\sum A_{si}F_{si} = A_{ps}f_{si} = (15.19)(242.83)\ a = \beta_1 c = (0.65)(32.87)$$

$$\sum F_{cj} = 0.85f'_{c(deck)}h_f b + 0.85f'_{c(girder)}\left(a - h_f\right)b_w$$
$$= 0.85(6)(7)(72) + 0.85(15)(21.37 - 7)(6.10)$$

$$M_n = 0.85f'_{c(deck)}h_f b\left(d_p - \frac{h_f}{2}\right) + 0.85f'_{c(girder)}\left(a - h_f\right)b_w\left(d_p - h_f - \frac{\left(a - h_f\right)}{2}\right)$$

$$= 0.85(6)(7)(72)\left(85.45 - \frac{7}{2}\right) + 0.85(15)(21.37 - 7)(6.10)\left(85.45 - 7 - \frac{(21.37 - 7)}{2}\right)$$

$$d_t = H - 2 = 89.68 - 2\ \phi = 0.5 + 0.3\left(\frac{d_t}{c} - 1\right) = 0.5 + 0.3\left(\frac{87.68}{32.87} - 1\right)$$

$$\phi M_n = 1.00(290{,}323)$$

Flexural Strength – Strain Compatibility with Non-Linear Concrete Stress Block

The concrete stress-strain curves for both the deck and girder concrete are taken from Collins and Mitchell (see BDM 5.1.1).. The “power formula” of the PCI BDM (se BDM 5.1.3) is used to determine the stress in the prestressing steel for each iteration.

The concrete compression block is divided into (100) slices, (21) equal slices in the flange and (79) equal slices in the web for this case. The strain at the center of each slice was used to determine the average stress within that slice, which was multiplied by the area of the slice to determine the force in each slice.

The product of these forces and the distance to the center of each force from the top of the deck was used to calculate the resultant forces and eccentricities in the flange and

web. Example calculations for the stresses in the slice at the top of the deck, at the interface between the deck and girder, and the prestressing steel are as follows:

For the deck concrete,

$$E_c = \frac{\left(40{,}000\sqrt{f_c'} + 1{,}000{,}000\right)}{1000} = \frac{\left(40{,}000\sqrt{6000} + 1{,}000{,}000\right)}{1000}$$

$= 4098$ ksi

$$n = 0.8 + \frac{f_c'}{2500} = 0.8 + \frac{6000}{2500} = 3.20$$

$$k = 0.67 + \frac{f_c'}{9000} = 0.67 + \frac{6000}{9000} = 1.337$$

$$\varepsilon_c' \times 1000 = \frac{f_c'}{E_c}\frac{n}{n-1} = \frac{6000}{4098}\frac{3.2}{3.2-1} = 2.129$$

For the top slice of deck,

$$y = \frac{7}{21(2)} = 0.167 \text{ in.}$$

$$\varepsilon_{cf} = \frac{0.003}{c}(c-y) = \frac{0.003}{34.42}(34.42-0.167) = 0.002985$$

$$f_c = (f_c')\frac{n(\varepsilon_{cf}/\varepsilon_c')}{n-1+(\varepsilon_{cf}/\varepsilon_c')^{nk}} = (6)\frac{3.2(0.002985/0.002129)}{3.2-1+(0.002985/0.002129)^{3.2(1.337)}}$$

$= 4.18$ ksi (28.8 MPa)

The contribution of this slice to the overall resultant compressive force is

$$C_1 = (4.18ksi)(72in)\left(\frac{7}{21}in\right) = 100.32kip$$

For bottom slice of deck,

$$y = \frac{7}{21}(20) + \frac{7}{21(2)} = 6.833 \text{ in.}$$

$$\varepsilon_{cf} = \frac{0.003}{c}(c-y) = \frac{0.003}{34.42}(34.42-6.833) = 0.002404$$

$$f_c = (f_c')\frac{n(\varepsilon_{cf}/\varepsilon_c')}{n-1+(\varepsilon_{cf}/\varepsilon_c')^{nk}} = (6)\frac{3.2(0.002404/0.002129)}{3.2-1+(0.002404/0.002129)^{3.2(1.337)}}$$

$= 5.59$ ksi

The contribution of this slice to the overall resultant compressive force is

$$C_{21} = (5.59ksi)(72in)\left(\frac{7}{21}in\right) = 134.16kip$$

For girder concrete,

$$E_c = \frac{\left(40{,}000\sqrt{f_c'} + 1{,}000{,}000\right)}{1000} = \frac{\left(40{,}000\sqrt{15000} + 1{,}000{,}000\right)}{1000}$$

= 5899 ksi (40674 MPa)

$$n = 0.8 + \frac{f_c'}{2500} = 0.8 + \frac{15000}{2500} = 6.80$$

$$k = 0.67 + \frac{f_c'}{9000} = 0.67 + \frac{15000}{9000} = 2.337$$

$$\varepsilon_c' \times 1000 = \frac{f_c'}{E_c}\frac{n}{n-1} = \frac{15000}{5899}\frac{6.8}{6.8-1} = 2.981$$

For the top slice of girder,

$$y = 7 + \frac{27.42}{79(2)} = 7.174 \text{ in.}$$

$$\varepsilon_{cf} = \frac{0.003}{c}(c - y) = \frac{0.003}{34.42}(34.42 - 7.174) = 0.002375$$

Since $\varepsilon_{cf}/\varepsilon_c' = 0.002375/0.002981 = 0.797 < 1.0,\ k = 1.0$

$$f_c = (f_c')\frac{n(\varepsilon_{cf}/\varepsilon_c')}{n - 1 + (\varepsilon_{cf}/\varepsilon_c')^{nk}} = (15)\frac{6.8(0.002375/0.002981)}{6.8 - 1 + (0.002375/0.002981)^{6.8(1.0)}}$$

= 13.51 ksi

The contribution of this slice to the overall resultant compressive force is

$$C_{22} = (13.51ksi)(6.10in)\left(\frac{34.42 - 7.0}{79}in\right) = 28.60kip$$

For the prestressing steel:

$$\varepsilon_{ps} = 0.003\left(\frac{d_p}{c} - 1\right) + \left(\frac{f_{pe}}{E_p}\right) = 0.003\left(\frac{85.45}{34.42} - 1\right) + \left(\frac{148}{28500}\right) = 0.00964$$

$$f_{ps} = \varepsilon_{ps}\left[887 + \frac{27{,}613}{\left(1+\left(112.4\varepsilon_{ps}\right)^{7.36}\right)^{1/7.36}}\right] \le 270\,ksi$$

$$f_{ps} = (0.00964)\left[887 + \frac{27{,}613}{\left(1+\left(112.4\times 0.00964\right)^{7.36}\right)^{1/7.36}}\right] = 239.93ksi$$

The resultant force in the prestressing steel is

$T = (239.93ksi)(15.19in^2) = 3644.6kip$

The overall depth to the neutral axis, c, was varied until the sum of the compressive force in all the concrete slices equaled the tension force in the prestressing steel. Equilibrium was achieved at a compressive force in the slab of 2473 kip, 3.68" below the top of slab and a compressive force in the girder of 1169kip, 16.20" below the top of slab. Summing moments about the centroid of the prestressing steel,

$M_n = 2473(85.45 - 3.68) + 1169(85.45 - 7 - 9.20) = 283{,}170$ kip-in.

To calculate ϕ,

Assume the lowest row of prestressing strands is located 2" from the bottom of the girder. The depth to the extreme strands is

$d_t = H - 2 = 89.68 - 2 = 87.68$ in.

$$\phi = 0.5 + 0.3\left(\frac{d_t}{c} - 1\right) = 0.5 + 0.3\left(\frac{87.68}{34.42} - 1\right) = 0.96$$

$\phi M_n = 0.96(283{,}170) = 273{,}034$ kip-in.

Effects of Refinement – Strain Compatibility Analysis

A significant amount of additional capacity may be realized for this member by including the top flange of the W83G girder. The top flange is 49" wide and approximately 6" deep. The large area and high strength of the top flange provide a considerable compression contribution to the capacity analysis. The resulting depth to neutral axis, c, is 13.6" and the nominal capacity, Mn, is 321,362 kip-in. The capacity reduction factor is 1.0. Accounting for the top flange results in 14% additional capacity.

The hammerhead pier shown in Figure 5.1 consists of a rectangular pier and a variable depth cap beam that supports 5 lines of precast, pretensioned girders. The girders sit on neoprene pads, which in turn are supported by concrete bearing blocks having dimensions of 18 x 36 in. The Strength I factored loads acting on the 5 bearing blocks include allowances for the factored self-weight of the cap beam.

The specified concrete compressive strength, f_c', is 4 ksi and the specified yield strength of the reinforcing steel is 60 ksi.

Design the hammerhead pier using the AASHTO LRFD Specifications.

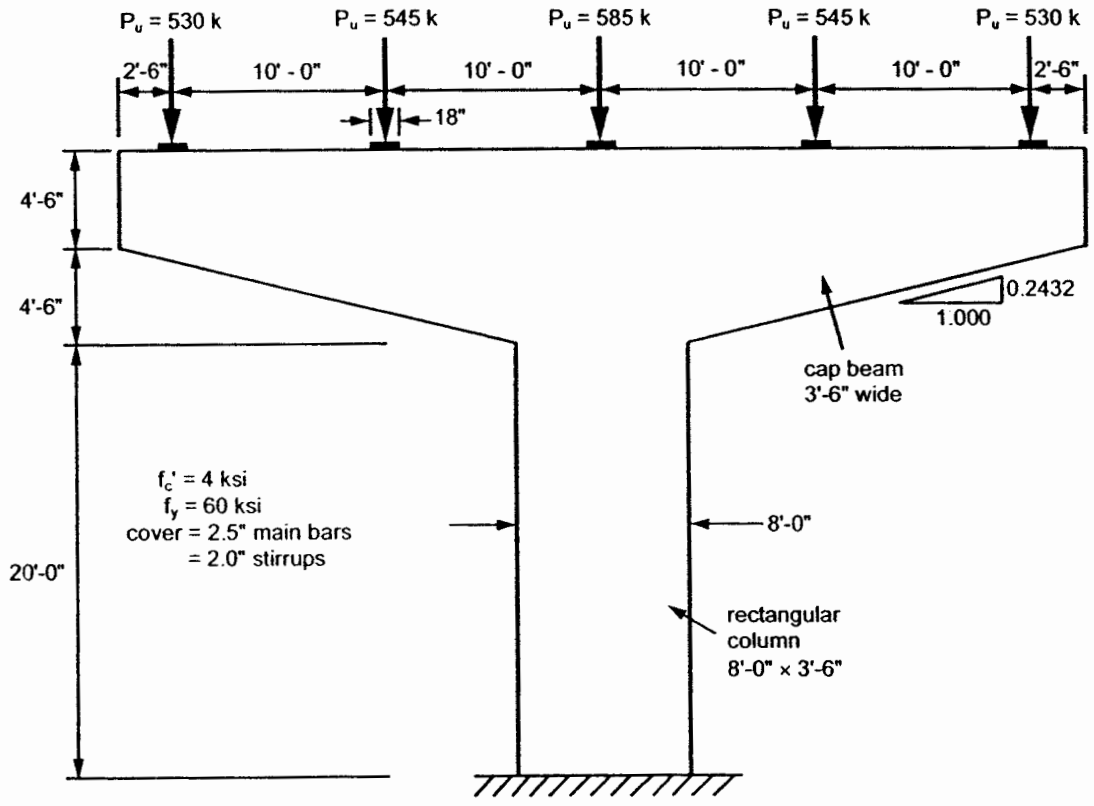

Figure 5.1. Details of hammerhead pier.

The three central loads are located at a distance which is less than twice the member depth from the supporting reaction. Hence the central 20 ft of the hammerhead pier is a D-Region and will be designed using the strut-and-tie method. The outer portions of the hammerhead pier are flexural regions (B-Regions) which can be designed for shear using either the sectional model or the strut-and-tie model. For this example, the strut-and-tie model will be used.

§5.6.3

§5.8.1.1

Step 1 - Draw Idealized Truss Model and Solve for Member Forces

The idealized truss model shown in Figure 5.2 represents the flow of forces in the hammerhead pier. The dashed lines coincide with the centerlines of the compressive struts that represent compressive stresses in different areas of the concrete. The solid lines coincide with the centroids of tension ties, which represent tension forces in different groups of reinforcing bars.

Under the action of the girder loads the ends of the cap beam will bend down causing tension near the top face of the hammerhead pier and compression near the sloping bottom faces. To allow appropriate room for placement of the longitudinal reinforcement, it has been assumed that the centroid of the tension tie near the top face is located 6 in. below the top face. To provide an appropriate space for the concrete compression zone, it has been assumed that the centerline of the bottom compression strut is located 9 in. above the sloping bottom face and is parallel to this face. The compression force in the pier is represented by 3 vertical struts. The central strut carries the 585 kip load, while the outer two struts carry 1075 kips each. Assuming that the pier is subjected to uniform compressive stresses, the width of each outer strut must be:

$$\frac{1075}{585+2\times1075}\times 8 = 3.14 \text{ ft}$$

Hence the centerline of the outer struts will be $0.50\times 3.14 = 1.57$ ft from the outer faces of the pier.

The distributed stirrups in the cap beam are represented by the vertical tension Ties AB, CD, EF, and GH. To solve the statics of the truss model it is convenient to know the lengths of these 4 truss members. As can be seen from Figure 5.1 and Figure 5.2, the vertical distance between the top tie, ACEG, and the bottom strut, BDFH, increases by 0.2432 ft for every additional foot travelled away from the free end of the cantilever. As shown in Figure 5.2, the resulting lengths of the 4 vertical ties are 3.858 ft, 5.074 ft, 6.29 ft., and 8.132 ft.

The member forces shown in Figure 5.2 were determined by the method of joints. Thus at Joint A, the vertical component from Member AD must push the joint upwards with 530 kips. The member must also push the joint to the left with a force of $530\times 5.00/5.074 = 522$ kips. The square root of the sum of the squares of these two components is the force in Member AD, namely a compression of 744 kips. Member AC must have a tension force of 522 kips to balance the horizontal component of Member AD. Considering horizontal and vertical equilibrium for Joints D, C, F, E, H, and G enables all of the member forces to be computed.

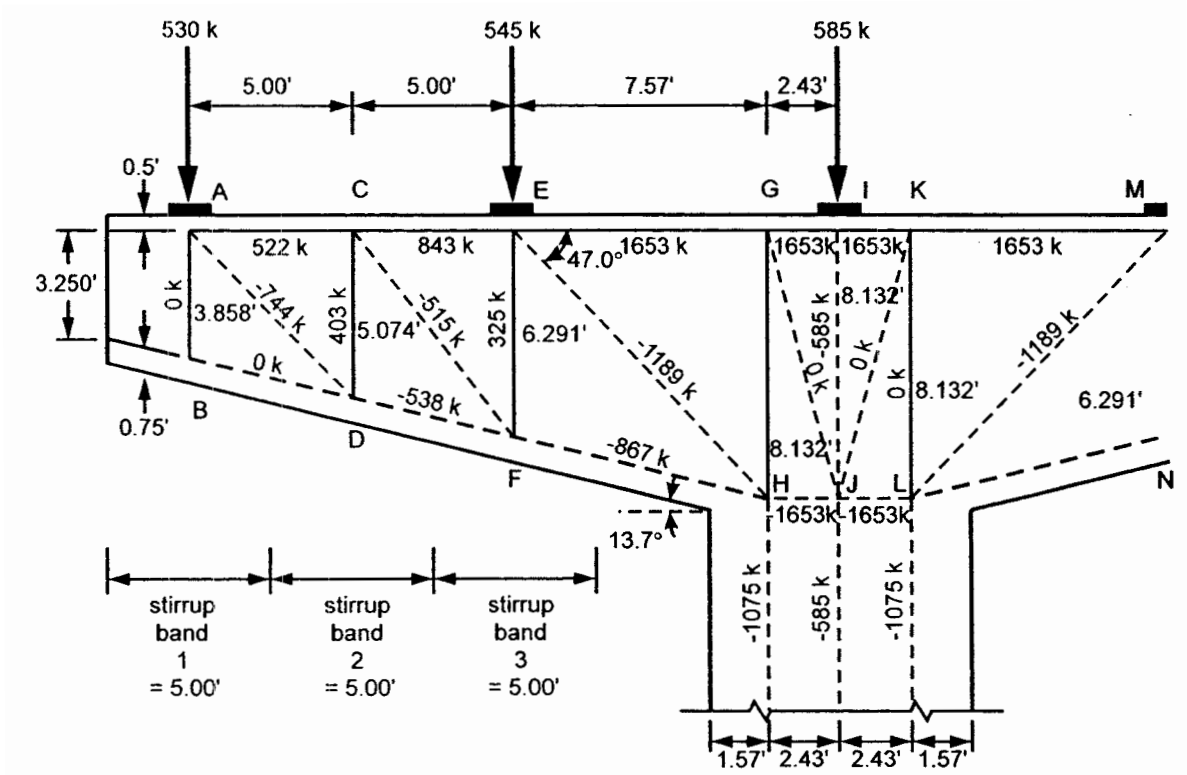

Figure 5.2. Truss idealization.

It is of interest to note that the vertical component of the compression force in the sloping bottom strut, BDFH, carries a significant portion of the vertical shear force. Thus if Member BDFH were horizontal, the forces in Members CD and EF, which represent the tensions in the stirrups, would both be 530 kips, rather than 403 kips and 325 kips, respectively.

Step 2 – Check Size of Bearings

The concrete in the vicinity of Joint E, that is nodal region E, must anchor vertical Tie EF and horizontal Ties EC and EG. The bearing stress on such a region (CTT node) is limited to $0.65\phi f_c'$. Hence the minimum bearing area required to support the 545 kip load is: §5.6.3.5

$$\text{bearing area required} = \frac{P_u}{0.65\phi f_c'} = \frac{545}{0.65 \times 0.70 \times 4} = 299 \text{ in.}^2$$

Therefore, the bearing area chosen, 18 x 36 in., is satisfactory (648 in.^{2}).

Step 3 – Design Reinforcement for Main Tension Tie ACEGI

(a) At the highest tension locations, EGI

The required area of tension tie reinforcement, A_{st}, is:

$$A_{st} = \frac{P_u}{\phi f_y} = \frac{1653}{0.9 \times 60} = 30.61 \text{ in.}^2$$ §5.6.3.4.1

Use 20 No. 11 bars, $A_{st} = 20 \times 1.56 = 31.2 \text{ in.}^2$

As shown in Figure 5.3, the required 20 No. 11 bars can be provided in 2 layers of 10 bars. If No. 5 stirrups are used the centroid of the 20 No. 11 bars will be about 4.7 in. from the top face. Hence the assumption that the centroid of the tension tie would be 6 in. below the top face was conservative.

(b) At lowest tension location, AC

The required area of tension tie reinforcement is: §5.6.3.4.1

$$A_{st} = \frac{P_u}{\phi f_y} = \frac{522}{0.9 \times 60} = 9.67 \text{ in.}^2$$

Therefore, use 8 No. 11 bars, $A_{st} = 8 \times 1.56 = 12.48 \text{ in.}^2$.

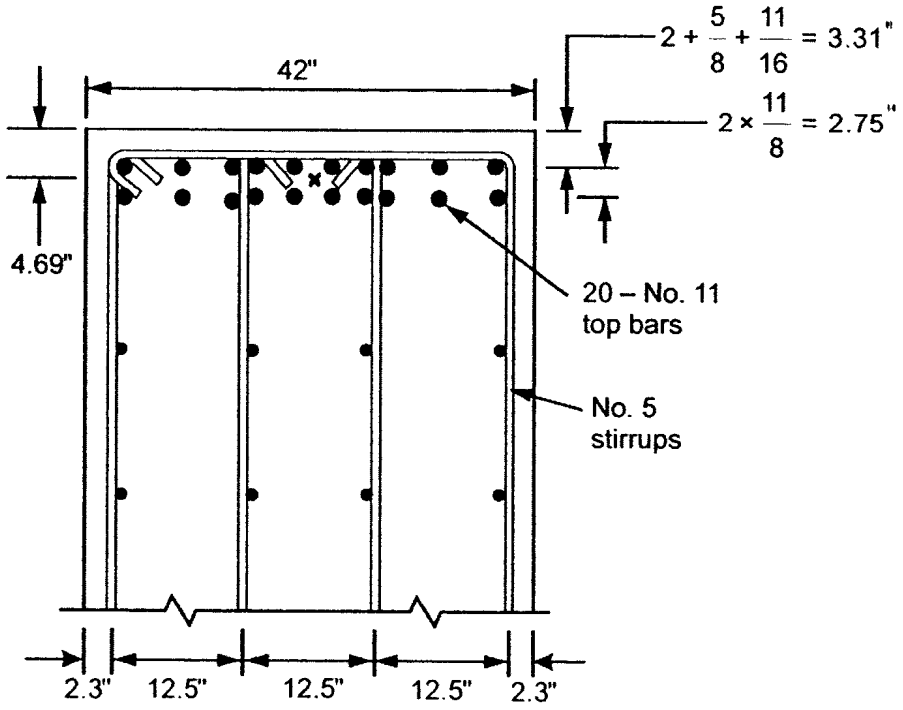

Figure 5.3. Layout of 20 – No. 11 top bars near pier.

(c) Development of bars

The development length for a straight top horizontal No. 11 bar with $f_y = 60$ ksi and $f_c' = 4$ ksi is 82 in. If 90° hooks with at least 2.5 in. of side cover are used the development length is reduced to 19 in. Hence terminate the 10 bars in the lower layer at a location 19 in. beyond point E. Terminate the remaining 10 bars with 90° hooks at a location 27 in. beyond point A. §5.11.2.1 §5.11.2.4

Step 4 – Design Tension Ties Representing Stirrups

Try using No. 5 stirrups with 4 legs (see Figure 5.3).

(a) Stirrup spacing required for Tie CD

Vertical Tie CD has the highest tension. Hence the number of stirrups required in stirrup band 2 (see Figure 5.2), is:

$$n = \frac{P_u}{\phi A_{st} f_y} = \frac{403}{0.9 \times 4 \times 0.31 \times 60} = 6.02$$ §5.6.3.4.1

Hence, the required spacing, s, within the 5-ft band is:

$$s \le \frac{60}{6.02} = 9.97 \text{ in.}$$

Try a spacing of 9 in.

In the flexural region between A and E the minimum transverse reinforcement, assuming a stirrup spacing of 9 in., is:

$$A_v = 0.0316\sqrt{f_c'}\,\frac{b_v s}{f_y} = 0.0316 \times \sqrt{4} \times \frac{42 \times 9}{60} = 0.39 \text{ in.}^2$$ §5.8.2.5

Since $A_v = 4 \times 0.31 = 1.24 \text{ in.}^2$, an amount greater than minimum has been provided in stirrup band 2 (see Figure 5.2). While No. 5 stirrups with 2 legs could be used in stirrup band 1, which will be governed by the minimum area requirement, it would be more practical to continue the 4-legged No. 5 stirrups at a spacing of 9 in. throughout this region.

(b) Stirrup spacing required for Tie EF

Vertical Tie EF must resist a tension of 325 kips. Hence the number of stirrups required in stirrup band 3 (see Figure 5.2), is:

$$n = \frac{P_u}{\phi A_{st} f_y} = \frac{325}{0.9 \times 4 \times 0.31 \times 60} = 4.85$$ §5.6.3.4.1

Hence, the required spacing, s, within the 5-ft band is:

$$s \le \frac{60}{4.85} = 12.37 \text{ in.}$$

Try a spacing of 12 in.

For crack control in this disturbed region, the ratio of reinforcement area to cross-sectional area shall not be less than 0.003 in both the vertical and horizontal directions. Hence: §5.6.3.6

$$\frac{A_{st}}{bs} \ge 0.003$$

Therefore:

$$s \le \frac{A_{st}}{0.003\, b} = \frac{4 \times 0.31}{0.003 \times 42} = 9.84 \text{ in.}$$

Thus use No. 5 stirrups with 4 legs spaced at 9 in. throughout the length of the beam.

Step 5 – Check Capacity of Bottom Strut BDFH

The highest compressive force in the bottom Strut BDFH is 867 kips in Member FH (see Figure 5.2).

As this strut will be crossed by vertical stirrups, the compressive capacity of this strut may need to be reduced. The area of Tie EF is $(60/9) \times 4 \times 0.31 = 8.27 \text{ in.}^2$. Hence the strain in this stirrup under the 325 kip tension is:

$$\varepsilon_s = \frac{P_u}{A_{st} E_s} = \frac{325}{8.27 \times 29{,}000} = 1.36 \times 10^{-3}$$

As the smallest angle between the strut and the tension tie is 90 - 13.7 = 76.3°, the principal strain, ε_1, can be determined as: §5.6.3.3.3

$$\varepsilon_1 = \varepsilon_s + (\varepsilon_s + 0.002)\cot^2 \alpha_s = 1.36 \times 10^{-3} + (1.36 \times 10^{-3} + 0.002)\cot^2 76.3^0 = 1.56 \times 10^{-3}$$

And, the limiting compressive stress, f_{cu}, in the strut is: §5.6.3.3.3

$$f_{cu} = \frac{f_c'}{0.8 + 170\,\varepsilon_1} \le 0.85 f_c' = \frac{4}{0.8 + 170 \times 1.56 \times 10^{-3}} = 3.76 \text{ ksi} \le 0.85 \times 4 = 3.40 \text{ ksi}$$

The centroid of the strut was assumed to be at 9 in. vertically from the bottom face (see Figure 5.2); hence the thickness of the strut perpendicular to the sloping bottom face is $2 \times 9 \times \cos 13.7^\circ = 17.5$ in. The nominal resistance of the strut is:

$$P_n = f_{cu} A_{cs} = 3.40 \times 42 \times 17.5 = 2499 \text{ kips}$$ §5.6.3.3.1

The factored resistance of the strut is:

$$P_r = \phi P_n = 0.70 \times 2499 = 1749 \text{ kips}$$ §5.6.3.2

As the factored resistance exceeds the 867 kip compression due to factored loads, the strut capacity is adequate.

While the truss geometry could be adjusted by reducing the thickness of the bottom strut and the member forces recalculated, the changes in forces will be rather small, resulting in perhaps the saving of only one bar in the main tension tie. Thus the original conservative assumptions are acceptable.

Step 6 – Check Capacity of Diagonal Struts of AD, CF, and EH

Of the three diagonal struts crossing the web, AD, CF, and EH, Member EH has the highest compression. The details of the member at end E, where it crosses the tension ties, are shown in Figure 5.4.

The strains in Ties CE and EG due to factored loads are shown in Figure 5.3. For determining the strut capacity, the average value of these two strains has been assumed, giving $\varepsilon_s = 1.85 \times 10^{-3}$.

The principal strain, ε_1, can be determined as: §5.6.3.3.3

$$\varepsilon_1 = \varepsilon_s + (\varepsilon_s + 0.002)\cot^2 \alpha_s = 1.85 \times 10^{-3} + (1.85 \times 10^{-3} + 0.002)\cot^2 47.0^0 = 5.20 \times 10^{-3}$$

and the limiting compressive stress, f_{cu}, in the strut is: §5.6.3.3.3

$$f_{cu} = \frac{f_c'}{0.8 + 170\,\varepsilon_1} \le 0.85 f_c' = \frac{4}{0.8 + 170 \times 5.20 \times 10^{-3}} = 2.38 \text{ ksi} \le 0.85 \times 4 = 3.40 \text{ ksi}$$

The cross-sectional dimension of strut EH in the plane of the pier is 19.6 in. (see Figure 5.4), while the effective thickness of the strut at end E could be conservatively taken as 36 in. which is the width of the bearing block. However, the good anchorage conditions provided by the No. 11 bars in the corner of the stirrups enable the effective thickness of the strut to be increased. §5.6.3.3.2

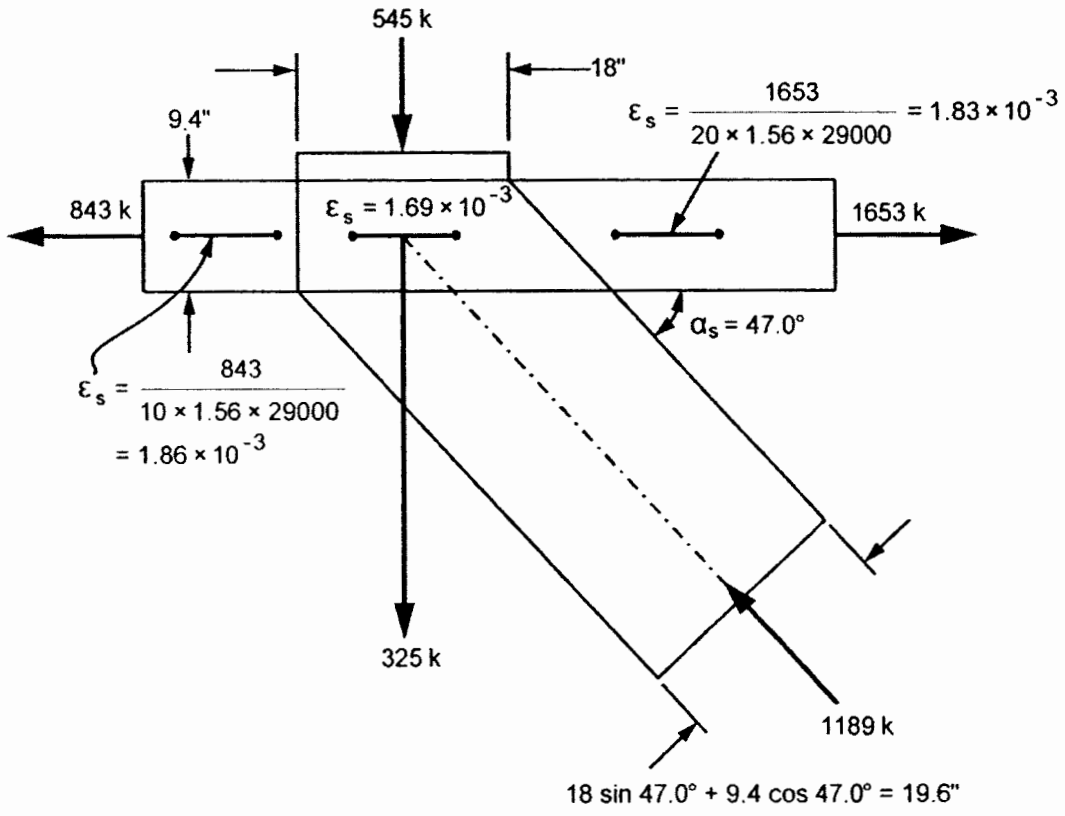

Figure 5.4. Details of Strut EH near Node E.

As can be seen from Figure 5.3, the center-to-center distance of the vertical stirrups across the 42-in. width of the hammerhead pier is 12.5 in. As this distance is less than $2 \times 6d_{ba} = 2 \times 6 \times 1.410 = 16.9$ in., the full 42-in. width of the pier cap is effective. Hence the nominal resistance of the strut is:

$$P_n = f_{cu} A_{cs} = 2.38 \times 42 \times 19.6 = 1959 \text{ kips}$$ §5.6.3.3.1

The factored resistance of the strut is:

$$P_r = \phi P_n = 0.70 \times 1959 = 1357 \text{ kips} \geq 1189 \text{ kips required}$$

Therefore, the strut capacity is adequate.

Step 7 – Provide Crack Control Reinforcement

In Step 4, the stirrup spacing was adjusted to satisfy the crack control requirements for reinforcement in the vertical direction, but crack control reinforcement also must be provided in the horizontal direction. The vertical spacing between these horizontal bars must not exceed 12 in. If this maximum spacing is used, the area of horizontal bars in each layer needs to be: §5.6.3.6

$$A_{st} = 0.003bs = 0.003 \times 12 \times 42 = 1.51 \text{ in.}^2$$

Therefore, use 4 No. 6 horizontal bars at 12 in. spacing ($4 \times 0.44 = 1.76$ in.^{2} provided), arranged as shown in Figure 5.5.

Step 8 – Sketch the Required Reinforcement

The resulting reinforcement for the hammerhead pier is shown in Figure 5.5. For clarity the pier reinforcement is not shown.

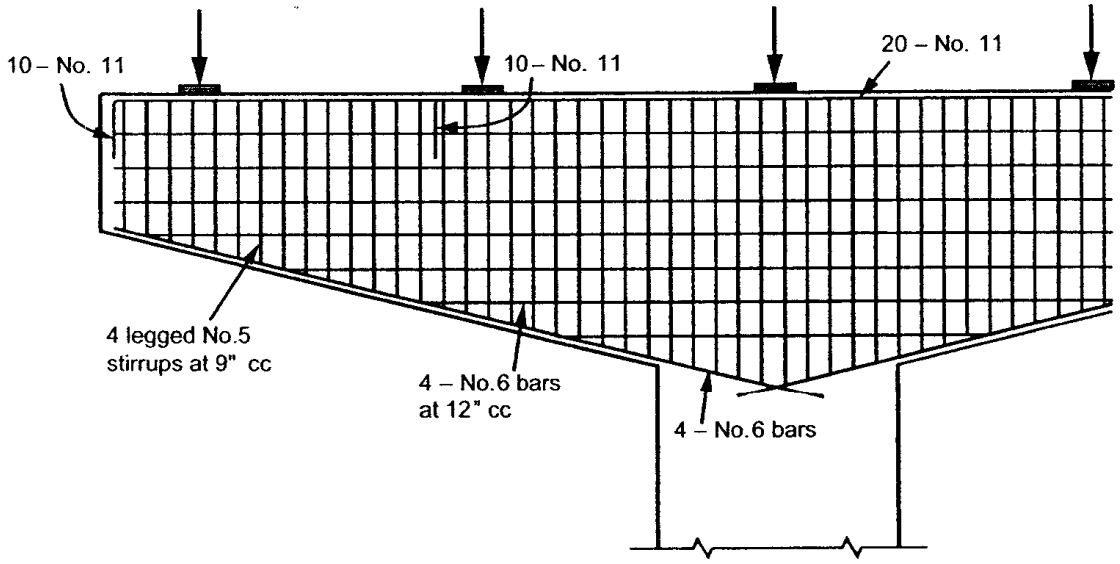

Figure 5.5. Reinforcement details for hammerhead pier.

Define Units:

$ksi \equiv 1000 \cdot psi$ $kip \equiv 1000 \cdot lbf$ $kcf \equiv kip \cdot ft^{-3}$ $klf \equiv kip \cdot ft^{-1}$

Problem Description:

Find the torsion and shear capacity of a reinforced concrete beam of width 37in and height 90in. Clear cover for all sides equals 1.625in. Shear and torsion reinforcement consists of #6 stirrups spaced at 5in. Longitudinal moment steel consists of 4 #18 bars in one row in the top and in the bottom. Factored loads are V_u = 450 kips and T_u = 500 kip-ft.

Concrete Properties:

$f'c := 4 \cdot ksi$

Reinforcement Properties:

Bar Diameters:

$$dia(bar) := \begin{cases} 0.375 \cdot in & \text{if } bar = 3 \\ 0.500 \cdot in & \text{if } bar = 4 \\ 0.625 \cdot in & \text{if } bar = 5 \\ 0.750 \cdot in & \text{if } bar = 6 \\ 0.875in & \text{if } bar = 7 \\ 1.000in & \text{if } bar = 8 \\ 1.128in & \text{if } bar = 9 \\ 1.270in & \text{if } bar = 10 \\ 1.410in & \text{if } bar = 11 \\ 1.693in & \text{if } bar = 14 \\ 2.257in & \text{if } bar = 18 \end{cases}$$

Bar Areas:

$$A_b(bar) := \begin{cases} 0.11 \cdot in^2 & \text{if } bar = 3 \\ 0.20 \cdot in^2 & \text{if } bar = 4 \\ 0.31 \cdot in^2 & \text{if } bar = 5 \\ 0.44 \cdot in^2 & \text{if } bar = 6 \\ 0.60 \cdot in^2 & \text{if } bar = 7 \\ 0.79 \cdot in^2 & \text{if } bar = 8 \\ 1.00 \cdot in^2 & \text{if } bar = 9 \\ 1.27 \cdot in^2 & \text{if } bar = 10 \\ 1.56 \cdot in^2 & \text{if } bar = 11 \\ 2.25 \cdot in^2 & \text{if } bar = 14 \\ 4.00 \cdot in^2 & \text{if } bar = 18 \end{cases}$$

$f_y := 40 \cdot ksi$

$E_s := 29000ksi$ LRFD 5.4.3.2

$E_p := 28500ksi$ LRFD 5.4.4.2 for strands

$bar_{LT} := 18$ Longitudinal - Top

$bar_{LB} := 18$ Longitudinal - Bottom

$bar_T := 6$ Transverse

$s := 5 \cdot in$ Spacing of Transverse Reinforcement

$d_{LT} := dia(bar_{LT})$ $d_{LT} = 2.257\,in$ $A_{LT} := A_b(bar_{LT})$ $A_{LT} = 4\,in^2$

$d_{LB} := dia(bar_{LB})$ $d_{LB} = 2.257\,in$ $A_{LB} := A_b(bar_{LB})$ $A_{LB} = 4\,in^2$

$d_T := dia(bar_T)$ $d_T = 0.75\,in$ $A_T := A_b(bar_T)$ $A_T = 0.44\,in^2$

Beam Section Properties:

$b := 37in$ Width of Beam

$h := 90in$ Height of Beam

$bottomcover := 1.625 \cdot in$

$sidecover := 1.625 \cdot in$

$topcover := 1.625 \cdot in$

Factored Loads:

$V_u := 450 \cdot kip$

$T_u := 500 \cdot kip \cdot ft$

$M_u := 0 \cdot kip \cdot ft$

$N_u := 0 \cdot kip$

Torsional Resistance Investigation Requirement:

Torsion shall be investigated where: LRFD 5.8.2.1

$T_u > 0.25 \cdot \phi \cdot T_{cr}$

$\phi := 0.90$ For Torsion and Shear - Normal weight concrete LRFD 5.5.4.2

$A_{cp} := b \cdot h$ $A_{cp} = 3330\,in^2$

$p_c := (b + h) \cdot 2$ $p_c = 254\,in$

$f_{pc} := 0 \cdot ksi$

$$T_{cr} := 0.125 \cdot \sqrt{\frac{f'c}{ksi}} \cdot \frac{\left(\frac{A_{cp}}{in^2}\right)^2}{\left(\frac{p_c}{in}\right)} \cdot \sqrt{1 + \frac{\frac{f_{pc}}{ksi}}{0.125 \cdot \sqrt{\frac{f'c}{ksi}}}} \cdot kip \cdot in$$

$T_{cr} = 10914\,kip \cdot in$

$T_{cr} = 909.5\,kip \cdot ft$

$0.25 \cdot \phi \cdot T_{cr} = 204.6\,\text{kip} \cdot \text{ft}$

$T_u > 0.25 \cdot \phi \cdot T_{cr} = 1$ Torsion shall be investigated.

Since torsion shall be investigated, transverse reinforcement is required as per LRFD 5.8.2.4. The minimum transverse reinforcement requirement of LRFD 5.8.2.5 shall be met.

Minimum Transverse Reinforcement: LRFD 5.8.2.5

$b_v := b$ $b_v = 37\,\text{in}$ LRFD 5.8.2.9

$A_v := 2A_T$ $A_v = 0.88\,\text{in}^2$ LRFD 5.8.3.3

$A_{vmin} := 0.0316 \cdot \sqrt{\frac{f'c}{ksi}} \cdot ksi \cdot \frac{b_v \cdot s}{f_y}$ $A_{vmin} = 0.29\,\text{in}^2$

$A_v \geq A_{vmin} = 1$ OK

Equivalent Factored Shear Force: LRFD 5.8.2.1

$$p_h := 2 \cdot \left[\left[b - 2 \cdot \left(sidecover + \frac{d_T}{2} \right) \right] + \left(h - topcover - bottomcover - d_T \right) \right]$$

$p_h = 238\,\text{in}$

$$A_{oh} := \left[b - 2 \cdot \left(sidecover + \frac{d_T}{2} \right) \right] \cdot \left(h - topcover - bottomcover - d_T \right)$$

$A_{oh} = 2838\,\text{in}^2$

$A_o := 0.85 \cdot A_{oh}$ $A_o = 2412.3\,\text{in}^2$ LRFD C5.8.2.1

Equivalent Factored Shear Force:

$$V_{ust} := \sqrt{V_u^{\,2} + \left(\frac{0.9 \cdot p_h \cdot T_u}{2 \cdot A_o} \right)^2}$$ $V_{ust} = 522.9\,\text{kip}$ LRFD 5.8.2.1-6

V_{ust} shall be used to determine β and θ.

Determination of β and θ: LRFD 5.8.3.4

$d_e := h - bottomcover - d_T - \frac{d_{LB}}{2}$ $d_e = 86.5\,in$ LRFD 5.8.2.9

$d_v := \max(0.9 \cdot d_e, 0.72 \cdot h)$ $d_v = 77.85\,in$ LRFD 5.8.2.9

$V_p := 0 \cdot kip$ No Prestress Strands

$A_{ps} := 0 \cdot in^2$ No Prestress Strands

$A_s := 4 \cdot A_{LB}$ $A_s = 16\,in^2$ For 4 #18 bars

$f_{po} := 0 \cdot ksi$

$\theta := 30.5 \cdot deg$ Assume to begin iterations (then vary until convergence below)

$$\varepsilon_x := \frac{\left(\frac{|M_u|}{d_v} + 0.5 \cdot N_u + 0.5 \cdot |V_{ust} - V_p| \cdot \cot(\theta) - A_{ps} \cdot f_{po}\right)}{2 \cdot (E_s \cdot A_s + E_p \cdot A_{ps})}$$ LRFD 5.8.3.4.2-1

$\varepsilon_x \cdot 1000 = 0.478$

$v_u := \frac{|V_{ust} - \phi \cdot V_p|}{\phi \cdot b_v \cdot d_v}$ $v_u = 0.202\,ksi$ LRFD 5.8.2.9-1

$\frac{v_u}{f'c} = 0.05$

From Table 5.8.3.4.2-1, Find β and θ

$\theta := 30.5 \cdot deg$ Value is close to original guess. OK.

$\beta := 2.59$

Torsional Resistance:

The factored Torsional Resistance shall be: LRFD 5.8.2.1

$T_r = \phi \cdot T_n$

$A_t := A_T$ $A_t = 0.44\,in^2$ LRFD 5.8.3.6.2

$T_n := \frac{2 \cdot A_o \cdot A_t \cdot f_y \cdot \cot(\theta)}{s}$ $T_n = 28831\,kip \cdot in$ $T_n = 2403\,kip \cdot ft$ LRFD 5.8.3.6.2-1

$T_r := \phi \cdot T_n$ $T_r = 25948\,kip \cdot in$ $T_r = 2162\,kip \cdot ft$ LRFD 5.8.2.1

$T_r \geq T_u = 1$ OK

Shear Resistance:

The factored Shear Resistance shall be:

$V_r = \phi \cdot V_n$ LRFD 5.8.2.1

$V_c := 0.0316 \cdot \beta \cdot \sqrt{\frac{f'c}{ksi}} \cdot b_v \cdot d_v \cdot ksi$ $V_c = 471.5\,kip$ LRFD 5.8.3.3

$\alpha := 90 \cdot deg$

$V_s := \frac{A_v \cdot f_y \cdot d_v \cdot (\cot(\theta) + \cot(\alpha)) \cdot \sin(\alpha)}{s}$ $V_s = 930.4\,kip$ LRFD 5.8.3.3

$V_n := \min\left(V_c + V_s + V_p, 0.25 \cdot f'c \cdot b_v \cdot d_v + V_p\right)$ $V_n = 1402\,kip$

$V_r := \phi \cdot V_n$ $V_r = 1262\,kip$

$V_r \geq V_u = 1$ OK

Check for Longitudinal Reinforcement: LRFD 5.8.3.6.3

$f_{ps} := 0 \cdot ksi$

$X1 := A_s \cdot f_y + A_{ps} \cdot f_{ps}$ $X1 = 640\,kip$

For a Solid Section:

$$X2 := \frac{|M_u|}{\phi \cdot d_v} + \frac{0.5 \cdot N_u}{\phi} + \cot(\theta) \cdot \sqrt{\left(\left|\frac{V_u}{\phi} - V_p\right| - 0.5 \cdot V_s\right)^2 + \left(\frac{0.45 \cdot p_h \cdot T_u}{2 \cdot A_o \cdot \phi}\right)^2}$$

$X2 = 258\,kip$

$X1 \geq X2 = 1$ OK

Maximum Spacing of Transverse Reinforcement: LRFD 5.8.2.7

$v_u = 0.202\,ksi$

$0.125 \cdot f'c = 0.5\,ksi$

$s_{max} := if\left(v_u < 0.125 \cdot f'c, \min\left(0.8 \cdot d_v, 24in\right), \min\left(0.4 \cdot d_v, 12in\right)\right)$

$s_{max} = 24\,in$

$if\left(s \leq s_{max}, "OK", "NG"\right) = "OK"$

This design is based upon:

- AASHTO Guide Specifications for Structural Design of Sound Barriers - 1989 (including 2002 interim)
- AASHTO Standard Specifications for Highway Bridges 17th Ed. - 2002
- USS Steel Sheet Piling Design Manual - July 1984
- WSDOT Bridge Design Manual
- Caltrans Trenching and Shoring Manual - June 1995

This design doesn't account for the loads of a combined retaining wall / noisewall. A maximum of 2 ft of retained fill above the final ground line is suggested.

MathCAD file written by Brian Aldrich, July 15, 2004.

Define Units: $ksi \equiv 1000 \cdot psi$ $kip \equiv 1000 \cdot lbf$ $kcf \equiv kip \cdot ft^{-3}$ $klf \equiv kip \cdot ft^{-1}$

$plf \equiv lbf \cdot ft^{-1}$ $psf \equiv lbf \cdot ft^{-2}$ $pcf \equiv lbf \cdot ft^{-3}$

Concrete Properties:

$w_c := 160 \cdot pcf$ BDM 4.1.1

$f'c := 4000 \cdot psi$

$E_c := \left(\frac{w_c}{pcf}\right)^{1.5} \cdot 33 \cdot \sqrt{\frac{f'c}{psi}} \cdot psi$ $E_c = 4.224 \times 10^6\, psi$ Std Spec. 8.7.1

$\beta_1 := if\left(f'c \le 4000 \cdot psi, 0.85, \max\left(0.85 - \frac{f'c - 4000 \cdot psi}{1000 \cdot psi} \cdot 0.05, 0.65\right)\right)$ Std Spec. 8.16.2.7

$\beta_1 = 0.85$

$f_r := 7.5 \cdot \sqrt{\frac{f'c}{psi}} \cdot psi$ $f_r = 474.3\, psi$ Std Spec. 8.15.2.1.1

Reinforcement Properties:

Diameters: $dia(bar) := \begin{cases} 0.375\cdot in & \text{if } bar = 3 \\ 0.500\cdot in & \text{if } bar = 4 \\ 0.625\cdot in & \text{if } bar = 5 \\ 0.750\cdot in & \text{if } bar = 6 \\ 0.875\cdot in & \text{if } bar = 7 \\ 1.000\cdot in & \text{if } bar = 8 \\ 1.128\cdot in & \text{if } bar = 9 \\ 1.270\cdot in & \text{if } bar = 10 \\ 1.410\cdot in & \text{if } bar = 11 \\ 1.693\cdot in & \text{if } bar = 14 \\ 2.257\cdot in & \text{if } bar = 18 \end{cases}$

Areas: $A_b(bar) := \begin{cases} 0.11\cdot in^2 & \text{if } bar = 3 \\ 0.20\cdot in^2 & \text{if } bar = 4 \\ 0.31\cdot in^2 & \text{if } bar = 5 \\ 0.44\cdot in^2 & \text{if } bar = 6 \\ 0.60\cdot in^2 & \text{if } bar = 7 \\ 0.79\cdot in^2 & \text{if } bar = 8 \\ 1.00\cdot in^2 & \text{if } bar = 9 \\ 1.27\cdot in^2 & \text{if } bar = 10 \\ 1.56\cdot in^2 & \text{if } bar = 11 \\ 2.25\cdot in^2 & \text{if } bar = 14 \\ 4.00\cdot in^2 & \text{if } bar = 18 \end{cases}$

$f_y := 60000\cdot psi$

$E_s := 29000000\cdot psi$ Std. Spec. 8.7.2

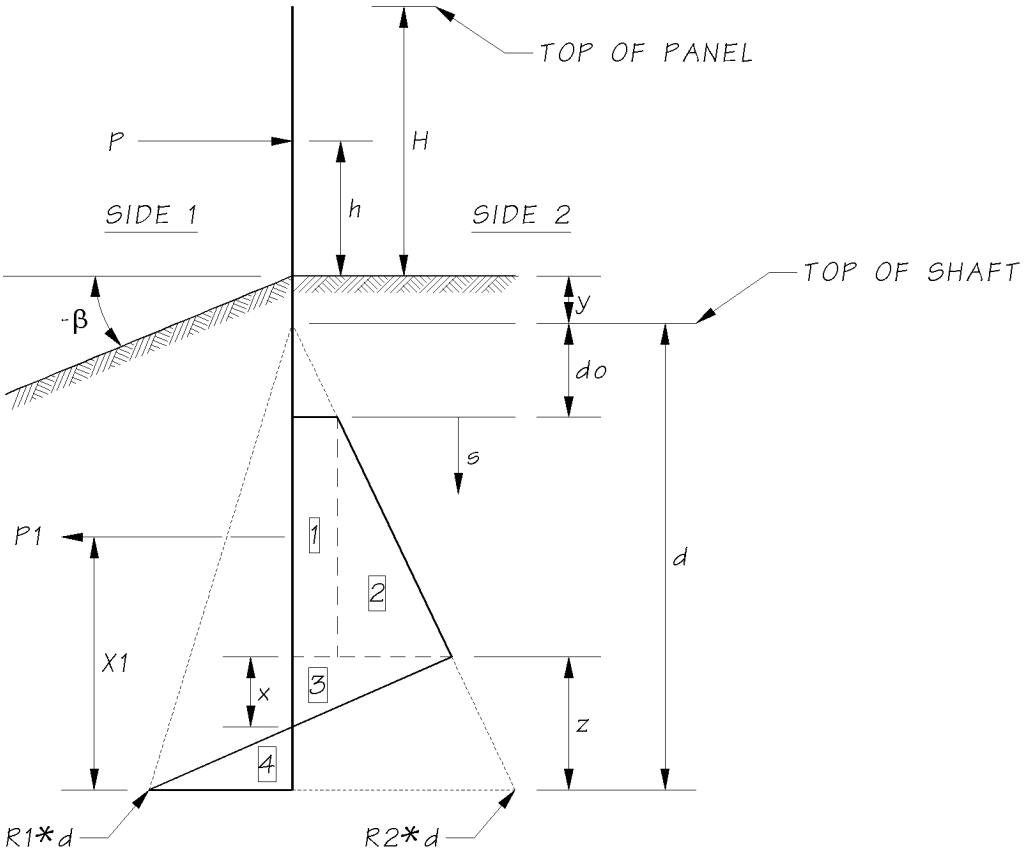

FIGURE A: SHAFT LATERAL SOIL PRESSURES

Wall Geometry:

Wall Height:	$H := 24 \cdot ft$	H should be <= 28 ft
Half of Wall Height:	$h := H \cdot 0.5$	$h = 12\,ft$
Shaft Diameter:	$b := 2.50 \cdot ft$	
Shaft Spacing:	$L := 12 \cdot ft$	

Wind Load (Guide Spec. Table 1-2.1.2.C):

$WindExp := "B2"$ Wind Exposure B1 or B2 - Provided by the Region

$WindVel := 90 \cdot mph$ Wind Velocity 80 or 90 mph - Provided by the Region

$$WindPressure(WindExp, WindVel) := \begin{cases} 12 \cdot psf & \text{if } (WindExp = "B1" \wedge WindVel = 80 \cdot mph) \\ 16 \cdot psf & \text{if } (WindExp = "B1" \wedge WindVel = 90 \cdot mph) \\ 20 \cdot psf & \text{if } (WindExp = "B2" \wedge WindVel = 80 \cdot mph) \\ 25 \cdot psf & \text{if } (WindExp = "B2" \wedge WindVel = 90 \cdot mph) \\ "error" & \text{otherwise} \end{cases}$$

Wind Pressure: $P_w := WindPressure(WindExp, WindVel)$ $P_w = 25\,psf$

Seismic Load (Guide Spec. 1-2.1.3):

Acceleration Coefficient	$A := 0.35$	BDM 4.4-A2
DL Coefficient, Wall	$f := 0.75$	Not on bridge condition
Panel Plan Area:	$A_{pp} := 4in \cdot L + 13in \cdot 16in$	$A_{pp} = 5.44\,ft^2$
Seismic Force EQD (perp. to wall surface):	$EQD := \max(A \cdot f, 0.1) \cdot \left(\frac{A_{pp} \cdot w_c}{L}\right)$	$EQD = 19.1\,psf$

Factored Loads (Guide Spec. 1-2.2.2):

$Wind := 1.3 \cdot P_w \cdot 2 \cdot h \cdot L$	$Wind = 9360\,lbf$	
$EQ := 1.3 \cdot EQD \cdot 2 \cdot h \cdot L$	$EQ = 7134\,lbf$	
$P := \max(Wind, EQ)$	$P = 9360\,lbf$	Factored Design load acting at mid height of wall "h".

Soil Parameters:

Soil Friction Angle:	$\phi := 38 \cdot deg$		Provided by the Region
Soil Unit Weight:	$\gamma := 125 \cdot pcf$		Provided by the Region
Top Soil Depth:	$y := 2.0 \cdot ft$		From top of shaft to ground line
Ineffective Shaft Depth:	$d_o := 0.5 \cdot ft$		Depth of neglected soil at shaft
Isolation Factor for Shafts:	$Iso := \min\left(3.0, 0.08 \cdot \frac{\phi}{deg}, \frac{L}{b}\right)$ $Iso = 3.00$		Factor used to amplify the passive resistance based on soil wedge behavior resulting from shaft spacing - Caltrans pg 10-2.
Factor of Safety:	$FS := 1.00$		
Angle of Wall Friction:	$\delta := \frac{2}{3} \cdot \phi$	$\delta = 25.333\,deg$	Guide Spec. App. C pg. 33
Correction Factor for Horizontal Component of Earth Pressure:	$HC := \cos(\delta)$	$HC = 0.904$	
Foundation Strength Reduction Factors:	$\phi_{fa} := 1.00$	(Active)	Guide Spec. 1-2.2.3
	$\phi_{fp} := 0.90$	(Passive)	Guide Spec. 1-2.2.3

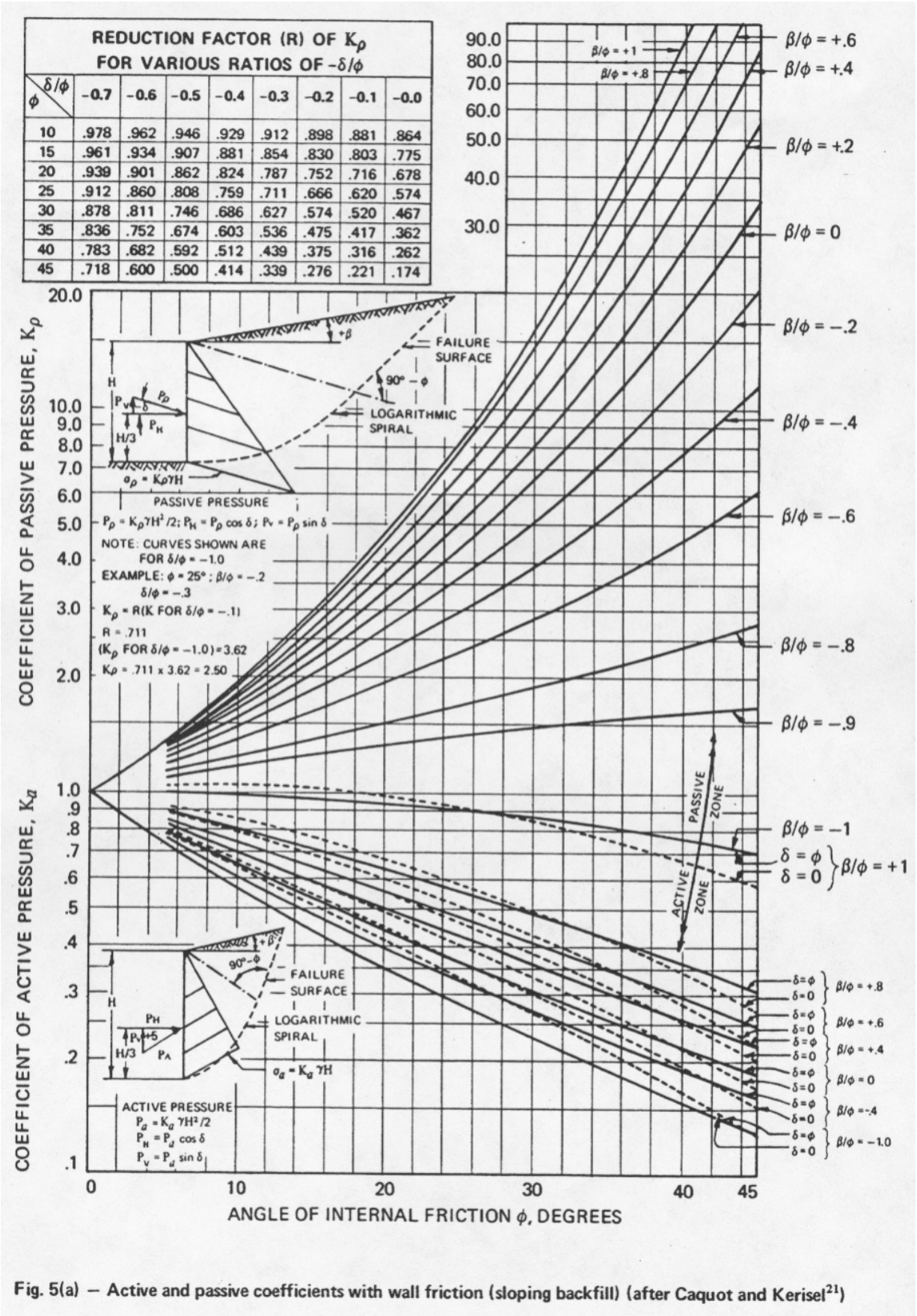

Fig. 5(a) — Active and passive coefficients with wall friction (sloping backfill) (after Caquot and Kerisel[21])

Side 1:

Backfill Slope Angle: $\beta_{s1} := -\text{atan}\left(\frac{1}{2}\right)$ $\beta_{s1} = -26.5651\,\text{deg}$ $\frac{\beta_{s1}}{\phi} = -0.70$

Using the USS Steel Sheet Piling Design Manual, Figure 5(a):

For ϕ = 38 deg and β_s = 0 deg:
K_a = 0.234, K_p = 14.20, R_p = 0.773

For ϕ = 32 deg and β_s = 0 deg:
K_a = 0.290, K_p = 7.85, R_p = 0.8366

For ϕ = 38 deg and β_s = -26.5651 deg:
K_a = 0.190, K_p = 3.060, R_p = 0.773

For ϕ = 32 deg and β_s = -26.5651 deg:
K_a = 0.230, K_p = 1.82, R_p = 0.8366

Active Earth Pressure Coeff: $K_{a1} := 0.190$ USS Fig. 5(a)

Passive Earth Pressure Coeff: $K_{p1} := 3.060$ USS Fig. 5(a)

Reduction for Kp: $R_{p1} := 0.773$ USS Fig. 5(a)

Active Pressure:

$\phi P_{a1} := K_{a1} \cdot \gamma \cdot HC \cdot \phi_{fa}$ $\phi P_{a1} = 21\,\frac{\text{psf}}{\text{ft}}$

Passive Pressure:

$\phi P_{p1} := \frac{K_{p1} \cdot R_{p1} \cdot \gamma \cdot HC \cdot Iso \cdot \phi_{fp}}{FS}$ $\phi P_{p1} = 722\,\frac{\text{psf}}{\text{ft}}$

Side 2:

Backfill Slope Angle: $\beta_{s2} := -\text{atan}\left(\frac{1}{2}\right)$ $\beta_{s2} = -26.5651\,\text{deg}$ $\frac{\beta_{s2}}{\phi} = -0.70$

Active Earth Pressure Coeff: $K_{a2} := 0.190$ USS Fig. 5(a)

Passive Earth Pressure Coeff: $K_{p2} := 3.060$ USS Fig. 5(a)

Reduction for Kp: $R_{p2} := 0.773$ USS Fig. 5(a)

Active Pressure:

$\phi P_{a2} := K_{a2} \cdot \gamma \cdot HC \cdot \phi_{fa}$ $\phi P_{a2} = 21\,\frac{\text{psf}}{\text{ft}}$

Passive Pressure:

$\phi P_{p2} := \frac{K_{p2} \cdot R_{p2} \cdot \gamma \cdot HC \cdot Iso \cdot \phi_{fp}}{FS}$ $\phi P_{p2} = 722\,\frac{\text{psf}}{\text{ft}}$

Allowable Net Lateral Soil Pressure:

$R_1 := \phi P_{p1} - \phi P_{a2}$ $R_1 = 700\,\frac{\text{psf}}{\text{ft}}$ Side 1

$R_2 := \phi P_{p2} - \phi P_{a1}$ $R_2 = 700\,\frac{\text{psf}}{\text{ft}}$ Side 2

Depth of Shaft Required:

The function "ShaftD" finds the required shaft depth "d" by increasing the shaft depth until the sum of the moments about the base of the shaft "Msum" is nearly zero. See Figure A for a definition of terms.

$$\text{ShaftD}\left(d_o, P, R_1, R_2, b, h, y\right) :=$$

$d \leftarrow 0 \cdot ft$

$M_{sum} \leftarrow 100 \cdot lbf \cdot ft$

while $M_{sum} \geq 0.001 \cdot lbf \cdot ft$

$d \leftarrow d + 0.00001 \cdot ft$

$z \leftarrow \dfrac{2}{d \cdot \left(R_1 + R_2\right)} \cdot \left(\dfrac{R_2 \cdot d^2}{2} - \dfrac{R_2 \cdot {d_o}^2}{2} - \dfrac{P}{b} \right)$

$x \leftarrow \dfrac{R_2 \cdot z \cdot (d - z)}{R_1 \cdot d + R_2 \cdot (d - z)}$

$P1 \leftarrow \left(R_2 \cdot d_o\right) \cdot \left(d - d_o - z\right)$

$P2 \leftarrow R_2 \cdot \left(d - d_o - z\right)^2 \cdot \dfrac{1}{2}$

$P3 \leftarrow R_2 \cdot (d - z) \cdot x \cdot \dfrac{1}{2}$

$P4 \leftarrow R_1 \cdot d \cdot (z - x) \cdot \dfrac{1}{2}$

$X1 \leftarrow \dfrac{z + d - d_o}{2}$

$X2 \leftarrow \dfrac{2 \cdot z + d - d_o}{3}$

$X3 \leftarrow z - \dfrac{x}{3}$

$X4 \leftarrow \dfrac{1}{3} \cdot (z - x)$

$M_{sum} \leftarrow P \cdot (h + y + d) + b \cdot (-P1 \cdot X1 - P2 \cdot X2 - P3 \cdot X3 + P4 \cdot X4)$

d

Check for 2 load cases. Case 1 has load P acting as shown on Figure A. Case 2 has load P acting in the opposite direction.

Case 1:

$d_{c1} := \text{ShaftD}(d_o, P, R_1, R_2, b, h, y)$ $d_{c1} = 11.18\,\text{ft}$

$z_{c1} := \frac{2}{d_{c1}\cdot(R_1 + R_2)}\cdot\left(\frac{R_2\cdot d_{c1}^{\,2}}{2} - \frac{R_2\cdot d_o^{\,2}}{2} - \frac{P}{b}\right)$ $z_{c1} = 5.102\,\text{ft}$

$x_{c1} := \frac{R_2\cdot z_{c1}\cdot(d_{c1} - z_{c1})}{R_1\cdot d_{c1} + R_2\cdot(d_{c1} - z_{c1})}$ $x_{c1} = 1.797\,\text{ft}$

$P4_{c1} := R_1\cdot d_{c1}\cdot(z_{c1} - x_{c1})\cdot\frac{1}{2}$ $P4_{c1} = 12935\,\text{ft}^2\,\frac{\text{psf}}{\text{ft}}$

Case 2:

$d_{c2} := \text{ShaftD}(d_o, P, R_2, R_1, b, h, y)$ $d_{c2} = 11.18\,\text{ft}$

$z_{c2} := \frac{2}{d_{c2}\cdot(R_1 + R_2)}\cdot\left(\frac{R_1\cdot d_{c2}^{\,2}}{2} - \frac{R_1\cdot d_o^{\,2}}{2} - \frac{P}{b}\right)$ $z_{c2} = 5.102\,\text{ft}$

$x_{c2} := \frac{R_1\cdot z_{c2}\cdot(d_{c2} - z_{c2})}{R_2\cdot d_{c2} + R_1\cdot(d_{c2} - z_{c2})}$ $x_{c2} = 1.797\,\text{ft}$

$P4_{c2} := R_2\cdot d_{c2}\cdot(z_{c2} - x_{c2})\cdot\frac{1}{2}$ $P4_{c2} = 12935\,\text{ft}^2\,\frac{\text{psf}}{\text{ft}}$

Determine Shaft Lateral Pressures and Moment Arms for Controlling Case:

$d := \max(d_{c1}, d_{c2})$ $d = 11.18\,\text{ft}$

$R_a := \text{if}(d_{c2} \ge d_{c1}, R_1, R_2)$ $R_a = 700\,\frac{\text{psf}}{\text{ft}}$ $R_b := \text{if}(d_{c2} \ge d_{c1}, R_2, R_1)$ $R_b = 700\,\frac{\text{psf}}{\text{ft}}$

$z := \frac{2}{d\cdot(R_a + R_b)}\cdot\left(\frac{R_a\cdot d^2}{2} - \frac{R_a\cdot d_o^{\,2}}{2} - \frac{P}{b}\right)$ $z = 5.102\,\text{ft}$ $x := \frac{R_a\cdot z\cdot(d - z)}{R_b\cdot d + R_a\cdot(d - z)}$ $x = 1.797\,\text{ft}$

$P1 := (R_a\cdot d_o)\cdot(d - d_o - z)$ $P1 = 1953\,\frac{\text{lbf}}{\text{ft}}$ $X1 := \frac{z + d - d_o}{2}$ $X1 = 7.892\,\text{ft}$

$P2 := R_a\cdot(d - d_o - z)^2\cdot\frac{1}{2}$ $P2 = 10901\,\frac{\text{lbf}}{\text{ft}}$ $X2 := \frac{2\cdot z + d - d_o}{3}$ $X2 = 6.962\,\text{ft}$

$P3 := R_a\cdot(d - z)\cdot x\cdot\frac{1}{2}$ $P3 = 3825\,\frac{\text{lbf}}{\text{ft}}$ $X3 := z - \frac{x}{3}$ $X3 = 4.503\,\text{ft}$

$P4 := R_b\cdot d\cdot(z - x)\cdot\frac{1}{2}$ $P4 = 12935\,\frac{\text{lbf}}{\text{ft}}$ $X4 := \frac{1}{3}\cdot(z - x)$ $X4 = 1.102\,\text{ft}$

$M_{sum} := P\cdot(h + y + d) + b\cdot(-P1\cdot X1 - P2\cdot X2 - P3\cdot X3 + P4\cdot X4)$ $M_{sum} = -0.13163\,\text{lbf}\cdot\text{ft}$

Shaft Design Values:

The Maximum Shear will occur at the bolts or at the top of area 4 on Figure A:

$V_{shaft} := \max\left(P, P4_{c1} \cdot b, P4_{c2} \cdot b\right)$ $V_{shaft} = 32339\,lbf$

The Maximum Moment in the shaft will occur where the shear = 0.

Assume that the point where shear = 0 occurs in areas 1 and 2 on Figure A.

Check for Case 1:

$s_{c1} := -d_o + \sqrt{d_o^{\,2} + \frac{2 \cdot P}{R_2 \cdot b}}$ $s_{c1} = 2.808\,ft$

$M_{shaftc1} := P \cdot \left(h + y + d_o + s_{c1}\right) - R_2 \cdot d_o \cdot b \cdot s_{c1}^{\,2} \cdot \frac{1}{2} - R_2 \cdot b \cdot s_{c1}^{\,3} \cdot \frac{1}{6}$ $M_{shaftc1} = 152094\,lbf \cdot ft$

Check that the point where shear = 0 occurs in areas 1 and 2 on Figure A:

$Check1 := if\left[s_{c1} \le \left(d_{c1} - d_o - z_{c1}\right), "OK", "NG"\right]$ $Check1 = "OK"$

Check for Case 2:

$s_{c2} := -d_o + \sqrt{d_o^{\,2} + \frac{2 \cdot P}{R_1 \cdot b}}$ $s_{c2} = 2.808\,ft$

$M_{shaftc2} := P \cdot \left(h + y + d_o + s_{c2}\right) - R_1 \cdot d_o \cdot b \cdot s_{c2}^{\,2} \cdot \frac{1}{2} - R_1 \cdot b \cdot s_{c2}^{\,3} \cdot \frac{1}{6}$ $M_{shaftc2} = 152094\,lbf \cdot ft$

Check that the point where shear = 0 occurs in areas 1 and 2 on Figure A:

$Check2 := if\left[s_{c2} \le \left(d_{c2} - d_o - z_{c2}\right), "OK", "NG"\right]$ $Check2 = "OK"$

$M_{shaft} := \max\left(M_{shaftc1}, M_{shaftc2}\right)$ $M_{shaft} = 152094\,lbf \cdot ft$

Anchor Bolt and Panel Post Design Values:

$V_{bolt} := P$ $V_{bolt} = 9360\,lbf$

$M_{bolt} := P \cdot (h + y)$ $M_{bolt} = 131040\,lbf \cdot ft$

Panel Design Value (about a vertical axis):

Find Design Moment for a 1 ft wide strip of wall (between panel posts) for the panel flexure design

$w_{panel} := \max\left[P_w, \max(A \cdot f, 0.1) \cdot \left(4in \cdot w_c\right)\right]$ $w_{panel} = 25.0\,psf$

$M_{panel} := 1.3 \frac{w_{panel} \cdot L^2}{8}$ $M_{panel} = 585 \frac{lbf \cdot ft}{ft}$

Panel Post Resistance:

$Cl_{pa} := 1.0in$ Clear Cover to Ties $h_{pa} := 17in$ Depth of Post

$b_{pa} := 10in$ Width of Post $bar_A := 10$ Per Design Requirements

Check Flexural Resistance (Std. Spec. 8.16.3):

$\phi_f := 0.90$ Std. Spec. 8.16.1.2.2

$d_{pa} := h_{pa} - Cl_{pa} - dia(3) - \frac{dia(bar_A)}{2}$ $d_{pa} = 14.99\,in$ Effective depth

$A_s := 2 \cdot A_b(bar_A)$ $A_s = 2.54\,in^2$

$a := \frac{A_s \cdot f_y}{0.85 \cdot f'c \cdot b_{pa}}$ $a = 4.482\,in$

$M_n := A_s \cdot f_y \cdot \left(d_{pa} - \frac{a}{2} \right)$ $M_n = 161910\,lbf \cdot ft$

$\phi_f \cdot M_n = 145719\,lbf \cdot ft$

$Check3 := if(\phi_f \cdot M_n \geq M_{bolt}, "OK", "NG")$ Check3 = "OK"

Check Maximum Reinforcement (Std. Spec. 8.16.3.1):

$\rho_b := \frac{0.85 \cdot \beta_1 \cdot f'c}{f_y} \cdot \left(\frac{87000 \cdot psi}{87000 \cdot psi + f_y} \right)$ $\rho_b = 0.029$

$\rho := \frac{A_s}{b_{pa} \cdot d_{pa}}$ $\rho = 0.01694$

$Check4 := if(\rho \leq 0.75 \cdot \rho_b, "OK", "NG")$ Check4 = "OK"

Check Minimum Reinforcement (Std. Spec. 8.17.1.1):

$S_a := \frac{b_{pa} \cdot h_{pa}^2}{6}$ $S_a = 481.7\,in^3$

$M_{cra} := f_r \cdot S_a$ $M_{cra} = 19040\,lbf \cdot ft$

$Check5 := if(\phi_f \cdot M_n \geq \min(1.2 \cdot M_{cra}, 1.33 \cdot M_{bolt}), "OK", "NG")$ Check5 = "OK"

Check Shear (Std. Spec. 8.16.6) - Note: Shear Capacity of stirrups neglected:

$\phi_v := 0.85$ Std. Spec. 8.16.1.2.2

$V_{ca} := 2 \cdot \sqrt{\frac{f'c}{psi}} \cdot psi \cdot b_{pa} \cdot d_{pa}$ $V_{ca} = 18961\,lbf$

$Check6 := if\left(\phi_v \cdot V_{ca} \geq V_{bolt}, "OK", "NG"\right)$ Check6 = "OK"

Panel Post Base Resistance:

$b_{pb} := 9in$ Width of Panel Post Base $bar_B := 9$ Per Design Requirements

$h_{pb} := 17.5in$ Depth of Panel Post Base

Check Flexural Resistance (Std. Spec. 8.16.3):

$\phi_f = 0.9$ Std. Spec. 8.16.1.2.2

$d_{pb} := h_{pb} - 0.75in$ $d_{pb} = 16.75\,in$ Effective depth

$A_s := 2 \cdot A_b\left(bar_B\right)$ $A_s = 2\,in^2$

$a := \frac{A_s \cdot f_y}{0.85 \cdot f'c \cdot b_{pb}}$ $a = 3.922\,in$

$M_n := A_s \cdot f_y \cdot \left(d_{pb} - \frac{a}{2}\right)$ $M_n = 147892\,lbf \cdot ft$

$\phi_f \cdot M_n = 133103\,lbf \cdot ft$

$Check7 := if\left(\phi_f \cdot M_n \geq M_{bolt}, "OK", "NG"\right)$ Check7 = "OK"

Check Maximum Reinforcement (Std. Spec. 8.16.3.1):

$\rho_b := \frac{0.85 \cdot \beta_1 \cdot f'c}{f_y} \cdot \left(\frac{87000 \cdot psi}{87000 \cdot psi + f_y}\right)$ $\rho_b = 0.029$

$\rho := \frac{A_s}{b_{pb} \cdot d_{pb}}$ $\rho = 0.01327$

$Check8 := if\left(\rho \leq 0.75 \cdot \rho_b, "OK", "NG"\right)$ Check8 = "OK"

Check Minimum Reinforcement (Std. Spec. 8.17.1.1):

$S_b := \frac{b_{pb} \cdot h_{pb}^2}{6}$ $S_b = 459.4\,in^3$

$M_{crb} := f_r \cdot S_b$ $M_{crb} = 18158\,lbf \cdot ft$

$Check9 := if\left(\phi_f \cdot M_n \geq \min\left(1.2 \cdot M_{crb}, 1.33 \cdot M_{bolt}\right), "OK", "NG"\right)$ Check9 = "OK"

Check Shear (Std. Spec. 8.16.6) - Note: Shear Capacity of stirrups neglected:

$\phi_v = 0.85$ Std. Spec. 8.16.1.2.2

$V_{cb} := 2 \cdot \sqrt{\frac{f'c}{psi}} \cdot psi \cdot b_{pb} \cdot d_{pb}$ $V_{cb} = 19069\,lbf$

$Check10 := if\left(\phi_v \cdot V_{cb} \geq V_{bolt}, "OK", "NG"\right)$ Check10 = "OK"

Required Splice Length (Std. Spec. 8.25 and 8.32):

Basic Development Length (Std. Spec. 8.25.1):

$$l_{basic}(bar) := \begin{cases} \max\left(\frac{0.04 \cdot A_b(bar) \cdot f_y}{\sqrt{\frac{f'c}{psi}} \cdot psi \cdot in}, 0.0004 \cdot dia(bar) \cdot \frac{f_y}{psi}\right) & \text{if } bar \leq 11 \\ \frac{0.085 \cdot f_y}{\sqrt{\frac{f'c}{psi}} \cdot psi} \cdot in & \text{if } bar = 14 \\ \frac{0.11 \cdot f_y}{\sqrt{\frac{f'c}{psi}} \cdot psi} \cdot in & \text{if } bar = 18 \\ "error" & \text{otherwise} \end{cases}$$

$l_{basicA} := l_{basic}\left(bar_A\right)$ $l_{basicA} = 4.016\,ft$

$l_{basicB} := l_{basic}\left(bar_B\right)$ $l_{basicB} = 3.162\,ft$

Development Length (Std. Spec. 8.25):

For top reinforcement placed with more than 12 inches of concrete cast below (Std. Spec. 8.25.2.1):

$l_{dA} := l_{basicA} \cdot 1.4$ $l_{dA} = 5.623\,ft$

$l_{dB} := l_{basicB} \cdot 1.4$ $l_{dB} = 4.427\,ft$

Required Lapsplice (Y):

The required lapsplice Y is the maximum of the required lap splice length of bar A (using a Class C splice), the development length of bar B, or 2'-0" per BDM 5.1.2.D.

$LapSplice := \max\left(1.7 \cdot l_{dA}, l_{dB}, 2 \cdot ft\right)$ $LapSplice = 9.558\,ft$

Note: Lap Splices are not allowed for bar sizes greater than 11 per AASHTO Std. Spec. 8.32.1.1.

$Check11 := if\left(bar_A \leq 11 \wedge bar_B \leq 11, "OK", "NG"\right)$ Check11 = "OK"

Anchor Bolt Resistance (Std. Spec. 10.56):

$V_{bolt} = 9360\,lbf$ $V_{bolt} = 9.36\,kip$

$M_{bolt} = 131040\,lbf \cdot ft$ $M_{bolt} = 1572.48\,kip \cdot in$

$d_{bolt} := 1.0 \cdot in$ Per Design Requirements

$A_{bolt} := \frac{\pi \cdot d_{bolt}^{2}}{4}$ $A_{bolt} = 0.785\,in^{2}$

$F_t := 30 \cdot ksi$ Std. Spec. Tbl. 10.56A for A307

$F_v := 18 \cdot ksi$ Std. Spec. Tbl. 10.56A for A307

$PanelAxialLoad := \left(4in \cdot \frac{L}{2} + 13in \cdot 10in\right) \cdot (2 \cdot h + y - 3in) \cdot w_c$ $PanelAxialLoad = 11.959\,kip$

$f_a := \frac{PanelAxialLoad}{4 \cdot A_{bolt}}$ $f_a = 3.807\,ksi$ Axial Compressive Stress

$f_v := \frac{V_{bolt}}{4 \cdot A_{bolt}}$ $f_v = 2.98\,ksi$ Shear Stress

$Check12 := if\left(f_v \le F_v, \text{"OK"}, \text{"NG"}\right)$ $Check12 = \text{"OK"}$

$f_t := \frac{M_{bolt}}{13.5in} \cdot \frac{1}{2 \cdot A_{bolt}} - f_a$ $f_t = 70.35\,ksi$ Tensile Stress

$F_{t1} := if\left[\frac{f_v}{F_v} \le 0.33, F_t, F_t \cdot \sqrt{1 - \left(\frac{f_v}{F_v}\right)^{2}}\right]$ $F_{t1} = 30\,ksi$ Std. Spec. 10.56.1.3.3

$Check13 := if\left(f_t \le F_{t1}, \text{"OK"}, \text{"NG"}\right)$ $Check13 = \text{"NG"}$

Design Summary:

Wall Height:	$H = 24\,ft$
Required Shaft Depth:	$d = 11.18\,ft$
Maximum Shaft Shear:	$V_{shaft} = 32339\,lbf$
Maximum Shaft Moment:	$M_{shaft} = 152094\,lbf \cdot ft$
Maximum Shaft Moment Accuracy Check (Case 1):	Check1 = "OK"
Maximum Shaft Moment Accuracy Check (Case 2):	Check2 = "OK"
Bar A:	$bar_A = 10$
Post Flexural Resistance (Bar A):	Check3 = "OK"
Maximum Reinforcement Check (Bar A):	Check4 = "OK"
Minimum Reinforcement Check (Bar A):	Check5 = "OK"
Post Shear Check (Bar A):	Check6 = "OK"
Bar B:	$bar_B = 9$
Post Flexural Resistance (Bar B):	Check7 = "OK"
Maximum Reinforcement Check (Bar B):	Check8 = "OK"
Minimum Reinforcement Check (Bar B):	Check9 = "OK"
Post Shear Check (Bar B):	Check10 = "OK"
Lap Splice Length:	$LapSplice = 9.558\,ft$
Lap Splice Allowed Check:	Check11 = "OK"
Bolt Diameter:	$d_{bolt} = 1\,in$
Anchor Bolt Shear Stress Check:	Check12 = "OK"
Anchor Bolt Tensile Stress Check:	Check13 = "NG"

5.99 References

1. AASHTO LRFD *Bridge Construction Specifications*, Current Edition, AASHTO, Washington, D.C.
2. Seguirant, S.J., "New Deep WSDOT Standard Sections Extend Spans of Prestressed Concrete Girders," PCI JOURNAL, V. 43, No. 4, July-August 1998, pp. 92-119.
3. PCI *Bridge Design Manual*, Precast/Prestressed Concrete Institute, Chicago, IL, 1997.
4. ACI 318-02, Building Code Requirements for Reinforced Concrete and Commentary, American Concrete Institute, 1989, pp.353.
5. Hsu, T. T. C., Torsion of Reinforced Concrete, Van Nostrand Reinhold Co., New York, 1st Ed., 1984, 516 pp.
6. Collins, M. P. and Mitchell, D., Shear and Torsion Design of Prestressed and Non-Prestressed Concrete Beams, PCI Journal, September-October, 1980, pp. 32-100.
7. Mirza, S.A., and Furlong, R.W., Design of Reinforced and Prestressed Concrete Inverted T Beams for Bridge Structures, PCI Journal, Vol. 30, No. 4, July-August 1985, pp. 112-136.
8. Rabbat, B.G., Reader Comments Design of Reinforced and Prestressed Concrete inverted T Beams for Bridge Structures, PCI Journal, Vol. 31, No. 3, May-June 1986, pp. 157-163.
9. ACI Committee 345, Guide for Widening Highway Bridges, ACI Structural Journal, July/August, 1992, pp. 451-466.
10. PCI Design Handbook, Precast and Prestressed Concrete, Sixth Edition, Precast/Prestressed Concrete Institute, Chicago, IL, 2004.
11. Mast, R.F., "Lateral Stability of Long Prestressed Concrete Beams, Part 1," PCI JOURNAL, V. 34, No. 1, January-February 1989, pp. 34-53.
12. Mast, R.F., "Lateral Stability of Long Prestressed Concrete Beams, Part 2," PCI JOURNAL, V. 38, No. 1, January-February 1993, pp. 70-88.
13. Imper, R.R., and Laszlo, G., "Handling and Shipping of Long Span Bridge Beams," PCI JOURNAL, V. 32, No. 6, November-December 1987, pp. 86-101.
14. Manual for the Evaluation and Repair of Precast, Prestressed Concrete Bridge Products, Precast/Prestressed Concrete Institute, Chicago, IL, 2006.
15. Transportation Research Board Report No. 226 titled, Damage Evaluation and Repair Methods for Prestressed Concrete Bridge Members.
16. Transportation Research Board Report No. 280 titled, Guidelines for Evaluation and Repair of Prestressed Concrete Bridge Members.
17. Post-tensioned *Box Girder Bridge Manual*, Post-tensioning Institute, 301 West Osborn, Phoenix, Arizona.
18. Prestressed Concrete Structures T. Y. Lin, Wiley.
19. Prestressed Concrete Vol. I and II, Guyon, Wiley

20. Design of Concrete Bridges for Temperature Gradients, ACI Journal, May 1978.

21. Mast, R. F., "Unified Design Provisions for Reinforced and Prestressed Concrete Flexural and Compression Members", ACI Structural Journal, V. 89, No. 2, March-April 1992, pp. 185-199. See also discussions by R.K. Devalapura and M.K. Tadros, C.W. Dolan and J.V. Loscheider and closure to discussions in V. 89, No. 5, September-October 1992, pp. 591-593.

22. Weigel, J.A., Seguirant, S.J., Brice, R., and Khaleghi, B., "High Performance Precast, Prestressed Concrete Girder Bridges in Washington State," PCI JOURNAL, V. 48, No. 2, March-April 2003, pp. 28-52.

23. Seguirant, S. J., Brice, R., and Khaleghi, B., "Flexural Strength of Reinforced and Prestressed Concrete T-Beams," PCI JOURNAL, V. 50, No. 1, January-February 2005, pp 44-73.

24. TRAC Report WA-RD 696.1, "Effect of Intermediate Diaphragms to Prestressed Concrete Bridge Girders in Over-Height Truck Impacts" completed on April 2008 by the Washington State University.

25. NCHRP Report 628, "Self-Consolidating Concrete for Precast, Prestressed Concrete Bridge Elements", NCHRP Project 18-12, Transportation Research Board, 2009.

26. PCI Publication CB-02-16-E, "Recommended Practice for Lateral Stability of Precast, Prestressed Concrete Bridge Girders", First Edition, Precast/Prestressed Concrete Institute, February 2016.

Chapter 6 Structural Steel Contents

6.0 Structural Steel 6-1
6.0.1 Introduction 6-1
6.0.2 Special Requirements for Steel Bridge Rehabilitation or Modification 6-1

6.1 Design Considerations 6-2
6.1.1 Codes, Specification, and Standards 6-2
6.1.2 WSDOT Steel Bridge Practice 6-3
6.1.3 Preliminary Girder Proportioning 6-4
6.1.4 Estimating Structural Steel Weights 6-4
6.1.5 Bridge Steels 6-6
6.1.6 Plate Sizes 6-7
6.1.7 Girder Segment Sizes 6-7
6.1.8 Computer Programs 6-8
6.1.9 Fasteners 6-8

6.2 Girder Bridges 6-10

6.3 Design of I-Girders 6-14
6.3.1 Limit States for AASHTO LRFD 6-14
6.3.2 Composite Section 6-14
6.3.3 Flanges 6-15
6.3.4 Webs 6-15
6.3.5 Transverse Stiffeners 6-15
6.3.6 Longitudinal Stiffeners 6-16
6.3.7 Bearing Stiffeners 6-16
6.3.8 Cross Frames 6-16
6.3.9 Bottom Laterals 6-18
6.3.10 Bolted Field Splice for Girders 6-18
6.3.11 Camber 6-19
6.3.12 Bridge Deck Placement Sequence 6-21
6.3.13 Bridge Bearings for Steel Girders 6-22
6.3.14 Surface Roughness and Hardness 6-22
6.3.15 Welding 6-24
6.3.16 Shop Assembly 6-25

6.4 Plan Details 6-27
6.4.1 General 6-27
6.4.2 Structural Steel Notes 6-27
6.4.3 Framing Plan 6-27
6.4.4 Girder Elevation 6-27
6.4.5 Typical Girder Details 6-28
6.4.6 Cross Frame Details 6-28
6.4.7 Camber Diagram and Bearing Stiffener Rotation 6-29
6.4.8 Bridge Deck 6-29
6.4.9 Handrail Details, Inspection Lighting, and Access 6-30
6.4.10 Box Girder Details 6-30

6.5 Shop Plan Review 6-32

6.6 Bridge Standard Drawings 6-33
Structural Steel 6-33

6.99 References 6-34

6.0 Structural Steel

6.0.1 Introduction

This chapter primarily covers design and construction of steel plate and box girder bridge superstructures. Because of their limited application, other types of steel superstructures (truss, arch, cable stayed, suspension, etc.) are not addressed.

Plate girder bridges are commonly used for river crossings and curved interchange ramps. Typical span lengths range from 150 to 300 feet. Steel girders are also being used where limited vertical clearance requires shallow superstructure depth. They may be set over busy highway lanes with a minimum of disruption and falsework, similar to precast concrete elements. Longitudinal launching of steel framing and transverse rolling of completed steel structures has been done successfully.

English units are the current standard for detailing. Widening or rehabilitation plan units should be consistent with the original.

6.0.2 Special Requirements for Steel Bridge Rehabilitation or Modification

As part of steel bridge rehabilitation or modification, calculations shall be made to demonstrate the adequacy of existing members and connections, with special attention given to fracture critical components such as truss gusset plates. When structural modifications or other alterations result in significant changes in stress level, deficiencies shall also be corrected. A thorough survey of impacted components shall be made to determine section loss due to corrosion or prior modification.

6.1 Design Considerations

6.1.1 Codes, Specification, and Standards

Steel highway bridges shall be designed to the following codes and specifications:

- AASHTO *LRFD Bridge Design Specifications* (LRFD), latest edition
- AASHTO *Guide Specifications for LRFD Seismic Bridge Design* (SEISMIC)
- ANSI/AWS A2.4-98 *Standard Symbols for Welding, Brazing, and Nondestructive Examination*

The following codes and specifications shall govern steel bridge construction:

- WSDOT *Standard Specifications for Road, Bridge, and Municipal Construction* (*Standard Specifications*) M 41-10, latest edition
- AASHTO/AWS D1.5M/D1.5: *Bridge Welding Code*, latest edition

The following AASHTO/NSBA Steel Bridge Collaboration publications are available to aid in the design and fabrication of steel bridges. These publications can be downloaded from the AASHTO website or a copy can be obtained from the Steel Specialist:

- G1.2-2003, *Design Drawing Presentation Guidelines*
- G12.1-2016, *Guidelines for Design for Constructability*
- G1.3-2002, *Shop Detail Drawing Presentation Guidelines*
- S2.1-2016, *Steel Bridge Fabrication Guide Specification*
- S4.1-2002, *Steel Bridge Fabrication QC/QA Guide Specification*
- G4.2-2006, *Recommendations for the Qualification of Structural Bolting Inspectors*
- G4.4-2006, *Sample Owners Quality Assurance Manual*
- S8.1-2014, *Guide Specification for Application of Coating Systems with Zinc-Rich Primers to Steel Bridges*
- G13.1-2014, *Guidelines for Steel Girder Bridge Analysis*
- G9.1-2004, *Steel Bridge Bearing Design and Detailing Guidelines*
- S10.1-2014, *Steel Bridge Erection Guide Specification*
- G1.4-2006, *Guidelines for Design Details*
- G1.1-2000, *Shop Detail Drawing Review/Approval Guidelines*
- G2.2-2016, *Guidelines for Resolution of Steel Bridge Fabrication Errors*

The following FHWA *Steel Bridge Design Handbook*, which includes 19 volumes of steel bridge design aids and 6 design examples, are also available as design aids and can be downloaded from the FHWA website at: www.fhwa.dot.gov/bridge/steel/pubs/if12052/. These documents are current with the AASTHO *Bridge Design Specifications*, 5th Edition.

Hard copies of these publications can be obtained from the Steel Specialist.

- *Bridge Steels and Their Mechanical Properties–Volume 1*
- *Steel Bridge Fabrication–Volume 2*
- *Structural Steel Bridge Shop Drawings–Volume 3*
- *Structural Behavior of Steel–Volume 4*

- *Selecting the Right Bridge Type–Volume 5*
- *Stringer Bridges–Making the Right Choices–Volume 6*
- *Loads and Load Combinations–Volume 7*
- *Structural Analysis–Volume 8*
- *Redundancy–Volume 9*
- *Limit States–Volume 10*
- *Design for Constructability–Volume 11*
- *Design for Fatigue–Volume 12*
- *Bracing System Design–Volume 13*
- *Splice Design–Volume 14*
- *Bearing Design–Volume 15*
- *Substructure Design–Volume 16*
- *Bridge Deck Design–Volume 17*
- *Load Rating of Steel Bridges–Volume 18*
- *Corrosion Protection of Steel Bridges–Volume 19*
- *Design Example: Three-span Continuous Straight I-Girder Bridge*
- *Design Example: Two-span Continuous Straight I-Girder Bridge*
- *Design Example: Two-span Continuous Straight Wide-Flange Beam Bridge*
- *Design Example: Three-span Continuous Curved I-Girder Beam Bridge*
- *Design Example: Three-span Continuous Straight Tub-Girder Bridge*
- *Design Example: Three-span Continuous Curved Tub-Girder Bridge*

6.1.2 WSDOT Steel Bridge Practice

Unshored, composite construction is used for most plate girder and box girder bridges. Shear connectors are placed throughout positive and negative moment regions, for full composite behavior. A minimum of one percent longitudinal deck steel, in accordance with AASHTO LRFD Article 6.10.1.7, shall be placed in negative moment regions to ensure adequate deck performance. For service level stiffness analysis, such as calculating live load moment envelopes, the bridge deck shall be considered composite and uncracked for the entire bridge length, provided the above methods are used. For negative moment at strength limit states, the bridge deck shall be ignored while reinforcing steel is included for stress and section property calculations. Where span arrangement is not well balanced, these assumptions may not apply.

Plastic design may be utilized as permitted in the AASTHO *LRFD Bridge Design Specifications*.

Currently, economical design requires simplified fabrication with less emphasis on weight reduction. The number of plate thicknesses and splices should be minimized. Also, the use of fewer girder lines, spaced at a maximum of about 14 to 16 feet, saves on fabrication, shipping, painting, and future inspection. Widely spaced girders will have heavier flanges, hence, greater stability during construction. Normally, eliminating a girder line will not require thickening remaining webs or increasing girder depth. The increased shear requirement can be met with a modest addition of web stiffeners or slightly thicker webs at interior piers.

For moderate to long spans, partially stiffened web design is the most economical. This method is a compromise between slender webs requiring transverse stiffening throughout and thicker, unstiffened webs. Stiffeners used to connect cross frames shall be welded to top and bottom flanges. Jacking stiffeners shall be used adjacent to bearing stiffeners, on girder or diaphragm webs, in order to accommodate future bearing replacement. Coordinate jack placement in substructure and girder details.

Steel framing shall consist of main girders and cross frames. Bottom lateral systems shall only be used when temporary bracing is not practical. Where lateral systems are needed, they shall be detailed carefully for adequate fatigue life.

Standard corrosion protection for steel bridges is the *Standard Specifications* four-coat paint system west of the Cascades and where paint is required for appearance. Unpainted weathering steel shall only be used east of the Cascades. WSDOT does not allow the use of steel stay-in-place deck forms.

6.1.3 Preliminary Girder Proportioning

The superstructure depth is initially determined during preliminary plan development and is based upon the span/depth ratios provided in Chapter 2. The depth may be reduced to gain vertical clearance, but the designer should verify live load deflection requirements are met. See AASHTO LRFD Table 2.5.2.6.3-1. Live load deflections shall be limited in accordance with the optional criteria of AASHTO LRFD Articles 2.5.2.6.2 and 3.6.1.3.2.

The superstructure depth is typically shown as the distance from the top of the bridge deck to the bottom of the web. Web depths are generally detailed in multiples of 6 inches.

On straight bridges, interior and exterior girders shall be detailed as identical. Spacing should be such that the distribution of wheel loads on the exterior girder is close to that of the interior girder. The number of girder lines should be minimized, with a maximum spacing of 14–16 feet. Steel bridges shall be redundant, with three or more girders lines for I-girders and two or more boxes for box girders, except as otherwise approved by the Steel Specialist and Bridge Design Engineer.

6.1.4 Estimating Structural Steel Weights

For the preliminary quantities or preliminary girder design, an estimate of steel weights for built-up plate composite I-girders can be obtained from Figure 6.1.4-1. This figure is based upon previous designs with AASHTO HS-20 live loads with no distinction between service load designs and load factor designs. This chart also provides a good double check on final quantities.

The weights shown include webs, flanges, and all secondary members (web stiffeners, diaphragms, cross frame, lateral systems, and gusset plates) plus a small allowance for weld metal, bolts, and shear connectors.

Both straight and curved box girder quantities may be estimated with the chart, using a 10 to 20 percent increase.

The chart should only be used for a lower bound estimate of curved I-girder weight. Roadway width and curvature greatly influence girder weight, including cross frames. An additional resource for estimating structural steel weights is the *NSBA Steel Span Weight Curves* published in 2016, which can be obtained off of their website.

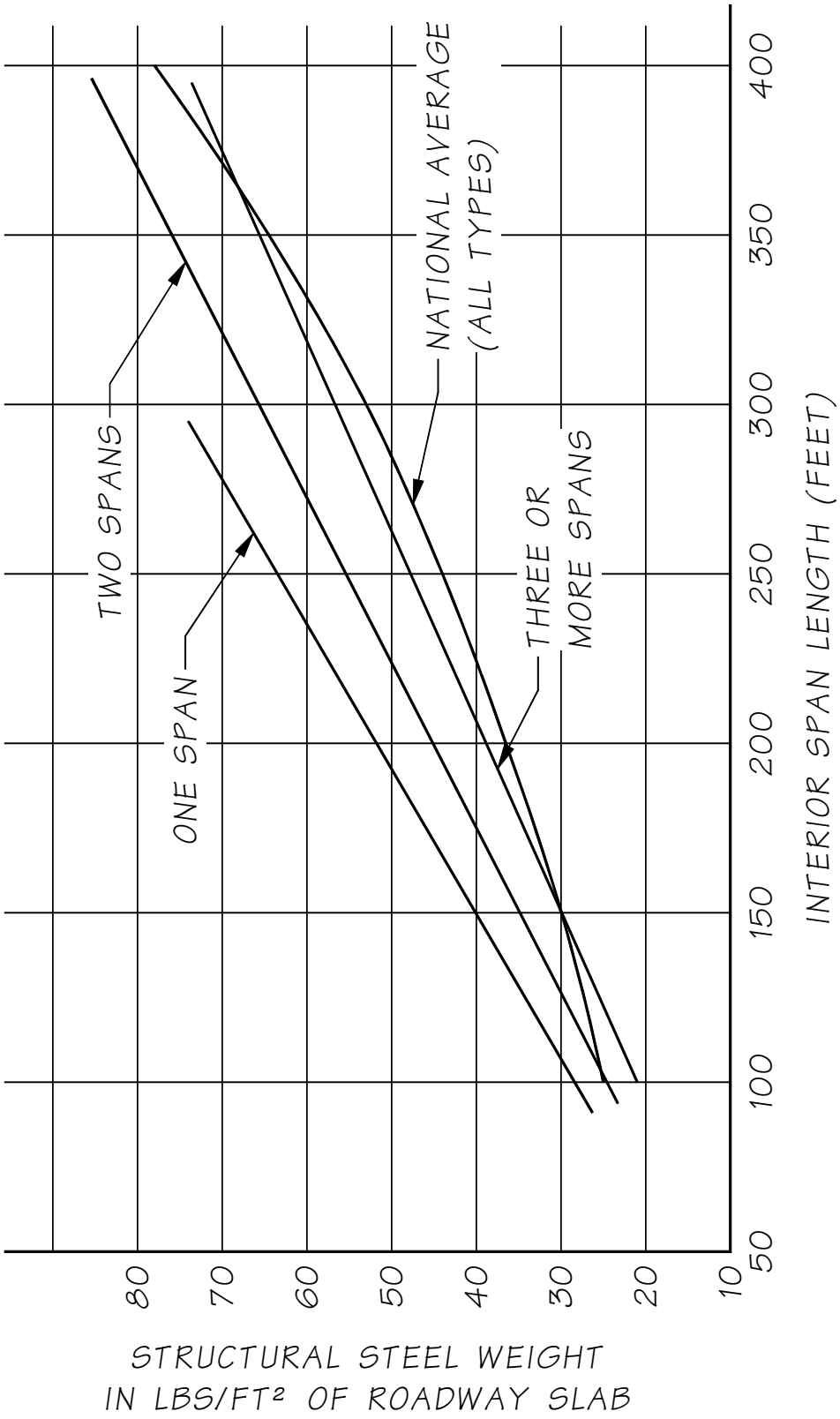

Composite Welded Steel Plate "I" Girder
Figure 6.1.4-1

6.1.5 Bridge Steels

Use AASHTO M 270/ASTM A 709 grades 50 or 50W for plate girders and box girders. AASHTO M 270 grades HPS 50W, HPS70W and HPS100W may only be used if allowed by the Bridge Design Engineer. HPS70W can be economical if used selectively in a hybrid design. For moderate spans HPS70W could be considered for the bottom flanges throughout and top flanges near interior piers.

For wide flange beams, use AASHTO M 270/ASTM A 709 Grade 50S or ASTM A 992. For ancillary members such as expansion joint headers, utility brackets, bearing components or small quantities of tees, channels, and angles, ASTM M 270/ASTM A 709 bridge steels are acceptable but are not required. In these cases, equivalent ASTM designated steels may be used.

The following table shows equivalent designations. Grades of steel are based on minimum yield point.

ASTM	ASTM A 709/ AASHTO M 270
A 36	Grade 36
A 572 gr 50	Grade 50
A 992 (W and rolled sections)	Grade 50S
A 588	Grade 50W
---	Grade HPS 50W**
---	Grade HPS 70W
---	Grade HPS l00W*

*Minimum yield strength is 90 ksi for plate thickness greater than 2½″.
**Avoid unless project has a large order with long lead times available.

A 992 or 50S steel is most commonly available in W shapes but is also available in other rolled sections including beams (S and M shapes), H-piles, tees, channels, and angles. All the materials in the table are prequalified under the Bridge Welding Code.

All main load-carrying members or components subject to tensile stress shall be identified in the plans and shall meet the minimum Charpy V-notch (CVN) fracture toughness values as specified in AASHTO LRFD Table 6.6.2-2, temperature zone 2. Fracture critical members or components shall also be designated in the plans.

Availability of weathering steel can be a problem for some sections. For example, steel suppliers do not stock angles or channels in weathering steel. Weathering steel wide flange and tee sections are difficult to locate or require a mill order. A mill order is roughly 10,000 pounds. ASTM A 709 and AASHTO M 270 bridge steels are not stocked by local service centers. The use of bridge steel should be restricted to large quantities such as found in typical plate or box girder projects. The older ASTM specification steels, such as A 36 or A 572, should be specified when a fabricator would be expected to purchase from local service centers.

Structural tubes and pipes are covered by other specifications. See the latest edition of the AISC *Manual of Steel Construction* for selection and availability. These materials are not considered prequalified under the Bridge Welding Code. They are covered under the Structural Welding Code AWS D1.1. Structural tubing ASTM A 500 shall

not be used for dynamic loading applications. ASTM A 1085 is a newer cold formed and welded HSS section specification that is a Gr 50 steel. Supplements for heat treating and CVNs are included and may also be specified. CVN tests are typically performed in the flats of the HSS square or rectangular tube sections. CVN values in the bend radius of the tubes are lower than values obtained in the flats. Heat treating of the sections can improve the values, but no data is currently available. ASTM A 1085 should also not be specified for dynamic loading applications. The designer should check with suppliers to ensure the size and quantities are readily available. In some cases minimum tonnage is required in order to obtain HSS sections in ASTM A 1085. Consult with the Steel Specialist for more information.

6.1.6 Plate Sizes

Readily available lengths and thicknesses of steel plates should be used to minimize costs. Tables of standard plate sizes have been published by various steel mills and should be used for guidance. These tables are available through the Steel Specialist or online.

In general, an individual plate should not exceed 12′-6″ feet in width, including camber requirements, or a length of about 60 feet. If either or both of these dimensions are exceeded, a butt splice is required and should be shown or specified on the plans. Some plates may be available in lengths over 90 feet, so web splice locations should be considered optional. Quenched and tempered plates are limited to 50 feet, based on oven size.

Plate thicknesses of less than 5⁄16 inches shall not be used for bridge applications.

Preferred plate thicknesses, English units, are as follows:

- 5⁄16″ to 7⁄8″ in 1⁄16″ increments
- 7⁄8″ to 1 1⁄4″ in 1⁄8″ increments
- 1 1⁄4″ to 4″ in 1⁄4″ increments

6.1.7 Girder Segment Sizes

Locate bolted field splices so that individual girder segments can be handled, shipped, and erected without imposing unreasonable requirements on the contractor. Crane limitations need to be considered in congested areas near traffic or buildings. Transportation route options between the girder fabricator and the bridge site can affect the size and weight of girder sections allowed. Underpasses with restricted vertical clearance in sag vertical curves can be obstructions to long, tall segments shipped upright. The Region Project Office should help determine the possible routes, and the restrictions they impose, during preliminary planning or early in the design phase.

Segment lengths should be limited to 150 feet, depending upon cross section. Long, slender segments can be difficult to handle and ship due to their flexibility. Horizontal curvature of girder segments may increase handling and shipping concerns. Out-to-out width of curved segments, especially box girders, should not exceed 14 feet without additional travel permits and requirements. Weight is seldom a controlling factor for I-girders. However, 40 tons is a practical limit for some fabricators. Limit weight to a maximum of 100 tons if delivery by truck is anticipated.

Consider the structure's span length and the above factors when determining girder segment lengths. In general, field splices should be located at dead load inflection points. When spans are short enough, some field splices can be designated optional if resulting segment lengths and weights meet the shipping criteria.

6.1.8 Computer Programs

The designer should consult the Steel Specialist to determine the computer program best suited for a particular bridge type.

Office practice and good engineering principles require that the results of any computer program or analysis be independently verified for accuracy. Also, programs with built-in code checks must be checked for default settings. Default settings may reflect old code or office practice may supersede the code that the program was written for.

6.1.9 Fasteners

All bolted connections shall be friction type (slip-critical). Assume Class B faying surfaces where inorganic zinc primer is used. If steel will be given a full paint system in the shop, the primed faying surfaces need to be masked to maintain the Class B surface.

Properties of High-Strength Bolts

Material	Bolt Diameter	Tensile Strength ksi	Yield Strength ksi
ASTM F 3125 GR A325 & GR F1852	½–1½ inch	120	92
	Over 1½		Not Available
ASTM A 449	¼–1 inch	120	92
	1⅛–1½ inch	105	81
	1¾ -3 inch	90	58
	Over 3		Not Available
ASTM F 1554			
Grade 105	¼–3 inch	125-150	105
Grade 55	¼–4 inch	75-95	55
Grade 36	¼–4 inch	58-80	36
ASTM F 3125 GR A490 & GR F2280	½–1½ inch	150-173 (max)	130
	Over 1½		Not Available
ASTM A 354 GR BD	¼–2½ inch	150	130
	Over 2½–4 inch	140	115
	Over 4		Not Available

General Guidelines for Steel Bolts

A. ASTM F 3125 GR A325 & GR F1852

High strength steel, headed bolts for use in structural joints. These bolts may be hot-dip galvanized but shall not be used in structures that are painted. Do not specify for anchor bolts.

B. ASTM A449

High strength steel bolts and studs for general applications including anchor bolts. Recommended for use where strengths equivalent to ASTM F 3125 GR A325 bolts are desired but custom geometry or lengths are required. Strengths for ASTM A 449 bolts are equivalent to GR A325 up to 1" diameter. If using bolts of larger diameter, a reduction in strength as indicated in the previous table shall be accounted for. These bolts may be hot-dip galvanized. Do not use these as anchor bolts for seismic applications due to low CVN impact toughness.

C. F1554 – Grade 105

Higher strength anchor bolts to be used for larger sizes (1½″ to 4″). When used in seismic applications, such as bridge bearings that resist lateral loads, specify supplemental CVN requirement S4 with a test temperature of -20°F. Lower grades may also be suitable for sign structure foundations. This specification should also be considered for seismic restrainer rods, and may be galvanized. The equivalent AASHTO M 314 shall not be specified as it doesn't include the CVN supplemental requirements.

D. ASTM F 3125 GR A490 & GR F2280

High strength alloy steel, headed bolts for use in structural joints. These bolts should not be galvanized, because of the high susceptibility to hydrogen embrittlement. In lieu of galvanizing, the application of an approved zinc rich paint may be specified. Do not specify for anchor bolts.

E. A354–Grade BD

High strength alloy steel bolts and studs. These are suitable for anchor bolts where strengths equal to ASTM F 3125 GR A490 bolts are desired. These bolts should not be galvanized. If used in seismic applications, specify minimum CVN toughness of 25 ft-lb at 40°F.

6.2 Girder Bridges

6.2.1 General

Once the material of choice, structural steel has been eclipsed by reinforced and prestressed concrete. Fabrication, material and life cycle costs have contributed to steel's relative cost disadvantage. Costs may be minimized by simplifying fabrication details, optimizing the number of girder lines, allowing for repetitive fabrication of components such as cross frames and stiffeners, and ensuring ease of shipping and erecting.

The specifications allow a combination of plastic design in positive moment regions and elastic design in negative moment regions. Plate girders, of the depths typically built in this state, have traditionally been designed to elastic limits or lower. High performance and weathering steel can be used to save weight and life cycle painting costs, thereby minimizing the cost gap between steel and concrete bridges.

I-girders may require accommodation for bridge security. Security fences may be installed within the confines of the superstructure to deter inappropriate access. Coordinate with the State Bridge and Structures Architect during final design where required.

6.2.2 I-Girders

Welded plate I-girders constitute the majority of steel girders designed by WSDOT. The I-girder represents an efficient use of material for maximizing stiffness. Its shortcoming is inefficiency in resisting shear. Office practice is to maintain constant web thickness and depth for short to medium span girders. Weight savings is achieved by minimizing the number of webs used for a given bridge. This also helps minimize fabrication, handling, and painting costs. Current office practice is to use a minimum of three girders to provide redundant load path structures. Two girder superstructures are considered non-redundant and hence, fracture critical.

Buckling behavior of relatively slender elements complicates steel plate girder design. Most strength calculations involve checks on buckling in some form. Local buckling can be a problem in flanges, webs, and stiffeners if compression is present. Also, overall stability shall be ensured throughout all stages of construction, with or without a bridge deck. The art of designing steel girders is to minimize material and fabrication expense while ensuring adequate strength, stiffness, and stability.

I-girders are an excellent shape for welding. All welds for the main components are easily accessible and visible for welding and inspection. The plates are oriented in the rolling direction to make good use of strength, ductility, and toughness of the structural steel. The web is attached to the top and bottom flanges with continuous fillet welds. Usually, they are made with automatic submerged arc welders. These welds are loaded parallel to the longitudinal axis and resist horizontal shear between the flanges and web. Minimum size welds based on plate thickness will satisfy strength and fatigue requirements in most cases. The flanges and webs are fabricated to full segment length with full penetration groove welds. These welds are inspected by ultrasound (UT) 100 percent. Tension welds, as designated in the plans, are also radiographed (RT) 100 percent. Office practice is to have flanges and webs fabricated full length before they are welded into the "I" shape. Weld splicing built-up sections results in poor fatigue strength and zones that are difficult to inspect. Quality welding and inspection requires good access for both.

6.2.3 Tub or Box Girders

Typical steel box girders for WSDOT are trapezoidal tub sections. Using single top flange plates to create true box sections is very uncommon when reinforced concrete decks are used. Tub girders will be referred to herein as box girders, as in AASHTO LRFD Article 6.11.

The top lateral system placed inside the girder is treated as an equivalent plate, closing the open section, to increase torsional stiffness before bridge deck curing. Although not required by the code, it helps ensure stability that may be overlooked during construction. Partial or temporary bracing may be used provided it is properly designed and installed. Dramatic construction failures have occurred due to insufficient bracing of box girders. Stability of the shape shall be ensured for all stages of construction in accordance with AASHTO LRFD Article 6.11.3. The cured bridge deck serves to close the section for torsional stiffness. Internal cross frames or diaphragms are used to maintain the shape and minimize distortion loading on individual plates and welds making up the box. Box segments will have considerable torsional stiffness when top lateral bracing is provided. This may make fit-up in the field difficult.

The ability to make box girders with high torsional stiffness makes them a popular choice for short radius curved structures. Curved box girders, because of inherent torsional stiffness, behave differently than curved I-girders. Curved box girder behavior can be approximated by the M/R method, rather than the V-load method, although true behavior can be easily modeled with modern finite element software. See curved girder references listed at the end of this chapter for complete description.

Straight box girders, when proportioned in accordance with AASHTO LRFD Article 6.11.2 may be designed without consideration of distortional stresses. The range of applicability for live load distribution is based on:

$$0.5 \leq N_L \,/\, N_b \leq 1.5 \qquad \text{(6.2.3-1)}$$

which limits the number of lanes loading each box. Wide box girder spacing, outside this range, will require additional live load analysis. Consideration must be given to differential deflection between boxes when designing the bridge deck. Generally, use of cross frames between boxes is limited to long spans with curvature.

Box girders shall have a single bearing per box for bridges with multiple box girders, not bearings under each web. If bearings are located under each web, distribution of loads is uncertain. For single box girder bridges, two bearings per box shall be used. Generally, plate diaphragms with access holes are used in place of pier cross frames.

With the exception of effects from inclined webs, top flanges and webs are designed as if they were part of individual I-girders.

The combined bottom flange is unique to box girders. In order to maximize web spacing while minimizing bottom flange width, place webs out of plumb on a slope of 1 in 4. Wide plates present two difficulties: excessive material between shop splices and buckling behavior in compression zones (interior piers). To keep weight and plate thickness within reason, it is often necessary to stiffen the bottom flange in compression with longitudinal stiffeners. Office practice is to use tee sections for longitudinal stiffeners and channel bracing at cross frame locations (transverse stiffeners). If possible, bottom flange stiffeners are terminated at field splices.

Otherwise, carefully ground weld terminations are needed in tension regions with high stress range. Due to the transverse flexibility of thin wide plates, stiffener plates are welded across the bottom flange at cross frame locations, combined with web vertical stiffeners. For the design of the bottom flange in compression, see AASHTO LRFD Articles 6.11.8.2 and 6.11.11.2.

6.2.4 Fracture Critical Superstructures

Non-redundant, fracture critical single tub superstructures, and twin I-girder systems, may sometimes be justified. In which case, approval for this bridge type must be obtained from the Bridge Design Engineer. Conditions that favor this option are narrow one lane ramps, especially with tightly curved alignments, at locations within existing mainline interchanges. Flyover ramps often fall into these constraints. The box section allows in-depth inspection access without significant disruption to mainline traffic. UBIT access over urban interstate lanes is becoming increasingly difficult to obtain.

Where curvature is significant, the box section is a stiffer, more efficient load carrying system than a twin I-girder system. If a twin I-girder system is to be used, approval must also be secured. Some form of permanent false decking or other inspection access needs to be included over mainline lanes that will be difficult to close for UBIT access. This access needs to be appropriate for fracture critical inspections. If curvature is not severe, the twin I-girder system may prove to be more economical than a single box.

The maximum roadway width for either a single box or twin I-girder superstructure is about 27 feet. Where roadway width exceeds this, additional girders shall be used. Mainline structures, usually exceeding 38 feet in width, will require a minimum of three webs, with four webs being the preferred minimum.

Increased vertical clearance from mainline traffic should be obtained for either of these bridge types. The desired minimum is 20 feet. Box sections tend to offer greater stiffness than equal depth I-girders, especially on curved alignment. The web depth may be reduced below AASHTO LRFD Table 2.5.2.6.3-1 minimums provided live load deflection criteria are met. However, avoid web depth less than 5′-0″ so that inspection access is within reason. The desirable minimum web depth for boxes is 6′-6″. Box sections with web depth of 6′-6″ should be capable of interior spans up to 250 feet. Main spans of 150 feet should be considered the low end of this girder type's economical range. Because of the proximity of flyover ramps to high numbers of observers, attempt to streamline their superstructure depths where economical and deflection criteria can be achieved.

Consider use of high performance steels, AASHTO M270 grades HPS50W or HPS70W for these girder types. Grades of steel with equal CVN toughness may be considered, however the improved through-thickness properties of the HPS grades should also be considered. If practical, maintain a maximum flange thickness of 2″ when using HPS for better properties and plate availability. The improved toughness of HPS will lower the chance of sudden crack propagation if a crack does become visible to casual observation. HPS50W is not commonly used and the Steel Specialist should be consulted before specifying this grade of steel in a structure.

The limit state load modifier relating to redundancy, $\eta_r = 1.05$, as specified in AASHTO LRFD Article 1.3.4 shall be used in the design of non-redundant steel structures. However, for load rating non-redundant structures, a system factor of 0.85 is currently required in the AASHTO *Manual for Bridge Evaluation* (MBE) on the capacity of the girders, which is not consistent with the redundancy load modifier used in design. The designer shall design some reserve capacity in the girders so the load rating value for HL93 Inventory is greater than or equal to 1.0.

The AASHTO LRFD approximate live load distribution factors are not applicable to these girder types. The level rule or the preferred refined analysis shall be used. Where highly curved, only a refined analysis shall be used.

6.3 Design of I-Girders

6.3.1 *Limit States for* AASHTO LRFD

Structural components shall be proportioned to satisfy the requirements of strength, extreme event, service, and fatigue limit states as outlined in AASHTO LRFD Articles1.3.2 and 6.5.

Service limit states are included in Service I and Service II load combinations. Service I load combination is used to check the live load deflection limitations of AASHTO LRFD Article 2.5.2.6. Service II places limits on permanent deflection, no yielding, slenderness of the web in compression, and slip of bolted connections.

The fatigue live load specified in AASHTO LRFD Article 3.6.1.4 shall be used for checking girder details in accordance with Article 6.6. A single fatigue truck, without lane loading or variable axle spacing, is placed for maximum and minimum effect to a detail under investigation. The impact is 15 percent, regardless of span length. The load factor is 1.5. It is generally possible to meet the constant amplitude fatigue limit (CAFL) requirement for details with good fatigue performance. Limiting the calculated fatigue range to the CAFL ensures infinite fatigue life. Webs shall be checked for fatigue loading in accordance with AASHTO LRFD Article 6.10.5.3, using the calculated fatigue stress range for flexure or shear. Shear connector spacing shall be according to AASHTO LRFD Article 6.10.10. Generally, the fatigue resistance (Zr) for ⅞″ diameter shear connectors can be taken as 4.2 kips for an infinite number of cycles (CAFL = 4.2 kips).

Flanges and webs shall meet strength limit state requirements for both construction and final phases. Constructability requirements for flanges and webs are covered in AASHTO LRFD Article 6.10.3. Flexure resistance is specified in AASHTO LRFD Articles 6.10.7 and 6.10.8; shear resistance is specified in AASHTO LRFD Article 6.10.9

Pier cross frames shall be designed for seismic loading, extreme event load combination. Bolts are treated as bearing type connections with AASHTO LRFD Article 6.5.4.2 resistance factors. The resistance factor for all other members is 1.0 at extreme limit state.

6.3.2 *Composite Section*

Live load plus impact shall be applied to the transformed composite section using Es/Ec, commonly denoted n. Long-term loading (dead load of barriers, signs, luminaries, overlays, etc.) is applied to the transformed composite section using 3n. Positive moments are applied to these composite sections accordingly; both for service and strength limit states. The bridge deck may be considered effective in negative moment regions provided tensile stresses in the deck are below the modulus of rupture. This is generally possible for Service I load combination and fatigue analysis. For strength limit state loadings, the composite section includes longitudinal reinforcing while the bridge deck is ignored.

6.3.3 Flanges

Flange thickness is limited to 4″ maximum in typical bridge plate, but the desirable maximum is 3″. Structural Steel Notes on contract plans shall require all plates for flange material to be purchased such that the ratio of reduction of thickness from a slab to plate shall be at least 3.0:1. This requirement helps ensure the plate material has limited inclusions and micro-porosity that can create problems during cutting and welding.

As an alternative, plates for flange material greater than 2” thick not meeting the 3.0:1 ratio of reduction may be supplied based on acceptable ultrasonic testing (UT) inspection in accordance with ASTM A 578. UT scanning and acceptance shall be as follows:

- The entire plate shall be scanned in accordance with ASTM A 578 and shall meet Acceptance Standard C, and
- Plate material within 12-inches of flange complete joint penetration splice welds shall be scanned in accordance with ASTM A 578 Supplementary S1 and shall meet Acceptance Standard C

The number of plate thicknesses used for a given project should be kept to a minimum. Generally, the bottom flange should be wider than the top flange. Flange width changes should be made at bolted field splices. Thickness transitions are best done at welded splices. AASHTO LRFD Article 6.13.6.1.5 requires fill plates at bolted splices to be developed, if thicker than ¼″. Since this requires a significant increase in the number of bolts for thick fill plates, keeping the thickness transition ¼″ or less by widening pier segment flanges can be a better solution. Between field splices, flange width should be kept constant.

6.3.4 Webs

Maintain constant web thickness throughout the structure. If different web thickness is needed, the transition shall be at a welded splice. Horizontal web splices are not needed unless web height exceeds 12′-6″. Vertical web splices for girders should be shown on the plans in an elevation view with additional splices made optional to the fabricator. All welded web splices on exterior faces of exterior girders and in tension zones elsewhere shall be ground smooth. Web splices of interior girders need not be ground in compression zones.

6.3.5 Transverse Stiffeners

Transverse stiffeners shall be used in pairs at cross frame locations on interior girders and on the inside of webs of exterior girders. They shall be welded to the top flange, bottom flange and web at these locations. This detail is considered fatigue category C’ for longitudinal flange stress. Stiffeners used between cross frames shall be located on one side of the web, welded to the compression flange, and cut short of the tension flange. Stiffeners located between cross frames in regions of stress reversal shall be welded to one side of the web and cut short of both flanges. Alternatively, they may be welded to both flanges if fatigue Category C’ is checked. Transverse stiffeners may be dropped when not needed for strength. If cross frame spacing is less than 3 times the web depth, additional stiffeners may only be necessary near piers.

Stiffened webs require end panels to anchor the first tension field. The jacking stiffener to bearing stiffeners space shall not be used as the anchor panel. The first transverse stiffener is to be placed at no greater spacing than 1.5 times the web depth from the bearing or jacking stiffener.

Transverse stiffeners shall be designed and detailed to meet AASHTO LRFD Article 6.10.11.1. Where they are used to connect cross frames, they should be a minimum width of 8″ to accommodate two bolt rows.

6.3.6 Longitudinal Stiffeners

On long spans where web depths exceed 10 feet, comparative cost evaluations shall be made to determine whether the use of longitudinal stiffeners will be economical. The use of longitudinal stiffeners may be economical on webs 10 feet deep or greater. Weld terminations for longitudinal stiffeners are fatigue prone details. Longitudinal stiffener plates shall be continuous, splices being made with full penetration welds before being attached to webs. Transverse stiffeners should be pieced to allow passage of longitudinal stiffeners.

Design of longitudinal stiffeners is covered by AASHTO LRFD Article 6.10.11.3.

6.3.7 Bearing Stiffeners

Stiffeners are required at all bearings to enable the reaction to be transmitted from the web to the bearing. These stiffeners are designated as columns, therefore, must be vertical under total dead load. The connection of the bearing stiffener to flanges consists of partial penetration groove welds, of sufficient size to transmit design loads.

Pier cross frames may transfer large seismic lateral loads through top and bottom connections. Weld size must be designed to ensure adequate load path from deck and cross frames into bearings.

Design of bearing stiffeners is covered by AASHTO LRFD Article 6.10.11.2.

6.3.8 Cross Frames

The primary function of intermediate cross frames is to provide stability to individual girders or flanges. Cross frames or diaphragms are required at each support to brace girders; they should be as near to full-depth as practical. Cross frames share live load distribution between girders with the concrete deck. The approximate AASHTO LRFD live load distribution factors were based on the absence of intermediate cross frames. Where cross frames are present, the exterior girder distribution factors are also determined according to AASHTO LRFD Article 4.6.2.2.2d (conventional approximation for loads on piles). On curved bridges, the cross frames also resist twisting of the superstructure. Pier cross frames are subjected to lateral loads from wind, earthquake, and curvature. These forces are transmitted from the roadway slab to the bearings by way of the pier cross frames. Intermediate cross frames also resist wind load to the lower half of the girders. The primary load path for wind is the concrete deck and pier diaphragms. Wind load on the bottom flange is shed incrementally to the deck through intermediate cross frames. The essential function, however, is to brace the compression flanges for all stages of construction and service life. As such, continuous span girders require bottom flange bracing near interior supports.

Office practice requires intermediate cross frames, at spacing consistent with design assumptions. The 25 foot maximum spacing of older specifications is not maintained in the AASHTO LRFD code. A rectangular grid of girders and cross frames is not significantly stiff laterally before the deck is cured. Both wind and deck placement can cause noticeable deflections. In the case of deck placement, permanent sideway and rotation of the steel framing may result. Some form of temporary or permanent lateral bracing is therefore required.

Cross frames and connections should be detailed for repetitive fabrication, adjustment in the field, and openness for inspection and painting. Cross frames consisting of back-to-back angles separated by gusset plates are not permitted. These are difficult to repaint. Cross frames are generally patterned as K-frames or as X-frames. Typically the configuration selected is based on the most efficient geometry. The diagonals should closely approach a slope of 1:1 or 45°. Avoid conflicts with utilities passing between the girders. Detailing of cross frames should follow guidelines of economical steel bridge details promoted by the National Steel Bridge Alliance. Office practice is to bolt rather than weld individual pieces. Oversize holes are not allowed in cross frame connections if girders are curved.

Intermediate cross frames for straight girders with little or no skew should be designed as secondary members. Choose members that meet minimum slenderness requirements and design connections only for anticipated loads, not for 75 percent strength of member.

In general, cross frames should be installed parallel to piers for skew angles of 0° to 20°. For greater skew angles, other arrangements may be used. Consult with the Design Unit Manager or the Steel Specialist for special requirements.

Intermediate cross frames for curved I-girders require special consideration. Cross frames for curved girder bridges are main load carrying members and tension components should be so designated in the plans. For highly curved systems, it is more efficient to keep members and connections concentric, as live loads can be significant. Welded connections should be carefully evaluated for fatigue.

Web stiffeners at cross frames shall be welded to top and bottom flanges. This practice minimizes out-of-plane bending of the girder web.

Bridge widening requires special attention to girder stability during bridge deck placement. Lateral movement and rotation has been common with widening projects around the country. Narrow framing, such as a two girder widening, requires bracing to an existing structure. A common method for bracing is to install cross frames (in the bay between existing and new girders) with only one bolt per connection to allow for girder differential deflection but no rotation. Remaining bolts can be installed through field-drilled holes after the slab has cured.

6.3.9 Bottom Laterals

Bottom lateral systems are expensive to install permanently. If possible, they should be avoided in favor of alternative bracing methods. They are seldom required in the completed structure, but may contribute to nuisance fatigue cracking or fracture in the main girders.

The primary function of a bottom lateral system is to stabilize the girders against lateral loads and translation before the bridge deck hardens. The layout pattern is based on number of girder lines, girder spacing, and cross frame spacing. Cost considerations should include geometry, repetition, number, and size of connections. If used, limit bottom laterals to one or two bays.

For both straight and curved structures, bottom laterals carry dead and live loads, in proportion to distance from the neutral axis. They should be modeled in the structure to determine the actual forces the member's experience. Since they carry slab dead load, they should be accounted for when calculating camber.

Where lateral gusset plates are fillet welded to girder webs, the fatigue stress range in the girder is limited to Category E without transition radius, or Category D with carefully made transition radius. The gusset plates should be bolted to the girder web in regions of high tension stress range.

For widening projects, bottom laterals are not needed since the new structure can be braced against the existing structure during construction. Framing which is adequately braced should not require bottom laterals.

6.3.10 Bolted Field Splice for Girders

Field splices shall be bolted. Splices are usually located at the dead load inflection point to minimize the design bending moment. See AASHTO LRFD Articles 6.13.2 and 6.13.6.1 for bolted splice design requirements. Designing web splices is outlined in AASHTO LRFD Article 6.13.6.1.4b. Bolted web splices should not involve thin fill material. Thickness transitions for webs, if needed, should be done with welded shop splices.

Flange splice design is outlined in AASHTO LRFD Article 6.13.6.1.4c. For splice plates at least ⅜″ thick and ⅞″ diameter bolts, threads may be excluded from all shear planes for a 25 percent increase in strength, per AASHTO LRFD Article 6.13.2.7. Bolts designed with threads excluded from shear planes shall be designated as such in the plans. Generally, bolts in girder field splices may be designed for double shear.

A requirement has been added for developing fillers used in bolted splices, AASHTO LRFD Article 6.13.6.1.5. When fill plates are greater than ¼″, the splice or filler needs to be extended for additional bolts. As filler thickness increases, the shear resistance of bolts decreases. A way of minimizing filler thickness is to transition flange width for pier segments. Using equal plate thickness by this method has the added benefit of reducing the number of plate sizes in a project.

Note: A major revision to the design of bolted splices was approved by AASTHO in 2016, but has yet to be published. The revised methodology and or the current provisions in the AASTHO 7th Edition may be used for design. The new provisions were developed to simplify the design process. Consult the Steel Specialist for additional information and guidance.

Splice bolts shall be checked for Strength load combinations and slip at Service II load combination. When faying surfaces are blasted and primed with inorganic zinc paint, a Class B surface condition is assumed.

Fabrication of girder splices is covered by *Standard Specifications* Sections 6-03.3(27) and 6-03.3(28). Method of field assembly is covered by section 6-03.3(32) and bolting inspection and installation by Section 6-03.3(33). Since bolted joints have some play due to differences in bolt diameter and hole size, field splices are drilled while segments are set in proper alignment in the shop. The joint is pinned (pin diameter equals hole size to prohibit movement) for shop assembly and also during initial field fit-up. Normally, this ensures repeatability of joint alignment from shop to field.

6.3.11 Camber

Camber shall include effects of profile grade, superelevation, anticipated dead load deflections, and bridge deck shrinkage (if measurable). Permanent girder deflections shall be shown in the plans in the form of camber diagrams and tables. Dead load deflections are due to steel self-weight, bridge deck dead load, and superimposed dead loads such as overlay, sidewalks, and barriers. Since fabricated camber and girder erection have inherent variability, bridge deck form height is adjusted after steel has been set. Although a constant distance from top of web to top of deck is assumed, this will vary along the girders. Bridge deck forms without adjustment for height are not allowed. Girders shall be profiled once fully erected, and before bridge deck forms are installed. See *Standard Specifications* Section 6-03.3(39).

Girder camber is established at three stages of construction. First, girder webs are cut from plates so that the completed girder segment will assume the shape of reverse dead load deflections superimposed on profile grade. Only minor heat corrections may be made in the shop to meet the camber tolerance of the *Bridge Welding Code* AWS D1.5 Chapter 3.5. Camber for plate girders is not induced by mechanical force. The fabricated girder segment will incorporate the as-cut web shape and minor amounts of welding distortion. Next, the girder segments are brought together for shop assembly. Field splices are drilled as the segments are placed in position to fit profile grade plus total dead load deflection (no load condition). Finally, the segments are erected, sometimes with supports at field splices. There may be slight angle changes at field splices, resulting in altered girder profiles. Errors at mid-span can be between one to two inches at this stage.

The following is a general outline for calculating camber and is based on girders having shear studs the full length of the bridge.

Two camber curves are required, one for total dead load plus bridge deck formwork and one for steel framing self-weight. The difference between these curves is used to set bridge deck forms.

Girder dead load deflection is determined by using various computer programs. Many steel girder design programs incorporate camber calculation. Girder self-weight shall include the basic section plus stiffeners, cross frames, welds, shear studs, etc. These items may be accounted for by adding an appropriate percentage of basic section weight (15 percent is a good rule of thumb). Total dead load camber shall consist of deflection due to:

A. Steel weight, applied to steel section. Include 10 psf bridge deck formwork allowance in the total dead load camber, but not in the steel weight camber. The effect of removing formwork is small in relation to first placement, due to composite action between girders and bridge deck. It isn't necessary to account for the removal.

B. Bridge deck weight, applied to steel section. This should be the majority of dead load deflection.

C. Traffic barriers, sidewalks, and overlays, applied to long-term composite section using 3n. Do not include weight of future overlays in the camber calculations.

D. Bridge deck shrinkage (if ≥ ¾″).

Bridge deck dead load deflection will require the designer to exercise some judgment concerning degree of analysis. A two or three span bridge of regular proportions, for example, should not require a rigorous analysis. The bridge deck may be assumed to be placed instantaneously on the steel section only. Generally, due to creep, deflections and stresses slowly assume a state consistent with instantaneous bridge deck placement. For unusual girder arrangements (multiple spans, unbalanced spans, curved structures, etc.), and especially structures with in-span hinges, an analysis coupled with a bridge deck placement sequence shall be used. This would require an incremental analysis where previous bridge deck placement are treated as composite sections (using a modulus of elasticity for concrete based on age at time of second pour) and successive bridge deck placements are added on non-composite sections. Each bridge deck placement requires a separate deflection analysis. The total effect of bridge deck construction is the superposition of each bridge deck placement. This analysis can also be accomplished using staged construction features in finite element analysis software. With the availability of these staged construction features, performing an incremental analysis should be considered for all structures with 3 or more spans.

Traffic barriers, sidewalks, overlays, and other items constructed after the bridge deck placement should be analyzed as if applied to the long-term composite section full length of the bridge. The modulus of elasticity of the slab concrete shall be reduced to one third of its short term value. For example, if f′c = 4000 psi, then use a value of n = 24.

Bridge deck shrinkage has a varying degree of effect on superstructure deflections. The designer shall use some judgment in evaluating this effect on camber. Bridge deck shrinkage should be the smallest portion of the total camber. It has greater influence on shallower girder sections, say rolled beams. Simple spans will see more effect than continuous spans. For medium to long span continuous girders (spans over 200 feet without any in-span hinges), bridge deck shrinkage deflection can be ignored. For simple span girders between 150 and 250 feet, the deflection should not exceed 1″. For calculation, apply a shrinkage strain of 0.0002 to the long-term composite section using 3n.

In addition to girder deflections, show girder rotations at bearing stiffeners. This will allow shop plan detailers to compensate for rotations so that bearing stiffeners will be vertical in their final position.

Camber tolerance is governed by the *Bridge Welding Code* AWS D1.5, chapter 3.5. A note of clarification is added to the plan camber diagram: "For the purpose of measuring camber tolerance during shop assembly, assume top flanges are embedded in concrete without a designed haunch." This allows a high or low deviation from the theoretical curve, otherwise no negative camber tolerance is allowed.

A screed adjustment diagram shall be included with the camber diagram. This diagram, with dimension table, shall be the remaining calculated deflection just prior to bridge deck placement, taking into account the estimated weight of deck formwork and deck reinforcing. The weight of bridge deck formwork may be taken equal to 10 psf, or the assumed formwork weight used to calculate total camber. The weight of reinforcing may be taken as the span average distributed uniformly. The screed adjustment should equal: (Total Camber – Steel Camber)–(deflection due to forms + rebar). The screed adjustment shall be shown at each girder line. This will indicate how much twisting is anticipated during bridge deck placement, primarily due to span curvature and/or skew. These adjustments shall be applied to theoretical profile grades, regardless of actual steel framing elevations. The adjustments shall be designated "C". The diagram shall be designated as "Screed Setting Adjustment Diagram." The table of dimensions shall be kept separate from the girder camber, but at consistent locations along girders. That is, at $1/10^{th}$ points or panel points. A cross section view shall be included with curved span bridges, showing effects of twisting. See Appendix 6.4-A6.

For the purpose of setting bridge deck soffit elevations, a correction shall be made to the plan haunch dimension based on the difference between theoretical flange locations and actual profiled elevations. The presence of bridge deck formwork shall be noted at the time of the survey. The presence of false decking need not be accounted for in design or the survey.

6.3.12 Bridge Deck Placement Sequence

The bridge deck shall be placed in a prescribed sequence allowing the concrete in each segment to shrink with minor influence on other segments. Negative moment regions (segments over interior piers) must be placed after positive moment regions have had time to cure. This helps minimize shrinkage cracking and provides manageable volumes of concrete for a work shift.

Positive moment regions should be placed first, while negative moment regions are placed last. Successive segments should not be placed until previous segments attain sufficient strength, typically about 2000 psi or cure of 3 to 7 days. This general guideline is sufficient for typical, well balanced span, however the designer should check slab tensile stresses imposed on adjoining span segments. Required concrete strength can be increased, but needless delays waiting for higher strengths should be avoided. Also, the contractor should be given the option of placing positive moment segments with little influence on each other at a convenient rate, regardless of curing time. That is, segments separated by a span could be placed the same or next day without any harm. These can be lumped in the same pour sequence.

6.3.13 Bridge Bearings for Steel Girders

Make bearing selection consistent with required motions and capacities. The following order is the general preference, high to low:

- No bearings (integral abutments or piers)
- Elastomeric bearings
- Fabric pad bearings
- Disk bearings
- Spherical bearings

6.3.14 Surface Roughness and Hardness

The standard measure of surface roughness is the microinch value. Surface roughness shall be shown on the plans for all surfaces for which machining is required unless covered by the *Standard Specifications* or Special Provisions. Consult *Machinery's Handbook* for common machining practice. Edge finishing for steel girders is covered in *Standard Specifications* Section 6-03.3(14). Surface hardness of thermal cut girder flanges is also controlled.

Following is a brief description of some finishes:

1000 A surface produced by thermal cutting

500 A rough surface finish typical of "as rolled" sections. Suitable for surfaces that do not contact other parts and for bearing plates on grout.

250 A fairly smooth surface. Suitable for connections and surfaces not in moving contact with other surfaces. This finish is typical of ground edges in tension zones of flanges.

125 A fine machine finish resulting from careful machine work using high speeds and taking light cuts. It may be produced by all methods of direct machining under proper conditions. Suitable for steel to steel bearing or rotational surfaces including rockers and pins.

63 A smooth machine finish suitable for high stress steel to steel bearing surfaces including roller bearings on bed plates.

32 An extremely fine machine finish suitable for steel sliding parts. This surface is generally produced by grinding.

16 A very smooth, very fine surface only used on high stress sliding bearings. This surface is generally produced by polishing.

For examples, see Figure 6.3.14-1.

For stainless steel sliding surfaces, specify a #8 mirror finish. This is a different method of measurement and reflects industry standards for polishing. No units are implied. See the Steel Specialist for examples of these finishes.

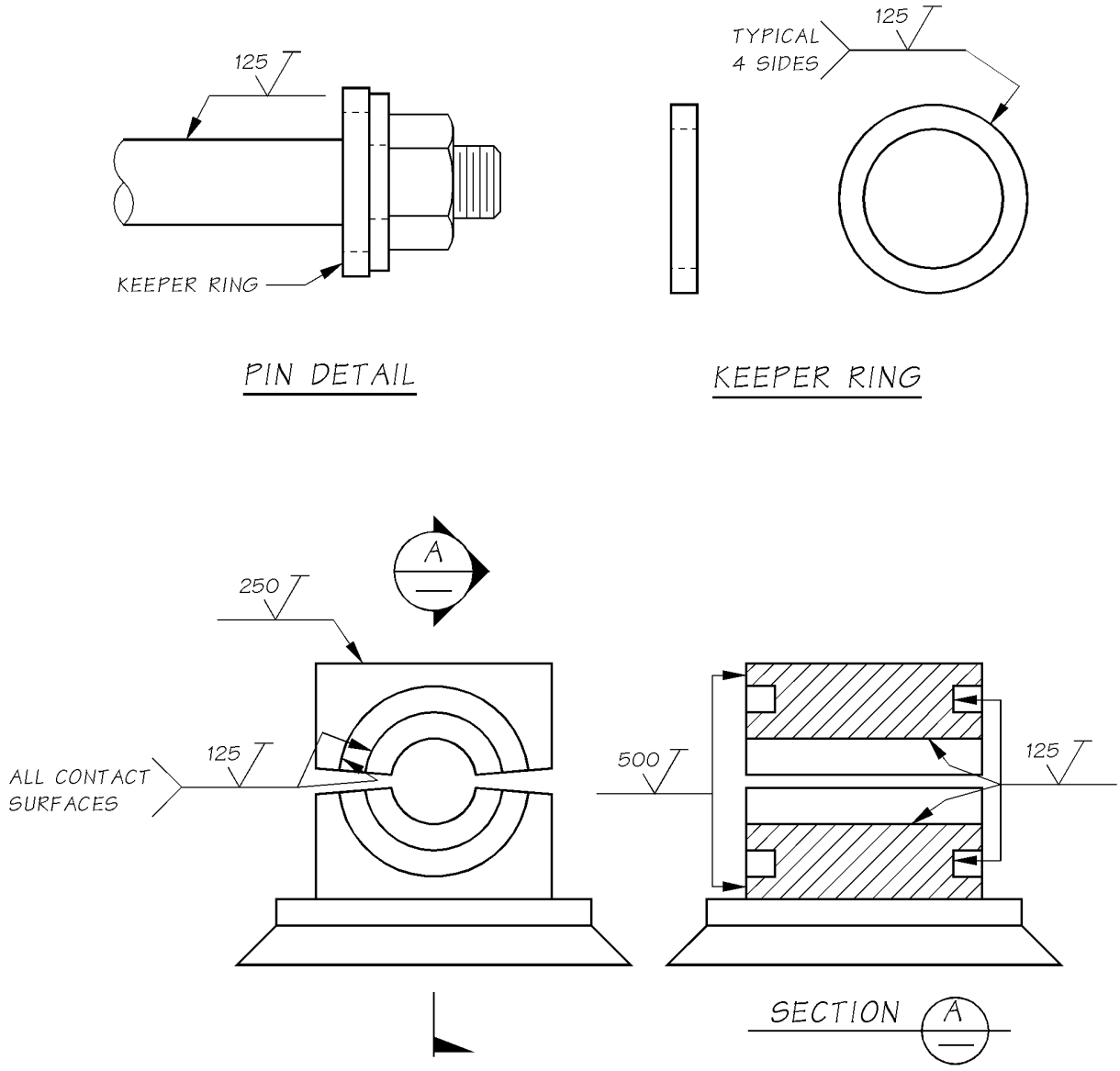

Surface Finish Examples
Figure 6.3.14-1

6.3.15 Welding

All structural steel and rebar welding shall be in accordance with the *Standard Specifications*, amendments thereto and the special provisions. The *Standard Specifications* currently calls for welding structural steel according to the AASHTO/AWS D1.5 *Bridge Welding Code* (BWC), latest edition and the latest edition of the AWS D1.1 *Structural Weld Code*. The designers should be especially aware of current amendments to the following sections of the *Standard Specifications* Sections 6-03.3(25) and 6-03.3(25)A.

Exceptions to both codes and additional requirements are shown in the *Standard Specifications* and the special provisions.

Standard symbols for welding, brazing, and nondestructive examination can be found in the ANSI/AWS A 2.4 by that name. This publication is a very good reference for definitions of abbreviations and acronyms related to welding.

The designer shall consider the limits of allowable fatigue stress, specified for the various welds used to connect the main load carrying members of a steel structure. See AASHTO LRFD Article 6.6. Most plate girder framing can be detailed in a way that provides fatigue category C or better.

The minimum fillet weld size shall be as shown in the following table. Weld size is determined by the thicker of the two parts joined unless a larger size is required by calculated stress. The weld size need not exceed the thickness of the thinner part joined.

Base Metal Thickness of Thicker Part Joined	Minimum Size of Fillet Weld
To ¾″ inclusive	¼″
Over ¾″	5⁄16″

In general, the maximum size fillet weld which may be made with a single pass is 5⁄16 inch for submerged arc (SAW), gas metal arc (GMAW), and flux-cored arc welding (FCAW) processes. The maximum size fillet weld made in a single pass is ¼ inch for the shielded metal arc welding (SMAW) process.

The major difference between AWS D1.1 and D1.5 is the welding process qualification. The only process deemed prequalified in D1.5 is shielded metal arc (SMAW). All others must be qualified by test. Qualification of AASHTO M 270 grade 50W (ASTM A709 grade 50W) in Section 5 of D1.5 qualifies the welding of all AASHTO approved steels with a minimum specified yield of 50 ksi or less. Bridge fabricators generally qualify to M 270 grade 50W (A709 grade 50W).

All bridge welding procedure specifications (WPS) submitted for approval shall be accompanied by a procedure qualification record (PQR), a record of test specimens examination and approval except for SMAW prequalified. Some handy reference aids in checking WPS in addition to PQR are:

Matching filler metal requirements are found in BWC Section 4.

Prequalified joints are found in BWC Section 2.

AWS electrode specifications and classifications can be obtained from the structural steel specialist. Many electrode specification sheets may be found online.

Lincoln Electric Arc Welding Handbook.

Many of Lincoln Electric's published materials and literature are available through those designers and supervisors who have attended Lincoln Electric's weld design seminars.

WSDOT *Standard Specifications* for minimum preheat temperatures for main members.

Notes: Electrogas and electroslag welding processes are not allowed in WSDOT work. Narrow gap improved electroslag welding is allowed on a case-by-case basis.

Often in the rehabilitation of existing steel structures, it is desirable to weld, in some form, to the in-place structural steel. Often it is not possible to determine from the original contract documents whether or not the existing steel contains high or low carbon content and carbon equivalence. Small coupons from the steel can be taken for a chemical analysis. Labs are available in the Seattle and Portland areas that will do this service quickly. Suitable weld procedures can be prepared once the chemical content is measured.

6.3.16 Shop Assembly

In most cases, a simple progressive longitudinal shop assembly is sufficient to ensure proper fit of subsections, field splices, and cross frame connections, etc., in the field. Due to geometric complexity of some structures, progressive transverse assembly, in combination with progressive longitudinal assembly may be desirable. The designer shall consult with the Design Unit Manager and the Steel Specialist to determine the extent of shop assembly and clarification of *Standard Specifications* Section 6-03.3(28) A. If other than line girder progressive assembly is required, the method must be included by special provision. High skews or curved girders should be done with some form of transverse and longitudinal assembly. Complex curved and skewed box girder framing should be done with full transverse progressive assembly. For transverse assembly, specify cross frame and pier diaphragm connections to be completed while assembled.

During shop assembly, girder segments are blocked or supported in the no-load condition (no gravity effects). Simple line girder assembly is often done in the horizontal position. The primary reason for shop assembly is to ensure correct alignment for girder field splices. For straight bridges, cross frame connections are normally done by numerically controlled (NC) drilling (no trial shop assembly). This is generally of sufficient accuracy to allow cross frame installation in the field without corrective action such as reaming.

For curved I-girders, cross frames are to be fabricated to fit the no-load condition. During field erection, girder segments will need to be adjusted or supported to make fit-up possible. This is not unreasonable since curved girders are not self-supporting before cross frames are in place. However, the method results in out-of-plumb girders. For most cases, making theoretical compensation to arrive at plumb in final condition is not justified.

Highly skewed girders present difficult fit-up conditions. Setting screeds is also complicated because of differential deflections between neighboring girders. Design of cross frames and pier diaphragms must take into account twist and rotations of webs during construction. This situation should be carefully studied by finite element analysis to determine amount and type of movement anticipated during construction. Details should be consistent. Unlike curved girders rotating away from plumb at midspan, girder webs for skewed construction should be kept plumb at piers. The NSBA has published *Skewed and Curved Steel I-girder Bridge Fit*, which is a good reference on how to deal with fit-up of skewed and curved girders.

6.4 Plan Details

6.4.1 General

Detailing practice shall follow industry standards. Designations for structural steel can be found in AISC *Detailing for Steel Construction*. Previous plans are a good reference for detailing practices. Detailing should also conform to national unified guidelines published by AASHTO/NSBA Steel Bridge Collaboration listed in Section 6.1.1.

Details for plate girders are continually being revised or improved to keep up with changing fabrication practice, labor and material costs, and understanding of fatigue behavior. Uses and demands for steel girder bridges are also changing. Cost benefits for individual details vary from shop to shop and even from time to time. For these reasons, previous plan details can be guides but should not be considered standards. Options should be made available to accommodate all prospective fabricators. For example, small shops prefer shorter, lighter girder segments. Some shops are able to purchase and handle plates over 90 feet long. Large shop assembly may be prohibitive for fabricators without adequate space.

WSDOT practice shall be to use field bolted connections. Cross frame members may be shop bolted or welded assemblies and shall be shipped to the field in one unit. Connections of bolted cross frame assemblies shall be fully tensioned prior to shipping. Cross frame assemblies shall be field bolted to girders during erection.

6.4.2 Structural Steel Notes

Due to their dynamic nature, the structural steel notes are not shown in this manual. They are available as standards in the drafting system. Since each project has unique requirements, these notes should be edited accordingly. Material specifications are constantly changing. Separate sets of notes are available for "I" and box girders.

6.4.3 Framing Plan

The Framing Plan shall show plan locations of girders, cross frames, and attachments and show ties between the survey line, girder lines, backs of pavement seats, and centerlines of piers. Locate panel points (cross frame locations). Show general arrangement of bottom laterals. Provide geometry, bearing lines, and transverse intermediate stiffener locations. Show field splice locations. Map out different lateral connection details. See Bridge Standard Drawing 6.4-A1.

6.4.4 Girder Elevation

The Girder Elevation is used to define flanges, webs, and their splice locations. Show shear connector spacing, location, and number across the flange. Show shear connector locations on flange splice plates or specifically call out when no connectors are required on splice plates. Locate transverse stiffeners and show where they are cut short of tension flanges. Show the tension regions of the girders for the purpose of ordering plate material, inspection methods (NDE), and *Bridge Welding Code* acceptance criteria. See Charpy V-notch testing requirements of the *Standard Specifications*. Identify tension welded butt splices for which radiographic examination (RT) is required. See *Standard Specifications* Section 6-03.3(25)A. V and X are also defined in the Structural Steel Notes. Permissible welded web splices should be shown, however, the optional welded web splice shall on the Girder Details sheet permits

the fabricator to add splices subject to approval by the engineer. If there are fracture critical components, they must be clearly identified along with CVN call-outs. See Bridge Standard Drawing 6.4-A2.

6.4.5 Typical Girder Details

One or two plan sheets should be devoted to showing typical details to be used throughout the girders. Such details include the weld details, various stiffener plates and weld connections, locations of optional web splices, and drip plate details. Include field splice details here if only one type of splice will suffice for the plans. An entire sheet may be required for bridges with multiple field splice designs. See Bridge Standard Drawings 6.4-A3 and 6.4-A4. Note: Do not distinguish between field bolts and shop bolts. A solid bolt symbol will suffice.

Field splices for flanges should accommodate web location tolerance of ± ¼″ per BWC 3.5.1.5. Allow a minimum of ¼″ for out of position web plus ⅜″ for fillet weld, or a total of ⅝″ minimum clear between theoretical face of web and edge of splice plate. The bottom flange splice plate should be split to allow moisture to drain (use 4 equal bottom flange splice plates). The fill plate does not need to be split.

Vertical stiffeners used to connect cross frames are generally 8″ wide to accommodate two bolt rows. They shall be welded to top and bottom flanges to reduce out-of-plane bending of the web. All stiffeners shall be coped, clipped (or cut short in the case of transverse stiffeners without cross frames) a distance between $4t_w$ and $6t_w$ to provide web flexibility, per AASHTO LRFD Article 6.10.11.1.1.

6.4.6 Cross Frame Details

Show member sizes, geometrics (work lines and work points), and connection details. Actual lengths of members and dimensions of connections will be determined by the shop plan detailer. Details shall incorporate actual conditions such as skew and neighboring members so that geometric conflicts can be avoided. Double angles shall not be used for cross frames. Cross frames shall be complete subassemblies for field installation. For highly loaded cross frames, such as at piers or between curved girders, consider symmetric sections with little or no eccentricity in the connections. Where possible, allow for repetitive use of cross frame geometrics, especially hole patterns in stiffener connections, regardless of superelevation transitions. See Bridge Standard Drawing 6.4-A5.

Internal cross frames and top lateral systems for box girders are shop welded, primarily. All connection types should be closely examined for detail conflict and weld access. Clearance between bridge deck forming and top lateral members must be considered.

6.4.7 Camber Diagram and Bearing Stiffener Rotation

Camber curves shall be detailed using conventional practices. Dimensions shall be given at tenth points. Dimensions may also be given at cross frame locations, which may be more useful in the field. In order to place bearing stiffeners in the vertical position after bridge deck placement, it is necessary to show expected girder rotations at piers. See Bridge Standard Drawing 6.4-A6.

Office practice is to show deflection camber only. Geometric camber for profile grade and superelevation will be calculated by the shop detailer from highway alignment shown on the Layout sheets.

A separate diagram and table, with bridge cross section, should be included to show how elevations at edges of deck can be determined just before concrete placement. This will give adjustments to add to profile grades, based on remaining dead load deflections, with deck formwork and reinforcing being present.

The camber diagram is intended to be used by the bridge fabricator. The screed setting adjustment diagram is intended to be used by the contractor and inspectors.

6.4.8 Bridge Deck

New bridge decks for steel I-girders or box girders shall use Deck Protection System 1.

The bridge deck slab is detailed in section and plan views. For continuous spans, add a section showing negative moment longitudinal reinforcing. If possible, continue the positive moment region reinforcing pattern from end-to-end of the bridge deck with the negative moment region reinforcing superimposed on it. The plan views should detail typical reinforcing and cutoff locations for negative moment steel. Avoid termination of all negative moment steel at one location. See Bridge Standard Drawings 6.4-A7 and 6.4-A8.

The "pad" dimension for steel girders is treated somewhat differently than for prestressed girders. The pad dimension is assumed to be constant throughout the span length. Ideally, the girder is cambered to compensate for dead loads and vertical curves. However, fabrication and erection tolerances result in considerable deviation from theoretical elevations. The pad dimension is therefore considered only a nominal value and is adjusted as needed along the span once the steel has been erected and profiled. The screed for the slab is to be set to produce correct roadway profile. The plans should reference this procedure contained in *Standard Specifications* Section 6-03.3(39). The pad dimension is to be noted as nominal. As a general rule of thumb, use 11″ for short span bridges (spans less than 150′), 12″ for short to medium span bridges (150′ to 180′), 13″ for medium spans (180′ to 220′) and 14″ to 15″ for long spans (over 220′). These figures are only approximate. Use good engineering judgment when detailing this dimension.

6.4.9 Handrail Details, Inspection Lighting, and Access

If required, include handrails with typical girder details. Locations may be adjusted to avoid conflicts with other details such as large gusset plates. Handrail use shall be coordinated with the Bridge Preservation Office. Often, handrails are not needed if access to all details is possible from under bridge inspection trucks (UBIT's). Also, easy public access to girder ends and handrails may represent a nuisance. Examine the bridge and site to determine the need for handrails. Fences may be required to deny public access.

Box girders require special consideration for inspection access. Access holes or hatches shall be detailed to exclude birds and the public. They shall be positioned where ladders, as a minimum, are required to gain access. If possible locate hatches in girder webs at abutments. Hatches through webs may reduce shear capacity but are easier to use. Webs can be thickened to compensate for section loss. Provide for round trip access and penetrations at all intermediate diaphragms. Openings through girder ends are preferred if space behind end walls permits. Bottom flange hatches are difficult to operate. Pier diaphragms will require openings for easy passage. Access for removing bridge deck formwork shall be planned for. Typically, block-outs in the deck large enough to remove full size plywood are detailed. Block-outs require careful rebar splicing or coupling for good long term performance. Box girders shall have electrical, inspection lighting, and ventilation details for the aid of inspection and maintenance. Refer to the *Design Manual* Chapter 1040 for bridge inspection lighting requirements. Coordinate with the Region Design Office to include lighting with the electrical plans.

To facilitate inspection, interior paint shall be Federal Standard 595 color number 17925 (white). One-way inspection of all interior spaces should be made possible by round trip in adjoining girders. This requires some form of walkway between boxes and hatch operation from both sides. If locks are needed, they must be keyed to one master. Air vents shall be placed along girder webs to allow fresh air to circulate. Refer to previous projects for details.

6.4.10 Box Girder Details

A few details unique to box girders will be presented here. Office practice has been to include a top lateral system in each box, full length of a girder. There is a possibility of reducing some bays of the top laterals in straight girders without sacrificing safety during construction. However, most WSDOT box girders are built to some level of curvature, and the practice of using a full length top lateral system should be adhered to unless a careful stability analysis is undertaken. In the past, the top lateral system was detailed with 6″ to 8″ clearance between lateral work line and bottom of top flange. The intent was to provide adequate clearance for removable deck forming. This requires the introduction of gusset connecting plates with potentially poor fatigue behavior if welded to the web.

A cleaner method of attaching the top laterals is by bolting directly to the top flange or intermediate bolted gusset plate (in which case, the lateral members may be welded to the gusset plate). The flange bolting pattern shall be detailed to minimize loss of critical material, especially at interior supports. In order to maximize the clearance for bridge deck forms, all lateral connections should progress down from the bottom surface of the top flange. The haunch distance between top of web and deck soffit shall

be 6″ or greater to allow deck forming to clear top lateral members. Supplemental blocking will be required to support deck forms on the typical waler system. See example top lateral details Bridge Standard Drawings 6.4-A11.

Ideal girder construction allows full length web and flange plates to be continuously welded without interruption of the welder. This process is routinely accomplished with I-girder shapes, where web stiffeners are attached after top and bottom flanges are welded to the web. With box girders, however, due to handling constraints, most fabrication shops need to progress from top flange-to-web welding, welding stiffeners to webs, and then welding the top flange plus web assemblies to the bottom flange. This introduces a start and stop position at each web stiffener, unless enough clearance is provided for the welder. To achieve this, the stiffener should be held back and attached to the bottom flange by a member brought in after the bottom longitudinal welds are complete. See detail Bridge Standard Drawings 6.4-A11.

Small tractor mounted welders are able to run a continuous pass on the bottom external weld, provided there is adequate shelf width. The standard offset between center of web and edge of bottom flange is now 2″. In the past, this weld was primarily performed by hand.

The most significant design difference between I-girders and box girders occur in bottom flange compression regions. Using thicker material to provide stability is not usually economical, given the typically wide unsupported flange widths. The standard practice has been to stiffen relatively thin compression plates with a system of longitudinal and transverse stiffeners. WSDOT practice is to use tee shapes, either singly or in pairs for the wider plates. Ideally, the stiffeners are terminated at bolted field splices. If the stiffener is terminated in a region of live load tension cycles, careful attention needs to be paid to design fatigue stresses and the termination detail. See details Bridge Standard Drawings 6.4-A13.

Box girder inside clear height shall be 5 feet or more to provide reasonable inspection access. Less than 5 feet inside clear height is not be permitted. Other girder types and materials shall be investigated.

Drain holes shall be installed at all low points.

Geometrics for boxes are referenced to a single workline, unless box width tapers. The box cross section remains tied to a centerline intersecting this workline and normal to the bridge deck. The section rotates with superelevation transition rather than warping. See box girder geometrics and proportions Bridge Standard Drawings 6.4-A10.

Box girders shall be supported by single centralized bearings when two or more boxes make up the bridge section. This requires diaphragms between boxes for bracing. See pier diaphragm details Bridge Standard Drawings 6.4-A12.

6.5 Shop Plan Review

Shop plans shall be checked for agreement with the Contract Plans, *Standard Specifications*, and the Special Provisions. The review procedure is described in Section 1.3.5. Material specifications shall be checked along with plate sizes.

Welding procedure specifications (WPS) and procedure qualification records (PQR) should be submitted with shop plans. If not, they should be requested so they can be reviewed during the shop plan review process.

Most shop plans may be stamped:

> "GEOMETRY NOT REVIEWED BY THE BRIDGE AND STRUCTURES OFFICE"

However, the reviewer should verify that lengths, radii, and sizes shown on shop plans are in general agreement with the contract. The effects of profile grade and camber would make exact verification difficult. Some differences in lengths, between top and bottom flange plates for example, are to be expected.

The procedures to follow in the event changes are required or requested by the fabricator can be found in Section 1.3.6. In the past, shop plans with acceptable changes have been so noted and stamped:

> "STRUCTURALLY ACCEPTABLE, BUT DOES NOT CONFORM TO THE CONTRACT REQUIREMENTS"

6.6 Bridge Standard Drawings

Structural Steel

6.4-A1	Example Framing Plan
6.4-A2	Example Girder Elevation
6.4-A3	Example Girder Details
6.4-A4	Steel Plate Girder Example–Field Splice
6.4-A5	Example–Crossframe Details
6.4-A6	Example–Camber Diagram
6.4-A7	Steel Plate Girder Example–Roadway Section
6.4-A8	Steel Plate Girder Example–Slab Plan
6.4-A9	Example – HANDRAIL
6.4-A10	Example–Box Girder Geometrics and Proportions
6.4-A11	Example–Box Girder Details
6.4-A12	Example–Box Girder Pier Diaphragm Details
6.4-A13	Example–Box Girder Miscellaneous Details
6.4-A14	Example–Access Hatch Details
6.4-A15	NGI-ESW CVN Impact Test for Heat Affected Zone

6.99 References

The following publications can provide general guidance for the design of steel structures. Some of this material may be dated and its application should be used with caution.

1. FHWA *Steel Bridge Design Handbook* (November, 2012)

   This includes 19 volumes of detailed design references for I-girders and box girders, both straight and curved, utilizing LRFD design. This reference also has 6 detailed design examples for I-girder and box girder bridges, straight and curved.

2. *Composite Steel Plate Girder Superstructures,* by US Steel

   Example tables and charts for complete plate girders, standardized for 34 and 44 ft roadways and HS-20 loading. Many span arrangements and lengths are presented.

3. *Steel Structures, Design and Behavior* by Salmon and Johnson

   A textbook for steel design, formatted to AISC LRFD method. This is a good reference for structural behavior of steel members or components, in detail that is not practical for codes or other manuals.

4. *Design of Welded Structures* by Omer H. Blodgett.

   This publication is quite helpful in the calculation of section properties and the design of individual members. There are sections on bridge girders and many other welded structures. The basics of torsion analysis are included.

5. *Guide to Stability Design Criteria for Metal Structures, Sixth Edition* by Ronald D. Ziemian

6. AASHTO/NSBA Steel Bridge Collaboration Publications

   These publications include several guidelines for design, detailing, fabrication, inspection and erection of steel structures.

7. *A Fatigue Primer for Structural Engineers*, by John Fisher, Geoffrey L Kulak, and Ian F. C. Smith

8. *Steel Construction Manual,* Latest Edition*,* by American Institute of Steel Construction

   The essential reference for rolled shape properties, design tables, and specifications governing steel design and construction.

9. *Machinery's Handbook,* Latest Edition by Industrial Press

   A reference book for the machine shop practice; handy for thread types, machine tolerances and fits, spring design, etc.

10. *Painting of Steel Bridges and Other Structures*, by Clive H. Hare

    This is a good reference for paint systems, surface preparation, and relative costs, for both bare and previously painted steel. Explanations of how each paint system works, and comparisons of each on the basis of performance and cost are provided.

11. NCHRP Report 314, *Guidelines for the Use of Weathering Steel in Bridges*

    This reference contains detailing information if weathering steel will be used. Protection of concrete surfaces from staining and techniques for providing uniform appearance is provided.

Chapter 7 Substructure Design Contents

7.1 General Substructure Considerations 7-1
7.1.1 Foundation Design Process 7-1
7.1.2 Foundation Design Limit States 7-3
7.1.3 Seismic Design. 7-3
7.1.4 Substructure and Foundation Loads 7-3
7.1.5 Concrete Class for Substructure 7-5
7.1.6 Foundation Seals 7-6

7.2 Foundation Modeling for Seismic Loads 7-9
7.2.1 General 7-9
7.2.2 Substructure Elastic Dynamic Analysis Procedure 7-9
7.2.3 Bridge Model Section Properties 7-10
7.2.4 Bridge Model Verification 7-11
7.2.5 Deep Foundation Modeling Methods 7-12
7.2.6 Lateral Analysis of Piles and Shafts 7-16
7.2.7 Spread Footing Modeling 7-21

7.3 Column Design 7-24
7.3.1 General Design Considerations 7-24
7.3.2 Slenderness Effects 7-25
7.3.3 Shear Design 7-27
7.3.4 Column Silos 7-27
7.3.5 Column Reinforcement 7-30
7.3.6 Column Hinges 7-42
7.3.7 Reduced Column Section 7-44

7.4 Crossbeams 7-48
7.4.1 General Design 7-48

7.5 Abutment Design and Details 7-52
7.5.1 General 7-52
7.5.2 Embankment at Abutments 7-55
7.5.3 Abutment Loading 7-55
7.5.4 Temporary Construction Load Cases 7-58
7.5.5 Abutment Bearings and Girder Stops 7-58
7.5.6 Abutment Expansion Joints 7-60
7.5.7 Open Joint Details 7-60
7.5.8 Construction Joints 7-61
7.5.9 Abutment Wall Design 7-61
7.5.10 Drainage and Backfilling 7-64
7.5.11 Abutments Supported By Mechanically-Stabilized Earth Walls 7-66

7.6 Abutment Wing Walls and Curtain Walls 7-70
7.6.1 Traffic Barrier Loads 7-70
7.6.2 Wing Wall Design. 7-70
7.6.3 Wing Wall Detailing 7-70

7.7 Footing Design 7-71
7.7.1 General Footing Criteria 7-71
7.7.2 Loads and Load Factors 7-72
7.7.3 Geotechnical Report Summary 7-73
7.7.4 Spread Footing Design 7-74
7.7.5 Pile-Supported Footing Design 7-80

7.8 Shafts 7-82
7.8.1 Axial Resistance 7-82
7.8.2 Structural Design and Detailing 7-86

7.9 Piles and Piling 7-95
7.9.1 Pile Types 7-95
7.9.2 Single Pile Axial Resistance 7-96
7.9.3 Block Failure 7-97
7.9.4 Pile Uplift 7-97
7.9.5 Pile Spacing 7-97
7.9.6 Structural Design and Detailing of CIP Concrete Piles 7-97
7.9.7 Pile Splices 7-99
7.9.8 Pile Lateral Design 7-99
7.9.9 Battered Piles 7-99
7.9.10 Pile Tip Elevations and Quantities 7-99
7.9.11 Plan Pile Resistance 7-100

7.10 Concrete-Filled Steel Tubes 7-101
7.10.1 Scope 7-101
7.10.2 Design Requirements 7-102
7.10.3 CF**S**T-to-Cap Annular Ring Connections 7-107
7.10.4 CFST-to-Cap Reinforced Concrete Connections 7-112
7.10.5 RCFST-to-Column and CFST-to Column Connections 7-114
7.10.6 Partially-filled CF***S***T 7-115
7.10.7 Construction Requirements 7-116
7.10.8 Notation 7-117

7.11 Bridge Standard Drawings 7-119

7.12 Appendices 7-120
Appendix 7.3-A2 Noncontact Lap Splice Length Column to Shaft Connections 7-121
Appendix 7-B1 Linear Spring Calculation Method II (Technique I) 7-123
Appendix 7-B2 Pile Footing Matrix Example Method II (Technique I) 7-128
Appendix 7-B3 Non-Linear Springs Method III 7-131

7.99 References 7-133

7.1 General Substructure Considerations

Note that in the following guidelines where reference is made to AASHTO LRFD the item can be found in the current AASHTO *LRFD Bridge Design Specifications* (LRFD). And for any reference to AASHTO Seismic, the item can be found in the current AASHTO *Guide Specifications for LRFD Seismic Bridge Design* (SEISMIC).

7.1.1 Foundation Design Process

A flowchart is provided in which illustrates the overall design process utilized by the WSDOT Bridge and Structures Office to accomplish an LRFD foundation design. Note this process is also outlined in the *Geotechnical Design Manual* Section 8.2. The Bridge and Structures Office (BSO), the Geotechnical Branch (GB) and the Hydraulics Branch (HB) have been abbreviated. The steps in the flowchart are defined as follows:

A. Scoping Level Design

This phase of the design process involves the region requesting initial bridge options and costs for a future project. Depending on the complexity of the project, this phase could include a Type, Size and Location (TS&L) Report.

This design step may result in informal communication between the BSO and the GB and/or HB with the request for preliminary information and recommendations. The level of communication will depend on the available information provided by the region and the complexity of the project. The type of information that may be received from the GB and HB are as follows:

- Anticipated soil site conditions.
- Maximum embankment slopes.
- Possible foundation types and geotechnical hazards such as liquefaction.
- Scour potential for piers if a water crossing.
- Potential for future migration of a stream or river crossing.

In general, these recommendations rely on existing site data. Site borings may not be available and test holes are drilled later. The GB provides enough information to select potential foundation types for an initial scoping level or TS&L level plan and estimate.

B. Develop Site Data and Preliminary Bridge Plan

In the second phase, the BSO obtains site data from the region, see Section 2.2, and develops the preliminary bridge plan. The preliminary pier locations determine soil boring locations at this time. The GB and/or the HB may require the following information to continue their preliminary design.

- Structure type and magnitude of settlement the structure can tolerate (both total and differential).
- At abutments – Approximate maximum top of foundation elevation.

- At interior piers – The initial size, shape and number of columns and how they are configured with the foundation (e.g., whether a single foundation element supports each column, or one foundation element supports multiple columns)
- At water crossings – Pier scour depth, if known, and any potential for migration of the water crossing in the future. Typically, the GB and the BSO should coordinate pursuing this information with the HB.
- Any known structural constraints that affect the foundation type, size, or location.
- Any known constraints that affect the soil resistance (utilities, construction staging, excavation, shoring, and falsework).

C. Preliminary Foundation Design

The third phase is a request by the BSO for a preliminary foundation memorandum. The GB memo will provide preliminary soil data required for structural analysis and modeling. This includes any subsurface conditions and the preliminary subsurface profile.

The concurrent geotechnical work at this stage includes:

- Completion of detailed boring logs and laboratory test data.
- Development of foundation type, soil capacity, and foundation depth.
- Development of static/seismic soil properties and ground acceleration.
- Recommendations for constructability issues.

The BO may also request the HB to provide preliminary scour design recommendations if the structure is located over a water crossing.

D. Structural Analysis and Modeling

In the fourth phase, the BSO performs a structural analysis of the superstructure and substructure using a bridge model and preliminary soil parameters. Through this modeling, the designer determines loads and sizes for the foundation based on the controlling LRFD limit states. Structural and geotechnical design continues to investigate constructability and construction staging issues during this phase.

In order to produce a final geotechnical report, the BSO provides the following structural feedback to the Geotechnical Engineer:

- Foundation loads for service, strength, and extreme limit states.
- Foundation size/diameter and depth required to meet structural design.
- Foundation details that could affect the geotechnical design of the foundations.
- Foundation layout plan.
- Assumed scour depths for each limit state (if applicable)

For water crossings, the BSO also provides the information listed above to the hydraulics engineer to verify initial scour and hydraulics recommendations are still suitable for the site.

(See Chapter 2 for examples of pile design data sheets that shall be filled out and submitted to the Geotechnical Engineer at the early stage of design.)

E. Final Foundation Design

The last phase completes the geotechnical report and allows the final structural design to begin. The preliminary geotechnical assumptions are checked and recommendations are modified, if necessary. The final report is complete to a PS&E format since the project contract will contain referenced information in the geotechnical report, such as:

- All geotechnical data obtained at the site (boring logs, subsurface profiles, and laboratory test data).
- All final foundation recommendations.
- Final constructability and staging recommendations.

The designer reviews the final report for new information and confirms the preliminary assumptions. With the foundation design complete, the final bridge structural design and detailing process continues to prepare the bridge plans. Following final structural design, the structural designer shall follow up with the geotechnical designer to ensure that the design is within the limits of the geotechnical report.

7.1.2 Foundation Design Limit States

The controlling limit states for WSDOT projects for substructure design are described as follows:

Strength I	Relating to the normal vehicular use
Strength III	Relating to the bridge exposed to wind
Strength V	Relating to the normal vehicular use and wind
Extreme-Event I	Relating to earthquake
Service I	Relating to normal operational use and wind

7.1.3 Seismic Design

The seismic design of all substructures shall be in accordance with the AASHTO Seismic - except as noted otherwise.

7.1.4 Substructure and Foundation Loads

Figure 7.1.4-1 below provides a common basis of understanding for load location and orientations for substructure design. This figure also shows elevations required for abutment and substructure design. Note that for shaft and some pile foundation designs, the shaft or pile may form the column as well as the foundation element.

Spread footings usually have a design orientation normal to the footing. Since bridge loads are longitudinal and transverse, skewed superstructure loads are converted (using vector components) to normal and parallel footing loads. Deep foundation analysis usually has a normal/parallel orientation to the pier in order to simplify group effects.

Substructure elements are to carry all of the loads specified in AASHTO Seismic and AASHTO LRFD. Selecting the controlling load conditions requires good judgment to minimize design time. All anticipated dead load (*DC*) conditions shall be accounted for during a substructure design. Sidesway effect shall be included where it tends to increase stresses. For live loads (*LL*), the dynamic allowance (*IM*) shall be applied in accordance with AASHTO LRFD Section 3.6.2 and is not included in the design of buried elements of the substructure. Portions of the abutments in contact with the soil are considered buried elements.

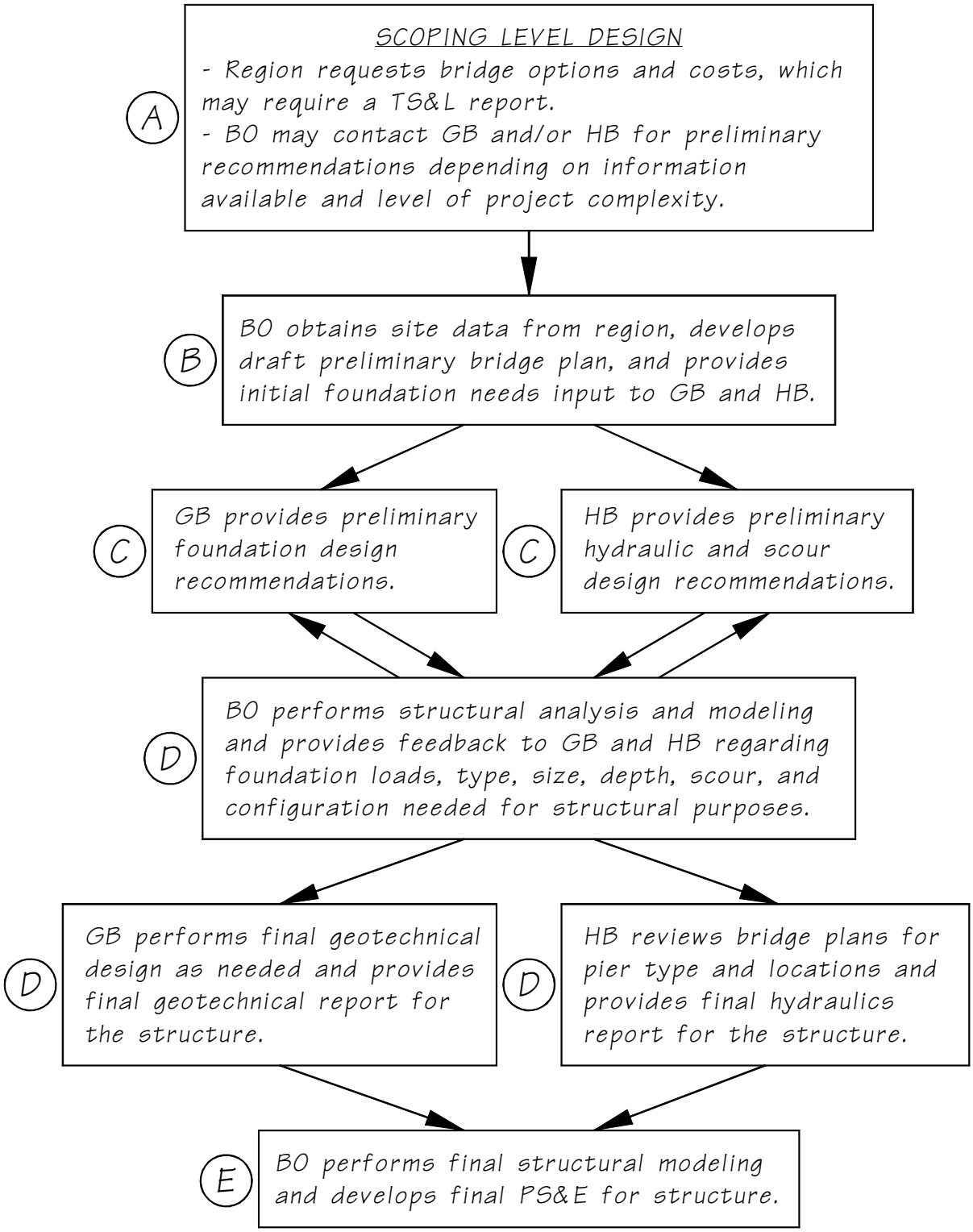

BO - Bridge and Structures Office
GB - Geotechnical Branch
HB - Hydraulics Branch

Overall Design Process for LRFD Foundation Design
Figure 7.1.1-1

Bridge design shall consider construction loads to ensure structural stability and prevent members from overstress. For example, temporary construction loads caused by placing all of the precast girders on one side of a crossbeam can overload a single column pier. Construction loads shall also include live loads from potential construction equipment. The plans shall show a construction sequence and/or notes to avoid unacceptable loadings.

On curved bridges, the substructure design shall consider the eccentricity resulting from the difference in girder lengths and the effects of torsion. When superstructure design uses a curved girder theory, such as the V-Load Method, the reactions from such analysis must be included in the loads applied to the substructure.

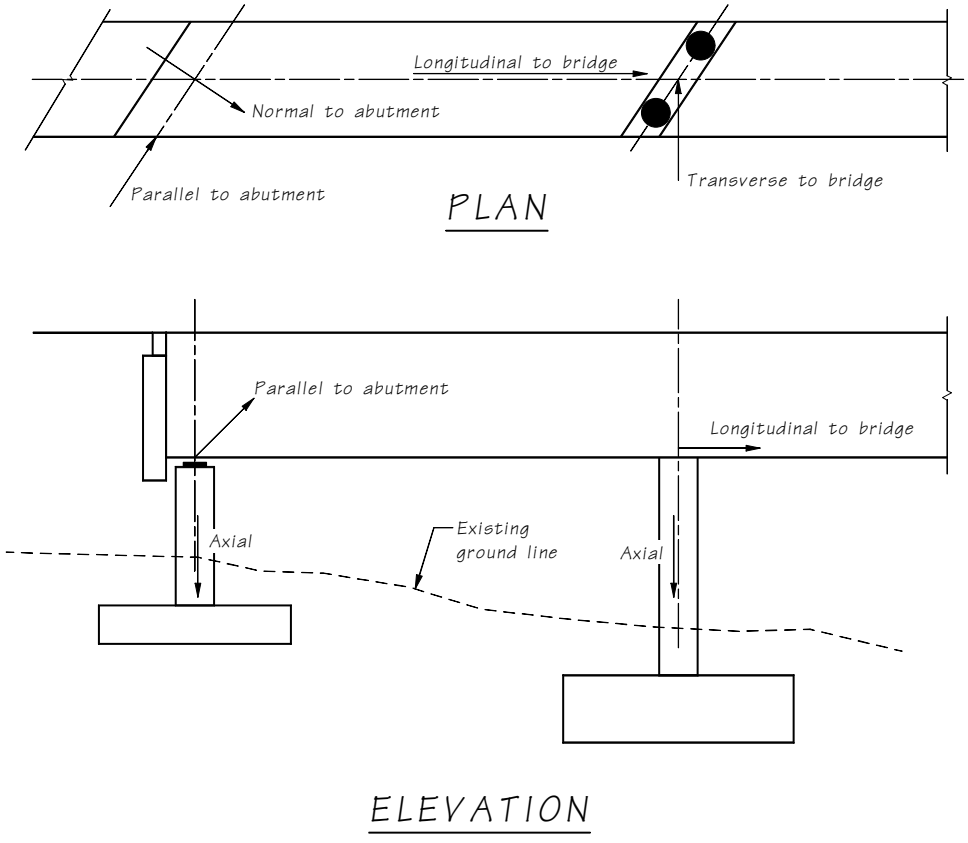

Substructure Directional Forces
Figure 7.1.4-1

7.1.5 Concrete Class for Substructure

The concrete class for all substructure elements shall be Class 4000. This includes footings, pedestals, massive piers, columns, crossbeams, traffic barriers, and retaining walls, wing walls, and curtain walls connected to the bridge substructure or superstructure. Foundation seals shall be Class 4000W. Shafts and cast-in-place piles shall be Class 5000P. Concrete Class 4000P may be used for elements other than bridge foundations.

7.1.6 Foundation Seals

A concrete seal within the confines of a cofferdam permits construction of a pier footing and column in the dry. This type of underwater construction is practical to a water depth of approximately 50 feet.

Seal concrete is placed underwater with the use of a tremie. A tremie is a long pipe that extends to the bottom of the excavation and permits a head to be maintained on the concrete during placement. After the concrete has been placed and has obtained sufficient strength, the water within the cofferdam is removed. In Figure 7.1.6-1, some of the factors that must be considered in designing a seal are illustrated.

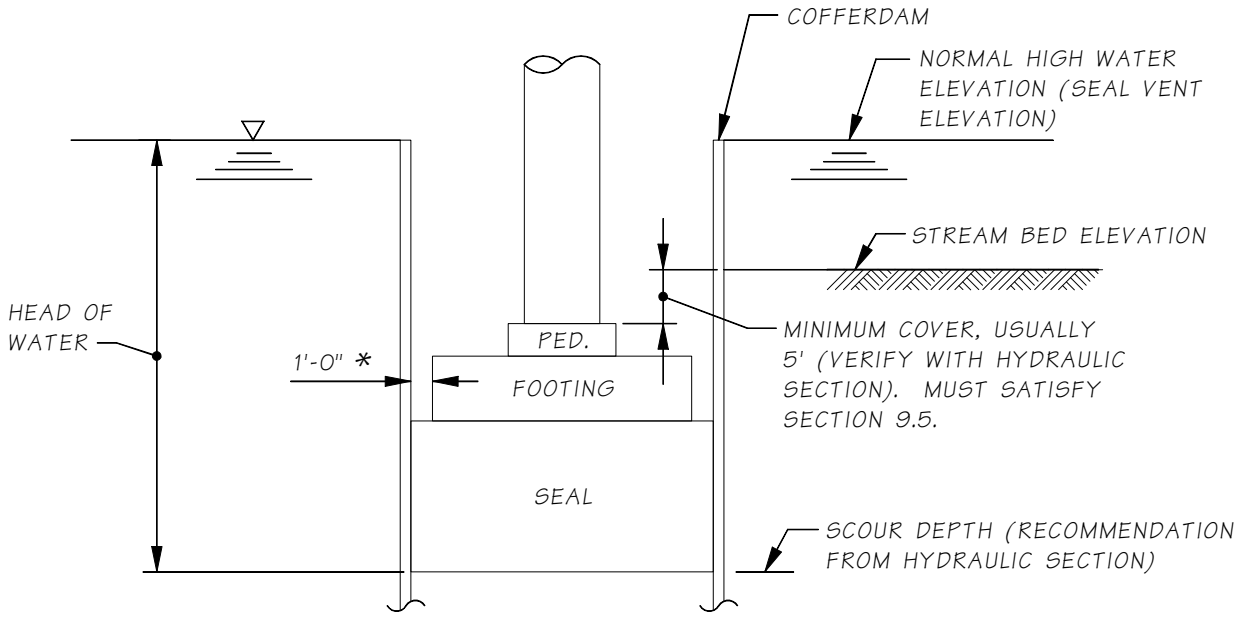

Figure 7.1.6-1

A. General Seal Criteria

The normal high water elevation is defined as the highest water surface elevation that may normally be expected to occur during a given time period. This elevation, on the hydraulics data sheet, is obtained from discussions with local residents or by observance of high water marks at the site. The normal high water is not related to any flood condition.

1. Seal Vent Elevation

The Hydraulics Branch recommends a seal vent elevation in accordance with the following criteria.

i. Construction Time Period Not Known

If the time period of the footing construction is not known, the vent elevation reflects the normal high water elevation that might occur at any time during the year.

ii. **Construction Time Period Known**

If the time period of the footing construction can be anticipated, the vent elevation reflects the normal high water elevation that might occur during this time period. (If the anticipated time period of construction is later changed, the Hydraulics Branch shall be notified and appropriate changes made in the design.)

2. Scour Depth

The Hydraulics Branch determines the depth of the anticipated scour. The bottom of footing, or bottom of seal if used, shall be no higher than the scour depth elevation. After preliminary footing and seal thicknesses have been determined, the bridge designer shall review the anticipated scour elevation with the Hydraulics Branch to ensure that excessive depths are not used.

3. Foundation Elevation Recommended in Geotechnical Report

Based on the results obtained from test borings at the site, the Geotechnical Engineer determines a foundation elevation, bearing capacity and settlement criteria. If other factors control, such as scour or footing cover, the final footing elevation shall be adjusted as required.

4. Unusual Conditions

Unusual site conditions such as rock formations or deep foundations require special considerations in order to obtain the most optimum design. The proposed foundation design/construction shall be discussed with both the Geotechnical Branch and the Hydraulics Branch prior to final plan preparation.

B. Spread Footing Seals

The Geotechnical Branch will generally recommend whether a foundation seal may or may not be required for construction. Bearing loads are the column moments applied at the base of the footing and vertical load applied at the bottom of the seal. The seal is sized for the soil bearing capacity. Overturning stability need only be checked at the base of the pier footing.

1. When a Seal is Required During Construction

If the footing can be raised without violating cover requirements, the bottom of the seal elevation shall be the lower of the scour elevation or the foundation elevation as recommended by the Geotechnical Engineer. The bottom of the seal may be lower than the scour elevation or foundation elevation due to cover requirements. Spread footing final design shall include the dead load weight of the seal.

2. When a Seal May Not Be Required for Construction

Both methods of construction are detailed in the plans when it is not clear if a seal is required for construction. The plans must detail a footing with a seal and an alternate without a seal. The plan quantities are based on the footing designed with a seal. If the alternate footing elevation is different from the footing with seal, it is also necessary to note on the plans the required changes in rebar such as length of column bars, increased number of ties, etc. Note that this requires the use of either General Special Provision (GSP) 6-02.3(6) B.OPT1.GB6 or 6-02.3(6)B.OPT2.GB6.

C. Pile Footing Seals

The top of footing, or pedestal, is set by the footing cover requirements. The bottom of seal elevation is based on the stream scour elevation determined by the Hydraulics Branch. A preliminary analysis is made using the estimated footing and seal weight, and the column moments and vertical load at the base of the footing to determine the number of piles and spacing. The seal size shall be 1′-0″ larger than the footing all around. If the seal is omitted during construction, the bottom of footing shall be set at the scour elevation and an alternate design is made.

In general seal design requires determining a thickness such that the seal weight plus any additional resistance provided by the bond stress between the seal concrete and any piling is greater than the buoyant force (determined by the head of water above the seal). If the bond stress between the seal concrete and the piling is used to determine the seal thickness, the uplift capacity of the piles must be checked against the loads applied to them as a result of the bond stress. The bond between seal concrete and piles is typically assumed to be 10 psi. The minimum seal thickness is 1′-6″.

7.2 Foundation Modeling for Seismic Loads

7.2.1 General

Bridge modeling for seismic events shall be in accordance with requirements of the AASHTO Seismic Section 5, "Analytical Models and Procedures." The following guidance is for elastic dynamic analysis. Refer to AASHTO Seismic Section 5.4 for other dynamic analysis procedures.

7.2.2 Substructure Elastic Dynamic Analysis Procedure

The following is a general description of the iterative process used in an elastic dynamic analysis. ***Note:*** An elastic dynamic analysis is needed to determine the displacement demand, Δ_D. The substructure elements are first designed using Strength, Service or Extreme II limit state load cases prior to performing the dynamic analysis.

1. Build a Finite Element Model (FEM) to determine initial structure response (*EQ+DC*). Assume that foundation springs are located at the bottom of the column.

   A good initial assumption for fixity conditions of deep foundations (shafts or piles) is to add 10′ to the column length in stiff soils and 15′ to the column in soft soils.

   Use multi-mode response spectrum analysis to generate initial displacements.

2. Determine foundation springs using results from the seismic analysis in the longitudinal and transverse directions. ***Note:*** The load combinations specified in AASHTO Seismic Section 4.4 shall NOT be used in this analysis.

3. For spread footing foundations, the FEM will include foundation springs calculated based on the footing size as calculated in Section 7.2.7. No iteration is required unless the footing size changes. ***Note:*** For Site Classes A and B the AASHTO Seismic allows spread footings to be modeled as rigid or fixed.

4. For deep foundation analysis, the FEM and the soil response program must agree or converge on soil/structure lateral response. In other words, the moment, shear, deflection, and rotation of the two programs should be within 10 percent. More iteration will provide convergence much less than 1 percent. The iteration process to converge is as follows:

   a. Apply the initial FEM loads (moment and shear) to a p-y type soil response program such as LPILE (including LPILE, LPILE-SHAFT and LPILE-GROUP).

   b. Calculate foundation spring values for the FEM. ***Note:*** The load combinations specified in AASHTO Seismic Section 4.4 shall not be used to determine foundation springs.

   c. Re-run the seismic analysis using the foundation springs calculated from the soil response program. The structural response will change. Check to insure the FEM results (M, V, Δ, θ, and spring values) in the transverse and longitudinal direction are within 10 percent of the previous run. This check verifies the linear spring, or soil response (calculated by the FEM) is close to the predicted nonlinear soil behavior (calculated by the soil response program). If the results of the FEM and the soil response program differ by more than 10 percent, recalculate springs and repeat steps (a) thru (c) until the two programs converge to within 10 percent.

Special note for single column/single shaft configuration: The seismic design philosophy requires a plastic hinge in the substructure elements above ground (preferably in the columns). Designers should note the magnitude of shear and moment at the top of the shaft, if the column "zero" moment is close to a shaft head foundation spring, the FEM and soil response program will not converge and plastic hinging might be below grade.

Throughout the iteration process it is important to note that any set of springs developed are only applicable to the loading that was used to develop them (due to the inelastic behavior of the soil in the foundation program). This can be a problem when the forces used to develop the springs are from a seismic analysis that combines modal forces using a method such as the Complete Quadratic Combination (CQC) or other method. The forces that result from this combination are typically dominated by a single mode (in each direction as shown by mass participation). This results in the development of springs and forces that are relatively accurate for that structure. If the force combination (CQC or otherwise) is not dominated by one mode shape (in the same direction), the springs and forces that are developed during the above iteration process may not be accurate.

LPILE may be used for a pile group supported footing. Pile or shaft foundation group effects for lateral loading shall be taken as recommended in the project geotechnical report. The liquefaction option in LPILE shall not be used (the liquefaction option shall be disabled). The "Liquefied Sand" soil type shall not be used in LPILE.

7.2.3 Bridge Model Section Properties

In general, gross section properties may be assumed for all FEM members, except concrete columns.

A. Cracked Properties for Columns

Effective section properties shall be in accordance with the AASHTO Seismic Section 5.6.

B. Shaft Properties

The shaft concrete strength and construction methods lead to significant variation in shaft stiffness described as follows.

For a stiff substructure response:

1. Use f'_c to calculate the modulus of elasticity.
2. Use I_g based on the maximum oversized shaft diameter allowed by *Standard Specifications* Section 6-19.
3. When permanent casing is specified, increase shaft I_g using the transformed area of a ¾″ thick casing. Since the contractor will determine the thickness of the casing, ¾″ is a conservative estimate for design.

For a soft substructure response:

1. Use f'_c to calculate the modulus of elasticity.
2. Use I_g based on the nominal shaft diameter. Alternatively, I_e may be used when it is reflective of the actual load effects in the shaft.

3. When permanent casing is specified, increase I using the transformed area of a ⅜″ thick casing.

   Since the contractor will determine the thickness of the casing, ⅜″ is a minimum estimated thickness for design.

C. Cast-in-Place Pile Properties

For a stiff substructure response:

1. Use 1.5 f'_c to calculate the modulus of elasticity. Since aged concrete will generally reach a compressive strength of at least 6 ksi when using a design strength of 4 ksi, the factor of 1.5 is a reasonable estimate for an increase in stiffness.
2. Use the pile I_g plus the transformed casing moment of inertia.

$$I_{pile} = I_g + (n)(I_{shell}) + (n-1)\left(I_{reinf}\right) \quad (7.2.3\text{-}1)$$

Where:

n = E_s/E_c

Use a steel casing thickness of ¼″ for piles less than 14″ in diameter, ⅜″ for piles 14″ to 18″ in diameter, and ½″ for larger piles.
Note: These casing thicknesses are to be used for analysis only, the contractor is responsible for selecting the casing thickness required to drive the piles.

For a soft substructure response:

1. Use 1.0 f'_c to calculate the modulus of elasticity.
2. Use pile I_g, neglecting casing properties.

7.2.4 Bridge Model Verification

As with any FEM, the designer should review the foundation behavior to ensure the foundation springs correctly imitate the known boundary conditions and soil properties. Watch out for mismatch of units.

All finite element models must have dead load static reactions verified and boundary conditions checked for errors. The static dead loads must be compared with hand calculations or another program's results. For example, span member end moment at the supports can be released at the piers to determine simple span reactions. Then hand calculated simple span *dead load* or PGsuper *dead load* and *live load* is used to verify the model.

Crossbeam behavior must be checked to ensure the superstructure *dead load* is correctly distributing to substructure elements. A 3D bridge line model concentrates the superstructure mass and stresses to a point in the crossbeam. Generally, interior columns will have a much higher loading than the exterior columns. To improve the model, crossbeam I_g should be increased to provide the statically correct column *dead load* reactions. This may require increasing I_g by about 1000 times. Many times this is not visible graphically and should be verified by checking numerical output. Note that most finite element programs have the capability of assigning constraints to the crossbeam and superstructure to eliminate the need for increasing the I_g of the crossbeam.

Seismic analysis may also be verified by hand calculations. Hand calculated fundamental mode shape reactions will be approximate; but will ensure design forces are of the same magnitude.

Designers should note that additional mass might have to be added to the bridge FEM for seismic analysis. For example, traffic barrier mass and crossbeam mass beyond the last column at piers may contribute significant weight to a two-lane or ramp structure.

7.2.5 Deep Foundation Modeling Methods

A designer must assume a foundation support condition that best represents the foundation behavior. Deep foundation elements attempt to imitate the non-linear lateral behavior of several soil layers interacting with the deep foundation. The bridge FEM then uses the stiffness of the element to predict the seismic structural response. Models using linear elements that are not based on non-linear soil-structure interaction are generally considered inaccurate for soil response/element stress and are not acceptable. There are three methods used to model deep foundations (FHWA Report No. 1P-87-6). Of these three methods the Bridge and Structures Office prefers Method II for the majority of bridges.

A. Method I – Equivalent Cantilever Column

This method assumes a point of fixity some depth below the bottom of the column to model the stiffness of the foundation element. This shall only be used for a preliminary model of the substructure response in SDC C and D.

B. Method II – Equivalent Base Springs

This method models deep foundations by using a {6x6} matrix. There are two techniques used to generate the stiffness coefficients for the foundation matrix. The equivalent stiffness coefficients assessed are valid only at the given level of loading. Any changes of the shaft-head loads or conditions will require a new run for the program to determine the new values of the equivalent stiffness coefficients. These equivalent stiffness coefficients account for the nonlinear response of shaft materials and soil resistance.

Technique I – The matrix is generated, using superposition, to reproduce the non-linear behavior of the soil and foundation at the maximum loading. With Technique I, 10 terms are produced, 4 of these terms are "cross couples." Soil response programs analyze the non-linear soil response. The results are then used to determine the equivalent base springs. See Appendix 7-B1 for more information.

Technique II – The equivalent stiffness matrix generated using this technique uses only the diagonal elements (no cross coupling stiffnesses). This technique is recommended to construct the foundation stiffness matrix (equivalent base springs).

In Technique II the "cross couple" effects are internally accounted for as each stiffness element and displacement is a function of the given Lateral load (P) and Moment (M). Technique II uses the total response ($\Delta_{t(P,M)}$ $\theta_{t(P,M)}$) to determine displacement and equivalent soil stiffness, maintaining a nonlinear analysis. Technique I requires superposition by adding the individual responses due to the lateral load and moment to determine displacement and soil stiffness. Using superposition to combine two nonlinear responses results in errors in displacement

and stiffness for the total response as seen in the Figure 7.2.5-1. As illustrated, the total response due to lateral load (*P*) and moment (*M*) does not necessarily equal the sum of the individual responses.

C. Method III – Non-Linear Soil Springs

This method attaches non-linear springs along the length of deep foundation members in a FEM model. See Appendix 7-B2 for more information. This method has the advantage of solving the superstructure and substructure seismic response simultaneously. The soil springs must be nonlinear PY curves and represent the soil/structure interaction. This cannot be done during response spectrum analysis with some FEM programs.

D. Spring Location (Method II)

The preferred location for a foundation spring is at the bottom of the column. This includes the column mass in the seismic analysis. For design, the column forces are provided by the FEM and the soil response program provides the foundation forces. Springs may be located at the top of the column. However, the seismic analysis will not include the mass of the columns. The advantage of this location is the soil/structure analysis includes both the column and foundation design forces.

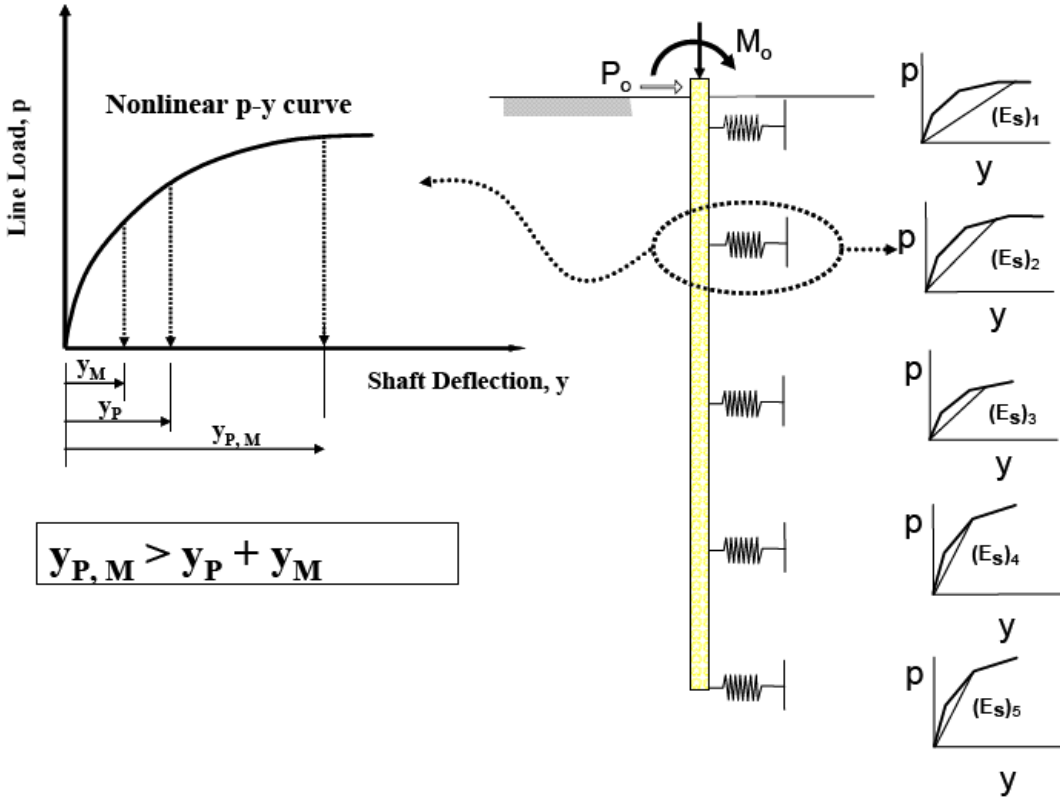

Limitations on the Technique I (Superposition Technique)
Figure 7.2.5-1

Designers should be careful to match the geometry of the FEM and soil response program. If the location of the foundation springs (or node) in the FEM does not match the location input to the soil response program, the two programs will not converge correctly.

E. Boundary Conditions (Method II)

To calculate spring coefficients, the designer must first identify the predicted shape, or direction of loading, of the foundation member where the spring is located in the bridge model. This will determine if one or a combination of two boundary conditions apply for the transverse and longitudinal directions of a support.

A fixed head boundary condition occurs when the foundation element is in double curvature where translation without rotation is the dominant behavior. Stated in other terms, the shear causes deflection in the opposite direction of applied moment. This is a common assumption applied to both directions of a rectangular pile group in a pile supported footing.

A free head boundary condition is when the foundation element is in single curvature where translation and rotation is the dominant behavior. Stated in other terms, the shear causes deflection in the same direction as the applied moment. Most large diameter shaft designs will have a single curvature below ground line and require a free head assumption. The classic example of single curvature is a single column on a single shaft. In the transverse direction, this will act like a flagpole in the wind, or free head. What is not so obvious is the same shaft will also have single curvature in the longitudinal direction (below the ground line), even though the column exhibits some double curvature behavior. Likewise, in the transverse direction of multi-column piers, the columns will have double curvature (frame action). The shafts will generally have single curvature below grade and the free head boundary condition applies. The boundary condition for large shafts with springs placed at the ground line will be free head in most cases.

The key to determine the correct boundary condition is to resolve the correct sign of the moment and shear at the top of the shaft (or point of interest for the spring location). Since multi-mode results are always positive (CQC), this can be worked out by observing the seismic moment and shear diagrams for the structure. If the sign convention is still unclear, apply a unit load in a separate static FEM run to establish sign convention at the point of interest.

The correct boundary condition is critical to the seismic response analysis. For any type of soil and a given foundation loading, a fixed boundary condition will generally provide soil springs four to five times stiffer than a free head boundary condition.

F. Spring Calculation (Method II)

The first step to calculate a foundation spring is to determine the shear and moment in the structural member where the spring is to be applied in the FEM. Foundation spring coefficients should be based on the maximum shear and moment from the applied longitudinal or transverse seismic loading. The combined load case (1.0*L* and 0.3*T*) shall be assumed for the design of structural members, and NOT applied to determine foundation response. For the simple case of a bridge with no skew, the longitudinal shear and moment are the result of the seismic longitudinal load, and the transverse components are ignored. This is somewhat unclear for highly skewed piers or curved structures with rotated springs, but the principle remains the same.

G. Matrix Coordinate Systems (Method II)

The Global coordinate systems used to demonstrate matrix theory are usually similar to the system defined for substructure loads in Section 7.1.3, and is shown in Figure 7.2.5-2. This is also the default Global coordinate system of GT STRUDL. This coordinate system applies to this Section to establish the sign convention for matrix terms. Note vertical axial load is labeled as *P*, and horizontal shear load is labeled as *V*.

Also note the default Global coordinate system in CSI BRIDGE uses *Z* as the vertical axis (gravity axis). When imputing spring values in CSI BRIDGE the coefficients in the stiffness matrix will need to be adjusted accordingly. CSI BRIDGE allows you to assign spring stiffness values to support joints. By default, only the diagonal terms of the stiffness matrix can be assigned, but when selecting the advanced option, terms to a symmetrical {6x6} matrix can be assigned.

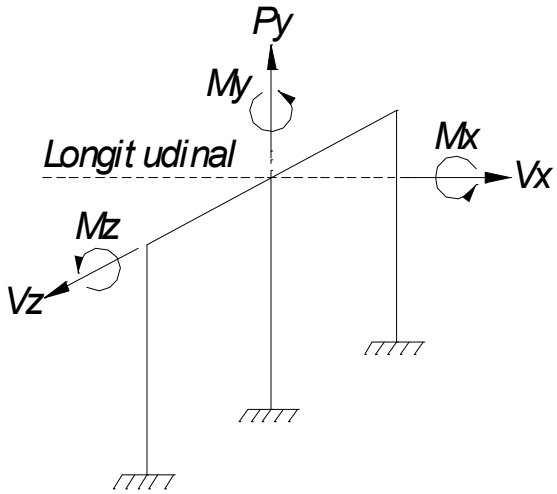

Global Coordinate System
Figure 7.2.5-2

H. Matrix Coefficient Definitions (Method II)

The stiffness matrix containing the spring values and using the standard coordinate system is shown in Figure 7.2.5-3. (Note that cross-couple terms generated using Technique I are omitted). For a description of the matrix generated using Technique I see Appendix 7-B1. The coefficients in the stiffness matrix are generally referred to using several different terms. Coefficients, spring or spring value are equivalent terms. Lateral springs are springs that resist lateral forces. Vertical springs resist vertical forces.

$$\begin{Bmatrix} & Vx & Py & Vz & Mx & My & Mz \\ Vx & K11 & 0 & 0 & 0 & 0 & 0 \\ Py & 0 & K22 & 0 & 0 & 0 & 0 \\ Vz & 0 & 0 & K33 & 0 & 0 & 0 \\ Mx & 0 & 0 & 0 & K44 & 0 & 0 \\ My & 0 & 0 & 0 & 0 & K55 & 0 \\ Mz & 0 & 0 & 0 & 0 & 0 & K66 \end{Bmatrix} \times \begin{Bmatrix} Disp. \\ \Delta x \\ \Delta y \\ \Delta z \\ \theta x \\ \theta y \\ \theta z \end{Bmatrix} = \begin{Bmatrix} Force \\ Vx \\ Py \\ Vz \\ Mx \\ My \\ Mz \end{Bmatrix}$$

Standard Global Matrix
Figure 7.2.5-3

Where the linear spring constants or K values are defined as follows, using the Global Coordinates:

K11 = Longitudinal Lateral Stiffness (kip/in)
K22 = Vertical or Axial Stiffness (kip/in)
K33 = Transverse Lateral Stiffness (kip/in)
K44 = Transverse Bending or Moment Stiffness (kip-in/rad)
K55 = Torsional Stiffness (kip-in/rad)
K66 = Longitudinal Bending or Moment Stiffness (kip-in/rad)

The linear lateral spring constants along the diagonal represent a point on a non-linear soil/structure response curve. The springs are only accurate for the applied loading and less accurate for other loadings. This is considered acceptable for Strength and Extreme Event design. For calculation of spring constants for Technique I see Appendix 7-B1.

I. Group Effects

When a foundation analysis uses LPILE or an analysis using PY relationships, group effects will require the geotechnical properties to be reduced before the spring values are calculated. The geotechnical report will provide transverse and longitudinal multipliers that are applied to the PY curves. This will reduce the pile resistance in a linear fashion. The reduction factors for lateral resistance due to the interaction of deep foundation members is provided in the *Geotechnical Design Manual* Section 8.12.2.5.

J. Shaft Caps and Pile Footings

Where pile supported footings or shaft caps are entirely below grade, their passive resistance should be utilized. In areas prone to scour or lateral spreading, their passive resistance should be neglected.

7.2.6 Lateral Analysis of Piles and Shafts

A. Determination of Tip Elevations

Lateral analysis of piles and shafts involves determination of a shaft or pile tip location sufficient to resist lateral loads in both orthogonal directions. In many cases, the shaft or pile tip depth required to resist lateral loads may be deeper than that required for bearing or uplift. However, a good starting point for a tip elevation is the depth required for bearing or uplift. Another good "rule-of-thumb" starting point for shaft tips is an embedment depth of 6 diameters (6*D*) to 8 diameters (8*D*). Refer also to the geotechnical report minimum tip elevations provided by the Geotechnical Engineer.

A parametric study or analysis should be performed to evaluate the sensitivity of the depth of the shaft or pile to the displacement of the structure (i.e. the displacement of the shaft or pile head) in order to determine the depth required for stable, proportionate lateral response of the structure. Determination of shaft or pile tip location requires engineering judgment, and consideration should be given to the type of soil, the confidence in the soil data (proximity of soil borings) and the potential variability in the soil profile. Arbitrarily deepening shaft or pile tips may be conservative but can also have significant impact on constructability and cost.

The following is a suggested approach for determining appropriate shaft or pile tip elevations that are located in soils. Other considerations will need to be considered when shaft or pile tips are located in rock, such as the strength of the rock. This approach is based on the displacement demand seismic design procedures specified in the AASHTO *Seismic Specifications*.

1. Size columns and determine column reinforcement requirements for Strength and Service load cases.
2. Determine the column plastic over-strength moment and shear at the base of the column using the axial dead load and expected column material properties. A program such as XTRACT or CSI BRIDGE may be used to help compute these capacities. The plastic moments and shears are good initial loads to apply to a soil response program. In some cases, Strength or other Extreme event loads may be a more appropriate load to apply in the lateral analysis. For example, in eastern Washington seismic demands are relatively low and elastic seismic or Strength demands may control.
3. Perform lateral analysis using the appropriate soil data from the Geotechnical report for the given shaft or pile location. If final soil data is not yet available, consult with the Geotechnical Engineer for preliminary values to use for the site.

   Note: Early in the lateral analysis it is wise to obtain moment and shear demands in the shaft or pile and check that reasonable reinforcing ratios can be used to resist the demands. If not, consider resizing the foundation elements and restart the lateral analysis.
4. Develop a plot of embedment depth of shaft or pile versus lateral deflection of the top of shaft or pile. The minimum depth, or starting point, shall be the depth required for bearing or uplift or as specified by the geotechnical report. An example plot of an 8′ diameter shaft is shown in Figure 7.2.6-1 and illustrates the sensitivity of the lateral deflections versus embedment depth. Notice that at tip depths of approximately 50′ (roughly 6*D*) the shaft head deflections begin to increase substantially with small reductions in embedment depth. The plot also clearly illustrates that tip embedment below 70′ has no impact on the shaft head lateral deflection.
5. From the plot of embedment depth versus lateral deflection, choose the appropriate tip elevation. In the example plot in Figure 7.2.6-1, the engineer should consider a tip elevation to the left of the dashed vertical line drawn in the Figure. The final tip elevation would depend on the confidence in the soil data and the tolerance of the structural design displacement. For example, if the site is prone to variability in soil layers, the engineer should consider deepening the tip; say 1 to 3 diameters, to ensure that embedment into the desired soil layer is achieved. The tip elevation would also depend on the acceptable lateral displacement of the structure. To assess the potential variability in the soil layers, the Geotechnical Engineer assigned to the project should be consulted.

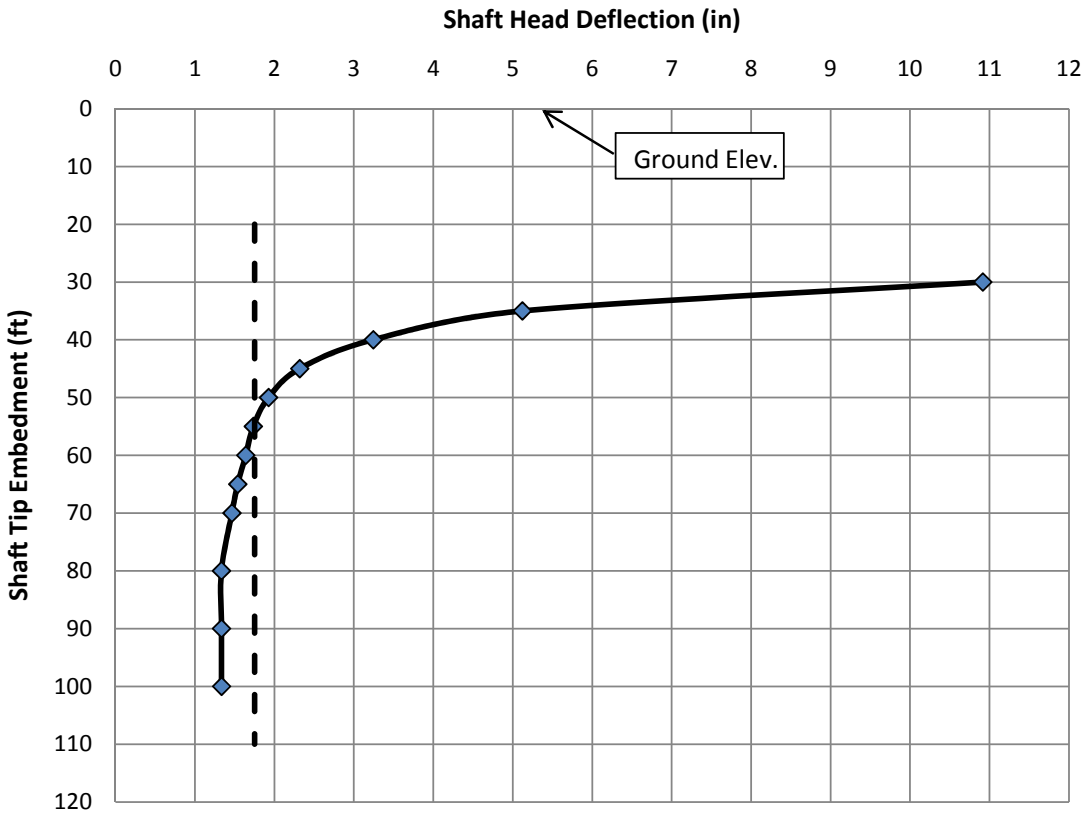

Shaft Tip Elevation vs Shaft Head Deflection
Figure 7.2.6-1

6. With the selected tip elevation, review the deflected shape of the shaft or pile, which can be plotted in LPILE. Examples are shown in Figure 7.2.6-2. Depending on the size and stiffness of the shaft or pile and the soil properties, a variety of deflected shapes are possible, ranging from a rigid body (fence post) type shape to a long slender deflected shape with 2 or more inflection points. Review the tip deflections to ensure they are reasonable, particularly with rigid body type deflected shapes. Any of the shapes in the Figure may be acceptable, but again it will depend on the lateral deflection the structure can tolerate.

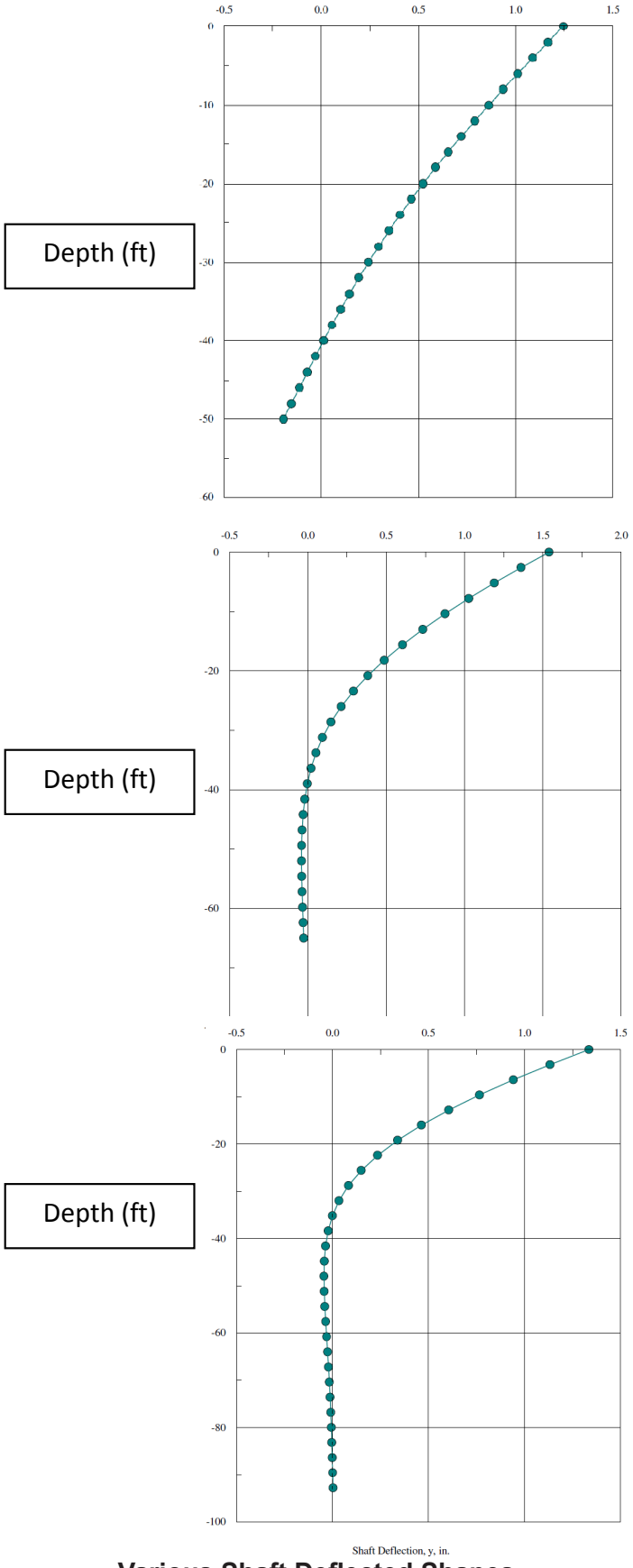

Various Shaft Deflected Shapes
Figure 7.2.6-2

The engineer will also need to consider whether liquefiable soils are present and/or if the shaft or pile is within a zone where significant scour can occur. In this case the analysis needs to be bracketed to envelope various scenarios. It is likely that a liquefiable or scour condition case may control deflection. In general, the WSDOT policy is to not include scour with Extreme Event I load combinations. In other words, full seismic demands or the plastic over-strength moment and shear, are generally not applied to the shaft or pile in a scoured condition. However, in some cases a portion of the anticipated scour will need to be included with the Extreme Event I load combination limit states. When scour is considered with the Extreme Event I limit state, the soil resistance up to a maximum of 25 percent of the scour depth for the design flood event (100 year) shall be deducted from the lateral analysis of the pile or shaft. In all cases where scour conditions are anticipated at the bridge site or specific pier locations, the Geotechnical Engineer and the Hydraulics Branch shall be consulted to help determine if scour conditions should be included with Extreme Event I limit states.

If liquefaction can occur, the bridge shall be analyzed using both the static and liquefied soil conditions. The analysis using the liquefied soils would typically yield the maximum bridge deflections and will likely control the required tip elevation, whereas the static soil conditions may control for strength design of the shaft or pile.

Lateral spreading is a special case of liquefied soils, in which lateral movement of the soil occurs adjacent to a shaft or pile located on or near a slope. Refer to the *Geotechnical Design Manual* M 46-03 for discussion on lateral spreading. Lateral loads will need to be applied to the shaft or pile to account for lateral movement of the soil. There is much debate as to the timing of the lateral movement of the soil and whether horizontal loads from lateral spread should be combined with maximum seismic inertia loads from the structure. Most coupled analyses are 2*D*, and do not take credit for lateral flow around shafts, which can be quite conservative. The AASHTO *Seismic Specifications* permits these loads to be uncoupled; however, the Geotechnical Engineer shall be consulted for recommendations on the magnitude and combination of loads. See *Geotechnical Design Manual* Sections 6.4.2.7 and 6.5.4 for additional guidance on combining loads when lateral spreading can occur.

B. Pile and Shaft Design for Lateral Loads

The previous section provides guidelines for establishing tip elevations for shafts and piles. Sensitivity analyses that incorporate both foundation and superstructure kinematics are often required to identify the soil conditions and loadings that will control the tip, especially if liquefied or scoured soil conditions are present. Several conditions will also need to be analyzed when designing the reinforcement for shafts and piles to ensure the controlling case is identified. All applicable strength, service and extreme load cases shall be applied to each condition. A list of these conditions includes, but is not limited to the following:

1. Static soil properties with both stiff and soft shaft or pile properties. Refer to Sections 7.2.3(B) and 7.2.3(C) for guidelines on computing stiff and soft shaft or pile properties.

2. Dynamic or degraded soil properties with both stiff and soft shaft or pile properties.
3. Liquefied soil properties with both stiff and soft shaft or pile properties.
    a. When lateral spreading is possible, an additional loading condition will need to be analyzed. The Geotechnical Engineer shall be consulted for guidance on the magnitude of seismic load to be applied in conjunction with lateral spreading loads. See *Geotechnical Design Manual* Sections 6.4.2.7 and 6.5.4 for additional guidance on combining loads when lateral spreading can occur.
4. Scour condition with stiff and soft shaft or pile properties. The scour condition is typically not combined with Extreme Event I load combinations, however the designer shall consult with the Hydraulics Branch and Geotechnical Engineer for recommendations on load combinations. If scour is considered with the Extreme Event I limit state, the analysis should be conducted assuming that the soil in the upper 25 percent of the estimated scour depth for the design (100 year) scour event has been removed to determine the available soil resistance for the analysis of the pile or shaft.

Note: Often, the highest acceleration the bridge sees is in the first cycles of the earthquake, and degradation and/or liquefaction of the soil tends to occur toward the middle or end of the earthquake. Therefore, early in the earthquake, loads are high, soil-structure stiffness is high, and deflections are low. Later in the earthquake, the soil-structure stiffness is lower and deflections higher. This phenomenon is normally addressed by bracketing the analyses as discussed above.

However, in some cases a site specific procedure may be required to develop a site specific design response spectrum. A site specific procedure may result in a reduced design response spectrum when compared to the general method specified in the AASHTO Seismic 3.4. Section 3.4 requires the use of spectral response parameters determined using USGS/AASHTO Seismic Hazard Maps. The AASHTO *Seismic Specifications* limits the reduced site specific response spectrum to two-thirds of what is produced using the general method. Refer to the *Geotechnical Design Manual* Chapter 6 for further discussion and consult the Geotechnical Engineer for guidance.

Refer to Section 7.8 Shafts and Chapter 4 for additional guidance/requirements on design and detailing of shafts and Section 7.9 Piles and Piling and Chapter 4 for additional guidance/requirements on design and detailing of piles.

7.2.7 Spread Footing Modeling

For a first trial footing configuration, Strength column moments or column plastic hinging moments may be applied to generate footing dimensions. Soil spring constants are developed using the footing plan area, thickness, embedment depth, Poisson's ratio ν, and shear modulus G. The Geotechnical Branch will provide the appropriate Poisson's ratio and shear modulus. Spring constants for shallow rectangular footings are obtained using the following equations developed for rectangular footings. This method for calculating footing springs is referenced in ASCE 41-06, Section 4.4.2.1.2. (***Note:*** ASCE 41-06 was developed from FEMA 356.)

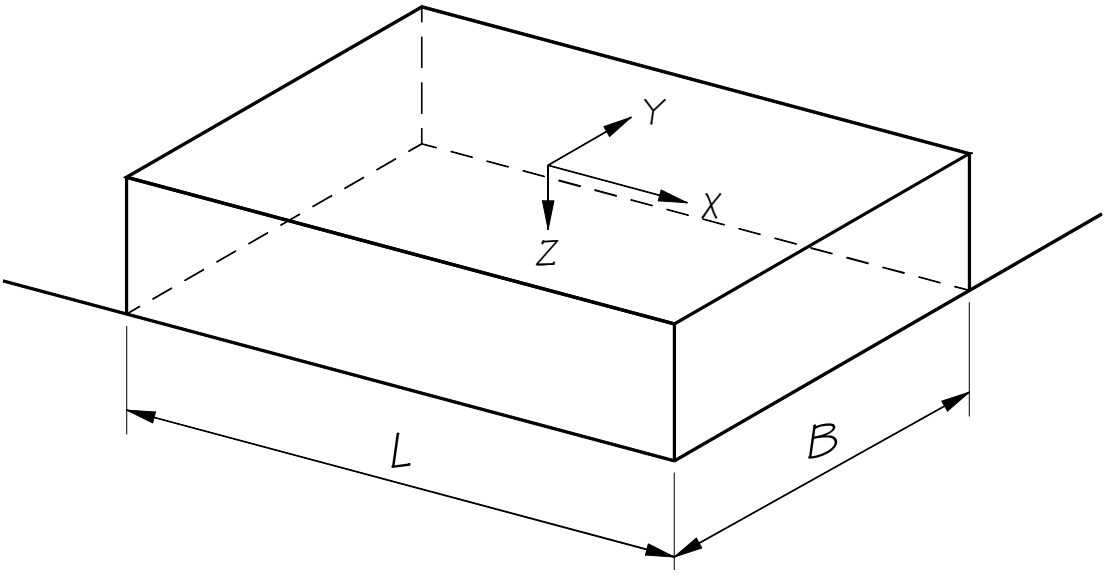

Orient axes such that $L > B$.
If $L = B$ use x-axis equations for both x-axis and y-axis.
Figure 7.2.7-1

Where:

K = βK_{sur}
K = Translation or rotational spring
K_{sur} = Stiffness of foundation at surface, see Table 7.2.7-1
β = Correction factor for embedment, see Table 7.2.7-2

Degree of Freedom	K_{sur}
Translation along x-axis	$\frac{GB}{2-v}\left[3.4\left(\frac{L}{B}\right)^{0.65}+1.2\right]$
Translation along y-axis	$\frac{GB}{2-v}\left[3.4\left(\frac{L}{B}\right)^{0.65}+0.4\frac{L}{B}+0.8\right]$
Translation along z-axis	$\frac{GB}{1-v}\left[1.55\left(\frac{L}{B}\right)^{0.75}+0.8\right]$
Rocking about x-axis	$\frac{GB^3}{1-v}\left[0.4\left(\frac{L}{B}\right)+0.1\right]$
Rocking about y-axis	$\frac{GB^3}{1-v}\left[0.47\left(\frac{L}{B}\right)^{2.4}+0.034\right]$
Torsion about z-axis	$GB^3\left[0.53\left(\frac{L}{B}\right)^{2.45}+0.51\right]$

Stiffness of Foundation at Surface
Table 7.2.7-1

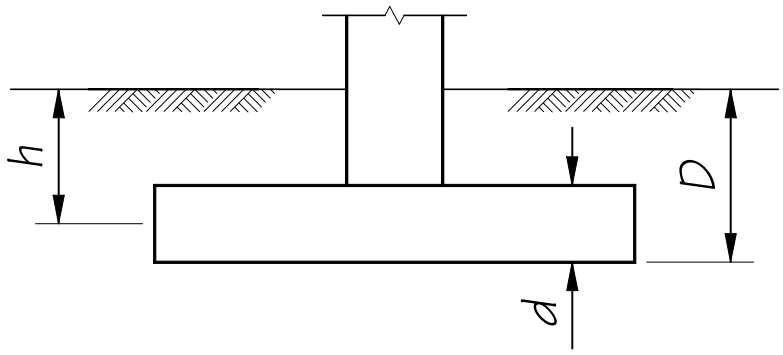

Where:

d = Height of effective sidewall contact (may be less than total foundation height if the foundation is exposed).

h = Depth to centroid of effective sidewall contact.

Figure 7.2.7-2

Degree of Freedom	β
Translation along x-axis	$\left(1+0.21\sqrt{\frac{D}{B}}\right)\left[1+1.6\left(\frac{hd(B+L)}{BL^2}\right)^{0.4}\right]$
Translation along y-axis	$\left(1+0.21\sqrt{\frac{D}{L}}\right)\left[1+1.6\left(\frac{hd(B+L)}{LB^2}\right)^{0.4}\right]$
Translation along z-axis	$\left[1+\frac{1}{21}\frac{D}{B}\left(2+2.6\frac{B}{L}\right)\right]\cdot\left[1+0.32\left(\frac{d(B+L)}{BL}\right)^{\frac{2}{3}}\right]$
Rocking about x-axis	$1+2.5\frac{d}{B}\left[1+\frac{2d}{B}\left(\frac{d}{D}\right)^{-0.2}\sqrt{\frac{B}{L}}\right]$
Rocking about y-axis	$1+1.4\left(\frac{d}{L}\right)^{0.6}\left[1.5+3.7\left(\frac{d}{L}\right)^{1.9}\left(\frac{d}{D}\right)^{-0.6}\right]$
Torsion about z-axis	$1+2.6\left(1+\frac{B}{L}\right)\left(\frac{d}{B}\right)^{0.9}$

Correction Factor for Embedment

Table 7.2.7-2

7.3 Column Design

7.3.1 General Design Considerations

The preliminary plan stage determines the initial column size, column spacing, and bridge span length based on a preliminary analysis. Columns are spaced to give maximum structural benefit except where aesthetic considerations dictate otherwise. Piers normally are spaced to meet the geometric and aesthetic requirements of the site and to give maximum economy for the total structure. Good preliminary engineering judgment results in maximum economy for the total structure.

The designer may make changes after the preliminary plan stage. The Design Unit Manager will need to review all changes, and if the changes are more than minor dimension adjustments, the Bridge Project Support Engineer and the State Bridge and Structures Architect will also need to be involved in the review.

Tall piers spaced farther apart aesthetically justify longer spans. Difficult and expensive foundation conditions will also justify longer spans. Span lengths may change in the design stage if substantial structural improvement and/or cost savings can be realized. The designer should discuss the possibilities of span lengths or skew with the Design Unit Manager as soon as possible. Changes in pier spacing at this stage can have significant negative impacts to the geotechnical investigation.

Column spacing should minimize column dead load moments. Multiple columns are better suited for handling lateral loads due to wind and/or earthquake. The designer may alter column size or spacing for structural reasons or change from a single-column pier to a multicolumn pier. Columns should be designed so that construction is as simple and repetitive as possible. The diameter of circular columns should be a multiple of one foot; however increments of 6 inches may be appropriate in some cases. Rectangular sections shall have lengths and widths that are multiples of 3 inches. Long rectangular columns are often tapered to reduce the amount of column reinforcement required for strength. Tapers should be linear for ease of construction.

For long columns, it may be advantageous to reduce the amount of reinforcement as the applied loads decrease along the column. In these cases, load combinations need to be generated at the locations where the reinforcement is reduced.

Bridge plans shall show column construction joints at the top of footing or pedestal and at the bottom of crossbeam. Optional construction joints with roughened surfaces should be provided at approximately 30-foot vertical spacing.

7.3.2 Slenderness Effects

This section supplements and clarifies AASHTO LRFD. The goal of a slenderness analysis is to estimate the additional bending moments in the columns that are developed due to axial loads acting upon a deflected structure. Two primary analysis methods exist: the moment magnifier method and the second-order analysis. The designer must decide which method to use based upon the slenderness ratio (kL_u/r) of the column(s). Figure 7.3.2-1 below illustrates the basic steps in the column design process for evaluating the effects of slenderness on columns and methods for computing magnification of moments on columns.

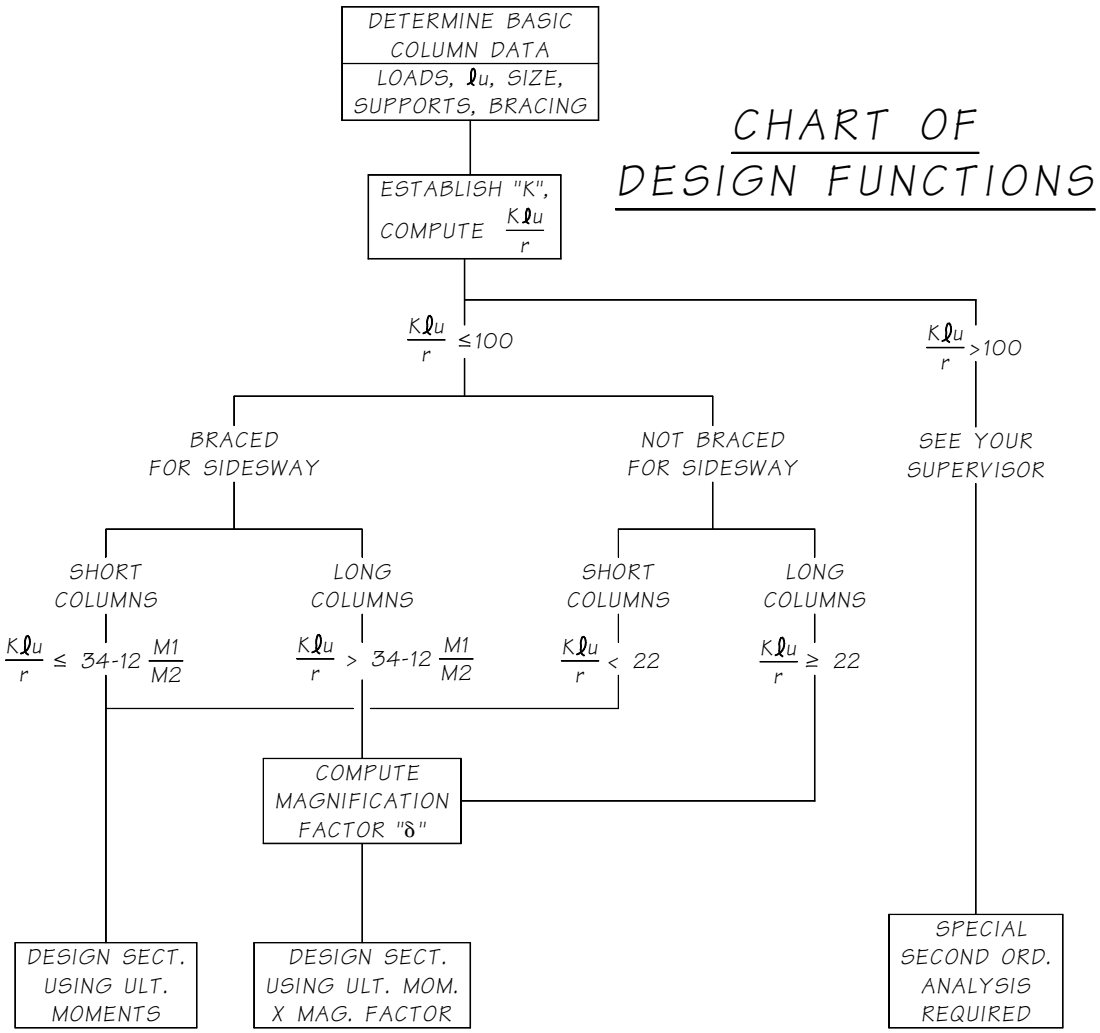

Column Design Flowchart for Non-Seismic Design
Figure 7.3.2-1

A. Moment Magnification Method

The moment magnification method is described in AASHTO LRFD Section 4.5.3.2.2. In general, if magnification factors computed using the AASHTO LRFD are found to exceed about 1.4, then a second-order analysis may yield substantial benefits.

In a member with loads applied at the joints, any significant lateral deflection indicated the member is unbraced. The usual practice is to consider the pier columns as unbraced in the transverse direction. The superstructure engages girder stops at the abutment and resists lateral sidesway due to axial loads. However, pier lateral deflections are significant and are considered unbraced. Short spanned bridges may be an exception. Most bridge designs provide longitudinal expansion bearings at the end piers. Intermediate columns are considered unbraced because they must resist the longitudinal loading. The only time a column is braced in the longitudinal direction is when a framed bracing member does not let the column displace more than $L/1500$. L is the total column length. In this case, the bracing member must be designed to take all of the horizontal forces.

B. Second-Order Analysis

A second-order analysis that includes the influence of loads acting on the deflected structure is required under certain circumstances, and may be advisable in others. It can lead to substantial economy in the final design of many structures. Computations of effective length factors, k, and buckling loads, Pc, are not required for a second-order analysis, though they may be helpful in establishing the need for such an analysis. The designer should discuss the situation with the Design Unit Manager before proceeding with the analysis. The ACI Building Code (ACI 318-08), should be consulted when carrying out a second-order analysis.

1. Design Methods for a Second-Order Analysis

For columns framed together, the entire frame should be analyzed as a unit. Analyzing individual columns result in overly conservative designs for some columns and non- conservative results for others. The preferred method for performing a second-order analysis of an entire frame or isolated single columns is to use a nonlinear finite element program with appropriate stiffness and restraint assumptions. The factored group loads are applied to the frame, including the self-weight of the columns. The model is then analyzed using the nonlinear option. The final design moments are obtained directly from the analysis.

PΔ moments are added to the applied moments using an iterative process until stability is reached. The deflections should converge within 5 percent of the total deflection. Analysis must include the effect of the column weight; therefore, the axial dead load must be adjusted as follows:

$$P_u = P_u + {}^1\!/_3\,(factored\ column\ weight) \qquad (7.3.2\text{-}1)$$

2. Applying Factored Loads

For a second-order analysis, loads are applied to the structure and the analysis results in member forces and deflections. It must be recognized that a second-order analysis is non-linear and the commonly assumed principle of superposition may not be applicable. The loads applied to the structure should be the entire set of factored loads for the load group under consideration. The analysis must be repeated for each group load of interest. The problem is complicated by the fact that it is often difficult to predict in advance which load groups will govern.

For certain loadings, column moments are sensitive to the stiffness assumptions used in the analysis. For example, loads developed as a result of thermal deformations within a structure may change significantly with changes in column, beam, and foundation stiffness. Accordingly, upper and lower bounds on the stiffness should be determined and the analysis repeated using both sets to verify the governing load has been identified.

3. Member Properties

As with a conventional linear elastic frame analysis, various assumptions and simplifications must be made concerning member stiffness, connectivity, and foundation restraint. Care must be taken to use conservative values for the slenderness analysis. Reinforcement, cracking, load duration, and their variation along the members are difficult to model while foundation restraint will be modeled using soil springs.

7.3.3 Shear Design

Shear design should follow the "Simplified Procedure for Nonprestressed Sections" in AASHTO LRFD Section 5.8.3.4.1.

7.3.4 Column Silos

Column silos are an acceptable technique to satisfy the balanced stiffness and frame geometry requirements of Section 4.2.7 and the AASHTO Seismic Specifications. Due to the construction and inspection complications of column silos, designers are encouraged to meet balanced stiffness and frame geometry requirements by the other methods suggested in Section 4.1.4 of the AASHTO Seismic Specifications prior to use of column silos.

A. General Design and Detailing Requirements

1. Column silo plans, specifications, and estimates shall be included in the Contract Documents.
2. Column silos shall be designed to resist lateral earth and hydrostatic pressure, including live load surcharge if applicable, for a 75-year minimum service life.
3. Column silos are not permitted for in-water locations such as in rivers and lakes.
4. Clearance between the column and the column silo shall be adequate for column lateral displacement demands, construction and post-earthquake inspection, but shall not be less than 1′-6″.

5. A 6″ minimum clearance shall be provided from the top of column silo to ground level.
6. Maximum depth of column silos shall not exceed 15 feet.
7. Column silos shall be watertight when located below the highest expected groundwater elevation. Silo covers need not be liquid tight.
8. Column silos shall be positively attached to the foundation element.

B. Column Silos Formed From Extending Shaft Casing

Designers shall determine a minimum steel casing thickness sufficient to resist lateral loads and shall provide it in the Contract Documents. This thickness shall include a sacrificial steel area as recommended in AASHTO *LRFD Specification* Section C10.7.5 for corrosion resistance. The actual steel casing size and materials shall be determined by the Contractor as delineated in *Standard Specifications* Section 6-19 and 9-36. Appropriate detailing, as shown in Figure 7.3.4-1, shall be provided. The designer shall check that the minimum column-to-silo horizontal clearance is provided even if the permanent casing is constructed with a smaller diameter slip casing.

C. Column Silos Formed by Other Methods

Column silos formed by other methods, such as corrugated metal pipes, may be considered if the general requirements above are satisfied.

D. Column Silo Covers and Access Hatches

A column silo cover, including access hatches, shall be specified in the Contract Plans as shown in Appendix 7.3-A1-1. Column silo covers and access hatches shall be painted in accordance with *Standard Specifications* Section 6-07.3(9).

Column silo covers shall be protected from vehicular loading. Column silo covers shall be capable of sliding on top of the column silo and shall not restrain column lateral displacement demands. Obstructions to the column silo cover sliding such as barriers or inclined slopes are not allowed adjacent to the column silo where they may interfere with column lateral displacement demands. Column silo covers and tops of column silos shall be level.

Sufficient access hatches shall be provided in the column silo cover so that all surfaces of the column and the column silo can be inspected. Access hatches shall include a minimum clear opening of 1′-0″ × 1′-0″ to accommodate the lowering of pumping and inspection equipment into the column silo. Access hatches for direct personnel access shall have a minimum clear opening of 2′-0″ square. Column silo covers shall be designed to be removable by maintenance and inspection personnel. Public access into the column silo shall be prevented.

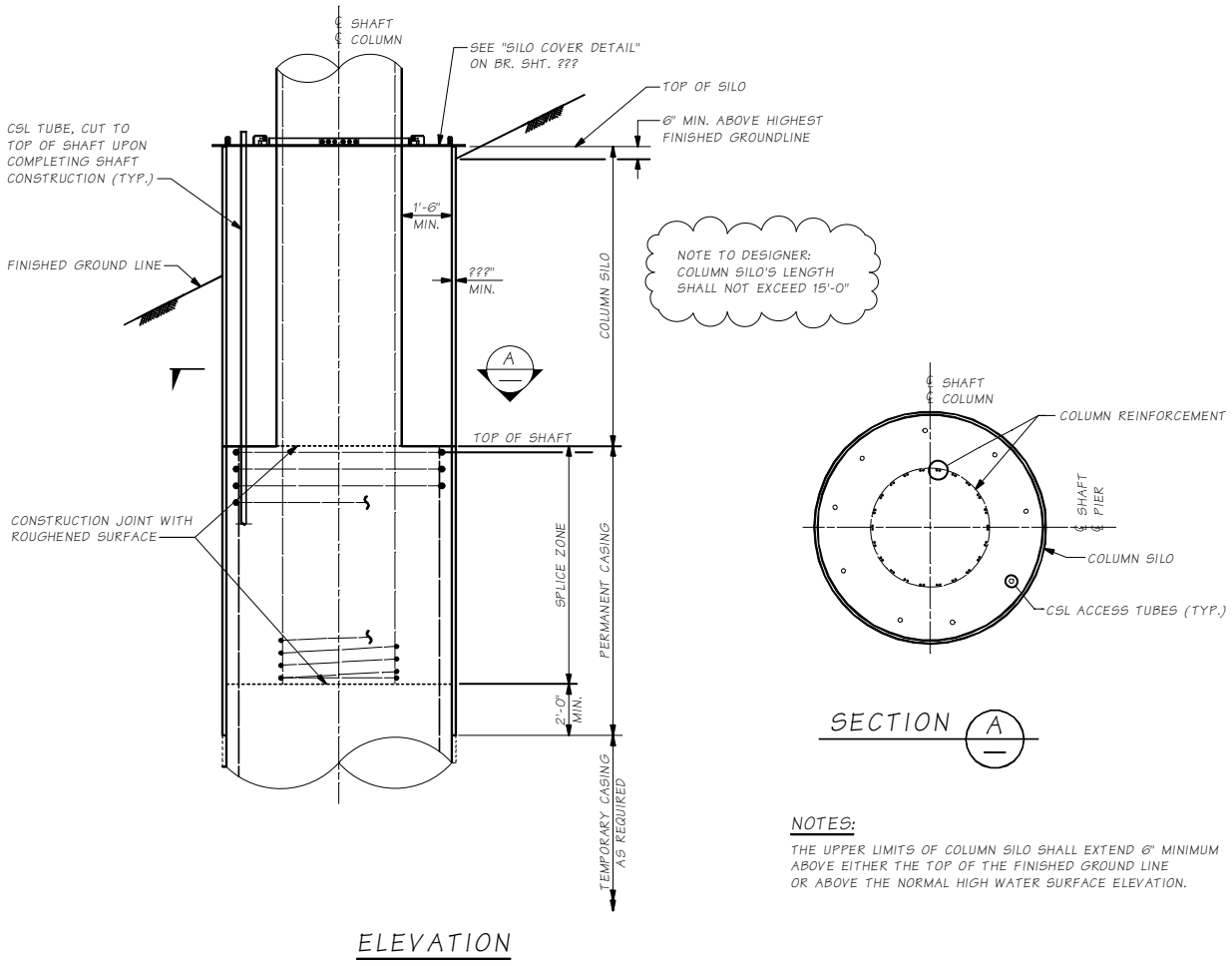

Column Silo on Shaft Foundation
Figure 7.3.4-1

7.3.5 Column Reinforcement

A. Reinforcing Bar Material

Steel reinforcing bars for all bridge substructure elements (precast and cast-in-place) shall be in accordance with Section 5.1.2.

B. Longitudinal Reinforcement

The reinforcement ratio is the steel area divided by the gross area of the section (As/Ag). The maximum reinforcement ratio shall be 0.04 in SDCs A, B, C and D. The minimum reinforcement ratio shall be 0.007 for SDC A, B, and C and shall be 0.01 for SDC D.

For bridges in SDC A, if oversized columns are used for architectural reasons, the minimum reinforcement ratio of the gross section may be reduced to 0.005, provided all loads can be carried on a reduced section with similar shape and the reinforcement ratio of the reduced section is equal to or greater than 0.01 and $0.133f'c/fy$. The column dimensions are to be reduced by the same ratio to obtain the similar shape.

The reinforcement shall be evenly distributed and symmetric within the column.

C. Longitudinal Splices

In general, no splices are allowed when the required length of longitudinal reinforcement is less than the conventional mill length (typically 60-feet). Splicing of longitudinal reinforcement shall be outside the plastic hinge regions. But in SDC A, splices need only be located a minimum of 1.5 times the column diameter from the top and bottom of the column. The bridge plans shall clearly identify the limits of the permissible splice zone. Figure 7.3.5-1 shows standard column reinforcement details.

For bridges in SDC's A and B, no lap splices shall be used for #14 or #18 bars. Either lap or mechanical splices may be used for #11 bars and smaller. Lap splices shall be detailed as Class B splices. The smaller bars in the splice determine the length of lap splice required. When space is limited, #11 bars and smaller can use welded splices, an approved mechanical butt splice, or the upper bars can be bent inward (deformed by double bending) to lie inside and parallel to the lower bars. The spacing of the transverse reinforcement over the length of a lap splice shall not exceed 4-inches or one-quarter of the minimum member dimension.

For bridge in SDC's C and D, bars shall be spliced using mechanical splices meeting the requirements of *Standard Specifications* Section 6-02.3(24)F. Splices shall be staggered. The distance between splices of adjacent bars shall be greater than the maximum of 20 bar diameters or 24-inches.

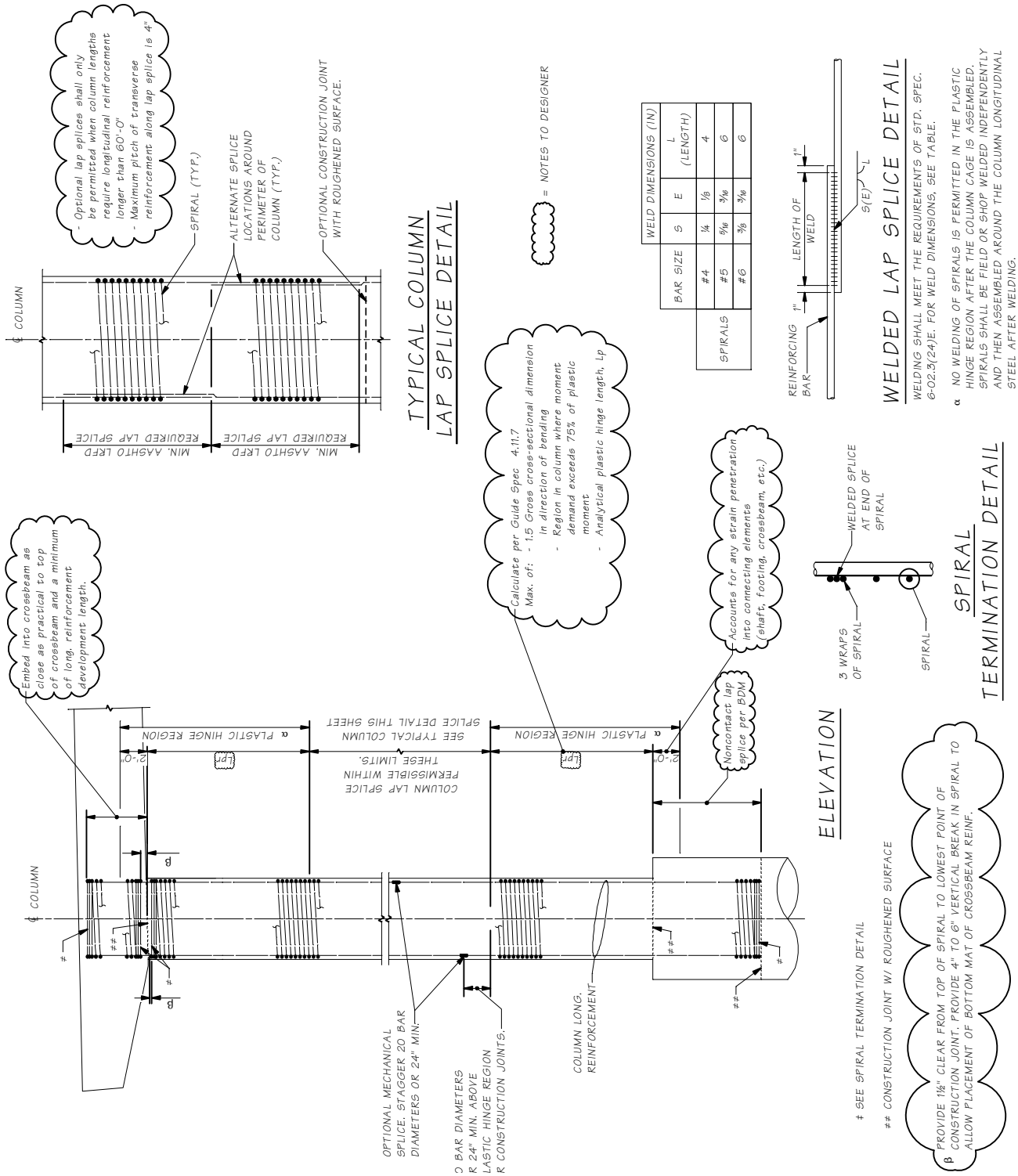

Column Splice and Plastic Hinge Region Details
Figure 7.3.5-1

D. Longitudinal Development

1. Crossbeams

Development of longitudinal reinforcement shall be in accordance with AASHTO Seismic, Sections 8.8.4 and 8.8.8. Column longitudinal reinforcement shall be extended into crossbeams as close as practically possible to the opposite face of the crossbeam (below the bridge deck reinforcement).

For precast prestressed concrete girder bridges in SDC A and B with fixed diaphragms at intermediate piers, column longitudinal reinforcement may be terminated at top of lower crossbeam, provided that adequate transfer of column forces is provided.

For precast prestressed concrete girder bridges in SDC C and D with two-stage fixed diaphragms at intermediate piers, all column longitudinal reinforcement should extend to the top of the cast-in-place concrete diaphragm (upper crossbeam) above the lower crossbeam. Careful attention should be given that column reinforcement does not interfere with extended strands projecting from the end of the prestressed concrete girders. In case of interference, column longitudinal reinforcement obstructing the extended strands may be terminated at top of the lower crossbeam, and shall be replaced with equivalent full-height stirrups extending from the lower to upper crossbeam within the effective width as shown in Figure 7.3.5-2. All stirrups within the effective zone, based on an approximate strut-and-tie model, may be used for this purpose. The effective zone shall be taken as column diameter plus depth of lower crossbeam provided that straight column bars are adequately developed into the lower crossbeam. The effective zone may be increased to the column diameter plus two times depth of lower crossbeam if headed bars are used for column longitudinal reinforcement.

If the depth of lower crossbeam is less than 1.25 times the tension development length required for column reinforcement, headed bars shall be used. Heads on column bars terminated in the lower crossbeam are preferable from a structural perspective. However, extra care in detailing during design and extra care in placement of the column reinforcement during construction is required. Typically the heads on the column bars will be placed below the lower crossbeam top mat of reinforcement. Headed reinforcement shall conform to the requirements of ASTM 970 Class HA.

Transverse column reinforcement only needs to extend to the top of the lower crossbeam just below the top longitudinal steel. However, when the joint shear principal tension is less than $0.11\sqrt{f'c}$, minimum cross tie reinforcement shall be placed acting across the upper cross beam in accordance with the AASHTO Seismic, Sections 8.13.3. The minimum cross tie reinforcement shall provide at least as much confining pressure at yield as the column spiral can provide at yield. This pressure may be calculated assuming hydrostatic conditions. If the joint shear principal tension exceeds $0.11\sqrt{f'c}$, then additional joint reinforcement as outlined by AASHTO Seismic, Sections 8.13.3 shall be provided. With the exception of J-bars, the additional reinforcement shall be placed in the upper and lower crossbeam. The cross tie reinforcement may be placed with a lap splice in the center of the joint.

Large columns or columns with high longitudinal reinforcement ratios may result in closely spaced stirrups with little clear space left for proper concrete consolidation outside the reinforcement. In such cases, either hanger reinforcement comprised of larger bars with headed anchors may be used in the effective zone shown in Figure 7.3.5-2 or supplemental stirrups may be placed beyond the effective zone. Hanger reinforcement in the effective zone is preferred.

The designer is encouraged to include interference detail/plan views of the crossbeam reinforcement in relation to the column steel in the contract drawings. Suggested plans include the views at the lower stage crossbeam top reinforcement and the upper crossbeam top reinforcement.

2. Footings

Longitudinal reinforcement at the bottom of a column should extend into the footing and rest on the bottom mat of footing reinforcement with standard 90° hooks. In addition, development of longitudinal reinforcement shall be in accordance with AASHTO Seismic, Sections 8.8.4 and AASHTO LRFD Sections 5.11.2.1. Headed bars may be used for longitudinal reinforcement at the bottom of columns. The head shall be placed at least 3-inches below the footing bottom mat reinforcement. This may require the footing to be locally thickened in the region of the column to provide cover for the bottom of the headed bars. The head of the rebar placed below the footing bottom reinforcement mat shall not contribute to the compressive capacity of the rebar.

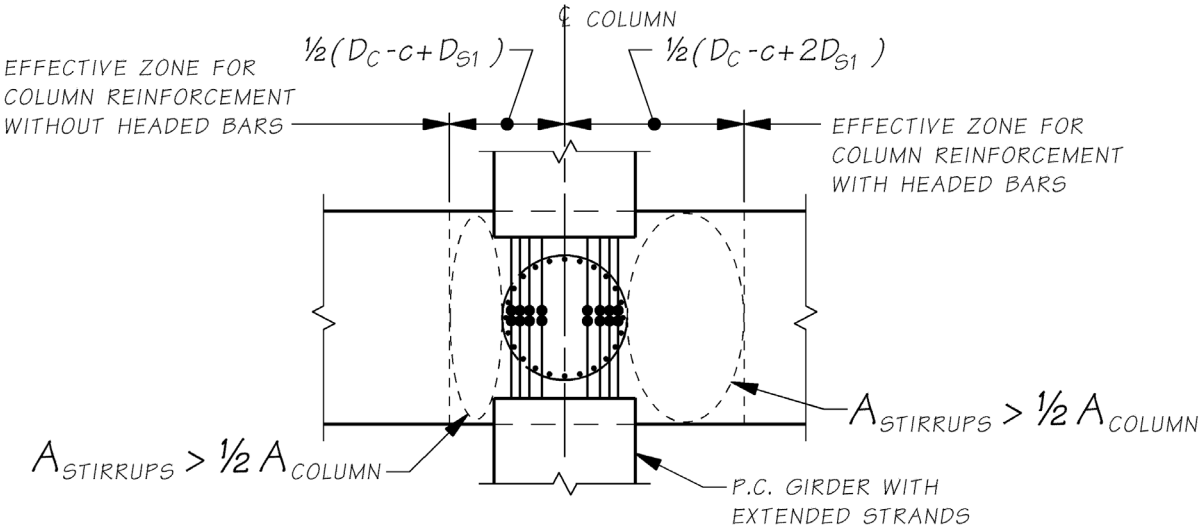

PLAN

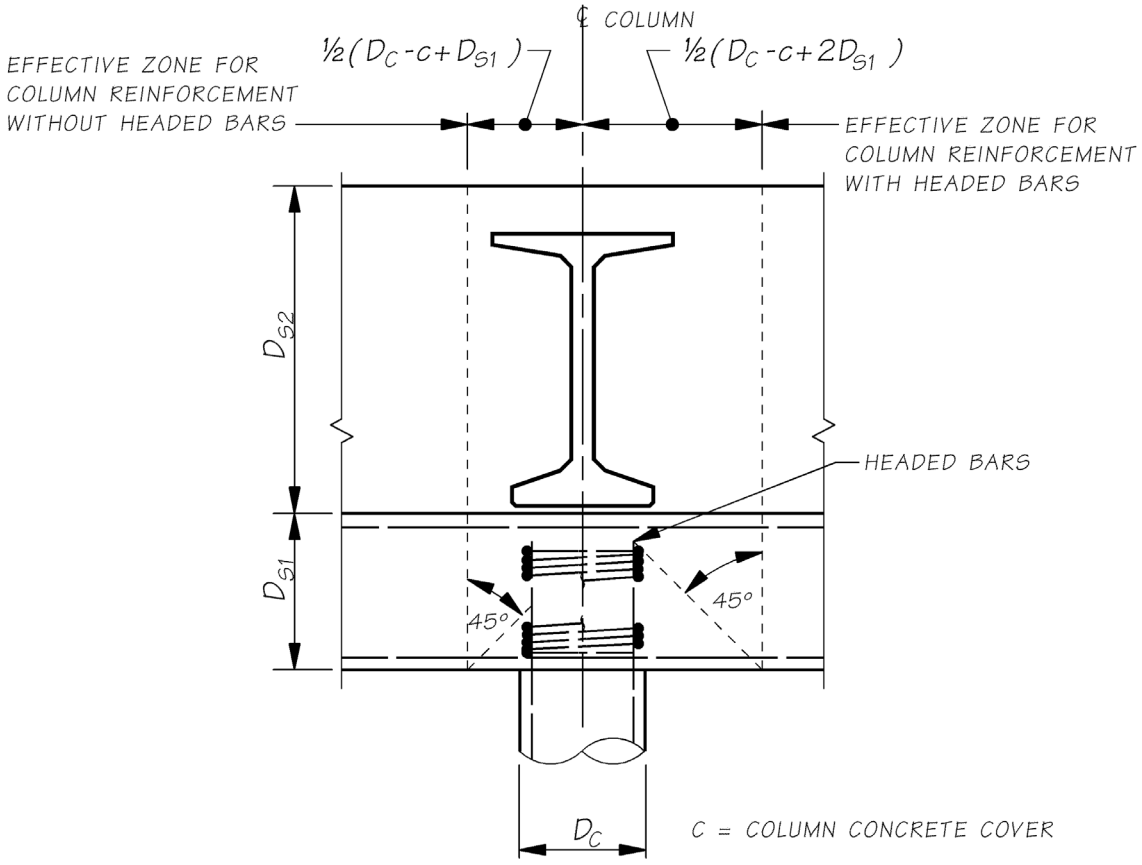

ELEVATION

Longitudinal Development Into Crossbeams
Figure 7.3.5-2

3. Shafts

Column longitudinal reinforcement in shafts is typically straight. Embedment shall be a minimum length equal to lns = ls + s (per TRAC Report WA- RD 417.1 titled *"Noncontact Lap Splices in Bridge Column-Shaft Connections"*).

Where:

l_s = the larger of $1.7 \times l_{ac}$ or $1.7 \times l_d$

l_{ac} = development length from the AASHTO Seismic 8.8.4 for the column longitudinal reinforcement.

l_d = tension development length from AASHTO LRFD Section 5.11.2.1 for the column longitudinal reinforcement.

s = distance between the shaft and column longitudinal reinforcement

The requirements of the AASHTO Seismic, Section 8.8.10 for development length of column bars extended into oversized pile shafts for SDC C and D shall not be used.

The factor of 1.7 used in determining ls represents a Class C lap splice modification factor from previous versions of AASHTO LRFD. Although the concept of a Class C splice is no longer applicable, the factor is still necessary to match the recommendations of TRAC Report WA-RD 417.1.

The modification factor in 5.11.2.1.3 that allows ld to be decreased by the ratio of (As required)/(As provided), shall not be used. Using this modification factor would imply that the reinforcement does not need to yield to carry the ultimate design load. This may be true in other areas. However, our shaft/column connections are designed to form a plastic hinge, and therefore the reinforcement shall have adequate development length to allow the bars to yield.

See Figure 7.3.5-3 for an example of longitudinal development into shafts.

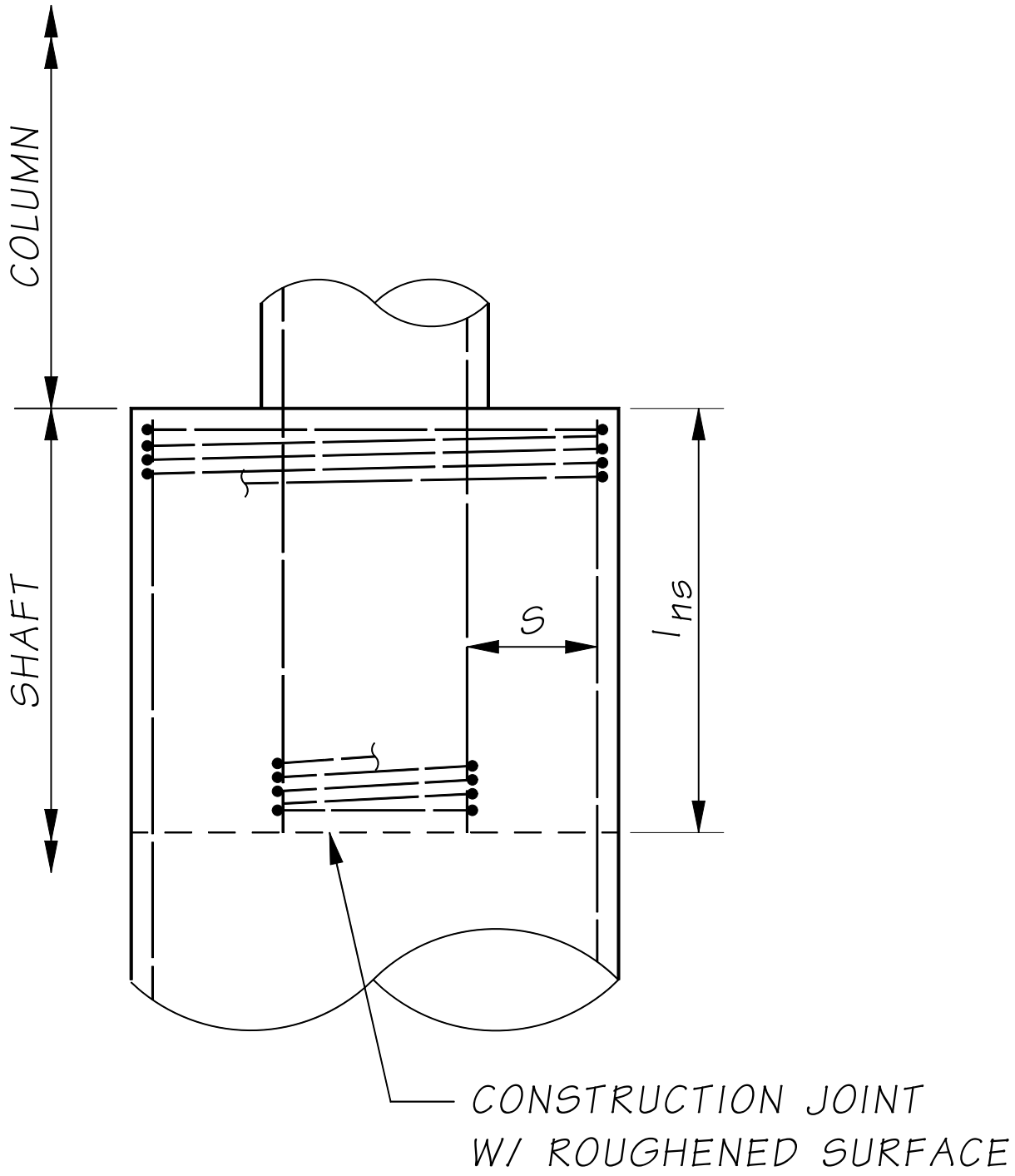

Longitudinal Development Into Shafts
Figure 7.3.5-3

E. Transverse Reinforcement

All transverse reinforcement in columns shall be deformed. Although allowed in the AASHTO LRFD, plain bars or plain wire may not be used for transverse reinforcement.

Columns in SDC A may use spirals, circular hoops, or rectangular hoops and crossties. Spirals are the preferred confinement reinforcement and shall be used whenever a #6 spiral is sufficient to satisfy demands. When demands require reinforcement bars greater than #6, circular hoops of #7 through #9 may be used. Bundled spirals shall not be used for columns or shafts. Also, mixing of spirals and hoops within the same column is not permitted by the AASHTO Seismic

Specifications. Figure 7.3.5-4 and 7.3.5-5 show transverse reinforcement details for rectangular columns in high and low seismic zones, respectively.

Columns in SDCs C and D shall use hoop reinforcement. Hoop reinforcement shall be circular where possible, although rectangular hoops with ties may be used when large, odd shaped column sections are required. Where the column diameter is 3-feet or less, the WSDOT Steel Specialist shall be contacted regarding the constructability of smaller diameter welded hoops.

When rectangular hoops with ties are used, consideration shall be given to column constructability. Such considerations can include, but are not limited to a minimum of 2′-6″ by 3′-0″ open rectangle to allow access for the tremie tube and construction workers for concrete placement, in-form access hatches, and/or external vibrating.

A larger gap between transverse reinforcement should be provided at the top of columns to allow space for the crossbeam longitudinal reinforcement to pass. In SDC's C & D, the gap shall not exceed the maximum spacing for lateral reinforcement in plastic hinge regions specified in AASHTO Seismic, Section 8.8.9. This can be of particular concern in bridge decks with large superelevation cross slopes.

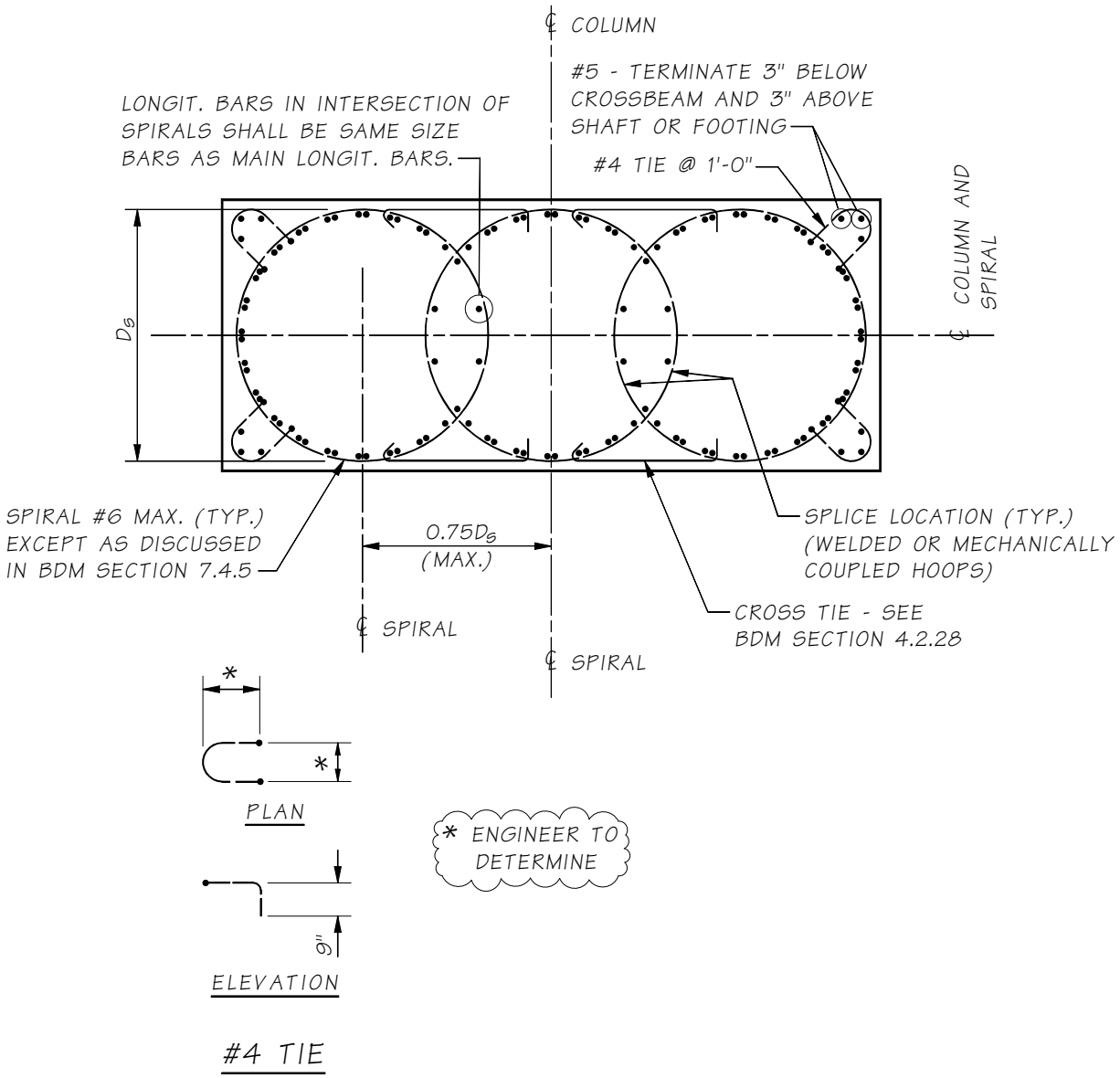

Constant and Tapered Rectangular Column Section SDCs C and D
Figure 7.3.5-4

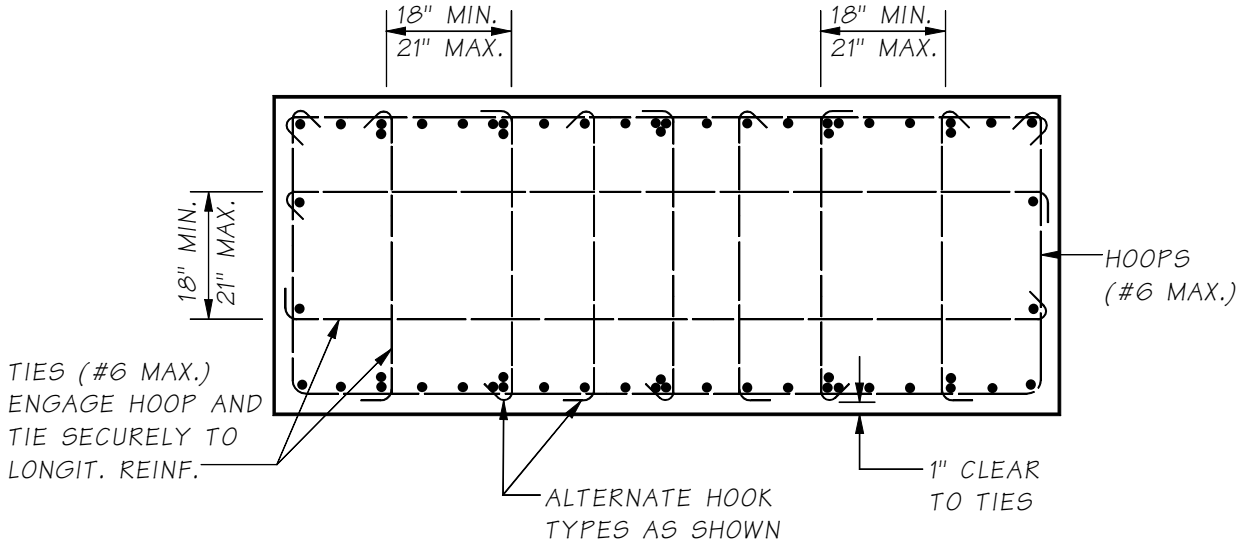

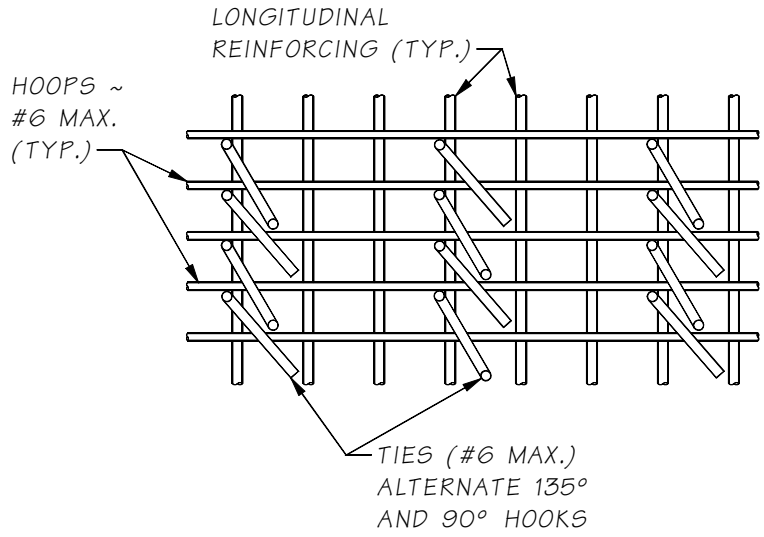

Constant and Tapered Rectangular Column Section SDCs A and B
Figure 7.3.5-5

F. Spiral Splices and Hoops

Welded laps shall be used for splicing and terminating spirals and shall conform to the details shown in Figure 7.3.5-6. Only single sided welds shall be used, which is the preferred method in construction. Spirals or butt- welded hoops are required for plastic hinge zones of columns. Lap spliced hoops are not permitted in columns in any region.

Although hooked lap splices are structurally acceptable, and permissible by AASHTO LRFD for spirals or circular hoops, they shall not be allowed due to construction challenges. While placing concrete, tremies get caught in the protruding hooks, making accessibility to all areas and its withdrawal cumbersome. It is also extremely difficult to bend the hooks through the column cage into the core of the column.

When welded hoops are used, the plans shall show a staggered pattern around the perimeter of the column so that no two adjacent welded splices are located at the same location. Also, where interlocking hoops are used in rectangular or non-circular columns, the splices shall be located in the column interior.

Circular hoops for columns shall be shop fabricated using a manual direct butt weld or resistance butt weld. Currently, a Bridge Special Provision has been developed to cover the fabrication requirements of hoops for columns and shafts, which may eventually be included in the *Standard Specifications*. Manual direct butt welded hoops require radiographic nondestructive examination (RT), which may result in this option being cost prohibitive at large quantities.

Columns with circular hoop reinforcement shall have a minimum 2” concrete cover to the hoops to accommodate resistance butt weld “weld flash” that can extend up to ½” from the bar surface.

Field welded lap splices and termination welds of spirals of any size bar are not permitted in the plastic hinge region including a zone extending 2’-0” into the connected member and should be clearly designated on the contract plans. If spirals are welded while in place around longitudinal steel reinforcement, there is a chance that an arc can occur between the spiral and longitudinal bar. The arc can create a notch that can act as a stress riser and may cause premature failure of the longitudinal bar when stressed beyond yield. Because high strains in the longitudinal reinforcement can penetrate into the connected member, welding is restricted in the first 2’-0” of the connected member as well. It would acceptable to field weld lap splices of spirals off to the side of the column and then slide into place over the longitudinal reinforcement.

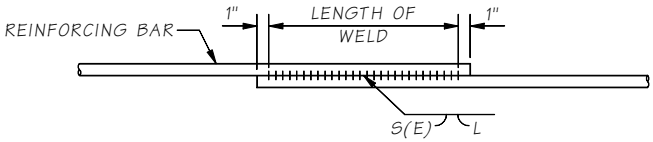

WELDED LAP SPLICE DETAIL

WELDED LAP SPLICE IS SUITABLE FOR SPIRALS IN COLUMNS AND SHAFTS UP TO BAR SIZE #6. LAP SPLICE FOR BAR SIZES #7 TO #9 ARE ONLY INTENDED FOR SHAFT HOOPS. WELDING SHALL MEET THE REQUIREMENTS OF STD. SPEC. 6-02.3(24)E. FOR WELD DIMENSIONS, SEE TABLE BELOW.

		WELD DIMENSIONS (IN)		
	BAR SIZE	S	E	L (LENGTH)
SPIRALS	#4	1/4	1/8	4
	#5	5/16	3/16	6
	#6	3/8	3/16	6
HOOPS FOR SHAFTS	#7	7/16	1/4	7
	#8	1/2	1/4	8
	#9	9/16	5/16	8

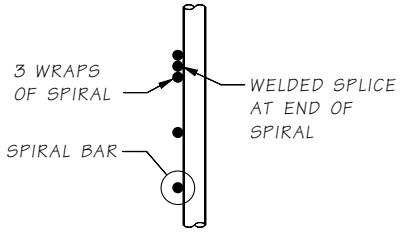

SPIRAL TERMINATION DETAIL

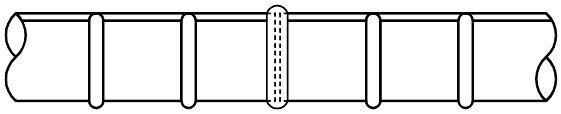

RESISTANCE BUTT JOINT DETAIL

SEE SPECIAL PROVISIONS FOR APPROVAL AND TESTING REQUIRMENTS

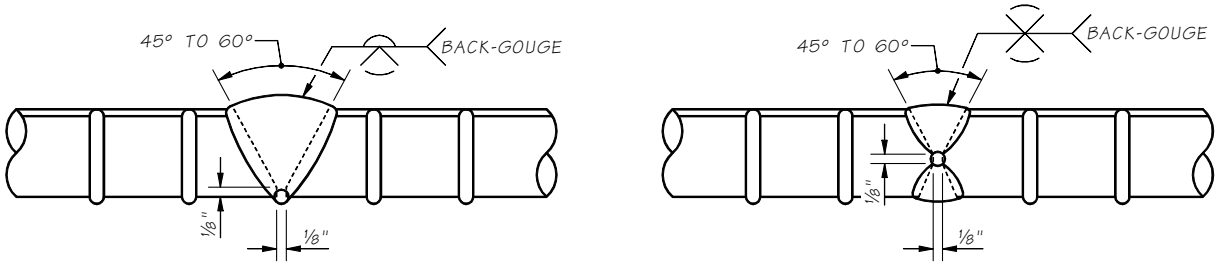

SINGLE V-GROOVE WELD
AWS D1.4 FIGURE 3.2(A)

DOUBLE V-GROOVE WELD
AWS D1.4 FIGURE 3.2(B)

MANUAL DIRECT BUTT JOINT DETAILS

ALL BACKING SHALL BE REMOVED.
SEE SPECIAL PROVISIONS FOR RT TESTING FREQUENCY

Welded Spiral Splice and Butt Splice Details
Figure 7.3.5-6

7.3.6 Column Hinges

Column hinges of the type shown in Figure 7.3.6-1 were built on past WSDOT bridges. Typically they were used above a crossbeam or wall pier. These types of hinges are suitable when widening an existing bridge crossbeam or wall pier with this type of detail. The area of the hinge bars in square inches is as follows:

$$A_s = \frac{\frac{P_u}{2} + \sqrt{\left(\frac{P_u}{4}\right)^2 + {V_u}^2}}{0.85 * F_y * cos\theta} \quad (7.3.6\text{-}1)$$

Where:

P_u is the factored axial load
V_u is the factored shear load
F_y is the reinforcing yield strength (60 ksi)
θ is the angle of the hinge bar to the vertical

The development length required for the hinge bars is 1.25 ld. All applicable modification factors for development length in AASHTO LRFD Section 5.11.2 may be used when calculating ld. Tie and spiral spacing shall conform to AASHTO LRFD confinement and shear requirements. Ties and spirals shall not be spaced more than 12″ (6″ if longitudinal bars are bundled). Premolded joint filler should be used to assure the required rotational capacity. There should also be a shear key at the hinge bar location.

When the hinge reinforcement is bent, additional confinement reinforcing may be necessary to take the horizontal component from the bent hinge bars. The maximum spacing of confinement reinforcing for the hinge is the smaller of that required above and the following:

$$S_{max} = \frac{A_v F_y}{\left[\frac{P_u \tan\theta}{.85 l_h} + \frac{V_s}{d}\right]} \quad (7.3.6\text{-}2)$$

Where:

Av, Vs, and d are as defined in AASHTO Article “Notations” 1h is the distance from the hinge to where the bend begins

Continue this spacing one-quarter of the column width (in the plane perpendicular to the hinge) past the bend in the hinge bars.

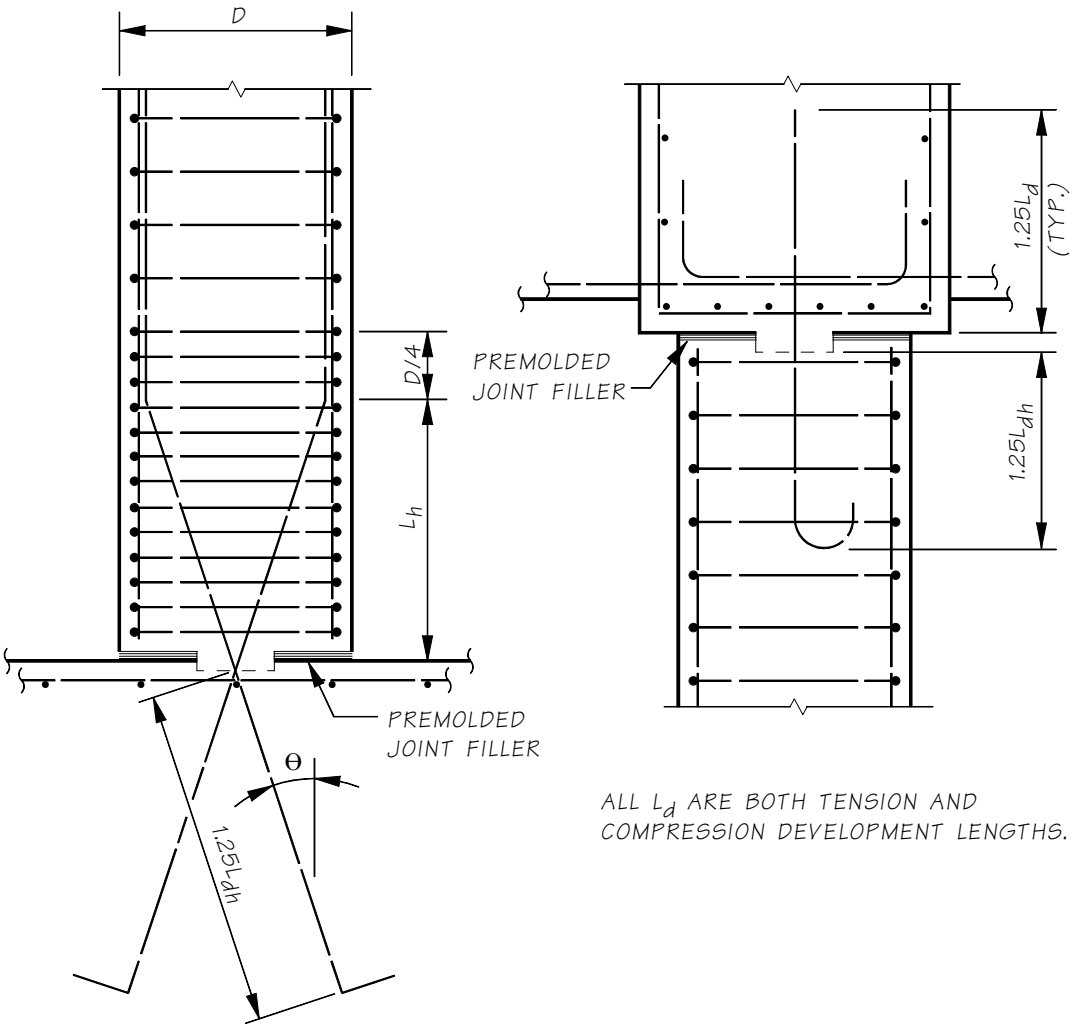

Hinge Details
Figure 7.3.6-1

7.3.7 Reduced Column Section

Reduced column sections decrease overstrength plastic demands into the foundation. Traditional column designs are preferred over this detail, but this may be used if it is determined that traditional details will not satisfy the design code requirements due to architectural, balanced stiffness, or other project specific requirements. The reduction at the base of the column shall be designed as described below and detailed as shown in Figure 7.3.7-1. The concept is shown in Figure 7.3.7-1 for a spread footing foundation, but could be used for shaft and pile supported foundations also. Similar checks are required if the reduced section is placed at the crossbeam, along with any additional checks required for those sections. One such additional check is joint shear in the crossbeam based on the overstrength plastic capacity of the reduced column section.

The design and detail at the top of columns, for architectural flares, is similar.

A. Inner Concrete Column

1. Longitudinal Reinforcement

a. The longitudinal inner column reinforcement shall extend a distance of L_{ns} into the column and shall be set on top of bottom mat reinforcement of foundation with standard 90° hooks.

$$L_{ns} = L_s + sc + L_p \quad (7.3.7\text{-}1)$$

Where:

L_s = The larger of 1.7×Lac or 1.7×Ld (for Class C lap splice)

L_{ac} = Development length of bar from the AASHTO Seismic Section 8.8.4

L_d = Tension development length from AASHTO LRFD Section 5.11.2.1 (Note: All applicable modification factors for Ld may be used except for the reduction specified in Section 5.11.2.2.2 for As required/As provided)

sc = Distance from longitudinal reinforcement of outer column to inner column.

L_p = Analytical Plastic Hinge Length defined in the AASHTO Seismic Section 4.11.6-3.

b. The longitudinal reinforcing in the inner column shall meet all the design checks in the AASHTO Seismic and AASHTO LRFD. Some specific checks of the inner column (inner core) will be addressed as follows:

i. A shear friction check shall be met using the larger of the overstrength plastic shear (Vpo) or the ultimate shear demand from strength load cases at the hinge location. The area of longitudinal inner column reinforcement, Ast, in excess of that required in the tensile zone for flexural resistance (usually taken as ½ the total longitudinal bars) may be used for the required shear friction reinforcement, Avf.

ii. The flexural capacity of the inner column shall be designed to resist the strength load cases and meet cracking criteria of the service load cases. Special consideration shall be given to construction staging load cases where the column stability depends on completion of portions of the superstructure.

iii. The axial resistance of the inner column shall meet the demands of strength load cases assuming the outer concrete has cracked and spalled off. The gross area, A_g, shall be the area contained inside the spiral reinforcement.

iv. The inner core shall be designed and detailed to meet all applicable requirements of AASHTO Seismic Section 8.

2. Transverse Reinforcement

a. The portion of the transverse reinforcement for the inner core, inside the larger column dimension (above the foundation), shall meet all the requirements of the AASHTO Seismic and AASHTO LRFD. The demand shall be based on the larger of the overstrength plastic shear demand (V_{po}) of the inner column or the ultimate shear demand from strength load cases at the hinge location. The transverse reinforcement shall be extended to the top of the longitudinal reinforcement for the inner column (L_{ns}).

b. The portion of transverse reinforcement for the inner core, in the foundation, shall meet the minimum requirements of the AASHTO Seismic, Section 8.8.8, for compression members, based on the dimensions of the inner column. This reinforcement shall be extended to the bend radius of the of the longitudinal inner column reinforcement for footings or as required for column-shaft connections.

c. A gap in the inner column transverse reinforcement shall be sized to allow the foundation top mat reinforcement and foundation concrete to be placed prior to setting the upper portion of the transverse inner column reinforcement. This gap shall be limited to 5″; a larger gap will require the WSDOT Bridge Design Engineer's approval. The spiral reinforcement above the footing shall be placed within 1″ of the top of footing to reduce the required gap size. The WSDOT Spiral termination details will be required at each end of this gap, the top of the upper transverse reinforcement, but not the bottom of the lower transverse reinforcement with spread footings.

3. Analytical Plastic Hinge Region

a. The analytical plastic hinge length of the reduced column section shall be based on horizontally isolated flared reinforced concrete columns, using Equation 4.11.6-3 of the AASHTO *Seismic Specifications*.

b. The end of the column which does not have a reduced column section shall be based on Equation 4.11.6-1 of the AASHTO *Seismic Specifications*.

B. Outer Concrete Column

1. The WSDOT Bridge and Structures Office normal practices and procedures shall be met for the column design, with the following exceptions:
   i. The end with the reduced column shall be detailed to meet the seismic requirements of a plastic hinge region. This will ensure that if a plastic hinge mechanism is transferred into the large column shape, it will be detailed to develop such hinge. The plastic shear this section shall be required to resist shall be the same as that of the inner column section.
   ii. The WSDOT spiral termination detail shall be placed in the large column at the reduced section end, in addition to other required locations.
   iii. In addition to the plastic hinge region requirements at the reduced column end, the outer column spiral reinforcement shall meet the requirements of the WSDOT *Noncontact Lap Splices in Bridge Column-Shaft Connections*. The k factor shall be taken as 0.5 if the column axial load, after moment distribution, is greater than $0.10f'cAg$ and taken as 1.0 if the column axial load is in tension. Ag shall be taken as the larger column section. Linear interpolation may be used between these two values.
2. The column end without the reduced column section shall be designed with WSDOT practices for a traditional column, but shall account for the reduced overstrength plastic shear, applied over the length of the column, from the overstrength plastic capacities at each column end.

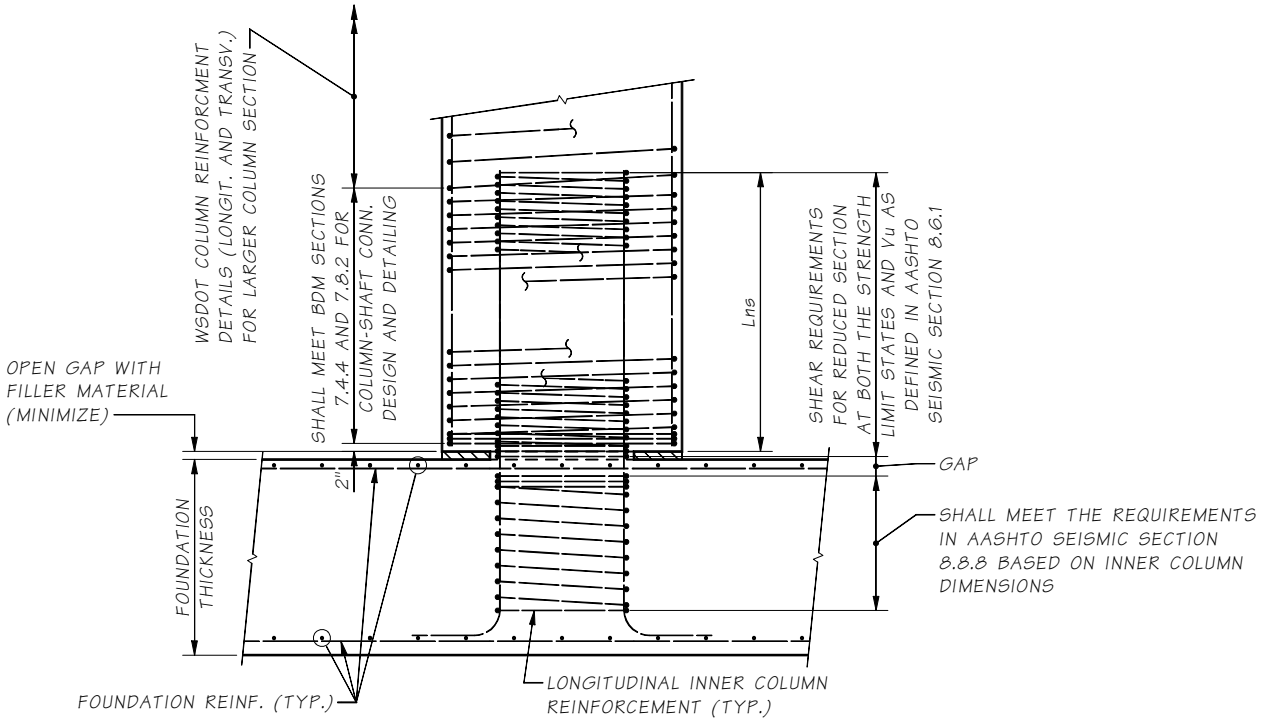

Reduced Column Section at Bottom of Column
Figure 7.3.7-1

C. Gap in Concrete at Reduced Column Section

The gap shall be minimized, but shall not be less than 2″. It shall also be designed to accommodate the larger of 1.5 times the calculated service, strength or extreme event elastic rotation demand or the plastic rotation capacity, as determined from an inelastic pushover analysis. In no loading condition shall the edge of the larger column section contact the footing.

The gap shall be constructed with a material sufficiently strong to support the wet concrete condition. The material in the gap must keep soil or debris out of the gap for the life of the structure. This is especially important if the gap is to be buried and inspection access is difficult. If a filler material is used in this gap which can transfer compressive forces, then the gap shall be increased to account for this compressive force. If a filler material can meet construction and service requirements, it can be left in place after construction. Otherwise the gap shall be cleared and covered, or the gap shall be filled with a material that meets the service requirements. See Figure 7.3.7-2.

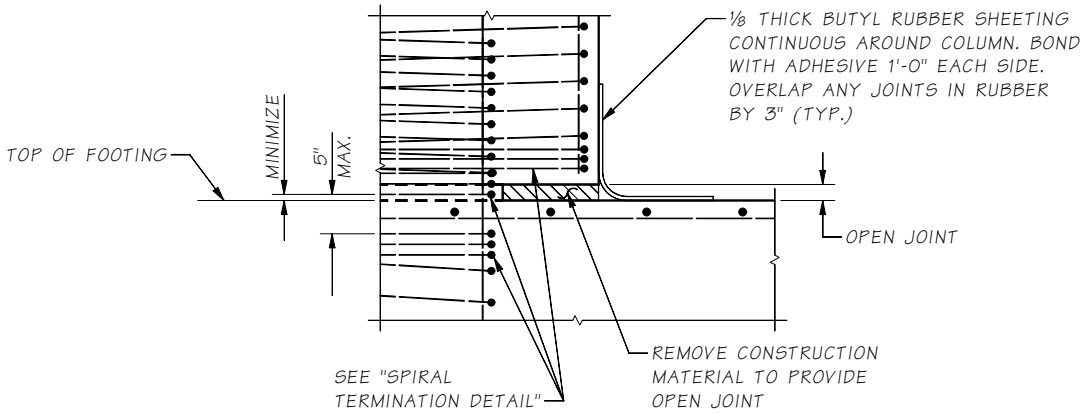

Open Gap Detail
Figure 7.3.7-2

7.4 Crossbeams

7.4.1 General Design

The following is the recommended procedure for strength design and load rating of a two-stage, integral, non-prestressed crossbeam at multicolumn intermediate piers supporting precast superstructures. The procedure is based on beam theory for a tension-controlled element, which is an acceptable method for design and load rating. The strut and tie method is also an acceptable procedure.

A. Stage I Design

1. Obtain load effects on the lower stage I crossbeam. The dead loads on the crossbeam typically include the self-weight of the lower crossbeam, girders, diaphragms, bridge deck, and the dead load from the upper stage II portion of the crossbeam. Additionally:
   - A construction load equal to 15 psf over the entire deck area shall be included in the Strength I and III load combinations. This construction load is intended to account for formwork, work decks, miscellaneous materials and equipment, and any construction related live loads (Bidwell finishing machine, etc.). The load factor for the construction load shall be in accordance with Section 3.6.
   - Strength IV, which is the load combination relating to very high dead load to live load force effects, need not be considered for this condition as clarified in the 7th Edition of the AASTHO *LRFD Bridge Design Specifications*.
   - Torsion due to unbalanced loading on the stage I crossbeam shall be considered. The unbalanced cases shall include at a minimum, the case where all girders are set on one side of the pier and the case where all girders are in place on both sides but the deck is only placed on one side of the pier.
2. Design the longitudinal reinforcement in the top and bottom of the lower crossbeam for the controlling strength load case.
3. Design the transverse reinforcement in the lower crossbeam considering the controlling strength shear demands, including the construction load previously described. Only the transverse reinforcement that is fully enclosed and anchored within the stage I crossbeam shall be considered to be effective.
4. Check minimum flexural and shear reinforcement, crack control by distribution of flexural steel, and temperature and shrinkage requirements.

B. Stage II Design

1. The stage II crossbeam is full depth and fully composite with the stage I lower portion. Apply the total DC, DW, LL, TU, and all other applicable load effects on the stage II crossbeam, including loads which were applied to the stage I crossbeam. This is a simplified procedure assuming the entire full depth crossbeam is cast monolithic, and it may imply some load redistribution. The construction load of 15 psf need not be considered in the stage II analysis.

2. Design the top and bottom longitudinal reinforcement for the controlling strength load case. For the bottom reinforcement, use the largest required steel area for either the stage I or stage II case. The crossbeam may either be treated as a rectangular section, or the effective width of the deck can be considered as a "T" section. The top longitudinal reinforcement in the stage I lower crossbeam is typically ignored.

3. Design the transverse reinforcement for the combination of the controlling strength load case. For most crossbeams, torsion in the stage II analysis can be ignored. The concrete shear resistance shall be computed assuming the full depth section. The transverse steel shear resistance shall be based on the sum of V_{s1} and V_{s2}. The V_{s1} resistance shall be based on the shear steel and depth d_v from the stage I crossbeam. The V_{s2} resistance shall be based on the shear steel that runs full depth and a d_v value corresponding to the full depth of the crossbeam. Each vertical leg of transverse reinforcement shall only be considered in either V_{s1} or V_{s2}, never both. In the zones where girders are located, the outer rows of full depth shear reinforcement is terminated. For inner rows of full depth shear reinforcement, the spacing may be increased where there is congestion due to extended girder strands, however the designer shall maintain as much shear reinforcement in these zones as practicably possible.

   In the regions where shear reinforcement spacing varies across the shear failure plane, the resistance may be determined based on the average shear reinforcement area per unit length within the shear failure plane. The average shear reinforcement area per unit length may be determined as follows:

$$\left(\frac{A_v}{s}\right)_{avg} = \frac{\sum\left(\frac{A_v}{s}\right)_i a_i}{d_v \cot\theta} \qquad 7.4.1\text{-}1$$

Where:

A_v = area of shear reinforcement
s = spacing of shear reinforcement
a_i = horizontal distance of shear plane crossing the stirrup zone i
d_v = effective shear depth
$\cot\theta$ = for the simplified method, $\theta = 45$ degrees and $\cot\theta = 1.0$

See Figure 7.4.1-1. For deep girders, the shear failure plane at 45 degrees will typically run beyond the girder width and will intersect shear reinforcement on either side of the girder. For smaller depth girders, such as WF42Gs, this average shear reinforcement method may not suffice and more steel will need to be placed in the girder zones, regardless of congestion constraints.

The concrete shear resistance, V_c, shall be based on the depth d_v from the stage II crossbeam.

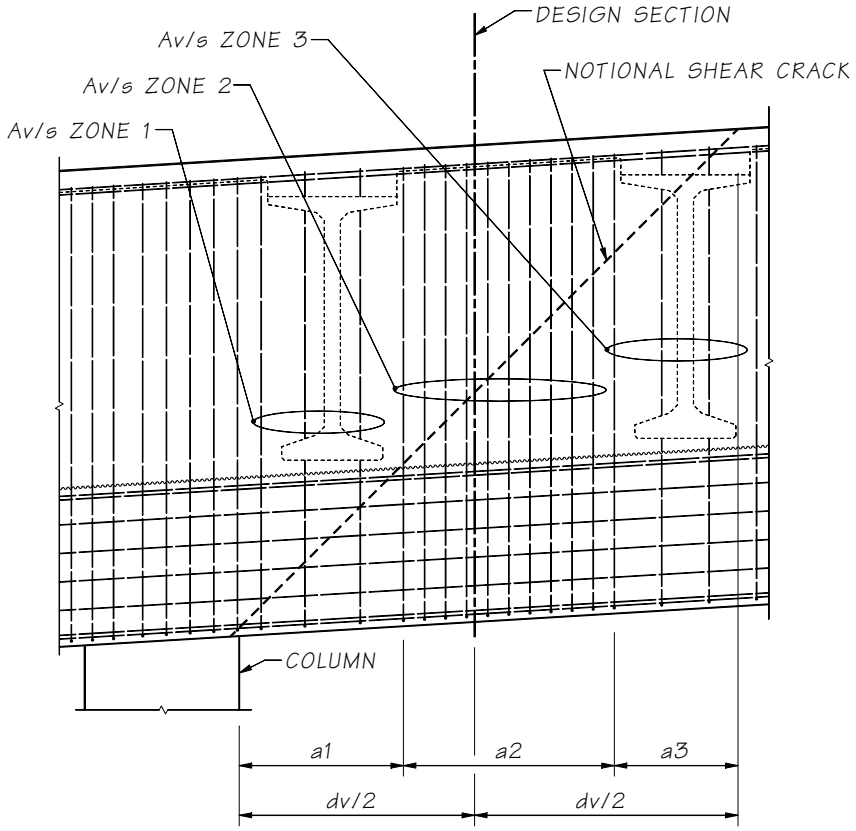

Effective Crossbeam Shear Reinforcement
Figure 7.4.1-1

4. Check minimum flexural and shear reinforcement, crack control by distribution of flexural steel, and temperature and shrinkage requirements.

C. Other Crossbeam Types

A special case of two stage integral crossbeam is the single column "hammer head" type crossbeams. A similar methodology can be employed for these crossbeams. The top flexural reinforcement in the stage I section is designed for the applicable stage I loads. In the stage II analysis, the stage I and stage II loads are applied to the full depth section and the top reinforcement in the full depth composite section shall be designed for the total stage I and II demands. The stage I top reinforcement can be considered in the stage II analysis, although it may not be very effective. The section can be considered rectangular or as a "T" section by including deck steel reinforcement within the effective width.

Although not discussed here, capacity protection of integral crossbeams will likely control the final design. The analysis should treat the full depth crossbeam as if it was cast monolithic. Various analytical methods can be utilized to obtain the demands in the crossbeam from the column plastic moment and shear, and they shall be determined by the designer.

The analysis and design for prestressed girder expansion pier crossbeams and most crossbeams for steel plate and box girder bridges is straightforward and consists of only one stage. All dead and live loads are applied directly to the crossbeam. The designer should consider conditions where torsion may be induced by unbalanced loading during the construction and/or permanent phases. The 15 psf construction load shall not be included with any vehicle live load combinations.

Load rating of the integral 2-stage crossbeams shall follow the methods described for the Stage II analysis using the applicable load rating live loads.

7.5 Abutment Design and Details

7.5.1 General

A. Abutment Types

There are five abutment types described in the following section that have been used by the Bridge and Structures Office. Conventional stub and cantilever abutments on spread footings, piles, or shafts are the preferred abutment type for WSDOT bridges. The representative types are intended for guidance only and may be varied to suit the requirements of the bridge being designed.

Significant measures may be required to accommodate bridge security and deter inappropriate access to the bridge abutment areas. Designs may include steel security fences or concrete curtain walls. Configuring the land form at the abutment or increasing the stem wall height to deter access may also be considered. Where required, coordinate with the State Bridge and Structures Architect during final design.

1. Stub Abutments

Stub abutments are short abutments where the distance from the girder seat to top of footing is less than approximately 4 feet, see Figure 7.5.1-1. The footing and wall can be considered as a continuous inverted T-beam. The analysis of this type abutment shall include investigation into both bending and shear stresses parallel to centerline of bearing. If the superstructure is relatively deep, earth pressure combined with longitudinal forces from the superstructure may become significant.

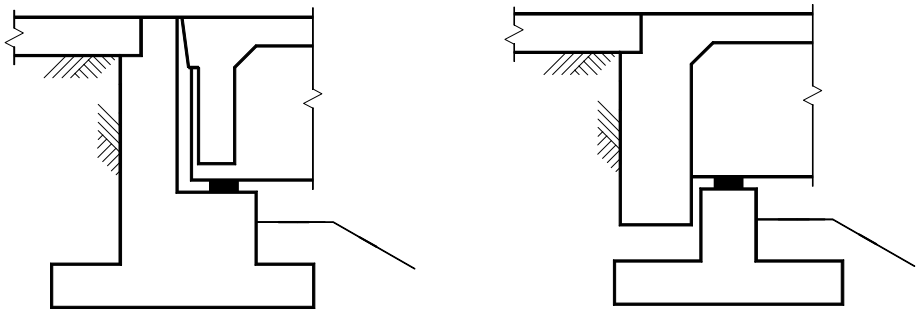

Stub "L" Abutment Stub Abutment

Figure 7.5.1-1

2. Cantilever Abutments

If the height of the wall from the bearing seat down to the bottom of the footing exceeds the clear distance between the girder bearings, the assumed 45° lines of influence from the girder reactions will overlap, and the dead load and live load from the superstructure can be assumed equally distributed over the abutment width. The design may then be carried out on a per-foot basis. The primary structural action takes place normal to the abutment, and the bending moment effect parallel to the abutment may be neglected in most cases. The wall is assumed to be a cantilever member fixed at the top of the footing and subjected to axial, shear, and bending loads see Figure 7.5.1-2.

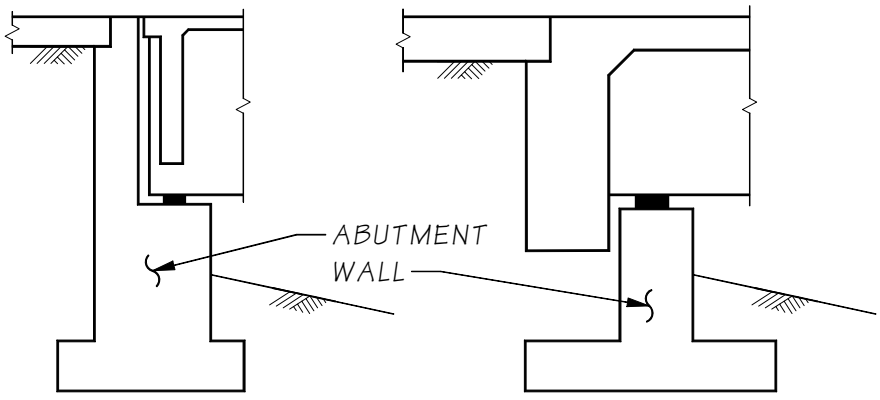

Figure 7.5.1-2

3. Spill-Through Abutments

The analysis of this type of abutment is similar to that of an intermediate pier, see Figure 7.5.1-3. The crossbeam shall be investigated for vertical loading as well as earth pressure and longitudinal effects transmitted from the superstructure. Columns shall be investigated for vertical loads combined with horizontal forces acting transversely and longitudinally. For earth pressure acting on rectangular columns, assume an effective column width equal to 1.5 times the actual column width. Short, stiff columns may require a hinge at the top or bottom to relieve excessive longitudinal moments.

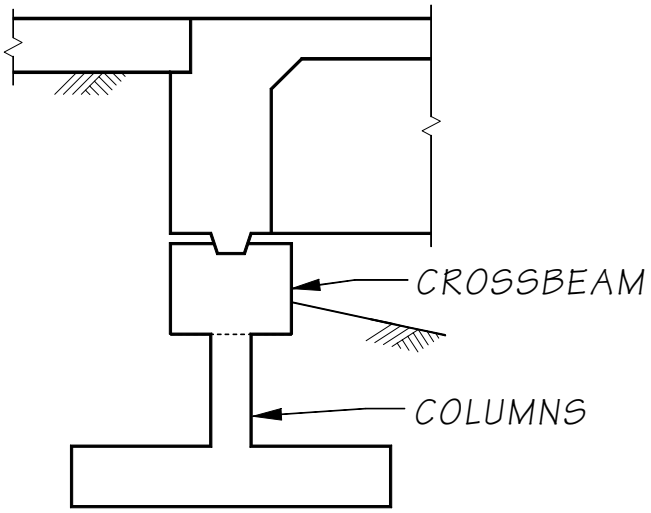

Figure 7.5.1-3

4. Rigid Frame Abutments

Abutments that are part of a rigid frame are generically shown in Figure 7.5.1-4. At-Rest earth pressures (EH) will apply to these structures. The abutment design should include the live load impact factor from the superstructure. However, impact shall not be included in the footing design. The rigid frame itself should be considered restrained against sidesway for live load only. AASHTO LRFD Chapter 12 addresses loading and analysis of rigid frames that are buried (box culverts).

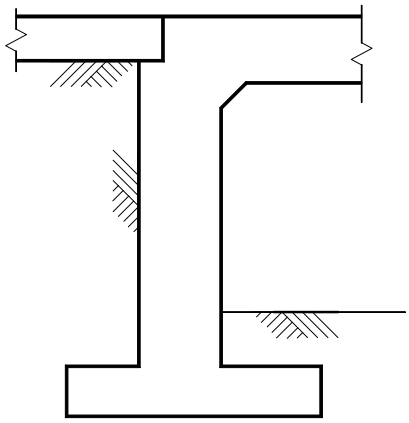

Rigid Frame Abutment
Figure 7.5.1-4

5. Bent-Type Abutments

An abutment that includes a bent cap supported on columns or extended piles or shafts is shown in Figure 7.5.1-5. For structural reasons it may be required to construct a complete wall behind a bridge abutment prior to bridge construction. Bent-type abutments may be used where the abutment requires protection from lateral and vertical loads and settlement. This configuration shall only be used with the approval of the WSDOT Bridge Design Engineer. It shall not be used where initial construction cost is the only determining incentive.

A bridge approach slab shall span a maximum of 6′-0″ between the back of pavement seat and the face of the approach embankment wall. The approach slab shall be designed as a beam pinned at the back of pavement seat. The approach slab shall support traffic live loads and traffic barrier reactions. The approach embankment wall shall support the vertical live load surcharge. The approach slab shall not transfer loads to the approach embankment wall facing.

An enclosing fascia wall is required to prohibit unwanted access with associated public health, maintenance staff safety, and law enforcement problems. The design shall include a concrete fascia enclosing the columns and void. The fascia shall have bridge inspection access. The access door shall be a minimum 3′-6″ square with the sill located 2′-6″ above finished grade. Contact the State Bridge and Structures Architect for configuration and concrete surface treatments.

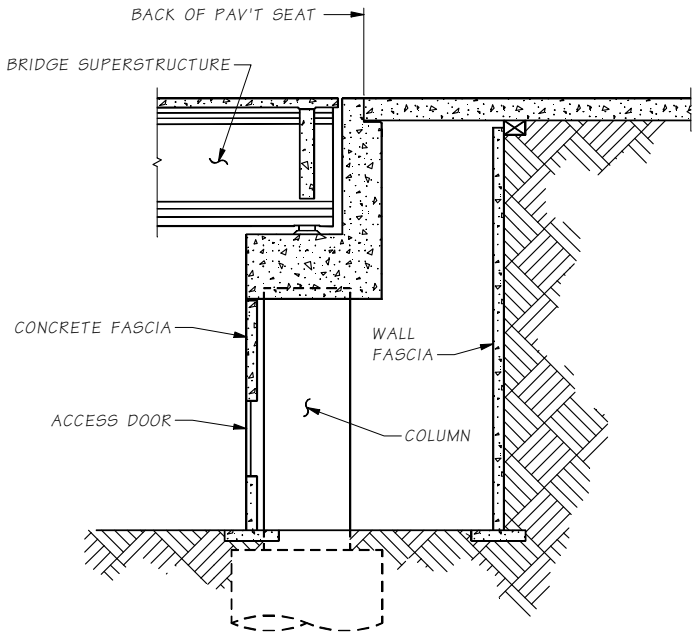

Bent-Type Abutment
Figure 7.5.1-5

6. Abutments Supported by Mechanically Stabilized Earth Walls

Bridge abutments may be supported on mechanically-stabilized earth (MSE) walls. Refer to Section 7.5.11 for specific requirements.

7.5.2 Embankment at Abutments

The minimum clearances for the embankment at the front face of abutments shall be as indicated on Standard Plans A-50.10.00 through A-50.40.00. At the ends of the abutment, the fill may be contained with wing walls or in the case of concrete structures, placed against the exterior girders.

The minimum clearance between the bottom of the superstructure and the embankment below shall be 3'-0" for girder bridges and 5'-0" for non-girder, slab, and box girder bridges.

The presence of a horizontal landform shelf beneath the superstructure at the abutment face may constitute an attractive nuisance. Limiting access to superstructure, by increasing the stem wall height, may also be required. Where required, coordinate with the State Bridge and Structures Architect for bridge security issues.

7.5.3 Abutment Loading

In general, bridge abutment loading shall be in accordance with AASHTO LRFD Chapter 3 and 11. The following simplifications and assumptions may be applied to the abutment design. See Section 7.7.4 for a force diagram of typical loads as they are applied to an abutment spread footing.

A. Dead Load - DC

Approach slab dead load reaction taken as 2 kips/foot of wall applied at the pavement seat.

B. Live Load - LL

Live load impact does not apply to the abutment. For bridge approach slab live load assumptions, see Section 10.6. If bridge approach slabs are not to be constructed in the project (e.g. bride approach slab details are not included in the bridge sheets of the Plans) a live load surcharge (LS) applies.

C. Earth Pressure - EH, EV

Active earth pressure (EH) and the unit weight of backfill on the heel and toe (EV) will be provided in a geotechnical report. The toe fill shall be included in the analysis for overturning if it adds to overturning.

Passive earth pressure resistance (EH) in front of a footing may not be dependable due to potential for erosion, scour, or future excavation. Passive earth pressure may be considered for stability at the strength limit state only below the depth that is not likely to be disturbed over the structure's life. The Geotechnical Branch should be contacted to determine if passive resistance may be considered. The top two feet of passive earth pressure should be ignored.

D. Earthquake Load - EQ

Seismic superstructure loads shall be transmitted to the substructure through bearings, girder stops or restrainers. As an alternative, the superstructure may be rigidly attached to the substructure. The Extreme Event I load factor for all EQ induced loads shall be 1.0.

For bearing pressure and wall stability checks, the seismic inertial force of the abutment, P_{IR}, shall be combined with the seismic lateral earth pressure force, P_{AE}, as described in AASHTO LRFD Section 11.6.5.1.

For structural design of the abutment, the seismic inertial force, P_{IR}, shall be combined with the seismic lateral earth pressure force, P_{AE}, as described in AASHTO LRFD Section 11.6.5.1 for stability checks. The inertial force shall include the inertia of the concrete, but need not include the inertia of the soil above the heel.

E. Bearing Forces - TU

For strength design, the bearing shear forces shall be based on ½ of the annual temperature range. This force is applied in the direction that causes the worst case loading.

For extreme event load cases, calculate the maximum friction force (when the bearing slips) and apply in the direction that causes the worst case loading.

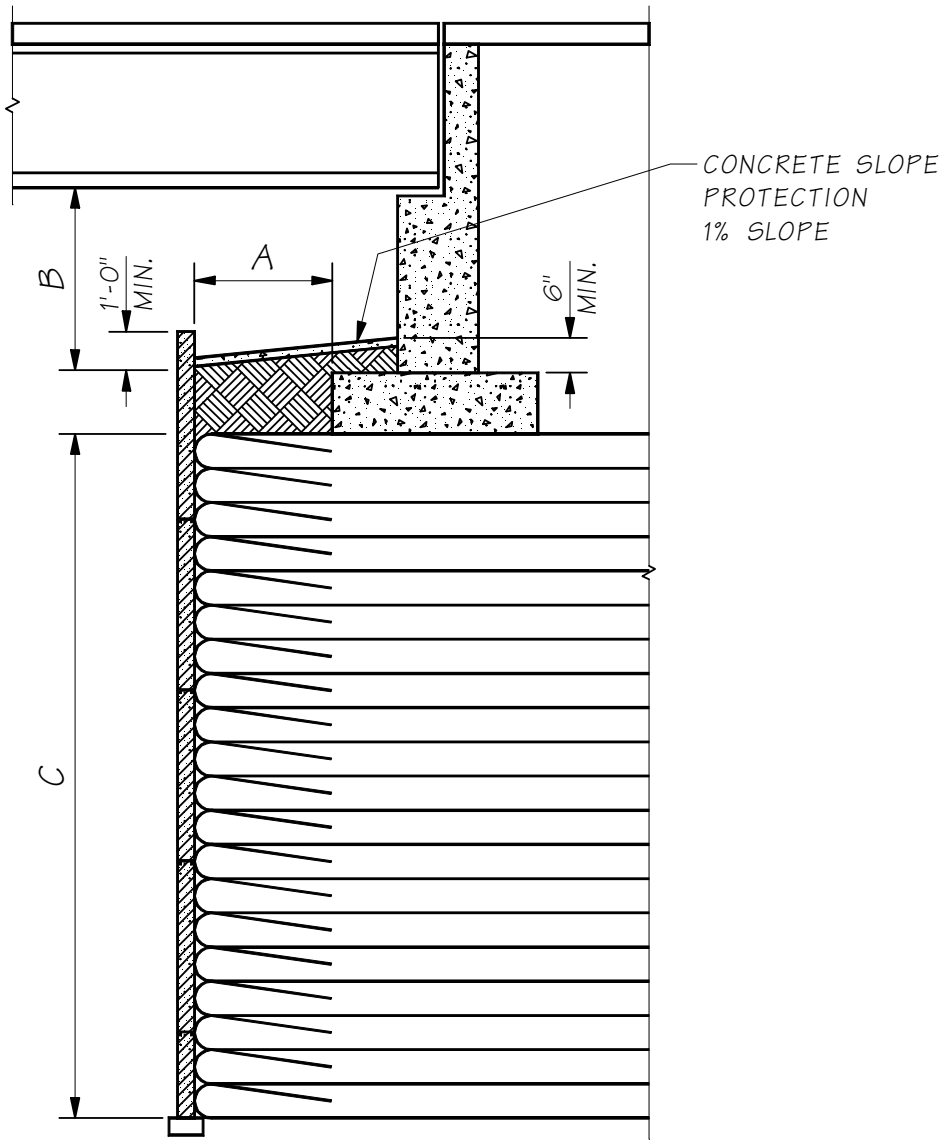

A. 4'-0" MIN. FOR SE WALLS (PRECAST CONCRETE PANEL FACE OR CAST-IN-PLACE CONCRETE FACE) AND 2'-0" MIN. FOR SPECIAL DESIGNED GEOSYNTHETIC RETAINING WALLS WITH WRAPPED FACE.

B. 3'-0" MIN. FOR GIRDER BRIDGES AND 5'-0" MIN. FOR NON-GIRDER, SLAB, AND BOX GIRDER BRIDGES.

C. 30'-0" MAXIMUM

Abutment on SE Wall or Geosynthetic Wall
Figure 7.5.2-1

7.5.4 Temporary Construction Load Cases

A. Superstructure Built after Backfill at Abutment

If the superstructure is to be built after the backfill is placed at the abutments, the resulting temporary loading would be the maximum horizontal force with the minimum vertical force. During the abutment design, a load case shall be considered to check the stability and sliding of abutments after placing backfill but prior to superstructure placement. This load case is intended as a check for a temporary construction stage, and not meant to be a controlling load case that would govern the final design of the abutment and footing. This loading will generally determine the tensile reinforcement in the top of the footing heel.

If this load case check is found to be satisfactory, a note shall be added to the general notes in the contract plans and the contractor will not be required to make a submittal requesting approval for early backfill placement. This load case shall include a 2′-0″ deep soil surcharge for the backfill placement equipment (LS) as covered by the *Standard Specifications* Section 2-03.3(14)I.

B. Wing Wall Overturning

It is usually advantageous in sizing the footing to release the falsework from under the wing walls after some portion of the superstructure load is applied to the abutment. A note can cover this item, when applicable, in the sequence of construction on the plans.

7.5.5 Abutment Bearings and Girder Stops

All structures shall be provided with some means of restraint against lateral displacement at the abutments due to temperature, shrinkage, wind, earth pressure, and earthquake loads, etc. Such restraints may be in the form of concrete girder stops with vertical elastomeric pads, concrete hinges, or bearings restrained against movement.

All prestressed girder bridges in Western Washington (within and west of the Cascade mountain range) shall have girder stops between all girders at abutments and intermediate expansion piers. This policy is based on fact that the February 28, 2001 Nisqually earthquake caused significant damage to girder stops at bridges where girder stops were not provided between all girders. In cases where girder stops were cast prior to placement of girders and the 3″ grout pads were placed after setting the girders, the 3″ grout pads were severely damaged and displaced from their original position.

A. Abutment Bearings

Longitudinal forces from the superstructure are normally transferred to the abutments through the bearings. The calculated longitudinal movement shall be used to determine the shear force developed by the bearing pads. The shear modulus of Neoprene at 70°F (21°C) shall be used for determining the shear force. However, the force transmitted through a bearing pad shall be limited to that which causes the bearing pad to slip. Normally, the maximum percentage of the vertical load reaction transferred in shear is assumed to be 6 percent for PTFE sliding bearings and 20 percent for elastomeric bearing pads. For semi-integral abutments, the horizontal earth pressure acting on the end diaphragm is transferred through the bearings.

When the force transmitted through the bearing pads is very large, the designer should consider increasing the bearing pad thickness, using PTFE sliding bearings and/or utilizing the flexibility of the abutment as a means of reducing the horizontal design force. When the flexibility of the abutment is considered, it is intended that a simple approximation of the abutment deformation be made.

For semi-integral abutments with overhanging end diaphragms at the Extreme Event, the designer shall consider that longitudinal force may be transmitted through the end diaphragm. If the gap provided is less than the longitudinal displacement demand, assume the end diaphragm is in contact with abutment wall. In this case, the bearing force shall not be added to seismic earth pressure force.

B. Bearing Seats

The bearing seats shall be wide enough to accommodate the size of the bearings used with a minimum edge dimension of 3″ and satisfy the requirements of AASHTO LRFD Section 4.7.4.4. On L abutments, the bearing seat shall be sloped away from the bearings to prevent ponding at the bearings. The superelevation and profile grade of the structure should be considered for drainage protection. Normally, a ¼″ drop across the width of the bearing seat is sufficient.

C. Transverse Girder Stops

Transverse girder stops are required for all abutments in order to transfer lateral loads from the superstructure to the abutment. Abutments shall normally be considered as part of the Earthquake Resisting System (ERS). Girder stops shall be full width between girder flanges except to accommodate bearing replacement requirements as specified in Chapter 9. The girder stop shall be designed to resist loads at the Extreme Limit State for the earthquake loading, Strength loads (wind etc.) and any transverse earth pressure from skewed abutments, etc. Girder stops are designed using shear friction theory and the shear strength resistance factor shall be $\varphi_s = 0.9$. The possibility of torsion combined with horizontal shear when the load does not pass through the centroid of the girder stop shall also be investigated.

In cases where the WSDOT Bridge Design Engineer permits use of ERS #3 described in Section 4.2.2, which includes a fusing mechanism between the superstructure and substructure, the following requirements shall be followed:

- The abutment shall not be included in the ERS system, the girder stops shall be designed to fuse, and the shear strength resistance factor shall be $\varphi_s = 1.0$.
- If a girder stop fusing mechanism is used on a pile supported abutment, the combined overstrength resistance of the girder stops per AASHTO Seismic Section 4.14 shall be less than the combined plastic shear resistance of the piles.

The detail shown in Figure 7.5.5-1 may be used for prestressed girder bridges. Prestressed girders shall be placed in their final position before girder stops are cast to eliminate alignment conflicts between the girders and girder stops. Elastomeric girder stop pads shall run the full length of the girder stop. All girder stops shall provide ⅛″ clearance between the prestressed girder flange and the elastomeric girder stop pad.

For skewed bridges with semi-integral or end type A diaphragms, the designer shall evaluate the effects of earth pressure forces on the elastomeric girder stop pads. These pads transfer the skew component of the earth pressure to the abutment without restricting the movement of the superstructure in the direction parallel to centerline. The performance of elastomeric girder stop pads shall be investigated at Service Limit State. In some cases bearing assemblies containing sliding surfaces may be necessary to accommodate large superstructure movements.

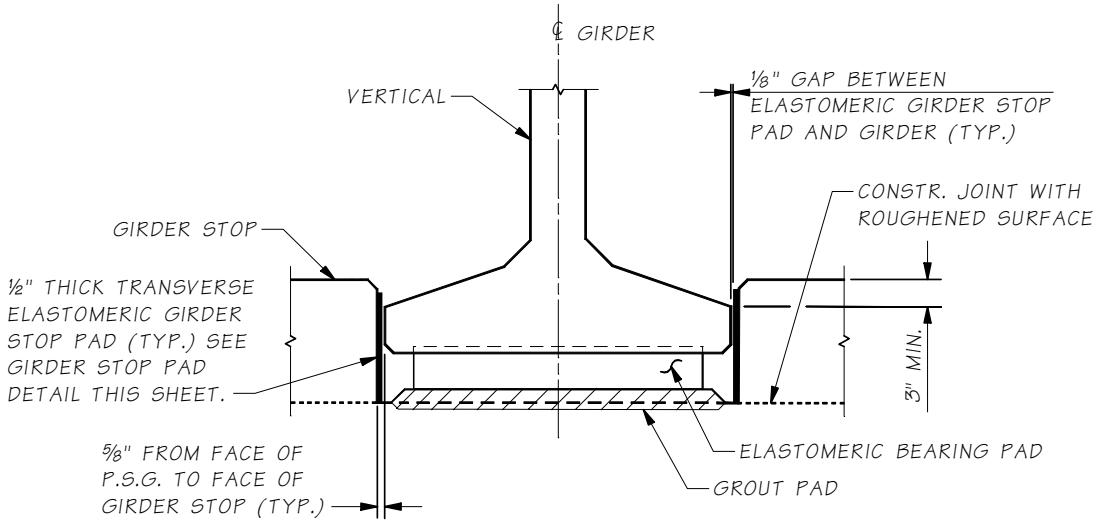

GIRDER STOP DETAIL

NOTE:
1. GIRDER STOPS SHALL BE CONSTRUCTED AFTER PLACEMENT OF PRESTRESSED GIRDERS.
2. TRANSVERSE ELASTOMERIC GIRDER STOP PADS BETWEEN GIRDER AND GIRDER STOPS SHALL BE PLACED AFTER CONSTRUCTING THE GIRDER STOPS. THE PADS SHALL BE BONDED TO GIRDER STOPS WITH APPROVED ADHESIVE.

Girder Stop Details
Figure 7.5.5-1

7.5.6 Abutment Expansion Joints

The compressibility of abutment expansion joints shall be considered in the design of the abutment when temperature, shrinkage, and earthquake forces may increase the design load. For structures without abutment expansion joints, the earth pressure against the end diaphragm is transmitted through the superstructure.

7.5.7 Open Joint Details

Vertical expansion joints extending from the top of footings to the top of the abutment are usually required between abutments and adjacent retaining walls to handle anticipated movements. The expansion joint is normally filled with premolded joint filler which is not water tight. There may be circumstances when this joint must be water tight; ⅛ butyl rubber may be used to cover the joint. The open joint in the barrier shall contain a compression seal to create a watertight joint. Figure 7.5.7-1 shows typical details that may be used. Aesthetic considerations may require that vertical expansion joints between abutments and retaining walls be omitted. This is generally possible if the retaining wall is less than 60 feet long.

The footing beneath the joint may be monolithic or cast with a construction joint. In addition, dowel bars may be located across the footing joint parallel to the wall elements to guard against differential settlement or deflection.

On semi-integral abutments with overhanging end diaphragms, the open joints must be protected from the fill spilling through the joint. Normally butyl rubber is used to seal the openings. See the end diaphragm details in the Appendices of Chapter 5 for details.

7.5.8 Construction Joints

Construction joints should be provided between the footings/caps and stems of abutments. Shear keys shall be provided at construction joints between the footing and the stem, at vertical construction joints and at any construction joint that requires shear transfer. To simplify construction, vertical construction joints are often necessary, particularly between the abutment and adjacent wing walls. The *Standard Specifications* cover the size and placement of shear keys. The location of such joints shall be detailed on the plans. Construction joints with roughened surface can be used at locations with horizontal joints. These should be shown on the plans and labeled *"Construction Joint With Roughened Surface."* When construction joints are shown in the Plans for the convenience of the Contractor and are not structurally required, they shall be indicated as optional. When construction joints are located within the face of the abutment wall, a pour strip or an architectural reveal should be used for a clean appearance. Details should be shown in the plans.

7.5.9 Abutment Wall Design

When the primary structural action is parallel to the superstructure or normal to the abutment face, the wall shall be treated as a column subjected to combined axial load and bending moment. Compressive reinforcement need not be included in the design of cantilever walls, but the possibility of bending moment in the direction of the span as well as towards the backfill shall be considered. A portion of the vertical bars may be cut off where they are no longer needed for stress.

A. General

In general, horizontal reinforcement should be placed outside of vertical reinforcement to facilitate easier placement of reinforcement.

B. Temperature and Shrinkage Reinforcement

AASHTO LRFD Section 5.10.8 shall be followed for providing the minimum temperature and shrinkage steel near surfaces of concrete exposed to daily temperature changes and in structural mass concrete. On abutments that are longer than 60′, consideration should be given to have vertical construction joints to minimize shrinkage cracks.

C. Cross Ties

The minimum cross tie reinforcement in abutment walls, except stub abutments, shall be #4 tie bars with 135° hooks, spaced at approximately 2′-0″ maximum center-to-center vertically and horizontally, see Figure 7.5.9-1.

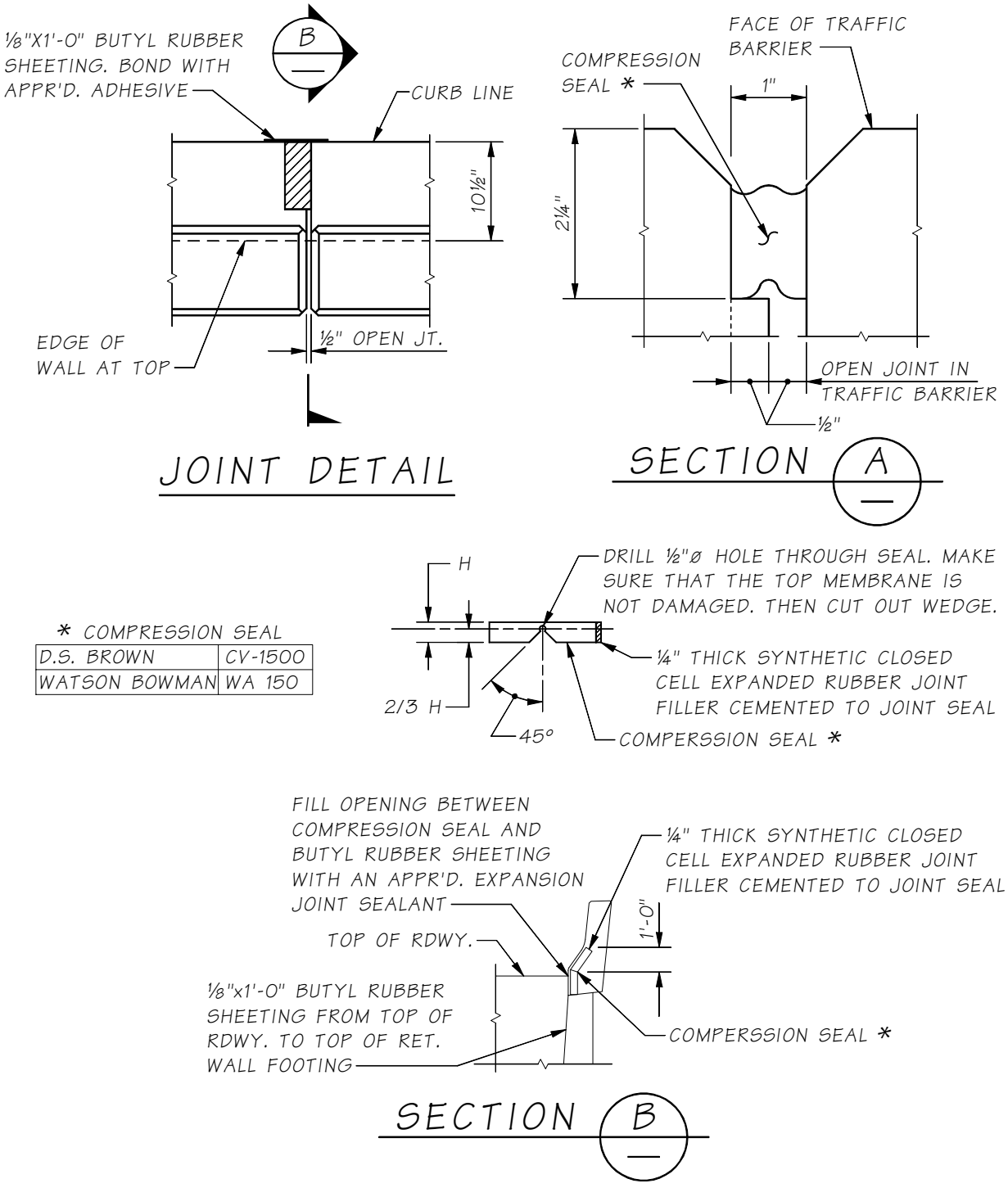

Open Joint Details Between Abutment and Retaining Walls
Figure 7.5.7-1

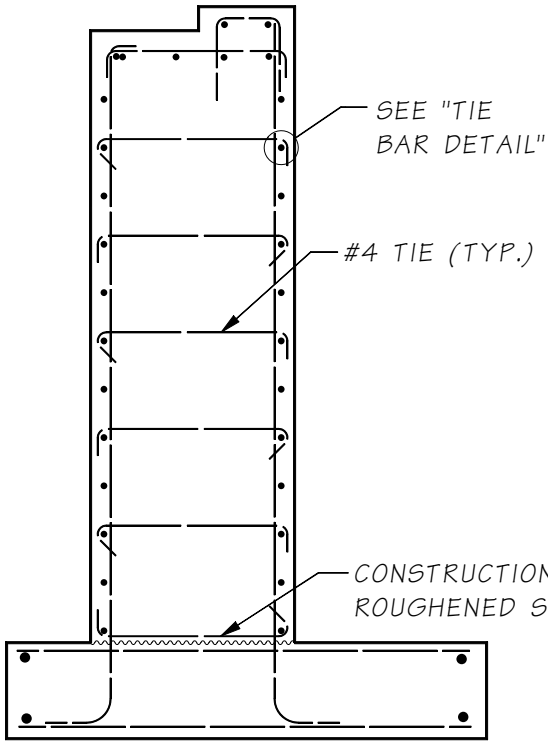

TYPICAL SECTION

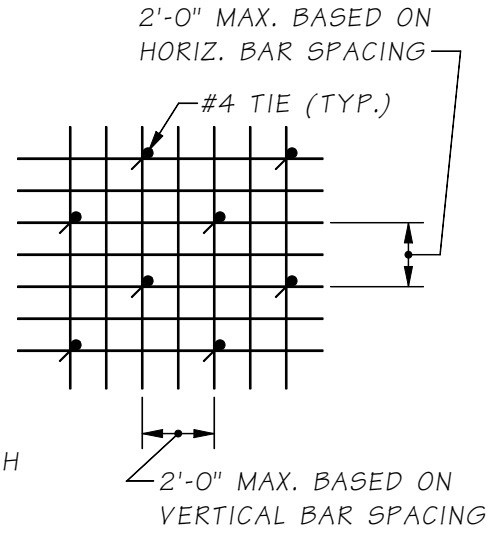

TIE BAR SPACING DETAIL

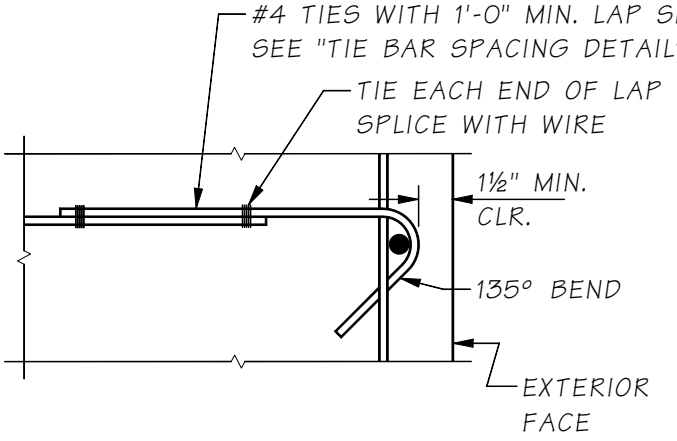

ALTERNATE TIE BAR DETAIL

CONSTANT OR VARIABLE WIDTH SECTION

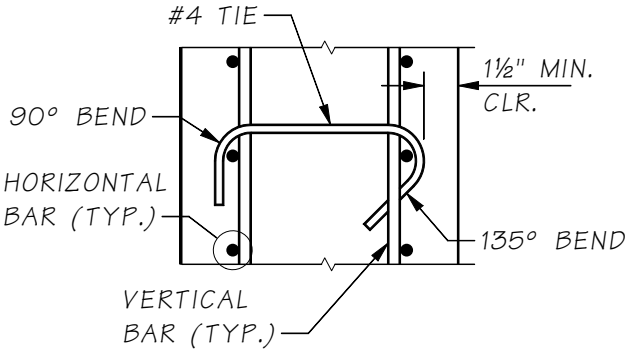

TIE BAR DETAIL

CONSTANT WIDTH SECTION

Cross Tie Details
Figure 7.5.9-1

7.5.10 Drainage and Backfilling

3″ diameter weep holes shall be provided in all bridge abutment walls. These shall be located 6″ above the finish ground line at about 12′ on center. In cases where the vertical distance between the top of the footing and the finish groundline is greater than 10′, additional weep holes shall be provided 6″ above the top of the footing. No weep holes are necessary in cantilever wing walls where a wall footing is not used.

The details for gravel backfill for wall, underdrain pipe and backfill for drain shall be indicated on the plans. The gravel backfill for wall shall be provided behind all bridge abutments. The underdrain pipe and gravel backfill for drain shall be provided behind all bridge abutments except abutments on fills with a stem wall height of 5′ or less. When retaining walls with footings are attached to the abutment, a blockout may be required for the underdrain pipe outfall. Cooperation between Bridge and Structures Office and the Design PE Office as to the drainage requirements is needed to guarantee proper blockout locations.

Underdrain pipe and gravel backfill for drain are not necessary behind cantilever wing walls. A 3′ thickness of gravel backfill for wall behind the cantilever wing walls shall be shown in the plans.

The backfill for wall, underdrain pipe and gravel backfill for drain are not included in bridge quantities, the size of the underdrain pipe should not be shown on the bridge plans, as this is a Design PE Office design item and is subject to change during the design phase. Figure 7.5.10-1 illustrates backfill details.

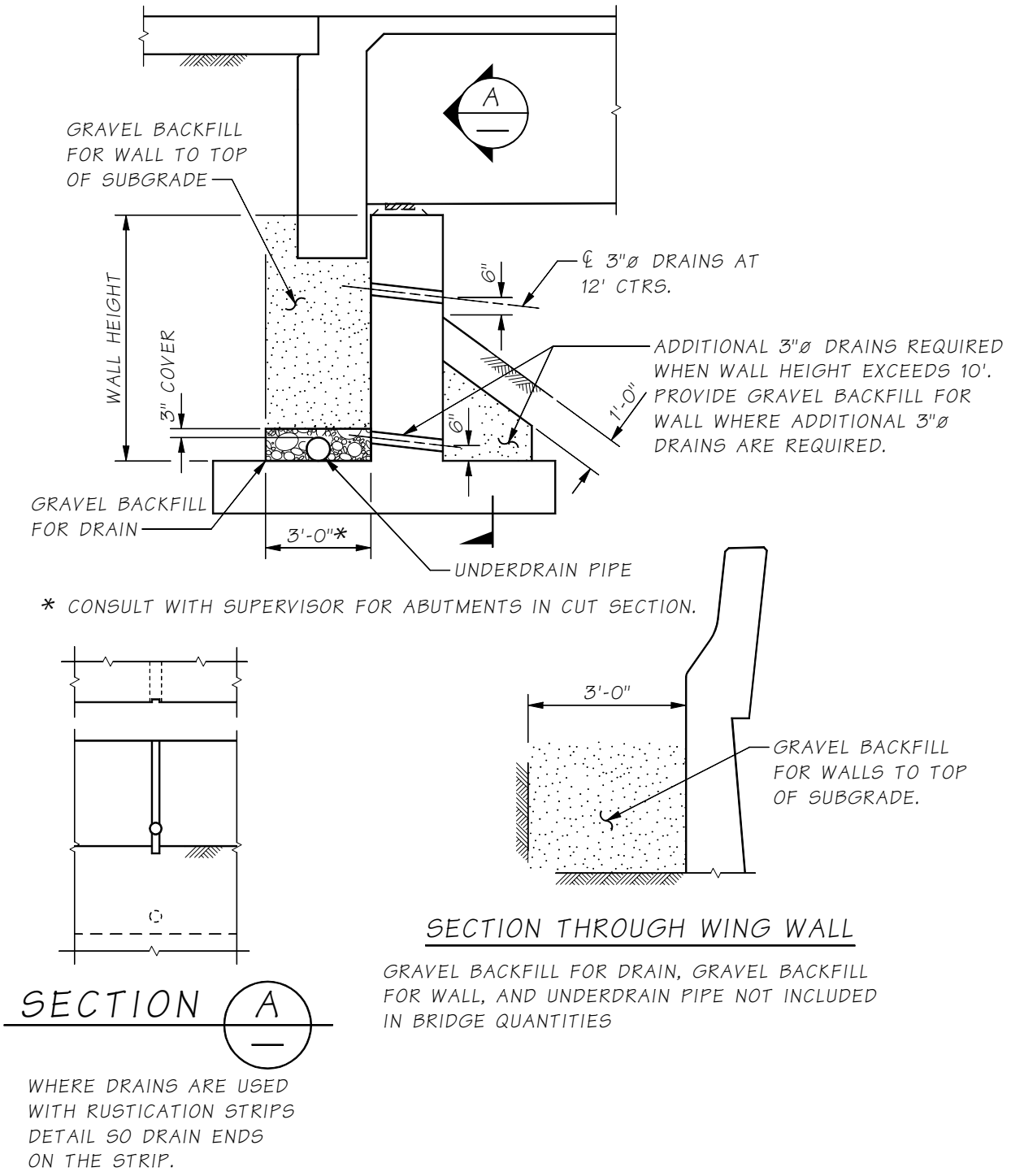

Drainage and Backfill Details
Figure 7.5.10-1

7.5.11 Abutments Supported By Mechanically-Stabilized Earth Walls

Bridge abutments may be supported on mechanically-stabilize earth (MSE) walls, including geosynthetic retaining walls (with and without structural facing), structural earth walls and reinforced soil. Abutments supported on these walls shall be designed in accordance with the requirements of this manual and the following documents (listed in order of importance):

1. *Geotechnical Design Manual* Section 15.5.3.5.
2. AASHTO LRFD.
3. Design and Construction of Mechanically Stabilized Earth Walls and Reinforced Soil Slopes, Volume I and II, FHWA-NHI-10-024, FHWA-NHI-10-025.

Bridges with MSE supported abutments shall be designed as one of two types described below, and shall satisfy the associated design requirements.

A. Single-span bridges with precast slab superstructures supported directly on reinforced soil

These bridges shall conform to the following requirements:

1. Walls supporting abutments shall be special designed wall systems, and shall be one of two types:
   a. Geosynthetic walls with a stacked dry-cast modular concrete block facing. The top 3 rows of dry-cast modular concrete blocks shall be grouted with #4 rebar. See Figure 7.5.11-1
   b. Geosynthetic and structural earth walls with full-height concrete facing. See Figure 7.5.11-2
2. The span length shall not exceed 60 feet.
3. The superstructure shall include a 5″ thick C.I.P. composite topping.
4. The end of the precast superstructure shall be at least 4 feet from the back face of the MSE wall. Minimum seat width requirements shall be provided on the reinforced soil bearing area.
5. A foam board detail shall be used to create a 1 feet horizontal buffer between the bearing area and the wall facing.
6. The vertical gap between the top of wall facing and the bottom of superstructure shall be 4″ or 2 percent of the abutment height, whichever is greater.
7. Prestressing strands in the zone bearing on reinforced soil shall have a minimum concrete cover of 2″. Transverse reinforcing steel within this zone shall have a minimum concrete cover of 1½″. All prestressing strand shall be removed to a 2″ depth from the end of the slab. The voids shall be patched with epoxy grout.
8. Where voided slab superstructures are used, the slab section shall be solid from the end of the slab to at least 1 feet in front of the fascia.

9. The abutment shall be designed for a bearing pressure at service loads not to exceed 2.0 TSF and a factored load at strength and extreme limit states not to exceed 3.5 TSF. The bearing pressure may be increased to 3.0 TSF at service loads and 4.5 TSF at strength and extreme limit states if a vertical settlement monitoring program is conducted in accordance with WSDOT GDM Section 15.5.3.5.
10. Bridge approach slabs may be omitted.

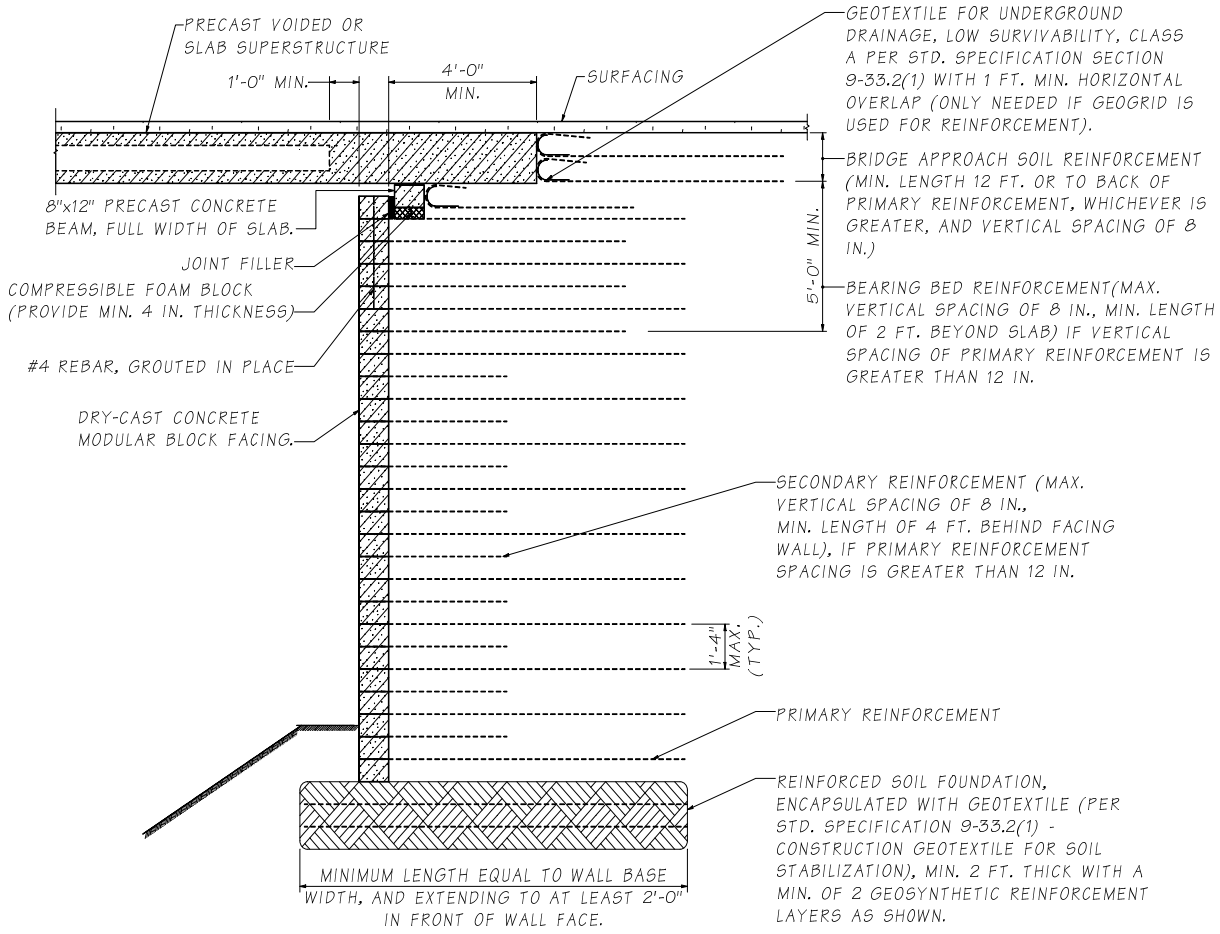

Reinforced Soil Abutment with Dry-Cast Modular Block Facing
Figure 7.5.11-1

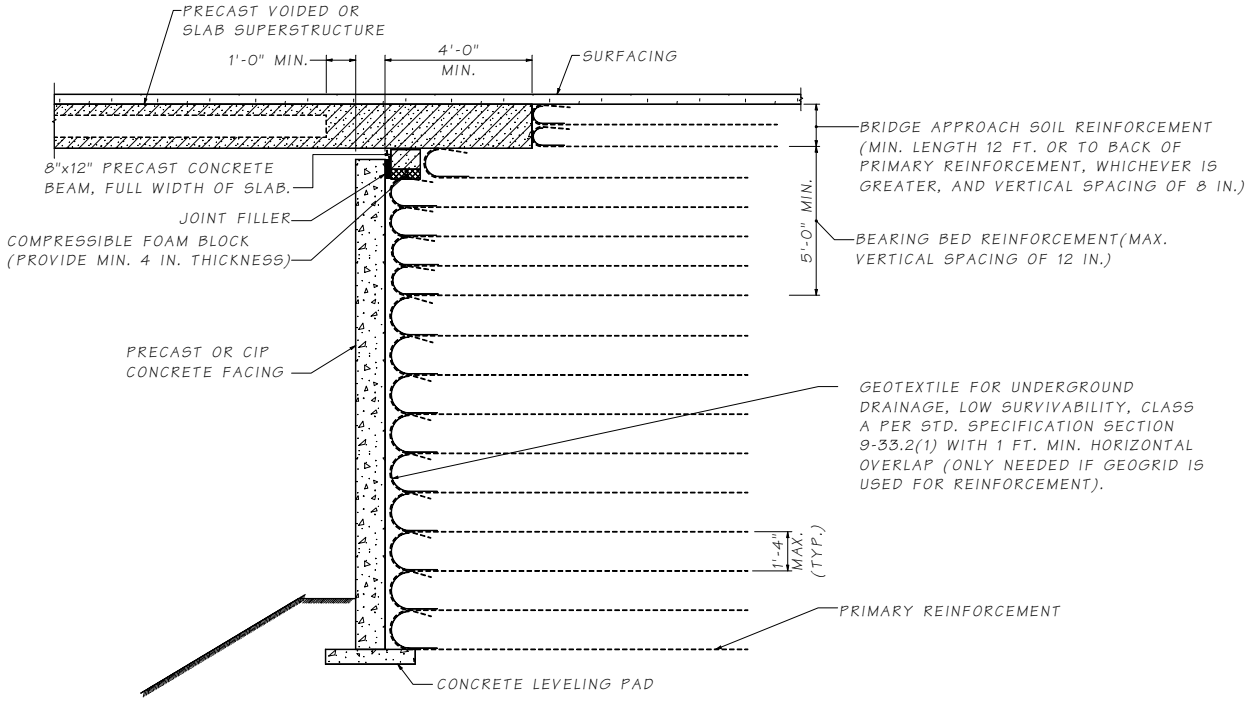

Reinforced Soil Abutment with Full-Height Concrete Facing
Figure 7.5.11-2

B. Bridges with spread footing abutments supported by a geosynthetic wall or SE wall

These bridges shall conform to the following requirements, see Figure 7.5.11-3:

1. Walls shall be 30 feet or less in total height, which includes the retained soil height up to the bottom of the embedded spread footing.
2. For SE walls, the front edge of the bridge footing shall be placed 4 feet minimum from the back face of the fascia panel. For geosynthetic retaining walls with a wrapped face, the front edge of the bridge footing shall be placed 2 feet minimum from the back face of the fascia panel.
3. The abutment footing shall be covered by at least 6 inch of soil for frost protection.
4. The superstructure of continuous span bridges shall be designed for differential settlement between piers.
5. Abutment spread footings shall be designed for bearing pressure at service loads not to exceed 2.0 TSF and factored load at strength and extreme limit states not to exceed 3.5 TSF. The bearing pressure may be increased to 3.0 TSF at service loads and 4.5 TSF at strength and extreme limit states if a vertical settlement monitoring program is conducted in accordance with the *Geotechnical Design Manual* Section 15.5.3.5.
6. Walls supporting bridge abutments shall be special designed wall systems. Walls supporting permanent bridges shall have precast or C.I.P concrete fascia panels. Walls supporting temporary bridges may use dry-cast modular concrete block or welded wire facing.
7. Concrete slope protection shall be provided. Fall protection shall be provided in accordance with *Design Manual* Chapter 730.

Deviations from the design requirements require approval from the State Bridge Design Engineer and the State Geotechnical Engineer.

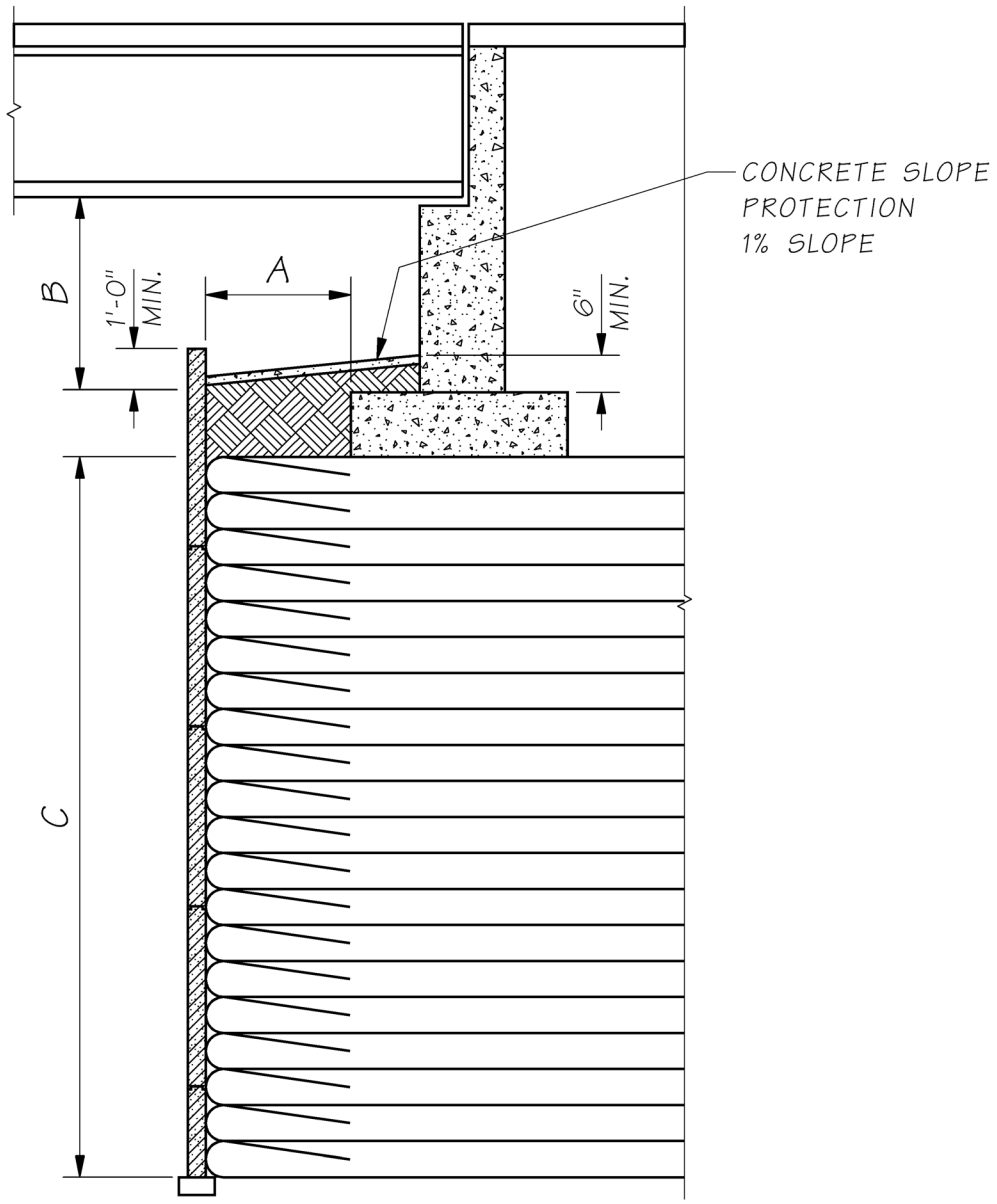

A. 4'-0" MIN. FOR SE WALLS (PRECAST CONCRETE PANEL FACE OR CAST-IN-PLACE CONCRETE FACE) AND 2'-0" MIN. FOR SPECIAL DESIGNED GEOSYNTHETIC RETAINING WALLS WITH WRAPPED FACE.

B. 3'-0" MIN. FOR GIRDER BRIDGES AND 5'-0" MIN. FOR NON-GIRDER, SLAB, AND BOX GIRDER BRIDGES.

C. 30'-0" MAXIMUM

Spread Footing on SE Wall or Geosynthetic Wall
Figure 7.5.11-3

7.6 Abutment Wing Walls and Curtain Walls

Particular attention should be given to the horizontal reinforcing steel required at fixed corners between abutment and wing/curtain walls. Since wall deflections are zero near the abutment, curtain walls and cantilever wing walls shall assume an at-rest soil pressure. This increased loading can normally be reduced to an Active soil pressure at a distance (from the corner), equal to the average height of the wall under design. At this distance, the wall deflections are assumed large enough to allow the active state soil pressures to be developed. See *Geotechnical Design Manual* Section 15.4.2.7, "Active, Passive, and At-Rest Pressures."

7.6.1 Traffic Barrier Loads

Traffic barriers shall be rigidly attached to a bridge approach slab that is cantilevered over the top of a wing/curtain wall or Structural Earth wall. The barrier collision load is applied directly to the bridge approach slab. The yield line theory as specified in AASHTO LRFD Appendix A13.3 is primarily for traffic barrier on bridge deck slabs and may not be applicable to traffic barrier on less rigid supports, such as retaining walls.

7.6.2 Wing Wall Design

The following wing wall design items should be addressed in the Plans.

A. For strength design of wing walls, vertical loads and moments may be distributed over 10′ of the abutment wall and footing.

B. Footing thickness shall be not less than 1′-6″.

C. Exterior girder top flanges should be located (at the least) inside the curb line at the end pier.

D. For skewed bridges, modify the details on the traffic barrier and approach slab sheet so the expansion joint detailing agree. List appropriate manufacturers and model numbers for the expansion joint system. Generally, a 1″ expansion joint with a 1″ open joint in the barrier is shown in the plans, unless the bridge expansion joint design dictates otherwise.

7.6.3 Wing Wall Detailing

All wing wall reinforcement should be a vertical grid and not follow a tapered bottom of wall. This allows for the steel to be placed in two layers that fits better with abutment reinforcing.

7.7 Footing Design

7.7.1 General Footing Criteria

The provisions given in this section pertain to both spread footings and pile supported footings.

A. Minimum Cover and Footing Depth

The geotechnical report may specify a minimum footing depth in order to ensure adequate bearing pressure. Stream crossings may require additional cover depth as protection against scour. The HQ Hydraulic Section shall be consulted on this matter. The end slope on the bridge approach fill is usually set at the preliminary plan stage but affects the depth of footings placed in the fill. Figure 7.7.1-1 illustrates footing criteria when setting footing elevations.

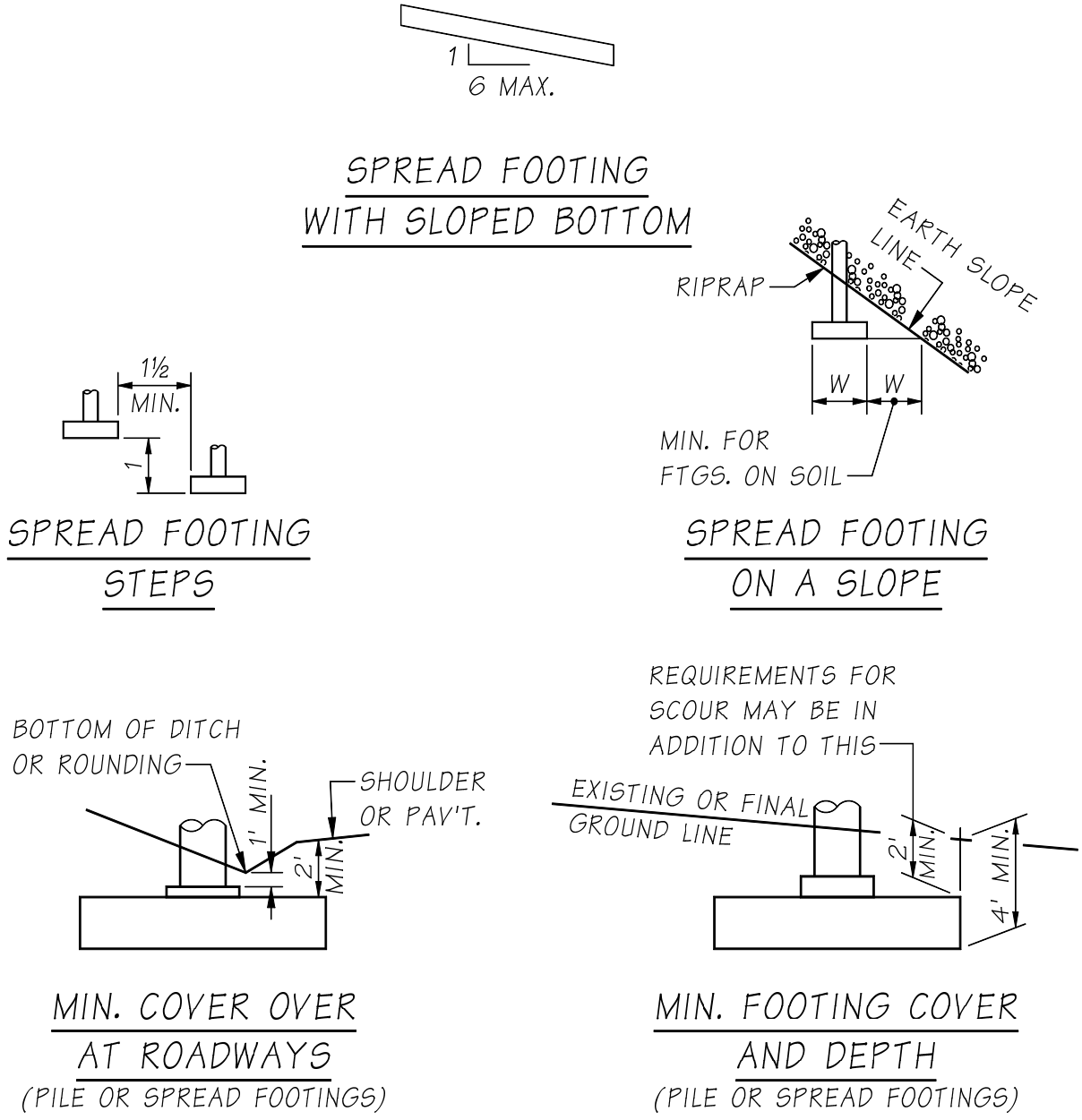

Guidelines for Footing Cover and Depth
Figure 7.7.1-1

B. Pedestals

A pedestal is sometimes used as an extension of the footing in order to provide additional depth for shear near the column. Its purpose is to provide adequate structural depth while saving concrete. For proportions of pedestals, see Figure 7.7.1-2. Since additional forming is required to construct pedestals, careful thought must be given to the tradeoff between the cost of the extra forming involved and the cost of additional footing concrete. Also, additional foundation depth may be needed for footing cover. Whenever a pedestal is used, the plans shall note that a construction joint will be permitted between the pedestal and the footing. This construction joint should be indicated as a construction joint with roughened surface.

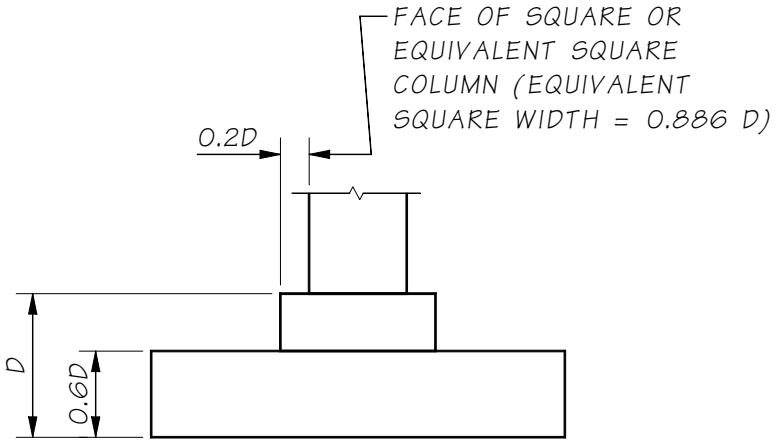

Pedestal Dimensions
Figure 7.7.1-2

7.7.2 Loads and Load Factors

The following Table 7.7.2-1 is a general application of minimum and maximum load factors as they apply to a generic footing design. Footing design must select the maximum or minimum Load Factors for various modes of failure for the Strength and Extreme Event Limit States.

The dead load includes the load due to structural components and non-structural attachments (*DC*), and the dead load of wearing surfaces and utilities (*DW*). The live load (*LL*) does not include vehicular dynamic load allowance (*IM*).

Designers are to note, if column design uses magnified moments, then footing design must use magnified column moments.

Sliding and Overturning, e_o	Bearing Stress (e_c, s_v)
$LL_{min} = 0$	LL_{max}
DC_{min}, DW_{min} for resisting forces, DC_{max}, DW_{max} for causing forces,	DC_{max}, DW_{max} for causing forces DC_{min}, DW_{min} for resisting forces
EV_{min}	EV_{max}
EH_{max}	EH_{max}
LS	LS

Load Factors
Table 7.7.2-1

7.7.3 Geotechnical Report Summary

The Geotechnical Branch will evaluate overall bridge site stability. Slope stability normally applies to steep embankments at the abutment. If stability is in question, a maximum service limit state load will be specified in the report. Bridge design will determine the maximum total service load applied to the embankment. The total load must be less than the load specified in the geotechnical report.

Based on the foundations required in the Preliminary Plan and structural information available at this stage, the Report provides the following Geotechnical Engineering results. For all design limit states, the total factored footing load must be less than the factored resistance.

A. Bearing Resistance - Service, Strength, and Extreme Event Limit States

The nominal bearing resistance (q_n) may be increased or reduced based on previous experience for the given soils. The geotechnical report will contain the following information:

- Nominal bearing resistance (q_n) for anticipated effective footing widths, which is the same for the strength and extreme event limit states.
- Service bearing resistance (q_{ser}) and amount of assumed settlement.
- Resistance factors for strength and extreme event limit states (ϕ_b).
- Embedment depth requirements or footing elevations to obtain the recommended q_n.

Spread footings supported on SE walls or geosynthetic walls shall be designed with nominal bearing resistances not to exceed 6.0 ksf at service limit states and 9.0 ksf at strength and extreme event limit states. A vertical settlement monitoring program shall be conducted where nominal bearing resistance exceeds 4.0 ksf at service limit states or 7.0 ksf at strength or extreme event limit states. See GDM Section 15.5.3.5 for additional requirements.

B. Sliding Resistance - Strength and Extreme Event Limit States

The geotechnical report will contain the following information to determine earth loads and the factored sliding resistance ($R_R = \phi R_n$)

- Resistance factors for strength and extreme event limit states (ϕ_τ, ϕ_{ep})
- If passive earth pressure (R_{ep}) is reliably mobilized on a footing: ϕ_f or S_u and σ'_v, and the depth of soil in front of footing that may be considered to provide passive resistance.

C. Foundation Springs - Extreme Event Limit States

When a structural evaluation of soil response is required for a bridge analysis, the Geotechnical Branch will determine foundation soil/rock shear modulus and Poisson's ratio (G and μ). These values will typically be determined for shear strain levels of 2 to 0.2 percent, which are typical strain levels for large magnitude earthquakes.

7.7.4 Spread Footing Design

The following section is oriented toward abutment spread footing design. Spread footing designs for intermediate piers or other applications use the same concepts with the appropriate structural analysis. Structural designers should complete all design checks before consulting with the Geotechnical Engineer about any design problem. There may be several problem criteria that should be addressed in the solution.

A. Abutment Spread Footing Force Diagram

Figures 7.7.4-1 and 7.7.4-2 diagram the forces that act on abutment footings. Each limit state design check will require calculation of a reaction (R) and the location (X_o) or eccentricity (e_o). The ultimate soil passive resistance (Q_{ep}) at the toe is determined by the Geotechnical Engineer and is project specific.

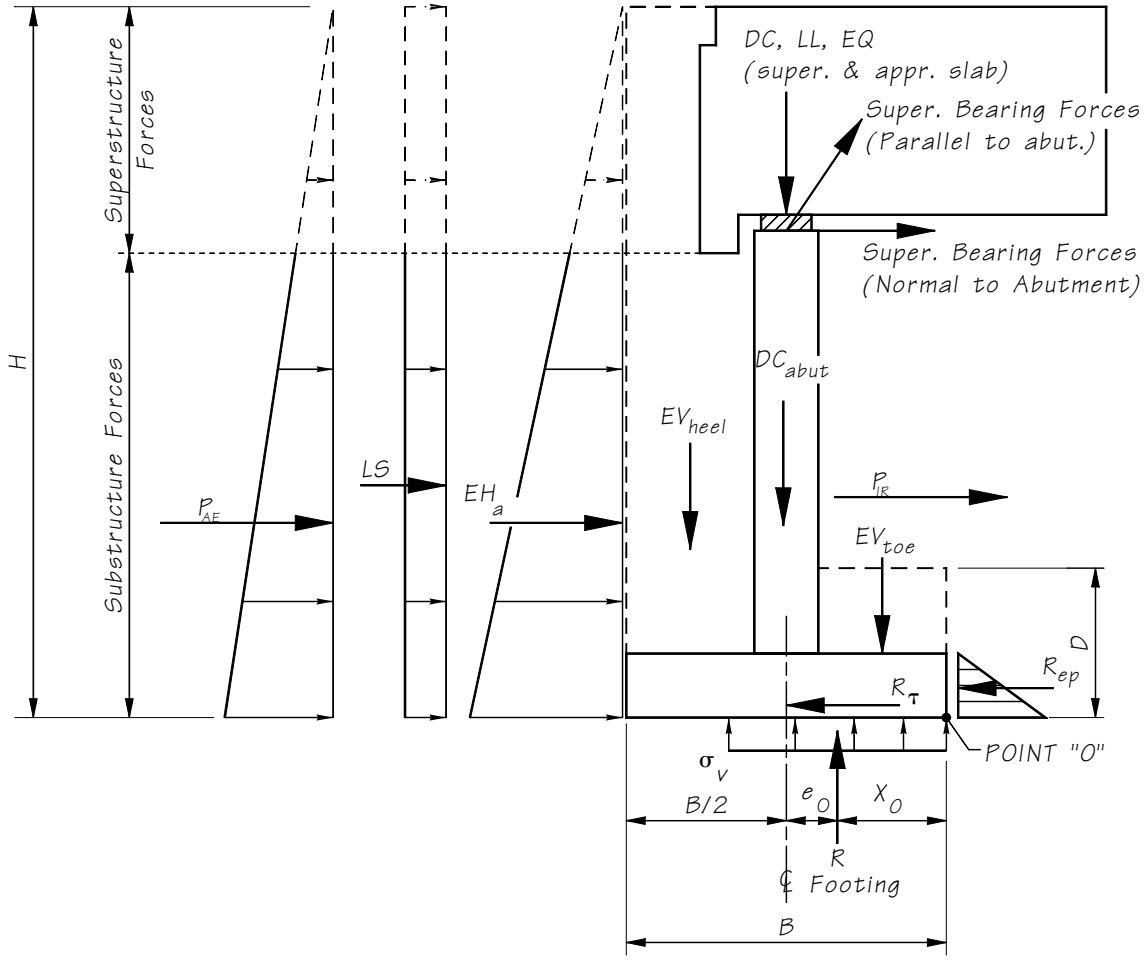

Cantilever (End Diaphragm) Abutment Force Diagram
Figure 7.7.4-1

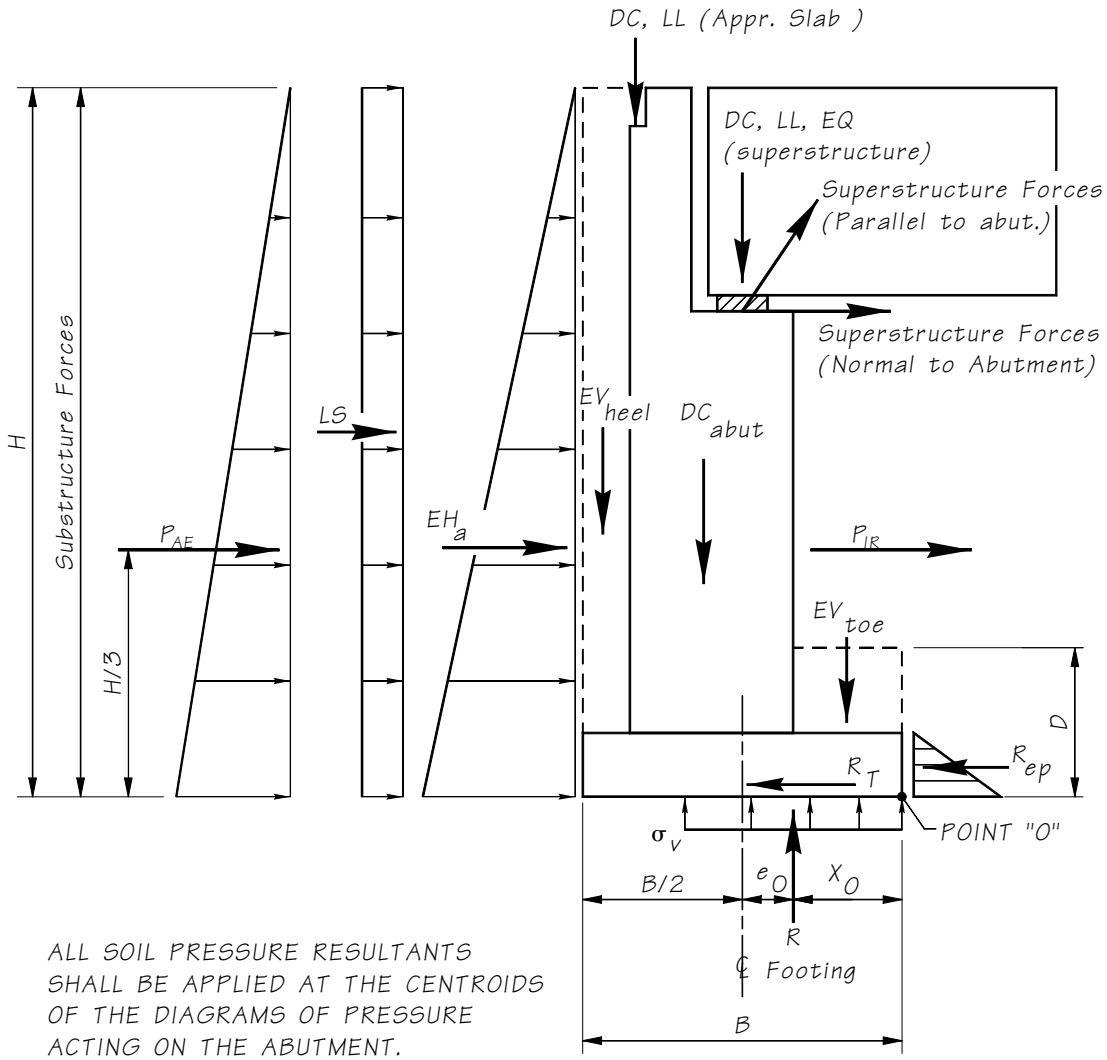

L-Abutment Force Diagram
Figure 7.7.4-2

B. Bearing Stress

For geotechnical and structural footings design, the bearing stress calculation assumes a uniform bearing pressure distribution. For footing designs on rock, the bearing stress is based on a triangular or trapezoidal bearing pressure distribution. The procedure to calculate bearing stress is summarized in the following outline. See Abutment Spread Footing Force Diagrams for typical loads and eccentricity.

Step 1: Calculate the Resultant force (R_{str}), location (Xo_{str}) and eccentricity for Strength (e_{str}).

Xo_{str} = (factored moments about the footing base)/(factored vertical loads)

Step 2A: For Footings on Soil:

Calculate the maximum soil stress (σ_{str}) based on a uniform pressure distribution. Note that this calculation method applies in both directions for biaxially loaded footings. See AASHTO LRFD Section 10.6.3.1.5 for guidance on biaxial loading. The maximum footing pressure on soil with a uniform distribution is:

$\sigma_{str} = R/B' = R/2Xo = R/(B\text{-}2e)$, where B' is the effective footing width.

Step 2B: For Footings on Rock:

If the reaction is outside the middle ⅓ of the base, use a triangular distribution.

σ_{str} max = $2R/3\ Xo$, where "R" is the factored limit state reaction.

If the reaction is within the middle ⅓ of the base, use a trapezoidal distribution.

σ_{str} max = $R/B\ (1+ 6\ e/B)$

In addition, WSDOT limits the maximum stress (P/A) applied to rock due to vertical loads only. This is because the rock stiffness approaches infinity relative to the footing concrete. The maximum width of uniform stress is limited to $C+2D$ as shown in Figure 7.7.4-3.

Step 3: Compare the factored bearing stress (σ_{str}) to the factored bearing resistance ($\phi b_c q_n$) of the soil or rock. The factored bearing stress must be less than or equal to the factored bearing resistance.

$\sigma_{str} \leq \phi b_c q_n$

Step 4: Repeat steps 1 thru 3 for the Extreme Event limit state. Calculate Xo_{ext}, e_{ext}, and σ_{ext} using Extreme Event factors and compare the factored stress to the factored bearing ($\phi_b q_n$).

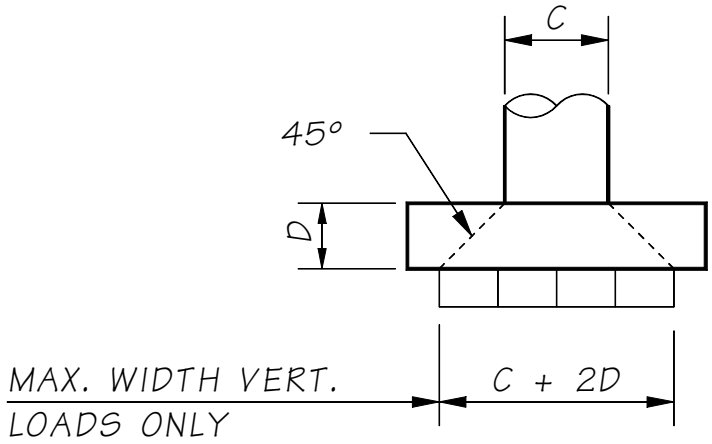

Footings on Rock
Figure 7.7.4-3

C. Failure By Sliding

The factored sliding resistance (Q_R) is comprised of a frictional component ($\varphi_\tau Q_\tau$) and the Geotechnical Branch may allow a passive earth pressure component ($\phi_{ep} Q_{ep}$). The designer shall calculate Q_R based on the soil properties specified in the geotechnical report. The frictional component acts along the base of the footing, and the passive component acts on the vertical face of a buried footing element. The factored sliding resistance shall be greater than or equal to the factored horizontal applied loads.

$$Q_R = \phi_T Q_T + \phi_{ep} Q_{ep}$$

The Strength Limit State ϕ_τ and ϕ_{ep} are provided in the geotechnical report or AASHTO LRFD Section 10.5.5.2.2-1. The Extreme Event Limit State Q_τ and ϕ_{ep} are generally equal to 1.0.

Where:

Q_τ = (R) tan δ

tan δ = Coefficient of friction between the footing base and the soil

tan δ = *tan* ϕ for cast-in-place concrete against soil

tan δ = (0.8)*tan* ϕ for precast concrete

R = Vertical force – Minimum Strength and Extreme Event factors are used to calculate R

ϕ = angle of internal friction for soil

D. Overturning Stability

Calculate the locations of the overturning reaction (R) for strength and extreme event limit states. Minimum load factors are applied to forces and moments resisting overturning. Maximum load factors are applied to forces and moments causing overturning. Note that for footings subjected to biaxial loading, the following eccentricity requirements apply in both directions.

See AASHTO LRFD Sections 11.6.3.3 (Strength Limit State) and 11.6.5 (Extreme Event Limit State) for the appropriate requirements for the location of the overturning reaction (R).

E. Footing Settlement

The service limit state bearing resistance (q_{ser}) will be a settlement-limited value, typically 1″.

Bearing Stress = $\sigma_{ser} < \phi q_{ser}$ = Factored nominal bearing

Where, q_{ser} is the unfactored service limit state bearing resistance and ϕ is the service resistance factor. In general, the resistance factor (ϕ) shall be equal to 1.0.

For immediate settlement (not time dependent), both permanent dead load and live load should be considered for sizing footings for the service limit state. For long-term settlement (on clays), only the permanent dead loads should be considered.

If the structural analysis yields a bearing stress (σ_{ser}) greater than the bearing resistance, then the footing must be re-evaluated. The first step would be to increase the footing size to meet bearing resistance. If this leads to a solution, recheck layout criteria and inform the Geotechnical Engineer the footing size

has increased. If the footing size cannot be increased, consult the Geotechnical Engineer for other solutions.

F. Concrete Design

Footing design shall be in accordance with AASHTO LRFD Section 5.13.3 for footings and the general concrete design of AASHTO LRFD Chapter 5. The following Figure 7.7.4-4 illustrates the modes of failure checked in the footing concrete design.

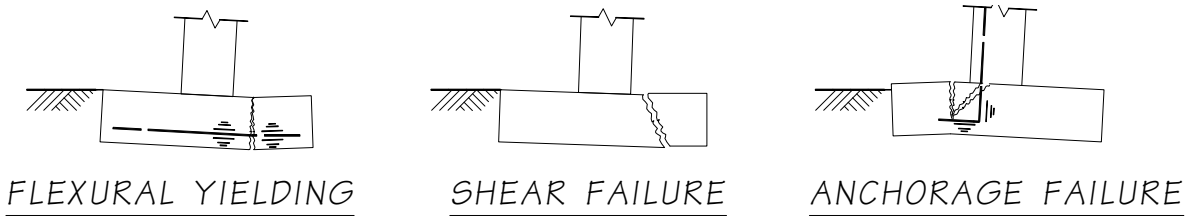

Figure 7.7.4-4

1. Footing Thickness and Shear

The minimum footing thickness shall be 1′-0″. The minimum plan dimension shall be 4′-0″. Footing thickness may be governed by the development length of the column dowels, or by concrete shear requirements (with or without reinforcement). If concrete shear governs the thickness, it is the engineer's judgment, based on economics, as to whether to use a thick footing unreinforced for shear or a thinner footing with shear reinforcement. Generally, shear reinforcement should be avoided but not at excessive cost in concrete, excavation, and shoring requirements. Where stirrups are required, place the first stirrup at $d/2$ from the face of the column or pedestal. For large footings, consider discontinuing the stirrups at the point where $vu = vc$.

2. Footing Force Distribution

The maximum internal forces in the footing shall be determined based on a triangular or trapezoidal bearing pressure distribution, see AASHTO LRFD Section 10.6.5.

3. Vertical Reinforcement (Column or Wall)

Vertical reinforcement shall be developed into the footing to adequately transfer loads to the footing. Vertical rebar shall be bent 90° and extend to the top of the bottom mat of footing reinforcement. This facilitates placement and minimizes footing thickness. Bars in tension shall be developed using 1.25 *Ld*. Bars in compression shall develop a length of 1.25 *Ld*, prior to the bend. Where bars are not fully stressed, lengths may be reduced in proportion, but shall not be less than ¾ *Ld*.

The concrete strength used to compute development length of the bar in the footing shall be the strength of the concrete in the footing. The concrete strength to be used to compute the section strength at the interface between footing and a column concrete shall be that of the column concrete. This is allowed because of the confinement effect of the wider footing.

4. Bottom Reinforcement

Concrete design shall be in accordance with AASHTO LRFD. Reinforcement shall not be less than #6 bars at 12″ centers to account for uneven soil conditions and shrinkage stresses.

5. Top Reinforcement

Top reinforcement shall be used in any case where tension forces in the top of the footing are developed. Where columns and bearing walls are connected to the superstructure, sufficient reinforcement shall be provided in the tops of footings to carry the weight of the footing and overburden assuming zero pressure under the footing. This is the uplift earthquake condition described under "Superstructure Loads." This assumes that the strength of the connection to the superstructure will carry such load. Where the connection to the superstructure will not support the weight of the substructure and overburden, the strength of the connection may be used as the limiting value for determining top reinforcement. For these conditions, the AASHTO LRFD requirement for minimum percentage of reinforcement will be waived. Regardless of whether or not the columns and bearing walls are connected to the superstructure, a mat of reinforcement shall normally be provided at the tops of footings. On short stub abutment walls (4′ from girder seat to top of footing), these bars may be omitted. In this case, any tension at the top of the footing, due to the weight of the small overburden, must be taken by the concrete in tension.

Top reinforcement for column or wall footings designed for two-way action shall not be less than #6 bars at 12″ centers, in each direction while top reinforcement for bearing wall footings designed for one-way action shall not be less than #5 bars at 12″ centers in each direction.

6. Shrinkage and Temperature Reinforcement

For footings greater than 3 feet thick, temperature and shrinkage reinforcing shall be provided on the side faces in accordance with AASHTO LRFD Section 5.10.8.

7.7.5 Pile-Supported Footing Design

The minimum footing thickness shall be 2′-0″. The minimum plan dimension shall be 4′-0″. Footing thickness may be governed by the development length of the column dowels, or by concrete shear requirements. The use of strut and tie modeling is recommended for the design of all pile caps and pile footings. Figure 7.7.5-1 identifies the modes of failure that should be investigated for general pile cap/footing design.

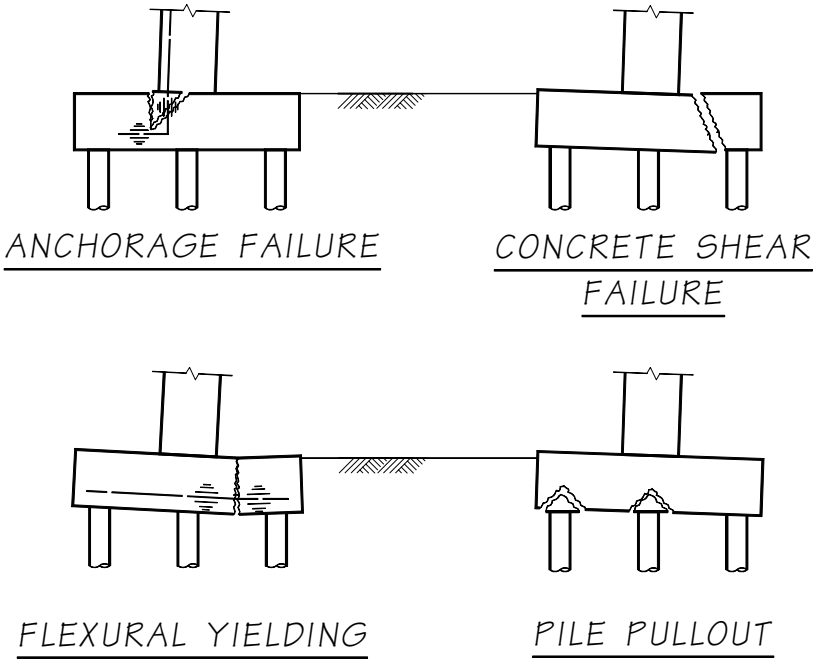

Pile Footing Modes of Failure
Figure 7.7.5-1

A. Pile Embedment, Clearance, and Rebar Mat Location

All piles shall have an embedment in the concrete sufficient to resist moment, shear, and axial loads. The steel casing for cast-in-place concrete piles with reinforcing extending into footings shall be embedded a minimum of 6″. The clearance for the bottom mat of footing reinforcement shall be 1½″ between the reinforcing and the top of the casing for CIP pile footings. See Figure 7.7.5-2 for the minimum pile clearance to the edge of footing.

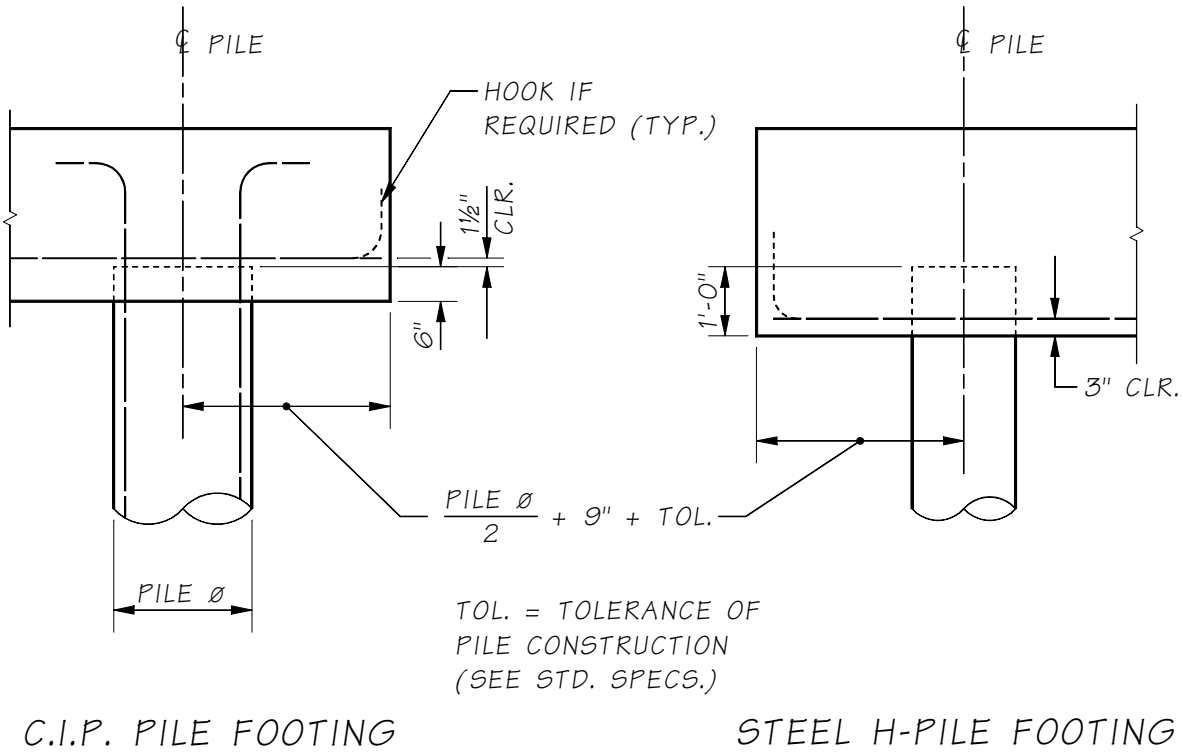

Pile Embedment and Reinforcing Placement
Figure 7.7.5-2

B. Concrete Design

In determining the proportion of pile load to be used for calculation of shear stress on the footing, any pile with its center 6″ or more outside the critical section shall be taken as fully acting on that section. Any pile with its center 6″ or more inside the critical section shall be taken as not acting for that section. For locations in between, the pile load acting shall be proportioned between these two extremes. The critical section shall be taken as the effective shear depth (d_v) as defined in AASHTO LRFD Section 5.8.2.9. The distance from the column/wall face to the allowable construction centerline of pile (design location plus or minus the tolerance) shall be used to determine the design moment of the footing. The strut and tie design method should be used where appropriate.

7.8 Shafts

7.8.1 Axial Resistance

The factored axial resistance of the shaft (R) is generally composed of two parts: the nominal end bearing (R_p) and the nominal skin friction (R_s). The general formula is as follows, where φ is the limit state resistance factor.

$$R = \varphi_p R_p + \varphi_s R_s \quad (7.8.1\text{-}1)$$

The total factored shaft loading must be less than the factored axial resistance. R_p and R_s are treated as independent quantities although research has shown that the end bearing and skin friction resistance have some interdependence. R_p and R_s shown as a function of depth will be stated in the geotechnical report for the bridge. End bearing resistance, R_p, is typically provided by the Geotechnical Branch as a net value. Thus, the effective weight of the shaft can be reduced by the total weight of the excavated soil when examining compressive loads and resistances.

The designer shall consider all applicable factored load combination limit states and shaft resistances when determining shaft axial resistance and demand and shaft tip elevations. For some shaft designs, liquefiable soils, scour conditions and/or downdrag forces may need to be considered. Determining which limit states to include these conditions or forces can be complex. The Hydraulics Branch and the Geotechnical Engineer shall be consulted to ensure overly and/or under conservative load combinations and resistances are not being considered. Open and frequent communication is essential during design.

Although the AASHTO LRFD include water loads, *WA*, in Extreme Event I limit states, in most cases the loss of soil resistance due to scour conditions is not combined with Extreme Event I load combinations. The probability of a design earthquake occurring in the presence of the maximum scour event is low. However, in some instances it is appropriate to include some scour effects. When scour is included with Extreme Event I load combinations, the skin resistance of the soil, up to a maximum of 25 percent of the scour depth for the design flood (l00 year event), shall be deducted from the resistance of the shaft. The loss of skin resistance for the full scour depth for the design flood shall be considered when checking axial resistance of the shaft for all strength and service limit states. The loss of skin resistance for the full scour depth of the check flood (500 year event) shall be considered when checking the axial resistance of the shaft for Extreme Event II limit states. It should be noted that scour does not produce a load effect on the structure but changes the geometry of the bridge pier and available soil resistance so that effects of other loads are amplified. The engineer may also need to consider scour effects on piers that are currently outside of the ordinary high water zones due to potential migration of rivers or streams during flood events. The Hydraulics Branch will provide guidance for these rare cases.

Downdrag forces may also need to be considered in some designs. Downdrag forces are most often caused by the placement of fill adjacent to shafts, which causes consolidation and settlement of underlying soils. This situation is applicable to service and strength limit states. Downdrag forces can also be caused by liquefaction-induced settlement caused by a seismic event. Pore water pressure builds up in liquefiable soils during ground shaking. And as pore water pressure dissipates, the soil layer(s) may settle, causing downdrag forces on the shaft to develop. These liquefaction induced

downdrag forces are only considered in the Extreme Event I limit state. However, downdrag induced by consolidation settlement is never combined with downdrag forces induced by liquefaction, but are only considered separately in their applicable limit states.

The downdrag is treated as a load applied to the shaft foundations. The settling soil, whether it is caused by consolidation under soil stresses (caused, for example, by the placement of fill), or caused by liquefaction, creates a downward acting shear force on the foundations. This shear force is essentially the skin friction acting on the shaft, but reversed in direction by the settlement. This means that the skin friction along the length of the shaft within the zone of soil that is contributing to downdrag is no longer available for resisting downward axial forces and must not be included with the soil resistance available to resist the total downward axial (i.e., compression) loads acting on the foundation.

In general, the Geotechnical Engineer will provide shaft soil resistance plots as a function of depth that includes skin friction along the full length of the shaft. Therefore, when using those plots to estimate the shaft foundation depth required to resist the axial compressive foundation loads, this "skin friction lost" due to downdrag must be subtracted from the resistance indicated in the geotechnical shaft resistance plots, and the downdrag load per shaft must be added to the other axial compression loads acting on the shaft.

Similarly, if scour is an issue that must be considered in the design of the foundation, with regard to axial resistance (both in compression and in uplift), the skin friction lost due to removal of the soil within the scour depth must be subtracted from the shaft axial resistance plots provided by the Geotechnical Engineer. If there is any doubt as to whether or not this skin friction lost must be subtracted from the shaft resistance plots, it is important to contact the Geotechnical Engineer for clarification on this issue. Note that if both scour and downdrag forces must be considered, it is likely that the downdrag forces will be reduced by the scour. This needs to be considered when considering combination of these two conditions, and assistance from the Geotechnical Engineer should be obtained.

The *Geotechnical Design Manual* Chapters 6, 8, and 23, should be consulted for additional explanation regarding these issues.

Following is a summary of potential load combination limit states that shall be checked if scour effects, liquefiable soils and/or downdrag forces are included in the design. The geotechnical report will provide the appropriate resistance factors to use with each limit state.

A. Embankment Consolidation Downdrag

Embankment downdrag from fill or the presence of compressible material below the foundations; no liquefaction.

Checks:

1. Include embankment induced downdrag loads with all Strength and Service Limit States. Do not include with Extreme Limit States. Use maximum load factor unless checking an uplift case, where the minimum shall be used. Subtract the skin friction lost within the downdrag zone from the shaft axial resistance plots provided by the Geotechnical Engineer.

B. Seismic Liquefaction Downdrag

Liquefiable soils with post-earthquake downdrag forces. No embankment downdrag.

If embankment downdrag is present, it shall not be included with liquefaction-induced downdrag therefore it would not be included in Check 3 below.

Checks:

1. **Extreme Event I Limit State**

   Use static soil resistances (no loss of resistance due to liquefaction) and no downdrag forces. Use a live load factor of 0.5.

2. **Extreme Event I Limit State**

   Use reduced soil resistance due to liquefaction and no downdrag forces. Use a live load factor of 0.5. The soils in the liquefied zone will not provide the static skin friction resistance but will in most cases have a reduced resistance that will be provided by the Geotechnical Engineer.

3. **Extreme Event I Limit State**

   Post liquefaction. Include downdrag forces, a live load factor of 0.5 and a reduced post-liquefaction soil resistance provided by the Geotechnical Engineer. Do not include seismic inertia forces from the structure since it is a post-earthquake check. There will be no skin resistance in the post-earthquake liquefied zone. Therefore, subtract the skin friction lost within the downdrag zone from the shaft axial resistance plots provided by the Geotechnical Engineer.

C. Scour

Scour from design flood (100 year events) and check floods (500 year events.) The shaft shall be designed so that shaft penetration below the scour of the applicable flood event provides enough axial resistance to satisfy demands. Since in general the Geotechnical Engineer will provide shaft resistance plots that include the skin friction within the scour zone, the skin friction lost will need to be subtracted from the axial resistance plots provided to determine the shaft resistance acting below the scour depth. A special case would include scour with Extreme Event I limit states without liquefiable soils and downdrag. It is overly conservative to include liquefied soil induced downdrag and scour with the Extreme Event I limit states. The Hydraulics Branch and the Geotechnical Engineer will need to be consulted for this special case.

Checks:

1. Service and Strength Limit States

Subtract the skin friction lost within the scour depth (i.e., 100 percent of the scour depth for the 100 year design flood) from the shaft axial resistance plots provided by the Geotechnical Engineer, to estimate the shaft depth required to resist all service and strength limit demands.

2. Extreme Event II Limit State

Subtract the skin friction lost within the scour depth (i.e., 100 percent of the scour depth for the 500 year check flood event) from the shaft axial resistance plots provided by the Geotechnical Engineer, to estimate the shaft depth required to resist all Extreme Event II limit demands. Use a live load factor of 0.5. Do not include ice load, *IC*, vessel collision force, *CV*, and vehicular collision force, *CT*.

3. Extreme Event II Limit State

Subtract the skin friction lost within the scour depth (in this case only 50 percent of the scour depth for the 500 year check flood event) from the shaft axial resistance plots provided by the Geotechnical Engineer, to estimate the shaft depth required to resist all Extreme Event II limit demands. Use a live load factor of 0.5. In this case, include ice load, *IC*, vessel collision force, *CV*, and vehicular collision force, *CT*.

4. Extreme Event I Limit State (special case - no liquefaction)

Subtract the skin friction lost within the scour depth (i.e., in this case 25 percent of the scour depth for the 100 year design flood) from the shaft axial resistance plots provided by the Geotechnical Engineer, to estimate the shaft depth required to resist the Extreme Event I limit state demands.

D. Axial Resistance Group Reduction Factors

The group reduction factors for axial resistance of shafts for the strength and extreme event limit states shall be taken as shown in Table 7.8.1-1 unless otherwise specified by the Geotechnical Engineer. These reduction factors presume that good shaft installation practices are used to minimize or eliminate the relaxation of the soil between shafts and caving. If this cannot be adequately controlled due to difficult soils conditions or for other constructability reasons, lower group reduction factors shall be used as recommended by the Geotechnical Engineer of record. Alternatively, steps could be required during and/or after shaft construction to restore the soil to its original condition. The Geotechnical Engineer will provide these recommendations, which could include but is not limited to, pressure grouting of the tip, grouting along side of the shaft or full length casing.

Soil Type	Shaft Group Configuration	Shaft Center-to-Center Spacing	Special Conditions	Group Reduction factor, η
Cohesionless (Sands, gravels, etc.)	Single row	2*D*		0.90
		2.5*D*		0.95
		3*D* or more		1.0
	Multiple row	2.5*D**		0.67
		3*D*		0.80
		4*D* or more		1.0
	Single and multiple rows	2*D* or more	Shaft group cap in intimate contact with ground consisting of medium-dense or denser soil	1.0
	Single and multiple rows	2*D* or more	Full depth casing is used and augering ahead of the casing is not allowed, or pressure grouting is used along the shaft sides to restore lateral stress losses caused by shaft installation, and the shaft tip is pressure grouted	1.0
Cohesive (Clays, clayey sands, and glacially overridden, well-graded soils such as glacial till)	Single or multiple rows	2*D* or more		1.0

*Minimum spacing for multiple row configurations.

Group Reduction Factors for Axial Resistance of Shafts
Table 7.8.1-1

These group reduction factors apply to both strength and extreme event limit states. For the service limit state the influence of the group on settlement as shall be determined from the AASHTO LRFD and the *Geotechnical Design Manual* M 46-03.

7.8.2 Structural Design and Detailing

Standard Specifications Section 6-19 should be reviewed as part of the design of shafts. The structural design of shafts is similar to column design. The following guidelines shall be followed:

A. For shaft foundation supporting columns in any SDC, Shafts shall be designed to resist the 1.25 times the plastic overstrength of the column above. Where elastic design methods are approved in SDC C or D, the shaft may be designed to resist 1.2 times the elastic seismic forces at the demand displacement.

B. Concrete Class 5000P shall be specified for the entire length of the shaft for wet or dry conditions of placement.

C. When shafts are constructed in water, the concrete specified for the casing shoring seal shall be Class 4000W.

D. The assumed concrete compressive strength may be taken as $f'c$ for structural design of shafts. For seismic design, the expected compressive strength may be taken as 1.3 times this reduced value in accordance with AASHTO Seismic Section 8.4.4.

E. The presence of permanent steel casing shall be taken into account in the shaft design (i.e. for stiffness, and etc.), but the structural resistance of permanent steel casing shall not be considered for structural design of shafts unless the design conforms to Section 7.10.

F. Cover requirements vary depending on the shaft diameter and shall be as specified below:

- Diameter less than or equal to 3′-0″ = 3″
- Diameter greater than 3′-0″ and less than 5′-0″ = 4″
- Diameter greater than or equal to 5′-0″ = 6″

Standard Specifications Section 6-19 lists exceptions to these cover requirements when permanent slip casings are used in column splice zones.

G. In general, shaft reinforcing shall be detailed to minimize congestion, facilitate concrete placement by tremie, and maximize consolidation of concrete.

H. The clear spacing between spirals and hoops shall not be less than 6″ or more than 9″, with the following exception. The clear spacing between spirals or hoops may be reduced in the splice zone in single column/single shaft connections because shaft concrete may be vibrated in this area, negating the need for larger openings to facilitate good flow of concrete through the reinforcing cage.

I. The volumetric ratio and spacing requirements of the AASHTO Seismic Specifications for confinement need not be met. The top of shafts in typical WSDOT single column/single shaft connections remains elastic under seismic loads due to the larger shaft diameter (as compared to the column). Therefore this requirement does not need to be met.

J. Shaft transverse reinforcement may be constructed as hoops or spirals. Spiral reinforcement is preferred for shaft transverse reinforcement. However, if #6 spirals at 6″ (excluding the exception in 7.8.2.H) clear do not satisfy the shear design, circular hoops may be used. Circular hoops in shafts up to #9 bars may be lap spliced using a welded lap detail. Note: Welded lap splices for spirals are currently acceptable under the AWS D1.4 up to bar size #6. Recent testing has been performed by WSDOT for bar sizes #7 through #9. All tests achieved full tensile capacity (including 125 percent of yield strength.) Therefore, #7 through #9 welded lap spliced hoops are acceptable to use provided they are not located in possible plastic hinge regions. Circular hoops may also be fabricated using a manual direct butt weld, resistance butt weld, or mechanical coupler. Weld splicing of hoops for shafts shall be completed prior to assembly of the shaft steel reinforcing cage. Refer to Section 7.4.5 for additional discussion on circular hoops. Mechanical couplers may be considered provided cover and clearance requirements are accounted for in the shaft details. When welded hoops or mechanical couplers are used, the plans shall show a staggered pattern around the perimeter of the shaft so that no two adjacent welded splices or couplers are located at the same location.

K. In single column/single shaft configurations, the spacing of the shaft transverse reinforcement in the splice zone shall meet the requirements of the following equation, which comes from the TRAC Report titled, *"Noncontact Lap Splices in Bridge Column-Shaft Connections"*:

$$S_{max} = \frac{2\pi A_{sh} f_{ytr} l_s}{k A_l f_{ul}} \quad (7.8.2\text{-}1)$$

Where:

S_{max} = Spacing of transverse shaft reinforcement

A_{sh} = Area of shaft spiral or transverse reinforcement bar

f_{ytr} = Yield strength of shaft transverse reinforcement

l_s = Standard splice length of the column reinforcement, per AASHTO LRFD.

A_l = Total area of longitudinal column reinforcement

f_{ul} = Specified minimum tensile strength of column longitudinal reinforcement (ksi), 90 ksi for A615 and 80 ksi for A706

k = Factor representing the ratio of column tensile reinforcement to total column reinforcement at the nominal resistance. In the upper half of the splice zone, k = 1.0. In the lower half of the splice zone, this ratio could be determined from the column moment-curvature analysis using computer programs XTRACT or CSiBridge. To simplify this process, k = 0.5 could safely be used in most applications

The additional lateral reinforcement in the upper half of the oversized pile shafts is required to control cracking in this region. The volumetric ratio of transverse reinforcement throughout the splice zone shall not be less that provided by a #6 spiral with a 6″ pitch.

L. Longitudinal reinforcement shall be provided for the full length of shafts. The minimum longitudinal reinforcement in the splice zone of single column/single shaft connections shall be the larger of 0.75 percent A_g of the shaft or 1.0 percent A_g of the attached column. The minimum longitudinal reinforcement beyond the splice zone shall be 0.75 percent A_g of the shaft. The minimum longitudinal reinforcement in shafts without single column/single shaft connections shall be 0.75 percent A_g of the shaft.

M. The clear spacing between longitudinal reinforcement shall not be less than 6″ or more than 9″. If a shaft design is unable to meet this minimum requirement, a larger diameter shaft shall be considered. Alternatively, Grade 80 reinforcing steel could be considered. Where 3-bar bundles are used, the plans shall allow the contractor to construct the cage with two of the three bars located towards the center of the shaft. This allows the contractor flexibility in constructing the cage, but it reduces the flexural resistance of the shaft.

N. Longitudinal reinforcing in shafts should be straight with no hooks to facilitate concrete placement and removal of casing. If hooks are necessary to develop moment at the top of a shaft (in a shaft cap situation) the hooks should be turned toward the center of the shaft while leaving enough opening to allow concrete placement with a tremie.

O. Locations of longitudinal splices shall be shown in the contract plans. Mechanical splices shall be placed in low stress regions and staggered 2′-0″ minimum.

P. Use of two concentric circular rebar cages shall be avoided.

Q. Resistance factors for Strength Limit States shall be per the latest AASHTO LRFD. Resistance factors for Extreme Event Limit States shall be per the latest AASHTO *Seismic Specifications*. The resistance factor for shear shall conform to the AASHTO LRFD.

R. The axial load along the shaft varies due to the side friction. It is considered conservative, however, to design the shaft for the full axial load plus the maximum moment. The entire shaft normally is then reinforced for this axial load and moment.

S. Access tubes for Crosshole Sonic Log (CSL) testing or thermal wires for Thermal Integrity Profiling (TIP) shall be provided in all shafts. One tube or wire shall be furnished and installed for each foot of shaft diameter, rounded to the nearest whole number, and shown in the plans. The number of access tubes or wires for shaft diameters specified as "X feet 6 inches" shall be rounded up to the next higher whole number. The access tubes shall be placed around the shaft, inside the spiral or hoop reinforcement and three inches clear of the vertical reinforcement, at a uniform spacing measured along the circle passing through the centers of the access tubes. If the vertical reinforcement is not bundled and each bar is not more than one inch in diameter, the access tubes shall be placed two inches clear of the vertical reinforcement. If these minimums cannot be met due to close spacing of the vertical reinforcement, then access tubes shall be bundled with the vertical reinforcement. The thermal wires shall be placed around the shaft, inside the spiral or hoop reinforcement and shall be tied to the vertical reinforcement.

T. Shafts shall be specified in English dimensions and shall be specified in sizes that do not preclude any drilling method. Shafts shall be specified in whole foot increments except as allowed here. The tolerances in *Standard Specifications* Section 6-19 accommodate metric casing sizes and/or oversized English casing sizes. Oversized English casings are often used so that tooling for drilling the shafts, which are the nominal English diameter, will fit inside the casing. There are a few exceptions, which will be discussed below. See Table 7.8.2-1 for casing sizes and tolerances.

Column A	Column B	Column C	Column D	Column E	Column F	Column G	Column H
Nominal (Outside) English Casing Diameter		*Maximum Increase in Casing Inside Diameter	*Maximum Decrease in Casing Inside Diameter	Maximum English Casing Diameter	Nominal (Outside) Metric Casing Diameter		
Feet	Inches	Inches	Inches	Inches	Meters	Feet	Inches
12.0	144	6	0	150	3.73	12.24	146.85
11.0	132	6	0	138	3.43	11.25	135.0
10.0	120	6	2	126	3.00	9.84#	118.11
9.5	114	6	0	120	3.00	9.84	118.11
9.0	108	6	0	114	2.80	9.19	110.23
8.0	96	6	0	102	2.50	8.20	98.42
7.0	84	6	0	90	2.20	7.22	86.61
6.5	78	6	0	84	2.00	6.56	78.74
6.0	72	6.75##	0	78	2.00	6.56	78.74
5.5	66	6	0	72			
5.0	60	12	1	72	1.5	4.92#	59.05
4.5	54	12	0	66	1.50	4.92	59.05
4.0 **	48	12	0	60	1.5	4.92	59.05
4.0**	48	12	1	60	1.2	3.94#	47.28
3.0	36	12	0	48	1.00	3.28	39.37
3.0	36	12	0	48	0.915	3.00	36.02
2.5	30	12	0	42			
2.0	24	12	0	36	0.70	2.30	27.56

*Check *Standard Specifications* Section 6-19.

**Construction tolerances would allow either 1.2 or 1.5 meter casing to be used.

Designer shall check that undersize shaft meets the design demands.

Exception to typical construction tolerance of 6″.

Table 7.8.2-1

As seen in Table 7.8.2-1, construction tolerances shown in Column "C" allow shaft diameters to be increased up to 12″ for shafts 5′-0″ diameter or less and increased up to 6″ for shafts greater than 5′-0″ in diameter. In most cases these construction tolerances allow either metric or English casings to be used for installation of the shafts.

There are a few exceptions to these typical tolerances. These exceptions are as follows:

1. 4.0′ Diameter Shafts

The tolerances in Columns "C" and "D" of Table 7.8.2-1 allow either an oversized 4.92′ diameter shaft or an undersized 3.94′ shaft to be constructed. The reinforcement cage shall be sized to provide a minimum of 3″ of cover to the undersized diameter.

2. 5.0′ Diameter Shafts

The tolerances in Columns "C" and "D" of Table 7.8.2-1 allow either an oversized 6.0′ diameter shaft or an undersized 4.92′ diameter shaft to be constructed. The reinforcement cage shall be sized to provide a minimum of 4″ of cover to the undersized diameter.

3. 6.0′ Diameter Shafts

Maximum oversize tolerance of 6¾″ is allowed.

4. 10.0′ Diameter Shafts

The tolerances in Columns "C" and "D" of Table 7.8.2-1 allow either an oversized 10.5′ diameter shaft or an undersized 9.84′ diameter shaft to be constructed. The reinforcement cage shall be sized to provide a minimum of 4″ of cover to the undersized diameter.

For all shaft diameters, the designer should bracket the design so that all possible shaft diameters, when considering the construction tolerances, will satisfy the design demands. The minimum shaft diameter (nominal or undersized) shall be used for design of the flexural and shear reinforcement.

The nominal English shaft diameter shall be specified on the plans. When requesting shaft resistance charts from the Geotechnical Engineer, the designer should request charts for the nominal English shaft diameter.

U. Shafts supporting a single column shall be sized to allow for construction tolerances, as illustrated in Figure 7.8.2-2.

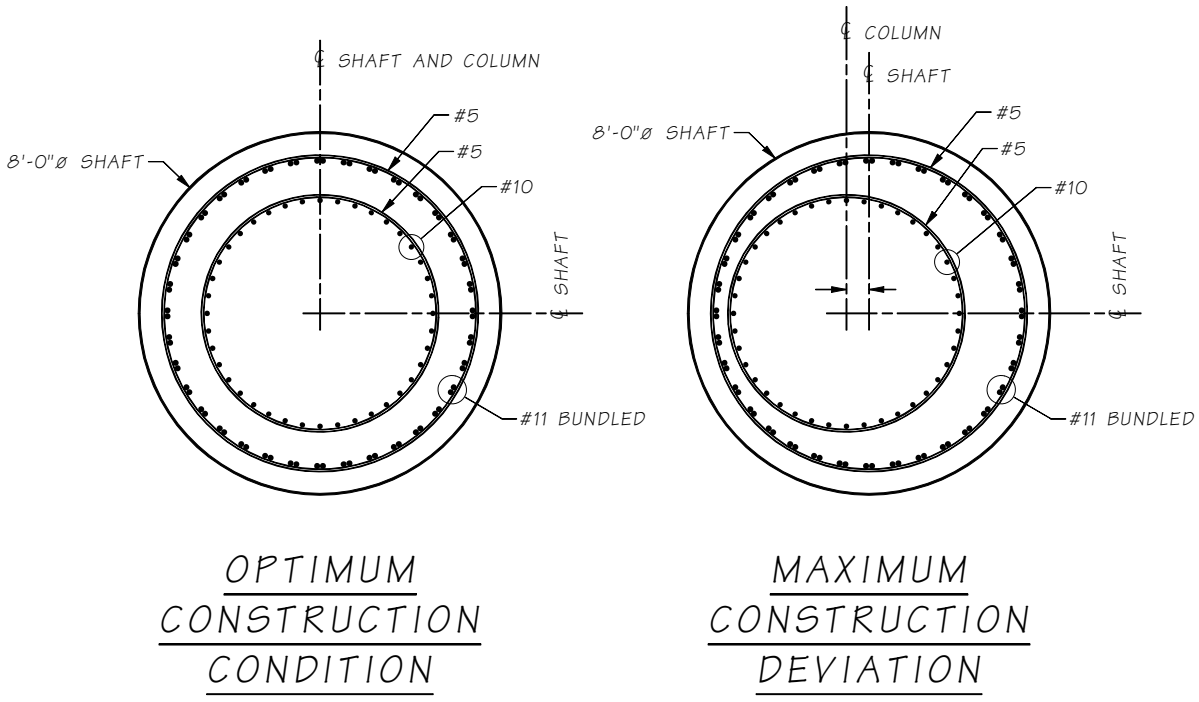

Figure 7.8.2-1

The shaft diameter shall be based on the maximum column diameter allowed by the following equation,

Maximum Column Diameter = Shaft Diameter – 2*(Shaft Concrete Cover) – 2*(Shaft Horizontal Construction Tolerance) – 2*(Shaft Cage Thickness)

The shaft horizontal construction tolerance and shaft concrete cover shall conform to *Standard Specifications* Section 6-19.

If the column diameter used in design is larger than the maximum allowed for a given shaft size, as defined by the equation above, a larger shaft diameter shall be used.

The shaft diameter specified here should not be confused with the desirable casing shoring diameter discussed below.

V. Casing shoring shall be provided for all shafts below grade or waterline. However, casing shoring requirements are different for shafts in shallow excavations and deep excavations. Shafts in deep excavations require a larger diameter casing shoring to allow access to the top of the shaft for column form placement and removal. The top of shafts in shallow excavations (approximately 4′ or less) can be accessed from the ground line above, by reaching in or by "glory-holing", and therefore do not require larger diameter casing shoring, see Figure 7.8.2-3. The designer shall locate the top of in-water shafts above the water line when it simplifies construction. Where there is a strong design benefit to lowering the top of in-water shafts, they may be located below the groundline/mudline.

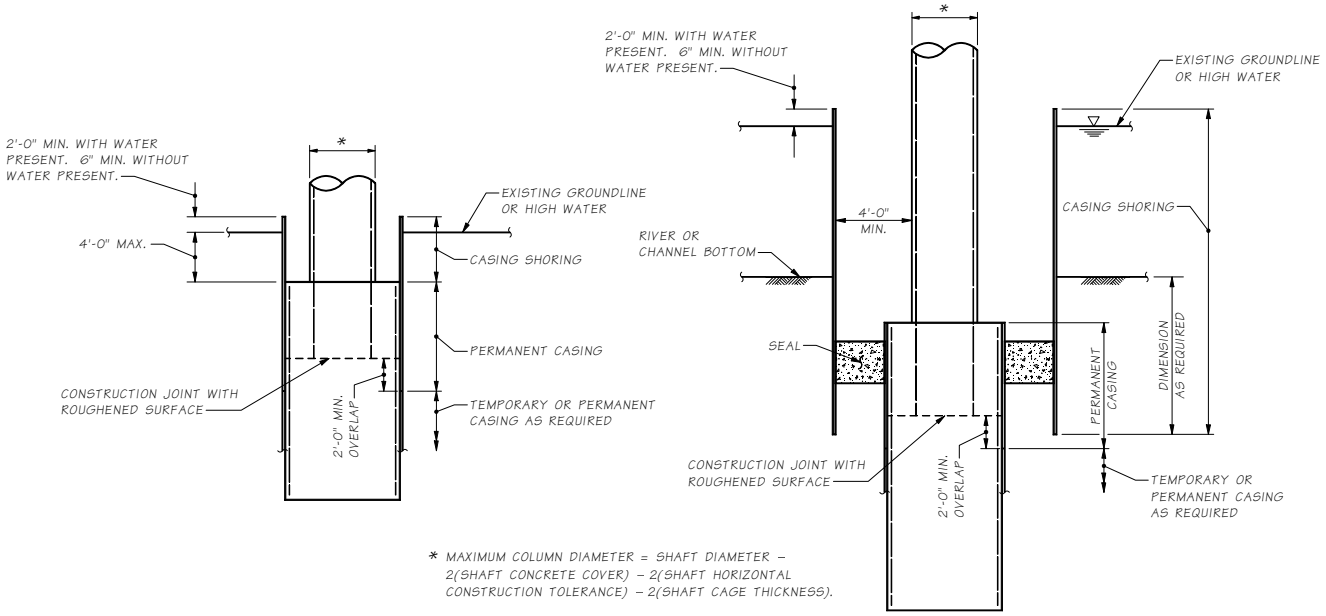

SHAFT CASING DETAILS IN SHALLOW EXCAVATIONS AND LOW WATER

SHAFT CASING DETAILS IN DEEP EXCAVATIONS OR HIGH WATER

Figure 7.8.2-2

W. Changes in shaft diameters due to construction tolerances shall not result in a reinforcing steel cage diameter different from the diameter shown in the plans (plan shaft diameter minus concrete cover). For example, metric casing diameters used in lieu of English casing diameters shall only result in an increase in concrete cover, except as noted below for single column/single shaft connections requiring slip casings. There are also exceptions for 4′-0″, 5′-0″, and 10′-0″ diameter shafts, see Table 7.8.2-1.

X. Rotator and Oscillator drilling methods typically use a slip casing for permanent casing in single column/single shaft connections, as shown in Figure 7.8.2-4.

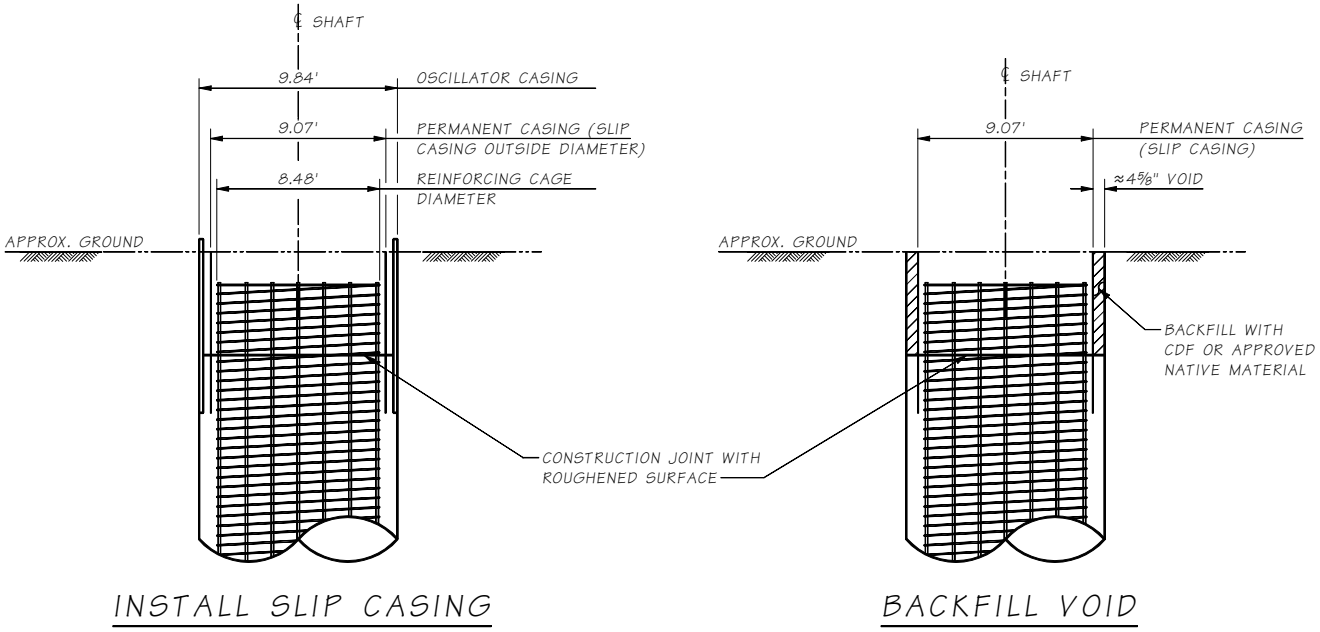

10'-0" Ø Shaft Constructed With The Oscillator Method
Figure 7.8.2-3

The use of the slip casing typically requires a modification to the reinforcing cage diameter. This should be considered during the structural design of the shaft. The slip casing also results in less concrete cover than the area of the shaft below the slip casing. See Table 7.8.2-2 for expected reinforcing cage diameters and clear cover. Shafts shall be designed such that the reduced concrete cover is acceptable in this area because the casing is permanent. A minimum of 3″ of concrete cover is achievable in this area for shafts 4′-0″diameter and larger and 1½″ of cover for shafts less than 4′-0″. These concrete cover requirements shall be kept as a minimum requirement. The reduction in strength (compared to the area below the slip casing) associated with the reduced shaft diameter that results from the slip casing is bounded within the shaft analysis and design methods prescribed here and elsewhere. Therefore the reduction in strength in this area can be ignored.

Y. Reinforcing bar centralizers shall be detailed in the plans as shown in Figure 7.8.2-5.

Nominal (Outside) Metric Casing Diameter		Maximum (Outside) Reinf. Cage Diameter to Accommodate Metric Casing[1]		Inside Diameter of Metric Casing[2]	Nominal (Outside) Metric Slip Casing Diameter[3]			Cage Clearance Below Slip Casing	Cage Clearance at Slip Casing[4]
Meters	Feet	Inches	Feet	Inches	Inches	Feet	Meters	Inches	Inches
3.73	12.24	130.52	10.88	140.52	137.52	11.46	3.49	8.16	3.0
3.43	11.25	118.71	9.89	128.71	125.71	10.48	3.19	8.16	3.0
3.00	9.84	101.81	8.48	111.84	108.81	9.07	2.76	8.15	3.0
2.80	9.19	95.51	7.96	105.51	102.51	8.54	2.60	7.36	3.0
2.50	8.20	83.70	6.98	93.70	90.70	7.56	2.30	7.36	3.0
2.20	7.22	71.89	5.99	81.89	78.89	6.57	2.00	7.36	3.0
2.00	6.56	64.02	5.34	74.02	71.02	5.92	1.80	7.36	3.0
1.50	4.92	45.12	3.76	55.12	52.12	4.34	1.32	6.97	3.0
1.2	3.94	34.08	2.84	44.09	41.09	3.42	1.044	6.57	3.0
1.00	3.28	30.22	2.52	36.22	34.22	2.85	0.87	4.57	1.5
0.92	3.00	26.87	2.24	32.87	30.87	2.57	0.78	4.57	1.5

Notes:

1. Provided by Malcolm Drilling. Assumes minimum of 5″ clearance to inside of oscillator casing on 4′ and larger and uses 3″ of clearance on smaller than 4′ (1.2 meters).
2. Provided by Malcolm Drilling.
3. Provided by Malcolm Drilling. Slip casing is 3″ smaller than inside diameter of temporary casing from 1.2 meters to 3 meters. 1 meter on down is 2″ smaller in diameter.
4. Slip casing is typically ⅜″ to ½″ thick (provided by Malcolm Drilling). Cage clearance assumes ½″ thick casing.

Table 7.8.2-2

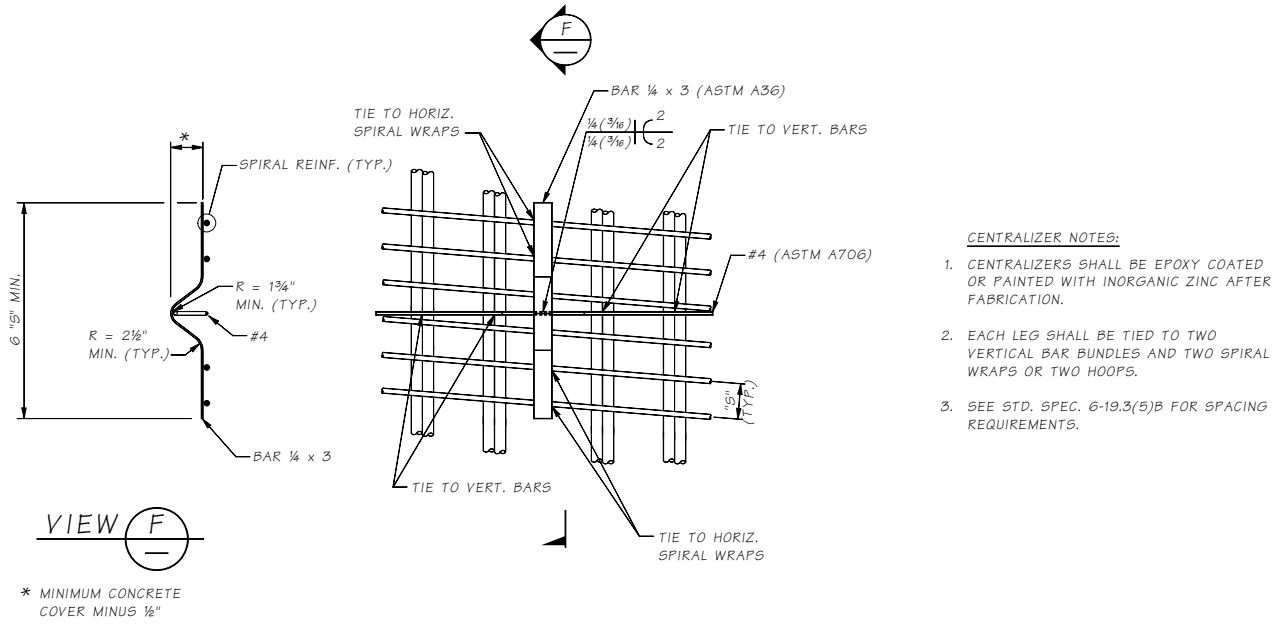

Centralizer Detail
Figure 7.8.2-4

7.9 Piles and Piling

7.9.1 Pile Types

This section describes the piling used by the Bridge and Structures Office and their applications. In general, piles should not be used where spread footings can be used. However, where heavy scour conditions may occur, pile foundations should be considered in lieu of spread footings. Also, where large amounts of excavation may be necessary to place a spread footing, pile support may be more economical.

A. Cast-in-place Concrete Piles

Cast-in-place (CIP) concrete piles utilize driven steel pipe casings, which are then filled with reinforcing steel and concrete. The bottom of the casing is typically capped with a suitable flat plate for driving. However, the Geotechnical Branch may specify special tips when difficult driving is expected.

The Geotechnical Branch will determine the minimum wall thickness of the steel pipe casings based on driving conditions. However, the *Standard Specifications* require the contractor to provide a wall thickness that will prevent damage during driving.

B. Precast, Prestressed Concrete Piles

Precast, prestressed concrete piles are octagonal, or square in cross-section and are prestressed to allow longer handling lengths and resist driving stresses. Standard Plans are available for these types of piles.

C. Steel H Piles

Steel piles have been used where there are hard layers that must be penetrated in order to reach an adequate point bearing stratum. Steel stress is generally limited to 9.0 ksi (working stress) on the tip. H piling can act efficiently as friction piling due to its large surface area. Do not use steel H piling where the soil consists of only moderately dense material. In such conditions, it may be difficult to develop the friction capacity of the H piles and excessive pile length may result.

D. Timber Piles

Timber piles may be untreated or treated. Untreated piles are used only for temporary applications or where the entire pile will be permanently below the water line. Where composite piles are used, the splice must be located below the permanent water table. If doubt exists as to the location of the permanent water table, treated timber piles shall be used.

Where dense material exists, consideration should be given to allowing jetting (with loss of uplift capacity), use of shoes, or use of other pile types.

E. Steel Sheet Piles

Steel sheet piles are typically used for cofferdams and shoring and cribbing, but are usually not made a part of permanent construction.

CIP concrete piles consisting of steel casing filled with reinforcing steel and concrete are the preferred type of piling for WSDOT's permanent bridges. Other pile types such as precast, prestressed concrete piles, steel H piles, timber piles,

auger cast piles, and steel pipe piles shall not be used for WSDOT permanent bridge structures. These types of piles may be used for temporary bridges and other non-bridge applications subject to approval by the State Geotechnical Engineer and the State Bridge Design Engineer.

Micropiles shall not be used for new bridge foundations. This type of pile may be used for foundation strengthening of existing bridges, temporary bridges and other non-bridge applications subject to approval by the State Geotechnical Engineer and the State Bridge Design Engineer.

Battered piles shall not be used for bridge foundations to resist lateral loads.

The above limitations apply to all WSDOT bridges including mega projects and design-build contracts.

The above policy on pile types is the outcome of lengthy discussions and meetings between the bridge design, construction and Geotechnical Engineers. These limitations are to ensure improved durability, design and construction for WSDOT pile foundations.

In seismic applications there is a need for bi-directional demands. Steel H piles have proven to have little bending resistance for the purposes of resisting seismic load while circular CIP piles provide consistent capacities in all directions. Also, CIP pile casing is generally available in a full range of casing diameters. CIP piles are easily inspected after driving to ensure the quality of the finished pile prior to placing reinforcing steel and concrete.

Precast, prestressed concrete piles, and timber piles are difficult to splice and for establishing moment connections into the pile cap.

Micropiles have little bending resistance for the purposes of resisting lateral loads in seismic applications.

7.9.2 Single Pile Axial Resistance

The geotechnical report will provide the nominal axial resistance (R_n) and resistance factor (ϕ) for pile design. The factored pile load ($P_{U\,pile}$) must be less than the factored resistance, ϕR_n, specified in the geotechnical report.

Pile axial loading ($P_{U\,pile}$) due to loads applied to a pile cap are determined as follows:

$$\left(P_{U\,pile}\right) = \left(P_{U\,pile\,group}\right)/N + M_{U\,group}\,C/I_{group} + \gamma DD \qquad (7.9.2\text{-}1)$$

Where:

$M_{U\,group}$ = Factored moment applied to the pile group. This includes eccentric *LL*, *DC*, centrifugal force (*CE*), etc. Generally, the dynamic load allowance (*IM*) does not apply.

C = Distance from the centroid of the pile group to the center of the pile under consideration.

I_{group} = Moment of inertia of the pile group

N = Number of piles in the pile group

$P_{U\,pile\,group}$ = Factored axial load to the pile group

DD = Downdrag force specified in the geotechnical report

γ = Load factor specified in the geotechnical report

Pile selfweight is typically neglected. As shown above, downdrag forces are treated as load to the pile when designing for axial resistance. However, it should not be included in the structural analysis of the bridge.

See Section 7.8.1 "Axial Resistance" of shafts for discussion on load combinations when considering liquefaction, scour and on downdrag effects. These guidelines are also applicable to piles.

7.9.3 Block Failure

For the strength and extreme event limit states, if the soil is characterized as cohesive, the pile group resistance shall also be checked for the potential for a "block" failure, as described in AASHTO LRFD Section 10.7.3.9. This check requires interaction between the designer and the Geotechnical Engineer. The check is performed by the Geotechnical Engineer based on loads provided by the designer. If a block failure appears likely, the pile group size shall be increased so that a block failure is prevented.

7.9.4 Pile Uplift

Piles may be designed for uplift if specified in the geotechnical report. In general, pile construction methods that require preboring, jetting, or spudding will reduce uplift capacity.

7.9.5 Pile Spacing

Pile spacing determination is typically determined collaboratively with the Geotechnical Engineer. The *Geotechnical Design Manual* M 46-03 specifies a minimum center-to-center spacing of 30″ or 2.5 pile diameters. However, center-to-center spacings of less than 2.5 pile diameters may be considered on a case-by-case basis.

7.9.6 Structural Design and Detailing of CIP Concrete Piles

The structural design and detailing of CIP Concrete piles is similar to column design with the following guidelines:

A. Concrete Class 5000P Concrete shall be specified for CIP concrete piles. The top 10′ of concrete in the pile is to be vibrated. Use 1.0 f'_c for the structural design.

B. For structural design, the reinforcement alone shall be designed to resist the total moment throughout the length of pile without considering strength of the steel casing. The minimum reinforcement shall be 0.75 percent A_g for SDC B, C, and D and shall be provided for the full length of the pile unless approved by the WSDOT Bridge Design Engineer. Minimum clearance between longitudinal bars shall meet the requirements in Appendix 5.1-A2.

C. If the pile to footing/cap connection is not a plastic hinge zone longitudinal reinforcement need only extend above the pile into the footing/cap a distance equal to 1.0 l_d (tension). If the pile to footing/cap connection is a plastic hinge zone longitudinal reinforcement shall extend above the pile into the footing/cap a distance equal to 1.25 l_d.

D. Since the diameter of the concrete portion of the pile is dependent on the steel casing thickness, the as-built diameter will not be known during design (since the casing thickness is determined by the contractor). As such, a casing thickness must be assumed for design. The structural engineer should work closely with the Geotechnical Engineer to determine a suitable casing thickness to assume based on expected driving conditions. A pile drivability analysis may be required for this. Otherwise, the following can typically be assumed:
   - ¼″ for piles less than 14″ in diameter
   - ⅜″ for piles 14″ to 18″ in diameter
   - ½″ for larger piles

E. Steel casing for 24″ diameter and smaller CIP piling should be designated by nominal diameter rather than inside diameter. *Standard Specifications* Section 9-10.5 requires steel casings to meet ASTM A252 Grade 2, which is purchased by nominal diameter (outside diameter) and wall thickness. A pile thickness should not be stated in the plans. As stated previously, the *Standard Specifications* require the contractor to determine the pile casing thickness required for driving.

F. Transverse spiral reinforcement shall be designed to resist the maximum shear in the pile. Avoid a spiral pitch of less than 3″. The minimum spiral shall be a #4 bar at 9″ pitch. If the pile to footing/cap connection is not a plastic hinge zone the volumetric requirements of AASHTO LRFD Section 5.13.4.6 need not be met.

G. Resistance factors for Strength Limit States shall be per the latest AASHTO LRFD. Resistance factors for Extreme Event Limit States shall be per the latest AASHTO Seismic Specifications.

H. Piles are typically assumed to be continuously supported. Normally, the soil surrounding a foundation element provides sufficient bracing against a buckling failure. Piles that are driven through very weak soils should be designed for reduced lateral support, using information from the Geotechnical Branch as appropriate. AASHTO LRFD 10.7.3.13.4 may be used to estimate the column length for buckling. Piles driven through firm material normally can be considered fully supported for column action (buckling not critical) below the ground.

I. The axial load along the pile varies due to side friction. It is considered conservative, however, to design the pile for the full axial load plus the maximum moment. The entire pile is then typically reinforced for this axial load and moment.

J. In all cases of uplift, the connection between the pile and the footing must be carefully designed and detailed. The bond between the pile and the seal may be considered as contributing to the uplift resistance. This bond value shall be limited to 10 psi. The pile must be adequate to carry tension throughout its length. For example, a timber pile with a splice sleeve could not be used.

7.9.7 Pile Splices

Pile splices shall be avoided where possible. If splices may be required in timber piling, a splice shall be detailed on the plans. Splices between treated and untreated timber shall always be located below the permanent water line. Concrete pile splices shall have the same strength as unspliced piles.

7.9.8 Pile Lateral Design

The strength limit state for lateral resistance is only structural, though the determination of pile fixity is the result of soil-structure interaction. A failure of the soil does not occur; the soil will continue to displace at constant or slightly increasing resistance. Failure occurs when the pile reaches the structural limit state and this limit state is reached, in the general case, when the nominal combined bending, shear, and axial resistance is reached.

Piles resist horizontal forces by a combination of internal strength and the passive pressure resistance of the surrounding soil. The capacity of the pile to carry horizontal loads should be investigated using a soil/structural analysis. For more information on modeling individual piles or pile groups, see Section 7.2, Foundation Modeling and Section 7.2.6 Lateral Analysis of Piles and Shafts.

7.9.9 Battered Piles

As stated previously, battered piles shall not be used to resist lateral loads for new bridge foundations. Where battered piles are used, the maximum batter shall be 4½:12. Piles with batters in excess of this become very difficult to drive and the bearing values become difficult to predict. Ensure that battered piling do not intersect piling from adjacent footings within the maximum length of the piles.

7.9.10 Pile Tip Elevations and Quantities

Pile length quantities provided to PS&E are based on the minimum tip elevation given in the geotechnical report or the expected depth required for axial design, whichever is greater. If the minimum tip elevation given in the geotechnical report is greater than the design tip elevation, overdriving the pile will be required. The Geotechnical Engineer shall be contacted to evaluate driving conditions. A General Provision will be required in the Special Provisions to alert the contractor of the additional effort needed to drive these piles.

If a minimum tip elevation is required, it shall be shown in the contract plans. Minimum pile tip elevations provided in the geotechnical report may need to be adjusted to lower elevations depending on the results of the lateral, axial, and uplift analysis. If adjustment in the minimum tip elevations is necessary, or if the pile diameter needed is different than what was assumed for the geotechnical report, the Geotechnical Branch **must** be informed so that pile drivability can be re-evaluated.

Note that lateral loading and uplift requirements may influence (possibly increase) the number of piles required in the group if the capacity available at a reasonable minimum tip elevation is not adequate. This will depend on the soil conditions and the loading requirements. For example, if the upper soil is very soft or will liquefy, making the minimum tip elevation deeper is unlikely to improve the lateral response of the piles enough to be adequate. Adding more piles to the group or using a larger pile diameter to increase the pile stiffness may be the only solution.

7.9.11 Plan Pile Resistance

The Bridge Plan General Notes shall list the Ultimate Bearing Capacity (Nominal Driving Resistance, R_{ndr}) in tons. This information is used by the contractor to determine the pile casing thickness and size the hammer to drive the piles. The resistance for several piers may be presented in a table as shown in Figure 7.9.11-1. If overdriving the piles is required to reach the minimum tip elevation, the estimated amount of overdriving (tons) shall be specified in the Special Provisions.

THE PILES SHALL BE DRIVEN TO AN ULTIMATE BEARING CAPACITY AS FOLLOWS:	
PIER NO.	**ULTIMATE BEARING CAPACITY (TONS)**
1	====
4	====

Figure 7.9.11-1

The total factored pile axial loading must be less than ϕR_n for the pile design. Designers should note that the driving resistance might be greater than the design loading for liquefied soil conditions. This is not an overdriving condition. This is due to the resistance liquefied soils being ignored for design, but included in the driving criteria to place the piles.

7.10 Concrete-Filled Steel Tubes

7.10.1 Scope

This section shall be taken to supersede AASHTO LRFD and AASHTO Seismic requirements for concrete-filled steel tubes (or pipes). The use of concrete-filled steel tubes (CFST) and reinforced concrete-filled steel tubes (RCFST) requires approval from the WSDOT Bridge Design Engineer when used as a ductile element as part of an earthquake-resisting system.

For a given diameter, CFST and RCFST have been shown to offer strength and stiffness beyond a conventional reinforced concrete (RC) member. And recent research has shown that CFST members can sustain large cyclic drifts with minimal damage. The design methods herein regarding concrete-filled steel tubes are largely based on study, testing and recommendations compiled by the University of Washington (UW).

The concrete for CFST members tested at the UW was a low-shrinkage, self-consolidating concrete. The nominal concrete strengths were 6 ksi and 10 ksi. This represents structural concrete with a minimum specified strength of 4 ksi, and an expected strength 25 percent to 50 percent larger.

Prior CALTRANS and ARMY research programs studied fully restrained connections for CFST pier to foundation connections. Two of those connections are further discussed in this chapter and are shown in the Figure below. The first CFST-to-cap connection type involves an annular ring attached to the top of the CFST, and is partially embedded into the pile cap. This anchored connection resists flexural loading from the pile through strutting action to the bottom of the pile cap (resulting from the portion of tube of the CFST that is in tension) and the top of the pile cap (resulting from the portion of tube of the CFST column that in compression). The tests show this connection is both simple to construct and fully effective in transferring flexure. The current ACI procedure (ACI 318-2011) was recommended by the UW as a conservative approach to design against punching shear in this type of connection.

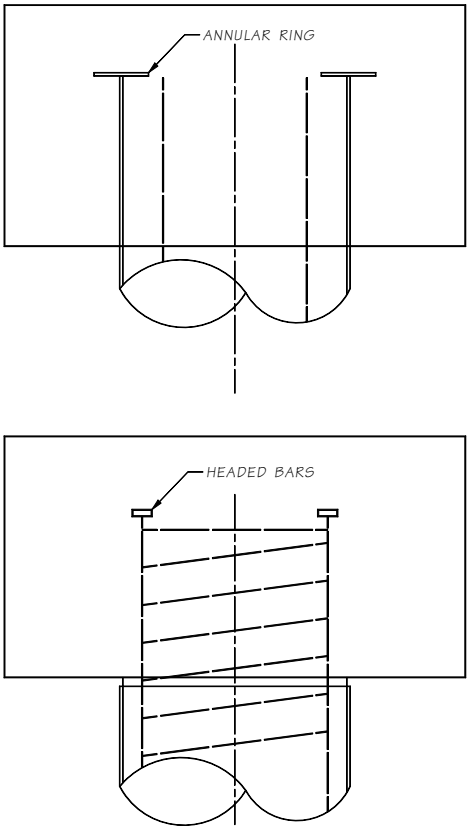

CFST Column-to-Cap Connections
Figure 7.10.1-1

The second CFST-to-cap connection type requires a circular reinforcing cage with headed longitudinal bars that extend into the concrete cap. The CFST is discontinued just below the cap. This connection type is beneficial for plastic design in that it allows the designer some flexibility in the plastic demand that must be resisted by the cap. Refer to Section 7.10.4 for further discussion.

Transition connections between RC shafts and CFST shafts have not been tested, but considerable analysis has been performed at the UW. Models have been developed to predict the strength of RCFST members, and this RCFST behavior may be used to provide increased strength over a significant length of the pile relative to conventional RC construction. Overstrength factors for capacity protection design of adjacent members and joint shear design at connections were not addressed in the research.

7.10.2 Design Requirements

A. Materials

1. The concrete for CFST and RCFST shall be class 5000P.
2. Steel tubes shall conform to one of the following:
   i. API 5L Grade X42 or X52 for longitudinal seam welded or helical (spiral) seam submerged-arc welded tube
   ii. ASTM A 252 Grade 2 or 3 for longitudinal seam welded or helical (spiral) seam submerged-arc welded tube
   iii. ASTM A 572 or ASTM A 588 for longitudinal seam welded tube
3. When a CFST or RCFST will be used as an earthquake resisting element and is expected to develop a plastic hinge, the steel tubes shall be fabricated from steel meeting the mechanical and chemistry requirements of AASHTO M 270 GR 50 (ASTM A 709 GR 50) regardless of fabrication method.
4. For capacity protected members at the extreme event limit state, expected material properties may be used to determine the expected nominal moment capacity. The expected yield strength, F_{ye}, for steel tubes shall be taken as $1.1F_y$.

B. Limit States

For strength limit states, the resistance factors for axial load effects on CFST shall be taken per AASHTO LRFD for tension- and compression- controlled reinforced concrete sections. The resistance factor for flexure shall be taken as 0.9. The resistance factor for shear shall be taken as 0.85. For extreme event limit states, resistance factors shall be taken as 1.0.

C. General Dimensions

The minimum tube wall thickness shall not be taken less than 3/8 inch at the time of installation. To develop the full plastic capacity of CFST or RCFST members, it is necessary to ensure that local buckling does not occur prior to development of the strength of the tube. Therefore the following *D/t* limits are recommended:

1. For members subjected to elastic forces:
$$\frac{D}{t} \leq 0.22\frac{E}{F_y} \qquad (7.10.2\text{-}1)$$
2. For members subjected to plastic forces::
$$\frac{D}{t} \leq 0.15\frac{E}{F_y} \qquad (7.10.2\text{-}2)$$

Where D is the outside diameter of the tube (in.), and t is the wall thickness of the tube (in.).

D. Stiffness

The effective stiffness, EI_{eff}, of circular CFST, as defined in Equation 7.10.2-3, shall be used to evaluate deflections, deformations, buckling resistance, and moment magnification. The effective stiffness factor, C', is defined in Equation 7.10.2-4.

$$EI_{eff} = E_s I_S + C' E_c I_c \quad (7.10.2\text{-}3)$$

$$C' = 0.15 + \frac{P}{P_0} + \frac{A_s}{A_s + A_c} \leq 0.9 \quad (7.10.2\text{-}4)$$

P_0 is the nominal compressive resistance (crushing load) without moment, P is the factored axial load effect, and A_s is the combined area of the steel tube and steel reinforcing.

E. Flexure and Axial Resistance

The flexural strength of CFST and RCFST members may be determined using the plastic stress distribution method (PSDM). The appropriate limit state stresses and geometry is shown in Figure 7.10.2-1.

Solutions for the interaction diagrams can be developed using parametric equations for $P(y)$ and $M(y)$ where y is the distance from the centroid to the neutral axis. A positive value of P is a net compressive force. M and y are positive with the sign convention shown in Figure 7.10.2-1. The parameter y varies between plus and minus r_i, where r_i is the radius of the concrete core.

Stress is assumed to be plastically developed over the following regions of the section:

A_{cc} = area of concrete effective in compression
A_{sc} = area of the steel tube in compression
A_{st} = area of the steel tube in tension
A_{bc} = area of the internal steel reinforcing in compression
A_{bt} = area of the internal steel reinforcing in tension

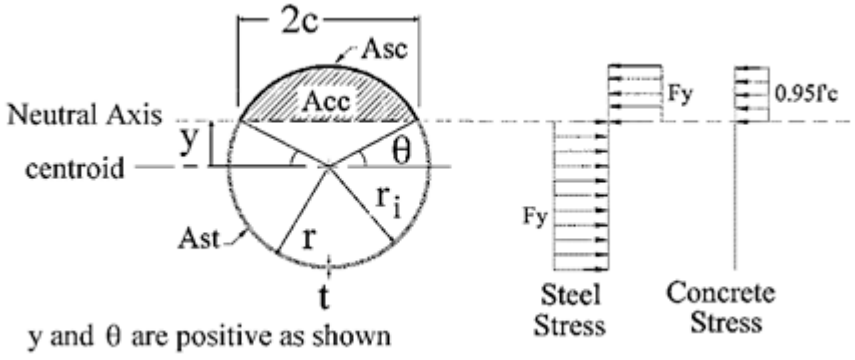

Plastic Stress Distribution Method
Figure 7.10.2-1

Alternatively, a strain-compatibility analysis can be performed with appropriate plastic stress-strain relationships.

1. **CFST Interaction** – A parametric solution for the nominal interaction diagram can be developed using Figure 7.10.2-2 and Equations 7.10.2-5 through 7.10.2-9. Figure 7.10.2-2b also shows normalized interaction curves for various D/t ratios.

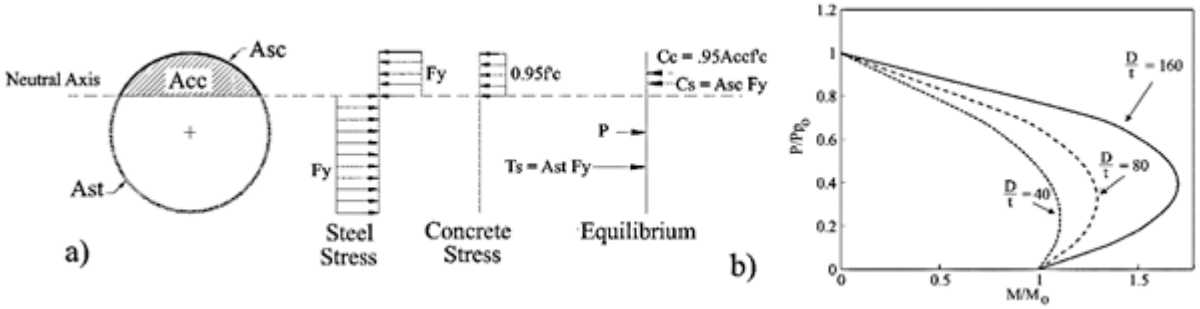

Plastic Stress Distribution for CFST
Figure 7.10.2-2

$$P_n(y) = \left(\left(\frac{\pi}{2} - \theta\right) {r_i}^2 - yc\right) * 0.95{f'}_c - 4\theta t r_m F_y \quad (7.10.2\text{-}5)$$

$$M_n(y) = \left(c({r_i}^2 - y^2) - \frac{c^3}{3}\right) * 0.95{f'}_c + 4ct\frac{{r_m}^2}{r_i}F_y \quad (7.10.2\text{-}6)$$

$$c = r_i cos\theta \quad (7.10.2\text{-}7)$$

$$\theta = sin^{-1}\left(\frac{y}{r_m}\right) \quad (7.10.2\text{-}8)$$

$$r_m = r - \frac{t}{2} \quad (7.10.2\text{-}9)$$

2. **RCFST Interaction** – A parametric solution for the nominal interaction diagram can be developed using Figure 7.10.2-3 and Equations 7.10.2-7 through 7.10.2-14. The internal steel reinforcing is idealized as a thin ring.

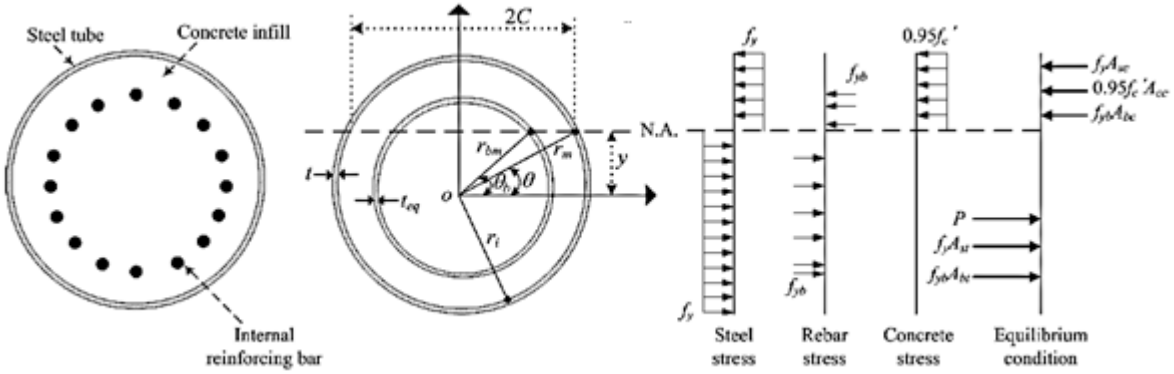

Plastic Stress Distribution for RCFST
Figure 7.10.2-3

$$P_n(y) = \left(\left(\frac{\pi}{2} - \theta\right) {r_i}^2 - yc\right) * 0.95{f'}_c - 4\theta t r_m F_y - t_b r_{bm}\left(4\theta_b F_{yb} + (\pi - 2\theta_b)0.95{f'}_c\right) \quad (7.10.2\text{-}10)$$

$$M_n(y) = \left(c({r_i}^2 - y^2) - \frac{c^3}{3}\right) * 0.95{f'}_c + 4ct\frac{{r_m}^2}{r_i}F_y + 4t_b r_{bm} c_b (F_{yb} - 0.95{f'}_c) \quad (7.10.2\text{-}11)$$

$$c_b = r_b cos\theta_b \quad (7.10.2\text{-}12)$$

$$\theta_b = sin^{-1}\left(\frac{y}{r_{bm}}\right) \quad (7.10.2\text{-}13)$$

$$t_b = \frac{nA_b}{2\pi r_{bm}} \quad (7.10.2\text{-}14)$$

The associated variables are defined as:

- r = radius to the outside of the steel tube (in)
- r_i = radius to the inside of the steel tube (in)
- r_m = radius to the center of the steel tube (in)
- r_{bm} = radius to the center of the internal reinforcing bars (in)
- t = wall thickness of the tube (in)
- t_b = wall thickness of a notional steel ring equivalent to the internal reinforcement (in)
- c = one half the chord length of the tube in compression (in)
- c_b = one half the chord length of a notional steel ring equivalent to the internal reinforcement in compression (in)
- θ = angle used to define c (rad.)
- θ_b = angle used to define c_b (rad.) θ_b shall be taken as $\pi/2$ if y/r_b is greater than 1 and θ_b shall be taken as $-\pi/2$ if y/r_b is less than -1.
- A_b = area of a typical steel bar comprising the internal reinforcement (in^2)
- n = number of internal steel reinforcing bars

The requirements of AASHTO Seismic 8.16.2 for piles with permanent steel casing shall be applied to RCFST. Accordingly, the extent of longitudinal reinforcement may be reduced to only the upper portion of the member as needed to provide the required resistance of the member.

For CFST and RCFST, the area of the steel casing shall be included in the determination of the longitudinal reinforcement ratio. For RCFST, the minimum required longitudinal reinforcement ratio may be reduced to 0.005.

A. Stability Considerations for Unbraced of Partially-braced Members

Piles and shafts are typically assumed to be continually braced by the surrounding soil. Therefore they are not normally subject to P-Δ effects or other secondary effects. However, it is recognized that special circumstances such as scour, soil liquefaction, piles used in marine structures, or other conditions may leave piles and shafts subject to less than full bracing. In these circumstances, it may be necessary to consider stability effects.

B. Shear Resistance

The shear resistance of CFST and RCFST shall be taken as:

$$V_u = \phi V_n = \phi g_4 \left[g_1 \left(0.6 f_y g_2 A_s \right) + 0.0316 g_3 A_c \sqrt{f_c'} \right] \quad (7.10.2\text{-}15)$$

Where:

A_s = *cross-sectional area of the steel tube*
A_c = *area of concrete within the steel tube*
g_1 = *coefficient for the shear capacity of the steel tube = 2.0*
g_2 = *coefficient for the effective shear area of steel tube = 0.5*
g_3 = *coefficient for the effect on concrete strength in shear due to confinement from the steel tube = 3.0*
g_4 = *coefficient for bond development between the concrete and steel tube = 1.0*

The value of 1.0 for term g_4 is based on the assumption that the tube is fully developed as a composite section with the concrete and should be at least one diameter, D, from the point of maximum moment. If this condition is not satisfied, a reduction in g4 may be required.

Equation 7.10.2-15 does not account for the influence of axial load on shear capacity. An alternate equation is presented in the UW research that accounts for axial load and can be utilized at the designer's discretion.

C. Corrosion

The design wall thickness for tubes shall be reduced for corrosion over a 75-year minimum design life. Minimum corrosion rates are specified below, except that the design thickness loss due to corrosion shall not be taken to be less than 1/16 inch.

Soil embedded zone (undisturbed soil):	0.001 inch per year
Soil embedded zone (fill or disturbed soils):	0.003 inch per year
Immersed Zone (fresh water):	0.002 inch per year
Immersed and Tidal Zone (salt water):	0.004 inch per year
Splash Zone (salt water):	0.006 inch per year
Atmospheric Zone:	0.004 inch per year

The corrosion rates are taken from July 2008 CALTRANS memo to Designers 3-1, FHWA NHI-05-042 Design and Construction of Driven Pile Foundations, and the *Ferries Terminal Design Manual*.

The rates for corrosion in soil above assume that the soil is not highly corrosive. A site-specific assessment should be considered where a corrosive soil environment is suspected or known to exist. The potential for scour shall be considered when choosing a design corrosion rate.

7.10.3 CFST-to-Cap Annular Ring Connections

CFST-to-cap connections shall be designed as fully-restrained connections capable of resisting all load effects. The preferred connection to a concrete cap includes an annular ring at the top of the embedded tube. The connection design involves:

- Design of the annular ring
- Determination of the embedment depth
- A punching shear evaluation in the cap
- General design of the cap for flexure and shear

  An alternative to the annular ring connection involves using a conventional reinforcing cage to splice the CFST to the cap.
- Reinforced concrete connection design

A. Annular Ring

An annular ring shall be welded to the end of the tube to provide anchorage and stress distribution, as shown in Figure 7.10.3-1. The ring shall be made of a steel of the same thickness and grade as the steel tube. The ring shall extend outside and inside the tube a distance of 8*t*, where t is the thickness of the tube.

The ring shall have 1" diameter vent holes near the connection to the CFST to ensure concrete consolidation under the annular ring. There shall be a minimum of 4 holes equally spaced on the ring both outside the tube and inside the tube as shown in Figure 7.10.3-1.

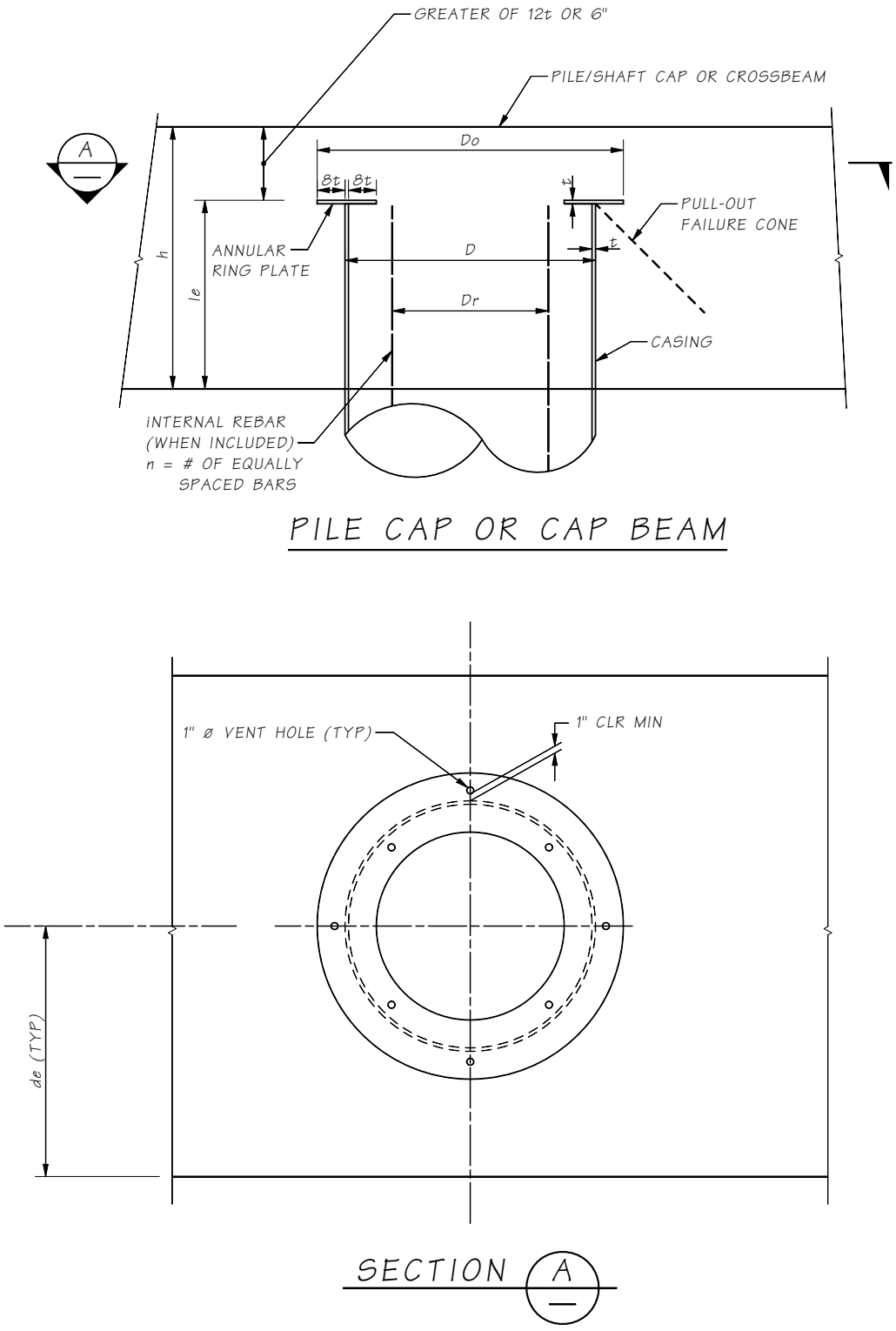

Annular Ring Connections

Figure 7.10.3-1

The ring shall be welded to the tube with complete joint penetration (CJP) welds or fillet welds on both the inside and outside of the tube. The fillet welds must be capable of developing the full tensile capacity of the tube. For this purpose, the minimum size, w, of the fillet welds shall be taken as:

$$w \geq \frac{1.47 F_u t}{F_{exx}} \qquad (7.10.3\text{-}1)$$

Where F_u is the specified minimum tensile strength of the tube steel (ksi), and F_{exx} is the classification strength of the weld metal (ksi). The fillet weld size equation is based on AASHTO and does not include the effects of loading direction. To further refine the weld size requirements to include loading direction, refer to the AISC *Steel Construction Manual*. Typical CFST weld details are shown in Figure 7.10.3-2.

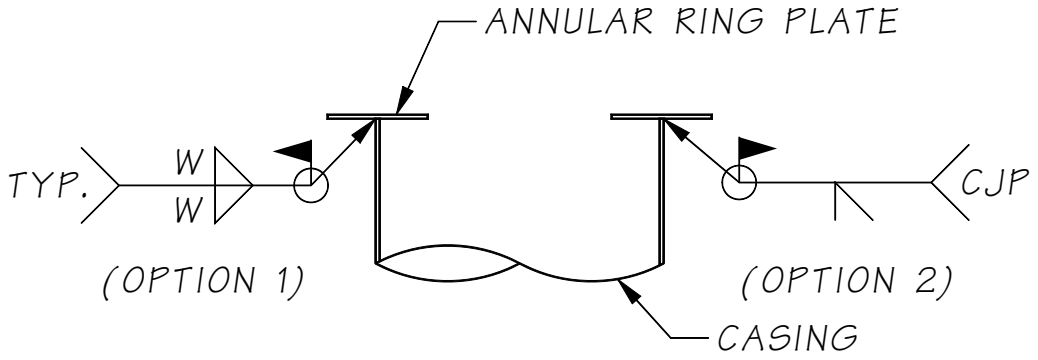

OPTION 1 AND OPTION 2

W - SIZE WELDS TO DEVELOP
FULL CAPACITY OF CASING WALL

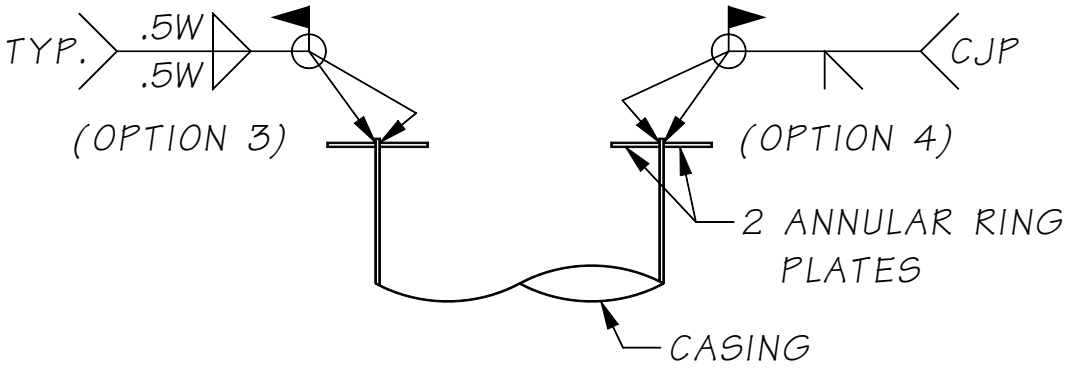

OPTION 3 AND OPTION 4

NOTE: FOR OPTION 3, THE MINIMUM FILLET WELD SIZE SHALL BE LIMITED TO MINIMUM FILLET WELD SIZE PER AWS D1.1

Annular Ring Weld Detail
Figure 7.10.3-2

B. Embedment

The tube and the annular ring shall be embedded into the pile cap a distance, le, as defined in the following equations. To develop the yield strength of the CFST and plastic behavior is not expected, then the embedment length shall satisfy:

$$l_e \geq \sqrt{\frac{{D_o}^2}{4} + \frac{3.95DtF_y}{\sqrt{f'_{cf}}}} - \frac{D_o}{2} \qquad (7.10.3\text{-}2)$$

To ensure full plastic behavior of the CFST, then the embedment length shall satisfy:

$$l_e \geq \sqrt{\frac{{D_o}^2}{4} + \frac{5.27DtF_u}{\sqrt{f'_{cf}}}} - \frac{D_o}{2} \qquad (7.10.3\text{-}3)$$

Where f'_{cf} (ksi) is the specified 28-day compressive strength of the cap, D_o is the outside diameter of the annular ring as shown in Figure 7.10.3-1. This embedment length will develop the full plastic capacity of the CFST. As part of the displacement based design of the structure, hinge lengths and strain limits will need to be defined for the CFST. Values for the hinge length and strain limits have not been well documented in the research, however for steel casing fabricated from ASTM A 709 GR 50 steel, an assumed hinge length of one diameter, D, and reduced ultimate tensile strain of 0.13 may be used.

C. Punching Shear

The pile cap shall have adequate concrete depth, h, to preclude punching through the pile cap. The value of h shall satisfy:

$$h \geq \sqrt{\frac{D^2}{4} + \frac{1.68C_{max}}{\sqrt{f'_{cf}}}} - \frac{D}{2} \qquad (7.10.3\text{-}4)$$

In addition to the total cap depth requirement, h, a minimum of 12t or 6", whichever is greater, shall be provided above the annular ring. A layer of longitudinal reinforcement above the annular ring shall be provided to engage the punching shear strut forces.

Where the total compressive force of the couple, C_{max}, shall be taken as:

$$C_{max} = C_c + C_s \qquad (7.10.3\text{-}5)$$

C_c and C_s are the compression forces in the concrete and the steel due to the combined bending and axial load as computed by the plastic stress distribution method for the most extreme load effect at the appropriate limit state.

D. Pile Cap and/or Cap Beam Reinforcement

The pile cap should follow conventional design practice and must be adequate to sustain the foundation design loads. However, the concrete cap thickness shall be large enough to preclude punching shear and cone pullout of the CFST piles.

The edge distance shall be large enough to accommodate concrete struts originating at the base of the ring. The minimum edge distance, d_e, measured from center-of-tube to the edge of the cap shall be taken as:

$$d_e \geq D \tag{7.10.3-6}$$

CFSTs shall be adequately spaced to avoid intersecting concrete struts. The cap shall be designed to resist all flexural load effects. The flexural reinforcement in both directions shall be spaced uniformly across the length and width of the cap, but the bottom mat of flexural reinforcement will be interrupted by the concrete tube. The interrupted bars shall be provided, but they shall not be relied on to contribute to the flexural resistance of the cap. Figure 7.10.3-3 shows the configuration of the longitudinal reinforcing where it conflicts with the steel tube. Standard 90° hooks shall be used.

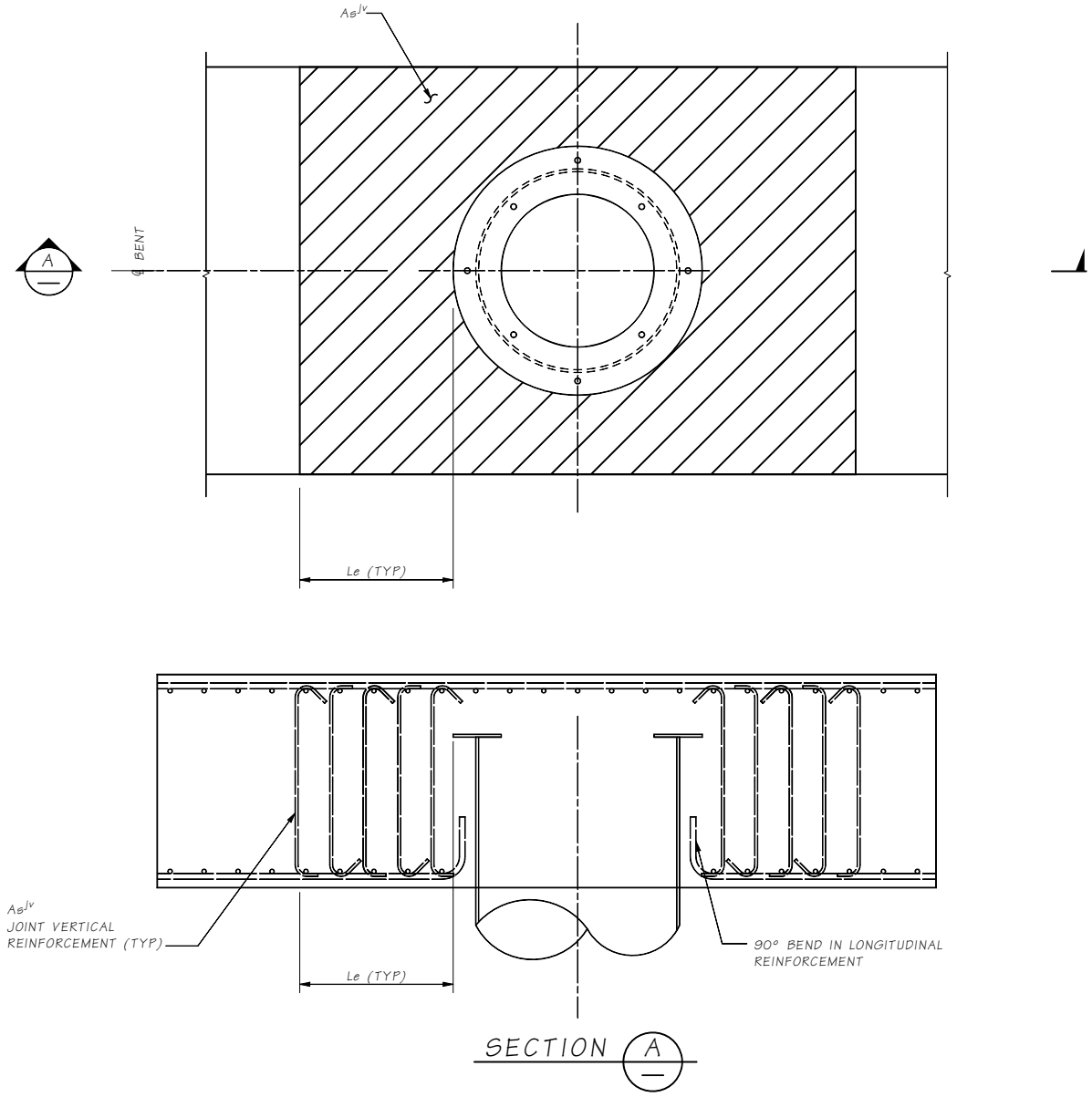

Reinforcement Detail at Cap Connection
Figure 7.10.3-3

The cap shall be designed to resist all shear load effects. Note that the minimum required embedment results in an average shear stress in the critical area surrounding the tube of $6\sqrt{f'_c}$ (psi). Assuming the concrete is capable of resisting a shear stress of approximately $2\sqrt{f'_c}$, vertical reinforcement will be required to resist an average shear stress of approximately $4\sqrt{f'_c}$. Additional requirements for shear demand resulting from other load combinations must also be considered.

Vertical ties shall be provided within the anchorage regions such that vertical ties intersect the pull-out cone on each side of the CFST subject to shear. The vertical reinforcing, A_s^{jv}, shall be included according to Equation 7.10.3-7 where Ast is the total area of the steel tube embedded into the cap. This value provides a conservative amount of vertical reinforcing steel and satisfies the $4\sqrt{f'_c}$ requirement.

$$A_s{}^{jv} = 0.65A_{st} \qquad (7.10.3\text{-}7)$$

7.10.4 CFST-to-Cap Reinforced Concrete Connections

A circular reinforcing with headed longitudinal bars may be used to connect a CFST member to a concrete cap, where the steel casing is discontinued just below the cap. Terminating the steel casing below the cap, as opposed to terminating at the bottom of the cap or just inside the cap, reduces the chances of concrete spalling at relatively low demands. The reinforcing cage shall satisfy all of the requirements for a reinforced concrete connection, as well as the additional requirements in this section.

A. CFST Requirements

A steel ring shall be welded to the inside of the steel casing 3" below the top of casing to aid in transfer of forces from the reinforcement cage to the steel casing. A square bar the size of the steel casing wall thickness is sufficient. The bar may be continuous or consist of discontinuous segments, however the total length shall be at least 75% of the steel casing circumference and shall be equally distributed. Transverse reinforcing shall be used and shall extend into the concrete cap.

B. Embedment and Concrete Cover

The minimum embedment length, l_e, of the reinforcing cage into the cap shall satisfy:

$$l_e \geq \frac{\psi_e F_{yb}}{2\sqrt{f'_{cf}}} d_b \qquad (7.10.4\text{-}1)$$

$$l_e \geq \sqrt{\frac{D^2}{4} + \frac{2F_{yb}A_{st}}{\sqrt{f'_{cf}}}} - \frac{D}{2} \qquad (7.10.4\text{-}2)$$

Where ψ_e is a coating factor, which shall be taken as 1.0 for uncoated bars, and 1.2 for epoxy-coated bars.

The reinforcing cage shall extend into the CFST at least a distance of $2l_d$ below the top of the steel casing, where l_d is the development length of the longitudinal reinforcing as defined in AASHTO.

The concrete cover above headed longitudinal reinforcing shall exceed $3d_h$, where d_h is the diameter of the head. The concrete side cover adjacent to a head shall exceed d_h. When headed bars are not used, the development of longitudinal reinforcement into the cap shall be as specified in AASHTO LRFD or AASHTO Seismic, as appropriate.

C. Pile Cap and/or Cap Beam Reinforcement

The pile cap should follow conventional design practice and must be adequate to sustain the foundation design loads. Joint reinforcement shall follow the requirements of the AASHTO Guide Specifications.

7.10.5 RCFST-to-Column and CFST-to Column Connections

Direct RCFST-to-column connections shall be designed as fully-restrained connections capable of resisting all load effects. The recommended RCFST shaft to reinforced concrete column connection is shown in Figure 7.10.4-1.

All column reinforcement shall be extended into the RCFST shaft for a length greater than or equal to the length required for noncontact lap splices between columns and shafts. The contribution of steel casing to the structural resistance of RCFST's varies from zero at the end of the tube to fully composite at the end of the transition zone. The transition zone length may be taken as 1.0D. The use of slip casing in determining the resistance for RCFST shafts is not permitted.

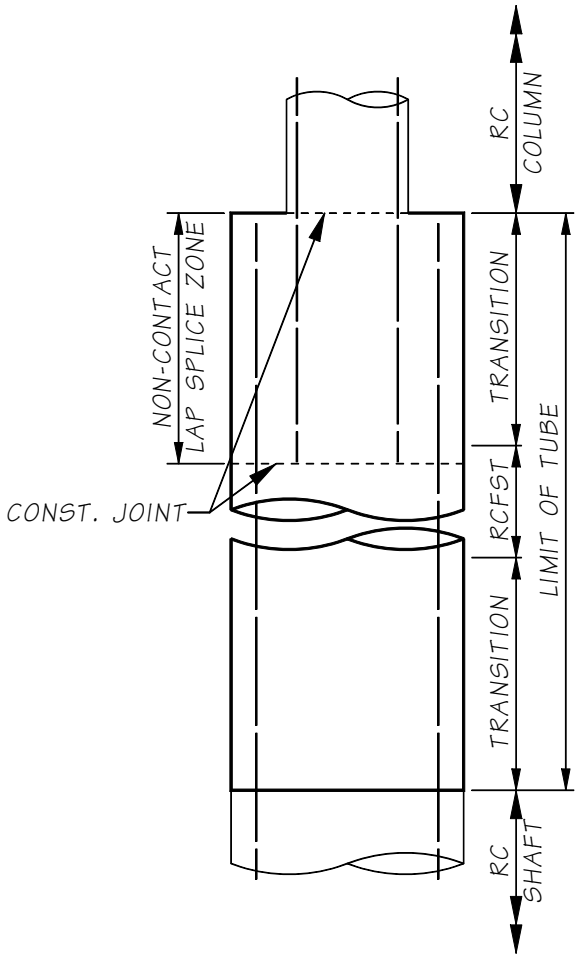

RCFST-to-Column Connection
Figure 7.10.5-1

CFST-to column connections do not require additional reinforcement within the shaft. However, the concrete within the shaft does require testing. A cage may be installed to support the CSL tubes or thermal integrity wire that is required. A steel ring shall be welded to the inside of the steel casing 3" below the top of casing to aid in transfer of forces from the column reinforcement cage to the steel casing. See Section 7.10.4A for steel ring requirements.

All column reinforcement shall be extended into the CFST shaft the maximum of 0.5D (shaft diameter) plus the column reinforcement development length and 1.0D.

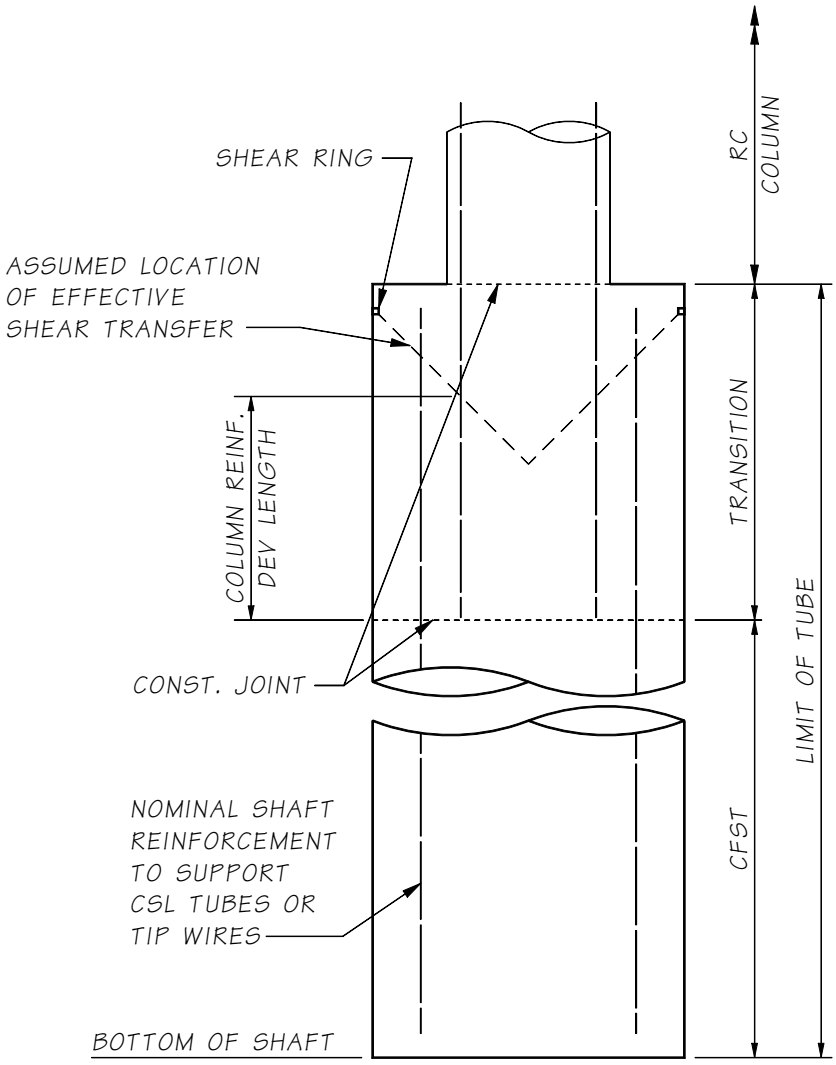

CFST-to Column Connection
Figure 7.10.5-2

7.10.6 Partially-filled CFST

The use of partially-filled steel tubes for bridge foundations requires the approval of the WSDOT Bridge Design Engineer, and will only be used where conventional CFST members are grossly uneconomical or unconstructible.

Design zones of partially filled steel piles and shafts are shown in Figure 7.10.5-1. Longitudinal and transverse reinforcement shall extend to at least the first point of zero moment along the member under the peak loading condition.

Crosshole sonic log (CSL) testing or thermal integrity profiling (TIP) shall be performed in accordance with *Standard Specifications* Section 6-19.3(9). CSL tubes or thermal wires shall extend to the bottom of concrete.

Corrosion losses shall be considered on each exposed surface of the steel tube.

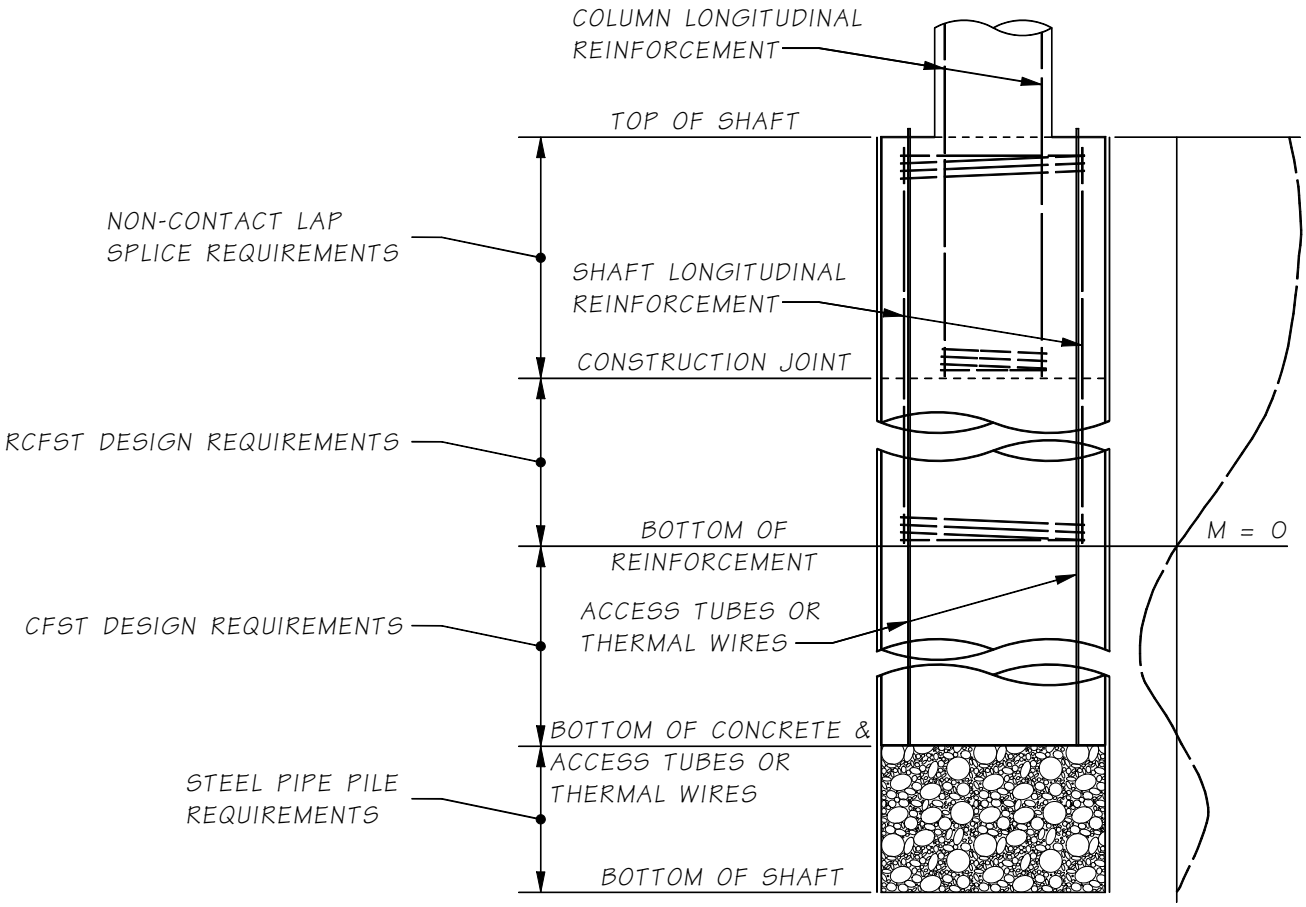

Partially-filled CFST
Figure 7.10.6-1

7.10.7 Construction Requirements

For CFSTs with tubes installed open-ended, the insides of the tube shall be excavated and then cleaned with an appropriate tool to remove all adhering soil and other material. When excavating, a nominal plug of soil shall be left at the bottom of the pile as determined by the Geotechnical Engineer. The Geotechnical Engineer shall be consulted to determine the method for computing axial compressive and uplift (if applicable) capacities of the CFSTs during design. In addition, the method for accepting CFSTs during construction, if installed as a driven pile, will need to be recommended by the Geotechnical Engineer. When driving an open ended pile, the total resistance obtained consists of a contribution from end bearing, external side friction, and internal side friction. Also, depending on the pile diameter and soil conditions, the pile could drive with or without a soil plug. When excavating the soil from inside of an open-ended driven pile, the resistance can be altered from the as-driven condition due to loss of internal side friction. All of these factors need to be considered during the design and shall be based on recommendations from the Geotechnical Engineer. Open-ended CFSTs installed using techniques similar to a drilled shaft shall be designed and constructed as a drilled shaft. Closed-ended CFSTs driven as a pile may be designed and accepted in the field similar to a closed-ended steel pile.

Welding for ASTM A 252 pipe shall conform to AWS D1.1/D1.1M, latest edition, Structural Welding Code, except that all weld filler metal shall be low hydrogen material selected from Table 4.1 in AASHTO/AWS D1.5M/D1.5:2010 *Bridge Welding Code*. All seams and splices shall be complete penetration welds.

Welding and joint geometry for the seam shall be qualified in accordance with AWS D1.1/D1.1M, latest edition, Structural Welding Code. The Contractor may submit documentation of prior qualification to the Engineer to satisfy this requirement.

For the fabrication of helical (spiral) seam submerged-arc welded pipe piles, the maximum radial offset of strip/plate edges shall be ⅛ inch. The offset shall be transitioned with a taper weld and the slope shall not be less than a 1-to-2.5 taper. The weld reinforcement shall not be greater than 3⁄16 inches and misalignment of weld beads shall not exceed ⅛ inch.

If spirally welded pipe piles are allowed, skelp splices shall be located at least 1′-0″ away from the annular ring.

Nondestructive evaluation (NDE) requirements for field welded splices shall be identified on the plans. The location of splices and NDE requirements shall be divided into 3 possible zones as determined by the Engineer:

1. No splices permitted – highly stressed areas
2. Splices permitted with 100 percent UT and visual inspection – moderately stressed areas
3. Splices permitted with 100 percent visual inspection – low stressed areas

7.10.8 Notation

A_b = area of a single bar for the internal reinforcement (in^2)
A_c = net cross-sectional area of the concrete (in^2)
A_g = cross-sectional area of the steel tube (in^2)
A_s = cross-sectional area of the steel tube and the longitudinal internal steel reinforcement (in^2)
c = one half the chord length of the tube in compression (in)
c_b = one half the chord length of a notional steel ring equivalent to the internal reinforcement in compression (in)
D = outside diameter of the tube (in.)
D_o = outside diameter of the annular ring (in.)
d_b = nominal diameter of a reinforcing bar (in)
d_e = minimum edge distance from center of CFST to edge of cap (in)
d_f = depth of cap (in)
E_c = elastic modulus of concrete (ksi)
EI_{eff} = effective composite flexural cross-sectional stiffness of CFST or RCFST (k-in^2)
E_s = elastic modulus of steel (ksi)
F_{exx} = classification strength of weld metal (ksi)
F_u = specified minimum tensile strength of steel (ksi)
F_y = specified minimum yield strength of steel (ksi)
F_{yb} = specified minimum yield strength of reinforcing bars used for internal reinforcement (ksi)

f_c' = minimum specified 28-day compressive strength of concrete (ksi)
f'_{cf} = minimum specified 28-day compressive strength of concrete in a cap or footing (ksi)
g_1 = coefficient for the shear capacity of the steel tube
g_2 = coefficient for the effective shear area of steel tube
g_3 = coefficient for the effect on concrete strength in shear due to confinement from the steel tube
g_4 = coefficient for bond development between the concrete and steel tube
h = cap depth above the CFST required to resist punching shear in a cap (in)
I_c = uncracked moment of inertial of the concrete about the centroidal axis (in^4)
I_s = moment of inertia of the steel tube and the longitudinal internal steel reinforcement about the centroidal axis (in^4)
l_e = Required embedment length for CFST embedded in a concrete cap (in)
M(y) = nominal moment resistance as a function of the parameter y (kip-in)
Mo = plastic moment resistance of members without axial load (kip-in)
n = number of equally spaced longitudinal internal steel reinforcement
$P(y)$ = nominal compressive resistance as function of the parameter y (kips)
P_u = factored axial load acting on member (kip)
P_o = compressive resistance of a member without consideration of flexure (kips)
r = radius to the outside of the steel tube (in)

7.11 Bridge Standard Drawings

7.3-A1-1 Column Silo Cover

7.8-A1-1 Typical Shaft Details

7.12 Appendices

Appendix 7.3-A2	Noncontact Lap Splice Length Column to Shaft Connections
Appendix 7-B1	Linear Spring Calculation Method II (Technique I)
Appendix 7-B2	Pile Footing Matrix Example Method II (Technique I)
Appendix 7-B3	Non-Linear Springs Method III

Column Diameter (ft)	Shaft Diameter (ft)	Column Longitudinal Bar Size							
		#6	#7	#8	#9	#10	#11	#14	#18
		Basic Lap Splice Length, L_s (in)							
		36.7	42.8	49.0	55.2	62.2	69.0	82.9	110.5
		Minimum Noncontact Lap Splice Length, $L_{ns} = L_s + s$							
3'-0"	5.5 *	4'-6"	5'-0"	5'-6"	6'-6"	7'-0"	7'-6"	8'-6"	11'-0"
	6.0	5'-0"	5'-6"	6'-0"	6'-6"	7'-0"	7'-6"	9'-0"	11'-0"
	6.5	5'-0"	5'-6"	6'-0"	7'-0"	7'-6"	8'-0"	9'-0"	11'-6"
	7.0	5'-6"	6'-0"	6'-6"	7'-0"	7'-6"	8'-0"	9'-6"	11'-6"
	8.0	6'-0"	6'-6"	7'-0"	7'-6"	8'-0"	8'-6"	10'-0"	12'-0"
3'-6"	6.0 *	4'-6"	5'-0"	5'-6"	6'-6"	7'-0"	7'-6"	8'-6"	11'-0"
	6.5	5'-0"	5'-6"	6'-0"	6'-6"	7'-0"	7'-6"	9'-0"	11'-0"
	7.0	5'-0"	5'-6"	6'-0"	7'-0"	7'-6"	8'-0"	9'-0"	11'-6"
	8.0	5'-6"	6'-0"	6'-6"	7'-6"	8'-0"	8'-6"	9'-6"	12'-0"
	9.0	6'-0"	6'-6"	7'-0"	8'-0"	8'-6"	9'-0"	10'-0"	12'-6"
4'-0"	6.5 *	4'-6"	5'-0"	5'-6"	6'-6"	7'-0"	7'-6"	8'-6"	11'-0"
	7.0	5'-0"	5'-6"	6'-0"	6'-6"	7'-0"	7'-6"	9'-0"	11'-0"
	8.0	5'-6"	6'-0"	6'-6"	7'-0"	7'-6"	8'-0"	9'-6"	11'-6"
	9.0	6'-0"	6'-6"	7'-0"	7'-6"	8'-0"	8'-6"	10'-0"	12'-0"
	9.5	6'-0"	6'-6"	7'-0"	8'-0"	8'-6"	9'-0"	10'-0"	12'-6"
4'-6"	7.0 *	4'-6"	5'-0"	5'-6"	6'-6"	7'-0"	7'-6"	8'-6"	11'-0"
	8.0	5'-0"	5'-6"	6'-0"	7'-0"	7'-6"	8'-0"	9'-0"	11'-6"
	9.0	5'-6"	6'-0"	6'-6"	7'-6"	8'-0"	8'-6"	9'-6"	12'-0"
	9.5	6'-0"	6'-6"	7'-0"	7'-6"	8'-0"	8'-6"	10'-0"	12'-0"
	10.0	6'-0"	6'-6"	7'-0"	8'-0"	8'-6"	9'-0"	10'-0"	12'-6"
5'-0"	8.0 *	5'-0"	5'-6"	6'-0"	6'-6"	7'-0"	7'-6"	9'-0"	11'-0"
	9.0	5'-6"	6'-0"	6'-6"	7'-0"	7'-6"	8'-0"	9'-6"	11'-6"
	9.5	5'-6"	6'-0"	6'-6"	7'-6"	8'-0"	8'-6"	9'-6"	12'-0"
	10.0	6'-0"	6'-6"	7'-0"	7'-6"	8'-0"	8'-6"	10'-0"	12'-0"
	11.0	6'-6"	7'-0"	7'-6"	8'-0"	8'-6"	9'-0"	10'-6"	12'-6"
5'-6"	8.0 *	4'-6"	5'-0"	5'-6"	6'-6"	7'-0"	7'-6"	8'-6"	11'-0"
	9.0	5'-0"	5'-6"	6'-0"	7'-0"	7'-6"	8'-0"	9'-0"	11'-6"
	9.5	5'-6"	6'-0"	6'-6"	7'-0"	7'-6"	8'-0"	9'-6"	11'-6"
	10.0	5'-6"	6'-0"	6'-6"	7'-6"	8'-0"	8'-6"	9'-6"	12'-0"
	11.0	6'-0"	6'-6"	7'-0"	8'-0"	8'-6"	9'-0"	10'-0"	12'-6"
6'-0"	9.0 *	5'-0"	5'-6"	6'-0"	6'-6"	7'-0"	7'-6"	9'-0"	11'-0"
	9.5	5'-0"	5'-6"	6'-0"	7'-0"	7'-6"	8'-0"	9'-0"	11'-6"
	10.0	5'-6"	6'-0"	6'-6"	7'-0"	7'-6"	8'-0"	9'-6"	11'-6"
	11.0	6'-0"	6'-6"	7'-0"	7'-6"	8'-0"	8'-6"	10'-0"	12'-0"
	12.0	6'-6"	7'-0"	7'-6"	8'-0"	8'-6"	9'-0"	10'-6"	12'-6"

(Continued on following page)

Column Diameter (ft)	Shaft Diameter (ft)	Column Longitudinal Bar Size							
		#6	#7	#8	#9	#10	#11	#14	#18
		Basic Lap Splice Length, L_s (in)							
		36.7	42.8	49.0	55.2	62.2	69.0	82.9	110.5
		Minimum Noncontact Lap Splice Length, $L_{ns} = L_s + s$							
6'-6"	9.0 *	4'-0"	4'-6"	5'-0"	6'-0"	6'-6"	7'-0"	8'-0"	10'-6"
	9.5	4'-6"	5'-0"	5'-6"	6'-0"	6'-6"	7'-0"	8'-6"	10'-6"
	10.0	4'-6"	5'-0"	5'-6"	6'-6"	7'-0"	7'-6"	8'-6"	11'-0"
	11.0	5'-0"	5'-6"	6'-0"	7'-0"	7'-6"	8'-0"	9'-0"	11'-6"
	12.0	5'-6"	6'-0"	6'-6"	7'-6"	8'-0"	8'-6"	9'-6"	12'-0"
7'-0"	9.5 *	4'-0"	4'-6"	5'-0"	6'-0"	6'-6"	7'-0"	8'-0"	10'-6"
	10.0	4'-6"	5'-0"	5'-6"	6'-0"	6'-6"	7'-0"	8'-6"	10'-6"
	11.0	5'-0"	5'-6"	6'-0"	6'-6"	7'-0"	7'-6"	9'-0"	11'-0"
	12.0	5'-6"	6'-0"	6'-6"	7'-0"	7'-6"	8'-0"	9'-6"	11'-6"
7'-6"	10.0 *	4'-0"	4'-6"	5'-0"	6'-0"	6'-6"	7'-0"	8'-0"	10'-6"
	11.0	4'-6"	5'-0"	5'-6"	6'-6"	7'-0"	7'-6"	8'-6"	11'-0"
	12.0	5'-0"	5'-6"	6'-0"	7'-0"	7'-6"	8'-0"	9'-0"	11'-6"
8'-0"	11.0 *	4'-6"	5'-0"	5'-6"	6'-0"	6'-6"	7'-0"	8'-6"	10'-6"
	12.0	5'-0"	5'-6"	6'-0"	6'-6"	7'-0"	7'-6"	9'-0"	11'-0"
8'-6"	11.0 *	4'-0"	4'-6"	5'-0"	6'-0"	6'-6"	7'-0"	8'-0"	10'-6"
	12.0	4'-6"	5'-0"	5'-6"	6'-6"	7'-0"	7'-6"	8'-6"	11'-0"

Notes:

1. All values based on normal weight concrete with $f'_c = 4.0$ ksi.

2. The basic splice length, L_s , is based on 1.7 times the tension development length L_d. L_d is calculated per Section 5.11.2.1.1 of the AASHTO LRFD Bridge Design Specifications 7th Edition, 2015 Interim Revisions. The 1.7 (Class C lap splice) factor was maintained for the basic splice length calculations to be consistent with the original TRAC research for noncontact lap splices. This table does not apply when column longitudinal bars are bundled.

3. Development lengths are based on uncoated deformed bars. For epoxy coated bars add $0.2*L_s$ or $0.5*L_s$ to L_{ns} depending on column bar spacing and clear cover. See AASHTO 5.11.2.1.2 for spacing and cover requirements.

4. The clearance between the column and shaft reinforcement, s, is based on an out-to-out dimension of the cages. Concrete cover to the column reinforcing is 2", and concrete cover to the shaft reinforcing is per Std. Spec. 6-19.3(5)C. Also, s has been increased by the allowable shaft construction tolerances in Std. Spec. 6-19.3(1)A. If an oversized cage is used in conjunction with an oversize casing, s may need to be increased further.

5. The reinforcement confinement factor, λ_{rc}, is assumed to be 0.4 for all cases and is based on the assumption that the column reinforcement is well confined with column transverse reinforcement, shaft transverse reinforcement, and in most cases a permanent shaft casing.

6. All noncontact splice lengths have been rounded up to the nearest 6".

* Minimum common shaft diameter for specified column diameter to meet minimum clearance and construction tolerances.

Method II (Technique I) - Matrix Coefficient Definitions

The stiffness matrix containing the spring values and using the standard coordinate system is shown in Figure 7-B1-1. The sign of all the terms must be determined based on the sign convention.

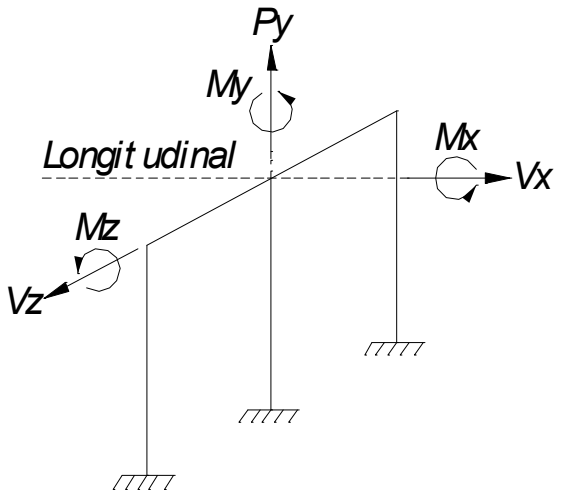

Global Coordinate System
Figure 7-B1-1

$$\begin{Bmatrix} & Vx & Py & Vz & Mx & My & Mz \\ Vx & K11 & 0 & 0 & 0 & 0 & K16 \\ Py & 0 & K22 & 0 & 0 & 0 & 0 \\ Vz & 0 & 0 & K33 & K34 & 0 & 0 \\ Mx & 0 & 0 & K43 & K44 & 0 & 0 \\ My & 0 & 0 & 0 & 0 & K55 & 0 \\ Mz & K61 & 0 & 0 & 0 & 0 & K66 \end{Bmatrix} \times \begin{Bmatrix} Disp. \\ \Delta x \\ \Delta y \\ \Delta z \\ \theta x \\ \theta y \\ \theta z \end{Bmatrix} = \begin{Bmatrix} Force \\ Vx \\ Py \\ Vz \\ Mx \\ My \\ Mz \end{Bmatrix}$$

Standard Global Matrix
Figure 7-B1-2

Where the linear spring constants or K values are defined as follows using the Global Coordinates:

K11 = $+V_{x(app)}/+\Delta_x$ = Longitudinal Lateral Stiffness (kip/in)
K22 = AE/L = Vertical or Axial Stiffness (k/in)
K33 = $-V_{z(app)}/-\Delta_z$ = Transverse Lateral Stiffness (k/in)
K44 = $+M_{x(app)}/+\theta_x$ = Transverse Bending or Moment Stiffness (kip-in/rad)
K55 = JG/L = Torsional Stiffness (kip-in/rad)
K66 = $+M_{z(app)}/+\theta_z$ = Longitudinal Bending or Moment Stiffness (kip-in/rad)
K34 = $-V_{z(ind)}/+\theta_x$ = Transverse Lateral Cross-couple term (kip/rad)
K16 = $+V_{x(ind)}/+\theta_z$ = Longitudinal Lateral Cross-couple term (kip/rad)
K43 = $+M_{x(ind)}/-\Delta_z$ = Transverse Moment Cross-couple term (kip-in/in)
K61 = $+M_{z(ind)}/+\Delta_x$ = Longitudinal Moment Cross-couple term (kip-in/in)

Fixed Head vs. Free Head Spring Calculations

Fixed Head

If the shear and moment are creating deflection in OPPOSING directions where the spring is located, a fixed head boundary condition is required to model the loaded foundation in a finite element model. See Figure 7-B1-3 for the fixed head coordinate system assumed in the following spring calculations.

Since applying load to a fixed end results in no reaction, a soil/structure interaction analysis will generally analyze the shear and moment simultaneously as a free head. Using the soil response results, a cross-couple correction term will be required in a FEM to produce the induced moment in the element modeling the fixed head condition. If accurate stresses in fixed head element are not required, the cross-couple term may be omitted.

There are two ways to model fixed head pile group. The most common method for a column footing is to use a group spring to model a group of piles or shafts as one set of springs. This method uses six linear springs to represent the foundation behavior. Lateral loads resisted by Cross-couples terms do not apply and individual pile loads must be calculated from the FEM results.

The second method would be to model the individual piles. This is more helpful for analyzing local stresses in the foundation cap element and for each pile. Cross-couple terms may be included and individual pile loads are generated in the FEM.

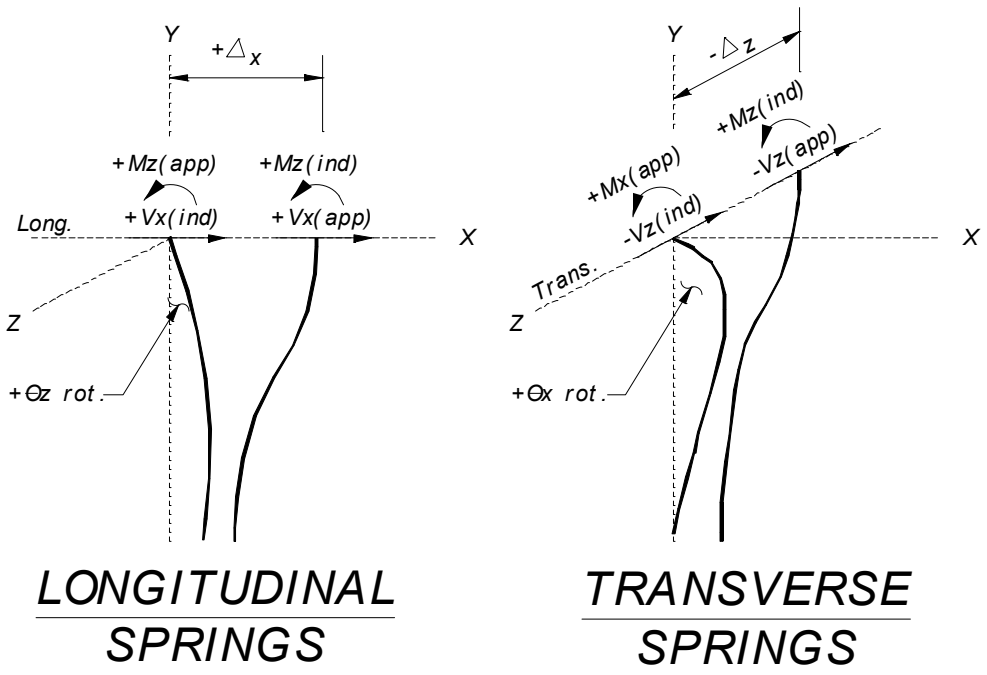

Fixed Head Coordinate System
Figure 7-B1-3

Free Head

If the shear and moment are creating deflection in the SAME direction where the spring is located, a free head boundary condition is required to model the loaded foundation in a finite element model. If a free head boundary condition is assumed Method II (Technique II) described in Section 7.2.5.

Vertical Springs (K22)

Vertical spring constants can be calculated from the following three assumptions. See Figure 7-B1-4 and the following definitions. REF: *Seismic Design of Highway Bridges Workshop Manual*, Pub. No. FHWA-IP-81-2, Jan 1981.

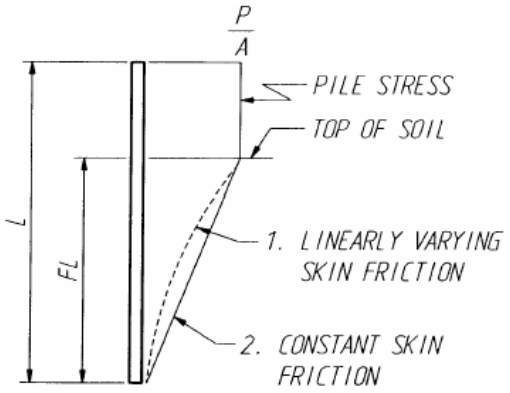

A = Cross-sectional area (in²)
E = Young's modulus (ksi)
L = Length of pile (in)
F = Fraction of pile embedded

Pile Stress
Figure 7-B1-4

Point Bearing Piles:

$$K22 = \frac{AE}{L}$$

Friction Piles with linearly varying skin friction:

$$K22 = \frac{AE}{\left(1-\frac{2F}{3}\right)L}, with\ F = 1.0\ (fully\ embedded), K22 = 3\frac{AE}{L}$$

Friction Piles with constant skin friction:

$$K22 = \frac{AE}{\left(1-\frac{F}{2}\right)L}, with\ F = 1.0\ (fully\ embedded), K22 = 2\frac{AE}{L}$$

Torsional Springs (K55)

In general, torsional spring constants for individual piles are based on the mechanics of the pile. The equation for torsional stiffness is given below.

$$K55 = \frac{M}{\varphi} = \frac{T}{\varphi} = \frac{JG}{L}$$

Where:

G = 0.4E
J = Torsional moment of inertia
L = Length of pile

Lateral Springs (K11 & K33)

A fixed head lateral spring can be found by applying the shear and axial load in a soil response program with the rotation at the top equal to zero and finding the lateral deflection that results. The spring value is the applied shear divided by the resulting deflection.

$$K11 = \frac{V_{x(app)}}{\Delta_x}\ (longitudinal) \qquad K33 = \frac{V_{z(app)}}{-\Delta_z}\ (transverse)$$

Rotational Springs (K44 & K66)

Ideally a fixed head boundary condition would result in no rotation. Therefore K44 and K66 would be infinitely stiff.

In the past, the fixed head rotational springs where found by applying the moment and axial load in a soil response program with the translation at the top equal to zero and finding the rotation that results. The spring value is the applied moment divided by the resulting rotation.

$$K66 = \frac{M_{z(app)}}{\theta_z}\ (longitudinal) \qquad K44 = \frac{MV_{x(app)}}{\theta_x}\ (transverse)$$

Cross-Couple Springs (K16, K34, K43 & K61)

Fixed Head

Cross-couple springs will not be symmetric for non-linear modeling foundation modeling. Since finite element programs will use matrix multiplication to generate reactions, doing the math is the easy way to show the effect of cross-couple terms. Note that K16 and K34 terms will have opposite signs.

$$\begin{Bmatrix} & Vx & Py & Vz & Mx & My & Mz \\ Vx & K11 & 0 & 0 & 0 & 0 & K16 \\ Py & 0 & K22 & 0 & 0 & 0 & 0 \\ Vz & 0 & 0 & K33 & K34 & 0 & 0 \\ Mx & 0 & 0 & K43 & K44 & 0 & 0 \\ My & 0 & 0 & 0 & 0 & K55 & 0 \\ Mz & K61 & 0 & 0 & 0 & 0 & K66 \end{Bmatrix} \times \begin{Bmatrix} Disp. \\ \Delta x \\ \Delta y \\ \Delta z \\ \theta x \\ \theta y \\ \theta z \end{Bmatrix} = \begin{Bmatrix} Force \\ Vx \\ Py \\ Vz \\ Mx \\ My \\ Mz \end{Bmatrix}$$

The longitudinal reactions are:

$$V_x = K11 \cdot \Delta_x + K16 \cdot \theta_z \; and \; M_z = K61 \cdot \Delta_x + K66 \cdot \theta_z$$

The transverse reactions are:

$$V_z = K33 \cdot \Delta_z + K34 \cdot \theta_x \; and \; M_x = K43 \cdot \Delta_z + K44 \cdot \theta_x$$

For a true fixed head boundary condition (translation only) in the X and Z directions, there will be no rotation about the X and Z axis. θ_x and θ_z will be zero (or approach zero). This means the K34 and K16 cross-couple terms will not affect the shear reactions. Likewise, the K66 and K44 rotational terms zero out and do not affect the moment reaction. This leaves the K61 and K43 cross-couple terms to generate induced moments based on the deflections in the X and Z directions. Designers should note, the cross-couple moments are applied to a fixed footing element and are resisted axially by the piles. This affects the local stress in the footing and axial loading of the pile much more than the column moment and shear, which is usually the primary focus for design.

K11 and K66 (or K33 and K44) alone do not predict the shape or reaction of the foundation element. The cross-couple term K16 (or K34) will add a shear force to correct the applied moment deflection.

Modeling real life features may be somewhat different than the theoretically true fixed condition. The top of a column at the superstructure or some pile and shaft applications may have opposing shear and moment, however the moment may be much less than the theoretical induced free head moment value. In other words, there may be significant rotations that need to be accounted for in the spring modeling. Designers need to be aware of this situation and use engineering judgment. The FEM would have rotations about the X and Z axis. θ_x and θ_z will NOT be zero and both the cross-couples terms and rotational springs may significantly affect the analysis.

The spring value for the lateral cross-couple term is the induced shear divided by the associated rotation.

$$K16 = \frac{V_{x(ind)}}{\theta_z} \; (longitudinal) \qquad K34 = \frac{V_{z(ind)}}{\theta_x} \; (transverse)$$

The spring value for the moment cross-couple term is the induced shear divided by the associated rotation.

$$K61 = \frac{M_{x(ind)}}{-\Delta_z} \; (longitudinal) \qquad K43 = \frac{M_{z(ind)}}{-\Delta_x} \; (transverse)$$

Method II (Technique I) – Pile Footing Matrix Example

A matrix with cross-couple terms is a valid method to model pile supported footings. The analysis assumes the piles will behave similar to a column fixed at the bottom (in the soil) with lateral translation only at the top (no rotation). This requires fixed head boundary conditions to calculate spring values.

The LPILE program will solve for non-linear soil results for individual piles. See group effects in Section 7.2.5 to reduce the soil properties of a pile in a group in both the transverse and longitudinal directions. This sample matrix calculates a foundation spring for an individual pile.

The pile spring requires eight pile stiffness terms for a matrix as discussed in Appendix 7-B1. The following sample calculations discuss the lateral, longitudinal, and cross-couple spring coefficients for a GTStrudl local coordinate system. See Appendix 7-B1 for axial and torsion springs.

The maximum FEM transverse and longitudinal seismic loads (*Vy*, *Mz*, *Vz*, My and axial Px) provide two loads cases for analysis in LPILE. The LPILE results of these two load cases will be used to calculate lateral, longitudinal, and cross-couple spring coefficients.

This sample calculation assumes there are no group effects. Only the longitudinal direction will be calculated, the transverse direction will be similar. A standard global coordinate system is assumed for the bridge. This sample will assume a different local axis coordinate system to input matrix terms, as shown in Figure 7-B2-1. When the coordinate system changes, the sign convention of shear and moment also will change. This will be expressed in a 6×6 matrix by changing the location of the spring values and in sign of any cross-couple terms.

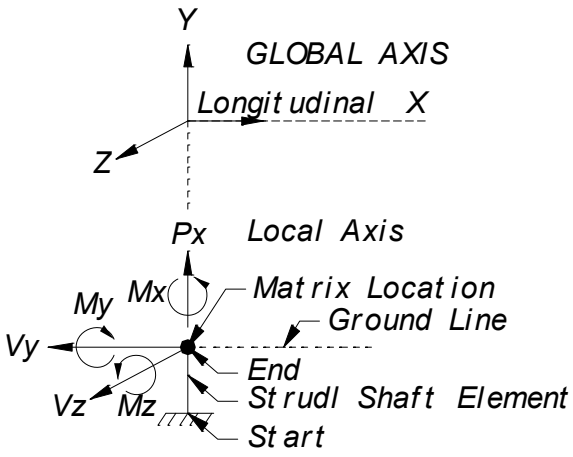

Local Axis Coordinate System
Figure 7-B2-1

The locations of matrix terms are shown in Figure 7-B1-2. The displacements are local and this requires the spring coefficients to be moved to produce the correct local reactions. The X axis is the new vertical direction. The Y axis is the new longitudinal direction. The spring coefficient definitions and notation remains the same as defined in Appendix 7-B1. Note the shift in diagonal terms and locations of the cross-couple terms.

$$\begin{Bmatrix} & Px & Vy & Vz & Mx & My & Mz \\ Px & K22 & 0 & 0 & 0 & 0 & 0 \\ Vy & 0 & K11 & 0 & 0 & 0 & K16 \\ Vz & 0 & 0 & K33 & 0 & K34 & 0 \\ Mx & 0 & 0 & 0 & K55 & 0 & 0 \\ My & 0 & 0 & K43 & 0 & K44 & 0 \\ Mz & 0 & K61 & 0 & 0 & 0 & K66 \end{Bmatrix} \times \begin{Bmatrix} Disp. \\ \Delta x \\ \Delta y \\ \Delta z \\ \theta x \\ \theta y \\ \theta z \end{Bmatrix} \equiv \begin{Bmatrix} Force \\ Px \\ Vy \\ Vz \\ Mx \\ My \\ Mz \end{Bmatrix}$$

Matrix in Local Coordinate System
Figure 7-B2-2

Where the linear spring constants or K values are defined as follows (see Figure 7-B2-3 for direction and sign convention):

K11= $-V_{y(app)}/-\Delta_y$ = Longitudinal Lateral Stiffness (kip/in)
K22= AE/L = Vertical or Axial Stiffness (k/in)
K33= $-V_{z(app)}/-\Delta_z$ = Transverse Lateral Stiffness (k/in)
K44= $-M_{y(app)}/-\theta_y$ = Transverse Bending or Moment Stiffness (kip-in/rad)
K55= JG/L = Torsional Stiffness (kip-in/rad)
K66= $M_{z(app)}/\theta_z$ = Longitudinal Bending or Moment Stiffness (kip-in/rad)
K34= $-V_{z(ind)}/-\theta_y$ = Transverse Lateral Cross-couple term (kip/rad)
K16= $-V_{y(ind)}/+\theta_z$ = Longitudinal Lateral Cross-couple term (kip/rad)
K43= $-M_{y(ind)}/-\Delta_z$ = Longitudinal Moment Cross-couple term (kip-in/in)
K61= $+M_{z(ind)}/-\Delta_y$ = Transverse Moment Cross-couple term (kip-in/in)

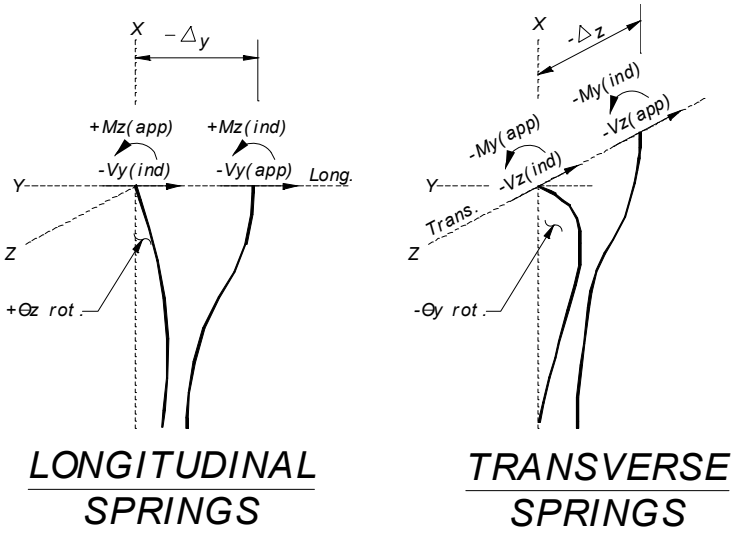

Local Coordinate System Sign Conventions
Figure 7-B2-3

Results from the local coordinate system

Px = 50,000 lbs (axial load)
Vy = -60,000 lbs (shear along longitudinal axis)
Vz = -40,000 lbs (shear along transverse axis)
My = -2,230,000 lb-in (moment about longitudinal axis)
Mz = 3,350,000 lb-in (moment about transverse axis)

Load Case 1 - Longitudinal Direction

Load Case 1 applies the lateral load (Vy) and axial load (Px), and restrains the top against rotation (slope = 0 rad).

Input to LPILE:

Boundary condition code	=	2
Lateral load at the pile head	=	-60000.000 lbs
Slope at the pile head	=	0.000 in/in
Axial load at the pile head	=	50000.000 lbs

Output from LPILE:

X (in)	Deflection Δ_y (in)	Moment $M_{z(ind)}$ (lbs-in)	Shear $V_{y(app)}$ (lbs)	Slope (Rad.)
0.000	-0.13576	3.761E+06	-60000.000	0.000000

Load Case 2 - Longitudinal Direction

Load case 2 applies the moment load (Mz) and axial load (Px), and restrains the top against deflection (deflection = 0 rad).

Input to LPILE:

Boundary condition code	=	4
Deflection at the pile head	=	0.000 in
Moment at the pile head	=	3.350E+06 in-lbs
Axial load at the pile head	=	50000.000 lbs

Output from LPILE:

X (in)	Deflection (in)	Moment $M_{z(ind)}$ (lbs-in)	Shear $V_{y(ind)}$ (lbs)	Slope θ_z (Rad.)
0.000	0.00000	3.350E+06	-33027.667	0.001192

Springs Constants – Longitudinal Direction

K11 = $-V_{y(app)}/-\Delta_y$ = -60 kip/-0.13576 in = 442 kip/in
K66 = $M_{z(app)}/\theta_z$ = 3,350 kip-in/0.001192 rad = 2,810,403 kip-in/rad
K16 = $-V_{y(ind)}/+\theta_z$ = -33 kip/0.001192 rad = -27,685 kip/rad
K61 = $+M_{z(ind)}/-\Delta_y$ = 3,761 kip-in/-0.13576 in = -27,703 kip-in/in

$$\begin{Bmatrix} & \text{Px} & \text{Vy} & \text{Vz} & \text{Mx} & \text{My} & \text{Mz} \\ \text{Px} & \text{K22} & 0 & 0 & 0 & 0 & 0 \\ \text{Vy} & 0 & 442\frac{\text{kip}}{\text{in}} & 0 & 0 & 0 & -27{,}685\frac{\text{kip}}{\text{rad}} \\ \text{Vz} & 0 & 0 & \text{K33} & 0 & \text{K34} & 0 \\ \text{Mx} & 0 & 0 & 0 & \text{K55} & 0 & 0 \\ \text{My} & 0 & 0 & \text{K43} & 0 & \text{K44} & 0 \\ \text{Mz} & 0 & -27{,}703\frac{\text{kip}-\text{in}}{\text{in}} & 0 & 0 & 0 & 2{,}810{,}403\frac{\text{kip}-\text{in}}{\text{rad}} \end{Bmatrix} \times \begin{Bmatrix} \text{Disp.} \\ \Delta x \\ \Delta y \\ \Delta z \\ \theta x \\ \theta y \\ \theta z \end{Bmatrix} \equiv \begin{Bmatrix} \text{Force} \\ \text{Px} \\ \text{Vy} \\ \text{Vz} \\ \text{Mx} \\ \text{My} \\ \text{Mz} \end{Bmatrix}$$

Method III – Non-Linear Springs

A finite element model may use non-linear springs based on PY curves to represent foundation response as shown in PY curves graph the relationship between the lateral soil resistance and the associated deflection of the soil. Generally, P stands for a force per unit length (of pile) such as kips per inch. Y is the corresponding horizontal deflection (of pile) in units such as inches.

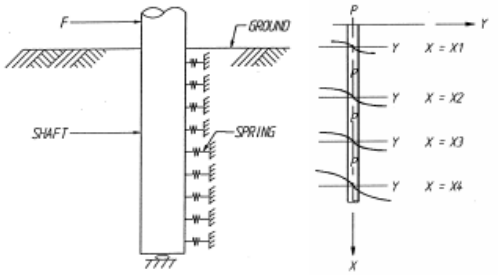

Pile Model Using a Set of Non-linear PY Curves
Figure 7-B3-1

Node placement for springs should attempt to imitate the soil layers. Generally, the upper ⅓ of the pile in stiff soils has the most significant contribution to the lateral soil reaction. Springs in this region should be spaced at most 3 feet apart. Spacing of 2.5 feet has demonstrated results within 10% of LPILE output moment and shear.

Springs for the lower ⅔ of the pile can transition to a much larger spacing. Stiff foundations in weak soils will transfer loads much deeper in the soil and more springs would be sensible.

Transverse and longitudinal springs must include group reduction factors to analyze the structure/soil response. Soil properties are modified in LPILE to account for lateral group effects. LPILE then generates PY curves based on the modified soil properties and desired depths. See Section 7.2.5 for group effects.

FEM programs will accept non-linear springs in a Force (F) vs. Deflection (L) format. P values in a PY curve must be multiplied by the pile length associated with the spring in the FEM. This converts a P value in Force/Length units to Force. This cannot be done during a response spectrum analysis with some FEM programs.

Soil Modulus - ES

Soil Modulus is defined as the force per length (of a pile) associated with a soil deflection. As shown in Figure 7-B3-2, ES is a slope on the PY curve or P/Y. ES is a secant modulus since the PY relationship is nonlinear and the modulus is a constant. The units are F/L per L or F/L2, such as kips per square inch.

Subgrade Modulus - kS

A closely related term is the Subgrade Modulus (or Modulus of Subgrade Reaction) provided in a geotechnical report. This is defined as the soil pressure associated with a soil deflection. The units are F/L2 per L or F/L3, such as kips per cubic inch.

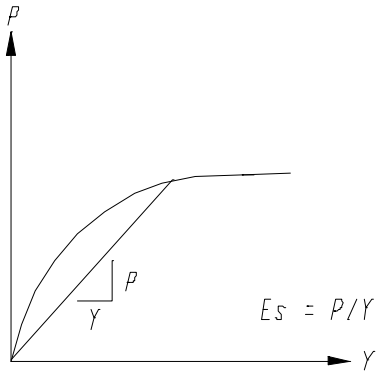

Secant Modulus Illustration
Figure 7-B3-2

7.99 References

1. AASHTO (2011) "AASHTO *Guide Specification for LRFD Seismic Bridge Design*," American Association of State Highway and Transportation Officials, Washington, D.C.
2. ACI (2011) "*Building Code Requirements for Structural Concrete and Commentary*," American Concrete Institute, Farmington Hills, MI.
3. AISC (2010) "*Specifications for Structural Steel Buildings*" ANSI/AISC Standard 360-10, American Institute of Steel Construction, Chicago, IL.
4. AISI. American Iron and Steel Institute.
5. Caltrans. (2008). Memo to Designers 3-1 Deep Foundations, California Department of Transportation, Sacrameto, CA.
6. Hannigan, P. J., Goble, G.G., Likins, G.E., and Rausche, F. (2006). "Design and Construction of Driven Pile Foundation," FHWA NHI-05-042, Federal Highway Administration, U.S. Department of Transportation, Washington, D.C., Vol. I.
7. Roeder, C.W, Lehman, D.E.(2012) Initial Investigation of Reinforced Concrete-filled Tubes for use in Bridge Foundations, Report No. WA-RD 776.1, Washington State Transportation Center (TRAC), University of Washington, Seattle, WA.
8. Roeder, C.W., Lehman, D.E., and Bishop, E. (2010) "*Strength and Stiffness of Circular Concrete-filled Tubes*," ASCE, Journal of Structural Engineering, Vol 136, No 12, pgs, 1545-53, Reston, VA.
9. Roeder, C.W, Lehman, D.E., and Thody, R. (2009) "*Composite Action in CFT Components and Connections*," AISC, Engineering Journal, Chicago, IL.
10. Stephens, M.T, Lehman, D.E, and Roeder, C.W. (2016) "*Concrete-Filled Tube Bridge Pier Connections for Accelerated Bridge Construction*." California Department of Transportation, Report Number CA15-2417.

This page intentionally left blank.

Chapter 8 Walls and Buried Structures Contents

8.1 Retaining Walls 8-1
8.1.1 General 8-1
8.1.2 Common Types of Retaining Walls 8-2
8.1.3 General Design Considerations 8-4
8.1.4 Design of Reinforced Concrete Cantilever Retaining Walls 8-4
8.1.5 Design of Cantilever Soldier Pile and Soldier Pile Tieback Walls 8-9
8.1.6 Design of Structural Earth Walls 8-13
8.1.7 Design of Standard Plan Geosynthetic Walls 8-13
8.1.8 Design of Soil Nail Walls 8-13
8.1.9 Miscellaneous Items 8-13

8.2 Noise Barrier Walls 8-17
8.2.1 General 8-17
8.2.2 Loads 8-17
8.2.3 Design 8-18

8.3 Buried Structures 8-21
8.3.1 General 8-21
8.3.2 WSDOT Designed Standard Culverts 8-21
8.3.3 General Design Requirements 8-21
8.3.4 Design of Box Culverts 8-24
8.3.5 Design of Precast Reinforced Concrete Three-Sided Structures 8-25
8.3.6 Design of Detention Vaults 8-26
8.3.7 Design of Tunnels 8-28

8.4 Bridge Standard Drawings 8-30

8.5 Appendices 8-31
Appendix 8.1-A1 Summary of Design Specification Requirements for Walls 8-32

8.99 References 8-35

Chapter 8 Walls and Buried Structures

8.1 Retaining Walls

8.1.1 General

A retaining wall is a structure built to provide lateral support for a mass of earth or other material where a grade separation is required. Retaining walls depend either on their own weight, their own weight plus the additional weight of laterally supported material, or on a tieback system for their stability. Additional information is provided in the *Geotechnical Design Manual* Chapter 15.

Standard designs for noise barrier walls (precast concrete, cast-in-place concrete, or masonry), and geosynthetic walls are shown in the Standard Plans. The Region Design PE Offices are responsible for preparing the PS&E for retaining walls for which standard designs are available, in accordance with the *Design Manual* M 22-01. However, the Bridge and Structures Office may prepare PS&E for such standard type retaining walls if such retaining walls are directly related to other bridge structures being designed by the Bridge and Structures Office.

Structural earth wall (SE) systems meeting established WSDOT design and performance criteria have been listed as "preapproved" by the Bridge and Structures Office and the Materials Laboratory Geotechnical Branch. The PS&E for "preapproved" structural earth wall systems shall be coordinated by the Region Design PE Office with the Bridge and Structures Office, and the Materials Laboratory Geotechnical Branch, in accordance with *Design Manual* M 22-01.

The PS&E for minor non-structural retaining walls, such as rock walls, gravity block walls, and gabion walls, are prepared by the Region Design PE Offices in accordance with the *Design Manual* M 22-01, and any other design input from the Region Materials Office, Materials Laboratory Geotechnical Branch or Geotechnical Engineer.

All other retaining walls not covered by the Standard Plans such as reinforced concrete cantilever walls with attached traffic barriers, soil nail walls, soldier pile walls, soldier pile tieback walls and all walls beyond the scope of the designs tabulated in the Standard Plans, are designed by the Bridge and Structures Office according to the design parameters provided by the Geotechnical Engineer.

The Hydraulics Branch of the Design Office should be consulted for walls that are subject to floodwater or are located in a flood plain. The State Bridge and Structures Architect should review the architectural features and visual impact of the walls during the Preliminary Design stage. The designer is also directed to the retaining walls chapter in the *Design Manual* M 22-01 and *Geotechnical Design Manual* Chapter 15, which provide valuable information on the design of retaining walls.

8.1.2 Common Types of Retaining Walls

The majority of retaining walls used by WSDOT are one of the following five types:

1. Proprietary Structural Earth (SE) Walls – *Standard Specifications* Section 6-13.
2. Geosynthetic Walls (Temporary and Permanent) – *Standard Plan* D-3 and *Standard Specifications* Section 6-14.
3. Standard Reinforced Concrete Cantilever Retaining Walls - *Standard Plans* D-10.10 through D-10.45 and *Standard Specifications* Section 6-11.
4. Soldier Pile Walls and Soldier Pile Tieback Walls – *Standard Specifications* Sections 6-16 and 6-17.
5. Soil Nail Walls–*Standard Specifications* Section 6-15.

Other wall systems, such as secant pile or cylinder pile walls, may be used based on the recommendation of the Geotechnical Engineer. These walls shall be designed in accordance with the current AASHTO LRFD.

A. Preapproved Proprietary Walls

A wall specified to be supplied from a single source (patented, trademark, or copyright) is a proprietary wall. Walls are generally preapproved for heights up to 33 feet. The Materials Laboratory Geotechnical Division will make the determination as to which preapproved proprietary wall system is appropriate on a case-by-case basis. The following is a description of the most common types of proprietary walls:

1. Structural Earth Walls (SE)

A structural earth wall is a flexible system consisting of concrete face panels or modular blocks that are held rigidly into place with reinforcing steel strips, steel mesh, welded wire, or geogrid extending into a select backfill mass. These walls will allow for some settlement and are best used for fill sections. The walls have two principle elements:

- Backfill or wall mass: a granular soil with good internal friction (i.e. gravel borrow).
- Facing: precast concrete panels, precast concrete blocks, or welded wire (with or without vegetation).

Design heights in excess of 33 feet shall be approved by the Materials Laboratory Geotechnical Division. If approval is granted, the designer shall contact the individual structural earth wall manufacturers for design of these walls before the project is bid so details can be included in the Plans. See Bridge Standard Drawing 8.1-A2 for details that need to be provided in the Plans for manufacturer designed walls.

A list of current preapproved proprietary wall systems is provided in the *Geotechnical Design Manual* Appendix 15-D. For additional information see the retaining walls chapter in the *Design Manual* M 22-01 and *Geotechnical Design Manual* Chapter 15. For the SEW shop drawing review procedure see *Geotechnical Design Manual* Chapter 15.

2. Other Proprietary Walls

Other proprietary wall systems such as crib walls, bin walls, or precast cantilever walls, can offer cost reductions, reduce construction time, and provide special aesthetic features under certain project specific conditions.

A list of current preapproved proprietary wall systems and their height limitations is provided in the *Geotechnical Design Manual* Appendix 15-D. The Region shall refer to the retaining walls chapter in the *Design Manual* M 22-01 for guidelines on the selection of wall types. The Materials Laboratory Geotechnical Division and the Bridge and Structures Office Preliminary Plans Unit must approve the concept prior to development of the PS&E.

B. Geosynthetic Wrapped Face Walls

Geosynthetic walls use geosynthetics for the soil reinforcement and part of the wall facing. Use of geosynthetic walls as permanent structures requires the placement of a cast-in-place, precast or shotcrete facing. Details for construction are shown in Standard Plans D-3.09, D-3.10 and D-3.11.

C. Reinforced Concrete Cantilever Walls

Reinforced concrete cantilever walls consist of a base slab footing from which a vertical stem wall extends. These walls are suitable for heights up to 35 feet. Details for construction and the maximum bearing pressure in the soil are given in the Standard Plans D-10.10 to D-10.45.

A major disadvantage of these walls is the low tolerance to post-construction settlement, which may require use of deep foundations (shafts or piling) to provide adequate support.

D. Soldier Pile Walls and Soldier Pile Tieback Walls

Soldier Pile Walls utilize wide flange steel members, such as W or HP shapes. The piles are usually spaced 6 to 10 feet apart. The main horizontal members are timber lagging, precast concrete lagging or cast in place concrete fascia panels which are designed to transfer the soil loads to the piles. For additional information see WSDOT *Geotechnical Design Manual* Chapter 15. See Bridge Standard Drawing 8.1-A3 for typical soldier pile wall details.

E. Soil Nail Walls

The basic concept of soil nailing is to reinforce and strengthen the existing ground by installing steel bars called “nails” into a slope or excavation as construction proceeds from the “top down”. Soil nailing is a technique used to stabilize moving earth, such as a landslide, or as temporary shoring. Soil anchors are used along with the strength of the soil to provide stability. The Geotechnical Engineer designs the soil nail system whereas the Bridge and Structures Office designs the wall fascia. Presently, the FHWA Publication FHWA-NHI-14-007 “*Geotechnical Engineering Circular No. 7 Soil Nail Walls*” is being used for structural design of the fascia. See Bridge Standard Drawing 8.1-A4 for typical soil nail wall details.

8.1.3 General Design Considerations

All designs shall follow procedures as outlined in AASHTO LRFD Chapter 11, the *Geotechnical Design Manual* M 46-03. See Appendix 8.1-A1 for a summary of design specification requirements for walls.

All construction shall follow procedures as outlined in the WSDOT *Standard Specifications*, latest edition.

The Geotechnical Engineer will provide the earth pressure diagrams and other geotechnical design requirements for special walls to be designed by the Bridge and Structures Office. Pertinent soil data will also be provided for preapproved proprietary structural earth walls (SEW), non-standard reinforced concrete retaining walls, and geosynthetic walls.

8.1.4 Design of Reinforced Concrete Cantilever Retaining Walls

A. Standard Reinforced Concrete Cantilever Retaining Walls

The Standard Plan reinforced concrete retaining walls have been designed in accordance with the requirements of the AASHTO LRFD 4th Edition 2007 and interims through 2008.

1. Western Washington Walls (Types 1 through 4)

a. The seismic design of these walls has been completed using and effective Peak Ground Acceleration of 0.51g. Extreme Event stability of the wall was based on 100 percent of the wall inertia force combined with 50 percent of the seismic earth pressure.

b. Active Earth pressure distribution was linearly distributed per Section 7.7.4. The corresponding Ka values used for design were 0.24 for wall Types 1 and 2, and 0.36 for Types 3 and 4.

c. Seismic Earth pressure distribution was uniformly distributed in accordance with *Geotechnical Design Manual* M 46-03, Nov. 2008 Section 15.4.2.9, and was supplemented by AASHTO LRFD (Figure 11.10.7.1-1). The corresponding Kae values used for design were 0.43 for Types 1 and 2, and 0.94 for Types 3 and 4.

d. Passive Earth pressure distribution was linearly distributed. The corresponding Kp value used for design was 1.5 for all walls. For Types 1 and 2, passive earth pressure was taken over the depth of the footing. For Types 3 and 4, passive earth pressure was taken over the depth of the footing and the height of the shear key.

e. The retained fill was assumed to have an angle of internal friction of 36 degrees and a unit weight of 130 pounds per cubic foot. The friction angle for sliding stability was assumed to be 32 degrees.

f. Load factors and load combinations used in accordance with AASHTO LRFD Sections 3.4.1-1 and 2. Stability analysis performed in accordance with AASHTO LRFD Section 11.6.3 and C11.5.5-1& 2.

g. Wall Types 1 and 2 were designed for traffic barrier collision forces, as specified in AASHTO LRFD Section A13.2 for TL-4. These walls have been designed with this force distributed over the distance between wall section expansion joints (48 feet).

2. Eastern Washington Walls (Types 5 through 8)

a. The seismic design of these walls has been completed using and effective Peak Ground Acceleration of 0.2g. Extreme Event stability of the wall was based on 100 percent of the wall inertia force combined with 50 percent of the seismic earth pressure.

b. Active Earth pressure distribution was linearly distributed in accordance with Section 7.7.4. The corresponding Ka values used for design were 0.36 for wall Types 5 and 6, and 0.24 for Types 7 and 8.

c. Seismic Earth pressure distribution was uniformly distributed in accordance with *Geotechnical Design Manual* Section 15.4.2.9, and was supplemented by AASHTO LRFD Figure 11.10.7.1-1. The corresponding Kae values used for design were 0.55 for Types 5 and 6, and 0.30 for Types 7 and 8.

d. Passive Earth pressure distribution was linearly distributed, and was taken over the depth of the footing and the height of the shear key. The corresponding Kp value used for design was 1.5 for all walls.

e. The retained fill was assumed to have an angle of internal friction of 36 degrees and a unit weight of 130 pounds per cubic foot. The friction angle for sliding stability was assumed to be 32 degrees.

f. Load factors and load combinations used in accordance with AASHTO LRFD 3.4.1-1& 2. Stability analysis performed in accordance with AASHTO LRFD Section 11.6.3 and C11.5.5-1 & 2.

g. Wall Types 7 and 8 were designed for traffic barrier collision forces, as specified in AASHTO LRFD Section A13.2 for TL-4. These walls have been designed with this force distributed over the distance between wall section expansion joints (48 feet).

B. Non-Standard Reinforced Concrete Retaining Walls

1. Bearing Resistance, Eccentricity, and Sliding Stability

For sliding, the passive resistance in the front of the footing may be considered if the earth is more than 2 feet deep on the top of the footing and does not slope downward away from the wall. Otherwise, the passive resistance shall be ignored above the bottom of the footing for the Strength Limit States and ignored above the top of the footing for the Extreme Event Limit States

The design soil bearing pressure at the toe of the footing shall not exceed the factored soil bearing capacity supplied by the Geotechnical Engineer.

2. Application of Lateral Loads

The lateral loads for reinforced concrete retaining walls with a horizontal backfill shall be applied as shown in Figure 8.1.4-1.

The lateral loads for reinforced concrete retaining walls with a sloping backfill shall be applied as shown in Figure 8.1.4-2.

a. The sloped backfill can be a 2H:1V maximum slope with a limited surcharge height (broken back backfill) or a 3H:1V maximum slope with no surcharge height (infinite backfill).

b. For the broken back backfill condition, the slope angle β* is based on the AASHTO LRFD Figure 3.11.5.8.1-3.

c. The wall backfill interface friction angle is $\delta = 2/3\ \phi_f$ but not greater than β or β* which is consistent with the Coulomb wedge theory.

3. Application of Collision Loads

For walls with traffic barriers constructed integral with the wall stem, the vehicular collision load shall be included in the design. To ensure that any failure due to the collision remains in the barrier section, the top of the wall stem shall have sufficient resistance to force the yield line failure pattern to remain within the barrier. The top of the wall stem shall be designed in accordance with the requirement of the AASHTO LRFD Article A13.4.

As shown in Figures 8.1.4-3 and 8.1.4-4, the collision force (CT, F_t) is assumed to be distributed over the longitudinal length (L_t) at the top of the traffic barrier and is assumed to distribute downward to the top of the footing at a 45 degree angle. See AASHTO LRFD Table A13.2-1 for L_t and F_t values. The distribution of the collision force in the footing shall be the distance between expansion joints.

For the Extreme Event II Limit State, the load factor, γ_p, for EH is 1.0 to account for the dynamic nature of the collision load.

4. Wall Footing Structural Design

Refer to Section 7.7 for additional footing structural design criteria. The General Footing Criteria provided in Section 7.7.1 shall be applicable to both retaining wall footings and leveling pads. For footings with steps, the bottom of the footing step is to be sloped no steeper than 1H:2V (See Std. Plan D-2.04 for an example). Footings with 90 degree steps at the bottom of the footing shall not be permitted.

The plan detailing criteria specified in Section 7.7.3.A are not applicable to retaining wall plans.

For retaining walls supported by deep foundations (shafts or piles), refer to Sections 7.7.5, 7.8 and 7.9.

The structural design of the footing shall assume a triangular or trapezoidal bearing pressure distribution in accordance with the AASHTO LRFD Article 10.6.5.

When designing the transverse reinforcement located in the bottom of the footing, the contribution of the soil located over the toe of the footing shall be ignored.

When designing the transverse reinforcement located in the top of the footing, the contribution of the bearing pressure under the footing shall be ignored.

Control of cracking by distribution of reinforcement as specified in AASHTO LRFD Article 5.7.3.4 shall be checked for the top and bottom face of the footing.

When designing the transverse reinforcement located in the top of the footing, the contribution of the bearing pressure under the footing shall be ignored.

Control of cracking by distribution of reinforcement as specified in AASHTO LRFD Article 5.7.3.4 shall be checked for the top and bottom face of the footing.

5. Wall Stem Structural Design

Refer to Sections 7.5.3 and 7.5.9 for additional wall stem structural design criteria.

In accordance with *Standard Specifications* Section 6-11.3(3), the Contract Plans or Special Provisions are to state whether the cast-in-place semi-gravity concrete cantilever wall may be constructed with precast concrete wall stem panels. For cast-in-place semi-gravity concrete cantilever walls with traffic barriers cast integral with the wall stem, the Contract Plans or Special Provisions are to provide explicit direction regarding whether the traffic barrier is permitted to be precast with the precast wall stem or cast-in-place after the precast wall stems are installed. When permitting the traffic barrier to be precast integral with the wall stem, the wall stem design and detailing shall account for the collision load transfer path into the wall stem.

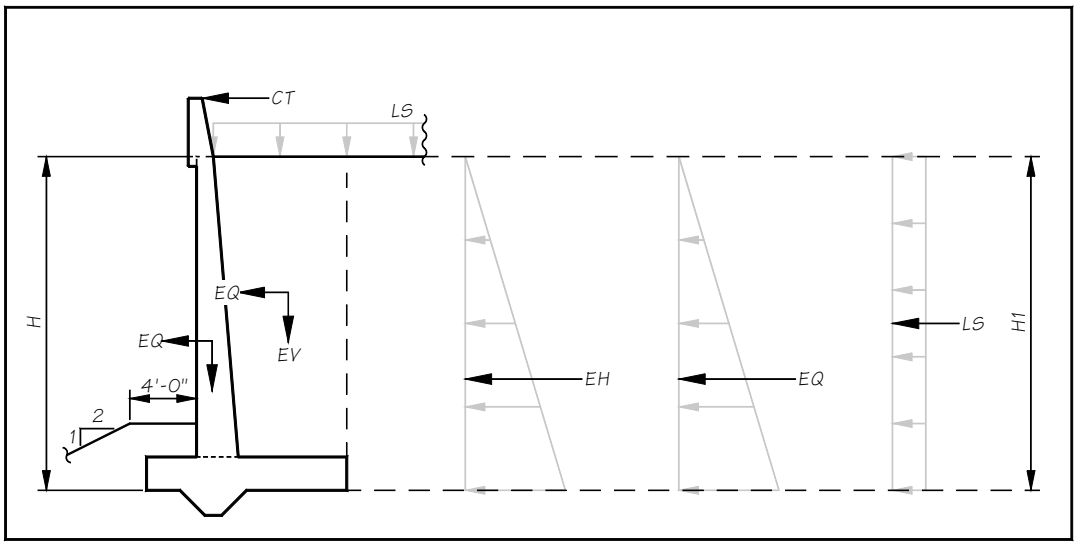

Application of Lateral Loads for walls with a horizontal backfill
Figure 8.1.4-1

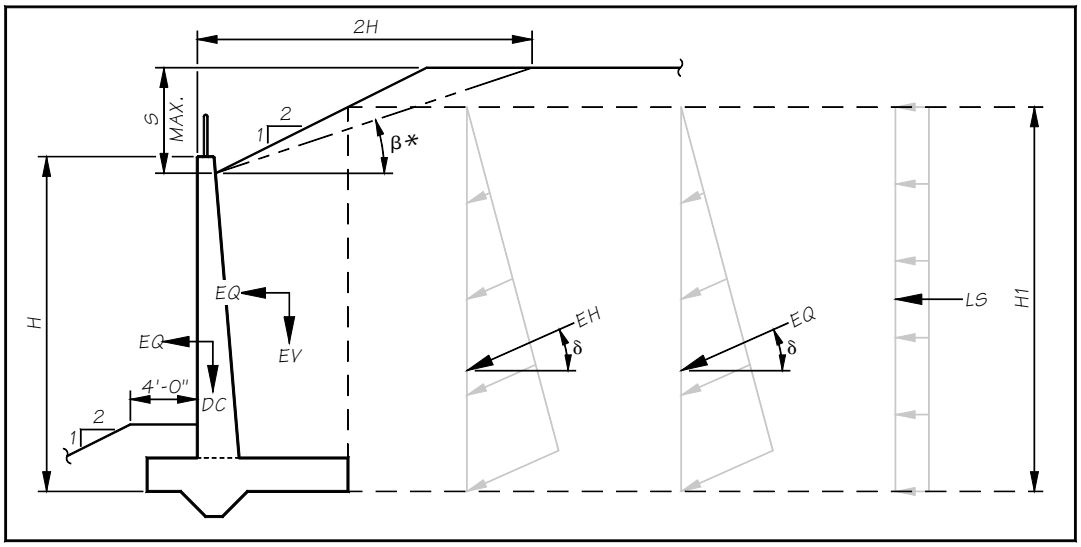

Application of Lateral Loads for walls with a sloping backfill
Figure 8.1.4-2

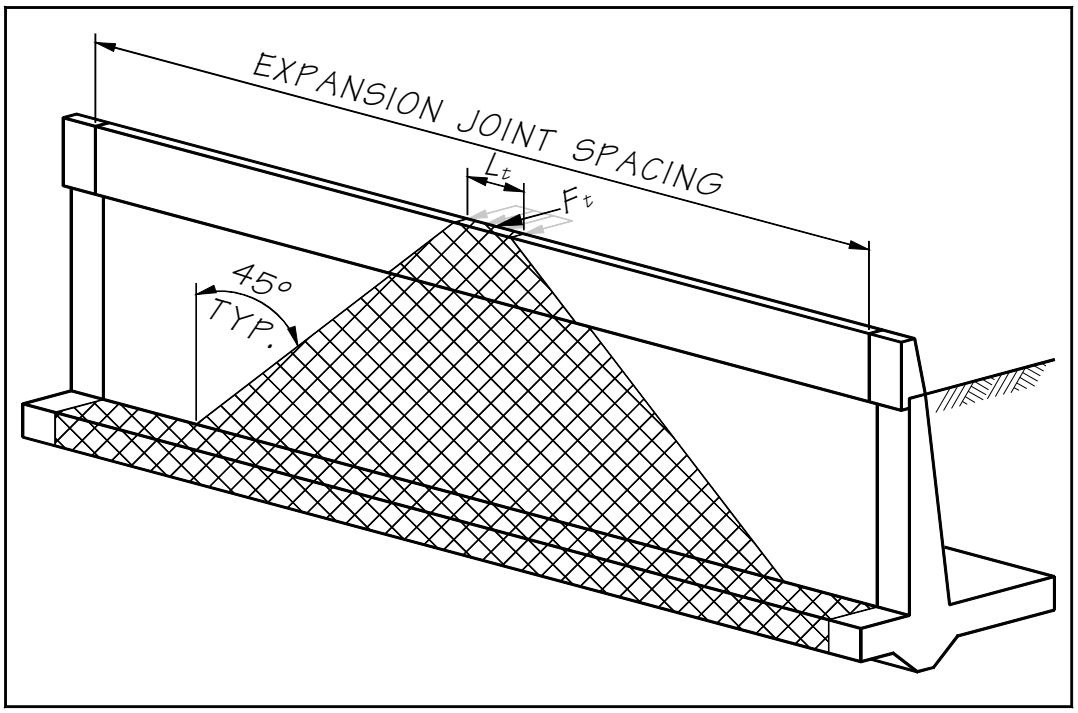

Application and Distribution of Vehicular Collision Load occurring near the midsection.
Figure 8.1.4-3

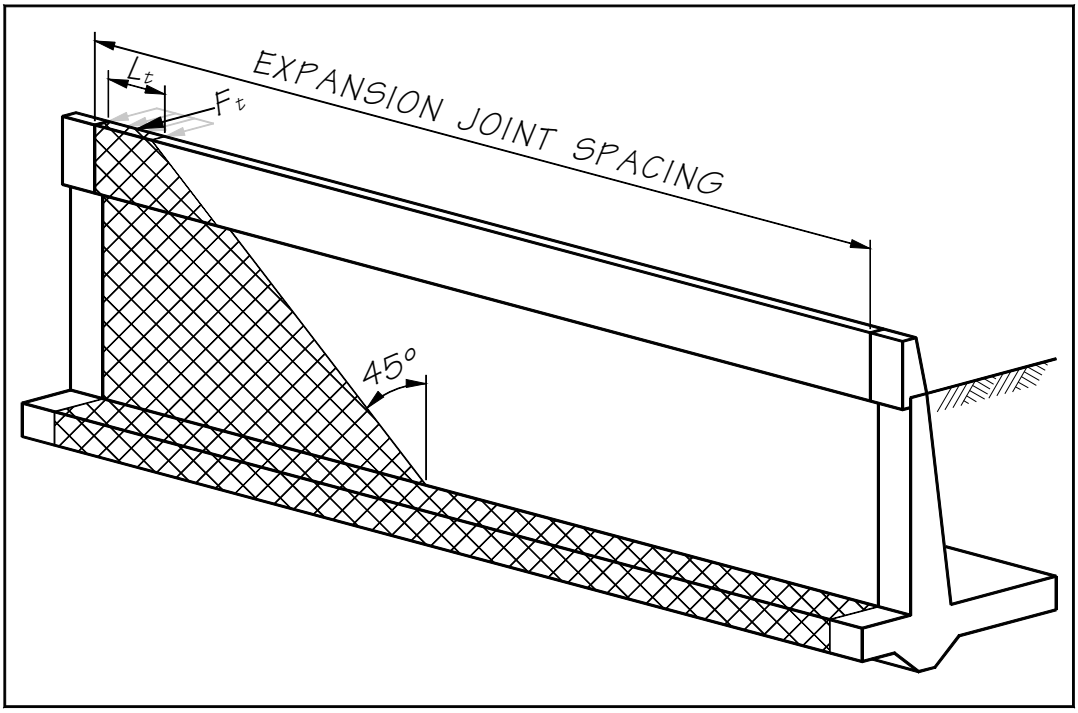

Application and Distribution of Vehicular Collision Load occurring near the end.
Figure 8.1.4-4

8.1.5 Design of Cantilever Soldier Pile and Soldier Pile Tieback Walls

A. Ground Anchors (Tiebacks)

See AASHTO LRFD Section 11.9 "*Anchored Walls*". The Geotechnical Engineer will determine whether anchors can feasibly be used at a particular site based on the ability to install the anchors and develop anchor capacity. The presence of utilities or other underground facilities, and the ability to attain underground easement rights may also determine whether anchors can be installed.

The anchor may consist of bars, wires, or strands. The choice of appropriate type is usually left to the Contractor but may be specified by the designer if special site conditions exist that preclude the use of certain anchor types. In general, strands and wires have advantages with respect to tensile strength, limited work areas, ease of transportation, and storage. However, bars are more easily protected against corrosion, and are easier to develop stress and transfer load.

The geotechnical report will provide a reliable estimate of the feasible factored design load of the anchor, recommended anchor installation angles (typically 10 degrees to 45 degrees), no-load zone dimensions, and any other special requirements for wall stability for each project.

Both the "tributary area method" and the "hinge method" as outlined in AASHTO LRFD Section C11.9.5.1 are considered acceptable design procedures to determine the horizontal anchor design force. The capacity of each anchor shall be verified by testing. Testing shall be done during the anchor installation (See *Standard Specifications* Section 6-17.3(8) and *Geotechnical Design Manual* M 46-03).

1. The horizontal anchor spacing typically follows the pile spacing of 6 to 10 feet. The vertical anchor spacing is typically 8 to 12 feet. A minimum spacing of 4 feet in both directions is not recommended because it can cause a loss of effectiveness due to disturbance of the anchors during installation.
2. For permanent ground anchors, the anchor design load, T, shall be according to AASHTO LRFD. For temporary ground anchors, the anchor design load, T, may ignore extreme event load cases.
3. The lock-off load is 60 percent of the controlling factored design load for temporary and permanent walls (see *Geotechnical Design Manual* Chapter 15).

Permanent ground anchors shall have double corrosion protection consisting of an encapsulation-protected tendon bond length as specified in the WSDOT *General Special Provisions*. Typical permanent ground anchor details are provided in the Appendix 8.1-A1.

Temporary ground anchors may have either double corrosion protection consisting of an encapsulation-protected tendon bond length or simple corrosion protection consisting of grout-protected tendon bond length.

B. Design of Soldier Pile

The soldier piles shall be designed for shear, bending, and axial stresses according to the latest AASHTO LRFD and *Geotechnical Design Manual* M 46-03 design criteria. The flexural design shall be based on the elastic section modulus "S" for the entire length of the pile for all Load combinations. The flexural design of soldier piles with tiebacks shall consider the requirements of AASHTO LRFD Article 6.10.8.2 and 6.10.3.2.

1. Application of Lateral Loads

a. Lateral loads are assumed to act over one pile spacing above the base of excavation in front of the wall. These lateral loads result from horizontal earth pressure, live load surcharge, seismic earth pressure, or any other applicable load.

b. Lateral loads are assumed to act over the shaft diameter below the base of excavation in front of the wall. These lateral loads result from horizontal earth pressure, seismic earth pressure or any other applicable load.

c. Passive earth pressure usually acts over three times the shaft diameter or one times the pile spacing, whichever is smaller.

2. Determining Depth of Pile Embedment

The depth of embedment of soldier piles shall be the maximum embedment as determined from the following;

a. 10 feet

b. As recommended by the Geotechnical Engineer of Record

c. As required for skin friction resistance and end bearing resistance.

d. As required to satisfy factored horizontal force equilibrium and factored moment equilibrium about the bottom of the soldier pile for cantilever soldier piles without permanent ground anchors.

e. As required to satisfy factored moment equilibrium of factored lateral force about the bottom of the soldier pile for soldier piles with permanent ground anchors.

3. Soldier Pile Shaft Backfill

Specify controlled density fill (CDF, 145 pcf) for the full height of the soldier pile shaft when shafts are anticipated to be excavated and concrete placed in the dry.

Specify pumpable lean concrete for the full height of the soldier pile shaft when shafts are anticipated to be excavated and concrete placed in the wet.

C. Design of Lagging

Lagging for soldier pile walls, with and without permanent ground anchors, may be comprised of timber, precast concrete, or steel. The expected service life of timber lagging is 20 years which is less than the 75 year service life of structures designed in accordance with AASHTO LRFD.

The Geotechnical Engineer will specify when lagging shall be designed for an additional 250 psf surcharge due to temporary construction load or traffic surcharge. The lateral pressure transferred from a moment slab shall be considered in the design of soldier pile walls and laggings.

1. Temporary Timber Lagging

Temporary lagging is based on a maximum 36 month service life before a permanent fascia is applied over the lagging. The wall Design Engineer shall review the Geotechnical Recommendations or consult with the Geotechnical Engineer regarding whether the lagging may be considered as temporary as defined in *Standard Specifications* Section 6-16.3(6). Temporary timber lagging shall be designed by the contractor in accordance with *Standard Specifications* Section 6-16.3(6)B.

2. Permanent Lagging

Permanent lagging shall be designed for 100 percent of the lateral load that could occur during the life of the wall in accordance with AASHTO LRFD Sections 11.8.5.2 and 11.8.6 for simple spans without soil arching. A reduction factor to account for soil arching effects may be used if permitted by the Geotechnical Engineer.

Timber lagging shall be designed in accordance with AASHTO LRFD Section 8.6. The size effect factor (CF_b) should be considered 1.0, unless a specific size is shown in the wall plans. The wet service factor (CM_b) should be considered 0.85 for a saturated condition at some point during the life of the lagging. The load applied to lagging should be applied at the critical depth. The design should include the option for the contractor to step the size of lagging over the height of tall walls, defined as walls over 15 feet in exposed face height.

Timber lagging designed as a permanent structural element shall consist of treated Douglas Fir-Larch, grade No. 2 or better. Hem-fir wood species, due to the inadequate durability in wet condition, shall not be used for permanent timber lagging. Permanent lagging is intended to last the design life cycle (75 years) of the wall. Timber lagging does not have this life cycle capacity but can be used when both of the following are applicable:

a. The wall will be replaced within a 20 year period or a permanent fascia will be added to contain the lateral loads within that time period.

   And,

b. The lagging is visible for inspections during this life cycle.

D. Design of Fascia Panels

Cast-in-place concrete fascia panels shall be designed as a permanent load carrying member in accordance with AASHTO LRFD Section 11.8.5.2. For walls without permanent ground anchors the minimum structural thickness of the fascia panels shall be 9 inches. For walls with permanent ground anchors the minimum structural thickness of the fascia panels shall be 14 inches. Architectural treatment of concrete fascia panels shall be indicated in the plans.

Concrete strength shall not be less than 4,000 psi at 28 days. The wall fascia is to extend 2 feet minimum below the finish ground line adjacent to the face of the wall.

When concrete fascia panels are placed on soldier piles, a generalized detail of lagging with strongback (see Bridge Standard Drawing 8.1-A3-5) shall be shown in the plans. This information will assist the contractor in designing formwork that does not overstress the piles while concrete is being placed.

Precast concrete fascia panels shall be designed to carry 100 percent of the load that could occur during the life of the wall. When timber lagging (including pressure treated lumber) is designed to be placed behind a precast element, conventional design practice is to assume that lagging will eventually fail and the load will be transferred to the precast panel. If another type of permanent lagging is used behind the precast fascia panel, then the design of the fascia panel will be controlled by internal and external forces other than lateral pressures from the soil (weight, temperature, Seismic, Wind, etc.). The connections for precast panels to soldier piles shall be designed for all applicable loads and the designer should consider rigidity, longevity (to resist cyclic loading, corrosion, etc.), and load transfer.

See Section 5.1.1 for use of shotcrete in lieu of cast-in-place conventional concrete for soldier pile fascia panels.

8.1.6 Design of Structural Earth Walls

A. Preapproved Proprietary Structural Earth Walls

Structural earth (SE) wall systems meeting established WSDOT design and performance criteria have been listed as "pre-approved" by the Bridge and Structures Office and the Materials Laboratory Geotechnical Branch. A list of current pre-approved proprietary wall systems and their limitations is provided in the *Geotechnical Design Manual* Appendix 15-D. For the SE wall shop drawing review procedure, see the *Geotechnical Design Manual* Chapter 15.

B. Non-Preapproved Proprietary Structural Earth Walls

Structural earth walls that exceed the limitations as provided in the *Geotechnical Design Manual* Appendix 15-D are considered to be non-preapproved. Use of non-preapproved structural earth walls shall require the approval of the State Geotechnical Engineer and the State Bridge and Structures Engineer.

8.1.7 Design of Standard Plan Geosynthetic Walls

Details for construction are given in the *Standard Plans Manual* Section D.

The width "w" of the precast panels as defined in Standard Plan D-3.11 is to be shown on the plan sheets and should be selected considering the architectural requirements for the wall.

8.1.8 Design of Soil Nail Walls

Soil nail walls shall be designed in accordance with the FHWA Publication FHWA-NHI-14-007 "*Geotechnical Engineering Circular No. 7 Soil Nail Walls*" February 2015. The seismic design parameters shall be determined in accordance with the most current edition of the AASHTO *Guide Specifications for LRFD Seismic Bridge Design* (SEISMIC). Typical soil nail wall details are provided in Appendix 8.1.

8.1.9 Miscellaneous Items

A. Architectural Treatment

Approval by the State Bridge and Structures Architect is required on all retaining wall aesthetics, including finishes, materials, and configuration.

B. Scour

The foundation for all walls constructed along rivers and streams shall be evaluated during design by the Hydraulics Engineer for scour in accordance with AASHTO LRFD Section 2.6.4.4.2. The wall foundation shall be located at least 2 feet below the scour depth in accordance with the *Geotechnical Design Manual* Section 15.4.5.

C. Fall Protection

For retaining walls with exposed wall heights of 4 feet or more, fall protection shall be provided in accordance with WAC 296-155-24615(2) and WAC 296-155-24609 and as described in the *Design Manual* Chapter 730.

D. Drainage

Drainage features shall be detailed in the Plans.

Permanent drainage systems shall be provided to prevent hydrostatic pressures developing behind the wall. A cut that slopes toward the proposed wall will invariably encounter natural subsurface drainage. Vertical chimney drains or prefabricated drainage mats can be used for normal situations to collect and transport drainage to a weep hole or pipe located at the base of the wall. Installing horizontal drains to intercept the flow at a distance well behind the wall may control concentrated areas of subsurface drainage (see *Geotechnical Design Manual* Chapter 15).

All reinforced concrete retaining walls shall have 3-inch diameter weepholes located 6 inches above final ground line and spaced about 12 feet apart. In case the vertical distance between the top of the footing and final ground line is greater than 10 feet, additional weepholes shall be provided 6 inches above the top of the footing. No weepholes are necessary in cantilever wingwalls. See Figure 7.5.10-1.

Weepholes can get clogged up or freeze up, and the water pressure behind the wall may start to increase. In order to keep the water pressure from building, it is important to have well draining gravel backfill and underdrains. Appropriate details must be shown in the Plans.

No underdrain pipe or gravel backfill for drains is necessary behind cantilever wingwalls. A 3 foot minimum vertical layer of gravel backfill shall be placed behind the cantilever wingwalls and shown in the Plans.

Backfill for wall, underdrain pipe and gravel backfill for drain are not included in the bridge quantities. The size of the underdrain pipe should not be shown on the bridge plans as this is a Design PE Office item and is subject to change during the design phase. If it is necessary to excavate existing material for the backfill, then this excavation shall be a part of the bridge quantities for "Structure Excavation Class A Incl. Haul".

E. Expansion, Contraction and Construction Joints

Odd panels for all types of walls shall normally be made up at the ends of the walls. All expansion, contraction and construction joints shall be shown in the plan sheets and are typically shown on the elevation.

1. Expansion Joints

For cast-in-place construction, a minimum of ½ inch premolded filler should be specified in the expansion joints.

Precast concrete cantilever wall expansion joints shall be in accordance with the *Standard Specifications* Section 6-11.3(3).

For cantilevered and gravity walls, expansion joint spacing should be a maximum of 60 feet on centers. For cantilevered and gravity walls constructed with a traffic barrier attached to the top, expansion joint spacing should be consistent with the length determined to be adequate distribution of the traffic collision loading.

For counterfort walls, expansion joint spacing should be a maximum of 32 feet on centers.

For soldier pile and soldier pile tieback walls with concrete fascia panels, expansion joint spacing should be 24 to 32 feet on centers.

Expansion joints are not permitted in footings except at bridge abutments and where the substructure type changes such as locations where spread footing to pile footing occurs. In these cases, the footing shall be interrupted by a ½ inch premolded expansion joint through both the footing and the wall.

2. Contraction Joints

Contraction joints shall be spaced at a maximum of 30 feet for walls with expansion joints spaced at intervals exceeding 32 feet.

3. Construction Joints

Construction joints are only permitted in the footing. The maximum spacing of construction joints in the footing shall be 120 feet. The footing construction joints should have a 6 inch minimum offset from the expansion or contraction joints in the wall stem.

F. Detailing of Standard Reinforced Concrete Retaining Walls

1. In general, the "H" dimension shown in the retaining wall Plans should be in foot increments. Use the actual design "H" reduced to the next lower even foot for dimensions up to 3 inches higher than the even foot.

   Examples: Actual height = 15′-3″, show "H" = 15′ on design plans
   Actual height > 15′-3″, show "H" = 16′ on design plans

   For walls that are not of a uniform height, "H" should be shown for each segment of the wall between expansion joints or at some other convenient location. On walls with a steep slope or vertical curve, it may be desirable to show 2 or 3 different "H" dimensions within a particular segment. The horizontal distance should be shown between changes in the "H" dimensions.

   The value for "H" shall be shown in a block in the center of the panel or segment. See Example, Figure 8.1.9-1.

2. Follow the example format shown in Figure 8.1.9-1.
3. Calculate approximate quantities using the Standard Plans.
4. Wall dimensions shall be determined by the designer using the Standard Plans.
5. Do not show any details given in the Standard Plans.
6. Specify in the Plans all deviations from the Standard Plans.
7. Do not detail reinforcing steel, unless it deviates from the Standard Plans.
8. For pile footings, use the example format with revised footing sizes, detail any additional steel, and show pile locations. Similar plan details are required for footings supported by shafts.

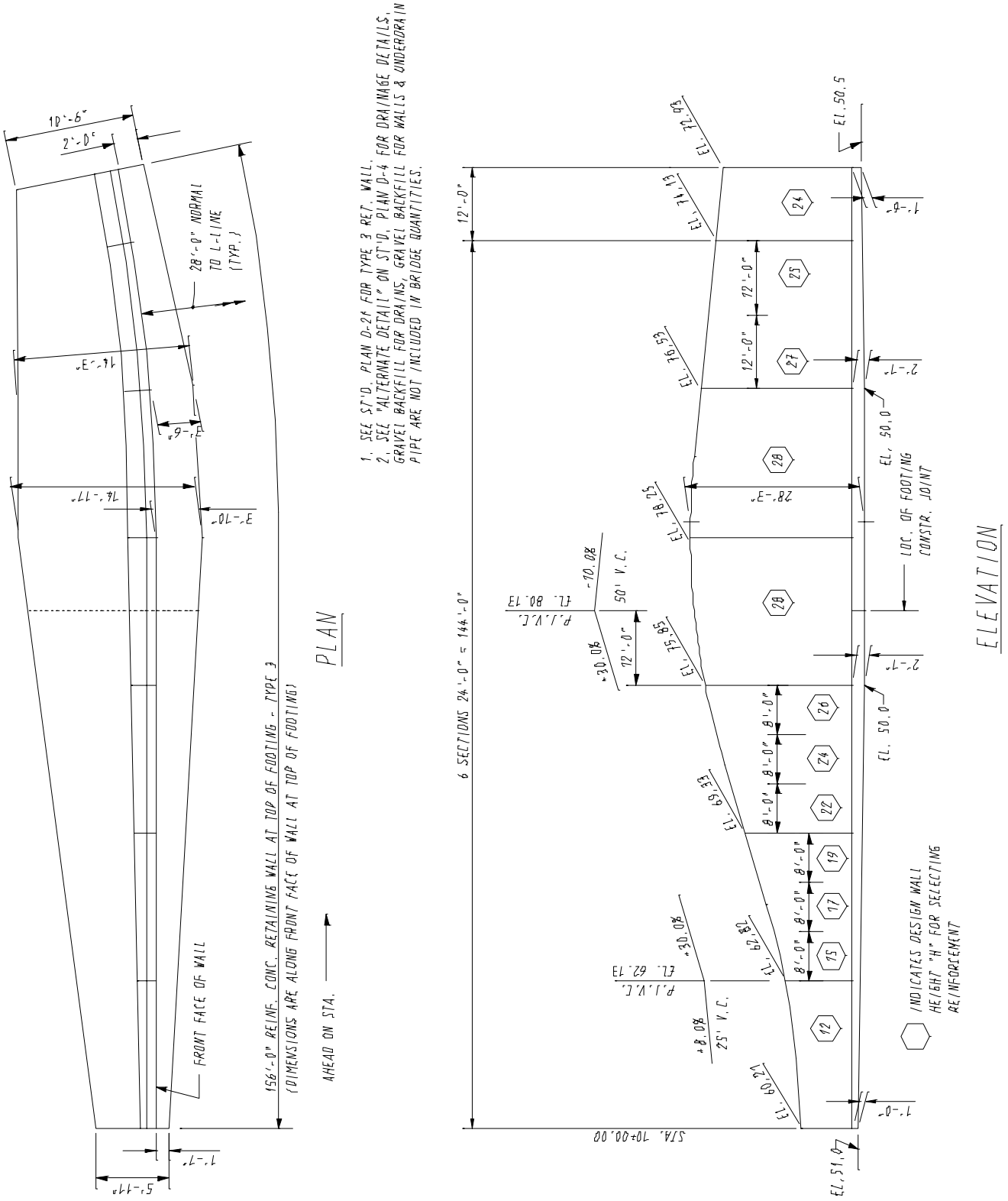
PLAN
ELEVATION
1. SEE ST'D. PLAN D-2f FOR TYPE 3 RET. WALL.
2. SEE "ALTERNATE DETAIL" ON ST'D. PLAN D-4 FOR DRAINAGE DETAILS. GRAVEL BACKFILL FOR DRAINS, GRAVEL BACKFILL FOR WALLS & UNDERDRAIN PIPE ARE NOT INCLUDED IN BRIDGE QUANTITIES.
156'-0" REINF. CONC. RETAINING WALL AT TOP OF FOOTING - TYPE 3 (DIMENSIONS ARE ALONG FRONT FACE OF WALL AT TOP OF FOOTING)
AHEAD ON STA.
FRONT FACE OF WALL
28'-0" NORMAL TO L-LINE (TYP.)
6 SECTIONS 24'-0" = 144'-0"
LOC. OF FOOTING CONSTR. JOINT
INDICATES DESIGN WALL HEIGHT "H" FOR SELECTING REINFORCEMENT
STA. 10+00.00
EL. 50.5
EL. 50.0
EL. 51.0

Figure 8.1.9-1

8.2 Noise Barrier Walls

8.2.1 General

Design of noise barrier walls shall be based on the requirements and guidance cited herein and in the current AASHTO LRFD, AASHTO SEISMIC, AASHTO *LRFD Bridge Construction Specifications*, WSDOT *General & Bridge Special Provisions* and the WSDOT *Standard Specifications* unless otherwise cited herein.

Details for construction of the Standard Plan Noise Barrier Walls may be found in Standard Plan D-2.04 through D-2.68 and *Standard Specifications* Section 6-12.

Noise barrier walls are primarily used in urban or residential areas to mitigate noise or to hide views of the roadway. Common types, as shown in the Standard Plans, include cast-in-place concrete panels (with or without traffic barrier), precast concrete panels (with or without traffic barrier), and masonry blocks. The State Bridge and Structures Architect should be consulted for wall type selection.

8.2.2 Loads

Noise barrier walls and their components shall be designed for all applicable loads defined in the current AASHTO LRFD Chapter 3.

Wind loads and on noise barriers shall be as specified in Chapter 3.

Seismic load shall be as follows:

$$\text{Seismic Dead Load} = A_s \times f \times D \tag{8.2-1}$$

In which:

$$A \times f \geq 0.10 \tag{8.2-2}$$

Where:

A_s = Peak seismic ground acceleration coefficient modified by short-period site factor

D = Dead load of the noise barrier and it's components

f = Dead load coefficient as specified in Table 8.2-1.

Location	f
Monolithic connection	1.0
Monolithic connection on bridges	2.5
Connection of precast wall to bridge barrier	8.0
Connection of precast wall to retaining wall or moment slab barrier	5.0

Dead Load Coefficient, f
Table 8.2-1

8.2.3 Design

A. Standard Plan Noise Barrier Walls

1. Noise Barrier Walls detailed in Standard Plans D-2.04 through D-2.34, D-2.42 through D-2.44, D-2.48 through D-2.68 have been designed in accordance with the following criteria.
   a. AASHTO *Guide Specifications for Structural Design of Sound Barriers,* 1989 and interims through 2002.
   b. The seismic design was based on a PGA of 0.35g which corresponds to a peak bedrock acceleration of 0.3g with an amplification factor of 1.18 for stiff soil.
   c. The *Design Manual* M 22 01, Chapter 740 tabulates the design wind speeds and various exposure conditions used to determine the appropriate wall type.
   d. The design parameters used in the standard plan noise wall foundation design are summarized in the *Geotechnical Design Manual* Chapter 17.
2. Noise Barrier Walls detailed in Standard Plans D-2.36 and D-2.46 have been designed in accordance with the requirements of the AASHTO LRFD, 6th Edition 2012 and interims through 2013, and the requirements and guidance cited herein:
   a. Load factors and load combinations for the design of all structural elements are in accordance with AASHTO LRFD Tables 3.4.1-1 and 3.4.1-2.
   b. Seismic design is in accordance with AASHTO LRFD Article 3.10.2.1, considering site classes B, C, D, and E and the following:
      i. Peak seismic ground acceleration coefficient on Rock (Site Class B).
         1. PGA = 0.45g for Western Washington
         2. PGA = 0.19g for Eastern Washington
      ii. Horizontal response spectral acceleration coefficient at 0.2-sec period on rock (Site Class B).
         1. S_s = 1.00 for Western Washington
         2. S_s = 0.43 for Eastern Washington
      iii. Horizontal response spectral acceleration coefficient at 1.0-sec period on rock (Site Class B).
         1. S_1 = 0.33 for Western Washington
         2. S_1 = 0.15 for Eastern Washington
      iv. Modal analysis was performed for the first four periods. The elastic seismic response coefficient C_{sm} was computed for each modal period in accordance with AASHTO LRFD Article 3.10.4.2 and all four C_{sm} coefficients were combined through the SRSS method.

v. The resultant seismic force is considered to act at a height of 0.71H above the top of the shaft, where H is the total height measured from the top of the panel to the top of the shaft.

c. Wind loads are computed in accordance with AASHTO LRFD Article 15.8.2 considering surface conditions characterized as "Sparse Suburban". The 50 year return period maximum wind velocity, as determined from AASHTO LRFD Figure 15.8.2-1, is 100 mph for Western Washington and 80 mph for Eastern Washington.

d. Drilled shaft foundations is designed for earth pressure distributions as shown in AASHTO LRFD Figure 3.11.5.10-1 considering the following:

i. Shaft depth, D1

1. 2H:1V fore-slope and a flat backslope
2. Angle of internal friction = 32 degrees
3. Soil unit weight = 125pcf
4. Corresponding $K_p = 1.5$
5. Corresponding $K_a = 0.28$

ii. Shaft depth, D2

1. 2H:1V fore-slope and a flat backslope
2. Angle of internal friction = 38 degrees
3. Soil unit weight = 125pcf
4. Corresponding $K_p = 2.3$
5. Corresponding $K_a = 0.22$

iii. The passive earth pressure distribution was assumed to start at the finished grade. However, the uppermost two feet of passive earth pressure was neglected, resulting in a trapezoidal passive earth pressure distribution.

iv. In accordance with AASHTO LRFD Table 11.5.7-1 and Article 11.5.8, the resistance factor applied to the passive earth pressure is as follows:

1. For the Strength Limit State, the resistance factor is taken as 0.75.
2. For the Extreme Event Limit State, the resistance factor is taken as 1.0.

e. Barrier is designed for minimum Test Level 4 (TL-4) vehicular collision loads in accordance to AASHTO LRFD Article 13, and shafts are designed for an equivalent static load of 10 kips.

f. Barrier shown in the Standard Plan could be either precast or cast-in-place, and the barrier shape could be Type F (shown), single slope or other TL-3 and TL-4 barrier systems.

B. Non-Standard Noise Barrier Walls

Noise barrier walls containing design parameters which exceed those used in the standard noise barrier wall design are considered to be non-standard.

All noise barrier walls which will be mounted on existing structures, supported by existing structures, or constructed as part of a new structure are considered to be non-standard and shall be evaluated by the Bridge and Structures Office and the Geotechnical Office.

1. Noise Barrier Walls on Bridges and Retaining Walls

   a. For noise barrier walls located on bridges, the total height, as measured from the top of bridge deck to the top of the noise barrier wall, shall be limited to 8′-0″.

   b. For noise barrier walls located on retaining walls, the total height, as measured from the top of roadway to the top of the noise barrier wall, shall be limited to 14′-0″.

   c. Cast-in-place noise barrier walls constructed with self-consolidating concrete and precast concrete noise barrier walls and shall conform to the following requirements.
      - Minimum thickness of the wall stem shall be 7 inches.
      - Minimum concrete clear cover on each face shall be 1½ inches.
      - Both vertical and horizontal reinforcement shall be placed in two parallel layers.

   d. Cast-in-place noise barrier walls constructed with conventional concrete shall conform to the following requirements.
      - Minimum thickness of the wall stem shall be 8 inches.
      - Minimum concrete clear cover on each face shall be 1½ inches.
      - Both vertical and horizontal reinforcement shall be placed in two parallel layers.
      - Minimum clear distance between parallel layers of reinforcement shall be 2½ inches.

8.3 Buried Structures

8.3.1 General

Buried structures consist of metal pipe, structural plate pipe, long-span structural plate, deep corrugated plate, reinforced concrete pipe, cast-in-place reinforced concrete and precast concrete arch, box and elliptical structures, thermoplastic pipe, and fiberglass pipe.

In accordance with current WSDOT policy, only cast-in-place reinforced concrete and precast concrete arch, box, and elliptical structures shall be used for buried highway and hydraulic structures with spans equal to or greater than 20 feet (measured parallel to roadway centerline).

The term culvert used in this chapter and in the *Standard Specifications* applies to all buried hydraulic structures only. The term tunnel applies to all buried highway structures conveying vehicles or pedestrians.

8.3.2 WSDOT Designed Standard Culverts

For WSDOT Designed Standard Culverts the WSDOT Bridge and Structures Office has developed culvert standards for the Precast Reinforced Concrete Split Box Culvert (PRCSBC) and Precast Reinforced Concrete Three-Sided Structures (PRCTSS) with span lengths from 20’ to 60’. See Section 8.4 for the list of Bridge Standard Drawings for Buried Structures containing the geometry table, typical sections and general details. See Appendices 8.3-B1 to 8.3-B3 for the Design Criteria used. The Design Criteria is a template only, should be modified for each project per site conditions, design requirements, and jurisdiction.

8.3.3 General Design Requirements

Design of buried structures shall be in accordance with the requirements and guidance cited herein and in the current AASHTO LRFD, AASHTO SEISMIC, Special Provisions and the *Standard Specifications* M 41-10.

All buried structures shall be designed for a minimum service life of 75 years.

The span length shall be the widest opening from interior face to interior face as measured along the centerline of the roadway.

A. Span Length Limitations

1. Span lengths less than 20 feet

Region Project Engineer Office may allow Contractor supplied designs of the buried hydraulic structure while under contract.

2. Span lengths equal to or greater than 20 feet and less than 26 feet

Region Project Engineer Office may utilize Contractor supplied designs of the buried hydraulic structure while under contract if the structure meets all of the following criteria:

a. Geotechnical Report foundation recommendation of spread footing support based on confirmed presence of competent soils at the site. No soft soil

support embankment requiring lightweight fills or ground improvement, as confirmed by the Geotechnical Report.

b. Peak Seismic Ground Accelerations at the project site of 0.3g or less, as shown in the *Geotechnical Design Manual* Figure 6-8 "Determination of Seismic Hazard Level, Peak Horizontal Acceleration (%G) for 7 percent Probability of Exceedance in 75 Years for Site Class B (Adapted From AASHTO 2012).

c. No liquefaction, lateral spread risks, or within the earthquake fault line as confirmed by the Geotechnical Report.

d. Skew angle of waterway alignment limited to within 25 degrees of a normal 90-degree crossing of the roadway alignment if the soil fill is retained by headwalls.

e. Not scour critical, as confirmed by the HQ Hydraulics Office.

3. Span lengths equal to or greater than 20 feet and less than 26 feet and with geometric and site restrictions

Buried hydraulic structures that do not meet the criteria listed in Section 8.3.3.A.2 above shall utilize the following procedure.

a. A preliminary plan shall be completed in accordance with the criteria listed in Chapter 2.

b. The design of the structure shall be completed prior to contract and the plans shall be included as a part of the Ad copy PS&E.

c. The design may be completed by one of the following;

- WSDOT engineering staff,
- Proprietary supplier identified as a sole source by WSDOT,
- Three proprietary suppliers with all three plan sets included as options in the Ad copy PS&E.

4. Span lengths greater than 26 feet

a. A preliminary plan shall be completed in accordance with the criteria listed in Chapter 2.

b. The design of the structure shall be completed prior to contract and the plans shall be included as a part of the Ad copy PS&E.

c. The design may be completed by one of the following;

- WSDOT engineering staff,
- Proprietary supplier identified as a sole source by WSDOT,
- Three proprietary suppliers with all three plan sets included as options in the Ad copy PS&E.

B. Application of Loads

The decrease in live load effect due to increase in fill depth shall be considered in both design and load rating of buried structures.

The requirement of Section 3.5 for inclusion of live load in the Extreme Event-I load combination is applicable.

C. Buried Structure Foundation Design

Foundations for buried structures shall be designed and detailed in accordance with *Bridge Design* and *Geotechnical Manuals* and shall include the effects of potential scour.

D. Buried Structure Wingwall and Headwall Design

Wingwalls and headwalls for buried structures shall be designed in accordance with the current versions of *Geotechnical Design Manual* M 46-03, AASHTO LRFD Chapter 11.

E. Buried Structure Seismic Design

The provisions below are the minimum seismic design requirements for conventional buried structures. Additional provisions may be specified, on a case-by-case basis, to achieve higher seismic performance criteria for essential or critical buried structures. Where such additional requirements are specified, they shall be site or project specific and are tailored to a particular structure type.

The seismic design need not be considered for buried structures with span lengths of less than 20 feet.

Buried structures greater than or equal to 20 feet shall be designed for seismic effects. Seismic design of buried structures shall be in accordance with Chapter 13 Seismic Considerations in FHWA publication FHWA-NHI-10-034, *Technical Manual for Design and Construction of Road Tunnels – Civil Elements*.

The seismic effects of transient racking/ovaling deformations on culverts and pipe structures shall be considered in addition to the normal load effects from dead loads of structural components, vertical and horizontal earth and water loads, and live load surcharges. The AASHTO LRFD Section 12.6.1 exemption from seismic loading shall not apply.

The ground motion attenuation as specified below shall be considered used for seismic design of buried structures.

Depth to Top of Buried Structure, feet	Ratio of Ground Motion at Buried Structure Depth to Motion at Ground Surface
< 20	1.0
20 to 50	0.9
50 to 100	0.8
>100	0.7

Ground Motion Attenuation with Depth
Table 8.3.3.4.E-1

For buried structures, with span lengths equal to or greater than 20 feet, the seismic effects of potential unstable ground conditions (e.g., liquefaction, liquefaction induced settlement, landslides, and fault dis-placements) on the function of the buried structures shall be considered, except liquefaction need not be considered if the liquefaction, landslides, or fault displacements do not cause life safety hazards. If the depth of fill on top of a four-sided (or other closed shape) structure is more than one-half the clear span along the skew, liquefaction induced settlement or local instability are not likely to cause life safety hazards.

F. Buried Structure Submittal Requirements

The design calculations and detailed shop drawings of buried structures shall be submitted to the Bridge and Structures Office for review and approval.

The submittal shall include the following;

1. Load rating for all buried structures with span lengths beyond 20 feet. The load rating shall be in accordance with Chapter 13.
2. Geotechnical design parameters, hydraulic analysis, including scour depth, installation procedures, backfill materials, and compacting sequences.
3. The structural adequacy of the buried structure for the required depth of fill shall be provided in the submittal.
4. Final as-built plans shall be submitted to the Bridge and Structures Office for records.

8.3.4 Design of Box Culverts

Box culverts are four-sided rigid frame structures. For span lengths equal or greater than 20 feet, box culverts shall be made either from cast-in-place (CIP) reinforced concrete or precast concrete. See Appendix 8.3-B1 to B3 for design criteria specific to concrete four sided split box culverts.

Precast concrete fabricators are responsible for the structural design and the preparation of shop plans for the precast reinforced concrete box and split box culverts designed by the prefabricators.

A. Materials

1. Concrete

Precast concrete shall be class 5000, 6000, or 7000 SCC. All cast-in-place concrete shall be class 4000.

2. Steel

Nominal yield strength for reinforcement bar shall be 60 ksi. Wire fabric of yield strength of 65 ksi may be used.

3. Cover

2” minimum cover for reinforcement at all faces.

B. Joint Design and Details

1. The joints shall be fabricated in accordance to ASTM C 1786 with tongue and groove connection. See Section 8.4 Bridge Standard Drawings for details.
2. The top slab joint shall designed as an edge beam in accordance with AASHTO Section 4.6.3.10.4, or capable of transferring a minimum of 3000 lbs per linear foot of top slab joint.
3. The grouted joint can be used for the cast-in-place concrete box culvert.

C. Connections

1. The joints between the upper and lower sections shall be designed for the lateral forces due to the seismic and soil pressures per requirements above. See *Standard Specifications* Section 7.02.3(6)C.
2. The segments at portals shall be designed for any lateral load due to the overburden.

D. Joint Filler and Cover

All joints between segments shall be sealed by joint sealant in accordance with ASTM C 990. All joints shall be wrapped with external sealing band in accordance with ASTM C 877, except the bottom slab. See Section 8.4 Bridge Standard Drawings for details.

8.3.5 Design of Precast Reinforced Concrete Three-Sided Structures

Precast reinforced concrete three sided structures shall be designed and constructed in accordance with *Standard Specifications* Section 7-02.3(6). Structures of precast reinforced concrete three-sided frame structures are chorded arch, arch, or elliptical structures. These systems require a CIP concrete or precast footing and walls. See Appendix 8.3-B1 to B3 for design criteria specific to three-sided precast concrete culverts.

A. Materials

1. Concrete

Precast concrete shall be class 5000, 6000, or 7000 SCC. All cast in place concrete shall be class 4000.

2. Steel

Nominal yield strength for reinforcement bar shall be 60 ksi. Wire fabric of yield strength of 65 ksi may be used.

3. Cover

2” minimum cover for reinforcement at all faces.

B. Joint Design and Details

1. Tongue and groove, shear key, and other types of connection can be used to control the differential settlements between segments or live load deflection. Tongue and groove connection shall be fabricated per ASTM C 1786.

2. For structures with 2' or less fill cover on top, the top slab joint of the precast box shall be designed as an edge beam in accordance with AASHTO Section 4.6.3.10.4.
3. Cast-in-place joints can be used for culverts with highway inside the structure.

C. Connections

1. For the precast three-sided culvert, the joints between the precast and wall section shall be designed for the lateral forces due to the seismic and soil pressures per requirements above with shear key, block restrainer, or dowel bars. See Section 8.4 Bridge Standard Drawings for details.
2. The segments at portals shall be designed for any lateral load due to the overburden.

D. Joint Filler and Cover

All joints between segments shall be sealed by joint sealant in accordance with ASTM C 990. All joints shall be wrapped with external sealing band in accordance with ASTM C 877. See Section 8.4 Bridge Standard Drawings for details.

8.3.6 Design of Detention Vaults

Detention vaults are used for stormwater storage and are to be watertight. These structures can be open at the top like a swimming pool, or completely enclosed and buried below ground. Detention vaults shall be designed by the AASHTO *LRFD Bridge Design Specification* and the following: Seismic design effects shall satisfy the requirements of ACI 350.3-06 "*Seismic Design of Liquid-Containing Concrete Structures*". Requirements for Joints and jointing shall satisfy the requirements of ACI 350-06. Two references for tank design are the PCA publications *Rectangular Concrete Tanks*, Revised 5th Edition (1998) and *Design of Liquid-Containing Structures for Earthquake Forces* (2002).

The geotechnical field investigations and recommendations shall comply with the requirements given in Section 8.16 of the *Geotechnical Design Manual* M 46-03. In addition to earth pressures, water tables, seismic design, and uplift, special consideration should be given to ensure differential settlement either does not occur or is included in the calculations for forces, crack control and water stops.

Buoyant forces from high ground water conditions should be investigated for permanent as well as construction load cases so the vault does not float. Controlling loading conditions may include: backfilling an empty vault, filling the vault with stormwater before it is backfilled, or seasonal maintenance that requires draining the vault when there is a high water table. In all Limit States, the buoyancy force (*WA*) load factor shall be taken as $\gamma_{WA} = 1.25$ in AASHTO LRFD Table 3.4.1-1. In the Strength Limit State, the load factors that resist buoyancy (γ_{DC}, γ_{DW}, γ_{ES}, Etc.) shall be their minimum values, in accordance with AASHTO LRFD Table 3.4.1-2 and the entire vault shall be considered empty.

During the vault construction, the water table shall be taken as the seal vent elevation or the top of the vault, if open at the top. In this case the load factors that resist buoyancy shall be their minimum values, except where specified as a construction load, in accordance with AASHTO LRFD Section 3.4.2.

In certain situations tie-downs may be required to resist buoyancy forces. The resisting force (R_n) and resistance factors (ø) for tie-downs shall be provided by the Geotechnical Engineers. The buoyancy check shall be as follows:

For Buoyancy without tie-downs:

$$(R_{RES} / R_{UPLIFT}) \geq 1.0$$

For Buoyancy with tie-downs:

$$(R_{\text{RES}} / [R_{UPLIFT} + øR_n]) \geq 1.0$$

Where:

$$R_{RES} = \left| \gamma_{DC}\, DC + \gamma_{DW}\, DW + \gamma_{ES}\, ES + \gamma_{\text{i}}\, Q_{\text{i}} \right|$$

$$R_{UPLIFT} = \left| \gamma_{\text{WA}}\, WA \right|$$

ACI 350-06 has stricter criteria for cover and spacing of joints than the AASHTO LRFD. Cover is not to be less than 2 inches (ACI 7.7.1), no metal or other material is to be within 1½ inches from the formed surface, and the maximum bar spacing shall not exceed 12 inches (ACI 7.6.5).

Crack control criteria is in accordance with AASHTO LRFD Section 5.7.3.4 with $\gamma_e = 0.5$ (in order to maintain a crack width of 0.0085 inches, in accordance with the commentary of 5.7.3.4).

Joints in the vault's top slab, bottom slab and walls shall allow dissipation of temperature and shrinkage stresses, thereby reducing cracking. The amount of temperature and shrinkage reinforcement is a function of reinforcing steel grade "and length between joints (ACI Table 7.12.2-1). All joints shall have a shear key and a continuous and integral PVC waterstop with a 4-inch minimum width. The purpose of the waterstop is to prevent water infiltration and exfiltration. Joints having welded shear connectors with grouted keyways shall use details from WSDOT Precast Prestressed Slab Details or approved equivalent, with weld ties spaced at 4′-0″ on center. Modifications to the above joints shall be justified with calculations. Calculations shall be provided for all grouted shear connections. The width of precast panels shall be increased to minimize the number of joints between precast units.

For cast-in-place walls in contact with liquid that are over 10′ in height, the minimum wall thickness is 12″. This minimum thickness is generally good practice for all external walls, regardless of height, to allow for 2 inches of cover as well as space for concrete placement and vibration.

After the forms are placed, the void left from the form ties shall be coned shaped, at least 1 inch in diameter and 1½ inches deep, to allow proper patching.

Detention vaults that need to be located within the prism supporting the roadway are required to meet the following maintenance criteria. A by-pass piping system is required. Each cell in the vault shall hold no more than 6,000 gallons of water to facilitate maintenance and cleanout operations. Baffles shall be water tight. Access hatches shall be spaced no more than 50 feet apart. There shall be an access near both the inlet and the outfall. These two accesses shall allow for visual inspection of the inlet and outfall elements, in such a manner that a person standing on the ladder, out of any standing water, will be in reach of any grab handles, grates or

screens. All other access hatches shall be over sump areas. All access hatches shall be a minimum 30 inch in diameter, have ladders that extend to the vault floor, and shall be designed to resist HS-20 wheel loads with applicable impact factors as described below.

Detention vaults that need to be located in the roadway shall be oriented so that the access hatches are located outside the traveled lanes. Lane closures are usually required next to each access hatch for maintenance and inspection, even when the hatches are in 12′-0″ wide shoulders.

A 16 kip wheel load having the dynamic load allowance for deck joints, in AASHTO LRFD Table 3.6.2.1-1, shall be applied at the top of access hatches and risers. The load path of this impact force shall be shown in the calculations.

Minimum vault dimensions shall be 4′-0″ wide and 7′-0″ tall; inside dimensions.

Original signed plans of all closed top detention vaults with access shall be forwarded to the Bridge Plans Engineer in the Bridge Asset Management Unit (see Section 12.4.10.B). This ensures that the Bridge Preservation Office will have the necessary inventory information for inspection requirements. A set of plans must be submitted to both the WSDOT Hydraulics Office and the Regional WSDOT Maintenance Office for plans approval.

8.3.7 Design of Tunnels

Tunnels are unique structures in that the surrounding ground material is the structural material that carries most of the ground load. Therefore, geology has even more importance in tunnel construction than with above ground bridge structures. In short, geotechnical site investigation is the most important process in planning, design and construction of a tunnel. These structures are designed in accordance with the AASHTO LRFD, and FHWA-NHI-10-034 *Technical Manual for Design and Construction of Roadway Tunnels - Civil Elements*.

Tunnels are not a conventional structure, and estimation of costs is more variable as size and length increase. Ventilation, safety access, fire suppression facilities, warning signs, lighting, emergency egress, drainage, operation and maintenance are extremely critical issues associated with the design of tunnels and will require the expertise of geologists, tunnel experts and mechanical engineers.

For motor vehicle fire protection, a standard has been produced by the National Fire Protection Association. NFPA 502 – *Standard for Road Tunnels, Bridges, and Other Limited Access Highways*. This document shall be used for all WSDOT tunnels. NFPA 502 – Standard for Road Tunnels, Bridges, and Other Limited Access Highways, uses tunnel length to dictate minimum fire protection requirements:

300 feet or less: no fire protection requirements
300 to 800 feet: minor fire protection requirements
800 feet or more: major fire protection requirements

Some recent WSDOT tunnel projects are:

I-90 Mt. Baker Ridge Tunnel Bore Contract: 3105 Bridge No.: 90/24N

This 1500 foot long tunnel is part of the major improvement of Interstate 90. Work was started in 1983 and completed in 1988. The net interior diameter of the bored portion, which is sized for vehicular traffic on two levels with a bike/pedestrian corridor on the third level, is 63.5 feet. The project is the world's largest diameter tunnel in soft ground, which is predominantly stiff clay. Construction by a stacked-drift method resulted in minimal distortion of the liner and insignificant disturbance at the ground surface above.

Jct I-5 SR 526 E-N Tunnel Ramp Contract: 4372 Bridge No.: 526/22E-N

This 465 foot long tunnel, an example of the cut and cover method, was constructed in 1995. The interior dimensions were sized for a 25 foot wide one lane ramp roadway with a vertical height of 18 feet. The tunnel was constructed in three stages. 3 and 4 foot diameter shafts for the walls were placed first, a 2 foot thick cast-in-place top slab was placed second and then the tunnel was excavated, lined and finished.

I-5 Sleater-Kinney Bike/Ped. Tunnel Contract: 6031 Bridge No.: 5/335P

This 122 foot long bike and pedestrian tunnel was constructed in 2002 to link an existing path along I-5 under busy Sleater-Kinney Road. The project consisted of precast prestressed slab units and soldier pile walls. Construction was staged to minimize traffic disruptions.

8.4 Bridge Standard Drawings

Cable Fence

8.1-A6-1	Cable Fencing for Wall
8.1-A6-2	Cable Fencing for Wall w/Top Mounted Base
8.1-A6-3	Cable Fence Details 1 of 3
8.1-A6-4	Cable Fence Details 2 of 3
8.1-A6-5	Cable Fence Details 3 of 3

Soil Nail Wall

8.1-A4-1	Soil Nail Wall, 1 of 3
8.1-A4-2	Soil Nail Wall, 2 of 3
8.1-A4-3	Soil Nail Wall, 3 of 3

TieBack Walls

8.1-A2-1	SEW Wall Elevation
8.1-A2-2	SEW Wall Section
8.1-A3-1	Soldier Pile/Tieback Wall Elevation
8.1-A3-2	Soldier Pile/Tieback Walls Details A
8.1-A3-3	Soldier Pile/Tieback Walls Details B
8.1-A3-4	Soldier Pile/Tieback Walls Details
8.1-A3-5	Soldier Pile/Tieback Walls Fascia Panel Details
8.1-A3-6	Soldier Pile/Tieback Wall Perm Ground Anchor Details

Noise Barrier

8.1-A5-1	Noise Barrier on Bridge

Buried Structures

8.3.2-A1	Precast Split Box Typical Section
8.3.2-A2	Typical 3-Sided Precast Culvert Section and Table
8.3.2-A3	3-Sided Precast Culvert Series FC20 to FC40, and SB20 and SB25
8.3.2-A4	3-Sided Precast Culvert Series VC45 to VC50
8.3.2-A5	3-Sided Precast Culvert Series VC55 to VC60
8.3.2-A6	3-Sided Precast Culvert Footing Joint Connection Details
8.3.2-A7	3-Sided Precast Culvert Panel Joint Connection Details
8.3.2-A8	Precast Split Box Culvert Joint Seal Details
8.3.2-A9	Example of Precast Split Box Culvert Layout
8.3.2-A10	Example of Precast Split Box Culvert Typical Section
8.3.2-A11	Example of Precast Split Box Culvert Reinforcement Details
8.3.2-A12	Example of Precast Split Box Culvert Connection Details

8.5 Appendices

Appendix 8.1-A1 Summary of Design Specification Requirements for Walls

Wall Types	Design Specifications	
Pre-Approved Proprietary Structural Earth Walls	General	Design shall be based on current editions, including current interims, of the following documents; AASHTO Standard Specifications for Highway Bridges - 17th Edition for projects initiated prior to October 1, 2010. AASHTO *LRFD Bridge Design Specifications* for projects initiated after October 1, 2010, WSDOT *Geotechnical Design Manual* (GDM) and WSDOT *Bridge Design Manual* (BDM).
	Seismic	AASHTO Guide Specifications for LRFD Seismic Bridge Design using the USGS 2014 Seismic Hazard Maps with Seven Percent Probability of Exceedance in 75 yrs (1000 yr Return Period) and the site coefficients or site-specific procedure provided in the WSDOT Design Memorandum dated January 8, 2017 and WSDOT BDM Chapter 4.
	Traffic Barrier	Moment slab barrier shall be designed in accordance with the WSDOT BDM and the AASHTO *LRFD Bridge Design Specifications* Section A13.3 for Concrete Railings considering a minimum TL-4 impact load, unless otherwise specified in the Contract Plans or Contract Special Provisions.
Non-Preapproved Proprietary Structural Earth Walls	General	Design shall be based on current editions, including current interims, of the following documents; AASHTO *LRFD Bridge Design Specifications*, WSDOT GDM and WSDOT BDM.
	Seismic	AASHTO Guide Specifications for LRFD Seismic Bridge Design using the USGS 2014 Seismic Hazard Maps with Seven Percent Probability of Exceedance in 75 yrs (1000 yr Return Period) and the site coefficients or site-specific procedure provided in the WSDOT Design Memorandum dated January 8, 2017 and WSDOT BDM Chapter 4.
	Traffic Barrier	Moment slab barrier shall be designed in accordance with the WSDOT BDM and the AASHTO *LRFD Bridge Design Specifications* Section A13.3 for Concrete Railings considering a minimum TL-4 impact load, unless otherwise specified in the Contract Plans or Contract Special Provisions.
Standard Plan Geosynthetic Walls	General	Current Standard Plan walls are designed in accordance with AASHTO *LRFD Bridge Design Specifications* 5th Edition 2010 and interims through 2011 and the WSDOT GDM through 2011.
	Seismic	AASHTO Guide Specifications for LRFD Seismic Bridge Design using 2002 U.S. Geological Survey (USGS) National Seismic Hazard Model (NSHM).
	Traffic Barrier	For Standard Plan Geosynthetic walls use Standard Plan D-3.15, D-3.16, or D-3.17 for traffic barriers. Special design barriers to be constructed on Standard Plan or Non-Standard Geosynthetic Walls shall be designed in accordance with the WSDOT BDM and the AASHTO *LRFD Bridge Design Specifications* Section A13.3 for Concrete Railings considering a minimum TL-4 impact load.
Non-Standard Geosynthetic Walls	General	Design shall be based on current editions, including current interims, of the following documents; AASHTO LRFD Bridge Design Specifications, WSDOT GDM and WSDOT BDM
	Seismic	AASHTO Guide Specifications for LRFD Seismic Bridge Design using the USGS 2014 Seismic Hazard Maps with Seven Percent Probability of Exceedance in 75 yrs (1000 yr Return Period) and the site coefficients or site-specific procedure provided in the WSDOT Design Memorandum dated January 8, 2017 and WSDOT BDM Chapter 4.
	Traffic Barrier	Special design barriers to be constructed on Standard Plan or Non-Standard Geosynthetic Walls shall be designed in accordance with the WSDOT BDM and the AASHTO *LRFD Bridge Design Specifications* Section A13.3 for Concrete Railings considering a minimum TL-4 impact load.

Wall Types	Design Specifications	
Standard Plan Reinforced Concrete Cantilever Walls	General	Current Standard Plan walls are designed in accordance with AASHTO *LRFD Bridge Design Specifications* 4th Edition 2007 and interims through 2008 and the WSDOT GDM November 2008.
	Seismic	AASHTO Guide Specifications for LRFD Seismic Bridge Design using 2002 U.S. Geological Survey (USGS) National Seismic Hazard Model (NSHM).
	Traffic Barrier	Current Standard Plan walls are designed for TL-4 impact loading distributed over 48 ft at the base of wall
Non-Standard Reinforced Concrete Cantilever Walls	General	Non-standard reinforced concrete cantilever walls shall be designed in accordance with the current editions, including current interims, of the following documents; AASHTO LRFD Bridge Design Specifications, WSDOT GDM and WSDOT BDM.
	Seismic	AASHTO Guide Specifications for LRFD Seismic Bridge Design using the USGS 2014 Seismic Hazard Maps with Seven Percent Probability of Exceedance in 75 yrs (1000 yr Return Period) and the site coefficients or site-specific procedure provided in the WSDOT Design Memorandum dated January 8, 2017 and WSDOT BDM Chapter 4.
	Traffic Barrier	WSDOT BDM and the AASHTO *LRFD Bridge Design Specifications* Section A13.3 for Concrete Railings considering a minimum TL-4 impact load. Ft is distributed over Lt at the top of barrier. Load from top of barrier is distributed at a 45 degree angle into the wall.
Soldier Pile Walls With and Without Tie-Backs	General	Design shall be based on current editions, including current interims, of the following documents; AASHTO LRFD Bridge Design Specifications, WSDOT GDM and WSDOT BDM.
	Seismic	AASHTO Guide Specifications for LRFD Seismic Bridge Design using the USGS 2014 Seismic Hazard Maps with Seven Percent Probability of Exceedance in 75 yrs (1000 yr Return Period) and the site coefficients or site-specific procedure provided in the WSDOT Design Memorandum dated January 8, 2017 and WSDOT BDM Chapter 4.
	Traffic Barrier	AASHTO *LRFD Bridge Design Specifications* Section A13.3 for Concrete Railings considering a minimum TL-4 impact load. Ft is distributed over Lt at the top of barrier. Load from top of barrier is distributed downward into the wall spreading at a 45 degree angle.
Standard Plan Noise Barrier Walls	General	Current Standard Plans D-2.04 through D-2.34, D-2.42, D-2.44, and D-2.48 through D-2.68 are designed in accordance with AASHTO Guide Specifications for Structural Design of Sound Barriers – 1989 & Interims. Standard Plans D-2.36 and D-2.46 are designed in accordance with AASHTO *LRFD Bridge Design Specifications* 6th Edition 2012 and interims through 2013.
	Seismic	Current Standard Plans D-2.04 through D-2.34, D-2.42, D-2.44, and D-2.48 through D-2.68 are designed in accordance with AASHTO Guide Specifications for Structural Design of Sound Barriers – 1989 & Interims. Standard Plans D-2.36 and D-2.46 are designed in accordance with AASHTO *LRFD Bridge Design Specifications* 1000 year map design acceleration.
	Traffic Barrier	AASHTO Guide Specifications for Structural Design of Sound Barriers – 1989 & Interims. Standard Plan D-2.46 traffic barrier is designed as stated in the WSDOT BDM Chapter 8.

Wall Types	Design Specifications	
Non-Standard Noise Barrier Walls	**General**	Design shall be based on current editions, including current interims, of the following documents; AASHTO LRFD Bridge Design Specifications, WSDOT GDM and WSDOT BDM.
	Seismic	AASHTO Guide Specifications for LRFD Seismic Bridge Design using the USGS 2014 Seismic Hazard Maps with Seven Percent Probability of Exceedance in 75 yrs (1000 yr Return Period) and the site coefficients or site-specific procedure provided in the WSDOT Design Memorandum dated January 8, 2017 and WSDOT BDM Chapter 4.
	Traffic Barrier	WSDOT BDM and the AASHTO *LRFD Bridge Design Specifications* Section A13.3 for Concrete Railings considering a minimum TL-4 impact load.
Soil Nail Walls	**General**	All soil nail walls and their components shall be designed using the publication "Geotechnical Engineering Circular No. 7" FHWA-NHI-14-007. The Geotechnical Engineer completes the internal design of the soil nail wall and provides recommendations for nail layout. The structural designer will layout the nail pattern. The geotechnical engineer will review the nail layout to insure compliance with the Geotechnical recommendations. The structural designer shall design the temporary shotcrete facing as well as the permanent structural facing, including the bearing plates, and shear studs. The upper cantilever of the facing that is located above the top row of nails shall be designed in accordance with current editions, including current interims, of the following documents; AASHTO LRFD Bridge Design Specifications, WSDOT GDM and WSDOT BDM.
	Seismic	AASHTO Guide Specifications for LRFD Seismic Bridge Design using the USGS 2014 Seismic Hazard Maps with Seven Percent Probability of Exceedance in 75 yrs (1000 yr Return Period) and the site coefficients or site-specific procedure provided in the WSDOT Design Memorandum dated January 8, 2017 and WSDOT BDM Chapter 4.
	Traffic Barrier	Moment slab barrier shall be designed in accordance with the WSDOT BDM and the AASHTO *LRFD Bridge Design Specifications* Section A13.3 for Concrete Railings considering a minimum TL-4 impact load
Non-Standard Non Proprietary Walls Gravity Blocks, Gabion Walls	**General**	Design shall be based on current editions, including current interims, of the following documents; AASHTO LRFD Bridge Design Specifications, WSDOT GDM and WSDOT BDM.
	Seismic	AASHTO Guide Specifications for LRFD Seismic Bridge Design using the USGS 2014 Seismic Hazard Maps with Seven Percent Probability of Exceedance in 75 yrs (1000 yr Return Period) and the site coefficients or site-specific procedure provided in the WSDOT Design Memorandum dated January 8, 2017 and WSDOT BDM Chapter 4.
	Traffic Barrier	WSDOT BDM and the AASHTO *LRFD Bridge Design Specifications* Section A13.3 for Concrete Railings considering a minimum TL-4 impact load.

8.99 References

1. AASHTO LRFD, 5th Edition, American Association of State Highway and Transportation Officials, Washington, D.C.
2. AASHTO *Standard Specifications for Highway Bridges*, 17th Ed., 2002
3. WSDOT *Standard Specifications for Highway Bridges and Municipal Construction*, Olympia, Washington 98501.
4. ACI 350/350R-06 Code Requirements for Environmental Engineering Concrete Structures, ACI, 2006.
5. Munshi, Javeed A. *Rectangular Concrete Tanks*, Rev. 5th Ed., PCA, 1998.
6. Miller, C. A. and Constantino, C. J. "Seismic Induced Earth Pressure in Buried Vaults", PVP-Vol.271, *Natural Hazard Phenomena and Mitigation*, ASME, 1994, pp. 3-11.
7. Munshi, J. A. *Design of Liquid-Containing Concrete Structures for Earthquake Forces*, PCA, 2002.
8. NFPA 502, *Standard for Road Tunnels, Bridges, and Other Limited Access Highways*.

This page intentionally left blank.

Chapter 9 Bearings and Expansion Joints Contents

9.1 Expansion Joints 9-1
9.1.1 General Considerations 9-1
9.1.2 General Design Criteria 9-3
9.1.3 Small Movement Range Joints 9-4
9.1.4 Medium Movement Range Joints 9-11
9.1.5 Large Movement Range Joints 9-15

9.2 Bearings 9-22
9.2.1 General Considerations 9-22
9.2.2 Force Considerations 9-22
9.2.3 Movement Considerations 9-23
9.2.4 Detailing Considerations 9-23
9.2.5 Bearing Types 9-24
9.2.6 Miscellaneous Details 9-30
9.2.7 Contract Drawing Representation 9-31
9.2.8 Shop Drawing Review 9-31
9.2.9 Bearing Replacement Considerations 9-32

9.3 Seismic Isolation Bearings 9-33
9.3.1 General Considerations 9-33
9.3.2 General Design Criteria 9-34
9.3.3 Seismic Isolation Bearing Submittal Requirements 9-34
9.3.4 Seismic Isolation Bearing Review Process 9-35
9.3.5 Seismic Isolation Bearing Inspection 9-37

9.4 Bridge Standard Drawings 9-38
Expansion Joints 9-38

Chapter 9 Bearings and Expansion Joints

9.1 Expansion Joints

9.1.1 General Considerations

All bridges must accommodate, in some manner, environmentally and self-imposed phenomena that tend to make structures move in various ways. These movements come from several primary sources: thermal variations, concrete shrinkage, creep effects from prestressing, and elastic post-tensioning shortening. With the exception of elastic post-tensioning shortening, which generally occurs before expansion devices are installed, movements from these primary phenomena are explicitly calculated for expansion joint selection and design. Other movement inducing phenomena include live loading (vertical and horizontal braking), wind, seismic events, and foundation settlement. Movements associated with these phenomena are generally either not calculated or not included in total movement calculations for purposes of determining expansion joint movement capacity.

With respect to seismic movements, it is assumed that some expansion joint damage may occur, that this damage is tolerable, and that it will be subsequently repaired. In cases where seismic isolation bearings are used, the expansion joints must accommodate seismic movements in order to allow the isolation bearings to function properly.

Expansion joints must accommodate cyclic and long-term structure movements in such a way as to minimize imposition of secondary stresses in the structure. Expansion joint devices must prevent water, salt, and debris infiltration to substructure elements below. Additionally, an expansion joint device must provide a relatively smooth riding surface over a long service life.

Expansion joint devices are highly susceptible to vehicular impact that results as a consequence of their inherent discontinuity. Additionally, expansion joints have often been relegated a lower level of importance by both designers and contractors. Many of the maintenance problems associated with in-service bridges relate to expansion joints.

One solution to potential maintenance problems associated with expansion joints is to use construction procedures that eliminate the joints from the bridge deck. The two most commonly used methods are called integral and semi-integral construction. These two terms are sometimes collectively referred to as jointless bridge construction.

In integral construction, concrete end diaphragms are cast monolithically with both the bridge deck and supporting pile substructure. In order to minimize secondary stresses induced in the superstructure, steel piles are generally used in their weak axis orientation relative to the direction of bridge movement. In semi-integral construction, concrete end diaphragms are cast monolithically with the bridge deck. Supporting girders rest on elastomeric bearings within an L-type abutment. Longer semi-integral bridges generally have reinforced concrete approach slabs at their ends. Approach slab anchors, in conjunction with a compression seal device, connect the monolithic end diaphragm to the approach slab. Longitudinal movements are accommodated by diaphragm movement relative to the approach slab, but at the same time resisted by soil passive pressure against the end diaphragm.

Obviously, bridges cannot be built incrementally longer without eventually requiring expansion joint devices. The incidence of approach pavement distress problems increases markedly with increased movement that must be accommodated by the end diaphragm pressing against the backfill. Approach pavement distress includes pavement and backfill settlement and broken approach slab anchors.

Washington State Department of Transportation (WSDOT) has implemented jointless bridge design by using semi-integral construction. Office policy for concrete and steel bridge design is as follows:

A. Concrete Bridges

Semi-integral design is used for prestressed concrete girder bridges under 450 feet long and for post-tensioned spliced concrete girder and cast-in-place post-tensioned concrete box girder bridges under 400 feet long. Use L-type abutments with expansion joints at the bridge ends where bridge length exceeds these values. In situations where bridge skew angles exceed 30 degrees, consult the Bearing and Expansion Joint Specialist and the Bridge Design Engineer for recommendations and approval.

B. Steel Bridges

Use L-type abutments with expansion joints at the ends for multiple-span bridges. Semi-integral construction may be used in lieu of expansion joints for single span bridges under 300 feet with the approval of the Bridge Design Engineer. In situations where the bridge skew exceeds 30 degrees, consult the Bearing and Expansion Joint Specialist and the Bridge Design Engineer for recommendations and approval.

In all instances, the use of intermediate expansion joints should be avoided wherever possible. The following table provides guidance regarding maximum bridge superstructure length beyond which the use of either intermediate expansion joints or modular expansion joints at the ends is required.

Superstructure Type	Maximum Length (Western WA)		Maximum Length (Eastern WA)	
	Semi-Integral	L-Abutment	Semi-Integral	L-Abutment
Concrete Superstructure				
Prestressed Girder*	450 ft	900 ft	450 ft	900 ft
P.T. Spliced Girder**	400 ft	700 ft***	400 ft	700 ft***
C.I.P.–P.T. box girder	400 ft	700 ft ***	400 ft	700 ft***
Steel Superstructure				
Plate Girder Box girder	300 ft	1,000 ft	300 ft	800 ft

* Based upon 0.16 in. creep shortening per 100 feet of superstructure length and 0.12 inch shrinkage shortening per 100 feet of superstructure length

** Based upon 0.31 in. creep shortening per 100 feet of superstructure length and 0.19 inch shrinkage shortening per 100 feet of superstructure length

*** Can be increased to 800 ft. if the joint opening at 64º F at time of construction is specified in the expansion joint table to be less than the minimum installation width of 1½ inches. This condition is acceptable if the gland is already installed when steel shapes are placed in the blockout. Otherwise (for example, staged construction) the gland would need to be installed at temperature less than 45º F.

Because the movement restriction imposed by a bearing must be compatible with the movements allowed by the adjacent expansion joint, expansion joints and bearings must be designed interdependently and in conjunction with the anticipated behavior of the overall structure.

A plethora of manufactured devices exists to accommodate a wide range of expansion joint total movements. Expansion joints can be broadly classified into three categories based upon their total movement range as follows:

Small Movement Joints	Total Movement Range < 1¾ in.
Medium Movement Joints	1¾ in. < Total Movement Range < 5 in.
Large Movement Joints	Total Movement Range > 5 in.

9.1.2 General Design Criteria

Expansion joints must be sized to accommodate the movements of several primary phenomena imposed upon the bridge following installation of its expansion joint devices. Concrete shrinkage, thermal variation, and long-term creep are the three most common primary sources of movement. Calculation of the movements associated with each of these phenomena must include the effects of superstructure type, tributary length, fixity condition between superstructure and substructure, and pier flexibilities.

A. Shrinkage Effects

Accurate calculation of shrinkage as a function of time requires that average ambient humidity, volume-to-surface ratios, and curing methods be taken in consideration as summarized in LRFD Article 5.4.2.3.3. Because expansion joint devices are generally installed in their respective blockouts at least 30 to 60 days following concrete deck placement, they must accommodate only the shrinkage that occurs from that time onward. For most situations, that shrinkage strain can be assumed to be 0.0002 for normal weight concrete in an unrestrained condition. This value must be corrected for restraint conditions imposed by various superstructure types.

$$\otimes_{shrink} = \beta \cdot \mu \cdot L_{trib} \qquad (9.1.2\text{-}1)$$

Where:

L_{trib} = Tributary length of the structure subject to shrinkage

β = Ultimate shrinkage strain after expansion joint installation; estimated as 0.0002 in lieu of more refined calculations

μ = Restraint factor accounting for the restraining effect imposed by superstructure elements installed before the concrete slab is cast

= 0.0 for steel girders, 0.5 for precast prestressed concrete girders, 0.8 for concrete box girders and T-beams, 1.0 for concrete flat slabs

B. Thermal Effects

Bridges are subject to all modes of heat transfer: radiation, convection, and conduction. Each mode affects the thermal gradients generated in a bridge superstructure differently. Climatic influences vary geographically resulting in different seasonal and diurnal average temperature variations. Additionally, different types of construction have different thermal "inertia" properties. For example, a massive concrete box girder bridge will be much slower to respond to an imposed thermal stimulus than would a steel plate girder bridge composed of many relatively thin steel elements**.**

Variation in the superstructure average temperature produces elongation or shortening. Therefore, thermal movement range is calculated using the maximum and minimum anticipated bridge superstructure average temperatures anticipated during the structure's lifetime. The considerations in the preceding paragraph have led to the following maximum and minimum anticipated bridge superstructure average temperature guidelines for design in Washington State:

Concrete Bridges:	0°F to 100°F
Steel Bridges (eastern Washington)	-30°F to 120°F
Steel Bridges (western Washington)	0°F to 120°F

Total thermal movement range is then calculated as:

$$\otimes_{temp} = \alpha \cdot L_{trib} \cdot \delta T \qquad (9.1.2\text{-}2)$$

Where:

L_{trib} = Tributary length of the structure subject to thermal variation
α = Coefficient of thermal expansion; 0.000006 in./in./°F for concrete and 0.0000065 in./in./°F for steel
δT Bridge superstructure average temperature range as a function of bridge type and location

In accordance with *Standard Specifications*, contract drawings state dimensions at a normal temperature of 64°F unless specifically noted otherwise. Construction and fabrication activities at average temperatures other than 64°F require the Contractor or fabricator to adjust lengths of structural elements and concrete forms accordingly.

Some expansion joint devices are installed in pre-formed concrete blockouts sometime after the completion of the bridge deck. The expansion joint device must be cast into its respective blockout with a gap setting corresponding to the ambient superstructure average temperature at the time the blockouts are filled with concrete. In order to accomplish this, expansion device gap settings must be specified on the contract drawings as a function of superstructure ambient average temperature. Generally, these settings are specified for temperatures of 40°F, 64°F, and 80°F.

9.1.3 Small Movement Range Joints

Elastomeric compression seals, poured sealants, asphaltic plugs, pre-formed closed cell foam, epoxy-bonded elastomeric glands, steel sliding plates, and bolt-down elastomeric panels have all been used in the past for accommodating small movement ranges. The current policy is to use compression seals and rapid-cure silicone sealants almost exclusively.

A. Compression Seals

Compression seals are continuous manufactured elastomeric elements, typically with extruded internal web systems, installed within an expansion joint gap to effectively seal the joint against water and debris infiltration. Compression seals are held in place by mobilizing friction against adjacent vertical joint faces. Design philosophy requires that they be sized and installed to always be in a state of compression.

Compression seals can be installed against smooth vertical concrete faces or against steel armoring. When installed against concrete, special concrete nosing material having enhanced impact resistance is typically used. Polymer concrete, polyester concrete, and elastomeric concrete have been used with varying degrees of successful performance. Consult the Bearing and Expansion Joint Specialist for current policy.

Each elastomeric compression seal shall be furnished and installed as a single, continuous piece across the full width of the bridge deck. No field splices of the compression seal shall be allowed. For widening projects, a new compression seal shall be furnished and installed as a single, continuous piece across the full width of the original and widened portions of the roadway. Field splicing to the original elastomeric compression seal shall not be allowed.

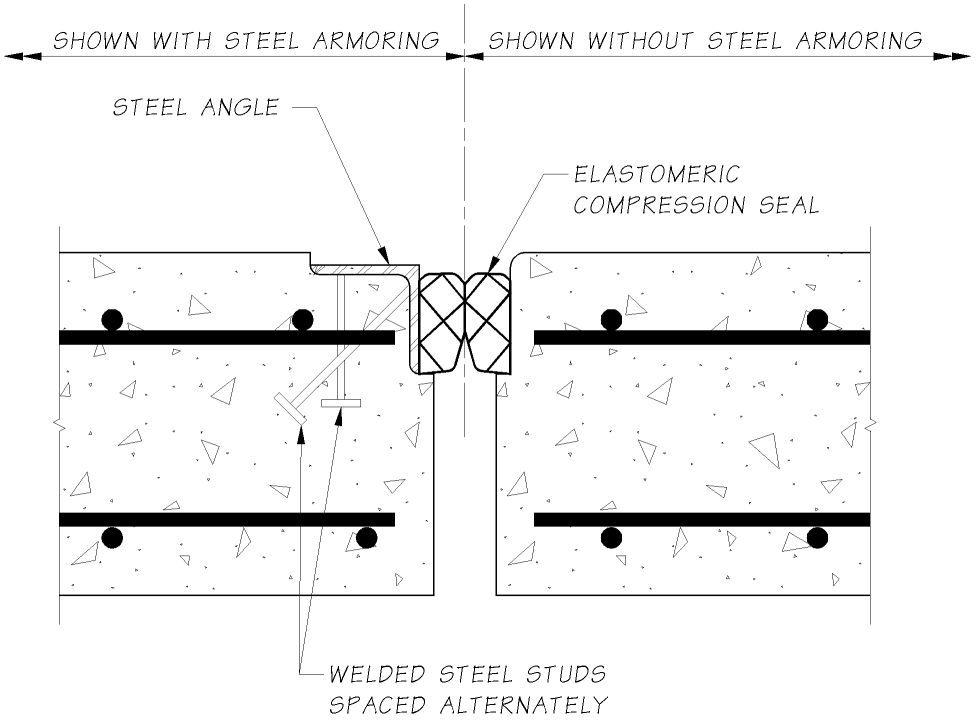

Compression Seal Joint
Figure 9.1.3-1

In design calculations, the minimum and maximum compressed widths of the seal are generally set at 40 percent and 85 percent of the uncompressed width. These measurements are perpendicular to the joint axis. It is generally assumed that the compressed seal width at the normal construction temperature of 64°F is 60 percent of its uncompressed width. For skewed joints, bridge deck movement must be separated into components perpendicular to and parallel to the joint axis. Shear displacement of the compression seal should be limited to a specified percentage of its uncompressed width, usually set at about 22 percent. Additionally, the expansion gap width should be set so that the compression seal can be replaced over a reasonably wide range of construction temperatures. Manufacturers' catalogues generally specify the minimum expansion gap widths into which specific size compression seals can be installed. The expansion gap width should be specified on the contract drawings as a function of the superstructure average temperature.

Compression seal movement design relationships can be expressed as:

$\otimes_{temp\text{-}normal} = \otimes_{temp} \cdot \cos\theta$ [thermal movement normal to joint]
$\otimes_{temp\text{-}parallel} = \otimes_{temp} \cdot \sin\theta$ [thermal movement parallel to joint]
$\otimes_{shrink\text{-}normal} = \otimes_{shrink} \cdot \cos\theta$ [shrinkage movement normal to joint]
$\otimes_{shrink\text{-}parallel} = \otimes_{shrink} \cdot \sin\theta$ [shrinkage movement parallel to joint]
$W_{min} = W_{install} - [(T_{max}-T_{install})/(T_{max}-T_{min})] \cdot \Delta_{temp\text{-}normal} > 0.40 \cdot W$
$W_{max} = W_{install} + [(T_{install}-T_{min})/(T_{max}-T_{min})] \cdot \Delta_{temp\text{-}normal} + \Delta_{shrink\text{-}normal} < 0.85 \cdot W$

Where:

θ = skew angle of the expansion joint, measured with respect to a line perpendicular to the bridge longitudinal axis

W = uncompressed width of the compression seal
$W_{install}$ = expansion gap width at installation
$T_{install}$ = superstructure temperature at installation
W_{min} = minimum expansion gap width
W_{max} = maximum expansion gap width
T_{min} = minimum superstructure average temperature
T_{max} = maximum superstructure average temperature

Algebraic manipulation yields:

$$W > (\otimes_{temp\text{-}normal} + \otimes_{shrink\text{-}normal})/0.45$$

$$W > (\otimes_{temp\text{-}parallel} + \otimes_{shrink\text{-}parallel})/0.22$$

Now, assuming $W_{install} = 0.6 \cdot W$,

$$W_{max} = 0.6 \cdot W + [(T_{install} - T_{min})/(T_{max} - T_{min})] \cdot \otimes_{temp\text{-}normal} + \otimes_{shrink\text{-}normal} < 0.85 \cdot W$$

Rearranging yields:

$$W > 4 \cdot [(T_{install} - T_{min})/(T_{max} - T_{min}) \cdot \otimes_{temp\text{-}normal} + \otimes_{shrink\text{-}normal}]$$

Design Example:

Given: A reinforced concrete box girder bridge has a total length of 200 feet. A compression seal expansion joint at each abutment will accommodate half of the total bridge movement. The abutments and expansion joints are skewed 15°. Bridge superstructure average temperatures are expected to range between 0°F and 100°F.

Find: Required compression seal size and construction gap widths at 40°F, 64°F, and 80°F.

Solution:

Step 1: Calculate temperature and shrinkage movement.

Temperature: $\otimes_{temp} = ½(.000006)(100°F)(200')(12''/')$ $= 0.72''$
Shrinkage: $\otimes_{shrink} = ½(.0002)(0.8)(200')(12''/')$ $= \underline{0.19''}$
Total deck movement at the joint: $= 0.91''$

$\otimes_{temp\text{-}normal} + \otimes_{shrink\text{-}normal} = (0.91'')(\cos 15°) = 0.88''$

$\otimes_{temp\text{-}parallel} + \otimes_{shrink\text{-}parallel} = (0.91'')(\sin 15°) = 0.24''$

Step 2: Determine compression seal width required.

$W > 0.88''/0.45 = 1.96''$

$W > 0.24''/0.22 = 1.07''$

$W > 4[(64°F–0°F)/(100°F–0°F) \cdot (0.72'') + 0.19'']\ (\cos 15°) = 2.51''$
$\rightarrow$Use a 3″ compression seal

Step 3: Evaluate construction gap widths for various temperatures for a 3 inch compression seal.

Construction width at 64°F = $0.6(3'') = 1.80''$

Construction width at 40°F = $1.80'' + [(64°–40°)/(100° + 0°)]\cdot(0.72'')\cdot(\cos 15°) = 1.97''$

Construction width at 80°F = $1.80'' - [(80°–64°)/(100° + 0°)]\cdot(0.72'')\cdot(\cos 15°) = 1.69''$

Conclusion: Use a 3 inch compression seal. Construction gap widths for installation at temperatures of 40°F, 64°F, and 80°F are 2 inches, 1 13/16 inches, and 1 11/16 inches respectively.

B. Rapid-Cure Silicone Sealants

Durable low-modulus poured sealants provide watertight expansion joint seals in both new construction and rehabilitation projects. Most silicone sealants possess good elastic performance over a wide range of temperatures while demonstrating high levels of resistance to ultraviolet and ozone degradation. Other desirable properties include self-leveling and self-bonding characteristics.

Rapid-cure silicone sealants are particularly good candidates for rehabilitation in situations where significant traffic disruption consequential to extended traffic lane closure is unacceptable. Additionally, unlike compression seals, rapid-cure silicone sealants do not require straight, parallel substrate surfaces in order to create a watertight seal.

Rapid-cure silicone sealants can be installed against either concrete or steel. It is extremely critical that concrete or steel substrates be thoroughly cleaned before the sealant is installed. Some manufacturers require application of specific primers onto substrate surfaces prior to sealant installation in order to enhance bonding.

Consult the Bearing and Expansion Joint Specialist for specifics.

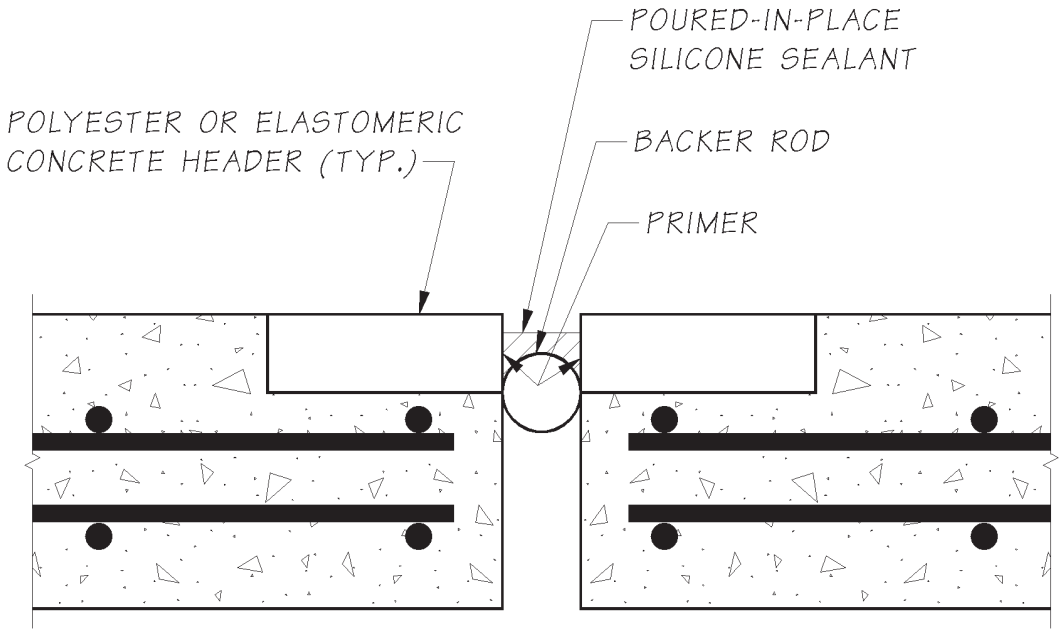

Rapid-cure Silicone Sealants Joint
Figure 9.1.3-2

Rapid-cure silicone sealants should be designed based upon the manufacturer's recommendations. Maximum and minimum working widths of the poured sealant joint are generally recommended as a percentage of the sealant width at installation. Depending upon the manufacturer, these joints can accommodate tensile movements of up to 100 percent and compressive movements of up to 50 percent of the sealant width at installation. A minimum recess is typically required between the top of the roadway surface and the top of the sealant surface. This recess is critical in assuring that tires will not contact the top surface of the sealant and initiate its debonding from substrate material.

Design Example:

Given: An existing 25-year-old 160 foot long single span prestressed concrete girder bridge is scheduled for a concrete overlay. The existing compression seals at each non-skewed abutment are in poor condition, although the existing concrete edges on each side of each expansion joint are in relatively good condition. The expansion gaps at these abutments are 1 inch wide at a normal temperature of 64°F. Assume that each expansion joint will accommodate half of the total bridge movement. Bridge superstructure average temperatures are expected to range between 0°F and 100°F.

Find: Determine the feasibility of reusing the existing 1 inch expansion gaps for a rapid cure silicone sealant system retrofit. Assume that the sealant will be installed at an average superstructure temperature between 40°F and 80°F. Manufacturer's recommendations state that Sealant A can accommodate 100 percent tension and 50 percent compression and that Sealant B can accommodate 50 percent tension and 50 percent compression.

Solution:

Step 1: Calculate future temperature, shrinkage, and creep movements.

Temperature: Δ_{temp} = ½ (.000006)(100°F)(160′)(12″/′) = 0.58″
Shrinkage: Δ_{shrink} = 0 (Essentially all shrinkage has already occurred.)
Creep: Δ_{creep} = 0 (Essentially all creep has already occurred.)

Step 2: Calculate existing expansion gap widths at average superstructure temperatures of 40°F and 80°F. These are estimated extreme sealant installation temperatures.

G_{40F} = 1.00″ + [(64°F - 4 0°F)/(100°F - 0°F)] · (.58″) = 1.14″
G_{80F} = 1.00″ - [(80°F - 64°F)/(100°F - 0°F)] · (.58″) = 0.91″

Step 3: Check sealant capacity if installed at 40°F.

Closing movement = [(100°F - 40°F)/(100°F - 0°F)](.58″) = 0.35″
0.35″/1.14″ = 0.31 < 0.50 Sealants A and B
Opening movement = [(40°F - 0°F)/(100°F - 0°F)](.58″) = 0.23″
0.23″/1.14″ = 0.20 < 1.00 Sealant A< 0.50 Sealant B

Step 4: Check sealant capacity if installed at 80°F.

Closing movement = = [(100°F - 80°F)/(100°F - 0°F)](.58″) = 0.12″
0.12″/0.91″ = 0.13 < 0.50 Sealants A and B
Opening movement = [(80°F - 0°F)/(100°F - 0°F)](.58″) = 0.46″
0.46″/0.91″ = 0.50 < 1.00 Sealant A
= 0.50 Sealant B

Conclusion: The existing 1 inch expansion gap is acceptable for installation of a rapid cure silicone sealant system. Note that Sealant B would reach its design opening limit at 0°F if it were installed at a superstructure average temperature of 80°F. Expansion gap widths at temperatures other than the normal temperature are generally not specified on rapid cure silicone sealant retrofit plans.

C. Asphaltic Plug Joints

Asphaltic plug joints consist of a flexible polymer modified asphalt installed in a preformed blockout atop a steel plate and backer rod. In theory, asphaltic plug joints provided a seamless smooth riding surface. However, when subjected to high traffic counts, heavy trucks, or substantial acceleration/deceleration traction, the polymer modified asphalt tends to creep, migrating out of the blockouts. As a consequence, WSDOT no longer specifies the use of asphaltic plug joints.

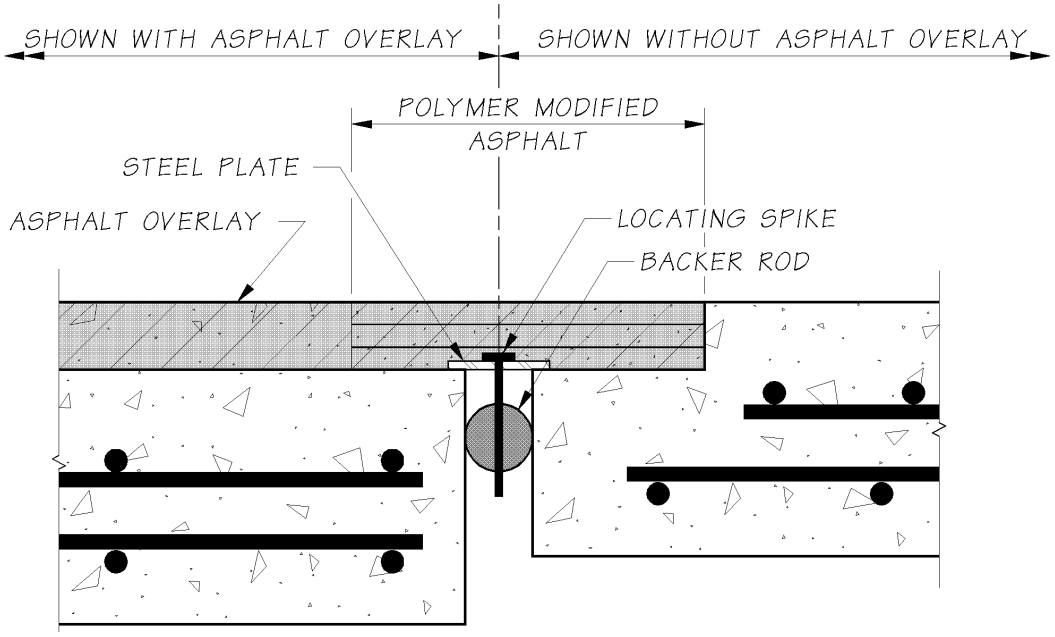

Asphaltic Plug Joint
Figure 9.1.3-3

D. Headers

Expansion joint headers for new construction are generally the same Class 4000D structural concrete as used for the bridge deck and cast integrally with the deck.

Expansion joint headers installed as part of a rehabilitative and/or overlay project are constructed differently.

Being a flexible material, hot mix asphalt (HMA) cannot provide rigid lateral support to an elastomeric compression seal or a rapid cure silicone sealant bead. Therefore, rigid concrete headers must be constructed on each side of such an expansion joint when an HMA overlay is installed atop an existing concrete deck. These headers provide a rigid lateral support to the expansion joint device and serve as a transition between the HMA overlay material and the expansion joint itself.

WSDOT allows either polyester concrete or elastomeric concrete for expansion joint headers. These two materials, which provide enhanced durability to impact in regard to other concrete mixes, shall be specified as alternates in the contract documents. General Special Provisions specify the material and construction requirements for polyester and elastomeric concrete.

Modified concrete overlay (MCO) material can provide rigid side support for an elastomeric compression seal or a rapid cure silicone sealant bead without the need for separately constructed elastomeric concrete or polyester concrete headers. This alternative approach requires the approval of the Bearing and Expansion.

Joint Specialist. Such modified concrete overlay headers may utilize welded wire fabric as reinforcement. Contract 7108 which includes Bridges No. 90/565N&S and 90/566N&S is an example.

9.1.4 Medium Movement Range Joints

Steel sliding plates, strip seals, and bolt-down panel joints have all been used in the past for accommodating medium movement ranges. The current policy is to use strip seal joints almost exclusively.

A. Steel Sliding Plate Joints

Two overlapping steel plates, one attached to the superstructure on each side of the joint, can be used to provide a smooth riding surface across an expansion joint. Unfortunately, steel sliding plates do not generally provide an effective barrier against intrusion of water and deicing chemicals into the joint and onto substructure elements. Consequently, these joints have been supplanted by newer systems, such as strip seals, with improved resistance to water penetration.

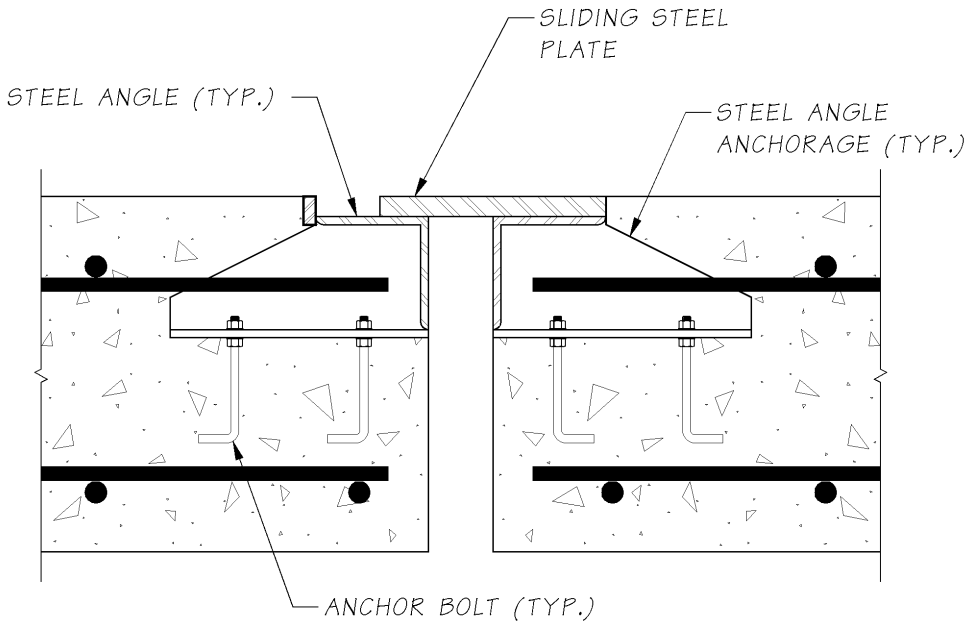

Steel Sliding Plate Joint
Figure 9.1.4-1

Before the advent of more modern systems, steel sliding plates were specified extensively. Their limited use today includes the following specific applications:

1. High pedestrian use sidewalks
2. Modular expansion joint upturns at traffic barriers
3. Roadway applications involving unusual movements (translation and large rotations) not readily accommodated by modular expansion joints.

In these applications, the sliding plates are generally galvanized or painted to provide corrosion resistance.

Repeated impact and corrosion have deteriorated many existing roadway sliding steel plate systems. In many instances, the anchorages connecting the sliding plate to the concrete deck have broken. When the integrity of the anchorages has been compromised, the steel sliding plates must generally be removed in their entirety and replaced with a new, watertight system. Where the integrity of the anchorages has not been compromised, sliding plates can often be retrofitted with poured sealants or elastomeric strip seals.

B. Strip Seal Joints

An elastomeric strip seal system consists of a preformed elastomeric gland mechanically locked into metallic edge rails generally embedded into the concrete deck on each side of an expansion joint gap. Unfolding of the elastomeric gland accommodates movement. Steel studs are generally welded to the steel extrusions constituting the edge rails to facilitate anchorage to the concrete deck. Damaged or worn glands can be replaced with minimal traffic disruption.

The metal edge rails effectively armor the edges of the expansion joint, obviating the need for a special impact resistant concrete, usually required at compression seal and poured sealant joints. The designer must select either the standard or special anchorage. The special anchorage incorporates steel reinforcement bar loops welded to intermittent steel plates, which in turn are welded to the extrusion. The special anchorage is generally used for very high traffic volumes or in applications subject to snowplow hits. In applications subject to snowplow hits and concomitant damage, the intermittent steel plates can be detailed to protrude slightly above the roadway surface in order to launch the snowplow blade and prevent it from catching on the forward extrusion.

The special anchorage requires a 9 inches deep blockout, as opposed to 7 inches deep for the standard anchorage. The standard anchorage is acceptable for high traffic volume expansion joint replacement projects where blockout depth limitations exist.

Metal edge rails may be field spliced using weld procedures provided by the strip seal expansion joint manufacturer. However, elastomeric strip seal elements shall not be field spliced. Each elastomeric strip seal element shall be furnished and installed as a single, continuous piece across the full width of the bridge deck.

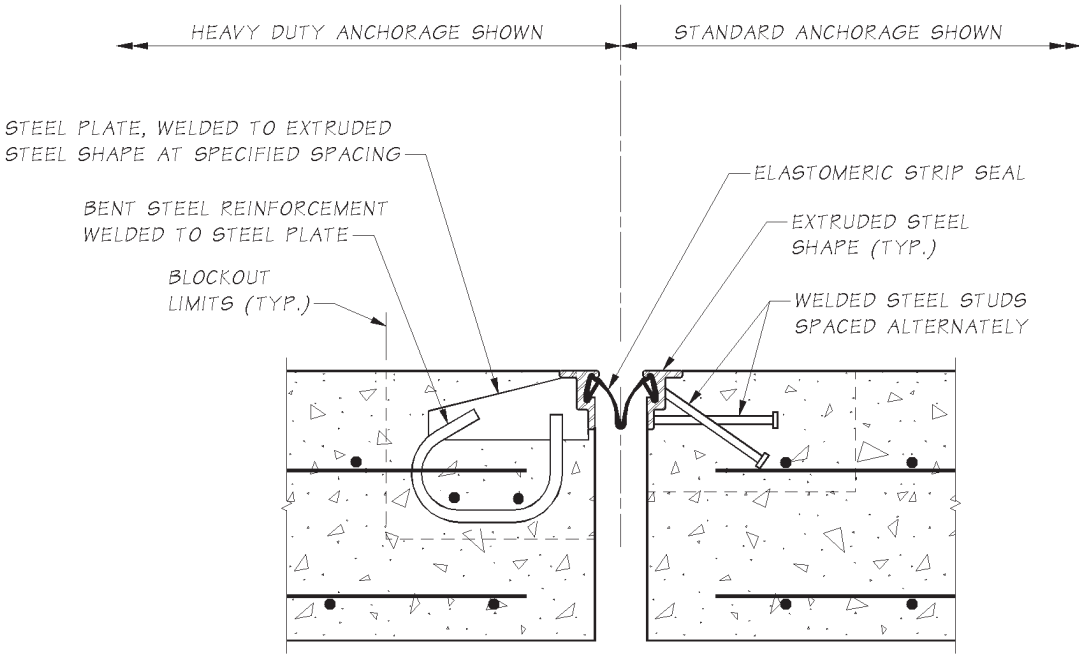

Strip Seal Joint
Figure 9.1.4-2

Design Example:

Given: A steel plate girder bridge has a total length of 600 feet. It is symmetrical and has a strip seal expansion joint at each end. These expansion joints are skewed 10°. Interior piers provide negligible restraint against longitudinal translation. Bridge superstructure average temperatures are expected to range between –30°F and 120°F during the life of the bridge. Assume a normal installation temperature of 64°F.

Find: Required Type A and Type B strip seal sizes and construction gap widths at 40°F, 64°F, and 80°F. Type A strip seals have a ½ inch gap at full closure. Type B strip seals are able to fully close, leaving no gap.

Solution:

Step 1: Calculate temperature and shrinkage movement.

Temperature: $\otimes_{temp} = ½(.0000065)(150°F)(600')(12''/') = 3.51''$

Shrinkage: $\Delta_{shrink} = 0.0$ (no shrinkage; $\mu = 0.0$ for steel bridge)

Total deck movement at each joint: = 3.51″

$$\otimes_{temp\text{-}normal\text{-}closing} = (120°F - 64°F)/(120°F + 30°F)(3.51'')(\cos 10°)$$
$$= 1.29''$$
$$\otimes_{temp\text{-}normal\text{-}opening} = (64°F + 30°F)/(120°F + 30°F)(3.51'')(\cos 10°)$$
$$= 2.17''$$

Step 2: Determine strip seal size required. Assume a minimum construction gap width of 1½″ at 64°F.

Type A: Construction gap width of 1½″ at 64°F will not accommodate 1.29″ closing with a ½″ gap at full closure. Therefore, minimum construction gap width at 64°F must be 1.29″ + 0.50″ = 1.79″

Size required = 1.79″ + 2.17″ = 3.96″ →Use 4″ strip seal

Type B: Construction width of 1½″ at 64°F is adequate.

Size required = 1.50″ + 2.17″ = 3.67″ →Use 4″ strip seal

Step 3: Evaluate construction gap widths for various temperatures for a 4″ strip seal.

Type A: Required construction gap width at 64°F = 0.50″ + 1.29″ = 1.79″

Construction gap width at
40°F = 1.79″ + (64°F–40°F)/(64°F + 30°F)·(2.17″) = 2.34″

Construction gap width at
80°F = 1.79″ - (80°F - 64°F)/(120°F - 64°F)·(1.29″)=1.42″

Type B: Construction gap width of 1½″ at 64°F is adequate.

Construction gap width at
40°F = 1.50″ + (64°F - 40°F)/(64°F + 30°F)·(2.17″) = 2.05″

Construction gap width at
80°F = 1.50″ - (80°F - 64°F)/(120°F - 64°F)·(1.29″) = 1.13″

Conclusion: Use a 4 inch strip seal. Construction gap widths for installation at superstructure average temperatures of 40°F, 64°F, and 80°F are 2⁵⁄₁₆″, 1¹³⁄₁₆″, and 1⁷⁄₁₆″ for Type A and 2¹⁄₁₆″, 1½″, and 1⅛″ for Type B. (Note that slightly larger gap settings could be specified for the 4″ Type B strip seal in order to permit the elastomeric glands to be replaced at lower temperatures at the expense of ride smoothness across the joint.)

C. Bolt-down Panel Joints

Bolt-down panel joints, sometimes referred to as expansion dams, are preformed elastomeric panels internally reinforced with steel plates. Bridging across expansion gaps, these panels are bolted into formed blockouts in the concrete deck with either adhesive or expansive anchors. Expansion is accompanied by stress and strain across the width of the bolt-down panel between anchor bolts.

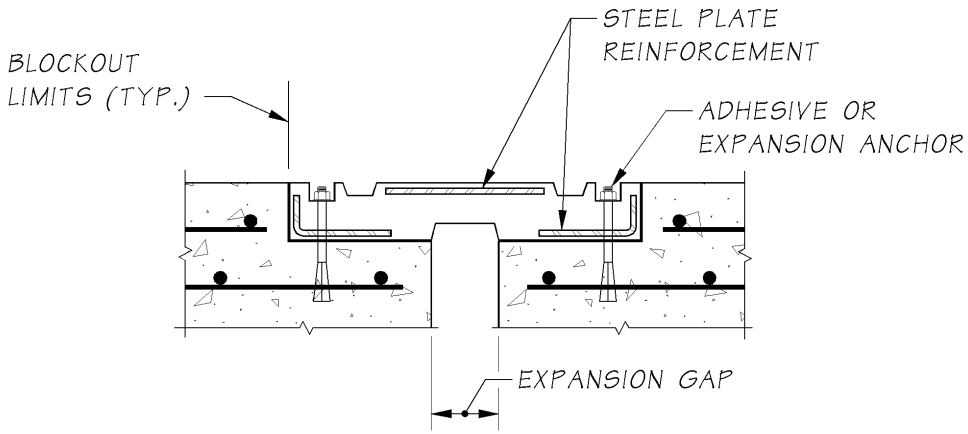

Bolt-down Panel Joint
Figure 9.1.4-3

Because of durability concerns, we no longer specify bolt-down panel joints. On bridge overlay and expansion joint rehabilitation projects, bolt-down panels are being replaced with rapid-cure silicone sealant joints or strip seal joints. For rehabilitation of bridges having low speed or low volume traffic, existing bolt-down panel joints may be retained and/or selective damaged panels replaced.

9.1.5 Large Movement Range Joints

Steel finger and modular joints have all been used in the past for accommodating large movement ranges.

A Steel Finger Joints

Finger joints have been successfully used to accommodate medium and large movement ranges. They are generally fabricated from steel plate and are installed in cantilevered configurations. The steel fingers must be designed to support traffic loads with sufficient stiffness to preclude excessive vibration. In addition to longitudinal movement, finger joints must also accommodate any rotations or differential vertical deflection across the joint. Finger joints may be fabricated with a slight downward taper toward the ends of the fingers in order to minimize potential for snowplow blade damage. Unfortunately, finger joints do not provide an effective seal against water infiltration. Elastomeric and metal troughs have been installed beneath steel finger joints to catch and redirect runoff water. However, in the absence of routine maintenance, these troughs clog and become ineffective.

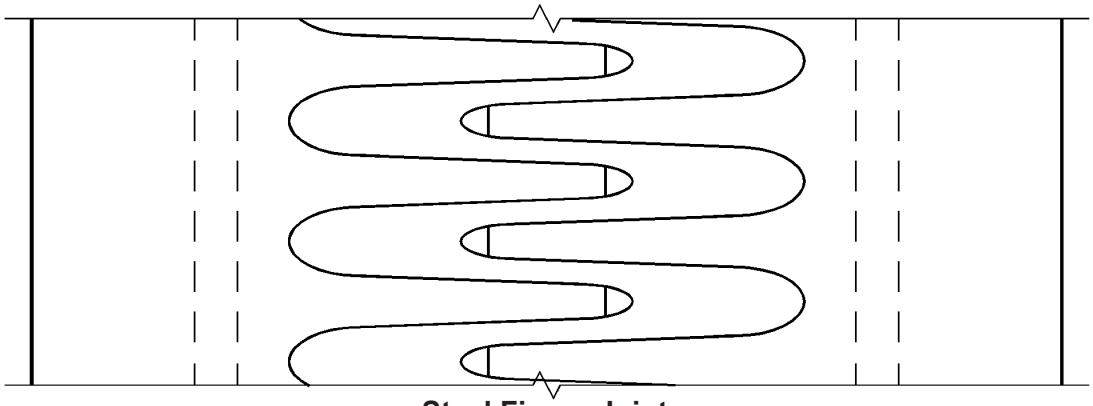

Steel Finger Joint
Figure 9.1.5-1

B. Modular Expansion Joints

Modular expansion joints are complex structural assemblies designed to provide watertight wheel load transfer across expansion joint openings. These systems were developed in Europe and introduced into the U.S. in the 1960s. To date, modular expansion joints have been designed and fabricated to accommodate movements of up to 85 inches. In Washington State, the largest modular expansion joints are those on the new Tacoma Narrows Bridge. These joints accommodate 48 inches of service movement and 60 inches of seismic movement. Modular expansion joints are generally shipped in a completely assembled configuration. Although center beam field splices are not preferable, smaller motion range modular expansion joints longer than 40 feet may be shipped in segments to accommodate construction staging and/or shipping constraints.

1. Operational Characteristics

Modular expansion joints comprise a series of steel center beams oriented parallel to the expansion joint axis. Elastomeric strip seals or box-type seals attach to adjacent center beams, preventing infiltration of water and debris. The center beams are supported on support bars, which span in the primary direction of anticipated movement. The support bars are supported on sliding bearings mounted within support boxes. Polytetrafluoroethylene (PTFE)–stainless steel interfaces between elastomeric support bearings and support bars facilitate the unimpeded translation of the support bars as the expansion gap opens and closes. The support boxes generally rest on either cast-in-place concrete or grout pads installed into a preformed blockout.

Modular expansion joints can be classified as either single support bar systems or multiple support bar systems. In multiple support bar systems, a separate support bar supports each center beam. In the more complex single support bar system, one support bar supports all center beams at each support location. This design concept requires that each center beam be free to translate along the longitudinal axis of the support bar as the expansion gap varies. This is accomplished by attaching steel yokes to the underside of the center beams. The yoke engages the support bar to facilitate load transfer. Precompressed elastomeric springs and PTFE – stainless steel interfaces between the underside of each center beam and the top of the support bar and between the bottom of

the support bar and bottom of the yoke support each center beam and allow it to translate along the longitudinal axis of the support bar. Practical center beam span lengths limit the use of multiple support bar systems for larger movement range modular expansion joints. Multiple support bar systems typically become impractical for more than nine seals or for movement ranges exceeding 27″. Hence, the single support bar concept typifies these larger movement range modular expansion joints.

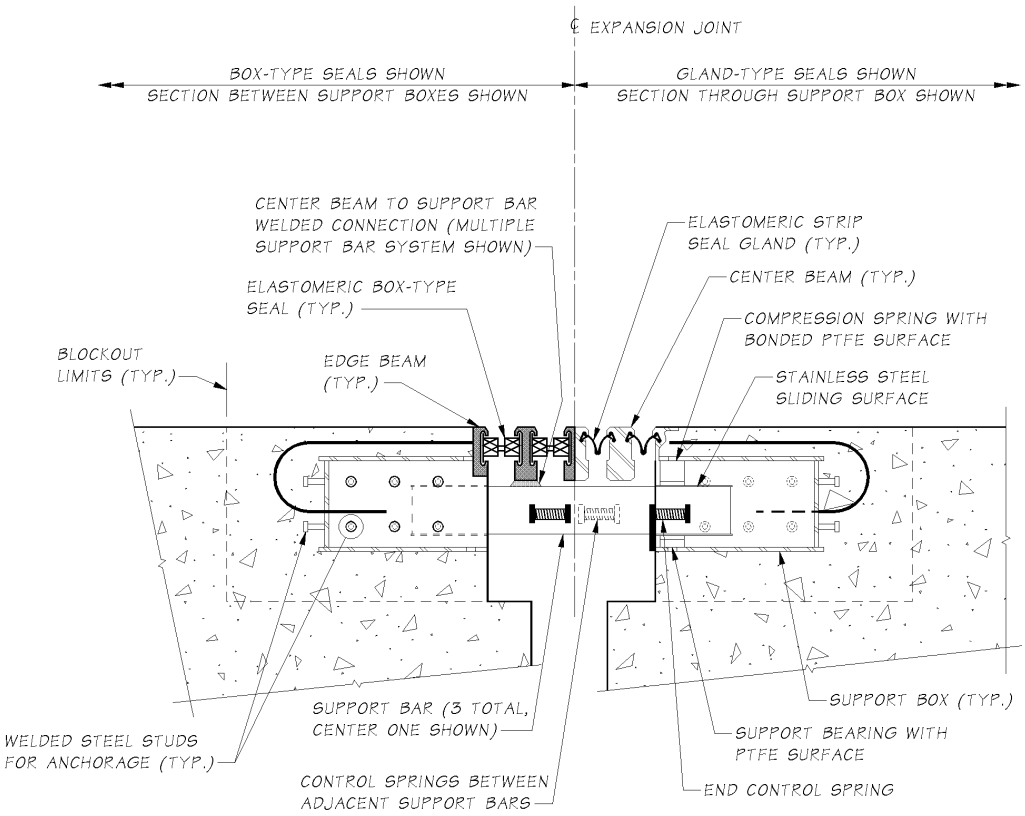

Modular Expansion Joint
Figure 9.1.5-2

The highly repetitive nature of axle loads predisposes modular expansion joint components and connections to fatigue susceptibility, particularly at center beam to support bar connections and center beam field splices. Bolted connections of center beams to support bar have demonstrated poor fatigue endurance. Welded connections are preferred, but must be carefully designed, fatigue tested, fabricated, and inspected to assure satisfactory fatigue resistance. WSDOT'S current General Special Provisions for modular expansion joints requires stringent fatigue-based design and test criteria for modular expansion joints. This special provision also specifies criteria for manufacturing, shipping, storing, and installing modular expansion joints.

Modular expansion joints may need to be shipped and/or installed in two or more pieces and subsequently spliced together in order to accommodate project staging and/or practical shipping constraints. Splicing generally occurs after concrete is cast into the blockouts. The center beams are the elements that must be connected. These field connections are either welded, bolted, or a hybrid combination of both.

Center beam field splices have historically been the weak link of modular expansion joints because of their high fatigue susceptibility and their tendency to initiate progressive zipper-type failure. The reduced level of quality control achievable with a field operation in regard to a shop operation contributes to this susceptibility. Specific recommendations regarding center beam field splices will be subsequently discussed as they relate to shop drawing review and construction.

2. Movement Design

Calculated total movement range establishes modular expansion joint size. WSDOT policy has been to provide a 15 percent factor of safety on these calculated service movements. Current systems permit approximately 3 inches of movement per elastomeric seal element; hence total movement rating provided will be a multiple of 3 in. To minimize impact and wear on bearing elements, the maximum gap between adjacent center beams should be limited to about 3½ inches.

To facilitate the installation of the modular joints at temperatures other than the 64°F normal temperature, the contract drawings shall specify expansion gap distance face-to-face of edge beams as a function of the superstructure temperature at the time of installation.

Modular expansion joint movement design relationships can be expressed as:

$$n = MR / mr$$
$$G_{min} = (n - 1) \cdot w + n \cdot g$$
$$G_{max} = G_{min} + M7R$$

Where MR = total movement range of the modular joint

mr = movement range per elastomeric seal
n = number of seals
$n - 1$ = number of center beams
w = width of each center beam
g = minimum gap per strip seal element at full closure
G_{min} = minimum distance face-to-face of edge beams
G_{max} = maximum distance face-to-face of edge beams

Design Example:

Given: Two cast-in-place post-tensioned concrete box girder bridge frames meet at an intermediate pier where they are free to translate longitudinally. Skew angle is 0° and the bridge superstructure average temperature ranges from 0°F to 120°F. A modular bridge expansion joint will be installed 60 days after post-tensioning operations have been completed. Specified creep is 150 percent of elastic shortening. Assume that 50 percent of total shrinkage has already occurred at installation time. The following longitudinal movements were calculated for each of the two frames:

	Frame A	Frame B
Shrinkage	1.18″	0.59″
Elastic shortening	1.42″	0.79″
Creep (1.5 × Elastic shortening)	2.13″	1.18″
Temperature fall (64°F to 0°F)	3.00″	1.50″
Temperature rise (64°F to 120°F)	2.60″	1.30″

Find: Modular expansion joint size required to accommodate the total calculated movements and the installation gaps measured face-to-face of edge beams at superstructure average temperatures of 40°F, 64°F, and 80°F.

Solution:

Step 1: Determine modular joint size.

Total opening movement (Frame A)
$= (0.5)\cdot(1.18″) + 2.13″ + 3.00″ = 5.72″$

Total opening movement (Frame B)
$= (0.5)\cdot(0.59″) + 1.18″ + 1.50″ = 2.98″$

Total opening movement (both frames) $= 5.72″ + 2.98″ = 8.70″$

Total closing movement (both frames) $= 2.60″ + 1.30″ = 3.90″$

Determine size of the modular joint, including a 15 percent allowance:

$1.15\cdot(8.70″ + 3.90″) = 14.49″ \rightarrow$ Use a 15 inch movement rating joint

Step 2: Evaluate installation gaps measured face-to-face of edge beams at superstructure average temperatures of 40°F, 64°F, and 80°F.

$MR = 15″$ (movement range)
$mr = 3″$ (maximum movement rating per strip seal element)
$n = 15″/3″ = 5$ strip seal elements
$n - 1 = 4$ center beams
$w = 2.50″$ (center beam top flange width)
$g = 0″$
$G_{min} = 4\cdot(2.50″) + 4\cdot(0″) = 10″$
$G_{max} = 10″ + 15″ = 25″$
$G_{64F} = G_{min}$ + Total closing movement from temperature rise
$= 10″ + 1.15\cdot(3.90″) = 14.48″ \rightarrow$Use 14½″
$G_{40F} = 14.5″ + [(64°F - 40°F)/(64°F - 0°F)]\cdot(3.00″ + 1.50″) = 16.19″$
$G_{80F} = 14.5″ - [(80°F - 64°F)/(120°F - 64°F)]\cdot(2.60″ + 1.30″) = 13.39″$

Check spacing between center beams at minimum temperature:

$G_{0F} = 14.50″ + 8.70″ = 23.20″$

Spacing = [23.20″ - 4(2.50″)]/5 = 2.64″ < 3½″ → OK

Check spacing between center beams at 64°F for seal replacement:

Spacing = [14.50″ - 4(2.50″)]/5 = 0.90″ < 1.50″ Therefore, the center beams must be mechanically separated in order to replace strip seal elements.

Conclusion: Use a 15 in. modular expansion joint. The gaps measured face-to-face of edge beams at installation temperatures of 40°F, 64°F, and 80°F are 16-3/16 in, 14½ in and 13⅜ in, respectively.

3. Review of Shop Drawings and Structural Design Calculations

The manufacturer's engineer generally performs structural design of modular expansion joints. The project special provision requires that the manufacturer submit structural calculations, detailed fabrication drawings, and applicable fatigue tests for approval by the Engineer. All structural elements must be designed and detailed for both strength and fatigue. Additionally, modular expansion joints should be detailed to provide access for inspection and periodic maintenance activities, including replacement of seals, control springs, and bearing components.

WSDOT's General Special Provision for modular expansion joints delineates explicit requirements for their design, fabrication, and installation. This comprehensive special provision builds upon WSDOT's past experience specifying modular expansion joints and incorporates the NCHRP Report 402 *Fatigue Design of Modular Bridge Expansion Joints*. The special provisions include requirements for the shop drawings, calculations, material certifications, general fabrication methods, corrosion protection, shipping and handling, storage, installation, fatigue testing, applicable welding codes and certifications, quality control, and quality assurance. It is strongly advised to carefully review this special provision before reviewing modular expansion joint shop drawings and calculations.

Any structural details, including connections, that do not clearly correspond to specific fatigue categories depicted in the LRFD shall be fatigue tested in accordance with the requirements stipulated in the special provision. Documentation of these tests shall accompany the shop drawing submittal.

As stated in the special provisions, the Contractor shall submit documentation of a quality assurance program distinctly separate from in-house quality control. Quality assurance shall be performed by an independent agency and shall be provided by the manufacturer.

Weld procedures shall be submitted for all shop and field welds. These procedures stipulate welding process employed, end preparation of the component welded, weld metal type, preheat temperature, and welder certifications. It is critical that all welds be made in strict accordance with specifications and under very careful inspection.

Field splices of center beams require particularly careful review. WSDOT's special provision recommends several mitigating measures to minimize fatigue susceptibility of center beam field splices. These measures include reducing support box spacing and optimizing fatigue stress range at field splice locations. Keep in mind that the confined nature of the space in which a welder must work can make these welds very difficult to complete. The American Welding Society (AWS) Welding Code prequalifies certain end geometries because experience has shown that high quality welds can be achieved.

Non-prequalified center beam end geometries require the Contractor to submit a Procedure Qualification Record documenting that satisfactory weld quality has been achieved using samples before welding of the actual field piece. The Contractor will generally want to avoid the additional expense associated with these tests and will thus specify a prequalified end geometry.

WSDOT's special provisions require that adequate concrete consolidation be achieved underneath all support boxes. The reviewer should ascertain that the shop drawings detail a vertical minimum of 2 in. between the bottom of each support box and the top of the concrete blockout. Alternatively, when vertical clearance is minimal, grout pads can be cast underneath support boxes before casting the concrete within the blockout.

4. Construction Considerations

Temperature adjustment devices are temporarily welded to the modular expansion joints to permit the Contractor to adjust the modular joint width so that it is consistent with the superstructure temperature at the time concrete is placed in the blockout. The temperature devices effectively immobilize the modular joint. Once the concrete begins to set up, it is critical to remove these devices as soon as possible. If the modular expansion joint is prevented from opening and closing, it will be subject to very large, potentially damaging, forces.

Prior to placement of concrete into the blockout, temporary supports generally bridge across the expansion gap, suspending the modular expansion joint from the bridge deck surface. Following concrete placement, the modular joint is supported by bearing of the support boxes on concrete that has consolidated underneath the blockout. The inspector should assure that adequate concrete consolidation is achieved underneath and around the support boxes.

Following delivery of the modular expansion joint to the jobsite and prior to its installation, the inspector should ascertain that center beam end geometries at field weld splice locations match those shown on the approved weld procedure.

9.2 Bearings

9.2.1 General Considerations

Bridge bearings facilitate the transfer of vehicular and other environmentally imposed loads from the superstructure down to the substructure, and ultimately, to the ground. In fulfilling this function, bearings must accommodate anticipated movements (thermal expansion/contraction) while also restraining undesired movements (seismic displacements). Because the movements allowed by an adjacent expansion joint must be compatible with the movement restriction imposed by a bearing, bearings and expansion joints must be designed interdependently and in conjunction with the anticipated behavior of the overall structure.

Numerous types of bearings are used for bridges. These include steel reinforced elastomeric bearings, fabric pad sliding bearings, steel pin bearings, rocker bearings, roller bearings, pot bearings, spherical bearings, disk bearings, and seismic isolation bearings. Each of these bearings possesses different characteristics in regard to vertical and horizontal load carrying capacity, vertical stiffness, horizontal stiffness, and rotational stiffness. A thorough understanding of these characteristics is essential for economical bearing selection and design. Spherical bearings, disk bearings, and pot bearings are sometimes collectively referred to as high load multi-rotational (HLMR) bearings.

Seismic isolation bearings mitigate the potential for seismic damage by utilizing two related phenomena: dynamic isolation and energy dissipation. Dynamic isolation allows a superstructure to essentially float, to some extent, while substructure elements below move with the ground during an earthquake. The ability of some bearing materials and elements to deform in certain predicable ways allows them to dissipate seismic energy that might otherwise damage critical structural elements.

Given their unique, in many instances proprietary, nature and the need to holistically incorporate their design with the overall seismic analysis and design of the structure, a separate.

9.2.2 Force Considerations

Bridge bearings must be explicitly designed to transfer all anticipated loads from the superstructure to the substructure. These forces may be directed vertically, longitudinally, or transversely with respect to the global orientation of the bridge. In accordance with LRFD provisions, most bearing design calculations are based upon service limit state stresses. Impact need not be applied to live load forces in the design of bearings.

Experience has empirically led to the following practical load capacity approximations for various bearing types:

Bearing Type	Approx. Load Capacity
Steel reinforced elastomeric (Method B)	Less than 800 kips
Fabric pad	Less than 600 kips
Steel pin	More than 600 kips
Spherical and disk	More than 800 kips
Seismic isolation	Less than 800 kips

9.2.3 Movement Considerations

Bridge bearings can be detailed to provide translational fixity, to permit free translation in any horizontal direction, or to permit guided translation. The movement restrictions thus imposed by a bearing must be compatible with the movements allowed by an adjacent expansion joint. Additionally, both bearings and expansion joints must be designed consistent with the anticipated load and deformation behavior of the overall structure. Design rotations shall be calculated as follows:

A. Elastomeric and Fabric Pad Bearings

The maximum service limit state rotation for bearings that do not have the potential to achieve hard contact between metal components shall be taken as the sum of unfactored dead and live load rotations plus an allowance for fabrication and construction uncertainties of 0.005 radians.

B. HLMR Bearings

Both service and strength limit state rotations are used in the design of HLMR bearings. These rotations must be shown on the plans to allow the manufacturer to properly design and detail a bearing.

The service limit state rotation shown on the plans shall include an allowance for uncertainties of +/-0.005 radians.

The strength limit state rotation is used to assure that contact between hard metal or concrete surfaces is prevented under the full range of expected loading. In accordance with the AASHTO LRFD, the strength limit state rotation shown on the plans shall include allowances of:

1. For disc bearings, +/-0.005 radians for uncertainties
2. For other HLMR bearings, such as spherical, pot, and steel pin bearings, +/-0.005 radians for fabrication and installation tolerances and an additional +/-0.005 radians for uncertainties

9.2.4 Detailing Considerations

HLMR bearings shall be designed, detailed, fabricated, and installed to facilitate inspection, maintenance, and eventual replacement. Jacking points shall be identified in the contract drawings so that bearings can be reset, repaired, or replaced. In some instances, bearings may need to be reset in order to mitigate unintended displacements induced by construction sequences.

Prestressed concrete girder bridges having end Type A (semi–integral) need not be detailed to accommodate elastomeric bearing replacement at abutments. Prestressed concrete girder bridges having end Type B (L-type abutments) shall be designed and detailed to accommodate elastomeric bearing replacement at abutments. Specifically, girder stops and end diaphragms shall be detailed to accommodate the placement of hydraulic jacks. The standard end diaphragms for long-span girders may not have sufficient flexural and shear capacity to support jacking induced stresses. The designer shall check these and provide sufficient steel reinforcement to accommodate shear forces and bending moments induced by jacking. (Girder end Types A and B are depicted on Figures 5.6.2-4 and 5.6.2-5.) Incidentally, intermediate piers of prestressed concrete girder bridges having steel reinforced elastomeric bearings shall also be designed and detailed to facilitate bearing replacement.

9.2.5 Bearing Types

A. Elastomeric Bearings

Elastomeric bearings are perhaps the simplest and most economical of all bridge bearings. They are broadly classified into four types: plain elastomeric pads, fiberglass reinforced elastomeric pads, steel reinforced elastomeric pads, and cotton duck reinforced elastomeric pads. Of these four types, the latter two are used extensively for bridge construction. Incidentally, cotton duck reinforced elastomeric pads are generally referred to as fabric pad bearings. This subsection will address steel reinforced elastomeric bearings. A subsequent section will address fabric pad bearings.

A steel reinforced elastomeric bearing consists of discrete steel shims vulcanized between adjacent discrete layers of elastomer. The vulcanization process occurs in an autoclave under conditions of high temperature and pressure. The constituent elastomer is either natural rubber or synthetic rubber (neoprene). Steel reinforced elastomeric bearings are commonly used with prestressed concrete girder bridges and may be used with other bridge types. Because of their relative simplicity and fabrication ease, steel reinforced elastomeric bearings offer significant economy relative to HLMR bearings.

Steel reinforced elastomeric bearings rely upon the inherent shear flexibility of the elastomer layers to accommodate bridge movements in any horizontal direction. This shear flexibility also enhances their rotational flexibility. The steel shims limit the tendency for the elastomer layers to bulge laterally under compressive load.

Steel reinforced elastomeric bearings can be designed by either the Method A or Method B procedure delineated in the LRFD provisions. Current WSDOT policy is to design all elastomeric bearings using the Method B provisions, which provides more relief in meeting rotational demands than Method A. The Method A design procedure is a carryover based upon more conservative interpretation of past theoretical analyses and empirical observations prior to research leading up to the publication of NCHRP Report 596 *Rotation Limits for Elastomeric Bearings*.

Both Method A and Method B design procedures require determination of the optimal geometric parameters to achieve an appropriate balance of compressive, shear, and rotational stiffnesses and capacities. Fatigue susceptibility is controlled by limiting live load compressive stress. Delamination (of steel shim-elastomer interface) susceptibility is controlled by limiting total compressive stress. Assuring adequate shim thickness precludes yield and rupture of the steel shims. Excessive shear deformation is controlled and rotational flexibility is assured by providing adequate total elastomer height. Generally, total elastomer thickness shall be no less than twice the maximum anticipated lateral deformation. Overall bearing stability is controlled by limiting total bearing height relative to its plan dimensions. The most important design parameter for reinforced elastomeric bearings is the shape factor. The shape factor is defined as the plan area of the bearing divided by the area of the perimeter free to bulge (perimeter multiplied by thickness of one layer of elastomer).

Axial, rotational, and shear loading generate shear strain in the constituent elastomeric layers of a typical bearing. Computationally, Method B imposes a limit on the sum of these shear strains. It distinguishes between static and cyclic components of shear strain by applying an amplification factor of 1.75 to cyclic components to reflect cumulative degradation caused by repetitive loading.

In essence, elastomeric bearing design reduces to checking several mathematical equations while varying bearing plan dimensions, number of elastomeric layers and their corresponding thicknesses, and steel shim thicknesses. Because these calculations can become rather tedious, MS Excel spreadsheets have been developed and are available for designs using both Method A and Method B procedures. See the Bearing and Expansion Joint Specialist for these design tools.

LRFD design may result in thicker steel reinforced elastomeric bearings than previous designs, particularly for shorter span bridges. This is a consequence of the increased rotational flexibility required to accommodate the 0.005 radian allowance for uncertainties and partially to inherent conservatism built into the rotational capacity equations.

Although constituent elastomer has historically been specified by durometer hardness, shear modulus is the most important physical property of the elastomer for purposes of bearing design. Research has concluded that shear modulus may vary significantly among compounds of the same hardness. Accordingly, shear modulus shall be specified on the plans as 165 psi at 73ºF without reference to durometer hardness.

Elastomeric bearings shall conform to the requirements of AASHTO Specification M 251 *Plain and Laminated Elastomeric Bridge Bearings*. Shims shall be fabricated from ASTM A 1011 Grade 36 steel unless noted otherwise on the plans. Bearings shall be laminated in ½ inch thick elastomeric layers with a minimum total thickness of 1 inch. For overall bearing heights less than 5 inches, a minimum of ¼ inch of side clearance shall be provided over the steel shims. For overall heights greater than 5 inches, a minimum of ½ inch of side clearance shall be provided. Live load compressive deflection shall be limited to 1/16 inch. AASHTO Specification M 251 requires elastomeric bearings to be subjected to a series of tests, including a compression test at 150 percent of the total service load. For this reason, compressive dead load and live load shall be specified on the plans.

With respect to width, elastomeric bearings shall be designed and detailed as follows:

1. For prestressed concrete wide flange girders (WF42G, WF50G, WF58G, WF74G, and W95G), the edge of the bearing pad shall be set between 1 inch minimum and 9 inch maximum inside of the edge of the girder bottom flange.
2. For prestressed concrete I-girders, bulb-tee girders, and deck bulb-tee girders, the edge of the bearing pad shall be set 1 in. in side of the edge of the girder bottom flange.

3. For all prestressed concrete tub girders, the edge of the bearing shall be set 1in. inside of the edge of the bottom slab. Bearing pads for prestressed concrete tub girders shall be centered close to the centerline of each web.
4. For all prestressed concrete slabs, one bearing pad and corresponding grout pad is required for each end of the prestressed concrete slab. The centerline of the bearing and grout pad shall coincide with the centerline of the prestressed concrete slab. The need for steel shims shall be assessed during the bearing design.

As mentioned earlier, LRFD Article 14.4.2.1 requires that a 0.005 radian allowance for uncertainties be included in the design of steel reinforced elastomeric bearings. This allowance applies to both rotations θx and θy. The LRFD Article 14.4.2 Commentary states "An owner may reduce the fabrication and setting tolerance allowances if justified by a suitable quality control plan; therefore, these tolerance limits are stated as recommendations rather than absolute limits." Consult with the Bearings and Expansion Joint Specialist in instances in which the 0.005 radian tolerance precludes convergence to a reasonable design solution.

In order to facilitate compressive load testing, future bearing replacement, and vertical geometry coordination, the following table shall be included in the Plans:

Bearing Design Table Service I Limit State	
Dead load reaction	--------- kips
Live load reaction (w/o impact)	--------- kips
Unloaded height	--------- inches
Loaded height (*DL*)	--------- inches
Shear modulus at 73º F	--------- psi

In the construction of precast prestressed concrete girder and steel girder bridges, elastomeric bearings are generally not offset to account for temperature during erection of the girders as are most other bearing systems. Girders may be set atop elastomeric bearings at temperatures other than the mean of the temperature range. This is statistically reconciled by assuming a maximum thermal movement in either direction of:

$$\Delta_{temp} = 0.75 \cdot \alpha \cdot L \cdot (T_{MaxDesign} - T_{MinDesign})$$

where $T_{MaxDesign}$ is the maximum anticipated bridge deck average temperature and $T_{MinDesign}$ is the minimum anticipated bridge deck average temperature during the life of the bridge.

For precast prestressed concrete girder bridges, the maximum thermal movement, Δ_{temp}, shall be added to shrinkage and long-term creep movements to determine total bearing height required. The shrinkage movement for this bridge type shall be half that calculated for a cast-in-place concrete bridge.

For cast-in-place concrete bridges, it is assumed that the temperature of concrete at placement is equal to the normal temperature, as defined by the *Standard Specifications*. Total shrinkage movement is added to the maximum thermal movement, Δ_{temp}, to determine required total height of the elastomeric bearing, as noted in Section 9.1.2-A.

B. Fabric Pad Sliding Bearings

Fabric pad sliding bearings incorporate fabric pads with a polytetrafluoroethylene (PTFE)–stainless steel sliding interface to permit large translational movements. Unlike a steel reinforced elastomeric bearing having substantial shear flexibility, the fabric pad alone cannot accommodate translational movements. Fabric pads can accommodate very small amounts of rotational movement; less than can be accommodated by more flexible steel reinforced elastomeric bearings. Practical size considerations limit the use of fabric pad bearings to total service load reactions under about 600 kips.

PTFE, also referred to as Teflon, is available in several forms: unfilled sheet, dimpled lubricated, filled, and woven. Filled PTFE contains glass, carbon, or other chemically inert fibers that enhance its resistance to creep (cold flow) and wear. Interweaving high strength fibers through PTFE material creates woven PTFE. Dimpled PTFE contains dimples, which act as reservoirs for silicone grease lubricant.

Friction coefficients for PTFE – stainless steel surfaces vary significantly as a function of PTFE type, contact pressure, and ambient temperature. The AASHTO LRFD provides friction coefficients as a function of these variables. Dimpled lubricated PTFE at high temperatures and high contact pressures typically yield the lowest friction coefficients. Filled PTFE at low temperatures and low contact pressures yield the highest friction coefficients.

In order to minimize frictional resistance, a Number 8 (Mirror) finish should be specified for all flat stainless steel surfaces in contact with PTFE. The low-friction characteristics of a PTFE – stainless steel interface are actually facilitated by fragmentary PTFE sliding against PTFE after the fragmentary PTFE particles are absorbed into the asperities of the stainless steel surface.

In fabric pad sliding bearings, the PTFE is generally recessed half its depth into a steel backing plate, which is generally bonded to the top of a fabric pad. The recess provides confinement that minimizes creep (cold flow). The stainless steel sheet is typically seal welded to a steel sole plate attached to the superstructure.

Silicone grease is not recommended for non-dimpled PTFE. Any grease will squeeze out under high pressure and attract potentially detrimental dust and other debris.

1. Fabric Pad Design

WSDOT's design criteria for fabric pad bearings are based upon manufacturers' recommendations, supported by years of satisfactory performance. These criteria differ from AASHTO LRFD provisions in that they recognize significantly more rotational flexibility in the fabric pad. Our maximum allowable service load average bearing pressure for fabric pad bearing design is 1,200 psi. WSDOT's maximum allowable service load edge bearing pressure for fabric pad bearing design is 2,000 psi. A 1,200 psi compressive stress corresponds to 10 percent strain in the fabric pad while a 2,000 psi compressive stress corresponds to 14 percent compressive strain. Based upon this information, the following design relationship can be established:

$$\theta = \frac{2 \times (.14 - .10) \times T}{L}$$

$$\theta = \frac{.08 \times T}{L}$$

$$T = 12.5 \times \theta \times L$$

Where Θ = rotation due to loading plus construction tolerances

L = pad length (parallel to longitudinal axis of beam)

T = fabric pad thickness required

Design Example:

Given: $DL + LL = 240$ kips

Rotation = 0.015 radians

Allowable bearing pad pressure = 1200 psi

$f'_c = 3000$ psi

Find: fabric pad plan area and thickness required

Conclusion:

Pad area required = 240,000/1200 = 200 in^2

Try a 20″ wide × 10″ long fabric pad

$T = 12.5(.015)(10'') = 1.88''$

Solution: Use a 20″ × 10″ × 1⅞″ fabric pad.

2. PTFE

Stainless Steel Sliding Surface Design – PTFE shall be ⅛ in. thick and recessed 1/16 in. into a ½ in. thick steel plate that is bonded to the top of the fabric pad. With the PTFE confined in this recess, the LRFD code permits an average contact stress of 4,500 psi for all loads calculated at the service limit state and an average contact stress of 3,000 psi for permanent loads calculated at the service limit state. The LRFD code permits slightly higher edge contact stresses.

For example, suppose:

$DL = 150$ kips

$LL = 90$ kips

$A_{PTFE} > (150 \text{ kips} + 90 \text{ kips})/4.5 \text{ ksi} = 53.3 \text{ in}^2$

$A_{PTFE} > 150 \text{ kips}/3 \text{ ksi} = 50.0 \text{ in}^2$

Selected area of PTFE must exceed 53.3 in^2

Stainless steel sheet shall be finished to a No. 8 (Mirror) finish and seal welded to the sole plate.

C. Pin Bearings

Steel pin bearings are generally used to support heavy reactions with moderate to high levels of rotation about a single predetermined axis. This situation generally occurs with long straight steel plate girder superstructures.

D. Rocker and Roller Type Bearings

Steel rocker bearings have been used extensively in the past to allow both rotation and longitudinal movement while supporting large loads. Because of their seismic vulnerability and the more extensive use of steel reinforced elastomeric bearings, rocker bearings are no longer specified for new bridges.

Steel roller bearings have also been used extensively in the past. Roller bearings permit both rotation and longitudinal movement. Pintles are generally used to connect the roller bearing to the superstructure above and to the bearing plate below. Nested roller bearings have also been used in the past. Having been supplanted by more economical steel reinforced elastomeric bearings, roller bearings are infrequently used for new bridges today.

E. Spherical Bearings

A spherical bearing relies upon the low-friction characteristics of a curved PTFE–stainless steel interface to provide a high level of rotational flexibility in multiple directions. An additional flat PTFE–stainless steel surface can be incorporated into the bearing to additionally provide either guided or non-guided translational movement capability.

Woven PTFE is generally used on the curved surfaces of spherical bearings. Woven PTFE exhibits enhanced creep (cold flow) resistance and durability characteristics relative to unwoven PTFE. When spherical bearings are detailed to accommodate translational movement, woven PTFE is generally specified on the flat sliding surface also. The LRFD code permits an average contact stress of 4,500 psi for all loads calculated at the service limit state and an average contact stress of 3,000 psi for permanent loads calculated at the service limit state. The LRFD code permits slightly higher edge contact stresses.

Both stainless steel sheet and solid stainless steel have been used for the convex sliding surface of spherical bearings. According to one manufacturer, curved sheet is generally acceptable for contact surface radii greater than 14 in to 18. in For smaller radii, a solid stainless steel convex plate or a stainless steel inlay is used. The inlay is welded to the solid conventional steel. If the total height of the convex plate exceeds about 5 in, a stainless steel inlay will likely be more economical.

Most spherical bearings are fabricated with the concave surface oriented downward to minimize dirt infiltration between PTFE and the stainless steel surface. Structural analysis of the overall structure must recognize the center of rotation of the bearing not being coincident with the neutral axis of the girder above.

The contract drawings must show the diameter and height of the spherical bearing in addition to all dead, live, and seismic loadings. Total height depends upon the radius of the curved surface, diameter of the bearing, and total rotational capacity required. Consult the Bearing and Expansion Joint Specialist for design calculation examples. Additionally, sole plate connections, base plate, anchor bolts, and any appurtenances for horizontal force transfer must be detailed on the plans. The spherical bearing manufacturer is required to submit shop drawings and detailed structural design calculations of spherical bearing components for review by the Engineer.

F. Disk Bearings

A disk bearing is composed of an annular shaped polyether urethane disk designed to provide moderate levels of rotational flexibility. A steel shear-resisting pin in the center provides resistance against lateral force. A flat PTFE–stainless steel surface can be incorporated into the bearing to also provide translational movement capability, either guided or non-guided.

G. Seismic Isolation Bearings

Numerous seismic isolation bearings exist, each relying upon varying combinations of dynamic isolation and energy dissipation. These devices include lead core elastomeric bearings, high damping rubber, friction pendulum, hydraulic dampers, and various hybrid variations.

Effective seismic isolation bearing design requires a thorough understanding of the dynamic characteristics of the overall structure as well as the candidate isolation devices. Isolation devices are differentiated by maximum compressive load capacity, lateral stiffness, lateral displacement range, maximum lateral load capacity, energy dissipation per cycle, functionality in extreme environments, resistance to aging, fatigue and wear properties, and effects of size.

The Highway Innovative Technology Evaluation Center (HITEC) has developed guidelines for testing seismic isolation and energy dissipating devices. With the goal of disseminating objective information to design professionals, HITEC has tested and published technical reports on numerous proprietary devices. These tests include performance benchmarks, compressive load dependent characterization, frequency dependent characterization, fatigue and wear, environmental aging, dynamic performance at extreme temperatures, durability, and ultimate performance.

9.2.6 Miscellaneous Details

A. Temporary Support before Grouting Masonry Plate

The masonry plate of a HLMR bearing is generally supported on a grout pad that is installed after the bearing and superstructure girders above have been erected. This procedure allows the Contractor to level and slightly adjust the horizontal location of the bearing before immobilizing it by placing the grout pad. Several methods have been developed to temporarily support the masonry plate until the grout is placed. The two most commonly used methods will be discussed here.

1. Shim Packs

Multiple stacks of steel shim plates can be placed atop the concrete surface to temporarily support the weight of the girders on their bearings before grouting. Engineering judgment must be used in selecting the number and plan size of the shims taking grout flowability and shim height adjustability into consideration.

2. Two-step Grouting with Cast Sleeves

A two-step grouting procedure with cast-in-place voided cores can be used for smaller HLMRs not generally subjected to uplift. Steel studs are welded to the underside of the masonry plate to coincide with the voided cores. With temporary shims installed between the top of the concrete surface and the underside of the masonry plate, the voided cores are fully grouted. Once the first stage grout has attained strength, the shims are removed, the masonry plate is dammed, and grout is placed between the top of the concrete surface and the underside of the masonry plate.

B. Anchor Bolts

Anchor bolts shall be designed to resist all horizontal shear forces and direct tension force due to uplift.

Anchor bolts shall be ASTM A 449 where strengths equal to ASTM A 325 are required and ASTM A 354, Grade BD, where strengths equal to ASTM A 490 are required. ASTM F 1554 bolts with supplemental Charpy test requirements shall be specified in applications in which the bolts are subject to seismic loading.

9.2.7 Contract Drawing Representation

High load multi-rotational bearings are generally depicted schematically in the contract drawings. Each bearing manufacturer has unique fabricating methods and procedures that allow it to fabricate a bearing most economically. Depicting the bearings schematically with loads and geometric requirements provides each manufacturer the flexibility to innovatively achieve optimal economy.

9.2.8 Shop Drawing Review

The manufacturer designs and develops shop drawings for high load multi-rotational bearings. The Engineer is responsible for checking and approving the calculations and shop drawings. The calculations shall verify the structural adequacy of all components of the bearing. Each bearing shall be detailed to permit the inspection and replacement of components.

9.2.9 Bearing Replacement Considerations

In some situations, existing bearings, or elements thereof, must be replaced consequent to excessive wear or seismic rehabilitation. Bearing replacement operations generally require lifting of superstructure elements using hydraulic jacks. The designer is responsible for calculating anticipated lifting loads and stipulating these loads on the contract drawings. Limitations on lift height shall also be specified. Consideration shall be given to lift height as it relates to adjacent expansion joints elements and adjoining sections of railing. Stresses induced as a consequence of differential lift height between multiple hydraulic jacks are generally addressed by stipulating restrictions in the plans or special provisions.

Past experience shows that actual lifting loads nearly always exceed calculated lifting loads. Many factors may contribute to this phenomenon, including friction in the hydraulic jack system and underestimation of superstructure dead loads. Unless the Bearing and Expansion Joint Specialist or the Bridge Design Engineer approves a variance, contract documents shall require that all hydraulic jacks be sized for 200 percent of the calculated lifting load. In all cases, the designer shall verify from manufacturer's literature that appropriate hydraulic jacks are available to operate within the space limitations imposed by a particular design situation.

9.3 Seismic Isolation Bearings

9.3.1 General Considerations

The decision to use seismic isolation bearings should be made during the early stages of project development based upon complexity of the geotechnical issues and bridge structural design. A cost-benefit analysis comparing Type 1 (ductile substructure) design vs. Type 3 (seismic isolation) design shall be performed and submitted for approval to the Bridge Design Engineer. The designer shall perform two separate designs, one with and one without seismic isolation bearings. The cost-benefit analysis shall, as minimum, address the following:

- Longer initial design time and increased analysis complexity
- Impact of preliminary and final design time on the project delivery schedule
- Time required for feasibility assessment of seismic isolation and consultation with prospective isolation bearing suppliers
- Life cycle cost associated with additional specialized bearing inspections
- Life cycle cost associated with potential bearing and expansion joint replacements
- Long-term performance and maintenance issues
- Necessity for larger movement range expansion joints to accommodate isolation effects

Seismic isolation bearings shall not be used between top of column and bottom of crossbeam in either single or multiple column bents.

Following approval, by the Bridge Design Engineer, to use seismic isolation bearings, the designer shall send a set of preliminary plans and mitigation requirements to at least three seismic isolation bearing suppliers for evaluation to determine if they can meet the design and specification requirements. Inspection and maintenance requirements shall be solicited from the suppliers to ascertain that their bearings will function satisfactorily throughout the design life of the bridge, including after any seismic events. Comments from suppliers shall be considered and appropriately assimilated before commencing final structural design. Sole source procurement may be considered and pursued upon approval by the Bridge Design Office and the Project Engineer.

Seismic isolation bearings may not provide significant benefit for concrete bridges under 700 foot length, steel bridges under 800 foot length, bridges having skew in excess of 30 degrees, or bridges with geometrical complexities, variable superstructure width, or drop-in spans. As such, seismic isolation bearings are not recommended for bridges having these characteristics.

The suitability of seismic isolation bearings for a specific project should be carefully evaluated prior to approval. Seismic isolation bearings may not be an effective solution for some combinations of bridge types and site conditions. For example, increasing the fundamental period of a structure founded on soft soils may not reduce the force demand. Design shall include near fault effects and soil-structure interaction associated with soft soil sites.

Expansion joints must accommodate seismic movements in order for seismic isolation bearings to function properly. The effect of this increased movement upon expansion joint demands shall be carefully considered. Modular expansion joints are generally designed to accommodate longitudinal service movement only. Design of modular expansion joints to accommodate longitudinal service movement is generally based upon limiting the movement capacity per elastomeric seal to 3 inches maximum in order to limit the fraction of wheel load imposed upon any one centerbeam and to assure that elastomeric seals will not detach under service load conditions. Because the fatigue limit state almost always controls centerbeam and support bar design, a larger movement capacity per cell is acceptable to accommodate seismic movement provided that 1) support bars and boxes are detailed to accommodate the increased movement and 2) elastomeric seal detachment is acceptable. Standard modular expansion joints are not designed to accommodate transverse bridge movements. Seismic modular expansion joints must be used if transverse movement must also be accommodated.

9.3.2 General Design Criteria

Seismic isolation bearings shall be designed in accordance with the requirements of the AASHTO *Guide Specifications for Seismic Isolation Design*. The response modification factors (R-factors) contained in Article 6 shall not be used if the provisions of the AASHTO SEISMIC are being followed for the design of the bridge.

9.3.3 Seismic Isolation Bearing Submittal Requirements

The selected manufacturer shall develop and submit seismic isolation bearing design calculations and shop drawings to WSDOT for review and approval. Design calculations and shop drawings shall be based upon the loads, movement demands, schematic details, and engineering requirements contained in the contract drawings and Special Provisions. All suppliers are required to provide calculations and shop drawings regardless of the contracting method or whether sole source procurement has been approved. The use of seismic isolation bearings for WSDOT projects shall fully comply with the requirements herein. A manufacturer's design report will not be accepted in lieu of complying with the following five requirements:

A. Shop Drawings

Fully engineered shop drawings shall be submitted to document compliance with contractual material and design requirements and to provide a baseline reference for future engineering evaluation during the design life of the bridge. Shop drawings shall clearly show all individual components, constituent materials, connections, dimensions, surface finishes, coatings, and tolerances necessary to fabricate components and fully assemble the bearing. Shop drawings do not need to identify proprietary aspects of individual components or fabrication procedures (for example, low-friction sliding material and its attachment to steel components).

B. Bearing Materials and Fabrication

Stainless steel shall be incorporated as specified on all sliding or articulating surfaces. Bearings with seals shall be watertight systems. Mill certification documentation shall be submitted for all constituent components. Quality Assurance (QA) inspection affords WSDOT the opportunity to verify and document materials, witness modular fabrication and coating processes, and verify "Buy America" material requirements. Modular methods of bearing manufacturing shall accommodate the full WSDOT QA process.

C. Paint

All non-stainless steel surfaces shall have a full four-coat (primer, intermediate, intermediate stripe, and top coat) paint system applied in accordance with *Standard Specifications* and Special Provisions. The full four-coat paint system shall be applied to all non-stainless steel and non-plastic internal and external surfaces.

D. Bearing Specifications

WSDOT bearing specifications constitute part of the contract. Disregard of or noncompliance with the bearing specification requirements in the Special Provisions constitutes a violation of the contract.

E. Fabrication

Third-party inspection shall be provided by the manufacturer. The manufacturer shall provide access for Contracting Agency QA inspection as stipulated in *Standard Specifications* Section 1.5.6 and the bearing Special Provisions. QA inspection shall include all aspects of the bearing fabrication and assembly. The manufacturer shall adhere to all hold points, as specified in the *Standard Specifications* and Special Provisions.

9.3.4 Seismic Isolation Bearing Review Process

The manufacturer shall submit design calculations and shop drawings to the Engineer for review and approval prior to commencement of fabrication operations. The Engineer shall review the contract drawings and Special Provisions to assure familiarity with the design, fabrication, and inspection requirements.

A. Design Calculations

The Engineer shall review the design calculations to assure that

- All design calculations are stamped and signed.
- The design incorporates all load cases specified in the contract documents.
- The design incorporates all displacements and rotations specified in the contract documents.
- All allowable stresses used in the design are consistent with LRFD provisions and that these allowable stresses are not exceeded.

B. Shop Drawings

The Engineer shall review the shop drawings to assure that

- All shop drawings are stamped and signed.
- Shop drawings include plan and elevation view of the assembled bearings and details of each constituent component. Such details shall include all dimensions and tolerances necessary to complete manufacturing.
- All component materials shall be specified on the shop drawings and shall conform with the requirements of the Special Provisions.
- All component flatness tolerances and surface roughness requirements are depicted on the shop drawings and are consistent with the Special Provisions.
- All corrosion protection system details (galvanization, paint) for steel components, bolts, and washers are designated on the shop drawings and are in conformance with the Special Provisions and the *Standard Specifications*.
- Bearings have been designed and detailed to accommodate full inspection and removal and replacement of all components subject to wear or other anticipated damage.
- Adequate clearances, including applicable tolerances, have been provided between components in order to accommodate assembly and service movements.
- Positive connections are provided between all components to assure individual components will not separate under unanticipated seismic movements. All connections have been designed to accommodate loads shown on the contract drawings.
- Shop drawings stipulate handling and storage requirements for both shipment and jobsite storage.
- Masonry and sole plate connections are integrated into the bearing design.
- Specific directives are provided for setting the bearings as a function of the bridge temperature. These directives shall include a rational method for assessing the temperature of the superstructure.
- Grouting procedure and temporary shim requirements underneath the masonry plate are clearly depicted on the shop drawings.
- Shop drawings stipulate that all bearings shall be marked for location and orientation as required by the Special Provisions

9.3.5 Seismic Isolation Bearing Inspection

A. Fabrication Inspection

The manufacturer shall provide access for third-party QA inspectors to observe the fabrication and testing of the seismic isolation bearings in accordance with WSDOT *Standard Specifications* Section 1-05.6.

B. Field Inspection

Following arrival at the jobsite, prior, during, and after installation, WSDOT inspectors shall perform the following inspections

- Inspect all external surfaces for paint distress or presence of corrosion.
- Inspect perimeter seals for damage that could compromise watertightness.
- Inspect grout, concrete, and other structural elements connected to the bearings for damage.
- Verify that adequate lateral and vertical clearances exist around the bearing to assure that lateral and vertical displacement capacities can be achieved. Confirm that no structural components obstruct the bearing from achieving these movement capacities. Evaluate any non-structural obstructions that could impede attainment of movement capacities.
- Inspect the perimeter of the isolated structure to ascertain that it is free to move as needed to attain the horizontal and vertical displacement capacities of the bearings.

9.4 Bridge Standard Drawings

Expansion Joints

9.1-A1-1	Compression Seal
9.1-A2-1	Strip Seal
9.1-A3-1	Silicone Seal

Chapter 10 Signs, Barriers, Approach Slabs, and Utilities — Contents

10.1 Sign and Luminaire Supports . . . 10-1
- 10.1.1 Loads . . . 10-1
- 10.1.2 Bridge Mounted Signs . . . 10-3
- 10.1.3 Monotube Sign Structures Mounted on Bridges . . . 10-7
- 10.1.4 Monotube Sign Structures . . . 10-8
- 10.1.5 Foundations . . . 10-12
- 10.1.6 Truss Sign Bridges: Foundation Sheet Design Guidelines . . . 10-15

10.2 Bridge Traffic Barriers . . . 10-16
- 10.2.1 General Guidelines . . . 10-16
- 10.2.2 Bridge Railing Test Levels . . . 10-17
- 10.2.3 Available WSDOT Designs . . . 10-17
- 10.2.4 Design Criteria . . . 10-21

10.3 At Grade Concrete Barriers . . . 10-26
- 10.3.1 Differential Grade Concrete Barriers . . . 10-26
- 10.3.2 Traffic Barrier Moment Slab . . . 10-27
- 10.3.3 Precast Concrete Barrier . . . 10-31

10.4 Bridge Traffic Barrier Rehabilitation . . . 10-32
- 10.4.1 Policy . . . 10-32
- 10.4.2 Guidelines . . . 10-32
- 10.4.3 Design Criteria . . . 10-32
- 10.4.4 WSDOT Bridge Inventory of Bridge Rails . . . 10-33
- 10.4.5 Available Retrofit Designs . . . 10-33
- 10.4.6 Available Replacement Designs . . . 10-34

10.5 Bridge Railing . . . 10-35
- 10.5.1 Design . . . 10-35
- 10.5.2 Railing Types . . . 10-35

10.6 Bridge Approach Slabs . . . 10-36
- 10.6.1 Notes to Region for Preliminary Plan . . . 10-36
- 10.6.2 Bridge Approach Slab Design Criteria . . . 10-37
- 10.6.3 Bridge Approach Slab Detailing . . . 10-37
- 10.6.4 Skewed Bridge Approach Slabs . . . 10-38
- 10.6.5 Approach Anchors and Expansion Joints . . . 10-39
- 10.6.6 Bridge Approach Slab Addition or Retrofit to Existing Bridges . . . 10-40
- 10.6.7 Bridge Approach Slab Staging . . . 10-42

10.7 Traffic Barrier on Bridge Approach Slabs . . . 10-43
- 10.7.1 Bridge Approach Slab over Wing Walls, Cantilever Walls or Geosynthetic Walls . . . 10-43
- 10.7.2 Bridge Approach Slab over SE Walls . . . 10-45

10.8 Utilities Installed with New Construction . . . 10-46
- 10.8.1 General Concepts . . . 10-46
- 10.8.2 Utility Design Criteria . . . 10-49
- 10.8.3 Box/Tub Girder Bridges . . . 10-51
- 10.8.4 Traffic Barrier Conduit . . . 10-51
- 10.8.5 Conduit Types . . . 10-52
- 10.8.6 Utility Supports . . . 10-52

10.9 Utility Review Procedure for Installation on Existing Bridges 10-54
10.9.1 Utility Review Checklist 10-55

10.10 Drilled Anchors For Permanent Attachments 10-57

10.11 Drainage Design 10-58

10.12 Bridge Security 10-59
10.12.1 General 10-59
10.12.2 Design 10-59
10.12.3 Design Criteria 10-60

10.13 Temporary Bridges 10-61
10.13.1 General 10-61
10.13.2 Design 10-61
10.13.3 NBI Requirements 10-62
10.13.4 Submittal Requirements 10-62

10.14 Bridge Standard Drawings 10-64

10.15 References 10-66

10.1 Sign and Luminaire Supports

10.1.1 Loads

A. General

The reference used in developing the following office criteria is the AASHTO LRFD *Standard Specifications for Structural Supports for Highway Signs, Luminaires, and Traffic Signals,* First Edition dated 2015 and shall be the basis for analysis and design.

B. Design Life (Section 11.5, AASHTO 2015)

1. An Infinite life fatigue design will be used for luminaire supports, overhead sign structures, and traffic signal structures. The number of cycles a structure must withstand will be based on the ADTT of a 75 year design life with each truck inducing one cycle in accordance with AASHTO LRFD *Standard Specifications for Structural Supports for Highway Signs, Luminaires, and Traffic Signals First Edition*, dated 2015 including interims.
2. Roadside sign structures will use a 10 year design life.

C. Dead Loads

Sign (including panel and wind beams, does not include vert. bracing)	3.25 lbs/ft^2
Luminaire (effective projected area of head = 3.3 sq ft)	60 lbs/each
Fluorescent Lighting	3.0 lbs/ft
Standard Signal Head	60 lbs/each
Mercury Vapor Lighting	6.0 lbs/each
Sign Brackets	Calc.
Structural Members	Calc.
5 foot wide maintenance walkway (Including mounting brackets and handrail)	160 lbs/ft
Signal Head w/3 lenses (Effective projected area with backing plate = 9.2 sq ft)	60 lbs/each

D. Live Load

A live load consisting of a single load of 500 lb distributed over 2.0 feet transversely to the member shall be used for designing members for walkways and platforms. The load shall be applied at the most critical location where a worker or equipment could be placed, see AASHTO 2015, Section 3.6.

E. Wind Loads

A 3 second gust wind speed shall be used in the AASHTO wind pressure equation. The 3 second wind gust map in AASHTO is based on the wind map in ANSI/ASCE 7-10.

Basic wind speed of 115 mph shall be used in computing design wind pressure using equation 3.8.1-1 of AASHTO Section 3.8.1. This is based on the high risk category with a mean recurrence intended of 1700 years per AASHTO Table 3.8-1.

The Alternate Method of Wind Pressures given in Appendix C of the AASHTO 2009 Specifications shall not be used.

F. Fatigue Design

Fatigue design shall conform to AASHTO Section 11 with the exception of tube shape. AASHTO does not provide fatigue calculations for shapes with less than 8 sides. Therefore, calculating the Constant Amplitude Fatigue Threshold, D_T (Table 11.9.3.1-2, AASHTO 2015) was taken to be the larger outer flat to flat distance of the rectangular tube. Fatigue Categories are listed in Table 11.6-1. Overhead Cantilever and Bridge Sign and signal structures, high mast luminaires (HMLT), poles, and bridge mounted sign brackets shall conform to the following fatigue categories.

Fatigue Category I: Overhead cantilever sign structures (maximum span of 35 feet and no VMS installation), overhead sign bridge structures, high level (high mast) lighting poles 80 feet or taller in height, bridge-mounted sign brackets, and all signal bridges. Gantry or pole structures used to support sensitive electronic equipment (tolling, weigh-in-motion, transmitter/receiver antennas, transponders, etc.) shall be designed for Fatigue Category I, and shall also meet any deflection limitations imposed by the electronic equipment manufacturers.

Fatigue Category II: For structures not explicitly falling into Category I or III.

Fatigue Category III: Lighting poles 50 feet or less in height with rectangular, square or non-tapered round cross sections, and overhead cantilever traffic signals at intersections (maximum cantilever length 65 feet).

Sign bridges, cantilever sign structures, signal bridges, and overhead cantilever traffic signals mounted on bridges shall be either attached to substructure elements (e.g., crossbeam extensions) or to the bridge superstructure at pier locations. Mounting these features to bridges as described above will help to avoid resonance concerns between the bridge structure and the signing or signal structure.

The "XYZ" limitation shown in Table 10.1.4-2 shall be met for Monotube Cantilevers. The "XYZ" limitation consists of the product of the sign area (XY) and the arm from the centerline of the posts to the centerline of the sign (Z). See Appendix 10.1-A2-1 for details.

G. Ice and Snow Loads

A 3 psf ice load may be applied around all the surfaces of structural supports, horizontal members, and luminaires, but applied to only one face of sign panels (Section 3.7, AASHTO 2015).

Walk-through VMS shall not be installed in areas where appreciable snow loads may accumulate on top of the sign, unless positive steps are taken to prevent snow build-up.

10.1.2 Bridge Mounted Signs

A. Vertical Clearance

All new signs mounted on bridge structures shall be positioned such that the bottom of the sign or lighting bracket does not extend below the bottom of the bridge as shown in Figure 10.1.2-1. The position of the sign does not need to allow for the future placement of lights below the sign. If lights are to be added in the future they will be mounted above the sign. To ensure that the bottom of the sign or lighting bracket is above the bottom of the bridge, the designer shall maintain at least a nominal 2 inch dimension between the bottom of the sign or lighting and the bottom of the bridge to account for construction tolerances and bracket arm sag. Maximum sign height shall be decided by the Region. If the structure is too high above the roadway, then the sign shall not be placed on the structure.

Bridge mounted sign brackets shall be designed to account for the weight of added lights, and for the wind effects on the lights to ensure bracket adequacy if lighting is attached in the future.

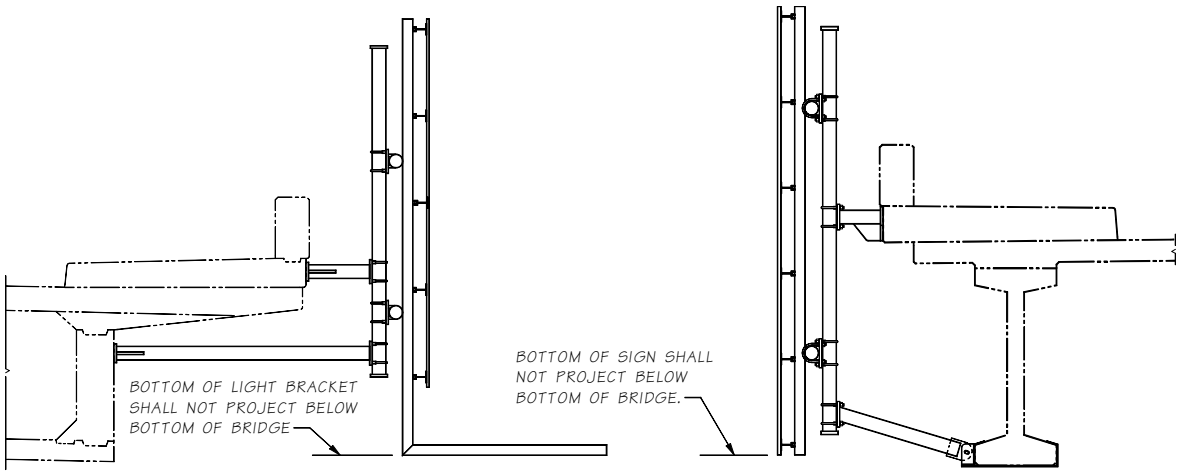

Sign Vertical Clearance
Figure 10.1.2-1

B. Geometrics

1. Signs shall be installed at approximate right angles to approaching motorists. For structures above a tangent section of roadway, signs shall be designed to provide a sign skew within 5° from perpendicular to the lower roadway (see Figure 10.1.2-2).

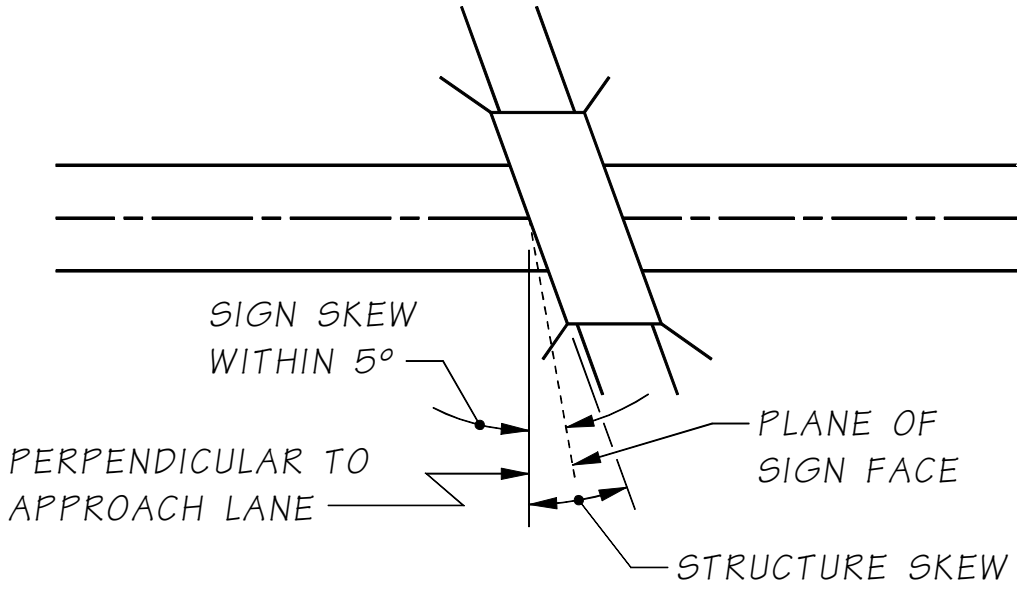

Sign Skew on Tangent Roadway
Figure 10.1.2-2

2. For structures located on or just beyond a horizontal curve of the lower roadway, signs shall be designed to provide a sign chord skew within 5° from perpendicular to the chord-point determined by the approach speed (see Figure 10.1.2-3).

3. The top of the sign shall be level.

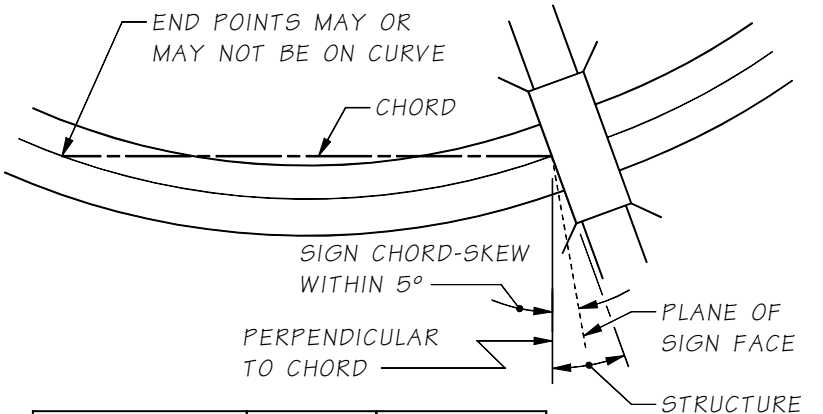

SPEED LIMIT	35 MPH OR LESS	MORE THAN 35 MPH
CHORD LENGTH	300'	500'

Sign Skew on Curved Roadway
Figure 10.1.2-3

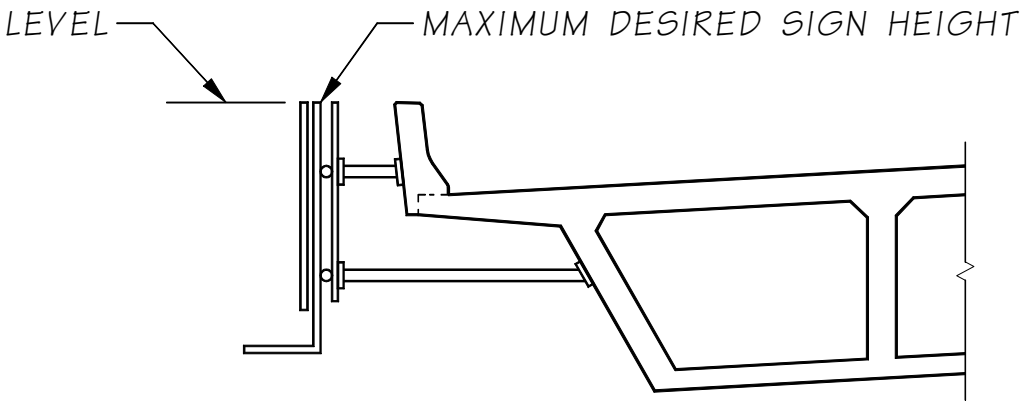

Figure 10.1.2-4

C. Aesthetics

1. The support structure shall not extend beyond the limits of the sign unless the extension is unavoidable.
2. The sign support shall be detailed in such a manner that will permit the sign and lighting bracket to be installed level.
3. When the sign support will be exposed to view, special consideration is required in determining member sizes and connections to provide as pleasing an appearance as possible.

D. Sign Placement

1. Signs shall not be placed under bridge overhangs. This causes partial shading or partial exposure to the elements and problems in lifting the material into position and making the required connections. Signs shall never be placed directly under the drip-line of the structure. These conditions may result in uneven fading, discoloring, and difficulty in reading.
2. A minimum of 2 inches of clearance shall be provided between back side of the sign support and edge of the bridge. See Figure 10.1.2-5.

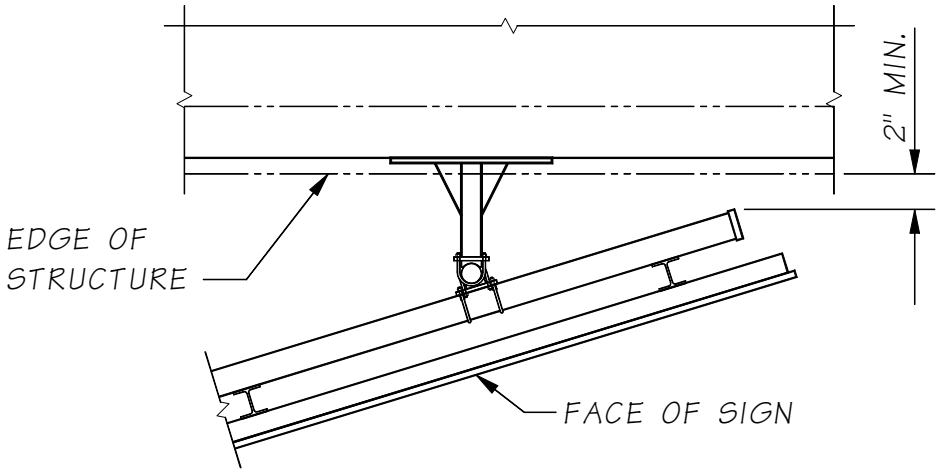

Sign Horizontal Location
Figure 10.1.2-5

E. Installation

1. Resin bonded anchors or cast-in-place ASTM F593 Group 1 Condition A anchor rods shall be used to install the sign brackets on the structure. Size and minimum installation depth shall be given in the plans or specifications. The resin bonded anchors shall be installed normal to the concrete surface. Resin bonded anchors shall not be placed through the webs or flanges of prestressed or post-tensioned girders unless approved by the WSDOT Bridge Design Engineer. Resin bonded anchors shall not be used at overhead locations other than with horizontal hole/anchor alignment.
2. Bridge mounted sign structures shall not be placed on bridges with steel superstructures unless approved by the WSDOT Bridge Design Engineer.

F. Installing/Replacing New Sign on Existing Bracket Supports

When installing a new sign on existing bracket supports, the following shall be required:

1. All hardware shall be replaced per the current *Standard Specifications*.
2. The new sign area shall not exceed the original designed sign area.
3. The inspection report for the bracket shall be reviewed to ensure that the supports are in good condition. If there is not an inspection report, then an inspection shall be performed on the bracket.

10.1.3 Monotube Sign Structures Mounted on Bridges

A. Design Loads

Design loads for the supports of the Sign Bridges shall be calculated based on assuming a 12-foot-deep sign over the entire roadway width, under the sign bridge, regardless of the sign area initially placed on the sign bridge. For Cantilever design loads, guidelines specified in Section 10.1.1 shall be followed. The design loads shall follow the same criteria as described in Section 10.1.1. Loads from the sign bridge shall be included in the design of the supporting bridge.

In cases where a sign structure is mounted on a bridge, the sign structure, from the anchor bolt group and above, shall be designed to AASHTO LRFD *Standard Specifications for Structural Supports for Highway Signs, Luminaires, and Traffic Signals* First Edition, dated 2015 including interims. The concrete the anchor bolt group and the connecting elements to the bridge structure shall be designed to the specifications in this manual and AASHTO LRFD. The appropriate LRFD load combinations from the sign structure design code shall be used with the same LRFD load combinations from the bridge design code.

B. Vertical Clearance

Vertical clearance for Monotube Sign Structures shall be 20′-0″ minimum from the bottom of the lowest sign to the highest point in the traveled lanes. See Appendix 10.1-A1-1, 10.1-A2-1, and 10.1-A3-1 for sample locations of Minimum Vertical Clearances.

C. Geometrics

Sign structures shall be placed at approximate right angles to approaching motorists. Dimensions and details of sign structures are shown in the Standard Plans G-60.10, G-60.20, G-60.30, G-70.10, G-70.20, G-70.30 and Appendix 10.1-A1-1, 10.1-A1-2, and 10.1-A1-3 and 10.1-A2-1, 10.1-A2-2, and 10.1-A2-3. When maintenance walkways are included, refer to Standard Plans G-95.10, G-95.20, G-95.30.

10.1.4 Monotube Sign Structures

A. Sign Bridge Conventional Design

Table 10.1.4-1 provides the conventional structural design information to be used for a Sign Bridge Layout, Appendix 10.1-A1-1; along with the Structural Detail sheets, which are Appendix 10.1-A1-2 and Appendix 10.1-A1-3; General Notes, Appendix 10.1-A5-1; and Miscellaneous Details, Appendix 10.1-A5-2.

B. Cantilever Conventional Design

Table 10.1.4-2 provides the conventional structural design information to be used for a Cantilever Layout, Appendix 10.1-A2-1; along with the Structural Detail sheets, which are Appendix 10.1-A2-2 and Appendix 10.1-A2-3; General Notes, Appendix 10.1-A5-1; and Miscellaneous Details, Appendix 10.1-A5-2.

STANDARD MONOTUBE SIGN BRIDGES

SPAN LENGTH	POSTS Ⓥ				BEAM A Ⓥ				BEAM B Ⓥ				BEAM C Ⓥ				BEAM D Ⓥ				CAMBER
"S"	"H"	"A"	"B"	"T1"	"L1"	"B"	"C"	"T2"	"L2"	"B"	"C"	"T2"	"L3"	"B"	"C"	"T2"					
LESS THAN 60'-0"	30'-0" OR LESS	1'-6"	2'-0"	½"	6'-0"	2'-0"	2'-0"	½"	0'-0"	2'-0"	2'-0"	½"	13'-0" TO 48'-0"	2'-0"	2'-0"	½"	-	-	-	-	2¾"
60'-0" TO 75'-0"	30'-0" OR LESS	1'-6"	2'-3"	⅝"	6'-0"	2'-3"	2'-0"	⅝"	9'-0" TO 14'-0"	2'-3"	2'-0"	⅝"	30'-0" TO 35'-0"	2'-3"	2'-0"	⅝"	-	-	-	-	3¾"
+75'-0" TO 90'-0"	30'-0" OR LESS	1'-6"	2'-3"	⅝"	6'-0"	2'-3"	2'-0"	⅝"	14'-0" TO 19'-0"	2'-3"	2'-0"	⅝"	35'-0" TO 40'-0"	2'-3"	2'-0"	⅝"	-	-	-	-	5"
+90'-0" TO 105'-0"	30'-0" OR LESS	1'-9"	2'-6"	⅝"	6'-0"	2'-6"	2'-3"	⅝"	19'-0" TO 26'-6"	2'-6"	2'-3"	⅝"	40'-0"	2'-6"	2'-3"	⅝"	-	-	-	-	6"
+105'-0" TO 120'-0"	30'-0" OR LESS	1'-9"	2'-6"	⅝"	6'-0"	2'-6"	2'-3"	⅝"	26'-6" TO 34'-0"	2'-6"	2'-3"	⅝"	40'-0"	2'-6"	2'-3"	⅝"	-	-	-	-	7½"
+120'-0" TO 135'-0"	30'-0" OR LESS	2'-0"	2'-6"	⅝"	6'-0"	2'-6"	2'-6"	⅝"	34'-0" TO 41'-6"	2'-6"	2'-6"	⅝"	40'-0"	2'-6"	2'-6"	⅝"	-	-	-	-	8½"
+135'-0" TO 150'-0"	30'-0" OR LESS	2'-0"	2'-6"	⅝"	6'-0"	2'-6"	2'-6"	⅝"	41'-6" TO 49'-0"	2'-6"	2'-6"	⅝"	40'-0"	2'-6"	2'-6"	⅝"	-	-	-	-	10½"
+150'-0" TO 165'-0"	30'-0" OR LESS	2'-0"	2'-8"	¾"	6'-0"	2'-8"	2'-8"	⅝"	27'-0"	2'-8"	2'-8"	⅝"	18'-5" TO 25'-6"	2'-8"	2'-8"	⅝"	48'-0"	2'-8"	2'-8"	⅝"	13¾"
+165'-0" TO 180'-0"	30'-0" OR LESS	2'-0"	2'-8"	¾"	6'-0"	2'-8"	2'-8"	⅝"	30'0"	2'-8"	2'-8"	⅝"	22'-6" TO 30'-0"	2'-8"	2'-8"	⅝"	48'-0"	2'-8"	2'-8"	⅝"	15¾"

SPAN LENGTH	POST BASE Ⓥ					BOLTED SPLICE #1 L1 TO L2 AND L1 TO L3						BOLTED SPLICE #2 L2 TO L3						BOLTED SPLICE #3 L3 TO L4						MAX SIGN AREA
"S"	"D1"	"S5"	"S6"	"T3"	"T6"	"S1"	"S2"	"S3"	"S4"	"T4"	"T5"	"S1"	"S2"	"S3"	"S4"	"T4"	"T5"	"S1"	"S2"	"S3"	"S4"	"T4"	"T5"	
LESS THAN 60'-0"	1½"	4	4	3"	¾"	5	-	5	-	2"	⅝"	-	-	-	-	-	-	-	-	-	-	-	-	600 SQ. FT.
60'-0" TO 75'-0"	1¾"	4	4	3"	¾"	6	-	5	-	2"	⅝"	6	-	5	-	2¼"	¾"	-	-	-	-	-	-	700 SQ FT.
+75'-0" TO 90'-0"	1¾"	4	4	3"	¾"	6	-	5	-	2"	⅝"	6	-	5	-	2¼"	¾"	-	-	-	-	-	-	800 SQ. FT.
+90'-0" TO 105'-0"	1¾"	4	5	3"	1"	7	-	6	-	2"	⅝"	7	5	6	4	2½"	1"	-	-	-	-	-	-	900 SQ. FT.
+105'-0" TO 120'-0"	1¾"	4	5	3"	1"	7	-	6	-	2"	⅝"	7	5	6	4	2½"	1"	-	-	-	-	-	-	900 SQ. FT.
+120'-0" TO 135'-0"	2"	4	5	3"	1"	7	5	7	5	2"	⅝"	7	5	7	5	2½"	1"	-	-	-	-	-	-	900 SQ. FT.
+135'-0" TO 150'-0"	2"	4	5	3"	1"	7	5	7	5	2"	⅝"	7	5	7	5	2½"	1"	-	-	-	-	-	-	900 SQ. FT.
+150'-0" TO 180'-0"	2"	4	5	3"	1"	7	5	7	5	2"	⅝"	7	5	7	5	2½"	1"	7	5	7	5	2½"	1"	900 SQ. FT.

Ⓥ ***NOTE:*** DENOTES MAIN LOAD CARRYING TENSILE MEMBERS OR TENSION COMPONENTS OF FLEXURAL MEMBERS.

Table 10.1.4-1

STANDARD MONOTUBE CANTILEVERS

Span Length	Posts Ⓥ				Beam A Ⓥ				Beam B Ⓥ				Camber
"S"	"H"	"A"	"B"	"T1"	"L1"	"B"	"C"	"T2"	"L2"	"B"	"C"	"T2"	
Less Than 20'-0"	30'-0" or Less	1'-6"	2'-0"	½"	6'-0"	2'-0"	2'-0"	½"	14'-0"	2'-0"	2'-0"	½"	2"
20'-0" to 35'-0"	30'-0" Or Less	1'-6"	2'-0"	½"	6'-0"	2'-0"	2'-0"	½"	14'-0" TO 29'-0"	2'-0"	2'-0"	½"	3½"

Span Length	Post Base Ⓥ					Bolted Splice						Maximums		
"S"	"D1"	"S5"	"S6"	"T3"	"T6"	"S1"	"S2"	"S3"	"S4"	"T4"	"T5"	Sign Area	"XYZ"	"Z"
Less Than 20'-0"	1½"	4	4	2"	¾"	5	-	5	-	2"	⅝"	194 SQ. FT.	2920 C.F.	15'-0"
20'-0" to 30'-0"	2"	4	4	3"	¾ "	5	3	5	3	2½"	⅝"	330 SQ. FT.	5363 C.F.	20'-0"
+30'-0" to 35'-0"	2"	4	4	3"	¾ "	5	3	5	3	2½"	⅝"	235 SQ. FT.	5924 C.F.	25'-0"

Ⓥ ***Note:*** Denotes Main Load Carrying Tensile Members Or Tension Components Of Flexural Members.

Table 10.1.4-2

C. Balanced Cantilever Conventional Design

Appendix 10.1-A3-1; along with the Structural Detail sheets, Appendix 10.1-A3-2 and 10.1-A3-3, General Notes, Appendix 10.1-A5-1; and Miscellaneous Details, Appendix 10.1-A5-2, provides the conventional structural design information to be used for a Balanced Cantilever Layout. Balanced Cantilevers are typically for VMS sign applications and shall have the sign dead load balanced with a maximum difference of one-third to two-thirds distribution.

D. VMS Installation

1. VMS units shall not be installed on unbalanced cantilever structures.
2. VMS installation on Sign Bridge structures designed in accordance with AASHTO 2015 shall be installed in accordance with the following:
   a. On spans 120 ft and greater up to two VMS units may be installed with a maximum weight of 4,000 lbs each. Maintenance walkways may be installed between VMS units, but may not exceed 160 lbs/ft, or exceed 50 percent of the structure span length.
   b. On spans less than 120 ft. up to three VMS units may be installed with a maximum weight of 4,000 lbs. each. Maintenance walkways may be installed between VMS units, but may not exceed 160 lbs/ft.
3. The number of VMS installed on Sign Bridge structures designed prior to AASHTO 2015 shall be reduced by one as defined in D.2-a and b.

E. Monotube Sheet Guidelines

The following guidelines apply when using the Monotube Sign Structure Appendix 10.1-A1-1, 10.1-A1-2, and 10.1-A1-3; 10.1-A2-1, 10.1-A2-2, and 10.1-A2-3; 10.1-A3-1, 10.1-A3-2, and 10.1-A3-3; 10.1-A4-1, 10.1-A4-2, and 10.1-A4-3; and 10.1-A5-1, 10.1-A5-2, and 10.1-A5-3.

1. Each sign structure shall be detailed to specify:
   a. Sign structure base Elevation, Station, and Number.
   b. Type of Foundation 1, 2, or 3 shall be used for the Monotube Sign Structures, unless a non-conventional design is required. The average Lateral Bearing Pressure for each foundation shall be noted on the Foundation sheet(s).
   c. If applicable, label the Elevation View "Looking Back on Stationing."
2. Designers shall verify the cross-referenced page numbers and details are correct.

F. Monotube Quantities

Quantities for structural steel are given in Table 10.1.4-3.

Sign Structure Material Quantities											
	Cantilever			Sign Bridge							
ASTM A572 GR. 50 or ASTM 588	20' <	20' to 30'	Balanced	60' <	60' to 75'	75' to 90'	90' to 105'	105' to 120'	120' to 135'	135' to 150'	150' to 180'
Post (plf)	132	132	132	132	176	176	204	204	215	215	267
Base PL (lbs./ea)	537	806	806	672	735	735	888	888	978	978	1029
Beam, near Post (plf)	152	152	152	152	202	202	228	228	240	240	257
Span Beam (plf)	152	152	152	152	202	202	228	228	240	240	257
Corner Stiff . (lbs./ea set)	209	209	115	218	272	272	354	354	376	376	425
Splice Pl #1 (lbs/pair)	592	706	706	578	650	650	826	826	1116	1116	1295
Splice Pl #2 (lbs/pair)	--	--	--	--	730	730	1002	1002	1116	1116	1295
Splice Pl #3 (lbs/pair)	--	--	--	--	--	--	--	--	--	--	1295
Brackets (lbs./ea)	60	60	60	60	65	65	69	69	70	70	70
6" Hand Hole (lbs./ea)	18	18	18	18	18	18	18	18	18	18	18
6" x 11" Hand Hole (lbs./ea)	30	30	30	30	30	30	18	30	30	30	30
Anchor Bolt PL (lbs./ea)	175	175	175	175	185	185	311	311	326	326	326
Cover Plates (lbs./ea)	65	65	65	--	--	--	--	--	--	--	--

Sign Structure Steel Quantities
Table 10.1.4-3

10.1.5 Foundations

A. Monotube Sign Structure Foundation Types

The foundation type is to be used shall be based on the geotechnical investigation performed and geotechnical report completed by the geotechnical engineer of record. Standard foundation designs for standard plan truss-type sign structures are provided in WSDOT Standard Plans G-60.20 and G-60.30 and G-70.20 and G-70.30. Monotube sign structure foundations are Bridge Design Office conventional designs and shall be as described in the following paragraphs:

1. Foundation Type 1, is the preferred foundation type. A foundation Type 1 consists of a drilled shaft with its shaft cap. The design of the shaft depths shown in the Sign Bridge Standard Drawings are based on a lateral bearing pressure of 2,500 psf. The designer shall check these shaft depths using AASHTO LRFD methodology. For Type 1 foundation details and shaft depths see Sign Bridge Standard Drawings 10.1-A4-1 and 10.1-A4-2. The Geotechnical report for Foundation Type 1 should include the soil friction angle, soil unit weight, allowable bearing pressure and temporary casing if required. Temporary casing shall be properly detailed in all Foundation Type 1 sheets if the Geotechnical Engineer requires them.
2. Foundation Type 2 is an alternate to Type 1 when drilled shafts are not suitable to the site. Foundation Type 2 is designed for a lateral bearing pressure of 2,500 psf. See Appendix 10.1-A4-3 for Foundation Type 2 Bridge Design Office conventional design information. The designer shall check these shaft depths using LRFD methodology.
3. Foundation Type 3 replaces the foundation Type 2 for poor soil conditions where the lateral bearing pressure is between 2,500 psf and 1,500 psf. See Bridge Standard Drawing 10.1-A4-3 for Type 3 Foundation Bridge Design Office conventional design information. The designer shall check these shaft depths using LRFD methodology.
4. Barrier Shape Foundations are foundations that include a barrier shape cap on the top portion of Foundation Types 1, 2, and 3. Foundation details shall be modified to include Barrier Shape Cap details. Appendix 10.1-A5-1 details a single slope barrier.

B. Luminaire, Signal Standard, and Camera Pole Foundation Types

Luminaire foundation options are shown on Standard Plan J-28.30. Signal Standard and Camera Pole foundation options are provided on Standard Plans J-26.10 and J-29.10 respectively.

C. Foundation Design

Shaft type foundations constructed in soil for sign bridges, cantilever sign structures, luminaires, signal standards and strain poles shall be designed in accordance with the current edition of the AASHTO LRFD *Standard Specifications for Highway Signs, Luminaires, and Traffic Signals*; Section 13.6 Drilled Shafts.

No provisions for foundation torsional capacity are provided in Section 10.13 of the AASHTO LRFD *Standard Specifications for Highway Signs, Luminaires, and Traffic Signals*. The following approach can be used to calculate torsional capacity of sign structure, luminaire, and signal standard foundations:

Torsional Capacity, ϕT_n,

$$T_n = F*\tan\varphi D \qquad 10.1.5(1)$$

Where:

F = Total force normal to shaft surface (kip)

D = Diameter of shaft (feet)

φ = Soil to foundation contact friction angle (degree), use smallest for variable soils

1. Monotube Sign Structures Foundation Type 1 Design

   The standard embedment depth "Z", shown in the table on Monotube Sign Structure Standard Drawing 10.1-A4-1, shall be used as a minimum embedment depth and shall be increased if the shaft is placed on a sloped surface, or if the allowable lateral bearing pressures are reduced from the standard 2500 psf. The standard depth assumed that the top 4 feet of the C.I.P. cap is not included in the lateral resistance (i.e., shaft depth "D" in the code mentioned above), but is included in the overturning length of the sign structure. The sign structure shaft foundation GSPs under Section 8-21 in the RFP Appendix shall be included with all Foundation Type 1 shafts.

2. Monotube Sign Structures Foundation Type 2 and 3

   These foundation designs are Bridge Design Office convention and shall not be adjusted or redesigned. They are used in conditions where a Foundation Type 1 (shaft) would be impractical due to difficult drilling or construction and when the Geotechnical Engineer specifies their use. The concept is that the foundation excavation would maintain a vertical face in the shape of the Foundation Type 2 or 3. Contractors often request to over-excavate and backfill the hole, after formwork has been used to construct this foundation type. This is only allowed with the Geotechnical engineer's approval, if the forming material is completely removed, and if the backfill material is either CDF or concrete class 3000 or better.

3. Monotube Sign Structures Non-Conventional Design Foundations

   The Geotechnical Engineer of record shall identify conditions where the foundation types (1, 2, or 3) will not work. In this case, the design forces are calculated, using the AASHTO LRFD *Standard Specifications for Structural Supports for Highway Signs, Luminaires, and Traffic Signals*, and applied at the bottom of the structure base plate. These forces are then considered service loads and the non-conventional design foundation is designed with the appropriate Service, Strength, and Extreme Load Combination Limit States and current design practices of the AASHTO LRFD and this manual. Some examples of these foundations are spread footings, columns and shafts that extend above ground adjacent to retaining walls, or connections to traffic barriers on bridges. The anchor rod array shall be used from Tables 10.1.4-1

and 10.1.4-2 and shall be long enough to develop the rods into the confined concrete core of the foundation. The rod length and the reinforcement for concrete confinement, shown in the top four feet of the Foundation Type 1, shall be used as a minimum.

4. Signal Foundation Design

   The traffic signal standard GSPs under Section 8-20 shall apply for foundations in substandard soils.

D. Foundation Quantities

1. Barrier quantities are approximate and can be used for all Foundation Types:

Class 4000 Concrete	7.15 CY (over shaft foundation)
Grade 60 Rebar	372 lbs

2. Miscellaneous steel quantities (anchor rods, anchor plate, and template) for all Monotube Sign Structure foundation types are listed below (per foundation). Quantities vary with span lengths as shown.

60 feet and under	=	1,002 pounds
61 feet to 90 feet	=	1,401 pounds
91 feet to 120 feet	=	1,503 pounds
121 feet to 180 feet		Barrier mounted sign bridge not recommended for these spans.

3. Monotube Sign Structure Foundation Type 1-3 quantities for concrete, rebar and excavation are given in Table 10.1.5-1. For Sign Bridges, the quantities shown below are for one foundation and there are two foundations per Sign Bridge. If the depth "Z" shown in the table on Bridge Standard Drawing 10.1-A4-1 is increased, these values should be recalculated.

	Cantilever Signs			Sign Bridges			
Concrete Cl. 4000 (cu. yard)	**20′ and Under**	**20′ – 30′**	**30' – 35'**	**60′ and Under**	**60′ – 90′**	**90′ – 120′**	**120′ – 180′**
Type 1	6.3	7.5	9.4	7.7	9.4	10.6	11.4
Type 2	8.0	10.5	12.2	10.0	12.2	14.1	15.0
Type 3	11.1	14.1	16.1	13.0	16.1	18.6	20.0
Rebar Gr. 60 Pounds							
Type 1	685	1,027	2,251	1,168	2,251	3,256	4,255
Type 2	772	1,233	1,724	1,190	1,724	2,385	2,838
Type 3	917	1,509	2,136	1,421	2,136	2,946	3,572
Excavation (cu. yard)							
Type 1	9.8	10.9	12.8	10.9	12.8	14.1	14.9
Type 2	20.7	25.7	29.0	24.6	29.0	32.9	34.6
Type 3	29.0	34.6	39.0	32.9	39.0	44.0	47.8

Sign Structure Foundation Material Quantities
Table 10.1.5-1

10.1.6 Truss Sign Bridges: Foundation Sheet Design Guidelines

If a Truss sign structure is used, refer to *Standard Plans* for foundation details. There are four items that should be addressed when using the *Standard Plans*, which are outlined below. For details for F-shape barrier details not shown in *Standard Plans* contact Bridge Office to access archived Bridge Office details.

1. Determine conduit needs. If none exist, delete all references to conduit. If conduit is required, verify with the Region as to size and quantity.
2. Show sign bridge base elevation, number, dimension and station.
3. The concrete barrier transition section shall be in accordance with the *Standard Plans*.
4. The quantities shall be based on the *Standard Plans* details as needed.

10.2 Bridge Traffic Barriers

10.2.1 General Guidelines

The design criteria for traffic barriers on structures shall be in accordance with Section 13 of the AASHTO LRFD. The following guidelines supplement the requirements in AASHTO LRFD.

The WSDOT Bridge and Structures standard for traffic barriers on new bridges and bridge approach slabs shall be a 42 inch Single Slope concrete barrier for all interstate routes, major highway routes, and over National Highway System (NHS) routes unless special conditions apply. The 42 inch requirement is in accordance with the "*Fall Protection*" requirements of the Washington State Department of Labor and Industries, (WAC 296-155-24609 and WAC 296-155-24615 2a), and the July 2014 AASHTO resolution for *Fall Protection*.

The WSDOT Bridge and Structures standard for existing bridges, bridge rehabilitation projects, Structural Earth Wall and Geosynthetic wall traffic barriers, retaining walls, and median barrier shall be a 34 inch or 42 inch Single Slope traffic barrier.

Use of a 32 inch or 42 inch F Shape concrete barrier shall be limited to locations where there is F Shape concrete barrier on the approach grade to a bridge or for continuity within a corridor.

Use of a 32 inch Pedestrian concrete barrier shall be limited to locations with sidewalk.

Use of a 42 inch or 54 inch combination barrier (32 inch or 34 inch concrete barrier increased by metal railing) are less economical, require more maintenance, and shall be limited for purposes such as scenic roads. For additional requirements for pedestrian and bicycle/pedestrian railings, see Section 10.5.1.

It shall be the Bridge and Structures Office policy to design traffic barriers for new structures using minimum Test Level 4 (TL-4) design criteria regardless of the height of the barrier safety shape. The Test Level shall be indicated in the Bridge General Notes or General Notes. A Test Level 5 (TL-5) traffic barrier shall be used on new structures under the following conditions:

- "T" intersections on a structure.
- Barriers on structures with a radius of curvature less than 500 ft, TL-4 is adequate for the barrier on the inside of the curve.
- Greater than 10 percent Average Daily Truck Traffic (ADTT) where approach speeds are 50 mph or greater (e.g., freeway off-ramps).
- Accident history suggests a need.
- Protection of schools, business, or other important facilities below the bridge.

See AASHTO LRFD Section 13 for additional Test Level selection criteria.

A list of crash tested barriers can be found through the FHWA website at: https://safety.fhwa.dot.gov/roadway_dept/countermeasures/reduce_crash_severity/listing.cfm?code=long

10.2.2 Bridge Railing Test Levels

It must be recognized that bridge traffic barrier performance needs differ greatly from site to site. Barrier designs and costs should match facility needs. This concept is embodied in the AASHTO LRFD. Six different bridge railing test levels, TL-1 thru TL-6, and associated crash test/performance requirements are given in AASHTO LRFD Section 13 along with guidance for determining the appropriate test level for a given bridge.

10.2.3 Available WSDOT Designs

A. Service Level 1 (SL-1) Weak Post Guardrail (TL-2)

This bridge traffic barrier is a crash tested weak post rail system. It was developed by Southwest Research Institute and reported in NCHRP Report 239 for low-volume rural roadways with little accident history. This design has been utilized on a number of short concrete spans and timber bridges. A failure mechanism is built into this rail system such that upon a 10 kip applied impact load, the post will break away from the mounting bracket. The thrie beam guardrail will contain the vehicle by virtue of its ribbon strength. To ensure minimal or no damage to the bridge deck and stringers, the breakaway connection may be modified for a lower impact load (2 kip minimum) with approval of the Bridge Design Engineer. The 2 kip minimum equivalent impact load is based on evaluation of the wood rail post strength tested in NCHRP Report 239. The appropriate guardrail approach transition shall be a Case 14 placement as shown on WSDOT Standard Plan C-2h. For complete details see Appendix 10.4-A1.

B. Texas T-411 Aesthetic Concrete Baluster (TL-2)

Texas developed this standard for a section of highway that was considered to be a historic landmark. The existing deficient concrete baluster rail was replaced with a much stronger concrete baluster that satisfactorily passed the crash test performance criteria set forth by the NCHRP Report 230. For details, visit TXDOT's Bridge and Structures website at www.txdot.gov/inside-txdot/division/bridge.html.

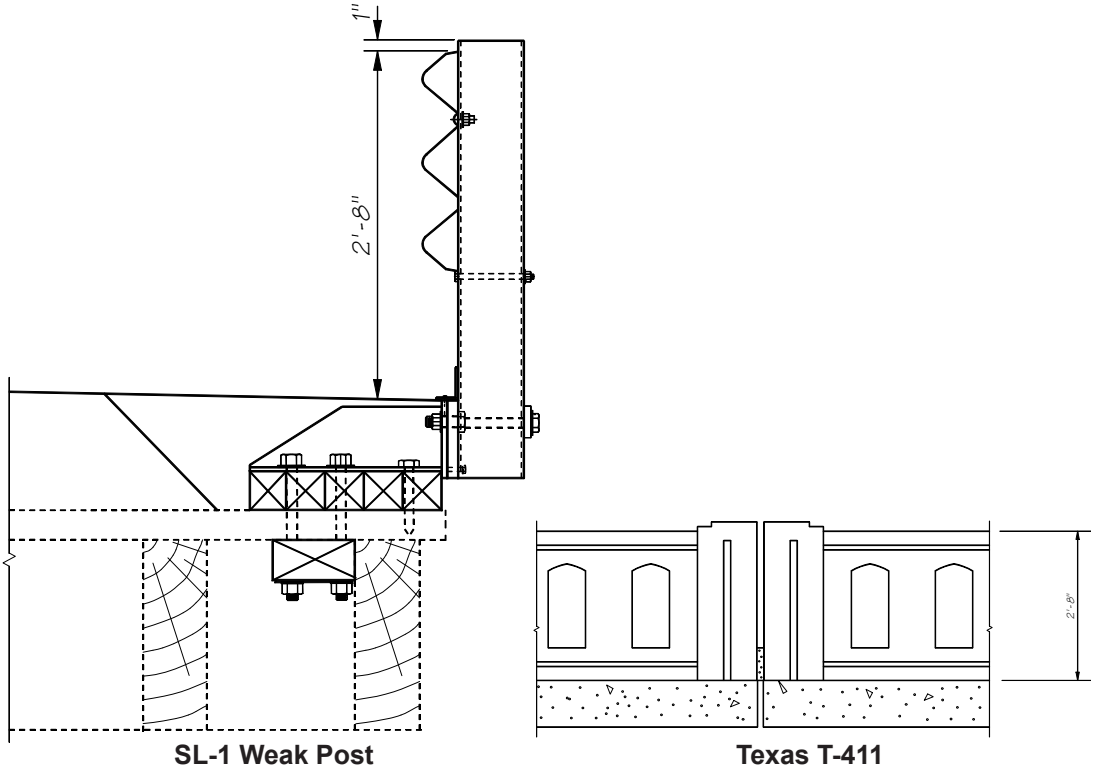

Figure 10.2.3-1

C. Traffic Barrier – 32″ Shape F (TL-4)

This configuration was crash tested in the late 1960s, along with the New Jersey Shape, under NCHRP 230 and again at this test level under NCHRP 350. The steeper vertical shape tested better than the New Jersey face and had less of an inclination to roll vehicles over upon impact. For future deck overlays, an encroachment of 2.0 in., leaving a 1.0 in. lip has been satisfactorily tested for safety shapes, see AASHTO Article C13.7.3.2. For complete details see Bridge Standard Drawings 10.2-A1 and 10.2-A2.

D. Traffic Barrier – 34″ Single Slope (TL-4)

This concrete traffic barrier system was designed by the state of California in the 1990s to speed up construction by using the "slip forming" method of construction. It was tested under NCHRP 350. WSDOT has increased the height from 32″ to 34″ to match the approach traffic barrier height and to allow the placement of one HMA overlay. Due to inherent problems with the "slip forming" method of traffic barrier construction WSDOT has increased the concrete cover on the traffic side from 1½″ to 2½″. For complete details, see Bridge Standard Drawing 10.2-A3.

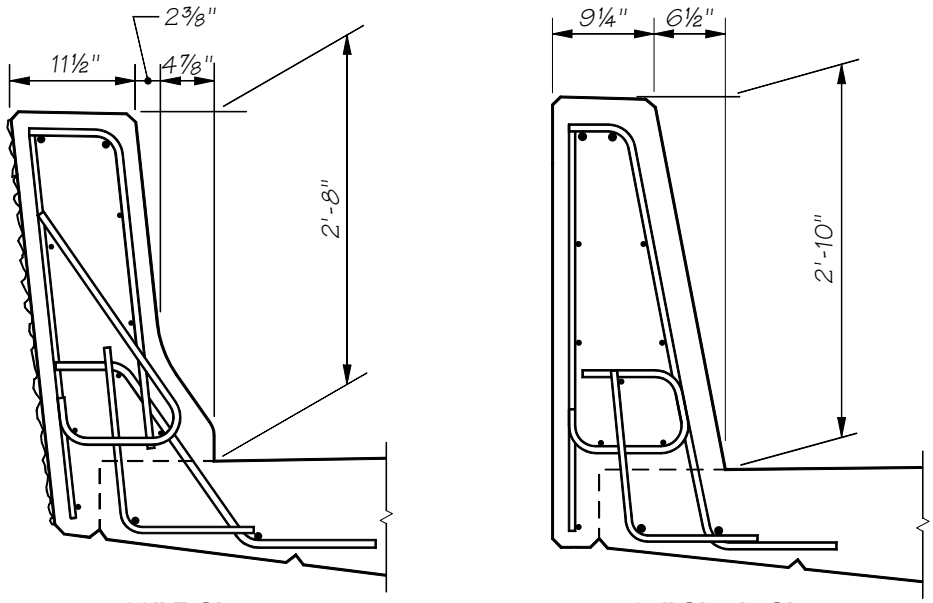

Figure 10.2.3-2

E. Pedestrian Barrier (TL-4)

This crash tested rail system offers a simple to build concrete alternative to the New Jersey and F-Shape configurations. This system was crash tested under both NCHRP 230 and 350. Since the traffic face geometry is better for pedestrians and bicyclists, WSDOT uses this system primarily in conjunction with a sidewalk. For complete details, see Bridge Standard Drawing 10.2-A4.

F. Oregon 3-Tube Curb Mounted Traffic Barrier (TL-4)

This is another crash tested traffic barrier that offers a lightweight, see-through option. This system was crash tested under both NCHRP 230 and 350. A rigid thrie beam guardrail transition is required at the bridge ends. For details, see the Oregon Bridge and Structure website at www.oregon.gov/ODOT/HWY/ENGSERVICES/Pages/bridge_drawings.aspx.

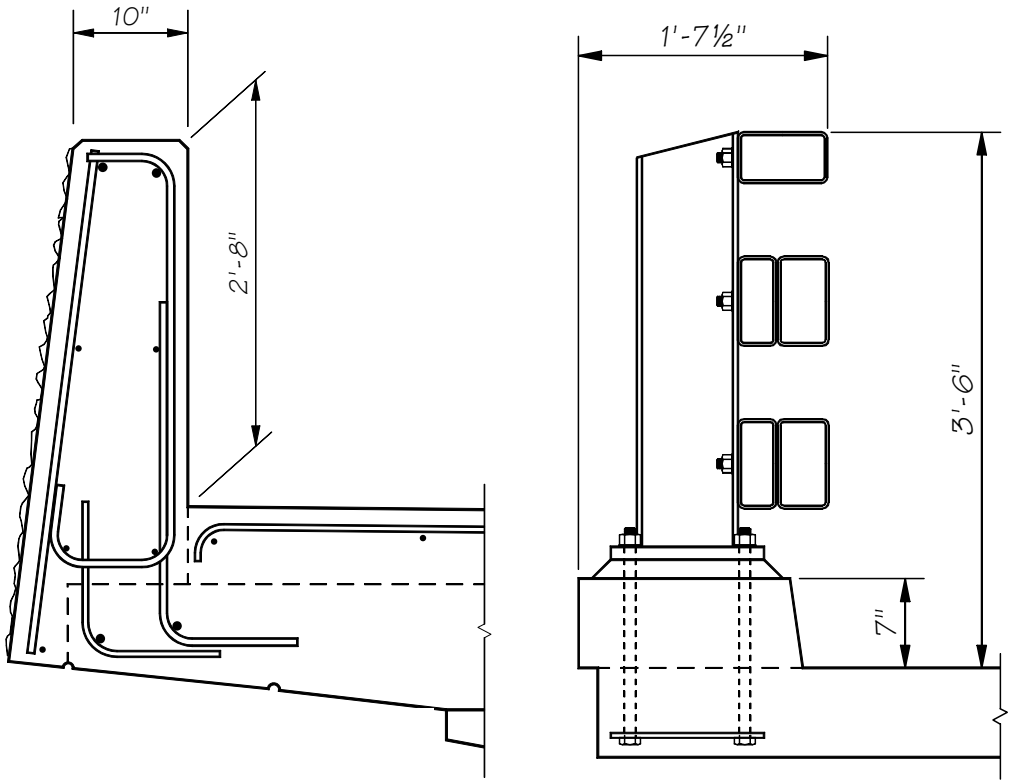

Figure 10.2.3-3

G. Traffic Barrier – 42″ Shape F (TL-4 and TL-5)

This barrier is very similar to the 32″ F-shape concrete barrier in that the slope of the front surface is the same except for height. For complete details, see Bridge Standard Drawing 10.2-A6.

H. Traffic Barrier – 42″ Single Slope (TL-4 and TL-5)

This option offers a simple to build alternative to the Shape F configuration. For complete details see Bridge Standard Drawing 10.2-A6.

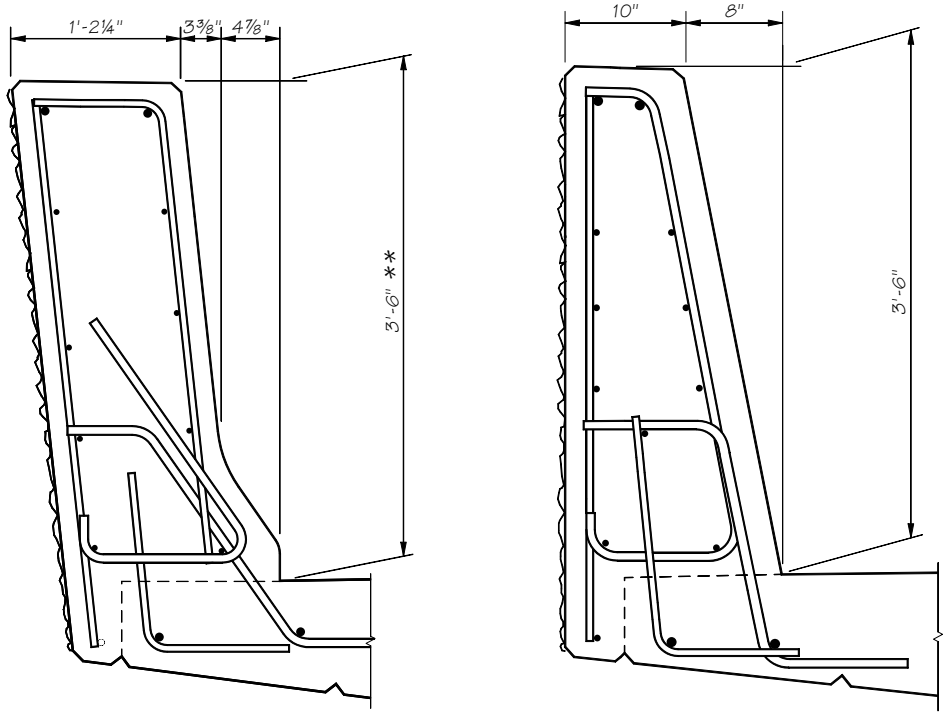

42″ F-Shape 42″ Single Slope

Figure 10.2.3-4

10.2.4 Design Criteria

A. Design Values

AASHTO LRFD Appendix A13 shall be used to design bridge traffic barriers and their supporting elements (i.e. the deck).

Concrete traffic barriers shall be designed using yield line analysis as described in AASHTO LRFD A13.3.1. The impact loads on traffic barriers shall be applied at the height specified for intended Test Levels in accordance to the AASHTO LRFD Table A13.2-1 "*Design Forces for Traffic Railing* (32-inch for TL-4, and 42-inch for TL-5)". WSDOT Standard F Shape and Single Slope barriers meet these requirements.

Deck overhangs supporting traffic barriers shall be designed in accordance with AASHTO LRFD A13.4. For concrete traffic barriers in Design Case 1, AASHTO requires M_S, the deck overhang flexural resistance, to be greater than M_c of the concrete traffic barrier base. This requirement is consistent with yield line analysis (see AASHTO LRFD CA13.3.1), but results in over conservative deck overhang designs.

In order to prevent this unnecessary overdesign of the deck overhang, the nominal traffic barrier resistance to transverse load R_W (AASHTO LRFD A13.3.1) transferred from the traffic barrier to deck overhang shall not exceed 120 percent of the design force F_t (AASHTO LFRD Table A13.2-1) required for a traffic barrier. The deck overhang shall be designed in accordance with the requirements of AASHTO LRFD A13.4.2 to provide a flexural resistance M_s, acting coincident with the tensile force T. At the inside face of the barrier M_s may be taken as:

for an interior barrier segment–$M_s = \frac{R_w \cdot H}{L_C + 2 \cdot H}$

and for an end barrier segment–$M_s = \frac{R_w \cdot H}{L_C + H}$

However, M_s need not be taken greater than M_c at the base. T shall be taken as:

for an interior barrier segment–$T = \frac{R_w}{L_C + 2 \cdot H}$

and for an end barrier segment–$T = \frac{R_w}{L_C + H}$

The end segment requirement may be waived if continuity between adjacent barriers is provided.

When an HMA overlay is required for initial construction, increase the weight for Shape F traffic barrier. See Section 10.2.4.C for details.

B. Geometry

The traffic face geometry is part of the crash test and shall not be modified. Contact the WSDOT Bridge and Structure Office Bridge Rail Specialist for further guidance.

Thickening of the traffic barrier is permissible for architectural reasons. Concrete clear cover must meet minimum concrete cover requirements but can be increased to accommodate rustication grooves or patterns.

C. Standard Detail Sheet Modifications

When designing and detailing a bridge traffic barrier on a superelevated bridge deck the following guidelines shall be used:

- For bridge decks with a superelevation of 8 percent or less, the traffic barriers (and the median barrier, if any) shall be oriented perpendicular to the bridge deck.
- For bridge decks with a superelevation of more than 8 percent, the traffic barrier on the low side of the bridge (and median barrier, if any) shall be oriented perpendicular to an 8 percent superelevated bridge deck. For this situation, the traffic barrier on the high side of the bridge shall be oriented perpendicular to the bridge deck.

The standard detail sheets are generic and may need to be modified for each project. The permissible modifications are:

- Removal of the electrical conduit, junction box, and deflection fitting details.
- Removal of design notes.
- If the traffic barrier does not continue on to a wall, remove W1 and W2 rebar references.
- Removal of the non-applicable guardrail end connection details and verbiage.
- If guardrail is attached to the traffic barrier, use either the thrie beam end section “Design F” detail or the w-beam end section “Design F” detail. If the traffic barrier continues off the bridge, approach slab, or wall, remove the following:
- Guardrail details from all sheets.
- Conduit end flare detail.
- Modified end section detail and R1A or R2A rebar details from all sheets.
- End section bevel.
- Increase the 3″ toe dimension of the Shape F traffic barriers up to 6″ to accommodate HMA overlays.

Barrier Impact Design Forces on Traffic Barrier & Deck Overhang													
Parameters		Type F 32 in. (TL-4)		Single Slope 34 in. (TL-4)		Type F 42 in. (TL-4)		Single Slope 42 in. (TL-4)		Type F 42 in. (TL-5)		Single Slope 42 in. (TL-5)	
		Interior	End*	Interior	End*	Interior	End*	Interior	End*	Interior	End*	Interior	End*
Traffic Barrier Design	Average M_c (ft-kips/ft)	20.55	20.55	19.33	19.33	25.93	25.93	22.42	22.42	25.93	25.93	22.42	36.04
	M_c at Base (ft-kips/ft)	27.15	27.15	26.03	26.03	32.87	32.87	30.66	30.66	32.87	32.87	30.66	49.52
	M_w (ft-kips)	42.47	46.04	46.01	43.16	72.54	71.72	60.66	57.26	98.23	96.93	83.85	79.12
	L_c (ft)	8.62	4.76	9.30	4.81	10.77	5.32	10.63	5.21	15.05	9.39	14.99	8.87
	R_w (kips)	132.82	73.31	126.92	65.69	159.62	78.83	136.17	66.81	223.00	139.20	192.02	182.61
	F_t (kips)	54.00	54.00	54.00	54.00	54.00	54.00	54.00	54.00	124.00	124.00	124.00	124.00
Deck Overhang Design	$1.2*F_t$ (kips)	64.80	64.80	64.80	64.80	64.80	64.80	64.80	64.80	148.80	148.80	148.80	148.80
	Design R_w (kips)	64.80	64.80	64.80	64.80	64.80	64.80	64.80	64.80	148.80	139.20	148.80	148.80
	$R_w*H/(L_c+aH)$ (ft-kips/ft)**	12.39	23.28	12.27	24.01	9.72	19.59	9.80	19.83	23.62	37.79	23.69	42.11
	Design M_s (ft-kips/ft)	12.39	23.28	12.27	24.01	9.72	19.59	9.80	19.83	23.62	32.87	23.69	42.11
	Design T (kips/ft)	4.65	8.73	4.33	8.47	3.65	7.35	3.68	7.44	6.75	10.80	6.77	12.03
Deck to Barrier Reinforcement	A_s required (in^2/ft)	0.29	0.57	0.29	0.59	0.17	0.35	0.20	0.41	0.43	0.60	0.49	0.91
	A_s provided (in^2/ft)	0.41	0.62	0.41	0.62	0.41	0.62	0.41	0.62	0.59	0.89	0.59	0.97
	S_1 Bars	#5 @ 9 in	#5 @ 6 in	#5 @ 9 in	#5 @ 6 in	#5 @ 9 in	#5 @ 6 in	#5 @ 9 in	#5 @ 6 in	#6 @ 9 in	#6 @ 6 in	#6 @ 8 in	#6 @ 5.5 in

*Traffic barrier cross sectional dimensions and reinforcement used for calculation of end segment parameters are the same as interior segments (except TL-5 Single Slope 42 in. barrier where end section reinforcement differs from interior segments). Parameters for modified end segments shall be calculated per AASHTO-LRFD article A13.3, A13.4, and the WSDOT BDM.

**a = 1 for an end segment and 2 for an interior segment

Loads are based on vehicle impact only. For deck overhang design, the designer must also check other limit states per LRFD A13.4.1.

f_v = 60 ksi

f'_c = 4 ksi

Table 10.2.4-1

D. Miscellaneous Design Information

- Show the back of pavement seat in the "Plan – Traffic Barrier" detail.
- At roadway expansion joints, show traffic barrier joints normal to centerline except as shown on sheets Appendix 9.1-A1-1 and 9.1-A2-1.
- When an overlay is required, the 2′-8″ minimum dimension shown in the "Typical Section – Traffic Barrier" shall be referenced to the top of the overlay.
- When bridge lighting is part of the contract, include the lighting bracket anchorage detail sheet.
- Approximate quantities for the traffic barrier sheets are:

Barrier Type	Concrete Weight (lb/ft)	Steel Weight (lb/ft)
32″ F-shape (3″ toe)	460	18.6
32″ F-shape (6″ toe)	510	19.1
34″ Single Slope	490	16.1
42″ F-shape (3″ toe)	710	25.8
42″ F-shape (6″ toe)	765	28.4
42″ Single Slope	670	22.9
32″ Pedestrian	640*	14.7

Using concrete class 4000 with a unit weight of 155 lb/ft^3

*with 6″ sidewalk, will vary with sidewalk thickness

- Steel Reinforcement Bars:

  S_1 & S_2 or S_3 & S_4 and W_1 & W_2 bars (if used) shall be included in the Bar List. S_1, S_3, and W_1 bars shall be epoxy coated.

10.3 At Grade Concrete Barriers

10.3.1 Differential Grade Concrete Barriers

The top of the differential grade concrete barrier shall have a minimum width of 6″. If a luminaire or sign is to be mounted on top of the differential grade concrete barrier, then the width shall be increased to accommodate the mounting plate and 6″ of clear distance on each side of the luminaire or sign pole. The transition flare rate shall follow the *Design Manual* M 22-01.

A. Differential Grade Concrete Barriers

Concrete barriers at grade are sometimes required in median areas with different roadway elevations on each side. The standard Single Slope barrier can be used for a grade difference up to 10″ for a 2′-10″ safety shape and up to 6″ for a 3′-6″ safety shape. See Standard Plans C-70.10 and C-80.10 for details.

If the difference in grade elevations is 4′-0″ or less, then the concrete barrier shall be designed as a rigid system in accordance with AASHTO LRFD with the following requirements:

1. All applicable loads shall be applied in accordance to AASHTO LRFD Section 3. The structural capacity of the differential grade concrete barrier and supporting elements shall be designed for the required Test Level vehicle impact design forces in accordance with AASHTO LRFD Sections 5 and 13. Any section along the differential grade barrier and supporting elements shall not fail in shear, bending, or torsion when the barrier is subjected to the TL impact forces.
2. For soil loads without vehicle impact loads, the concrete barrier shall be designed as a retaining wall (barrier weight resists overturning and sliding). Passive soil resistance may be considered with concurrence by the geotechnical engineer.
3. Vehicle impact loads shall be applied on the side of the concrete barrier retaining soil if there is traffic on both sides. The vehicle impact loads shall be applied at the height specified for intended Test Levels in accordance to the AASHTO LRFD Section 13, Table A13.2-1 "*Design Forces for Traffic Railing* (32-inch for TL-4, and 42-inch for TL-5)".
4. For soil loads with vehicle impact loads, the AASHTO LRFD Extreme Event loading for vehicular collision shall also be analyzed. Equivalent Static Load (ESL) per NCHRP Report 663 may be applied as the transverse vehicle impact load for evaluating sliding, bearing, and overturning only. For TL-3 and TL-4 barrier systems, the ESL shall be 10 kips and for TL-5, the ESL shall be 23 kips. The point of rotation for overturning shall be taken at the toe of barrier. Sliding resistance factor shall be 0.8 and overturning resistance factor shall be 0.5 (supersedes AASHTO 10.5.5.3.3).

5. The effective length of the concrete barrier required for stability shall be no more than 10 times the overall height, but not to exceed the length between barrier expansion joints (or one precast section). The barrier shall act as a rigid body behavior and shall be continuous throughout this length of barrier. Any coupling between adjacent barrier sections or friction that may exist between free edges of barrier and the surrounding soil shall be neglected.
6. A special impact analysis shall be performed at the barrier ends if the barrier terminates without being connected to a rigid object or dowelled to another barrier. Differential barrier deflection from barrier impact may cause a vehicle to "snag" on the undeflected barrier. The barrier depth may need to be increased at the end to prevent this deflection.
7. The differential grade traffic barrier shall have dummy joints at 8 to 12 foot centers based on project requirements.
8. Full depth expansion joints with shear dowels at the top will be required at intervals based on analysis but not to exceed a 120′-0″ maximum spacing.
9. Barrier bottom shall be embedded a minimum 6″ below roadway. Roadway subgrade and ballast shall be extended below whole width of differential grade barrier.

Median traffic barriers with a grade difference greater than 4′-0″ shall be designed as standard plan retaining walls with a traffic barrier at the top and a barrier shape at the cut face.

10.3.2 Traffic Barrier Moment Slab

A. General

The guidelines provided herein are based on NCHRP Report 663 with the exception that a resistance factor of 0.5 shall be used to determine rotational resistance. This guideline is applicable for TL-3, TL-4, and TL-5 barrier systems as defined in Section 13 of AASHTO LRFD *Bridge Design Specifications*.

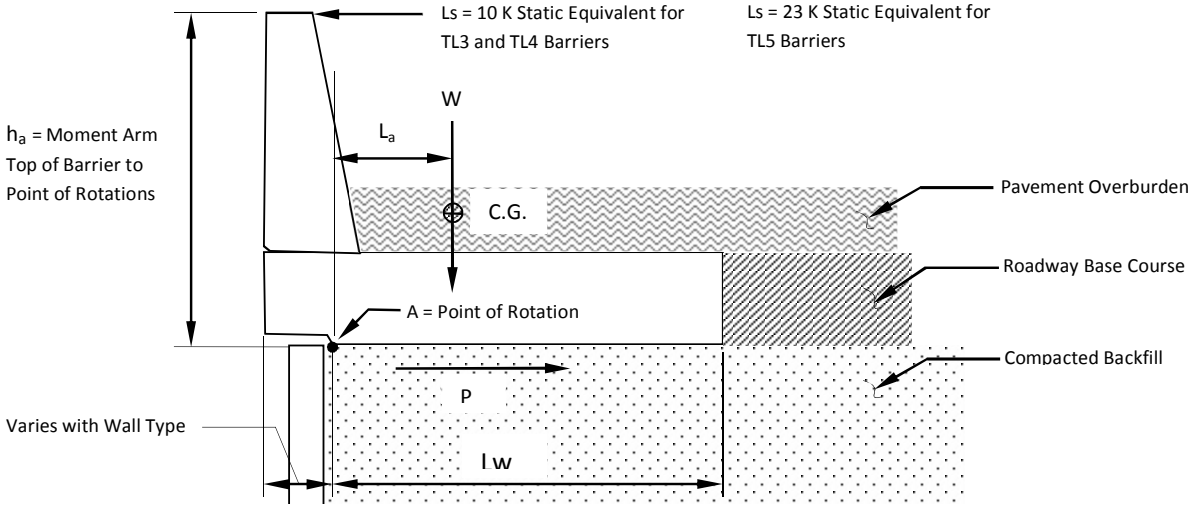

Global Stability of Barrier–Moment Slab System
Figure 10.3.2-1

B. Guidelines for Moment Slab Design

1. Structural Capacity

The structural capacity of the barrier and concrete moment slab shall be designed using impulse loads at appropriate Test Level (TL-3, TL-4, TL-5) applied to the top of the barrier in accordance with Sections 5 and 13 of AASHTO LRFD. Any section along the moment slab shall not fail in shear, bending, or torsion when the barrier is subjected to the design impact loads. The torsion capacity of the moment slab must be equal to or greater than the traffic barrier moment generated by the specified TL static equivalent of the vehicle impulse load.

The moment slab shall be designed as a deck supporting barrier in accordance to AASHTO LRFD A13.4.2 as modified by BDM Section 10.2.4.A. The moment slab reinforcement shall be designed to resist combined forces from the moment M_S (kip-ft/ft) and the tensile force T (kip/ft). M_S and T are determined from the lesser of the ultimate transverse resistance of barrier R_W (kip) and 120 percent of transverse vehicle impact force F_T (kip). M_S is not to be exceeded by the ultimate strength of barrier at its base M_C (kip-ft/ft).

2. Global Stability

Bearing stress, sliding, and overturning stability of the moment slab shall be based on an Equivalent Static Load (ESL) applied at the height specified for intended Test Levels in accordance to the AASHTO LRFD Section 13, Table A13.2-1 "*Design Forces for Traffic Railing* (32-inch for TL-4, and 42-inch for TL-5)". For TL-3 and TL-4 barrier systems, the ESL shall be 10 kips. For TL-5 barrier systems, the ESL shall be 23 kips.

The Equivalent Static Load (ESL) is assumed to distribute over the length of continuous moment slab through rigid body behavior. Barrier shall also be continuous or have shear connections between barrier sections if precast throughout this length of moment slab. Any coupling between adjacent moment slabs or friction that may exist between free edges of the moment slab and the surrounding soil should be neglected.

3. Minimum and Maximum Dimensions

Moment slabs shall have a minimum width of 4.0 feet measured from the point of rotation to the heel of the slab and a minimum average depth of 0.83 feet. Moment slabs meeting these minimum requirements are assumed to provide rigid body behavior up to a length of 60 feet limited to the length between moment slab joints.

Rigid body behavior may be increased from 60 feet to a maximum of 120 feet if the torsional rigidity constant of the moment slab is proportionately increased and the reinforcing steel is designed to resist combined shear, moment, and torsion from TL static equivalent of the vehicle impulse loads.

For example: Rigid Body Length = (J'/J60)x(60 ft.) < 120 feet

The torsional rigidity constant for moment slabs shall be based on a solid rectangle using the following formula:

$$J = a \cdot b^3 \left[\frac{16}{3} - 3.36\left(\frac{b}{a}\right)\left(1 - \frac{b^4}{12a^4}\right)\right]$$

Where:
2a = total width of moment slab
2b = average depth of moment slab

For example:
Minimum Moment Slab Width = 48 inches: a = 24 inches
Minimum Moment Slab Average Depth = 10 inches: b = 5 inches
J = J60 = 13,900 in^4

4. Sliding of the Barrier

The factored static resistance to sliding (ϕP) of the barrier-moment slab system along its base shall satisfy the following condition (Figure 2).

$$\phi P \geq \gamma Ls \quad (1)$$

Where:
Ls = Equivalent Static Load (10 kips for TL-3 or TL-4, 23 kips for TL-5)
φ = resistance factor (0.8) Supersedes AASHTO 10.5.5.3.3—Other Extreme Limit States
γ = load factor (1.0) for TL-3 and TL-4 [crash tested extreme event]
load factor (1.2) for TL-5 [untested extreme event]
P = static resistance (kips)

P shall be calculated as: (2)

$$P = W \tan \phi_r$$

Where:
W = weight of the monolithic section of barrier and moment slab between joints or assumed length of rigid body behavior whichever is less, plus any material laying on top of the moment slab
φr = friction angle of the soil on the moment slab interface (°)

If the soil-moment slab interface is rough (e.g., cast in place), ϕ_r is equal to the friction angle of the soil ϕ_s. If the soil-moment slab interface is smooth (e.g., precast), $\tan \phi_r$ shall be reduced accordingly ($0.8 \tan \phi_s$).

5. Overturning of the Barrier

The factored static moment resistance (ϕM) of the barrier-moment slab system to over-turning shall satisfy the following condition (Figure 1).

The factored static moment resistance (ϕM) of the barrier-moment slab system to overturning shall satisfy the following condition (Figure 1).

$$\phi M \geq \gamma L_s h_a \quad (3)$$

Where:

A = point of rotation, where the toe of the moment slab makes contact with compacted backfill adjacent to the fascia wall

L_w = width of moment slab

L_s = Equivalent Static Load (10 kips for TL-3 and TL-4) (23 kips for TL-5)

φ = resistance factor (0.5) Supersedes AASHTO 10.5.5.3.3— Other Extreme Limit States and NCHRP Report 663

γ = load factor (1.0) for TL-3 and TL-4 [crash tested extreme event] load factor (1.2) for TL-5 [untested extreme event]

h_a = moment arm taken as the vertical distance from the point of impact due to the dynamic force (top of the barrier) to the point of rotation A

M = static moment resistance (kips-ft)
M shall be calculated as:

$$M = W (L_a) \quad (4)$$

W = weight of the monolithic section of barrier and moment slab between joints or assumed length of rigid body behavior whichever is less, plus any material laying on top of the moment slab

L_a = horizontal distance from the center of gravity of the weight W to point of rotation A

The moment contribution due to any coupling between adjacent moment slabs, shear strength of the overburden soil, or friction which may exist between the backside of the moment slab and the surrounding soil shall be neglected.

C. Guidelines for the Soil Reinforcement

Design of the soil reinforcement shall be in accordance with the *Geotechnical Design Manual* Chapter 15.

D. Design of the Wall Panel

The wall panels shall be designed to resist the dynamic pressure distributions as defined in the *Geotechnical Design Manual* Chapter 15.

The wall panel shall have sufficient structural capacity to resist the maximum design rupture load for the wall reinforcement designed in accordance with the *Geotechnical Design Manual* Chapter 15.

The static load is not included because it is not located at the panel connection.

10.3.3 Precast Concrete Barrier

A. Concrete Barrier Type 2

"Concrete Barrier Type 2" (see Standard Plan C-8) may be used on bridges for median applications or for temporary traffic control based on the following guidelines:

1. For temporary applications, no anchorage is required if there is 2 feet or greater slide distance between the back of the traffic barrier and an object and 3 feet or greater to the edge of the bridge deck or a severe drop off (see *Design Manual* M 22-01).
2. For permanent applications in the median, no anchorage will be required if there is a 3 foot or greater slide distance between the traffic barrier and the traffic lane.
3. For temporary applications, the traffic barrier shall not be placed closer than 9 inches to the edge of a bridge deck or substantial drop-off and shall be anchored (see Standard Plans K-80.35 and K-80.37).
4. The traffic barrier shall not be used to retain soil that is sloped or greater than the barrier height or soil that supports a traffic surcharge.

B. Concrete Barrier Type 4 and Alternative Temporary Concrete Barrier

"Concrete Barrier Type 4 (see the Standard Plan C-8a), is not a free standing traffic barrier. This barrier shall be placed against a rigid vertical surface that is at least as tall as the traffic barrier. In addition, Alternative Temporary Concrete Barrier Type 4 – Narrow Base (Standard Plan K-80.30) shall be anchored to the bridge deck as shown in Standard Plan K-80.37. The "Concrete Barrier Type 4 and Alternative Temporary Concrete Barrier" are not designed for soil retention.

10.4 Bridge Traffic Barrier Rehabilitation

10.4.1 Policy

The bridge traffic barrier retrofit policy is: "to systematically improve or replace existing deficient rails within the limits of roadway resurfacing projects." This is accomplished by:

- Utilizing an approved crash tested rail system that is appropriate for the site or
- Designing a traffic barrier system to the strength requirements set forth by Section 2 of AASHTO *Standard Specifications for Highway Bridges, 17th edition*.

10.4.2 Guidelines

A strength and geometric review is required for all bridge rail rehabilitation projects. If the strength of the existing bridge rail is unable to resist a 10 kip barrier impact design load or has not been crash tested, then modifications or replacement will be required to improve its redirectional characteristics and strength. Bridges that have deficient bridge traffic barriers were designed to older codes.

The AASHTO LFD load of 10 kips shall be used in the retrofit of existing bridge traffic barrier systems constructed prior to the year 2000.

The use of the AASHTO LRFD criteria to design bridge traffic barrier rehabs will result in a bridge deck that has insufficient reinforcement to resist moment from a traffic barrier impact load and will increase the retrofit cost due to expensive deck modifications.

If the design of the bridge rehabilitation includes other bridge components that will be designed using AASHTO LRFD then the following minimum equivalent Extreme Event (CT) traffic barrier loading can be used:

Flexure = (1.3)*(1.67)*(10 kip) / (0.9) = 24.10 kip
Shear = (1.3)*(1.67)*(10 kip) / (0.85) = 25.54 kip

10.4.3 Design Criteria

Standard thrie beam guardrail post spacing is 6′-3″ except for the SL-1 Weak Post, which is at 8′-4″. Post spacing can be increased up to 10′-0″ if the thrie beam guardrail is nested (doubled up).

Gaps in the guardrail are not allowed because they produce snagging hazards. The exceptions to this are:

- Movable bridges at the expansion joints of the movable sections.
- At traffic gates and drop down net barriers.
- At stairways.

Design F guardrail end sections will be used at the approach and trailing end of these gaps.

For Bridge Traffic Barrier Rehabilitation the following information will be needed from the Region Design office:

- Bridge Site Data Rehabilitation Sheet – DOT Form 235-002A.
- Photos, preferably digital JPEG format.

- Layout with existing dimensions.
- Standard Plan thrie beam guardrail transitions (selected by Region Design office) to be used at each corner of the bridge (contact bridges and structures office for thrie beam height).
- Location of any existing utilities.
- Measurements of existing ACP to top of curb at the four corners, midpoints and the locations of minimum and maximum difference (five locations each side as a minimum).
- Diagram of the location of Type 3 anchors, if present, including a plan view with vertical and horizontal dimensions of the location of the Type 3 anchor connection relative to the intersecting point of the back of pavement seat with the curb line.
- The proposed overlay type, quantities of removal and placement.
- For timber bridges, the field measurement of the distance from the edge of bridge deck to the first and second stringer is required for mounting plate design.

Placement of the retrofit system will be determined from the *Design Manual* M 22-01. Exceptions to this are bridges with sidewalk strength problems, pedestrian access issues, or vehicle snagging problems.

10.4.4 WSDOT Bridge Inventory of Bridge Rails

The WSDOT Bridge Preservation Office maintains an inventory of all bridges in the state on the State of Washington Inventory of Bridges.

Concrete balusters are deficient for current lateral load capacity requirements. They have approximately 3 kips of capacity whereas 10 kips is required.

The combination high-base concrete parapet and metal rail may or may not be considered adequate depending upon the rail type. The metal rail Type R, S, and SB attached to the top of the high-base parapet are considered capable of resisting the required 5 kips of lateral load. Types 3, 1B, and 3A are considered inadequate. See the *Design Manual* M 22-01 for replacement criteria.

10.4.5 Available Retrofit Designs

A. Washington Thrie Beam Retrofit of Concrete Balusters

This system consists of thrie beam guardrail stiffening of existing concrete baluster rails with timber blockouts. The Southwest Research Institute conducted full-scale crash tests of this retrofit in 1987. Results of the tests were satisfactory and complied with criteria for a Test Level 2 (TL-2) category in the Guide Specifications. For complete details see Bridge Standard Drawing 10.4-A1-1.

B. New York Thrie Beam Guardrail

This crash tested rail system can be utilized at the top of a raised concrete sidewalk to separate pedestrian traffic from the vehicular traffic or can be mounted directly to the top of the concrete deck. For complete details see Thrie Beam Retrofit Concrete Curb in Appendix 10.4-A1-3.

C. Concrete Parapet Retrofit

This is similar to the New York system. For complete details see Appendix 10.4-A1-2.

D. SL-1 Weak Post

This design has been utilized on some short concrete spans and timber bridges. A failure mechanism is built into this rail system so that upon impact with a 10 kip load the post will break away from the mounting bracket. The thrie beam guardrail will contain the vehicle by virtue of its ribbon strength. To ensure minimal damage to the bridge deck and stringers, the breakaway connection may be modified for a lower impact load (2 kip minimum) with approval of the Bridge Design Engineer. For complete details, see Bridge Standard Drawing 10.4-A1-4.

10.4.6 Available Replacement Designs

A. Traffic Barrier – Shape F Retrofit

This is WSDOT's preferred replacement of deficient traffic barriers and parapets on high volume highways with a large truck percentage. All interstate highway bridges shall use this type of barrier unless special conditions apply. For complete details see Bridge Standard Drawing 10.4-A2.

10.5 Bridge Railing

10.5.1 Design

WSDOT pedestrian and bicycle/pedestrian railings are designed in accordance with Chapter 13 in the AASHTO LRFD. The AASHTO LRFD calls for a minimum of 42″ for bicycle railings whereas WSDOT requires a minimum height of 54″ on structures. The railings in Section 10.5.2 are not designed for vehicular impact loads assuming location is low speed, location is outside of Design Clear Zone as defined in the *Design Manual* Chapter 1600, or location has minimal safety consequence from collapse of railing. Railings for other locations shall be designed for vehicular impact loads in accordance with Chapter 13 and/or 15 in the AASHTO LRFD. Emergency and maintenance access shall be considered.

Pedestrian and bicycle railings shall be designed using a Live Load factor of 1.75.

Fall Protection railing shall meet the requirements of WAC 296-155-24609.

10.5.2 Railing Types

A. Bridge Railing Type Pedestrian

This pedestrian railing is designed to sit on top of the 32″ and 34″ traffic barriers and to meet pedestrian height requirements of 42″. For complete details see Bridge Standard Drawing 10.5-A1.

B. Bridge Railing Type BP and S-BP

These railings are designed to meet WSDOT's minimum bicycle height requirements of 54″, and sit on top of the 32″ and 34″ traffic barriers.

There are two versions—the BP and S-BP. The BP is the standard railing and is made out of aluminum. The S-BP is the steel version designed for use in rural areas because of aluminum theft. For complete details see Bridge Standard Drawing 10.5-A2 and 10.5-A3.

C. Pedestrian Railing

This railing is designed to sit on top of a six-inch curb on the exterior of a bridge sidewalk. It meets the bicycle height requirements of 54″. For complete details see Appendix 10.5-A4.

D. Bridge Railing Type Chain Link Snow Fence and Bridge Railing Type Snow Fence

This railing is designed to prevent large chunks of plowed snow from falling off the bridge on to traffic below. For complete details see Appendix 10.5-A5-1 through 10.5-A5-3.

E. Bridge Railing Type Chain Link Fence

This railing is designed to minimize the amount of objects falling off the bridge on to traffic below. For complete details see Appendix 10.5-A5-4.

10.6 Bridge Approach Slabs

Bridge approaches typically experience two types of settlement, global and local. Global settlement is consolidation of the deeper natural foundation soils. Local settlement is mainly compression of fill materials directly beneath the approach pavement due to construction. The combination of global and local settlements adjacent to the bridge end piers form the characteristic "bump" in the pavement at the bridge. The approach slab significantly reduces local settlement and will provide a transition to the long term roadway differential settlements. Generally, abutments with a deep foundation will have greater differential roadway settlements than spread footing foundations.

When Are Bridge Approach Slabs Required – Bridge approach slabs are required for all new and widened bridges, except when concurrence is reached between the Geotechnical Branch, the Region Design Project Engineer Office, and the Bridge and Structures Office, that approach slabs are not appropriate for a particular site. In accordance with *Design Manual* M 22-01, the State Geotechnical Engineer will include a recommendation in the geotechnical report for a bridge on whether or not bridge approach slabs should be used at the bridge site. Factors considered while evaluating the need for bridge approach slabs include the amount of expected settlement and the type of bridge structure.

Standard Plan A-40.50 – The Standard Plan A-40.50 is available for the Local Agencies (or others) to use or reference in a contract. Bridge and Structures Office designs will provide detailed information in a customized approach slab Plan View and show the approach slab length on the Bridge Layout Sheet.

Bridge Runoff – Bridge runoff at the abutments shall be carried off and collected at least 10 feet beyond the bridge approach slab. Drainage structures such as grate inlets and catch basins shall be located in accordance with Standard Plan B-95.40 and the recommendations of the Hydraulics Branch.

Approach Pay Item –All costs in connection with constructing bridge approach slabs are included in the unit contract price per square yard for "Bridge Approach Slab." The pay item includes steel reinforcing bars, approach slab anchors, concrete, and compression seals.

10.6.1 Notes to Region for Preliminary Plan

All bridge preliminary plans shall show approach slabs at the ends of the bridges. In the Notes to Region in the first submittal of the Preliminary Plan to the Region, the designer shall ask the following questions:

1. Bridge approach slabs are shown for this bridge, and will be included in the Bridge PS&E. Do you concur?
2. The approach ends of the bridge approach slabs are shown normal to the survey line (a) with or (b) without steps (the designer shall propose one alternative). Do you concur?
3. Please indicate the pavement type for the approach roadway.

Depending on the type and number of other roadway features present at the bridge site (such as approach curbs and barriers, drainage structures, sidewalks, utilities and conduit pipes) or special construction requirements such as staged construction, other questions in the Notes to Region pertaining to the bridge approach slabs may be appropriate.

Special staging conditions exist when the abutment skew is greater than 30° and for wide roadway widths. This includes bridge widenings with (or without) existing bridge approach slabs. The preliminary plan should include details showing how these conditions are being addressed for the bridge approach slabs, and the designer shall include appropriate questions in the Notes to Region asking for concurrence with the proposed design.

10.6.2 Bridge Approach Slab Design Criteria

The standard bridge approach slab design is based on the following criteria:

1. The bridge approach slab is designed as a slab in accordance with AASHTO LRFD. (Strength Limit State, IM = 1.33, no skew).
2. The support at the roadway end is assumed to be a uniform soil reaction with a bearing length that is approximately ⅓ the length of the approach slab, or 25′/3 = 8′.
3. The Effective Span Length (S_{eff}), regardless of approach length, is assumed to be: 25′ approach – 8′ = 17′
4. Longitudinal reinforcing bars do not require modification for skewed approaches up to 30 degrees or for slab lengths greater than 25′.
5. The approach slab is designed with a 2″ concrete cover to the bottom reinforcing.

10.6.3 Bridge Approach Slab Detailing

The bridge approach slab and length along center line of project shall be shown in the Plan View of the Bridge Layout sheet. The Bridge Plans will also include approach slab information as shown in Bridge Standard Drawings 10.6-A1-1, 10.6-A1-2, and 10.6-A1-3. The Approach Slab Plan sheets should be modified as appropriate to match the bridge site conditions. Approach slab Plan Views shall be customized for the specific project and all irrelevant details shall be removed.

Plan View dimensions shall define the plan area of the approach slab. The minimum dimension from the bridge is 25′. If there are skewed ends, then dimensions shall be provided for each side of the slab, or a skew angle and one side, in addition to the width. For slabs on a curve, the length along the project line and the width shall be shown.

Similar to Bridge Traffic Barrier detailing, approach slab steel detailing shall show size, spacing, and edge clearance. The number and total spaces can be determined by the contractor. If applicable, the traffic barrier AS1 and AS2 along with the extra top transverse bar in the slab shall be shown in the Plan View. AS1 bars shall be epoxy coated. Also remember that the spacing of the AS1 bars decreases near joints. When the skew is greater than 20 degrees, then AP8 bars shall be rotated at the acute corners of the bridge approach slab.

Bending diagrams shall be shown for all custom reinforcement. All Bridge Approach Slab sheets will have the AP2 and AP7 bars. If there is a traffic barrier, then AP8, AS1, and AS2 bars shall be shown.

Additional layout and details may be required to address special roadway features and construction requirements such as: roadway curbs and barriers, sidewalks, utilities and conduits and staging. This means, if sidewalks and interior barriers (such as traffic-pedestrian barriers) are present, special details will be required in the Bridge Plans to show how the sidewalks and interior barriers are connected to and constructed upon the bridge approach slab. If the bridge construction is staged, then the approach slabs will also require staged construction.

10.6.4 Skewed Bridge Approach Slabs

For all skewed abutments, the roadway end of the bridge approach slab shall be normal to the roadway centerline. The Bridge Design Engineer shall be consulted when approach slab skew is greater than 30 degrees. Skews greater than 20 degrees require analysis to verify the bottom mat reinforcement, and may require expansion joint modifications.

The roadway end of the approach may be stepped to reduce the size or to accommodate staging construction widths. A general rule of thumb is that if the approach slab area can be reduced by 50 SY or more, then the slab shall be stepped. At no point shall the roadway end of the approach slab be closer than 25′ to the bridge. These criteria apply to both new and existing bridge approach slabs. If stepped, the design shall provide the absolute minimum number of steps and the longitudinal construction joint shall be located on a lane line. See Figure 10.6.4-1 for clarification.

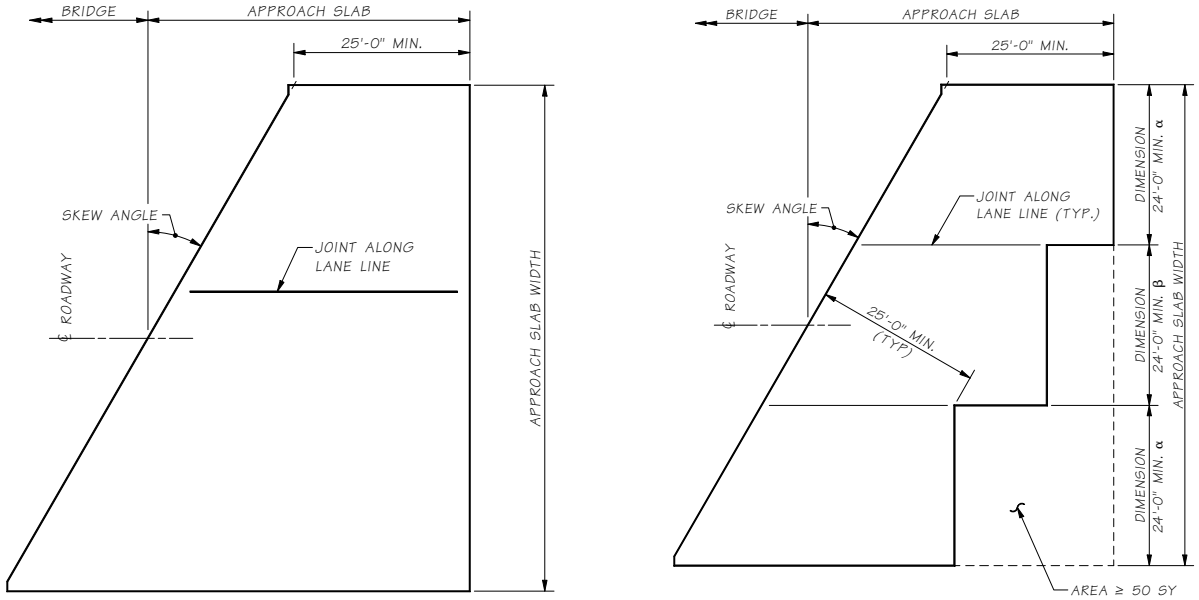

Skewed Approach ~ Typical **Skewed Approach ~ Stepped**

α - DIMENSION MAY BE ONE LANE WIDTH PLUS THE SHOULDER WIDTH IF THE SHOULDER ≥ 8'-0".

β - DIMENSION MAY BE TWO LANE WIDTHS.

Skewed Approach
Figure 10.6.4-1

In addition, for bridges with traffic barriers and skews greater than 20 degrees, the AP8 bars shall be rotated in the acute corners of the bridge approach slabs. Typical placement is shown in the flared corner steel detail, Figure 10.6.4-2.

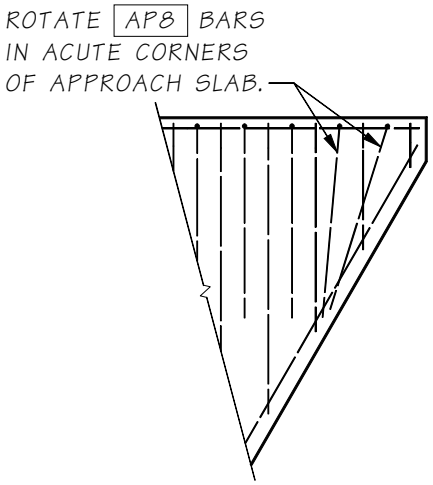

Flared Corner Steel
Figure 10.6.4-2

10.6.5 Approach Anchors and Expansion Joints

For semi-integral abutments or stub abutments, the joint design shall be checked to ensure the available movement of the standard joint is not exceeded. In general, the approach slab is assumed to be stationary and the joint gap is designed to vary with the bridge movement. Approach Slab Sheets 10-A1-3 and Standard Plan A-40.50 detail a typical 2½″ compression seal. For approach slabs with barrier, the compression seal shall extend into the barrier.

Approach slab anchors installed at bridge abutments shall be as shown in the Bridge Plans. For bridges with semi-integral type abutments, this can be accomplished by showing the approach slab anchors in the End Diaphragm or Pavement Seat details.

L Type Abutments – L type abutments do not require expansion joints or approach anchors because the abutment and bridge approach slab are both considered stationary. A pinned connection is preferred. The L type abutment anchor detail, as shown sign in Figure 10.6.5-1, shall be added to the abutment plan sheets. The pinned anchor for bridges with L type abutments shall be a #5 bar at one foot spacing, bent as shown, with 1′-0″ embedment into both the pier and the bridge approach slab. This bar shall be included in the bar list for the bridge substructure.

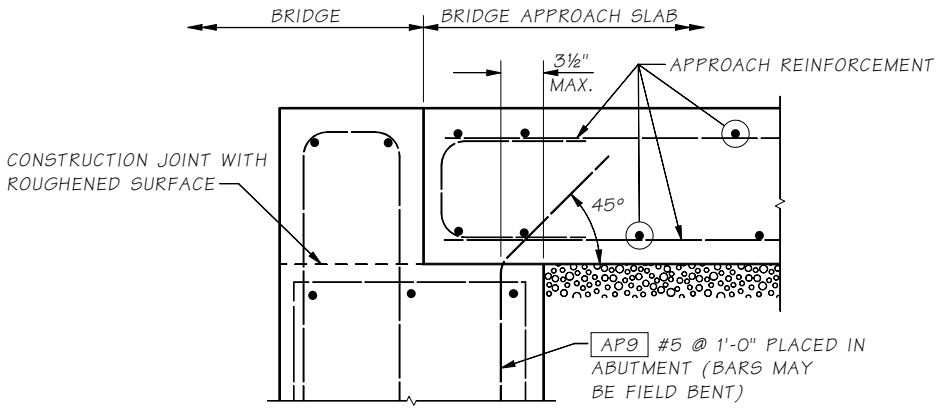

L Type Abutment Anchor Detail
Figure 10.6.5-1

10.6.6 Bridge Approach Slab Addition or Retrofit to Existing Bridges

When bridge approach slabs are to be added or replaced on existing bridges, modification may be required to the pavement seats. Either the new bridge approach slab will be pinned to the existing pavement seat, or attached with approach anchors with a widened pavement seat. Pinning is a beneficial option when applicable as it reduces the construction cost and time.

The pinning option is only allowed on semi-integral abutments as a bridge approach slab addition or retrofit to an existing bridge. Figure 10.6.6-1 shows the pinning detail. As this detail eliminates the expansion joint between the bridge approach slab and the bridge, the maximum bridge superstructure length is limited to 150′. The Bridge Design Engineer may modify this requirement on a case by case basis. Additionally, if the roadway end of the bridge approach slab is adjacent to PCCP roadway, then the detail shown in Figure 10.6.6-2 applies. PCCP does not allow for as much movement as HMA and a joint is required to reduce the possibility of buckling.

When pinning is not applicable, then the bridge approach slab shall be attached to the bridge with approach anchors. If the existing pavement seat is less than 10 inches, the seat shall be modified to provide an acceptable, wider pavement seat. The Bridge Design Engineer may modify this requirement on a site-specific basis. Generic pavement seat repair details are shown in Appendix 10.6-A2-1 for a concrete repair and Appendix 10.6-A2-2 for a steel T-section repair. These sheets can be customized for the project and added to the Bridge Plans.

When a bridge approach slab is added to an existing bridge, the final grade of the bridge approach slab concrete shall match the existing grade of the concrete bridge deck, including bridges with asphalt pavement. The existing depth of asphalt on the bridge shall be shown in the Plans and an equal depth of asphalt placed on a new bridge approach slab. If the existing depth of asphalt is increased or decreased, the final grade shall also be shown on the Plans.

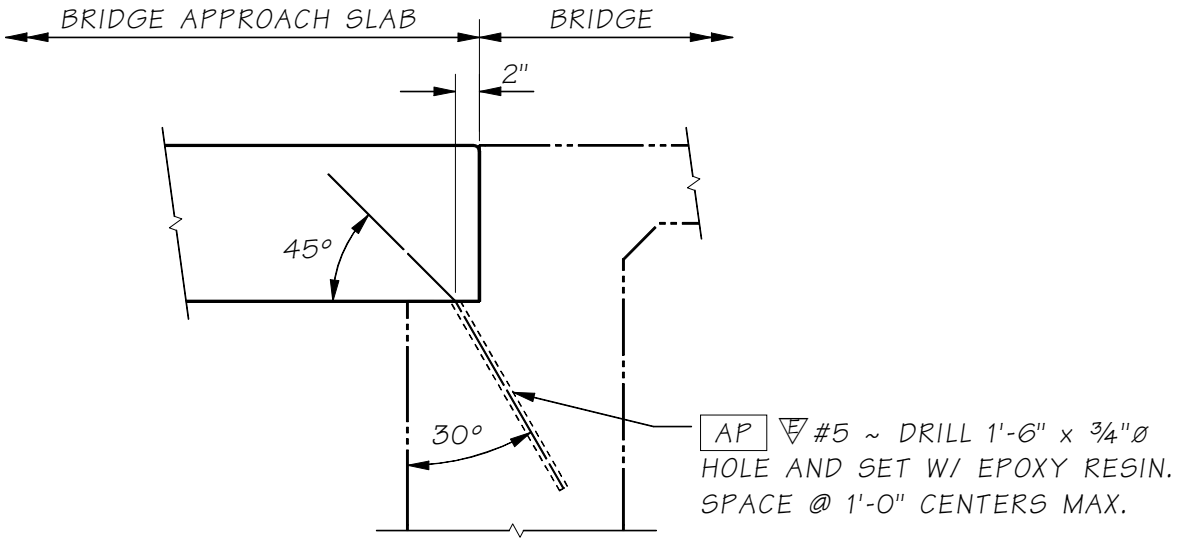

Pinned Approach Slab Detail
Figure 10.6.6-1

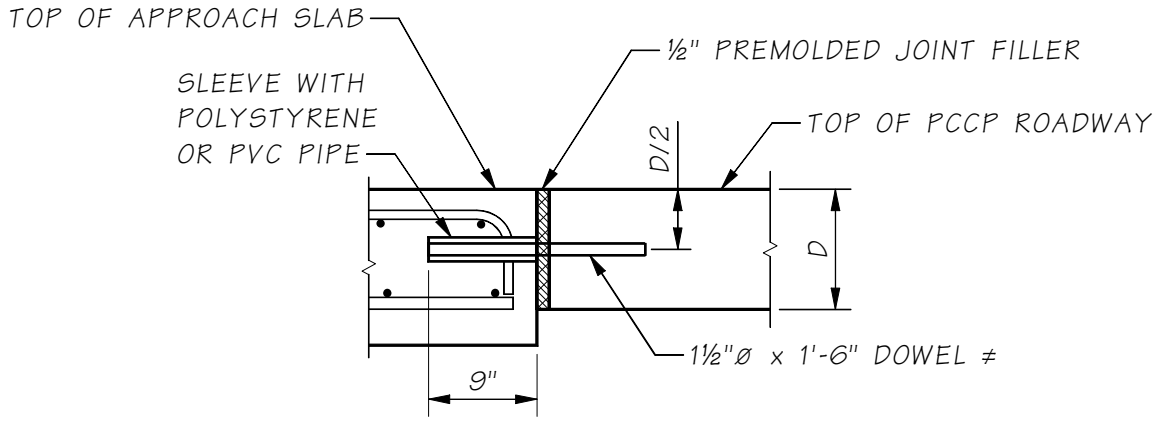

INSERT DOWELS PARALLEL TO CENTER LINE
ALONG TRANSVERSE CONSTRUCTION JOINT.

≠ DRILL 1¾"Ø HOLE AND SET WITH EPOXY RESIN
IF PLACED INTO EXISTING PCCP ROADWAY.

PCCP Roadway Dowel Bar Detail
Figure 10.6.6-2

10.6.7 Bridge Approach Slab Staging

Staging plans will most likely be required when adding or retrofitting approach slabs on existing bridges. The staging plans shall be a part of the bridge plans and shall be on their own sheet. Coordination with the Region is required to ensure agreement between the bridge staging sheet and the Region traffic control sheet. The longitudinal construction joints required for staging shall be located on lane lines. As there may not be enough room to allow for a lap splice in the bottom transverse bars, a mechanical splice option shall be added. If a lap splice is not feasible, then only the mechanical splice option shall be given. See Figure 10.6.6-3.

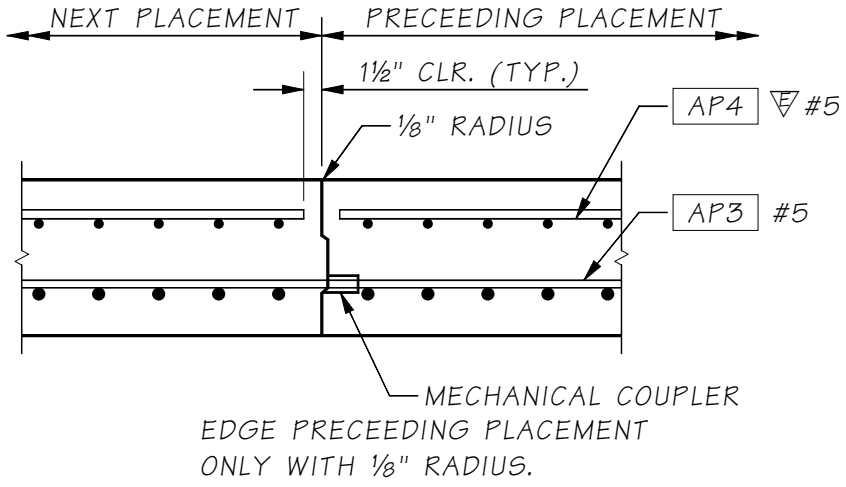

Alternate Longitudinal Joint Detail
Figure 10.6.6-3

10.7 Traffic Barrier on Bridge Approach Slabs

Placing the traffic barrier on the bridge approach slab is beneficial for the following reasons.

- The bridge approach slab resists traffic impact loads and may reduce wing wall thickness
- Simplified construction and conduit placement
- Bridge runoff is diverted away from the abutment

Most bridges will have some long-term differential settlement between the approach roadway and the abutment. Therefore, a gap between the bridge approach slab and wing (or wall) shall be shown in the details. The minimum gap is twice the long-term settlement, or 2 inches as shown in Figure 10.7-1. A 3 inch gap is also acceptable.

When the traffic barrier is placed on the bridge approach slab, the following barrier guidelines apply.

- Barrier shall extend to the end of the bridge approach slab
- Conduit deflection or expansion fittings shall be called out at the joints
- Junction box locations shall start and end in the approach
- The top transverse reinforcing in the slab shall be sufficient to resist a traffic barrier impact load. A 6′-0″ (hooked) #6 epoxy coated bar shall be added to the approach slab as shown in Figure 10.7-1.

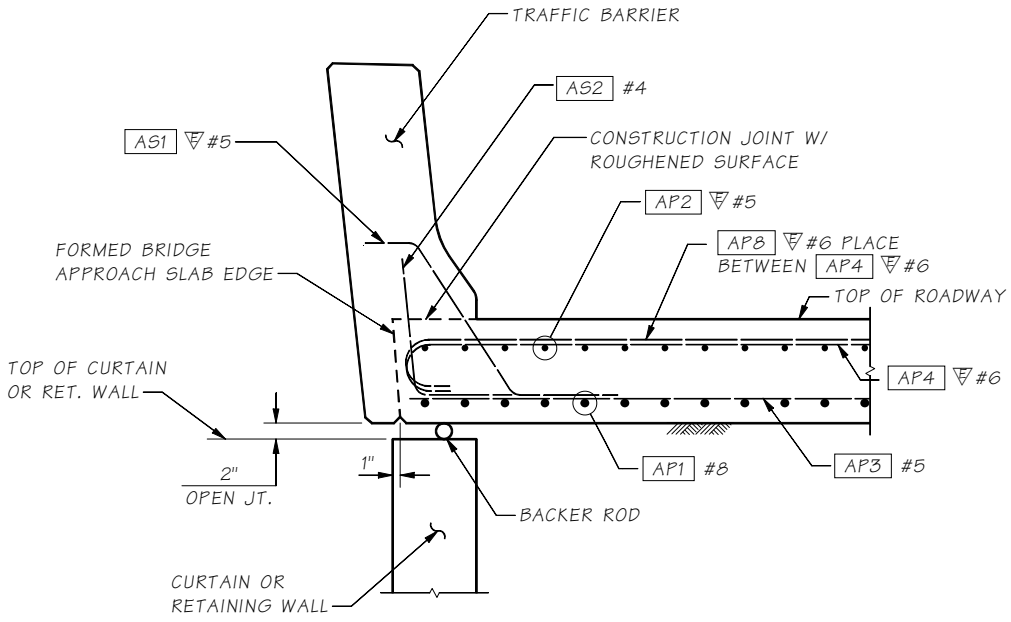

Figure 10.7-1

10.7.1 Bridge Approach Slab over Wing Walls, Cantilever Walls or Geosynthetic Walls

All walls that are cast-in-place below the bridge approach slab should continue the barrier soffit line to grade. This includes geosynthetic walls that have a cast-in-place fascia. Figure 10.7.1-1 shows a generic layout at an abutment. Note the sectional Gap Detail, Figure 10.7-1 applies.

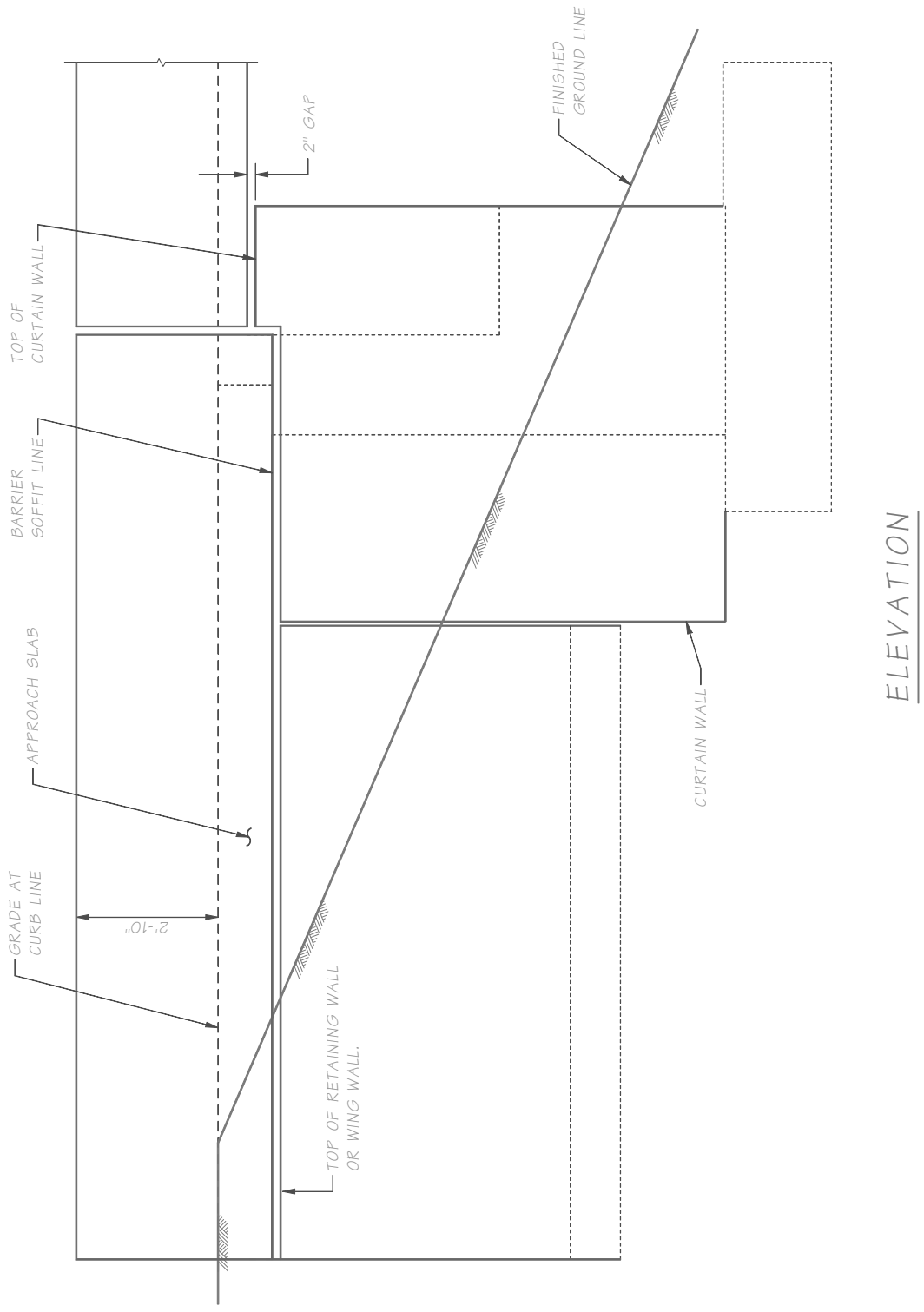

Figure 10.7.1-1

10.7.2 Bridge Approach Slab over SE Walls

The tops of structure earth (SE) walls are uneven and shall be covered with a fascia to provide a smooth soffit line. Usually SE walls extend well beyond the end of the approach slab and require a moment slab. Since SEW barrier is typically 5′-0″ deep from the top of the barrier, the soffit of the SEW barrier and bridge barrier do not match. The transition point for the soffit line shall be at the bridge expansion joint as shown in Figure 10.7.2-2. This requires an extended back side of the barrier at the approach slab to cover the uneven top of the SE wall.

Battered wall systems, such as block walls, use a thickened section of the curtain wall to hide some of the batter. The State Bridge and Structures Architect will provide dimensions for this transition when required.

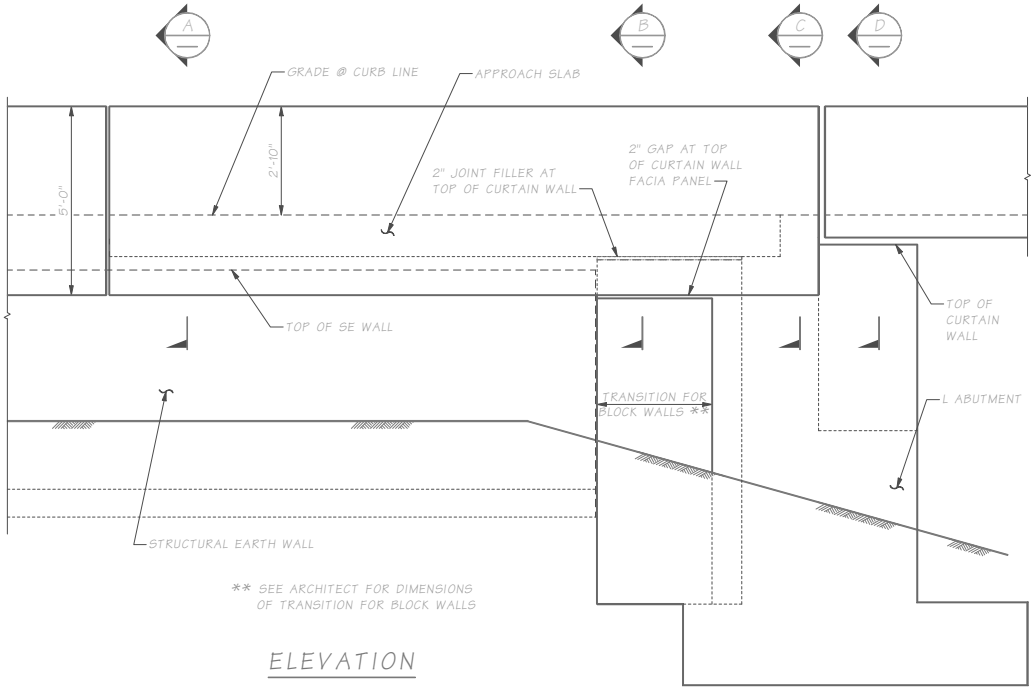

Figure 10.7.2-1

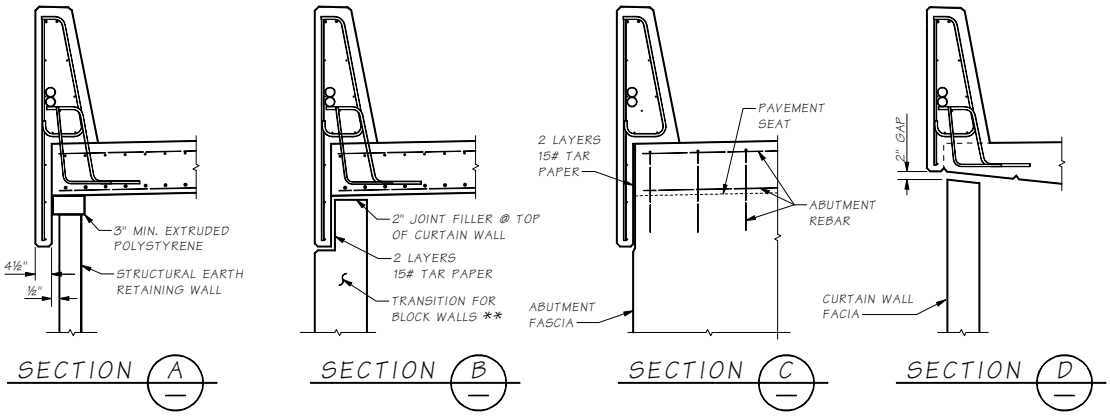

Figure 10.7.2-2

10.8 Utilities Installed with New Construction

10.8.1 General Concepts

The utilities included under this section are those described in *Standard Specifications* Section 6-01.10. The Bridge designer shall determine if the utility may be attached to the structure and the location. Bridge plans shall include all hardware specifications and details for the utility attachment as provided in any written correspondence with the utility and the utility agreement coordinated by the WSDOT Region Utility Engineer with the associated utility.

Responsibilities of the Utility Company – The Region or utility company will initiate utility installations and provide design information. The utility company shall be responsible for calculating design stresses in the utility and design of the support system. Utility support design calculations with a State of Washington Professional Engineer stamp, signed and dated, shall be submitted to the Bridge and Structures Office for review. The following information shall be provided by the utility company and shown in the final Bridge Plans.

- Location of the utility outside the limits of the bridge structure
- Number of utilities, type, size, and weight (or Class) of utility lines
- Utility minimum bending radius for the conduit or pipeline specified

Utility General Notes and Design Criteria are stated in Form 224-047. See Figure 10.8.1-1. This form outlines most of the general information required by the utility company to design their attachments. The Bridge Office will generally provide the design for lightweight hanger systems, such as electrical conduits, attached to new structures.

Confined Spaces – A confined space is any place having a limited means of exit that is subject to the accumulation of toxic or flammable contaminants or an oxygen deficient environment. Confined spaces include but are not limited to pontoons, box girder bridges, storage tanks, ventilation or exhaust ducts, utility vaults, tunnels, pipelines, and open-topped spaces more than 4 feet in depth such as pits, tubes, vaults, and vessels.

Coating and Corrosion Protection – When the bridge is to receive pigmented sealer, consideration shall be given to painting any exposed utility lines and hangers to match the bridge. When a pigmented sealer is not required, steel utility conduits and hangers shall be painted or galvanized for corrosion protection. The special provisions shall specify cleaning and painting procedures.

Washington State Department of Transportation

General Notes and Design Criteria for Utility Installations to Existing Bridges

General Notes

All materials and workmanship shall be in accordance with the requirements of the state of Washington, Department of Transportation, Standard Specifications for Road, Bridge, and Municipal Construction, current edition. The utility conduits shall be labeled in accordance with Section 6-01.10.

All steel in utility supports, including fastenings and anchorages, shall be galvanized in accordance with AASHTO M-111 or M-232 (ASTM A-123 or A-153 respectively).

All utilities and utility support surfaces, including any galvanized utilities, shall be given a primer coat of state standard formula A-6-86 and two coats of state standard formula C-9-86. The final coat shall match the bridge color.

Galvanized metal or aluminum utilities completely hidden from public view may be exempted from the above painting requirements.

Any painted surfaces damaged during construction shall be cleaned and painted as noted above.

Any paint splatters shall be removed from the bridge.

Appearance of the utility installation shall be given serious consideration in all cases. Where possible, the utility installation shall be hidden from public view.

The notes and criteria explained here are presented as a guide only. Each proposed utility installation shall be submitted to the Department of Transportation for approval on an individual basis. Compliance with these criteria does not assure approval, nor does variance from these criteria, for reasonable cause, necessarily exclude approval.

Design Criteria

1. Pipelines carrying volatile fluids through a bridge superstructure shall be designed by the utility company in accordance with WAC 480-93, Gas Companies - Safety, and Minimum Federal Safety Standard, Title 49 Code of Federal Regulations (CFR) Section part 192. WAC 468-34-210, Pipelines - Encasement, describes when casing is required for carrying volatile fluids across structures. Generally, casing is not required for pipelines conveying natural gas per the requirements of WAC 468-34-210. If casing is required, then WAC 468-34-210 and WAC 480-93-115 shall be followed.
2. Utilities shall not be attached above the bridge deck nor attached to railing or rail posts.
3. Utilities shall not extend below bottom of superstructure.

Exhibit " _____ "

Permit/Franchise _____

DOT Form 224-047 EF
Revised 5/10

Page _____ of _____

General Notes and Design Criteria for Utility Installations to Existing Bridges
WSDOT Form 224-047
Figure 10.8.1-1

4. The utilities shall be provided with suitable expansion devices near bridge expansion joints and/or other locations as required to prevent temperature and other longitudinal forces from being transferred to bridge members.
5. Rigid conduit shall extend 10 feet (3 meters) minimum, beyond the end of the bridge abutment.
6. Utility supports shall be designed such that neither the conduit, the supports, nor the bridge members are overstressed by any loads imposed by the utility installation.
7. Utility locations and supports shall be designed so that a failure (rupture, etc.) will not result in damage to the bridge, the surrounding area, or be a hazard to traffic.
8. Conduit shall be rigid.

(Items 1 through 8 may be cross-referenced with Bridge Design Manual, Utilities Section.)

9. Lag screws may be used for attaching brackets to wooden structures. All bolt holes shall meet the requirements of Sections 6-04.3(4) and 6-04.3(5) of the Washington State Department of Transportation Standard Specifications for Road, Bridge, and Municipal Construction, current edition.
10. Welding across main members will not be permitted. All welding must be approved.
11. Utilities shall be located to minimize bridge maintenance and bridge inspection problems.
12. Attach conduits or brackets to the concrete superstructure with resin bond anchors. Lag screws shall not be used for attachment to concrete.
13. Drilling through reinforcing steel will not be permitted. If steel is hit when drilling, the anchorage location must be moved and the abandoned hole filled with nonshrink grout conforming to the requirements of Section 9-20.3(2) and placement shall be as required in Section 6-02.3(20) of the Washington State Department of Transportation Standard Specifications for Road, Bridge, and Municipal Construction, current edition.
14. There shall be a minimum of 3 inches (80 millimeters) edge distance to the center line of bolt holes in concrete.
15. All utilities and utility supports shall be designed not only to support their dead load but to resist other forces from the utility (surge, etc.) and wind and earthquake forces. The utility company may be asked to submit one set of calculations to verify their design forces.
16. Drilling into prestressed concrete members for utility attachments shall not be allowed.
17. Water or sewer lines to be placed lower than adjacent bridge footings shall be encased if failure can cause undermining of the footing.

Exhibit " _____ "

Permit/Franchise _____

DOT Form 224-047 EF
Revised 5/10

Page _____ of _____

General Notes and Design Criteria for Utility Installations to Existing Bridges (continued)
WSDOT Form 224-047
Figure 10.8.1-1

10.8.2 Utility Design Criteria

All utilities shall be designed to resist Strength and Extreme Event Limits States. This includes and is not limited to dead load, expansion, surge, and earthquake forces. Designers shall review WSDOT Form 224-047 "*General Notes and Design Criteria for Utility Installations to Existing Bridges*" and the items in this section when designing a utility system or providing a review for an existing bridge attachment. See Figure 10.8.1-1.

The Bridge Engineer shall review the utility design to ensure the utility support system will carry all transverse and vertical loading. Loading will include (and is not limited to): dead load, temperature expansion, dynamic action (water hammer), and seismic inertial load. Positive resistance to loads shall be provided in all directions perpendicular to and along the length of the utility as required by the utility engineer.

Where possible, dynamic fluid action loads shall be resisted off of the bridge. If these loads must be resisted on the bridge, the utility engineer shall be involved in the design of these supports. The utility engineer shall determine these design forces being applied to the bridge. Realize these forces can be generated in any pipe supporting moving fluids, which may include, but are not limited to: water, sewer, and storm water.

Where utilities are insulated, the insulation system shall be designed to allow the intended motion range of the hardware supporting the utility. This will prevent unanticipated stresses from being added to the hanger in the event the insulation binds up the hardware.

Utility Location – Utilities shall be located, such that a support failure will not result in damage to the bridge, the surrounding area, or be a hazard to traffic. In most cases, the utility shall be installed between girders. Utilities and supports shall not extend below the bottom of the superstructure. Utilities shall be installed no lower than 1 foot 0 inches above the bottom of the girders. In some cases when appurtenances are required (such as air release valves), care shall be taken to provide adequate space. The utility installation shall be located so as to minimize the effect on the appearance of the structure. Utilities shall not be attached above the bridge deck nor attached to the railings or posts.

Termination at the Bridge Ends – Utility conduit and encasements shall extend 10 feet minimum beyond the ends of the structure in order to reduce effects of embankment settlement on the utility and provide protection in case of future work involving excavation near the structure. This requirement shall be shown on the plans. Utilities off the bridge must be installed prior to paving of approaches. This should be stated in the Special Provisions.

Utility Expansion – The utilities shall be designed with a suitable expansion system as required to prevent longitudinal forces from being transferred to bridge members.

Water mains generally remain a constant temperature and are anchored in the ground at the abutments. However, the bridge will move with temperature changes and seismic forces. Pipe support systems shall be designed to allow for the bridge movements. For short bridges, this generally means the bridge will move and the utility will not since it is anchored at the abutments. For long bridges that require pipe expansion joints, design shall carefully locate pipe expansion joints and the corresponding longitudinal load-carrying support.

Electrical conduits that use PVC shall have an expansion device for every 100 foot of pipe due to the higher coefficient of expansion. If more than two joints are specified, a cable or expansion limiting device is required to keep the ends from separating.

Utility Blockouts – Blockouts shall be provided in all structural members that prohibit the passage of utilities, such as girder end diaphragms, pier crossbeams, and intermediate diaphragms. These blockouts shall be large enough to fit deflection fittings, and shall be parallel to the utility. For multiple utilities, a note shall be added to the plans that the deflection fittings shall be staggered such that no fitting is located adjacent to another, or the blockouts shall be designed to fit both fittings. Expansion fittings shall be staggered.

Gas Lines or Volatile Fluids – Pipelines carrying volatile fluids through a bridge superstructure shall be designed by the utility company in accordance with WAC 480-93, Gas Companies—Safety, and Minimum Federal Safety Standard, Title 49 Code of Federal Regulations (CFR) Section part 192. WAC 468-34-210, Pipelines—Encasement, describes when casing is required for carrying volatile fluids across structures. Generally, casing is not required for pipelines conveying natural gas per the requirements of WAC 468-34-210. If casing is required, then WAC 468-34-210 and WAC 480-93-115 shall be followed.

Water Lines – Transverse support or bracing shall be provided for all water lines to carry Strength and Extreme Event Lateral Loading. Fire control piping is a special case where unusual care must be taken to handle the inertial loads and associated deflections. The Utility Engineer shall be involved in the design of supports resisting dynamic action loads and deflections.

In box girders (closed cell), a rupture of a water line will generally flood a cell before emergency response can shut down the water main. This shall be designed for as an Extreme Event II load case, where the weight of water is a dead load (DC). Additional weep holes or open grating shall be considered to offset this Extreme Event (see Figure 10.8.3-1). Full length casing extending 10-feet beyond the end of the bridge approach slab shall be considered as an alternate to additional weep holes or open grating.

Sewer Lines – Normally, an appropriate encasement pipe is required for sewer lines on bridges. Sewer lines shall meet the same design criteria as waterlines. See the utility agreement or the Hydraulic Section for types of sewer pipe material typically used.

Electrical (Power and Communications) – Telephone, television cable, and power conduit shall be galvanized Rigid Metal Conduit (RGS) or Rigid Polyvinyl Chloride Conduit (PVC). Where such conduit is buried in concrete curbs or barriers or has continuous support, such support is considered to be adequate. Where hangers or brackets support conduit at intervals, the maximum distance between supports shall be 5 feet.

10.8.3 Box/Tub Girder Bridges

Utilities shall not be placed inside reinforced concrete box girders less than 4 feet inside clear height and all precast prestressed concrete tub girders because reasonable access cannot be provided. Utilities shall be located between girders or under bridge deck soffit in these cases. Inspection lighting, access and ventilation shall always be provided in girder cells containing utilities. Refer to the concrete and steel chapters for additional details.

Continuous Support and Concrete Pedestals – Special utilities (such as water or gas mains) in box girder bridges shall use concrete pedestals. This allows the utility to be placed, inspected, and tested before the deck is cast. Concrete pedestals consist of concrete supports formed at suitable intervals and provided with some type of clamping device. Continuous supports shall be avoided due to the very high cost and additional dead load to the structure.

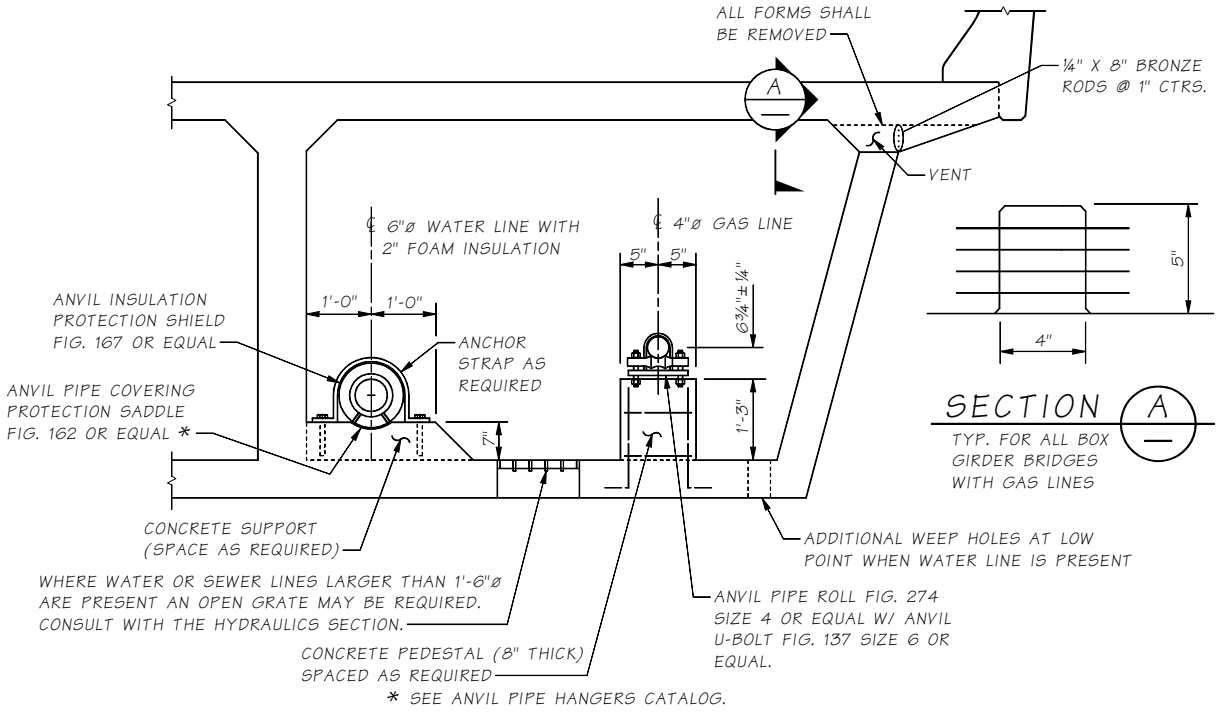

Concrete Utility Supports
Figure 10.8.3-1

10.8.4 Traffic Barrier Conduit

All new bridge construction shall install two 2-inch galvanized Rigid Metal Conduit (RGS) or Rigid Polyvinyl Chloride Conduit (PVC) in the traffic barriers. These conduits generally carry wiring for Traffic Signals (TS) and Lighting (LT). Other wiring may be installed or the conduit may be used for future applications. PVC conduit may be used only in stationary-form barriers, and will connect to RGS using a PVC adaptor when exiting the barrier. RGS conduit may be used in stationary-form barriers, but it shall be used in slipform barriers.

Each conduit shall be stubbed-out into its own concrete junction box at each corner of the bridge. The Bridge Plans must show the placement of the conduits to clear the structure or any foreseeable obstructions.

The galvanized steel conduit shall be wrapped with corrosion resistant tape at least one foot inside and outside of the concrete structure, and this requirement shall be so stated on the plans. The corrosion resistant tape shall be 3M Scotch 50, Bishop 5, Nashua AVI 10, or approved equal. The usual location of the conduit throughout the remainder of the bridge should be in the traffic barrier.

Pull boxes shall be provided within the barrier for each conduit at each end of the bridge and at a maximum spacing of 180 feet. For fiber optics only, spacing shall not exceed 360 feet. The pull box size shall conform to the specifications of the National Electric Code or be a minimum of 8 inches by 8 inches by 18 inches to facilitate pulling of wires. Galvanized steel pull boxes (or junctions boxes) shall meet the specifications of the "NEMA Type 4X" standard for stationary-form barrier, shall meet the specifications of the "NEMA 3R" and be adjustable in depth for slip form barrier, and the NEMA junction box type shall be stated on the plans. Stainless steel pull boxes may be used as an option to the galvanized steel.

In the case of existing bridges, an area 2 feet in width shall be reserved for conduit beginning at a point either 4 feet or 6 feet outside the face of usable shoulder. The fastening for and location of attaching the conduit to the existing bridge shall be worked out on a job-by-job basis.

10.8.5 Conduit Types

All electrical conduits shall be galvanized Rigid Metal Conduit (RGS) or Rigid Polyvinyl Chloride Conduit (PVC).

Steel Pipe – All pipe and fittings shall be galvanized except for special uses.

PVC Pipe – PVC pipe may be used with suitable considerations for deflection, placement of expansion fittings, and of freezing water within the conduits. PVC pipe shall not be placed in concrete traffic barriers when the slip form method is used due to damage and pipe separation that often occurs during concrete placement.

10.8.6 Utility Supports

The following types of supports are generally used for various utilities. Selection of a particular support type shall be based on the needs of the installation and the best economy. All utility installations shall address temperature expansion in the design of the system or expansion devices.

Utility supports shall be designed so that a failure will not result in damage to the bridge, the surrounding area, or be a hazard to traffic. Utility supports shall be designed so that any loads imposed by the utility installation do not overstress the conduit, supports, bridge structure, or bridge members.

Designs shall provide longitudinal and transverse support for loads from gravity, earthquakes, temperature, inertia, etc. It is especially important to provide transverse and longitudinal support for inserts that cannot resist moment.

The Bridge Engineer shall request calculations from the utility company for any attachment detail that may be questionable. Utility attachments, which exert moments or large forces at the supports, shall be accompanied by at least one set of calculations from the utility company. Bridge attachments designed to resist surge forces shall always be accompanied by calculations.

Concrete Embedment – This is the best structural support condition and offers maximum protection to the utility. Its cost may be high for larger conduit and the conduit cannot be replaced.

Pipe Hangers – Utility lines shall be suspended by means of cast-in-place inserts, whenever possible. This is the most common type of support for utilities to be hung under the bridge deck. This allows the use of standard cast-in-place inserts and is very flexible in terms of expansion requirements. For heavy pipes over traffic (10″ water main or larger), a Safety Factor of 1.5 should be used to resist vertical loads for Strength Design. This is to avoid complete failure of the utility hanger system by failure of one hanger. Vertical inserts will not provide resistance to longitudinal forces. Longitudinal and transverse supports shall be provided for ITS conduits. Vertical supports shall be spaced at 5 foot maximum intervals for telephone and power conduits, and at a spacing to resist design loads for all other utilities.

When 3/4″ or 7/8″ diameter hanger rods are suspended from cast-in-place inserts, at least three of the following inserts shall be identified: Cooper B-Line B22-I Series, Unistrut 3200 Series, Powerstrut 349 Series, Halfen HT5506 or similar. The specific cast-in-place insert within each series shall be identified based on the required length of insert. The cast-in-place insert shall be at least 6″ long and hot dipped galvanized in accordance with AASHTO M 111 or AASHTO M 232.

The insert shall not interfere with reinforcement in the bridge deck. The inserts shall be installed level longitudinally and transversely. When the superelevation of the roadway is not significant, a single, long insert may be used to support multiple hanger rods. When the superelevation becomes significant, a single insert may be used for each hanger.

Occasionally large diameter utilities require pipe rolls that only fit on 1″ diameter hanger rods. When 1″ diameter hanger rods are required, the Anvil Fig. 286 and Unistrut P3246 insert shall be used. The designer shall only specify this insert when absolutely necessary.

The Bridge Engineer shall verify that the cast-in-place insert has sufficient capacity to support the loads from the hanger rod.

Transverse supports may be provided by a second hanger extending from a girder or by a brace against the girder. The Bridge Standard Drawing 10.8-A1-1 and 10.8-A1-2 depict typical utility support installations and placement at abutments and diaphragms. Transverse supports shall, at a minimum, be located at every other vertical support.

10.9 Utility Review Procedure for Installation on Existing Bridges

It is the responsibility of the Region Utilities Engineer to forward any proposed attachments to existing bridges to the Bridge Preservation Office. The Bridge Preservation Office is responsible for reviewing only those details pertaining to the bridge crossing such as attachment details or trenching details adjacent to bridge piers or abutments.

The Bridge Preservation Office reviews proposed utility attachments and either approves the attachment or returns for correction (RFC). A current file for most utility attachments is maintained in the Bridge Preservation Office. The turnaround time for reviewing the proposals should not exceed four weeks.

The Region determines the number of copies to be returned. Most Regions send five copies of the proposed utility attachment. If the proposal is approved, Bridge Preservation will file one copy in the utility file and return four marked copies. If it has been returned for correction or not approved, one copy is placed in the utility file and two marked copies are returned, thru the Region, to the utility. See Section 10.9.1, "*Utility Review Checklist*."

Utility attachments, which exert moments or large forces at the supports, shall be accompanied by at least one set of calculations from the utility company. Bridge attachments designed to resist surge forces shall always be accompanied by calculations. The connection details shall be designed to successfully transfer all forces to the bridge without causing overstress in the connections or to the bridge members to which they are attached. For large utilities, the bridge itself shall have adequate capacity to carry the utility without affecting the live load capacity.

The engineer may request calculations from the utility company for any attachment detail that may be questionable. All plans, details, and calculations shall be stamped, signed, and dated by a Professional Engineer licensed in the State of Washington. Additionally, for heavier utilities, such as waterlines or sewer lines, the engineer may request a load rating of the structure, which shall be stamped, signed, and dated by a licensed professional engineer in the state of Washington to follow the guidelines of Chapter 13. The ratings shall be based solely on the engineer of record calculations.

Guidelines for Utility Companies

Detailing guidelines for utility companies to follow when designing utility attachments are listed in WSDOT Form 224-047, "*General Notes and Design Criteria for Utility Installations to Existing Bridges*." See Figure 10.8.1-1. See Section 10.8 for other requirements, which include, but are not limited to: design of utility, material used, and spacing of supports.

Water lines and sewer lines installed within box girders shall have full length casing extending 10-feet beyond the end of the bridge approach slab. The casing shall be sufficient to prevent the flooding of a cell upon a utility line rupture.

Guidelines for Column Attachments

The following guidelines shall be followed for installing attachments to columns.

- Attachments on round columns may be either drilled and bolted or banded.
- Attachments on non-circular column shapes shall be drilled and bolted.
- Only percussion drilling methods shall be allowed on bridge columns, and only for small diameter resin bonded anchor installation (0.50″ diameter max.). Drilling will normally result in blind holes, and these holes shall be patched with material conforming to *Standard Specifications* Section 6-02.3(20).
- Drilling into prestressed or post-tensioned concrete elements is not permitted. Some WSDOT bridges utilize prestressed columns.

Any proposed conduit installation on a WSDOT bridge structure shall be reviewed and approved by the Risk Reduction Engineer in the Bridge Preservation Office. If the conduit installation originates via a change order, then the Headquarters Construction Office may provide approval, and shall inform the Risk Reduction Engineer of the decision.

10.9.1 Utility Review Checklist

This checklist applies to all proposed utility attachments to existing bridges.

1. Complete cursory check to become familiar with the proposal.
2. Determine location of existing utilities.
   a. Check Bridge Inspection Report for any existing utilities.
   b. Check Bridge Preservation's utility file for any existing utility permits or franchises and possible as-built plans.
   c. Any existing utilities on the same side of the structure as the proposed utility shall be shown on the proposal.
3. Review the following with all comments in red:
   a. Layout that includes dimension, directions, SR number and bridge number.
   b. Adequate spacing of supports.
   c. Adequate strength of supports as attached to the bridge (calculations may be necessary).
   d. Maximum design pressure and regular operating pressure for pressure pipe systems.
   e. Adequate lateral bracing and thrust protection for pressure pipe systems.
   f. Does the utility obstruct maintenance or accessibility to key bridge components?
   g. Check location (elevation and plan view) of the utility with respect to pier footings or abutments. If trench limits encroach within the 45° envelope from the footing edge, consult the Materials Lab.
   h. Force mains or water flow systems may require encasement if they are in excavations below the bottom of a footing.

4. Write a letter of reply or email to the Region so a copy will be returned to you indicating the package has been accepted and sent out.
5. Stamp and date the plans using the same date as shown on the letter of reply or email.
6. Create a file folder with the following information:
    a. Bridge no., name, utility company or utility type, and franchise or permit number.
    b. One set of approved plans and possibly one or two pages of the original design plans if necessary for quick future reference. Previous transmittals and plans not approved or returned to correction should be discarded to avoid unnecessary clutter of the files.
    c. Include the letter of submittal and a copy of the letter of reply or email after it has been accepted.
7. Give the complete package to the Design Unit Manager for review and place the folder in the utility file after the review.

10.10 Drilled Anchors For Permanent Attachments

WSDOT allows conventional drilled anchors systems (resin bonded anchors and undercut anchors) for permanent attachments in many aspects of bridge design, including the permanent cyclical or sustained tension applications listed below.

- Sign structures mounted to the sides of bridges with a maximum cantilever length or total span of 10 feet.
- Light standards with a maximum cantilever length of 16 feet.
- Sign structures with a supporting, round or rectangular, post or beam with a maximum dimension of 8 inches.
- Retrofitted corbels for bridge approach slabs.
- Supporting utilities under bridges, including water pipes, electrical conduit and other utility piping systems.

For resin bonded anchors used in permanent sustained tension applications, the adhesive anchor systems shall have successfully completed testing for long term sustained load performance in accordance with ACI 355.4. Depending on the specific application of the permanent attachment, additional quality assurance performance measures such as field proof testing of production anchors in accordance with ACI 355.4 should be included in the design. Resin bonded anchors shall not be used in monotube sign structure, sign structure truss, and mast arm type signal standard applications.

Fast set resin bonding materials shall not be used for resin bonded anchors.

For carbon steel undercut anchors, hot-dip galvanized components are preferred, but not currently available from suppliers. Undercut anchors with electroplated zinc coatings are not considered equivalent or better and shall not be used. Therefore, stainless steel undercut anchors are the preferred option. Depending on the specific application of the permanent attachment, additional quality assurance performance measures such as field proof testing of production anchors in accordance with ACI 355.2 should be included in the design.

The design procedure for adhesive and undercut anchors shall be in accordance with ACI 318 Chapter 17, and system qualification testing requirements in accordance with ACI 355.4 and ACI 355.2, respectively.

Expansion anchors and mechanical anchors are not allowed for any permanent applications, except for specific connection details previously approved by the Bridge and Structures Office for precast concrete panel faced structural earth walls as low risk applications.

Cast-in-place concrete anchors remain the preferred option for bridge applications.

10.11 Drainage Design

Even though it is rare that poor drainage is directly responsible for a structural failure, it still must be a primary consideration in the design. Poor drainage can cause problems such as ponding on the roadway, erosion of abutments, and deterioration of structural members. Collecting the runoff and transporting it away from the bridge can prevent most of the problems. Proper geometrics during the preliminary stage is essential in order to accomplish this. The Hydraulics Branch recommends placing the bridge deck drainage off of the structure. Therefore, the Bridge Design Section has adopted the policy that all expansion joints shall be watertight.

Geometrics

Bridges shall have sufficient transverse and longitudinal slopes to allow the water to run quickly to the drains. A transverse slope of .02′/ft and longitudinal slope of 0.5 percent for minimum valves are required. Avoid placing sag vertical curves and superelevation crossovers on the structure that could result in hydroplaning conditions or, in cold climates, sheets of ice from melting snow. The use of unsymmetrical vertical curves may assist the designer in shifting the low point off the structure.

Hydrology

Hydrological calculations are made using the rational equation. A 10-year storm event with a 5-minute duration is the intensity used for all inlets except for sag vertical curves where a 50-year storm intensity is required.

On Bridge Systems

Drains shall only be placed on bridge structures when required. If required, the first preference is to place 5-inch diameter pipe drains that have no bars and drop straight to the ground. At other times, such as for steel structures, the straight drop drain is unacceptable and a piping system with bridge drains is required. The minimum pipe diameter shall be 6 inches with no sharp bends within the system. The Hydraulics Branch shall be contacted to determine the type of drain required (preferably Neenah).

Construction

Bridge decks have a striated finish in accordance with the *Standard Specifications* Section 6-02.3(10)D5, however, the gutters have an untextured finish (steel trowel) for a distance of 2 feet from the curb. This untextured area provides for smooth gutter flow and a Manning *n* value of .015 in the design.

10.12 Bridge Security

10.12.1 General

Security based bridge design and its direct correlation to modern social issues is addressed in this section. Criminal activity, illegal encampments, graffiti, hindrance to economic development and public eyesore create unwanted expensive. They also pose public health concerns and safety hazards for State Maintenance and Operations practices. The issue exists in urban areas as well as rural and recreational locales.

Bridges are dominant structures in landscapes. They are held to a higher standard of design due to their influence on communities, where economic and social settings are affected by their quality. Initial project cost savings may quickly be overshadowed by increased externalized costs. These externalized costs are born by local municipalities and businesses as well as other departments within WSDOT.

WSDOT bridge inspectors are required to inspect all bridges at least once every 24 months. The presence of the illegal encampments, as well as garbage, hypodermic needles, and feces often makes it impossible to do a close, hands-on inspection of the abutments and bearings of bridges. The Bridge Preservation Office has requested that maintenance clean up transient camps when it becomes difficult or impossible to do an adequate inspection of the bridges. Campfires set by the homeless have also caused damage to bridges.

Bridge Maintenance Crews also face the same difficulty when they need to do repair work on bridges in the urban area. Clean up requires (per law) posting the bridge seventy-two hours prior to any work. Material picked up is tagged, bagged, and stored for retrieval. Often the offenders are back the next day.

10.12.2 Design

Design is determined on a case by case basis using two strategies. These strategies are universally accepted best practices. The first, Crime Prevention through Environmental Design (CEPTD), is a multi-disciplinary approach to deterring criminal behavior.

The second, Context Sensitive Design (CSS), is also multi-disciplinary and focuses on project development methods. Multi-disciplinary teams consist of engineers and architects but may include law enforcement, local businesses, social service providers, and psychologists.

A. CPTED principals are based upon the theory that the proper design and effective use of the built environment can reduce crime, reduce the fear of crime, and improve the quality of life. Built environment implementations of CPTED seek to dissuade offenders from committing crimes by manipulating the built environment in which those crimes proceed from or occur. The six main concepts are territoriality, surveillance, access control, image/maintenance, activity support and target hardening. Applying all of these strategies is key when preventing crime in any neighborhood or right-of-way.

   Natural surveillance and access control strategies limit the opportunity for crime. Territorial reinforcement promotes social control through a variety of measures. These may include enhanced aesthetics or public art. Image/maintenance and activity support provide the community with reassurance and the ability to stop

crime by themselves. Target hardening strategies may involve fencing or concrete enclosures or they may include all techniques to resolve crime or chronic trespass into one final step.

B. WSDOT implements FHWA's CSS design development principles through Executive Order E 1028. The CSS methods require designers to consider the physical, economic, and social setting of a project. Stakeholder's interests are to be accounted for; including area residents and business owners.

10.12.3 Design Criteria

New bridges need to address design for the environment by basic criteria:

- Slopes under bridges need to be steep; around a 1:1 slope, and hardened with something like solid concrete so that flat areas cannot be carved into the hillside. Flat areas under bridge superstructures attract inappropriate uses and should be omitted.
- Illegal urban campers have been known to build shelters between the concrete girders. Abutment walls need to be high enough that they deny access to the superstructure elements. When it is not feasible to design for deterrence the sites need to be hardened with fencing buried several feet into the soil or with solid concrete walls. See Figures 14.2.3a and 14.2.3b for high security fence and concrete wall examples.
- Regular chain link is easy cut, therefore stouter material needs to be specified.
- Landscape design should coordinate with region or headquarters landscape architects. Areas need to be visible to law enforcement.

'High security' proprietary fence designs may be employed, or unique case-by-case custom designs may be required. Where required, coordinate with the State Bridge and Structures Architect.

10.13 Temporary Bridges

10.13.1 General

Temporary bridges are defined as bridges that are in service for 5 years or less. Any bridge that is expected to be in service for more than five years shall be designed using the requirements for permanent structures. These requirements apply to all temporary bridges regardless of the delivery contracting methods.

The approaches to the temporary bridge, including but not limited to, slopes, reinforced slopes, and retaining walls, shall be designed in accordance with the WSDOT *Geotechnical Design Manual* M 46-03.

10.13.2 Design

Temporary bridges shall be designed in accordance with the requirements of the current editions of:

AASHTO LRFD and interims
AASHTO SEISMIC
WSDOT *Bridge Design Manual* M 23-50, including all design memorandums
WSDOT *Geotechnical Design Manual* M 46-03

A. Design Requirements

The design of the temporary bridge shall not include an additional future overlay of 25 pound per square foot.

The live loading of the temporary bridge may be reduced to 75 percent of the HL-93 loading, except the deck design shall us 100 percent of the HL-93 loading.

B. Seismic Design Requirements

The seismic design of temporary bridges shall be in accordance with the requirements of the current edition of AASHTO SEISMIC, except the design response spectra shall be reduced by a factor not greater than 2.5.

The minimum support length provisions shall apply to all temporary bridges.

The Seismic Design Category (SDC) of the temporary bridge shall be obtained on the basis of the reduced/modified response spectrum except that a temporary bridge classified in SDC B, C, or D based on the unreduced spectrum cannot be reclassified to SDC A based on the reduced/modified spectrum.

C. Deck Design Requirements

Traffic barriers for temporary bridges shall be designed in accordance with the requirements of the current edition of AASHTO LRFD, but not less than TL-3 collision load requirements. The TL demand may be adjusted on a case-by-case basis for vehicle size and speed per AASHTO LRFD Tables 13.7.2-1 and 2.

The fall restraint specifications of WAC 296-155-24615 Section 2a requiring minimum vertical height of thirty-nine inches for traffic barriers shall be considered for temporary bridges.

Concrete bridge deck thickness may be reduced to 7 inches for concrete superstructure, and to 7½ inches for steel superstructures.

Epoxy coating requirement for bridge deck reinforcement may be waived for temporary bridges with 2 inch min cover for the top mat of reinforcement.

The driving surface of the temporary bridge shall be durable, skid resistant deck, with an initial skid number of at least 35 and maintaining a skid number of 26 minimum, in accordance with AASHTO T 242. The Contractor shall maintain the temporary bridge, including the driving surface, for the life of the temporary bridge in the project.

D. Superstructure Design Requirements

A 3 inch minimum HMA overlay could be used for temporary bridges made of adjacent precast concrete members.

Steel temporary bridges need not be painted.

Fatigue need not be checked for temporary bridges with steel superstructure.

All welding, repair welding, and welding inspection, of steel components of the temporary bridge shall conform to the *Standard Specifications* Section 6-03.3(25) and 6-03.3(25)A requirements specified for steel bridges.

Allowable tensile stress for precast-prestressed concrete girders under service limit state load combinations per AASHTO LRFD Article 5.9.4.2.2 may be used in lieu of those specified in Section 5.2.1C.

E. Foundation Design Requirements

Pile types such as precast, prestressed concrete piles, steel H piles, timber piles, micropiles and steel pipe piles may be used for temporary bridges.

Soldier pile wall with treated timber lagging may be used for temporary bridges.

10.13.3 NBI Requirements

Temporary or re-commissioned bridges used as a detour and in-service longer the 90 days shall receive full NBIS (all SI&A data; ex., NBIS inspection, load ratings and scour evaluation). All SI&A data shall be submitted to the Washington State NBI data base within 90 days of opening to vehicle traffic. An “open” bridge is defined as a bridge that is near substantial completion with general highway traffic accessing/ operating on the bridge in a configuration that is the final planned configuration.

Phased construction stages, if carrying traffic for 90 days or longer shall fall into these criteria.

Bridges open less than 90 days will need regular “safety” type inspections to ensure the safe operation of traffic on the bridge.

Contracts are to clearly identify the owner and who is responsible for all of this NBIS criteria.

Load ratings for legal trucks and special hauling vehicles are required for temporary and bridges constructed in phased stages. The minimum rating factor shall not be less than 1.0.

10.13.4 Submittal Requirements

The Contractor shall submit drawings and copies of supporting design calculations of the temporary bridge to the Engineer for approval in accordance with *Standard*

Specifications Section 6-01.9. The submittal shall include an erection plan and procedure in accordance with *Standard Specifications* Section 6-03.3(7)A.

Submittals for temporary bridges with total length of more than 200 ft shall be stamped and signed by a Washington State registered Structural Engineer (SE) in accordance with the requirements of WAC 196-23.

The Contractor shall construct the temporary bridge in accordance with the working drawings and erection plan as approved by the Engineer, environmental permit conditions specified in Section 1-07.5 as supplemented in the Special Provisions and as shown in the Plans, and in accordance with the details shown in the Plans.

10.14 Bridge Standard Drawings

10.1-A1-1 Monotube Sign Bridge Layout
10.1-A1-2 Monotube Sign Bridge Structural Details 1
10.1-A1-3 Monotube Sign Bridge Structural Details 2

10.1-A2-1 Monotube Cantilever Layout
10.1-A2-2 Monotube Cantilever Structural Details 1
10.1-A2-3 Monotube Cantilever Structural Details 2

10.1-A3-1 Monotube Sign Structure Balanced Cantilever Layout
10.1-A3-2 Monotube Balanced Cantilever Structural Details 1
10.1-A3-3 Monotube Balanced Cantilever Structural Details 2

10.1-A4-1 Monotube Sign Structures Foundation Type 1 Sheet 1 of 2
10.1-A4-2 Monotube Sign Structures Foundation Type 1 Sheet 2 of 2
10.1-A4-3 Monotube Sign Structures Foundation Types 2 and 3

10.1-A5-1 General Notes
10.1-A5-2 Monotube Sign Structure Miscellaneaous Details
10.1-A5-3 Monotube Sign Structure Single Slope Traffic Barrier Shaft Cap

10.1-A6-1 Bridge Mounted Sign Bracket Example Layout
10.1-A6-2 Bridge Mounted Sign Bracket Geometry
10.1-A6-3 Bridge Mounted Sign Bracket Details 1 of 3
10.1-A6-4 Bridge Mounted Sign Bracket Details 2 of 3
10.1-A6-5 Bridge Mounted Sign Bracket Details 3 of 3

10.2-A1-1 Traffic Barrier – Shape F Details 1 of 3
10.2-A1-2 Traffic Barrier – Shape F Details 2 of 3
10.2-A1-3 Traffic Barrier – Shape F Details 3 of 3

10.2-A2-1 Traffic Barrier – Shape F Flat Slab Details 1 of 3
10.2-A2-2 Traffic Barrier – Shape F Flat Slab Details 2 of 3
10.2-A2-3 Traffic Barrier – Shape F Flat Slab Details 3 of 3

10.2-A3-1 Traffic Barrier – Single Slope Details 1 of 3
10.2-A3-2 Traffic Barrier – Single Slope Details 2 of 3
10.2-A3-3 Traffic Barrier – Single Slope Details 3 of 3

10.2-A4-1 Pedestrian Barrier Details 1 of 3
10.2-A4-2 Pedestrian Barrier Details 2 of 3
10.2-A4-3 Pedestrian Barrier Details 3 of 3

10.2-A5-1A Traffic Barrier – Shape F 42″ Details 1 of 3 (TL-4)
10.2-A5-1B Traffic Barrier – Shape F 42″ Details 1 of 3 (TL-5)
10.2-A5-2 Traffic Barrier – Shape F 42″ Details 2 of 3
10.2-A5-3 Traffic Barrier – Shape F 42″ Details 3 of 3

10.2-A6-1A Traffic Barrier – Single Slope 42″ Details 1 of 3 (TL-4)
10.2-A6-1B Traffic Barrier – Single Slope 42″ Details 1 of 3 (TL-5)

10.2-A6-2 Traffic Barrier – Single Slope 42″ Details 2 of 3
10.2-A6-3 Traffic Barrier – Single Slope 42″ Details 3 of 3 (TL-4 and TL-5)

10.2-A7-1 Traffic Barrier – Shape F Luminaire Anchorage Details
10.2-A7-2 Traffic Barrier – Single Slope Luminaire Anchorage Details
10.2-A7-3 Pedestrain Barrier Luminaire Anchorage Details

10.4-A1-1 Thrie Beam Retrofit Concrete Baluster
10.4-A1-2 Thrie Beam Retrofit Concrete Railbase
10.4-A1-3 Thrie Beam Retrofit Concrete Curb
10.4-A1-4 WP Thrie Beam Retrofit SL1 Details 1 of 2
10.4-A1-5 WP Thrie Beam Retrofit SL1 Details 2 of 2

10.4-A2-1 Traffic Barrier – Shape F Rehabilitation Details 1 of 3
10.4-A2-2 Traffic Barrier – Shape F Rehabilitation Details 2 of 3
10.4-A2-3 Traffic Barrier – Shape F Rehabilitation Details 3 of 3

10.5-A1-1 Bridge Railing Type Pedestrian Details 1 of 2
10.5-A1-2 Bridge Railing Type Pedestrian Details 2 of 2

10.5-A2-1 Bridge Railing Type BP Details 1 of 2
10.5-A2-2 Bridge Railing Type BP Details 2 of 2

10.5-A3-1 Bridge Railing Type S-BP Details 1 of 2
10.5-A3-2 Bridge Railing Type S-BP Details 2 of 2

10.5-A4-1 Pedestrian Railing Details 1 of 2
10.5-A4-2 Pedestrian Railing Details 2 of 2

10.5-A5-1 Bridge Railing Type Chain Link Snow Fence
10.5-A5-2 Bridge Railing Type Snow Fence Details 1 of 2
10.5-A5-3 Bridge Railing Type Snow Fence Details 2 of 2
10.5-A5-4 Bridge Railing Type Chain Link Fence

10.6-A1-1 Bridge Approach Slab Details 1 of 3
10.6-A1-2 Bridge Approach Slab Details 2 of 3
10.6-A1-3 Bridge Approach Slab Details 3 of 3

10.6-A2-1 Pavement Seat Repair Details
10.6-A2-2 Pavement Seat Repair Details

10.8-A1-1 Utility Hanger Details
10.8-A1-2 Utility Hanger Details

10.11-A1-1 Bridge Drain Modification
10.11-A1-2 Bridge Drain Modification for Types 2 thru 5

10.15 References

AASHTO Guide Specification for *LRFD Seismic Bridge Design*, 2nd Edition (2011), Washington DC.

AASHTO, 1st Edition (2015), Washington DC.

AASHTO *Standard Specifications for Highway Bridges*, 17th Edition (2002), Washington DC.

ACI 318-14 (2014) "Building Code Requirements for Structural Concrete and Commentary," American Concrete Institute, Farmington Hills, MI.

ACI 355.2-07 (2007) "Qualification of Post-Installed Mechanical Anchors in Concrete and Commentary," American Concrete Institute, Farmington Hills, MI.

ACI 355.4-11 (2014) "Qualification of Post-Installed Adhesive Anchors in Concrete and Commentary," American Concrete Institute, Farmington Hills, MI.

NCHRP Report 230, "Recommended Procedures for the Safety Performance Evaluation of Highway Appurtenances", Transportation Research Board, 1991, Washington DC.

NCHRP Report 350, "Recommended Procedures for the Safety Performance Evaluation of Highway Features", Transportation Research Board, 1993, Washington DC.

NCHRP Report 663, "Design of Roadside Barrier Systems Placed on MSE Retaining Walls", NCHRP Project 22-20, Transportation Research Board, 2010, Washington DC.

WSDOT *Design Manual* M 22-01

WSDOT *Geotechnical Design Manual* M 46-03

WSDOT *Standard Plans* M 21-01

WSDOT *Standard Specifications for Road, Bridge, and Municipal Construction* (*Standard Specifications*) M 41-10

WSDOT E 1028 *Context Sensitive Solutions Executive Order*

Newman, O. Defensible Space: Crime Prevention Through Urban Design. New York: Macmillan. 1972.

Jacobs, Jane. The Death and Life of Great American Cities. New York: Random House. 1961.

Chapter 11 Detailing Practice Contents

11.1 Detailing Practice 11-1
11.1.1 Standard Office Practices. 11-1
11.1.2 Bridge Office Standard Drawings and Office Examples 11-8
11.1.3 Plan Sheets 11-9
11.1.4 Electronic Plan Sharing Policy. 11-12
11.1.5 Structural Steel. 11-12
11.1.6 Aluminum Section Designations 11-14
11.1.7 Abbreviations. 11-15

11.2 Bridge Standard Drawings. 11-22

11.3 Appendices 11-23
Appendix 11.1-A1 Dimensional Callout Example. 11-24
Appendix 11.1-A2 Typical Details. 11-25
Appendix 11.1-A3 Typical Section Callouts 11-26

11.1 Detailing Practice 11-1
11.1.1 Standard Office Practices. 11-1
11.1.2 Bridge Office Standard Drawings and Office Examples 11-8
11.1.3 Plan Sheets 11-9
11.1.4 Electronic Plan Sharing Policy. 11-12
11.1.5 Structural Steel. 11-12
11.1.6 Aluminum Section Designations 11-14
11.1.7 Abbreviations. 11-15

11.2 Bridge Standard Drawings. 11-23

11.3 Appendices 11-24

Appendix 11.1-A1 Dimensional Callout Example. 11-25
Appendix 11.1-A2 Typical Details. 11-26
Appendix 11.1-A3 Typical Section Callouts 11-27

11.1 Detailing Practice

The following is to provide basic information on drafting and the fundamentals of Bridge and Structures Office drafting practices.

11.1.1 Standard Office Practices

A. Purpose

- The purpose of these standards is to enable the Bridge and Structures Office to produce **consistent** and **effective** plan sheets that will have uniform appearance and information.
- Designers and detailers are responsible for ensuring that these criteria are implemented.
- The Bridge Design Engineer must approve deviation from these standards.

B. Planning

- The designer and the structural detailer together coordinate the **scope** of the detailing work involved in each project. Time should be allotted for checking plans for accuracy and consistency with office practices.
- Similar bridge plans and details should be reviewed and kept as **examples** for maintaining consistent detailing practices. These examples should not be older than three years.

C. Drawing Orientation and Layout Control

- Standard bridge sheet format is 34 inches × 22 inches with the bottom 2 inches used for title block and related information.
- Contract plans are printed, sealed, signed and submitted, half size, on 11″ × 17″ paper.
- Drawings shall be carefully organized so the intent of the drawing is easily understood.
  - **North arrow** shall be placed on layouts and footing/foundation layouts.
  - **Related details** shall be grouped together in an orderly arrangement: lined up horizontally and vertically and drawn to the same scale.
  - Do not crowd the drawing with details.
  - The following is a standard sheet configuration when plan, elevation, and sectional views are required.
  - The Plan view layout of structures should be oriented from left to right in the direction of increasing state route mileposts. For retaining walls, see the second bullet under subsection I. For layouts of existing bridges undergoing widening, expansion joint or thrie beam retrofit, or other structural modification, this orientation requirement may result in the bridge layout being opposite from what is shown in the original plans. In such cases, the designer and detailer should review the Bridge Preservation

Office inspection records for the bridge, and the bridge layout orientation and pier identification should be laid out to be consistent with the Bridge Preservation Office inspection records.

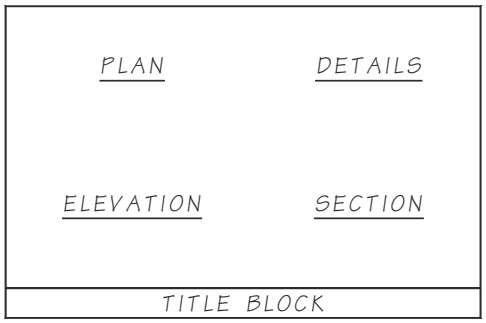

D. Lettering

1. General

- **Lettering** shall be upper case only, slanted at approximately 68 degrees. General text is to be approximately ⅛″ high.
- Text shall be **oriented** so as to be read from the **bottom** or **right edge** of the sheet.
- **Detail titles** shall be a similar font as general text, about twice as high and of a heavier weight. Underline all titles with a single line having the same weight as the lettering.

2. Dimensioning

- A dimension shall be shown **once** on a drawing. Duplication and unnecessary dimensions should be avoided.
- All dimension figures shall be placed above the dimension line, so that they may be read from the bottom or the right edge of the sheet, as shown in the following detail:

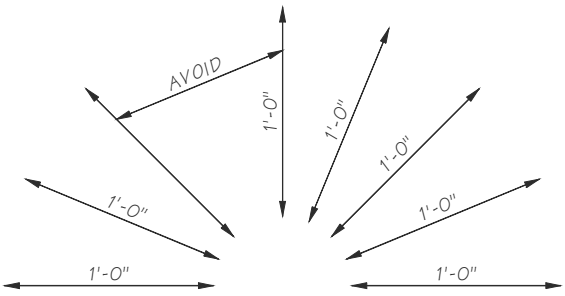

AVOID DIMENSION LINES
INCLINED AS SHOWN ABOVE.

- When details or structural elements are complex, utilize two drawings, one for dimensions and the other for reinforcing bar details.
- Dimensions 12 inches or more shall be given in feet and inches unless the item dimensioned is conventionally designated in inches (for example, 16″ pipe).
- Dimensions that are less than one inch over an even foot, the fraction shall be preceded by a zero (for example, 3′-0¾″).
- Place dimensions outside the view, preferably to the right or below. However, in the interest of clarity and simplicity it may be necessary to place them otherwise. Examples of dimensioning placement are shown on Appendix 11.1-A1.

E. Line Work

- All line work must be of sufficient size, weight, and clarity so that it can be easily read from a print that has been reduced to 11″ × 17″ or one-half the size of the original drawing.
- The line style used for a particular structural outline, centerline, etc., shall be kept consistent wherever that line is shown within a set of bridge plans.
- Line work shall have appropriate gradations of width to give line contrast as shown below. Care shall be taken that the thin lines are dense enough to show clearly when reproduced.

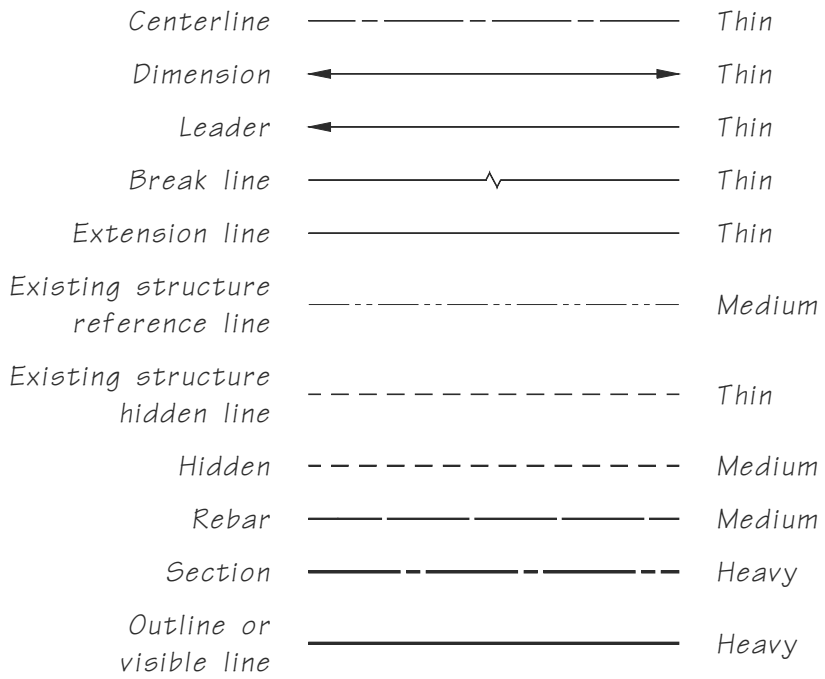

- When drawing structural sections showing reinforcing steel, the **outline** of the sections shall be a **heavier** line weight than the **rebar**.
- The order of **line precedence** (which of a pair of crossing lines is broken) is as follows:

  1. Dimension lines are never broken.
  2. Leader line from a callout.
  3. Extension line.

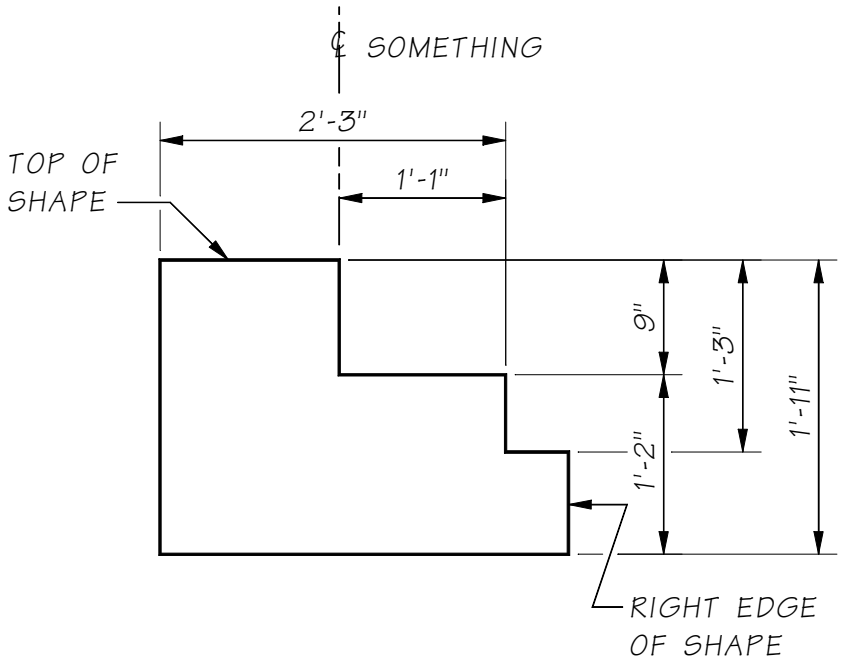

LINE PRECEDENCE DIAGRAM

THIS DIAGRAM DEMONSTRATES WHICH LINE IS TO BE BROKEN WHEN TWO LINES CROSS.

F. Scale

- Scales are not to be shown in the plans.
- When **selecting a scale**, it should be kept in mind that the drawing will be reduced. Generally, the minimum scale for a section detail with rebar is ⅜″ = 1′. The minimum scale to be used on steel details will be ¾″ = 1′.
- The contract plan sheets are not to be used to take measurements in the field. They will, however, be drawn using **scales that can be found on any standard architectural or engineering scale**.
- Care should be taken that all structural elements are **accurately** drawn to scale.
- Sections and views may be enlarged to show more detail, but the number of different scales used should be kept to a minimum.

G. Graphic Symbols

1. Graphic symbols shall be in accordance with the following:
   a. Structural steel shapes: See also AISC *Manual of Steel Construction*.
   b. Welding symbols: See Lincoln Welding Chart.
   c. Symbols for hatching different materials are shown on Appendix 11.1-A2.

H. Structural Sections, Views and Details

- A **section** cuts through the structure, a view is from outside the structure, a **detail** shows a structural element in more detail – usually a larger scale.
- Whenever possible Sections and views shall be taken looking to the **right, ahead on stationing**, or **down**.
- Care shall be taken to ensure that the **orientation** of a detail drawing is identical to that of the plan, elevation, etc., from which it is taken. Where there is a **skew** in the bridge any sections should be taken from **plan** views.
- The default is to be looking ahead on stationing. The only mention of view orientation is if the view is looking back on stationing.
- On plan and elevation drawings where there is insufficient space to show cut sections and details, the section and detail drawing should be on the plan sheet immediately following the plan and elevation drawing unless there are a series of related plans. If it is impractical to show details on a section drawing, a detail sheet should immediately follow the section drawing. In other words, the order of plan sheets should be from general plan to more minute detail.
- A circle divided into upper and lower halves shall identify structural sections, views, and details. Examples are shown in Appendix 11.1-A3.
- Breaks in lines are allowable provided that their intent is clear.

I. Miscellaneous

- **Callout arrows** are to come off either the beginning or end of the sentence. This means the top line of text for arrows coming off the left of the callout or the bottom line of text for arrows pointing right.
- Except for the Layout, **wall elevations** are to show the exposed face regardless of direction of stationing. The Layout sheet stationing will read increasing left to right. The elevation sheets will represent the view in the field as the wall is being built.

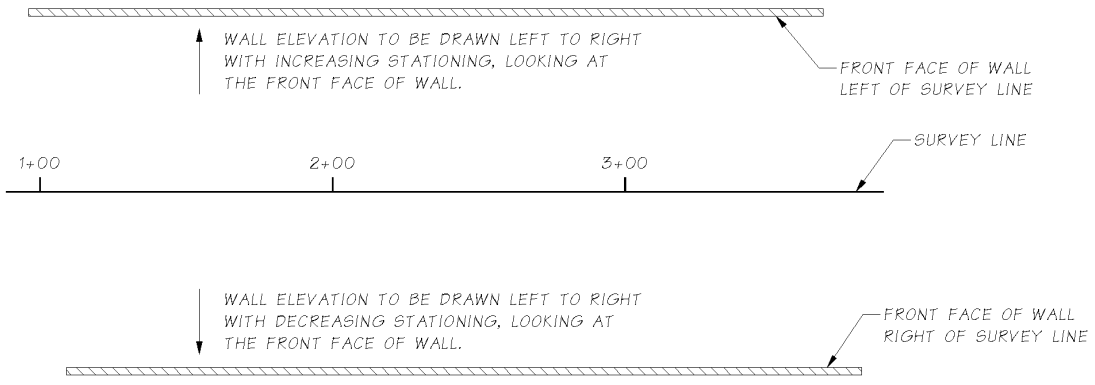

Plan

- Do not detail a bridge element in more than one location. If the element is changed there is a danger that only one of the details is updated.
- Centerline callouts shall be normal to the line itself approximately an eighth inch from the end of the line:

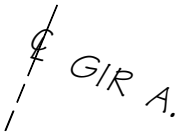

J. Revisions

- **Addendums** are made after general distribution and project ad but before the contract is awarded. Changes made to the plan sheets during this time shall be **shaded** or clouded in accordance with the *Plans Preparation Manual* Appendix 5 (note that all table entry revisions shall be shaded). Subsequent addendums are shaded and the shading from previous addendums is removed.
- **Change orders** are made after the contract has been awarded. Changes will be marked with a number inside a circle inside a **triangle**.  Shading for any addendums is removed.
- All addendums and change orders will be noted in the **revision block** at the bottom of the sheet using font 25.

K. Title Block

- The project title is displayed in the contract plan sheet title block. The title consists of Line 1 specifying the highway route number(s), Line 2 and possibly Line 3 specifying the title verbiage. Bridge structures use a fourth line, in a smaller font, to specify the bridge name and number in accordance with the *Bridge List* M 23-09 and BDM Sections 2.3.1.A and 2.3.2.A.
- The exact wording of Lines 1, 2, and 3 of the project title, including line arrangement, abbreviations, and punctuation, is controlled by the project definition as specified by legislative title and the Capital Program Management System (CPMS) database.
- The highway route number(s) in Line 1 shall be consistent with WSDOT naming practice. Interstate routes (5, 82, 90, 182, 205, 405, and 705) shall be specified as I-(number). US routes (2, 12, 97, 97A, 101, 195, 197, 395, and 730) shall be specified as US (number). All other routes shall be specified as SR (number). Projects including two highway routes shall include both route numbers in Line 1, as in "US 2 And I-5". Projects including three or more highway routes shall be specified with the lowest numbered route, followed by "Et Al", as in "SR 14 Et Al".
- The job number block just to the left of the middle of the title block shall display the PS&E Job Number assigned to the project by the Region Plans Office. The PS&E Job Number consists of six characters. The first two characters correspond to the last two digits of the calendar year. The third character corresponds to the letter designation assigned to the specific Region (NWR - A, NCR - B, OR - C, WSF and selected UCO projects - W, SWR - X, SCR - Y, and ER - Z). The final three characters correspond to the three digit number assigned to the specific project by the Region Plans Office.

L. Reinforcement Detailing

- Contract documents shall convey all necessary information for fabrication of reinforcing steel. In accordance with *Standard Specifications* Section 6-02.3(24), reinforcing steel details shown in the bar list shall be verifiable in the plans and other contract documents.
- Reinforcement type and grade is specified in *Standard Specifications* Section 9-07.2 and need not be provided elsewhere in the contract documents unless it differs.
- Size, spacing, orientation and location of reinforcement shall be shown on the plan sheets.
- Reinforcement shall be identified by mark numbers inside a rectangle. Reinforcing bar marks shall be called out at least twice. The reinforcement including the spacing is called out in one view (such as a plan or elevation). The reinforcement without the spacing is called out again in at least one other view taken from a different angle (such as a section).
- Epoxy coating for reinforcement shall be shown in the plans by noting an E inside a triangle.
- The spacing for reinforcement shall be on a dimension line with extension lines. Do not point to a single bar and call out the spacing. Reinforcement spacing callouts shall include a distance. If the distance is an unusual number, give a maximum spacing. Do not use "equal spaces" as in, "23 equal spaces = 18′-9″ " (the steel workers should not have to calculate the spacing). Also, never use the word "about" as in, "23 spaces @ about 10″ = 18′-9″ "(this is open to too much interpretation). Instead these should read, "23 spaces @ 10″ max. = 18′-9″."
- Reinforcement geometry shall be clear in plan details. Congested areas, oddly bent bars, etc. can be clarified with additional views/details/sections or adjacent bending diagrams. In bending diagrams, reinforcement dimensions are given out-to-out. It may be necessary to show edges of reinforcement with two parallel edge lines to clearly show working points and dimensions.
- Reinforcement lengths, angles, etc. need not be called out when they can be determined from structural member sizes, cover requirements, etc. Anchorage, embedment and extension lengths of reinforcement shall be dimensioned in the plans.
- Standard hooks per AASHTO LRFD Section 5.10.2.1 need not be dimensioned or called out, but shall be drawn with the proper angle (90º, 135º or 180º). Seismic hooks per AASHTO LRFD Section 5.10.2.2 (used for transverse reinforcement in regions of expected plastic hinges) shall be called out on the plans whenever they are used.
- Splices in reinforcement are required when reinforcement lengths exceed the fabrication lengths in Section 5.1.2.F. They may also be necessary in other locations such as construction joints, etc. The location, length and stagger of lap splices shall be shown on the plan sheets. Tables of applicable lap splice lengths are acceptable with associated stagger requirements. Type, location and stagger of mechanical and welded splices of reinforcement shall be shown.

- Where concrete cover requirements differ from those given in the standard notes or *Standard Specifications* Section 6-02.3(24)C, they shall be shown in the plans. It shall be clear whether the cover requirement refers to ties and stirrups or the main longitudinal bars.
- Bar list sheets shall be prepared for plan sets including bridges. They shall be included at the end of each bridge plan set. They are not stamped. They are provided in the plans as a convenience for the Contractor and are to be used at their own risk. Despite this warning, Contractors sometimes use the bar list directly to fabricate reinforcement without confirming details from the plans. Designers should therefore strive for accuracy in the bar list. An accurate bar list also serves as a checking mechanism and a way to calculate reinforcement quantities.
- The reinforcing for some structural members such as approach slabs, shafts, piles, barrier, retaining walls, bridge grate inlets, sign structure foundations, precast SIP deck panels and precast girders are not shown in the bar list at the end of the bridge plan set but may include their own bar list on their plan sheets. These components typically have shop plans, include steel reinforcement within their unit costs and/or are constructed by separate sub-contractors.
- Other reinforcement detailing references include ACI 315-99 "Details and Detailing of Concrete Reinforcement", ACI 318-08 "Building Code Requirements for Structural Concrete", and CRSI "Manual of Standard Practice" May 2003.

11.1.2 Bridge Office Standard Drawings and Office Examples

A. General

- The Bridge Office provides standard drawings and example sheets of various common bridge elements.

B. Use of Standards

- The Standard Drawings are to be considered as nothing more than **examples** of items like girders or traffic barriers which are often used and are very similar from job to job.
- They are to be **copied** to a structure project and **modified to fit** the particular aspects of the structure. They are not intended to be included in a contract plan set without close scrutiny for applicability to the job.

C. Changes to Standards

- New standard drawings and revisions to existing drawings shall be approved by the Bridge Design Engineer and shall be made according to the same office practices as contract plan sheets.

11.1.3 Plan Sheets

Plan sheets should be assembled in the **order of construction** and include the items listed below. Phasing or large-scale projects may require more than one sheet to properly detail plan items.

- Layout
- General Notes/Construction Sequence
- Footing/Foundation Layout
- Piles/Shafts
- Abutment
- Intermediate Piers/Bents
- Bearing Details
- Framing Plan
- Typical Section
- Girders/Diaphragms
- Bridge Deck Reinforcement (Plan and transverse section)
- Expansion Joints (if needed)
- Traffic Barrier
- Bridge Approach Slab
- Barlist

A. Layout

- The Layout sheet shall contain, but is not limited to:
  - Plan View with ascending stations from left to right
  - Elevation View shown as an outside view of the bridge and shall be visually aligned with the plan view.
- The original preliminary plan will be copied to create the final layout. Views, data, and notes may be repositioned to improve the final product.
- Items on the preliminary plan, which should **not** appear on the final layout are as follows:
  - Typical roadway sections.
  - Vertical curve, Superelevation and curve data for other than the main line.
  - Other information that was preliminary or that will be found elsewhere in the plans.
- Items not normally found on the preliminary plan, which should be **added**:
  - **Test hole locations** (designated by $^{3}/_{16}$ inch circles, quartered) to plan view.
  - Elevation view of **footings**, **seals**, **piles**, etc. Show elevation at Bottom of footing and, if applicable, the type and size of piling.
  - **General notes** above legend on right hand side, usually in place of the typical section.
  - Title “LAYOUT” in the title block and sheet number in the space provided.
  - Other features, such as lighting, conduit, signs, excavation, riprap, etc. as determined by the designer.
- The preliminary plan checklist in Appendix A, Chapter 2 can be used for reference.

B. General Notes/Construction Sequence

The General notes shall contain the following information:

- Reference to the current edition of the WSDOT *Standard Specifications*
- Reference to the current edition of the AASHTO LRFD design specifications
- Reference to the current AASHTO Seismic design specifications and seismic design category information
- The types of concrete allowed on the project
- Abutment backfill requirements
- Concrete cover requirements
- Concrete foundation seal information
- Pile or shaft information
- Material requirements

C. Footing/Foundation Layout

- An abutment with a **spread footing** has a Footing Layout. An abutment with piles and pile cap has a Foundation Layout.
- The Footing Layout is a plan of the bridge whose details are limited to those needed to **locate the footings**. The intent of the footing layout is to minimize the possibility of error at this initial stage of construction.
- The Foundation Layout is a plan of the bridge whose details are limited to those needed to **locate the shafts or piles**. The intent of the Foundation layout is to minimize the possibility of error at this initial stage of construction.
- Other related information and/or details such as pedestal sizes, and column sizes are considered part of the pier drawing and **should not be included** in the footing layout.
- The Footing Layout should be shown on the layout sheet if space allows. It need not be in the same scale. When the general notes and footing layout cannot be included on the first (layout) sheet, the footing layout should be included on the second sheet.
- Longitudinally, footings should be located using the **survey line** to reference such items as the footing, centerline pier, centerline column, or centerline bearing, etc.
- When **seals** are required, their locations and sizes should be clearly indicated on the footing layout.
- The Wall Foundation Plan for retaining walls is similar to the Footing Plan for bridges except that it also shows dimensions to the front face of wall.
- Appendix 11.1-A4 is an example of a footing layout showing:
  - The basic information needed.
  - The method of detailing from the survey line.

D. Piles/Shafts

E. Abutment

- Bridge elements that have not yet been built will not be shown. For example, the superstructure is not to be shown, dashed or not, on any substructure details.
- Elevation information for seals and piles or shafts may be shown on the abutment or pier sheets.
- Views are to be oriented so that they represent what the contractor or inspector would most likely see on the ground. Pier 1 elevation is often shown looking back on stationing. A note should be added under the Elevation Pier 1 title saying "Shown looking back on stationing".

F. Intermediate Piers/Bents

- Each pier shall be detailed separately as a general rule. If the intermediate piers are identical except for height, then they can be shown together.

G. Bearing Details

H. Framing Plan

- Girder Lines must be identified in the plan view (Gir. A, Gir. B, etc.).

I. Typical Section

- Girder spacing, which is tied to the bridge construction baseline
- Roadway slab thickness, as well as web and bottom slab thicknesses for box girders
- "A" dimension
- Limits of pigmented sealer
- Profile grade and pivot point and cross slopes
- Utility locations
- Curb to curb roadway width
- Soffit and drip groove geometry

J. Girders/Diaphragms

- Prestressed girder sheets can be copied from the Bridge Office library but they must be modified to match the project requirements.

K. Bridge Deck Reinforcement

- Plan and transverse section views

L. Expansion Joints

M. Traffic Barrier

- Traffic barrier sheets can be copied from the Bridge Office library but they must be modified to match the project requirements.

N. Bridge Approach Slab

- Approach slab sheets can be copied from the Bridge Office library and modified as necessary for the project.

O. Barlist

- The barlist sheets do not require stamping because they are not officially part of the contract plan set.

11.1.4 Electronic Plan Sharing Policy

The following procedure describes the Bridge Design Office or WSDOT consultants' electronic plan sharing policy with other WSDOT offices, consultants, contractors and other agencies:

Plan sheets prepared by the Bridge Design Office or WSDOT consultants may be electronically sent out to other WSDOT offices, consultants, contractors and other agencies in DWG format only if all of the following steps are taken:

1. Entire information in the title block is removed from the plan sheet.
2. A disclaimer reading "FOR INFORMATION ONLY" is printed diagonally across each plan sheet; and
3. A letter of disclaimer is sent as a cover or an attachment to the plan sheet(s), indicating that attached plans are for information only and that WSDOT has no responsibility for accuracy of the contents.

Bridge Office plan sheets may also be electronically shared if requested in PDF format. PDF files need to only include the disclaimer noted in Step 2 above. Examples of bridge plan sheets modified for electronic sharing are shown for clarity. Time spent modifying and submitting electronic plan sheets shall be charged to the job number provided by the construction PE's office.

This policy applies only to current projects under design or under contract. Historical or as-built plan sheets may only be shared in PDF format, and only if condition #3 is followed, as described above.

11.1.5 Structural Steel

A. General

- Flat pieces of steel are termed plates, bars, sheets or strips, depending on the dimensions.

B. Bars

- Up to 6 inches wide, 0.203 in. ($^{3}/_{16}$ inch) and over in thickness, or 6 inches to 8 inches wide, 0.230 in. ($^{7}/_{32}$ inch) and over in thickness.

C. Plates

- Over 8 inches wide, 0.230 in. ($^{7}/_{32}$ inch) and over in thickness, or over 48 inches wide, 0.180 in ($^{11}/_{64}$ inch) and over in thickness.

D. Strips

- Thinner pieces up to 12 inches wide are strips and over 12 inches are sheets. A complete table of classification may be found in the AISC Manual of Steel Construction, 8th Ed. Page 6-3.

E. Labeling

- The following table shows the usual method of labeling some of the most frequently used structural steel shapes. Note that the inches symbol (") is omitted, but the foot symbol (') is used for length including lengths less than a foot.

PLATES	PL	½	x	34	x	5'-6					ANGLES	L	6	x	5	x	¾	x	2'-1				
	GROUP SYMBOL	THICKNESS IN INCHES		WIDTH IN INCHES		LENGTH IN FEET AND INCHES						GROUP SYMBOL	LONG LEG IN INCHES		SHORT LEG IN INCHES		THICKNESS IN INCHES		LENGTH IN FEET AND INCHES				
FLAT BARS	BAR	2	x	¾	x	0'-6					RECTANGULAR HSS	HSS	6	x	5	x	¼	x	3'-2				
	GROUP SYMBOL	WIDTH IN INCHES		THICKNESS IN INCHES		LENGTH IN FEET AND INCHES						GROUP SYMBOL	WIDTH IN INCHES		WIDTH IN INCHES		WALL THICKNESS IN INCHES		LENGTH IN FEET AND INCHES				
SQUARE BARS	BAR	2	◪	x	3'-4						CIRCULAR HSS	HSS	3.000	x	0.250	x	2'-5						
	GROUP SYMBOL	SIZE IN INCHES	CONVENTION FOR "SQUARE"		LENGTH IN FEET AND INCHES							GROUP SYMBOL	OUTSIDE DIAM. IN INCHES		WALL THICKNESS IN INCHES		LENGTH IN FEET AND INCHES						
ROUND BARS	BAR	2	ø	x	0'-4						PIPES	1½"ø	STD	PIPE									
	GROUP SYMBOL	SIZE IN INCHES	CONVENTION FOR "ROUND"		LENGTH IN FEET AND INCHES							NOMINAL DIAM. IN INCHES	DESIGNATION		GROUP SYMBOL								

11.1.6 Aluminum Section Designations

The designations used in the tables are suggested for general use.

Section	Designation	Example
I-Beams	I *DEPTH* × *WT*	14 × 3.28
Wide-Flange Sections	WF *DEPTH* × *WT*	WF4 × 4.76
Wide-Flange Sections, Army-Navy Series	WF(A-N) *DEPTH* × *WT*	WF(A-N)4 × 1.79
American Standard Channels	C *DEPTH* × *WT*	C4 × 1.85
Special Channels	CS DEPTH × WT	CS4 × 3.32
Wing Channels	CS(WING) *WIDTH* × *WT*	CS(WING)4 × 0.90
Army-Navy Channels	C(A-N) *DEPTH* × *WT*	C(A-N)4 × 1.58
Angles	L *LL* × *LL* × *TH*	L3 × 3 × 0.25
Square End Angles	LS *LL* × *LL* × *TH*	LS2 × 2 × 0.187
Bulb Angles	BULB L *LL1* × *LL2* × *TH1* × *TH2*	BULB L4 × 3.5 × 0.375 × 0.375
Bulb Angle, Army-Navy Series	BULB L(A-N) *LL1* × *LL2* × *TH1* × *TH2*	BULB L(A-N) 3 × 2 × 0.188 × 0.188
Tees	T *DEPTH* × *WIDTH* × *WT*	T4 × 4 × 3.43
Army-Navy Tees	T(A-N) *DEPTH* × *WIDTH* × *WT*	T(A-N)4 × 4 × 2.27
Zees	Z *DEPTH* × *WIDTH* × *WT*	Z4 × 3.06 × 2.85
Plates	PL *TH* × *WIDTH*	PL¼ × 8
Rods	RD *DIA*	RD 1
Square Bars	SQ *SDIM*	SQ 4
Rectangle Bars	RECT *TH* × *WIDTH*	RECT¼ × 4
Round Tubes	*ODIA OD* × *TH* WALL	4OD × 0.125 WALL
Square Tubes	*ODIM SQ* × *TH* WALL	3SQ × 0.219 WALL
Rectangle Tubes	*DEPTH* × *WIDTH RECT* × *TH* WALL	4 × 1.5 RECT × 0.104 WALL

WT - WEIGHT in LB/FT based on density of 0.098
TH - THICKNESS, LL - LEG LENGTH, DIA – DIAMETER
ODIA - OUTSIDE DIAMETER, ODIM - OUTSIDE DIMENSION
SDIM - SIDE DIMENSION

All lengths in inches

11.1.7 Abbreviations

A. General

- Abbreviations, as a rule, are to be **avoided**.
- Because different words sometimes have identical abbreviations, the word should be spelled out where the meaning may be in doubt.
- A few **standard signs** are in common use in the Bridge and Structures Office. These are listed with the abbreviations.
- A **period** should be placed after all abbreviations, except as listed below.
- **Apostrophes** are usually not used. Exceptions: pav't., req'd.
- Abbreviations for **plurals** are usually the same as the singular. Exceptions: figs., no., ctrs., pp.
- No abbreviations in titles.

B. List of abbreviations commonly used on bridge plan sheets:

A

abutment	ABUT.
adjust, adjacent	ADJ.
aggregate	AGG.
alternate	ALT.
ahead	AHD.
aluminum	AL.
American Society for Testing and Materials	ASTM
American Association of State Highway and Transportation Officials	AASHTO
and	&
angle point	A.P.
approved	APPRD.
approximate	APPROX.
area	A
asbestos cement pipe	ASB. CP
asphalt concrete	AC
asphalt treated base	ATB
at	@ (used only to indicate spacing or pricing, otherwise spell it out)
avenue	AVE.
average	AVG.

B

back	BK.
back of pavement seat	B.P.S.
bearing	BRG.
begin horizontal curve (Point of Curvature)	P.C.
begin vertical curve	BVC
bench mark	BM
between	BTWN.
bituminous surface treatment	BST
bottom	BOT.

boulevard	BLVD.
bridge	BR.
bridge drain	BR. DR.
building	BLDG.
buried cable	BC

C

cast-in-place	CIP
cast iron pipe	(C.I.P.)
center, centers	CTR., CTRS.
centerline	℄
center of gravity	CG
center to center	CTR. TO CTR., C/C
Celsius (formerly Centigrade)	C
cement treated base	CTB
centimeters	CM.
class	CL.
clearance, clear	CLR.
compression, compressive	COMP.
column	COL.
concrete	CONC.
conduit	COND.
concrete pavement	PCCP (Portland Cement Concrete Pavement)
construction	CONST. or CONSTR.
continuous	CONT. or CONTIN.
corrugated	CORR.
corrugated metal	CM
corrugated steel pipe	CSP
countersink	CSK.
county	CO.
creek	CR.
cross beam	X-BM.
crossing	XING
cross section	X-SECT.
cubic feet	CF or CU. FT. or $FT.^3$
cubic inch	CU. IN. or $IN.^3$
cubic yard	CY or CU. YD. or YD^3
culvert	CULV.

D

degrees, angular	° or DEG.
degrees, thermal	C or F
diagonals(s)	DIAG.
diameter	DIAM. or ø
diaphragm	DIAPH.
dimension	DIM.
double	DBL.
drive	DR.

E

each	EA.
each face	E.F.
easement	EASE., ESMT.
East	E.
edge of pavement	EP
edge of shoulder	ES
endwall	EW
electric	ELECT
elevation	EL. or ELEV.
embankment	EMB.
end horizontal curve (Point of Tangency)	P.T.
end vertical curve	EVC
Engineer	ENGR.
equal(s) or = (mathematical result)	EQ. (as in eq. spaces)
estimate(d)	EST.
excavation	EXC.
excluding	EXCL.
expansion	EXP., EXPAN.
existing	EXIST.
exterior	EXT.

F

Fahrenheit	F
far face	F.F.
far side	F.S.
feet (foot)	FT. or ’
feet per foot	FT./FT. or ’/’ or ’/FT.
field splice	F.S.
figure, figures	FIG., FIGS.
flat head	F.H.
foot kips	FT-KIPS
foot pounds	FT-LB
footing	FTG.
forward	FWD.
freeway	FWY.

G

gallon(s)	GAL.
galvanized	GALV.
galvanized steel pipe	GSP
gauge	GA.
General Special Provisions	GSP
girder	GIR.
ground	GR.
guard railing	GR

H

hanger	HGR.
height	HT.
height (retaining wall)	H
hexagonal	HEX.
high strength	H.S.
high water	H.W.
high water mark	H.W.M.
highway	HWY.
horizontal	HORIZ.
hot mix asphalt	HMA
hour(s)	HR.
hundred(s)	HUND.

I

included, including	INCL.
inch(es)	IN. or “
inside diameter	I.D.
inside face	I.F.
interior	INT.
intermediate	INTERM.
interstate	I
invert	INV.

J

joint	JT.
junction	JCT.

K

kilometer(s)	KM.
kilopounds	KIPS, K.

L

layout	LO
left	LT.
length of curve	L.C.
linear feet	L.F.
longitudinal	LONGIT.
lump sum	L.S.

M

maintenance	MAINT.
malleable	MALL.
manhole	MH
manufacturer	MFR.
maximum	MAX.
mean high water	MHW
mean higher high water	MHHW
mean low water	MLW
mean lower low water	MLLW
meters	M.

mile(s)	MI.
miles per hour	MPH
millimeters	MM.
minimum	MIN.
minute(s)	MIN. or ‘
miscellaneous	MISC.
modified	MOD.
monument	MON.

N

National Geodetic Vertical Datum 1929	NGVD 29
near face	N.F.
near side	N.S.
North	N.
North American Vertical Datum 1988	NAVD 88
Northbound	NB
not to scale	NTS
number; numbers	#, NO., NOS.

O

or	/
original ground	O.G.
ounce(s)	OZ.
outside diameter	O.D.
outside face	O.F.
out to out	O to O
overcrossing	O-XING
overhead	OH

P

page; pages	P.; PP.
pavement	PAV’T
pedestrian	PED.
per cent	%
pivot point	PP
Plans, Specifications and Estimates	PS&E
plate	ℙℒ or PL
point	PT.
point of compound curve	PCC
point of curvature	P.C.
point of intersection	P.I.
point of reverse curve	PRC
point of tangency	P.T.
point on vertical curve	PVC
point on horizontal curve	POC
point on tangent	POT
polyvinyl chloride	PVC
portland cement concrete	PCC
pound, pounds	LB., LBS., #
pounds per square foot	PSF, LBS./FT.^{2}, LBS./ ‘,or #/’

pounds per square inch	PSI, LBS./IN.^{2}, LBS./ “,or #/”
power pole	PP
precast	P.C.
pressure	PRES.
prestressed	P.S.
prestressed concrete pipe	P.C.P.
Puget Sound Power and Light	P.S.P.&L.
Q	
quantity	QUANT.
quart	QT.
R	
radius	R.
railroad	RR
railway	RWY.
Range	R.
regulator	REG.
reinforced, reinforcing	REINF.
reinforced concrete	RC
reinforced concrete box	RCB
reinforced concrete pipe	RCP
required	REQ’D
retaining wall	RET. WALL
revised (date)	REV.
right	RT.
right of way	R/W
road	RD.
roadway	RDWY.
route	RTE.
S	
seconds	SEC. or “
Section (map location)	SEC.
Section (of drawing)	SECT.
sheet	SHT.
shoulder	SHLD. or SH.
sidewalk	SW. or SDWK
South	S.
southbound	SB
space(s)	SPA.
splice	SPL.
specification	SPEC.
square foot (feet)	SQ. FT. or FT.^{2}
square inch	SQ. IN. or IN.^{2}
square yard	SY, SQ. YD. or YD.^{2}
station	STA.
standard	STD.
state route	SR
stiffener	STIFF.

stirrup	STIRR.
structure, structural	STR.
support	SUPP.
surface, surfacing	SURF.
symmetrical	SYMM.
T	
tangent	TAN. or T.
telephone	TEL.
temporary	TEMP.
test hole	T.H.
thick(ness)	TH.
thousand	M
thousand (feet) board measure	MBM
ton(s)	T.
total	TOT.
township	T.
transition	TRANS.
transportation	TRANSP.
transverse	TRANSV.
treatment	TR.
typical	TYP.
U	
ultimate	ULT.
undercrossing	U-XING
V	
variable, varies	VAR.
vertical	VERT.
vertical curve	V.C.
vitrified clay pipe	VCP
volume	VOL. or V
W	
water surface	W.S.
weight(s)	WT.
welded steel pipe	WSP
welded wire fabric	W.W.F.
West	W.
Willamette Meridian	W.M.
wingwall	W.W.
with	W/
without	W/O
Y	
yard, yards	YD., YDS.
year(s)	YR.

11.2 Bridge Standard Drawings

11.1-A4 Footing Layout

11.3 Appendices

Appendix 11.1-A1 Dimensional Callout Example

Appendix 11.1-A2 Typical Details

Appendix 11.1-A3 Typical Section Callouts

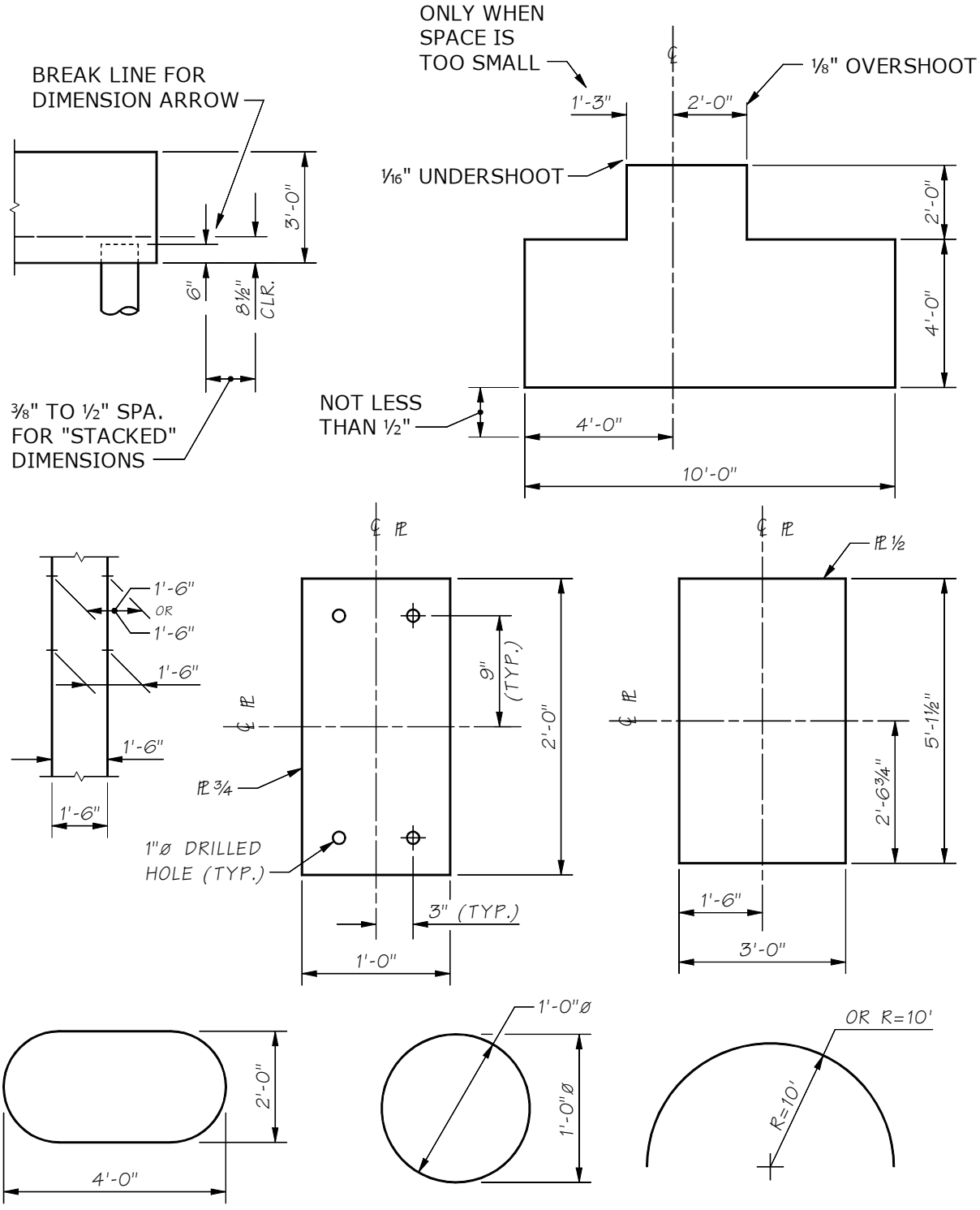
BREAK LINE FOR
DIMENSION ARROW
3'-0"
6"
8½"
CLR.
⅜" TO ½" SPA.
FOR "STACKED"
DIMENSIONS
ONLY WHEN
SPACE IS
TOO SMALL
1'-3"
2'-0"
⅛" OVERSHOOT
1/16" UNDERSHOOT
2'-0"
4'-0"
NOT LESS
THAN ½"
4'-0"
10'-0"
℄ PL
1'-6"
OR
1'-6"
1'-6"
1'-6"
1'-6"
PL ¾
1"ø DRILLED
HOLE (TYP.)
9"
(TYP.)
2'-0"
3" (TYP.)
1'-0"
PL ½
5'-1½"
2'-6¾"
1'-6"
3'-0"
2'-0"
4'-0"
1'-0"ø
1'-0"ø
OR R=10'
R=10'

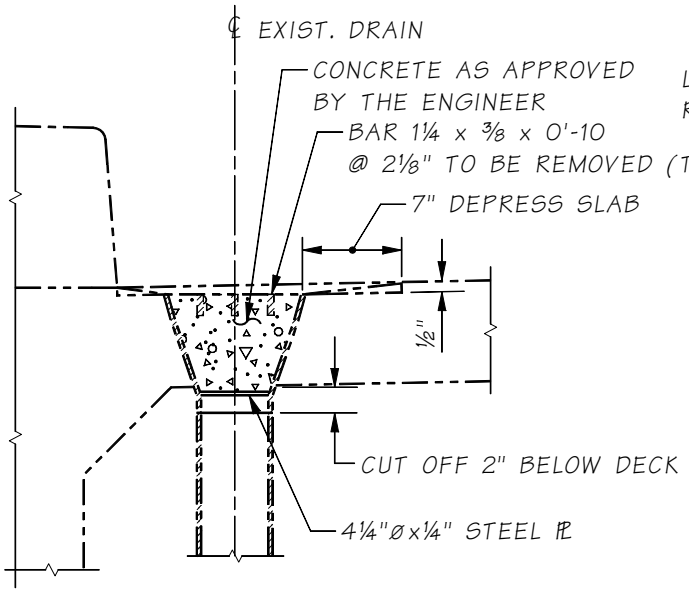

TYPICAL CONCRETE DETAIL

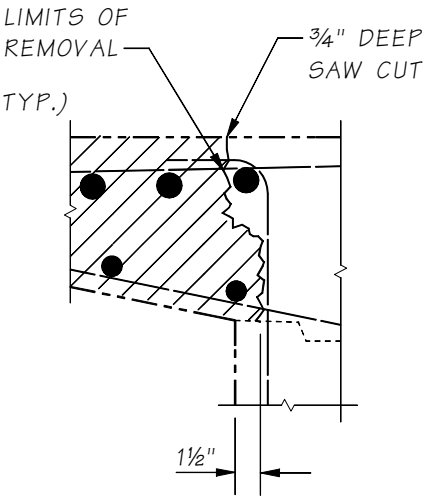

TYPICAL REMOVAL DETAIL

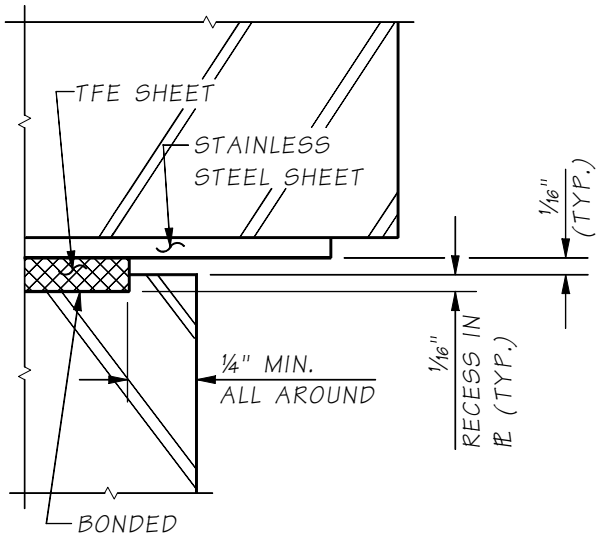

TYPICAL STEEL DETAIL

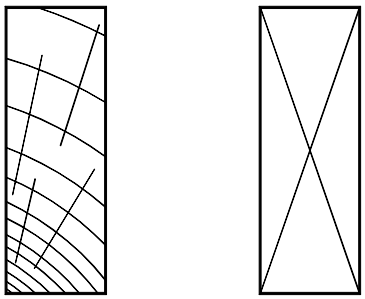

TYPICAL TIMBER DETAIL

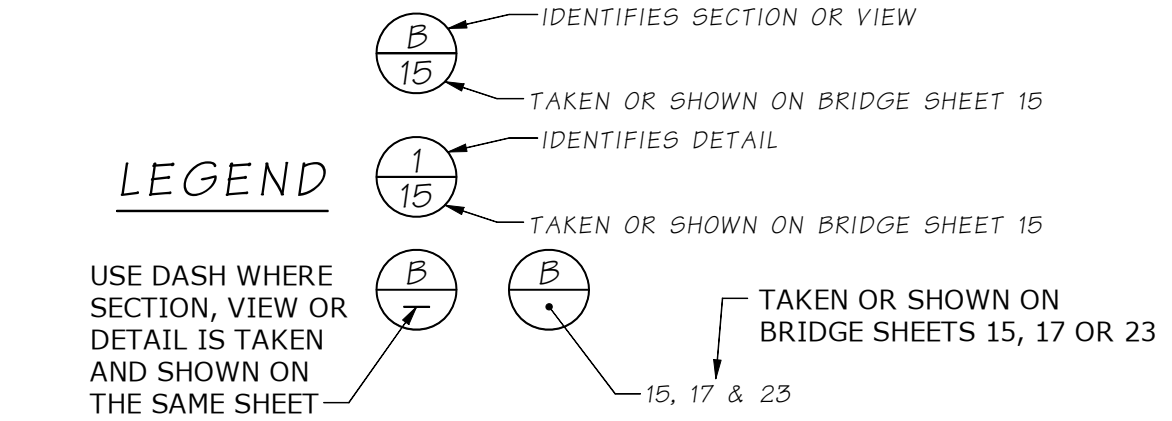
B
15
IDENTIFIES SECTION OR VIEW
TAKEN OR SHOWN ON BRIDGE SHEET 15
LEGEND
1
15
IDENTIFIES DETAIL
TAKEN OR SHOWN ON BRIDGE SHEET 15
USE DASH WHERE SECTION, VIEW OR DETAIL IS TAKEN AND SHOWN ON THE SAME SHEET
B
B
TAKEN OR SHOWN ON BRIDGE SHEETS 15, 17 OR 23
15, 17 & 23

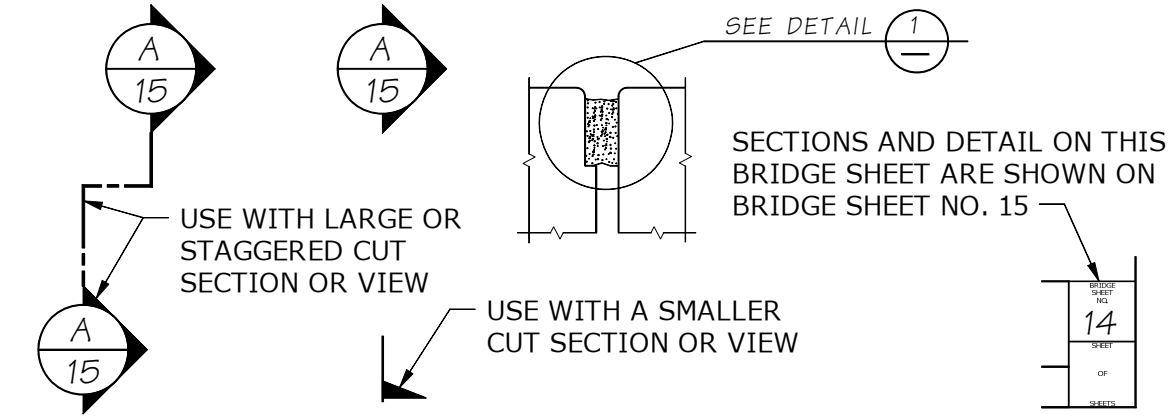
A
15
A
15
SEE DETAIL 1
SECTIONS AND DETAIL ON THIS BRIDGE SHEET ARE SHOWN ON BRIDGE SHEET NO. 15
USE WITH LARGE OR STAGGERED CUT SECTION OR VIEW
A
15
USE WITH A SMALLER CUT SECTION OR VIEW
BRIDGE SHEET NO.
14
SHEET
OF
SHEETS

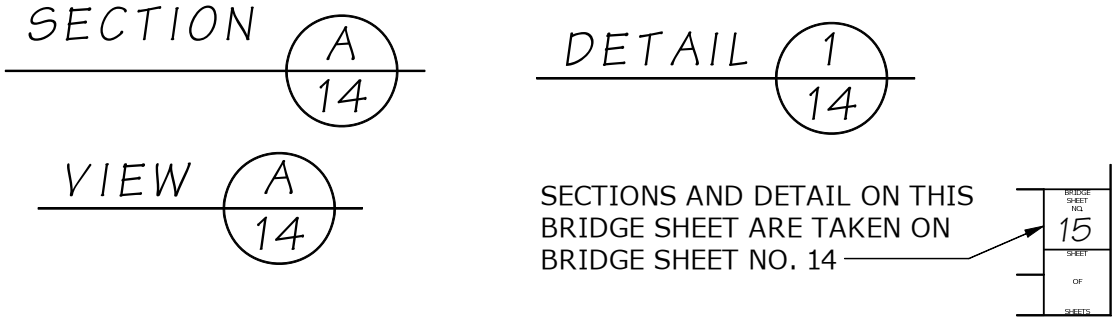
SECTION A 14
DETAIL 1 14
VIEW A 14
SECTIONS AND DETAIL ON THIS BRIDGE SHEET ARE TAKEN ON BRIDGE SHEET NO. 14
BRIDGE SHEET NO.
15
SHEET
OF
SHEETS

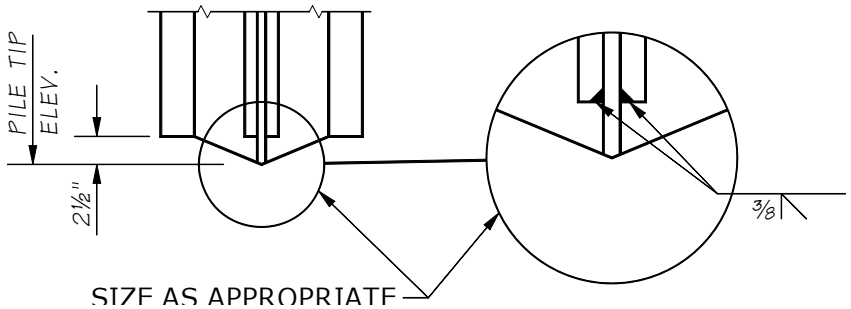
PILE TIP ELEV.
2½"
3/8
SIZE AS APPROPRIATE

Chapter 12 Quantities, Costs, and Specifications — Contents

12.1 Quantities - General . . . 12-1
12.1.1 Cost Estimating Quantities . . . 12-1
12.1.2 Not Included in Bridge Quantities List . . . 12-2

12.2 Computation of Quantities . . . 12-3
12.2.1 Responsibilities . . . 12-3
12.2.2 Procedure for Computation . . . 12-3
12.2.3 Data Source . . . 12-4
12.2.4 Accuracy . . . 12-4
12.2.5 Excavation . . . 12-4
12.2.6 Shoring or Extra Excavation, Class A . . . 12-7
12.2.7 Piling . . . 12-9
12.2.8 Conduit Pipe . . . 12-10
12.2.9 Private Utilities Attached To Bridge Structures . . . 12-10
12.2.10 Drilled Shafts . . . 12-11

12.3 Construction Costs . . . 12-12
12.3.1 Introduction . . . 12-12
12.3.2 Factors Affecting Costs . . . 12-12
12.3.3 Development of Cost Estimates . . . 12-13

12.4 Construction Specifications and Estimates . . . 12-16
12.4.1 General . . . 12-16
12.4.2 Definitions . . . 12-16
12.4.3 General Bridge S&E Process . . . 12-17
12.4.4 Reviewing Bridge Plans . . . 12-18
12.4.5 Preparing the Bridge Cost Estimates . . . 12-19
12.4.6 Preparing the Bridge Specifications . . . 12-20
12.4.7 Preparing the Bridge Working Day Schedule . . . 12-21
12.4.8 Reviewing Projects Prepared by Consultants . . . 12-21
12.4.9 Submitting the PS&E Package . . . 12-22
12.4.10 PS&E Review Period and Turn-in for AD Copy . . . 12-23

12.5 Appendices . . . 12-24
Appendix 12.1-A1 Not Included In Bridge Quantities List . . . 12-26
Appendix 12.2-A1 Bridge Quantities . . . 12-27
Appendix 12.3-A1 Structural Estimating Aids Construction Costs . . . 12-33
Appendix 12.3-A2 Structural Estimating Aids Construction Costs . . . 12-35
Appendix 12.3-A3 Structural Estimating Aids Construction Costs . . . 12-37
Appendix 12.3-A4 Structural Estimating Aids Construction Costs . . . 12-39
Appendix 12.3-B1 Cost Estimate Summary . . . 12-40
Appendix 12.4-A1 Special Provisions Checklist . . . 12-41
Appendix 12.4-A2 Structural Estimating Aids Construction Time Rates . . . 12-46
Appendix 12.4-B1 Construction Working Day Schedule . . . 12-48

Chapter 12 Quantities, Costs, and Specifications

12.1 Quantities - General

The quantities of the various materials and work items involved in the construction of a project that includes bridges and structures are needed for establishing the estimated cost of the project throughout the design process, and for establishing a basis for comparison of the contractor's bids.

12.1.1 Cost Estimating Quantities

Quantities for establishing cost estimates are often necessary during various stages of project development and are required at the completion of the Bridge PS&E. These quantities should be calculated from the best information available at the time, see Section 12.2.3. The policy regarding the preparation of quantity calculations is as follows:

A. Conceptual Stage

During the conceptual stage of a project, estimated quantities may be required to arrive at an estimated cost. The need for conceptual stage quantities will be determined by the Bridge Project Support Unit.

B. Preliminary Plan Stage

Upon completion of the preliminary plan, estimated quantities may be required to arrive at an estimated cost. The need for preliminary plan stage quantities will be determined by the Bridge Project Support Unit.

C. Design Stage

If requested, quantity calculations shall be made, reviewed, and submitted to the Bridge Project Support Unit by the Bridge Design Unit as the design progresses. The first submittal of estimated quantities shall be made as soon as the major dimensions of the structure are determined. As refinements in the design are made, quantities varying more than 10 percent from those previously submitted shall be resubmitted.

D. Final Contract Quantities

Upon completion of structural design and plans, the quantities of materials and work items involved in the construction of the project shall be computed,. See Sections 12.2.2 and 12.2.4.B.

12.1.2 Not Included in Bridge Quantities List

Items of work which appear in the bridge plan sheets, but for which details, specifications, and quantities are not included in the Bridge PS&E, shall be listed in the "Not Included in Bridge Quantities List" (WSDOT Form 230-038 and Appendix 12.1-A1). This list is required for every bridge, even if no items of work are shown in the Plans that are in this category. (In this case, fill out the bridge information at the top of the form and write "NONE" across the form.) This form is transmitted to the Region Design PE Office with all Preliminary Plan submittals, all Bridge PS&E distributions, and at various milestone points during the design process, to ensure that the responsibility for all PS&E items is clear. Particular care shall be taken in the preparation of this list as omissions can result in an incomplete project PS&E with missing information for work items, or conflicting overlapping information for work items.

12.2 Computation of Quantities

12.2.1 Responsibilities

A. Design Unit

The Design Unit is responsible for calculating quantities required for cost estimates for Preliminary Plans prepared in Design Units, calculating preliminary quantities at various milestones during the design process, and calculating quantities for the final Bridge PS&E. The Design Unit is responsible for notifying the Region Design PE Office and the Bridge Project Support Unit whenever structural design changes and alterations are made to the design features and quantities which affect the cost of the structure, especially following the distribution of the initial Preliminary Plan.

B. Bridge Project Support Unit

The Bridge Project Support Unit is responsible for computing quantities for conceptual stage cost estimates, and cost estimates for Preliminary Plans prepared in the Bridge Project Support Unit. The Bridge Project Support Unit is responsible for ensuring that the quantities listed in the AD Copy Bid Proposal correspond to those received from the Design Unit.

12.2.2 Procedure for Computation

Quantities are to be computed and checked independently. The designer/originator and checker shall separately summarize their calculated quantities on the Bridge Quantities Form 230-031 (See Appendix 12.2-A1) in the units shown thereon. The two summaries shall be submitted to the Design Unit Manager for comparison. The designer/originator and checker shall use identical breakdowns for each quantity. For example, the designer/originator's quantities for excavation for each of Piers 1, 2, and 3 should be compared separately against the corresponding quantities made by the checker.

When the desired accuracy, see Section 12.2.4, is achieved, a Manager's Bridge Quantities form shall be prepared and submitted to the Bridge Project Support Unit along with the Pre-Contract Review Bridge Plans review set. (This form is the same as previously mentioned except that it is labeled "Manager's Bridge Quantities" and is completed by the Design Unit Manager or designee. If the Design Unit Manager elects, the designer/originator's or the checker's Bridge Quantities form may be designated as "Supervisor's Bridge Quantities.") This form is used by the Bridge Project Support Unit to prepare the final bridge cost estimate.

All quantity calculations and bridge quantities forms are to be filed in the job file for the structure or the PS&E file for the project. All subsequent revisions shall be handled in the same manner as the original quantities. On the "Bridge Quantities" form, any revision to the original figure should not be erased but crossed out and replaced by the new figure using a different colored pencil. If there are too many revisions, the old summary sheet should be marked void, left in the file, and a new sheet made out, marked "Revised," dated, and the original forwarded to the Bridge Project Support Unit.

Mistakes in quantities can be very costly to Contracting Agency. The designer/originator and checker must account for all items of work on the "Bridge Quantities" form, and must also be careful to enter an item of work only once (e.g., concrete or steel rebar in the superstructure should not be entered both in the lump sum superstructure breakdown and in the unit bid item quantity).

12.2.3 Data Source

Quantities of materials for use in preliminary cost estimates can often be obtained from the quantities calculated for previous similar designs. This information is available from the Bridge Project Support Unit.

12.2.4 Accuracy

A. Preliminary Quantities

Quantities used for cost estimates prepared during the conceptual stage of the design are expected to have an accuracy of ± 10 percent. The first iteration of quantities, after the preliminary plan has been completed, is expected to have an accuracy of ± 5 percent.

B. Final Quantities

Final quantities in the Bridge PS&E submittal, including bar list quantities, to be listed in the Special Provisions and Bid Proposal sheet of the AD Copy, are to be calculated to have an accuracy of ± 1 percent.

12.2.5 Excavation

A. Structure Excavation, Class A

Excavation necessary for the construction of bridge piers and reinforced concrete retaining walls is classified as Structure Excavation, Class A (see the definition as specified in *Standard Specifications* Section 2-09.3(2)). Payment for such excavation is generally by volume measurement. The quantity of excavation to be paid for is measured as specified in *Standard Specifications* Section 2-09.4, and computation of this quantity shall conform to these specifications. If the construction circumstances for the project require structure excavation limits that do not conform to the *Standard Specifications* definition, then the modified structure excavation limits shall be shown in details in the Plans.

Structure excavation for footings and seals shall be computed using a horizontal limit of 1 foot 0 inches outside and parallel to the neat lines of the footing or seal or as shown in the Plans. The upper limit shall be the ground surface or stream bed as it exists at the time the excavation is started. See Figure 12.2.5-1(A), (B), and (C).

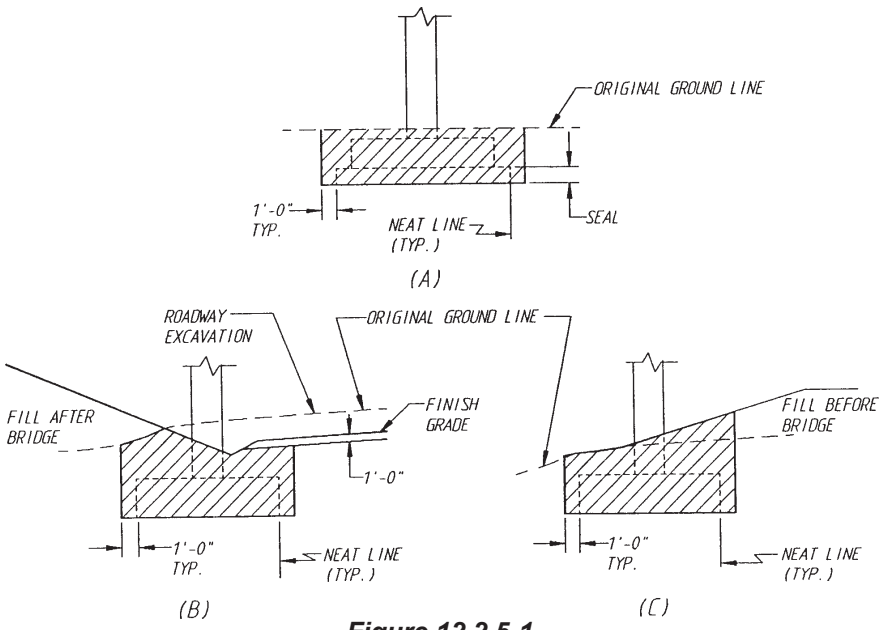

Figure 12.2.5-1

Structure excavation for the construction of wing walls shall be computed using limits shown in Figure 12.2.5-2.

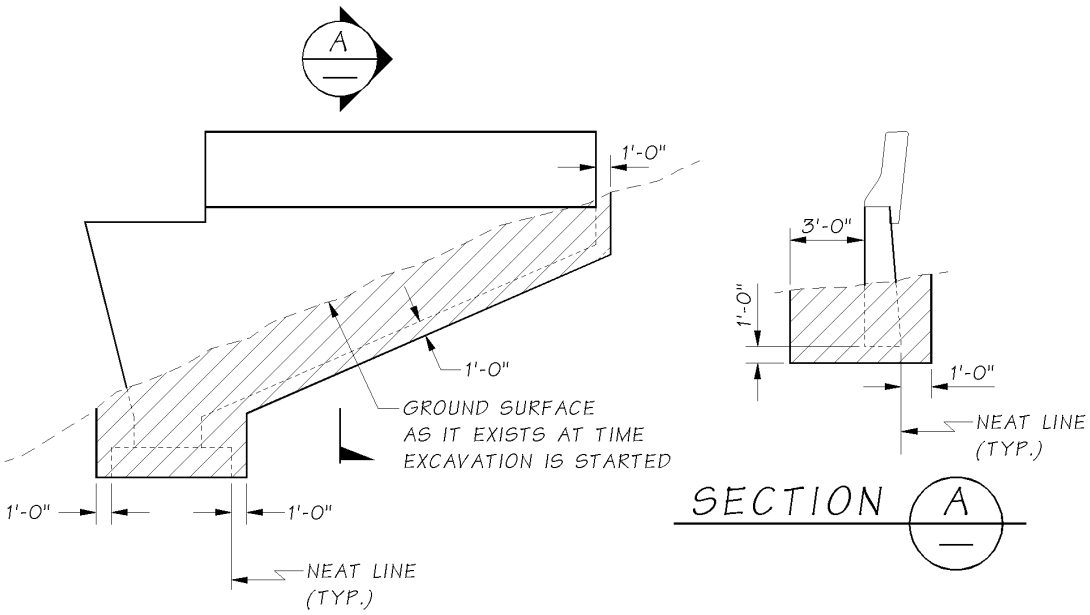

Figure 12.2.5-2

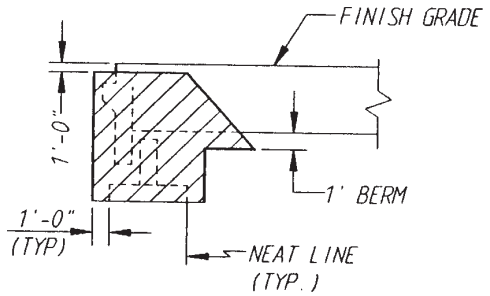

Figure 12.2.5-3

When bridge approach fills are to be constructed in the same contract as the bridge, and the foundation conditions do not require full height fills to be placed prior to the construction of the pier, the approach fill is constructed in two stages, i.e., constructed up to the bottom of footing or 1 foot above the bottom of footing, and then completed after the bridge construction. (The Materials Laboratory Geotechnical Services Branch shall be consulted on the staging method.) The structure excavation shall be computed from the top of the first stage fill.

The bottom of a spread footing will be placed 1 foot 0 inches below the top of the first stage fill. See Figure 12.2.5-4(A). The bottom of footings supported on piling will be placed at the top of the first stage fill; therefore no structure excavation is required (see Figure 12.2.5-4(B)).

The limits for stage fills shall be shown in the Plans with the structure excavation, if any.

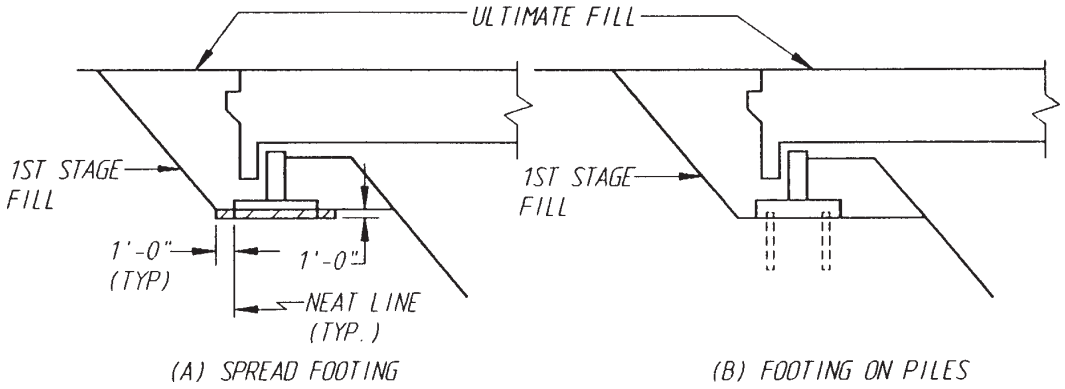

Figure 12.2.5-4

Prior to pier construction, when (1) a full height fill with or without surcharge is required for settlement, or (2) the original ground line is above the finish grade line, the upper limit of structure excavation shall be computed to 1 foot 0 inches below the finish grade (pavement) line (see Figure 12.2.5-5).

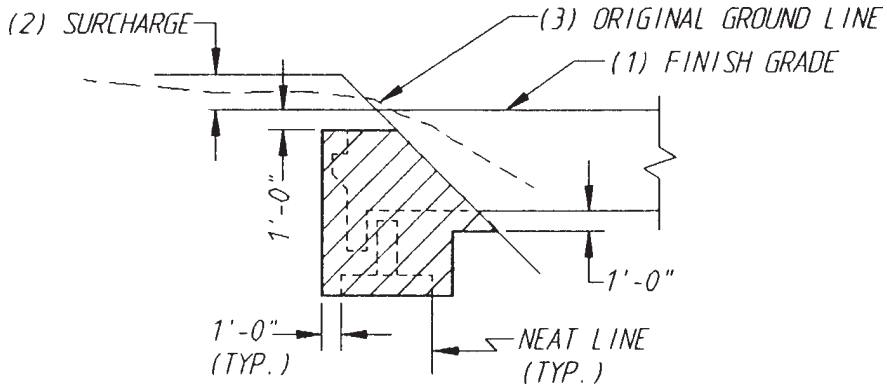

Figure 12.2.5-5

B. Special Excavation

The excavation necessary for placement of riprap around bridge piers is called Special Excavation (see Figure 12.2.5-6).

Special excavation shall be computed from the top of the seal to the existing stream bed or ground line along the slopes indicated in the Plans. Special excavation will only include excavation outside the limits of structure excavation.

The limits for special excavation shall be shown in the Plans.

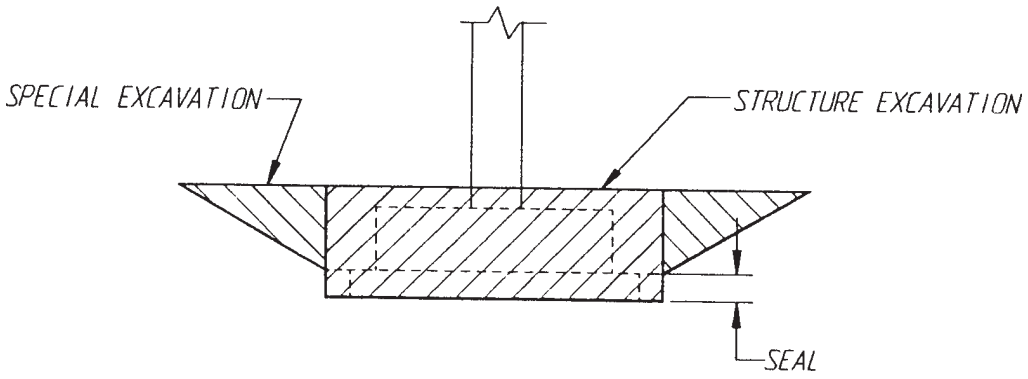

Figure 12.2.5-6

12.2.6 Shoring or Extra Excavation, Class A

Shoring, cofferdams or caissons, or extra excavation required for construction of bridge footings and reinforced concrete retaining walls constructed in the wet or dry is classified as Shoring or Extra Excavation, Class A. See *Standard Specifications* Section 2-09.3(3).

Structural shoring (for dry excavation) or cofferdams (for wet excavation) is required for all excavations near completed structures (foundations of bridges, walls, or buildings), near underground utilities, near railroad tracks, and near pavement. All other excavation four feet or more in depth shall be either shored with structural shoring or cofferdams, or shall meet the open-pit excavation requirements as specified in *Standard Specifications* Section 2-09.3(3)B.

For the purpose of estimating the cost for shoring or extra excavation, Class A, it is necessary to compute the peripheral area of an assumed sheet pile enclosure of the excavated area.

While payment for Shoring or Extra Excavation, Class A, is made at a lump sum contract price, the costs are a function of the overall height of excavation. In general, each side of the excavation for each pier shall be categorized into an average overall height range as shown on WSDOT Form 230-031 (i.e., less than 6 feet, 6 to 10 feet, 10 to 20 feet, or greater than 20 feet), the area for the side computed using the appropriate width times the average overall height, the overall area for the side shall be entered in the category that matches the side's average overall height. These calculations are required for each pier of the bridge as applicable. See accompanying Figure 12.2.6-1 and sample calculation.

For excavation in the dry, the peripheral area shall be the perimeter of the horizontal limits of structure excavation times the height from the bottom of the footing to the ground surface at the time of excavation.

For excavation in water, the peripheral area shall be the perimeter of the horizontal limits of structure excavation times the height from the bottom of the seal to 2 feet above the seal vent elevation.

For shaft-type excavations, it is not normally necessary to compute the area for shoring because the shoring is usually accommodated by the work items for permanent casing, temporary casing, and casing shoring.

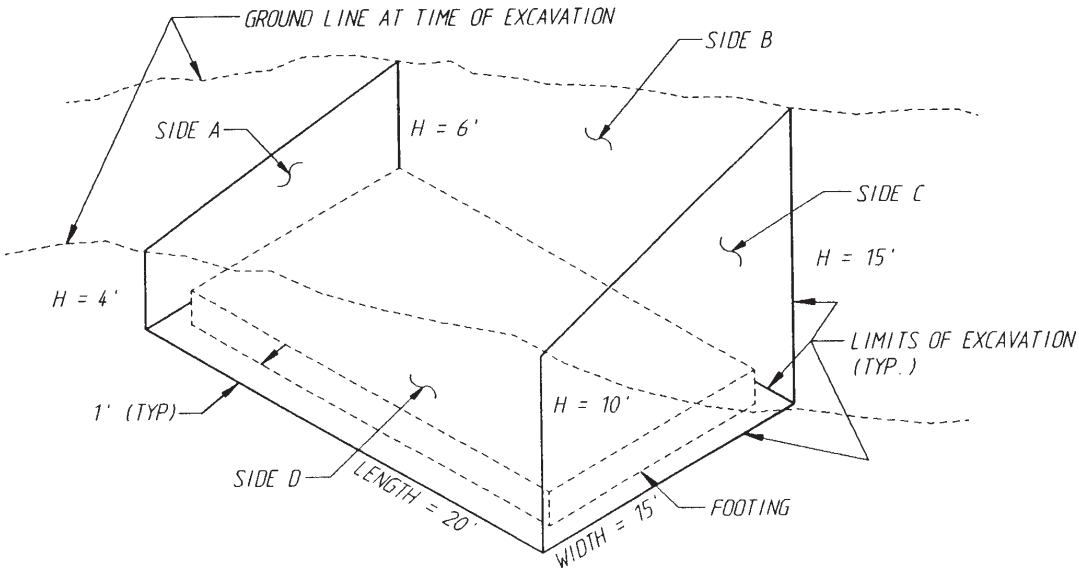

Figure 12.2.6-1

Sample Calculation:

For this pier (Figure 12.2.6-1):

Side A: average height = (4 + 6)/2 = 5 feet
width = 15 feet
area = 5 X 15 = 75 square feet

Side B: average height = (6 + 15)/2 = 10.5 feet
width = 20 feet
area = 10.5 X 20 = 210 square feet

Side C: average height = (10 + 15)/2 = 12.5 feet
width = 15 feet
area = 12.5 X 15 = 187.5 square feet

Side D: average height = (4 + 10)/2 = 7 feet
width = 20 feet
area = 7 X 20 = 140 square feet

For this example

Height Category	Area
less than 6 feet	75 square feet
6 feet to 10 feet	140 square feet
10 feet to 20 feet	210 + 188 = 398 square feet
greater than 20 feet	N.A.

These numbers would be entered on WSDOT Form 230-031 as follows:

Standard Item Number 4012	Item Use Standard Item	Item Description Shoring or Extra Excavation, Class A Dry: Average Overall Height	Quant. (Enter Total for Bridge Here)	Unit of Meas. L.S.
Pier	6 ft	6 ft to 10 ft	10 ft* to 20 ft	20 ft S.F.
Example	75 S.F.	140 S.F.	398 (11.5*) S.F.	— S.F.
	S.F.	S.F.	S.F.	S.F.
	S.F.	S.F.	S.F.	S.F.
	S.F.	S.F.	S.F.	S.F.

* Indicate Average Height

12.2.7 Piling

The piling quantities are to be measured and paid for in accordance with *Standard Specifications* Sections 6-05.4 and 6-05.5. Computation of piling quantities shall follow the same provisions.

Timber test piles are driven outside the structure limits and are extra or additional piling beyond the required number of production piling. See *Standard Specifications* Section 6-05.3(10).

Concrete or steel test piles are driven within the structure limits and take the place of production piling. In this case, the quantity for number and length of production piling is reduced by the number and length of test piling.

The quantity for "Furnishing _____ Piling _____" is the linear measurement of production piling below cut-off to the "estimated" pile tip (not "minimum" tip) specified in the Geotechnical report. (Does not include test piles.)

The quantity for "Driving _____ Pile _____" is the number of production piling driven. (Does not include test piles.)

Pile tips are required if so specified in the Geotechnical report. The tips on the test piles are incidental to the test pile; therefore, the number of pile tips reported on the Bridge Quantities Form 230-031 should not include the number of pile tips required on the test piles.

12.2.8 Conduit Pipe

It is WSDOT practice to embed two 2-inch diameter conduit pipes in all exterior concrete barriers constructed on bridges and retaining walls. The only exceptions to this practice are inside barriers of side-by-side twin bridges, and other project specific locations with the approval of the Bridge Design Engineer. Only WSDOT electrical systems may use these conduit pipes. Conduit pipes for other private utilities cannot be embedded in structure elements, and must be otherwise suspended or attached to the structure, in accordance with the franchise lease agreement negotiated between the private utility and the Region's Utility Engineer.

In accordance with *Standard Specifications* Section 8-20.1(1) and RCW 19.28.161, conduit pipe installation work is considered electrical work that can only be performed by licensed electricians. As such, conduit pipe quantities can only be included in electrical work bid items, such as electrical lump sum bid items for "Illumination System", "Traffic Signal System", and "Communication System", or stand-alone unit contract bid items for "Conduit Pipe 2 In. Diam." Conduit pipe quantities **cannot** be made incidental to structural bid items such as "Superstructure", "Traffic Barrier", "Pedestrian Barrier", etc.

For bridges and retaining walls in projects that also include other electrical system work for illumination, traffic signals, and ITS systems, the conduit pipes and their associated junction boxes shall be included in the lump sum bid item cost estimates for the appropriate electrical system lump sum bid item.

For bridge and retaining walls in projects without any electrical system work (e.g., the conduit pipes are isolated and will exist initially as spares), the conduit pipe quantity shall be calculated for "Conduit Pipe 2 In. Diam", per linear foot. The measurement shall be the sum of all conduit pipe through the barriers and into the ground mounted junction boxes buried off the ends of the bridge corners as shown in the traffic barrier standard details. Each conduit pipe shall terminate in a separate junction box as shown in these details.

12.2.9 Private Utilities Attached To Bridge Structures

As mentioned above, conduit pipes for private utilities cannot be embedded in structure elements, and must be otherwise suspended or attached to the structure, in accordance with the franchise lease agreement negotiated between the private utility and the Region's Utility Engineer.

Because attachment of private utilities to bridge structures are subject to franchise lease agreements, the construction costs for furnishing and installing these utilities, including all associated supports, need to be kept separate from other bid items. The only portion of the utilities and their supports that can be made incidental to structure bid items, such as "Superstructure" and "Bridge Deck" are the concrete inserts cast into the deck slab of the bridge. All other quantities for the private utilities, including the support rods, braces, and conduit pipes, shall be included in the associated bid item(s) established for each separate private utility, whether as a lump sum bid item, or measured by linear measurement. These separate bid item(s) for these private utilities are the responsibility of the Design PE Office.

The same practice applies to WSDOT conduit pipes when such conduit pipes for ITS or other systems are suspended or attached to the structure. Other than the concrete inserts for support of such WSDOT conduit pipes, all other quantities for external WSDOT conduit pipe systems shall be included in the appropriate WSDOT electrical system lump sum bid item, under the responsibility of the Design PE Office or the Region Traffic Design Office.

12.2.10 Drilled Shafts

Constructing shafts is measured by the linear foot. The linear measurement is calculated using the top of shaft elevation and the bottom of shaft elevation for each shaft as shown in the Plans. This quantity covers all elements of shaft construction (including excavation and casing and access tubes for non-destructive QA testing of shafts) except for rock excavation and shaft QA testing as outlined below.

Rock excavation for shaft including haul is measured by the cubic yards of shaft excavated. The cubic yards shall be calculated based on the shaft diameter shown in the Plans, the top of rock line, defined as the highest bedrock point within the shaft diameter, and the bottom of shaft elevation shown in the Plans. Shaft QA test is measured once for each shaft tested. For establishing bid item quantities for the Proposal, it is always assumed that each shaft will be eligible for testing, so the quantity becomes one for each shaft in the project.

12.3 Construction Costs

12.3.1 Introduction

The construction costs itemized in Appendix 12.3-A1, 12.3-A2, 12.3-A3, and 12.3-A4 are to aid the user in estimating the cost of bridge and structure projects. The costs are based on historical data maintained by the Bridge and Structures Office and retrieved from recent WSDOT Contracts.

Requests for cost estimates from WSDOT Region Offices and other Local Agency offices should be submitted in writing (hard copy or email) to the Bridge Project Support Unit, and a written or email response will be returned within a reasonable time based on the schedule needs of the requesting office. Scoping or prospectus type cost estimates, and other cost estimates based upon deck area cost history and other readily available geotechnical information and project parameters can be prepared relatively quickly. Estimates requiring input from the Bridge Design Unit, either for preparation of preliminary quantities or other preliminary structural analysis will take longer to prepare.

Telephone requests for cost estimates from WSDOT Region Offices and other Local Agency Offices shall be referred to the Bridge Project Support Unit for response.

All cost estimates prepared by the Bridge and Structures Office should have the concurrence of the Bridge Project Support Engineer.

12.3.2 Factors Affecting Costs

A. Type of Structure

Many factors, as outlined in Section 2.2.3, must be considered in the selection of the type, size, and location of a bridge or wall.

Common structures with conventional details will be within the low end and mid-range of costs. Unique or complex structures will be within the high end.

B. Location of Project Site

Projects in remote areas or with difficult access will generally be within or above the high end of the cost range.

C. Size of Project Contract

Small projects tend to be within the high end of the cost range while large projects tend to be within the low end of the cost range.

D. Foundation Requirements

Foundation requirements greatly affect costs. Water crossings requiring pier construction within the waterway are generally very expensive. Scour requirements can push the costs even higher. The earlier foundation information can be made available the more accurate the cost estimate will be. The Bridge Project Support Unit should be made aware of unusual foundation requirements or changes to foundation type as soon as possible for updating of the estimate.

E. Sequencing of Project

Projects with stage construction, detours, temporary construction, etc., will be more expensive.

12.3.3 Development of Cost Estimates

Estimates prepared by the Bridge and Structures Office shall include 10 percent mobilization but not sales tax, engineering, construction contingencies, or inflation.

A. Types

1. Prospectus and Project Summary Estimates

Conceptual cost estimates are prepared when little information about the project is available. Use the construction costs in Appendix A, assuming the worst case conditions, unless actual conditions are known. An example of a worst case condition is deep foundation substructure (pile supported footings or shaft foundations). In remote areas, or for small projects, use the high end of the cost range. Use mid-range costs for usual conditions.

To cover unforeseen project modifications, add a 20 percent estimate contingency to a prospectus estimate and a 10 percent estimate contingency to a project summary estimate. These contingencies can be adjusted depending on the preliminary information available.

2. Preliminary Design Estimates

Preliminary design estimates are prepared during the preliminary design stage when the type and size of bridge is known. Limited foundation information is sometimes available at this stage. The construction costs in Appendix A shall be used with an appropriate inflation factor, assuming the worst case conditions, unless foundation conditions are known, along with a minimum of 10 percent contingency to cover scope creep.

3. Estimate Updates During Design

During the design period, the designer should keep the Bridge Project Support Unit informed of significant changes to the design that might affect the cost. Examples of significant changes are: deeper than expected footing and seals, use of deep foundations (shafts or piles) when none were previously expected, change of substructure types, and changes to superstructure. This is a critical element in the project budgeting process.

4. Contract Estimates

The contract estimate is prepared by the Bridge Project Support Unit after the Plans and Final Quantities have been submitted to the Bridge Project Support Unit for preparation of the final Bridge PS&E. The contract estimate is prepared using the quantities furnished by the Bridge Design Unit, unit bid prices from Appendix A, other historical data, and the judgment of the engineer preparing the estimate. Unique, one-of-a-kind projects require special consideration and should include an appropriate construction cost contingency.

B. Responsibilities

1. Bridge Project Support Unit

The Bridge Project Support Unit is responsible for preparing the prospectus, project summary, preliminary, and final contract estimates and updating the preliminary estimate as needed during the design phase of the project.

The Bridge Project Support Unit assists the WSDOT Region Offices and other outside Local Agency Offices, such as counties and cities, to prepare prospectus and project summary estimates when requested in writing.

2. Designer

The designer is responsible for providing preliminary quantities and final quantities to the Bridge Project Support Unit to aid in the updating of preliminary estimates and the preparation of contract estimates.

C. Documentation

Whenever a cost estimate is prepared by the Bridge and Structures Office for an outside office, a Cost Estimate Summary sheet (Appendix 12.3-B1) shall be filled out by the Engineer preparing the estimate. The Cost Estimate Summary shall be maintained in the Job File. During the design stage, the summary sheet shall be maintained by the Bridge Design Unit. At a minimum, the Cost Estimate Summary should list the initial and all subsequent cost estimates for each Preliminary Plan distribution made. It is the Design Unit Manager's responsibility to ensure the summary sheet is up to date when the job file is submitted to the Bridge Project Support Unit for preparation of the Bridge PS&E.

D. Cost Data

1. General

The Bridge costs summarized in Appendix A represent common highway, railroad, and water crossings. Consult the Bridge Project Support Unit for structures spanning across large rivers or canyons and other structures requiring high clearances or special design and construction features.

The square foot costs are useful in the conceptual and preliminary design stages when details or quantities are not available. The various factors affecting costs as outlined in Section 12.3.2 must be considered in selecting the square foot cost for a particular project. As a general rule, projects including none or few of the high-cost factors will be close to the mid-range of the cost figures. Projects including many of the high-cost factors will be on the high side. The user must exercise good judgment to determine reasonable costs. During the preliminary stage, it is better to be on the prudently conservative side for budgeting purposes.

2. Deck or Wall Face Area

The area to be used for cost estimates based upon deck or wall face area shall be computed as follows:

3. Bridge Widenings and New Bridges

The deck area of bridges is based on the actual width of the new portion of the bridge deck constructed (measured to the outside edge of the bridge deck) times the length, measured from end of wingwall to end of wingwall, end of curtain wall to end of curtain wall, or back to back of pavement seat if there are no wingwalls or curtain walls. Wingwalls are defined as walls without footings which are cast monolithically with the bridge abutment wall and may extend past the abutment footing. Curtain walls are defined as walls that are cast monolithically with the bridge abutment wall and footing and only extend to the edge of footing.

4. Bridge Rail Replacement

The bridge rail and curb removal is based on the total length of the rail and curb removed.

5. Bridge Lengths With Unequal Wingwalls

If a bridge has wingwalls or curtain walls of unequal length on opposite sides at a bridge end of wingwalls or curtain walls on one side of a pier only, the length used in computing the square foot area is the average length of the walls. If the wingwalls are not parallel to the centerline of the bridge, the measurement is taken from a projected line from the end of the wingwall normal to the centerline of the roadway.

6. Retaining Walls

If retaining walls (walls that are not monolithic with the abutment) extend from the end of the bridge, the cost of these walls is computed separately. The area of the wall is based on the overall length of the wall, and the height from the top of footing to the top of the wall.

12.4 Construction Specifications and Estimates

12.4.1 General

The Bridge Project Support Unit prepares the specifications and estimates (S&E) for all structural projects designed or reviewed by the Bridge and Structures Office. The preparation includes distributing review sets, reviewing the job file, plans, PS&E check list, "Not Included in Bridge Quantities List," and Geotechnical report; preparing the cost estimates, specifications, and working day schedules; and submitting the PS&E package to the Region.

12.4.2 Definitions

A. *Standard Specifications*

The *Standard Specifications* is published biannually by the WSDOT Engineering Publications Office, is maintained by the WSDOT Construction Office, and is used as the governing construction specification for all WSDOT construction projects.

B. Amendments

Amendments are revisions to specific sections of the *Standard Specifications*, which are approved and enacted during the two year period that a specific edition of the *Standard Specifications* is in force. Amendments are published normally three times during a calendar year – April, August, and December.

C. Special Provisions

Special Provisions are supplemental specifications and modifications to the *Standard Specifications*, including Amendments, which apply to a specific project.

D. Addendum

A written or graphic document, issued to all bidders and identified as an addendum prior to bid opening, which modifies or supplements the bid documents and becomes a part of the contract.

E. AD Copy

The AD copy is the contract document advertised to prospective bidders. The AD Copy may include, but not be limited to, the following as component parts: Bid Proposal Form, Special Provisions, Amendments, Plans, and Appendices including test hole boring logs, and environmental permit conditions.

F. As defined in *Standard Specifications* Section 1-02.4

The order of precedence of AD Copy components is as follows: Addenda, Bid Proposal Form, Special Provisions, Plans, Amendments, *Standard Specifications*, and *Standard Plans*.

12.4.3 General Bridge S&E Process

A. Typical Reviews and Milestone Dates

The Ad Date, as established by the Region, is the anchor for all project schedule dates.

The Bridge PS&E turn-in date is the date the Bridge PS&E package is due to the Region, and serves to note the beginning of the PS&E review period. Typically, the Bridge PS&E turn-in date is ten weeks prior to the scheduled Ad Date. When a longer PS&E review period is desired by the Region, the Bridge PS&E turn-in date can be as much as 12 to 14 weeks prior to the scheduled Ad Date.

The Bridge Plans (PS&E Presubmittal) turn-in date is the date the Bridge Plans are due to the Bridge Project Support Unit from the Bridge Design Unit or Bridge Consultant assigned to the project, and serves to note the beginning of the Bridge S&E preparation period. Typically, the Bridge Plans turn-in date is four weeks prior to the scheduled Bridge PS&E turn-in date.

For some projects, the Region may schedule Constructability Reviews at times prior to the scheduled Bridge Plans turn-in date. These Constructability Reviews typically include plan sheets as developed to date, and in some cases may include draft Special Provisions. For most of the few projects with Constructability Reviews, the coordination of submittals and reviews will be through the specific Bridge Design Unit involved. However, if the Constructability Review requires Special Provisions, the Bridge Project Support Unit should be included in the process.

For hydraulic, mechanical, and electrical rehabilitation projects for movable bridges, the Bridge Preservation Office takes a lead role in managing the design process for the project. These projects will typically include additional review periods similar to those described above for Constructability Reviews.

B. Bridge Plans Distribution

Once the Bridge Project Support Unit receives the Bridge Plans (PS&E Presubmittal) from the Bridge Design Unit or Bridge Consultant assigned to the project, the Bridge Scheduling Engineer will assign the project to a specific Bridge Specifications and Estimates Engineer, and will create a Bridge PS&E file for the project.

The Bridge Specifications and Estimates Engineer will distribute the Bridge Plans, along with a Not Included in Bridge Quantities List, under a cover letter addressed to the Region Design Project Engineer (Olympic and Northwest Regions) or Region Project Development Engineer (all other Regions). The distribution list also includes the FHWA Washington Division Bridge Engineer, WSDOT Bridge Construction Engineer, and the Region Project Development and Region Plans Engineer (except for Olympic Region).

For new bridges and bridge widenings, internal Bridge and Structures Office distribution includes the Bridge Design Engineer, and the Bridge Design Unit Manager. The Bridge Plans may be distributed to other offices such as the Materials Laboratory Geotechnical Services Branch and the Bridge Preservation Office depending on the scope of the project and the value of the added review.

The Bridge Plan distribution will specify a due date for the return of review comments to the Bridge Specifications and Estimates Engineer. This date is typically one week prior to the scheduled Bridge PS&E turn-in date, but can be modified to suit project specific schedule considerations.

C. Bridge PS&E Development

Following the distribution of the Bridge Plans, the Bridge Specifications and Estimates Engineer will review the Bridge Plans, develop the Bridge Special Provisions and Bridge Cost Estimate, and prepare the bridge working day schedule. See Sections 12.4.4, 12.4.5, 12.4.6, and 12.4.7.

D. Bridge PS&E Distribution

At the completion of the Bridge PS&E package, or at the scheduled Bridge PS&E turn-in date, whichever comes first, the Bridge Specifications and Estimates Engineer will distribute the Bridge PS&E. The Bridge PS&E package should include the items specified in Section 12.4.9.A, and should be distributed to those identified in Section 12.4.9.B.

12.4.4 Reviewing Bridge Plans

The Bridge Specifications and Estimates Engineer performs the following tasks after receiving the Bridge Plans submittal:

A. Job File

Review correspondence and emails in the job file for the items of work and other commitments which need to be included in the Bridge PS&E. Identify items that need special provisions and bid item references. Identify items that require additional research by, and information from, the bridge designer, Region designers, or others. Confirm that the job file fly leaf information has been completed by the designer (Form 221-076).

B. PS&E Check List (Form 230-037 and Appendix 12.4-A1)

Review the form as completed by the bridge designer for identified needs for special materials, construction requirements, permits, etc., which may need Special Provisions such as:

- Permits: United States Coast Guard
- Agreements: utilities on bridge, etc.
- Materials: high strength structural steel, high-strength concrete, polyester and polymer concrete, carbon fiber wrap, high-load elastomeric bearing pads and other high capacity bridge bearings, etc.
- Construction Requirements: temporary access, stage construction, construction over railroad, special welding and welding inspection requirements, and other special construction requirements
- Special Items: modified concrete overlay or special architectural, paint, and sealer treatments
- Proprietary Materials: identification of, and justification for use of, products and materials which are specified in the Bridge Plans by specific manufacturer and model, instead of generic manufacture

C. Summary of Quantities (Form 230-031 and Appendix 12.2-A1)

Verify that the Summary of Quantities is labeled as "Manager's Bridge Quantities." See Section 12.2.2. Quantities listed in this form are used to develop the Bridge Cost Estimate for the project.

D. Plans

Review the plans for consistency with the special needs identified by the bridge designer in the PS&E check list form (subsection B above), use of standard notes and General Notes, completeness of title block information, and use of terminology consistent with the *Standard Specifications*, *Standard Plans*, and Standard Bid Items.

E. Not Included in Bridge Quantities List (Form 230-038 and Appendix 12.1-A1)

Review the form completed by the bridge designer and compare with the Bridge Plans for items shownin the Bridge Plans that may be missing from the list. See Section 12.1.2.

F. Geotechnical Report

Review the Geotechnical Report for the project to confirm that the foundation types, sizes, and elevations shown in the Bridge Plans are consistent with the recommendations specified in the Geotechnical Report. Obtain a copy of the final Geotechnical Report for the S&E file. Review the Geotechnical Report for construction consideration requirements which may need to be noted in the Special Provisions, such as shaft casing requirements, bridge embankment settlement periods, special excavation, etc. Compare the number of test holes and the locations shown in the layout sheets for all bridges against number and locations of test holes identified in the final Geotechnical Report.

12.4.5 Preparing the Bridge Cost Estimates

A. General

From the quantities shown in the Summary of Quantities form submitted with the Bridge Plans, the Bridge Specifications and Cost Estimates Engineer develops the Bridge Cost Estimate for the project. The Bridge Project Support Unit uses a standard spreadsheet format for Cost Estimates. This spreadsheet includes the tabulation of all bridge bid items, a breakdown for each lump sum item, and square foot cost of the structure.

B. Procedure

Each quantity shown in the Summary of Quantities form is to be matched with an appropriate unit bid item or lump sum bid item. These can be Standard Bid Items from the Standard Bid Item Table, or project specific non-standard bid items.

Pricing for the bid items above can be based on the Construction Cost Estimating Aids listed in Appendices 12.3-A1, 12.3-A2, 12.3-A3, and 12.3-A4, bid tabulations from previous contracts, and the Unit Bid Analysis and Standard Item Table listing available through the WSDOT Contract Ad & Award Office web site. The Bridge Specifications and Estimates Engineer uses appropriate engineering judgment to make appropriate adjustments for inflation, site location, quantities involved, total of the work involved, etc.

All Standard Bid Items listed in the spreadsheet shall include the Standard Bid Item number assigned to that bid item. All non-standard bid items shall be identified by the appropriate pre-qualification code for the bid item work. The pre-qualification codes specified in the Standard Item Table should be reviewed to help establish the appropriate code for non-standard bid items. When in doubt, the general Bridge and Structures pre-qualification code of (B0) should be used.

All bridge cost estimates shall include mobilization, but do not include sales tax, engineering, contingencies or inflation.

12.4.6 Preparing the Bridge Specifications

A. General

There are two categories of Special Provisions:

1. General Special Provisions (GSP's) are supplemental specifications which are standardized and approved for Statewide use by the WSDOT Construction Office. The library of GSP's is maintained by the WSDOT Design Office. GSP's are formatted to supplement specific *Standard Specifications* Sections. GSP's are identified by their publication and effective date in parenthesis immediately preceding the GSP text. GSP's are published normally three times during a calendar year – April, August, and December.
2. Project Specific Special Provisions include all supplemental specifications which are not GSP's. Project Specific Special Provisions, as the name implies, are intended for project specific use, whether one time or infrequent. The vast majority of Project Specific Special Provisions are formatted to supplement specific *Standard Specifications* Sections. However, in rare cases, they can be formatted as "stand-alone" following the "**Description**/**Materials**/**Construction Requirements**/**Measurement**/**Payment** format. Project Specific Special Provisions are identified by six asterisks in parenthesis immediately preceding the text or heading. A Project Specific Special Provision that sees frequent use can be standardized and elevated to GSP status.

B. Procedure

Based on review of the Bridge Plans and the PS&E Check List, the Bridge Specifications and Estimates Engineer determines the items of work which are not already covered by the *Standard Specifications* and for which supplemental specifications are needed. Based on this determination, and review of the current list of Amendments, GSP's, a Bridge Special Provision runlist is prepared, listing the code numbers of the applicable Amendment and GSP documents needed for the project. Current Amendment and GSP documents are listed in the WSDOT Design Office Project Development web site.

These documents are listed following the section order of the *Standard Specifications*, Amendments first, followed by the Special Provisions. Fill-in blanks for GSP's requiring project specific information can be completed at this time.

When the *Standard Specifications*, Amendments and GSP's are insufficient to cover project specific requirements, Project Specific Special Provisions are developed, and added by name at the appropriate location in the runlist.

See the *Plans Preparation Manual* Division 6 for further discussion and example flow charts.

When the Bridge Special Provision file is complete with all Special Provisions needed to accompany the Bridge Plans, the Bridge Specifications and Estimates Engineer requests a single space document of the Bridge Special Provision file for use in the Bridge PS&E distribution.

12.4.7 Preparing the Bridge Working Day Schedule

A. General

The Bridge Specifications and Estimates Engineer calculates the number of the working days necessary to construct the bridge portion of the contract, based on the quantities shown in the Summary of Quantities form submitted with the Bridge Plans, and enters the time in the special provision "Time for Completion." The working days are defined in the *Standard Specifications* Section 1-08.5.

B. Procedure

The first task of estimating the number of working days is to list all the construction activities involved in the project. These include all actual construction activities such as excavation, forming, concrete placement, and curing; and the non-construction activities such as mobilization, material and shop plan approval. Special conditions such as staging, limited access near wetlands, limited construction windows for work in rivers and streams, limited working hours due to traffic and noise restrictions, require additional time.

The second task is to assign the number of working days to each construction activity above (see Appendix 12.4-A2). The "Construction Time Rate" table can be used as a guide to estimate construction time required. This table shows the average rate of output for a single shift, work day only. Adjustment to the rates of this table should be made based on project size, type of work involved, location of the project, etc. In general, larger project will have higher production rates than smaller projects, new construction will have higher production rates than widening, and unstaged work will have higher production rates than stages work.

The last step is to arrange construction activities, with corresponding working days, into a construction schedule on a bar chart, either by hand on the Construction Working Day Schedule Form 230-041 (see Appendix 12.4-B1) or by computer using a scheduling program. List the activities in a logical construction sequence, starting from the substructure to the superstructure. Items shall overlap where practical and the critical path shall be identified.

12.4.8 Reviewing Projects Prepared by Consultants

A. General

Consultants preparing Bridge Plans are required to submit their Pre-Contract Review Bridge Plans review set to the Bridge and Structures Office on or before the scheduled Bridge Plan (Pre-Contract PS&E Review) turn-in date, and with all associated information (files, forms, lists, and reports), as specified in Sections 12.4.3 and 12.4.4.

The package shall be in the same format as those prepared by the Bridge and Structures Office.

B. Procedure

The Bridge Specifications and Estimates Engineer reviews the consultant's Bridge Plans following the process as specified in Sections 12.4.3 and 12.4.4. The review comments of the Bridge Specifications and Estimates Engineer should be combined with review comments from the Bridge Design Unit assigned to review the project, and returned to the consultant in a timely manner through the Bridge Consultant Liaison Engineer, allowing the consultant to meet the scheduled turn-in date for the Bridge PS&E. After the consultant addresses all review comments and resubmits the package as 100 percent complete, the Bridge Specifications and Estimates Engineer compiles the Bridge PS&E package (See Section 12.4.9).

Except for hydraulic, mechanical, and electrical rehabilitation projects for movable bridges, and other unique bridge projects where specifically approved by the Bridge Project Support Engineer, all Bridge Special Provisions shall be prepared by the Bridge Project Support Unit. The Bridge Cost Estimate and working day schedule should be prepared by the Bridge Specifications and Estimates Engineer with assistance from the consultant as appropriate.

12.4.9 Submitting the PS&E Package

A. General

The PS&E package includes:

1. Cover transmittal memo to the Bridge Design Engineer (for new bridges and bridge widenings only)
2. Cover letter to the Region.
3. Bridge Construction Cost Estimate for each separate structure
4. Cost Estimate Summary for each separate structure (see Appendix 12.3-B1)
5. Not Included in Bridge Quantity List
6. Construction Working Day Schedule
7. Single space document of Bridge Special Provision file with runlist
8. Log of Test Borings
9. One Plan Set (11" by 17")

B. Procedure

The cover memorandum should be addressed to either the Region Plans Engineer (all Regions except for Olympic Region) or the Region Design Project Engineer (Olympic Region only). Others that should be included as cc's in the distribution are as follows:

1. FHWA Washington Division Bridge Engineer.
2. Region Design Project Engineer (except for Olympic Region – already addressed above).

3. Region Construction Project Engineer (if known and if different from the Region Design Project Engineer).
4. Northwest Region Area Engineering Manager (Northwest Region only).
5. Region Project Development Engineer (Eastern, North Central, South Central, and Southwest Regions only).
5. Bridge Construction Engineer.
6. Materials Laboratory.
7. Bridge Preservation Office.
8. Bridge Management Engineer (for all Bridge Replacement, Seismic Retrofit, and Bridge Repair projects).
9. All Bridge Design Unit Managers whose units contributed Bridge Plans to the project.
10. All bridge consultants who contributed Bridge Plans to the project.
11. Bridge Consultant Liaison Engineer (when bridge consultants contribute Bridge Plans to the project).

Modifications to the distribution list should be made by the Bridge Specifications and Estimates Engineer based on Region involved, and project specific requirements.

12.4.10 PS&E Review Period and Turn-in for AD Copy

A. Description

The PS&E Review Period between Bridge PS&E turn-in and Ad Date is used to allow the Region to compile PS&E from their Design PE Office and all support groups into a Review PS&E set that can be distributed to all interested parties for review and comment. The process ensures that all parts of the PS&E are compatible, complete, and constructible.

B. Procedure

Each Region has its own specific process, but the general procedure is similar. The Bridge and Structures Office review set is addressed to the Bridge Project Support Engineer. This occurs shortly after the Bridge PS&E turn-in date. Upon receipt in the Bridge and Structures Office, the Review PS&E set is delivered to the Bridge Specifications and Estimates Engineer assigned to the project. The review is to be performed, and comments returned to the Region, by the due date specified in the distribution letter. Review comments should be returned to both the Region Plan Reviewer and the Region Design PE contact assigned to the project, as identified in the distribution letter.

Depending on the scope of the project, and the Region responsible for the project, there may be a meeting to discuss review comments. If such a meeting is held (generally about halfway through the PS&E review period), the Bridge Specifications and Estimates Engineer and others from the Bridge Design Unit responsible for the project, should consider attending if discussion of Bridge PS&E review comments is likely.

Shortly after the specified due date for review comments passes, Region comments on the Bridge PS&E should be received by the Bridge Specifications and Estimates Engineer and/or the bridge designer(s) in the Bridge Design Unit. These review comments on the Bridge PS&E should be addressed before the final Bridge PS&E is turned-in for AD Copy printing. The Bridge Specifications and Estimates Engineer makes all necessary revisions to the Bridge Cost Estimate and Bridge Special Provisions, and notifies the appropriate contacts in the Region Design PE Office and the Region Plans Office when these changes are complete. This should be completed at least two weeks prior to the scheduled Ad Date.

After the Bridge Design Unit has completed all necessary revisions to the Bridge Plans, the Bridge Plans are signed and dated in blue ink by the appropriate engineers, and the signed originals turned in to the Bridge Specifications Engineer. Copies of these signed plans are sent to the Region for use in the AD Copy PS&E. This should be completed one to two weeks prior to the scheduled Ad Date. The original signed plans are forwarded to the Bridge Plans Engineer in the Bridge Project Support Unit.

12.5 Appendices

Appendix 12.1-A1	Not Included In Bridge Quantities List
Appendix 12.2-A1	Bridge Quantities
Appendix 12.3-A1	Structural Estimating Aids Construction Costs
Appendix 12.3-A2	Structural Estimating Aids Construction Costs
Appendix 12.3-A3	Structural Estimating Aids Construction Costs
Appendix 12.3-A4	Structural Estimating Aids Construction Costs
Appendix 12.3-B1	Cost Estimate Summary
Appendix 12.4-A1	Special Provisions Checklist
Appendix 12.4-A2	Structural Estimating Aids Construction Time Rates
Appendix 12.4-B1	Construction Working Day Schedule

Appendix 12.1-A1 Not Included In Bridge Quantities List

Washington State Department of Transportation
Environmental And Engineering Service Center
Bridge and Structures Office

Not Included In Bridge Quantities List

SR	Job Number	Project Title	
Designed By	Checked By	Date	Supervisor
Type of Structure			

The following is a list of items for which the Bridge and Structures Office is relying on the Region to furnish plans, specifications and estimates.

1.
2.
3.
4.
5.
6.
7.
8.
9.
10.
11.
12.
13.
14.
15.
16.
17.

DOT Form 230-038 EF
Revised 2/97

Washington State Department of Transportation

Bridge Quantities

Bridge No. _____ Date _____

St. Item No.	Item Use	Item Description	Quantity	Unit of Measure
0001	Std. Item	Mobilization	_____	L.S.
0061	Std. Item	Removing Portion of Existing Bridge	_____	L.S.
0061		Type _____ Area SF/SM _____		
		Drilled Holes: Less than 12" long: Greater than 12" long:		
		Number **Diameter** **Number** **Diameter** **Length**		
		_____ _____ Inch _____ _____ Inch _____ LF		
		_____ _____ Inch _____ _____ Inch _____ LF		
		_____ _____ Inch _____ _____ Inch _____ LF		
		Core Drilled Holes: *Less than 12" long*: *Greater than 12" long:*		
		Number **Diameter** **Number** **Diameter** **Length**		
		_____ _____ Inch _____ _____ Inch _____ LF		
		_____ _____ Inch _____ _____ Inch _____ LF		
		_____ _____ Inch _____ _____ Inch _____ LF		
0071	Std. Item	Removing Existing Bridge	_____	L.S.
		Type _____ Area _____ SF		
0259	GSP Item	Work Access	_____	L.S.
		Type _____ Area _____ SF		
4001	GSP Item	Temporary Bridge	_____	L.S.
		Type _____ Area _____ SF/SM		
4006	Std. Item	Structure Excavation Class A Incl. Haul	_____	CY
		Dry (includes unsuitable if specified by Geotech Report		
		Pier **Soil**		
		_____ _____ CY		
		_____ _____ CY		
		_____ _____ CY		
		_____ _____ CY		
		Cofferdam:		
		Pier **Soil** **Rock**		
		_____ _____ CY _____ CY		
		_____ _____ CY _____ CY		
		_____ _____ CY _____ CY		
		_____ _____ CY _____ CY		
4010	Sp. Prov.	Special Excavation	_____	CY
		Pier **Soil**		
		_____ _____ CY		
		_____ _____ CY		
		_____ _____ CY		
		_____ _____ CY		

DOT Form 230-031
Revised 05/2017

Page 1 of 5

St. Item No.	Item Use	Item Description	Quantity	Unit of Measure
4013	Std. Item	Shoring or Extra Excavation Class A	_____	L.S.
		Dry:		
		AVERAGE OVERALL HEIGHT		
		Pier **<6 ft.** **6 ft. to 10 ft** **10 ft. to 20 ft*.** **>20 ft.***		
		_____ _____ SF _____ SF _____ SF _____ SF		
		_____ _____ SF _____ SF _____ SF _____ SF		
		_____ _____ SF _____ SF _____ SF _____ SF		
		_____ _____ SF _____ SF _____ SF _____ SF		
		COFFERDAM: AVERAGE OVERALL HEIGHT		
		PIER **<6 ft.** **6 ft. to10 ft** **0 ft. to 20 ft.*** **>20 ft.**		
		_____ _____ SF _____ SF _____ SF _____ SF		
		_____ _____ SF _____ SF _____ SF _____ SF		
		_____ _____ SF _____ SF _____ SF _____ SF		
		_____ _____ SF _____ SF _____ SF _____ SF		
		*INDICATE AVERAGE HEIGHT		
7070	GSP Item	Rock Bolt	_____	Each
7071	GSP Item	Rock Dowel Type	_____	Each
4008	Std. Item	Rock Excavation For Shaft Including Haul	_____	CY
Varies	Std. Item.	Constructing _____ FT. Diam. Shaft	_____	LF
Varies	Std. Item	Shaft - _____ In. Diameter		LF
4053	Std. Item	Furnishing Soldier Pile		LF
4160	Std. Item.	QA Shaft Test	_____	Each
0256	Sp. Prov.	Removing Shaft Obstructions	_____	Est.
Varies	GSP Item	Preboring For _____ Pile	_____	LF
4060	Std. Item	Furnishing and Driving Concrete Test Pile	_____	Each
4070	Std. Item	Furnishing Conc. Piling - _____ Diameter	_____	LF
4080	Std. Item	Driving Conc. Pile		
4085	Std. Item	Furnishing and Driving Steel Test Pile	_____	Each
4090	Std. Item	Furnishing Steel Piling	_____	FM
4095	Std. Item	Driving Steel Pile	_____	Each
4100	Std. Item	Furnishing and Driving Timber Test Pile	_____	Each
4105	Std. Item	Furnishing Timber Piling - Untreated	_____	LF
4107	Std. Item	Furnishing Timber Piling _____	_____	LF
4108	Std. Item	Driving Timber Pile - Untreated	_____	Each
4111	Std. Item	Driving Timber Pile _____	_____	Each
4116	Std. Item	Pile Splice - Timber	_____	Each
8376	Std. Item	Furnishing Steel Pile Tip or Shoe	_____	Each
4130	Std. Item	Placing Prestressed Hollow Concrete Pile _____	_____	Each
4140	Std. Item	Driving Prestreessed Hollow Concrete Pile _____	_____	
--	Sp. Prov.	Pile Loading Test	_____	LF
		No. of Tests Each _____ Pile Size _____ Ton/Tonne		
4144	Std. Item	Epoxy-Coated St. Reinf. Bar For _____	_____	LB
4148	Std. Item	Epoxy-Coated St. Reinf Bar For Bridge	_____	LB
4149	Std. Item	St. Reinf. Bar For Bridge	_____	LB
4151	Std. Item	St. Reinf Bar for _____	_____	LB

DOT Form 230-031
Revised 05/2017

Page 2 of 5

St. Item No.	Item Use	Item Description	Quantity	Unit of Measure
4151	Std. Item	St. Reinf Bar for _____	_____	LB
--	Sp. Prov.	Wire Mesh _____	_____	SY
4166	Std. Item	Lean Concrete _____	_____	CY
--	Std. Item	Conc. Class _____	_____	CY
4322	Std. Item	Conc. Class 4000 for Bridge	_____	CY
4202	Std. Item	Conc. Class 4000 for _____	_____	CY
4200	Std. Item	Conc. Class 3000 for _____	_____	CY
4325	Std. Item	Conc. Class 5000 for Bridge	_____	CY
4205	Std Item	Conc. CLass 5000 for _____	_____	CY
4324	Std. Item	Conc. Class 4000W for Bridge	_____	CY
4204	Std. Item	Conc. Class 4000W for _____	_____	CY
--	GSP Item	Conc. Class EA	_____	CY
--	SP Prov.	Conc. Class HE	_____	CY
--	GSP Item	Fractured Fin Finish	_____	SY
4230	Std. Item	Structural Carbon Steel	_____	LB
4235	Std. Item	Structural Low Alloy Steel	_____	LB
4240	Std. Item	Structural High Strength Steel	_____	LB
4246	Std. Item	Cast Steel	_____	LB
4251	Std. Item	Forged Steel	_____	LB
4256	Std. Item	Cast Iron	_____	LB
4261	Std. Item	Malleable Iron	_____	LB
4267	Std. Item	Ductile Iron	_____	LB
4271	Std. Item	Cast Bronze	_____	LB
4299	Std. Item	Lagging	_____	SF
4280	Std. Item	Timber and Lumber - Untreated	_____	MBM
4282	Std. Item	Timber and Lumber - Creosote Treated	_____	MBM
4284	Std. Item	Timber and Lumber - Slats Treated	_____	MBM
4300	Std. Item	Superstructure (for Concrete Bridges) Bridge Plan Area _____ SF	_____	L.S.
4311	Std. Item	Bridge Deck (for Steel Bridges) Bridge Plan Area _____ SF	_____	L.S.
6945	Std. Item	Conduit Pipe 2" Diam.	_____	LF
4410	Std. Item	Bridge Railing Type _____	_____	LF
4420	GSP Item	Bridge Grate Inlet	_____	Each
	GSP Item	Pigmented Sealer	_____	SY
7169	Std. Item	Structural Earth Wall	_____	SF
--	Sp. Prov.	_____	_____	_____
--	Sp. Prov.	_____	_____	_____
5656	Std. Item	Bridge Approach Slab	_____	SY

DOT Form 230-031
Revised 05/2017

Page 3 of 5

Breakdown of Items for Superstructure or Bridge Deck

St. Item No.	Item Use	Item Description	Quantity	Unit of Measure
--	Std. Item	Epoxy-Coated Steel Reinforcing Bar		LB
--	Std. Item	Epoxy-Coated Steel Reinforcing Bar (Traffic Barrier)		LB
--	Std. Item	Steel Reinforcing Bar		LB
--	Std. Item	Steel Reinforcing Bar (Traffic Barrier)		LB
--		Conc. Class _____		CY
--	Std. Item	Conc. Class 4000D		CY
--	Std. Item	Conc. Class 4000		CY
--	Std. Item	Conc. Class 4000 (Traffic Barrier)		CY
--	Std. Item	Conc. Class 5000		CY
--	Std. Item	Conc. Class _____ LS		CY
--	GSP Item	Fractured Fin Finish		SY
--	Std. Item	Structural Carbon Steel		LB
--	Std. Item	Structural Low Alloy Steel		LB
--	Std. Item	Structural High Strength Steel		LB
--	Std. Item	Cast Steel		LB
--	Std. Item	Cast Iron		LB
--	Std. Item	Malleable Iron		LB
--	Std. Item	Ductile Iron		LB
--	Std. Item	Cast Bronze		LB
--	Std. Item	Timber and Lumber - Untreated		MBM
--	Std. Item	Timber and Lumber - Creosote Treated		MBM
--	Std. Item	Timber and Lumber - Salts Treated		MBM
--	Sp. Prov.	Glulam Deck Panels		MBM
6945	Std. Item	Conduit Pipe 2" Diameter		LF
--	Std. Item	Bridge Railing Type _____		LF
--	Std. Item	Traffic Barrier		LF
4433	GSP. Item.	Modify Bridge Drain		Each
4434	GSP Item	Plugging Existing Bridge Drain		Each
4420	GSP Item	Bridge Grate Inlet		Each
Varies	GSP Item	Expansion Joint System		LF
		Type _____ Length _____ LF		
		Type _____ Length _____ LF		
		Type _____ Length _____ LF		
4444	BSP Item	Expansion Joint Modification		LF
		Type _____ Length _____ LF		
4232	Std. Item	Modified Concrete Overlay		CF
4233	Std. Item	Finishing and Curing Modified Concrete Overlay		SY
4456	Std. Item	Scarifying Concrete Surface		SY
	BSP Item	Polymer Concrete Overlay		SY
4465	Std. Item	Further Deck Preparation (for Type 1 Deck Repair)		SF
4467	Std. Item	Further Deck Preparation for Type 2 Deck Repair		SF
4451	Std. Item	Bridge Deck Repair Br No _____		SF
4455	Std. Item	Waterproof Membrame Br No _____		SY

DOT Form 230-031
Revised 05/2017

Page 4 of 5

5708	Std. Item	Removing Existing Overlay from Bridge Deck _____	_____	SY
--	Std Item	Pigment Sealer	_____	SY
--	Sp. Prov.	Pot Bearing	_____	Each
--	BSP Item	Disc Bearing	_____	Each
--	BSP Item	Spherical Bearing	_____	Each
--	BSP Item	Cylindrical Bearing	_____	Each
--	Std. Item	Elastomeric Bering Pad (for pads only)	_____	Each
--	Sp., Prov.	Elastomeric Bearing Pad Assembly (for a fabricated assembly)	_____	Each
--	GSP Item	Fabric Pad Bearing	_____	Each
4269	Std. Item	Prestressed Conc. Girder _____	_____	LF
--	Std. Item	Prestressing	_____	LB
--	Sp. Prov.	Precast Segment	_____	LF
		Volume _____ CY/CM		
--	Sp. Prov.	_____	_____	_____
--	Sp. Prov.	_____	_____	_____

DOT Form 230-031
Revised 05/2017

Page 5 of 5

UNIT COSTS

Before using these structure unit costs for any official WSDOT project cost estimate, contact the Bridge and Structures Office at 360-705-7201 to discuss the specific project criteria and constructability related risks, so an appropriate structures construction cost can be provided.

	UNIT	LOW	MEDIAN	HIGH ΔΔ
Prestressed Concrete Girders				
— Span 50 - 175 FT.				
Water Crossing w/piling	SF	$250.00	$300.00	$350.00
Water Crossing w/spread footings	SF	$200.00	$240.00	$270.00
Dry Crossing w/piling	SF	$230.00	$270.00	$320.00
Dry Crossing w/spread footings	SF	$180.00	$220.00	$250.00
Reinforced Concrete And Post-Tensioned				
Concrete Box Girder — Span 50 - 200 FT.				
Water Crossing w/piling	SF	$280.00	$320.00	$350.00
Water Crossing w/spread footings	SF	$230.00	$270.00	$300.00
Dry Crossing w/piling	SF	$260.00	$300.00	$330.00
Dry Crossing w/spread footings	SF	$210.00	$250.00	$280.00
Reinforced Concrete Flat Slab	SF	$230.00	$280.00	$330.00
— Span 20 - 60 FT.				
Prestressed Concrete Slabs	SF	$200.00	$250.00	$300.00
— Span 13 - 69 FT.				
Prestressed Concrete Decked Bulb -Tee Girder	SF	$220.00	$270.00	$320.00
— Span 40 - 115 FT.				
Steel Girder — Span 60 - 400 FT.	SF	$230.00	$270.00	$330.00
Steel Box Girder — Span 300 - 700 FT.	SF		$350.00	
Steel Truss — Span 300 - 700 FT.	SF		$380.00	
Steel Arch — Span 30 - 400 FT.	SF		$450.00	
Bridge Approach Slab	SY		$250.00	
Concrete Bridge Removal	SF	$20.00	$35.00	$50.00
Widening Existing Concrete Bridges (Including Removal)	SF	$175.00	$200.00	$300.00
Railroad Undercrossing — Single Track	LF	* $9,000.00 (Steel Underdeck Girder)		
		* $11,000.00 (Steel Thru-Girder)		
Railroad Undercrossing — Double Track	LF	* $14,000.00		
Pedestrian Bridge — Reinforced Concrete	SF	$400.00	$550.00	$700.00
Reinforced Concrete Rigid Frame (Tunnel)	SF		* $100.00	
Replace Existing Curbs & Barrier With	LF	$220.00	$280.00	$350.00
Safety Shape Traffic Barrier (Including Removal)				
Reinforced Concrete Retaining Wall (Exposed Area)	SF	$55.00	$75.00	$90.00

UNIT COSTS

Before using these structure unit costs for any official WSDOT project cost estimate, contact the Bridge and Structures Office at 360-705-7201 to discuss the specific project criteria and constructability related risks, so an appropriate structures construction cost can be provided.

	UNIT	LOW	MEDIAN	HIGH ΔΔ
Permanent Geosynthic Wall w/ Shotcrete Facing	SF	$20.00	$35.00	$50.00
Permanent Geosynthic Wall w/ Concrete Fascia Panel	SF	$30.00	$45.00	$60.00
Soil Nail Wall	SF	$80.00	$100.00	$130.00
Shotcrete Facing	SF	$20.00	$30.00	$40.00
Concrete Fascia Panel	SF	$30.00	$40.00	$50.00
Soldier Pile Wall (Exposed Area)	SF	$100.00	$120.00	$130.00
Soldier Pile Tieback Wall (Exposed Area)	SF	$140.00	$160.00	$200.00
Concrete Crib Wall Concrete Headers	SF	$40.00	$50.00	$60.00

*Based on limited cost data. Check with the Bridge Project Support Engineer.

Bridge areas are computed as follows:
Typical Bridges: Width x Length

Width: Total width of Deck, including portion under the barrier.
Length: Distance between back of pavement seats, or for a Bridge having Wingwalls, 3'-0" behind the top of the embankment slope; typically end of Wingwalls to end of Wingwalls, reference Standard Plans H9.

Special Cases:

Widenings - Actual area of new construction.

Tunnel - Outside dimension from top of footing to top of footing over the tunnel roof, i.e., including walls and top width.

ΔΔ For small jobs (less than $100,000), use the high end of the cost range as a starting point.

(Note: Unit structure costs include mobilization but do not include **sales tax, engineering, or contingency)**

SUBSTRUCTURE

BID ITEMS	UNIT	UNIT COST LOW		HIGH ΔΔ
Structure Excavation Class A Incl. Haul				
Earth	CY	$12.00	—	$30.00
Rock	CY	$100.00	—	$220.00
Inside Cofferdam — Earth	CY	$22.00	—	$33.00
— Rock	CY	$110.00	—	$190.00
Shoring Extra Excavation Class A				
Dry — Depth under 6′	SF	$3.00	—	$8.00
Dry — 6′ - 10′	SF	$7.00	—	$11.00
Dry — 10′ - 20′	SF	$11.00	—	$22.00
Cofferdam	SF	$30.00	—	$40.00
Preboring For Standard Piles	LF	$35.00	—	$60.00
Furnishing & Driving Test Piles				
Concrete	EACH	$5,000.00	—	$10,000.00
Steel	EACH	$4,000.00	—	$8,000.00
Timber	EACH	$2,000.00	—	$3,000.00
Furnishing Piling				
Conc. _____ Dia.	LF	$35.00	—	$45.00
Steel — TYP HP 12x53	LF	$30.00	—	$35.00
Timber — Creosote Treated	LF	$10.00	—	$12.00
Timber — Untreated	LF	$8.00	—	$10.00
** Pile Tip				
CIP Concrete (Steel Casing — Short Tip)	EACH	$200.00	—	$250.00
CIP Concrete (Steel Casing — 10 Stinger)	EACH	$4,500.00	—	$5,500.00
Steel (H-Pile)	EACH	$120.00	—	$220.00
Timber (Arrow Tip)	EACH	$25.00	—	$45.00
Driving Piles (40′ - 70′ Lengths)				
Concrete _____ Dia.	EACH	$500.00	—	$1,000.00
Steel	EACH	$350.00	—	$800.00
Timber	EACH	$225.00	—	$450.00

SUBSTRUCTURE

BID ITEMS	UNIT	UNIT COST LOW		HIGH ΔΔ
Shafts				
Constructing — Ft. Diam Shaft (4' to 6' Dia.)	LF	$250.00	—	$350.00
Constructing — Ft. Diam Shaft (8' to 12' Dia.)	LF	$300.00	—	$370.00
Soil Excavation For Shaft Including Haul	CY	$300.00	—	$600.00
Rock Excavation For Shaft Including Haul	CY	$600.00	—	$800.00
Furnishing & Placing Temp. Casing For Shaft	LF	$125.00	—	$350.00
Furnishing Permanent Casing For Shaft	LF	$150.00	—	$600.00
Placing Permanent Casing For Shaft	EACH	$2,000.00	—	$3,000.00
Casing Shoring	LF	$150.00	—	$350.00
Shoring or Extra Excavation CL.A — Shaft	EST	$10,000.00	—	$25,000.00
Conc. Class 4000P For Shaft	CY	$250.00	—	$350.00
St. Reinf. Bar For Shaft	LBS	$1.00	—	$1.50
QA Shaft Test	EACH	$1,000.00	—	$3,000.00
Removing Shaft Obstructions	EST	5% of all of above shaft ____		
St. Reinf. Bar For Bridge	LBS	$1.00	—	$1.30
Epoxy-Coated St. Reinf. Bar For Bridge	LBS	$1.20	—	$1.70
Conc. Class 4000W	CY	$250.00	—	$400.00
Conc. Class 4000P	CY	$250.00	—	$400.00
Conc. Class 4000 (Footings)	CY	$400.00	—	$600.00
Conc. Class 4000 (Abut. & Ret. Walls)	CY	$450.00	—	$650.00
Conc. Class 5000	CY	$550.00	—	$750.00
Lean Concrete	CY	$200.00	—	$250.00
Conc. Class 4000P (CIP Piling)	CY	$200.00	—	$250.00

ΔΔ For small jobs (less than $100,000), use the high end of the cost range as a starting point.
** Pile ultimate capacity will affect these prices. Confirm with Bridge Project Support Engineer.

SUPERSTRUCTURE

BID ITEMS	UNIT	UNIT COST LOW	HIGH ΔΔ
Elastomeric Bearing Pads			
Girder Seat	EACH	$150.00	$200.00
Girder Stop	EACH	$100.00	$150.00
Bearings - Spherical and Disc (In place with plates)	KIP	$15.00	$18.00
Fabric Pad Bearing (In place, including all plates, TFE, etc.)	EACH	$2,000.00	$3,000.00
Prestressed Concrete I Girder			
W42G (Series 6)	LF	$200.00	
W50G (Series 8)	LF	$225.00	
W58G (Series 10)	LF	$245.00	
W74G (Series 14)	LF	$265.00	
Wide Flange Prestressed Concrete Girder			
WF42G	LF	$250.00	
WF50G	LF	$275.00	
WF58G	LF	$300.00	
WF74G	LF	$325.00	
W83G	LF	$350.00	
W95G	LF	$400.00	
Spliced Prestressed Concrete I Girder			
WF74PTG	LF	$250.00	
W83PTG	LF	$275.00	
W95PTG	LF	$300.00	
Bulb Tee Girder			
WBT32G	LF	$250.00	
WBT38G	LF	$275.00	
WBT62G	LF	$300.00	
Trapezodial Tub Girder			
U54G4	LF	$500.00	
U54G5	LF	$510.00	
U54G6	LF	$520.00	
U66G4	LF	$530.00	
U66G5	LF	$540.00	
U66G6	LF	$560.00	
U78G4	LF	$570.00	
U78G5	LF	$580.00	
U78G6	LF	$600.00	
Wide Flange Trapezodial Tub Girder			
UF60G4	LF	$520.00	
UF60G5	LF	$530.00	
UF60G6	LF	$540.00	
UF72G4	LF	$550.00	
UF72G5	LF	$560.00	
UF72G6	LF	$570.00	
UF84G4	LF	$580.00	
UF84G5	LF	$590.00	
UF84G6	LF	$600.00	

SUPERSTRUCTURE

BID ITEMS	UNIT	UNIT COST LOW	UNIT COST HIGH ΔΔ
Structural Carbon Steel (Steel girder, when large amount of steel is involved)	LBS	$1.80	$2.80
Structural Low Alloy Steel (Steel girder, when large amount of steel is involved)	LBS	$2.00	$3.00
Structural Steel (Sign supports, when small amounts of steel is involved)	LBS	$6.00	$8.00
Timber & Lumber	MBM	$2,000.00	$2,800.00
Creosote Treated	MBM	$2,250.00	$3,000.00
Salts Treated	MBM	$1,500.00	$2,000.00
Untreated	MBM	$1,750.00	$2,250.00
Lagging (in place) Treated	SF	$15.00	$30.00
Expansion Joint Modification (Remove and Replace Headers Only - Add Exp. Jt. System Costs below)	LF	$400.00	$600.00
Expansion Joint System			
Compression Seal	LF	$100.00	$150.00
Modular (Approx. $100 per inch of movement)	LF	$1,500.00	$3,500.00
Strip Seal	LF	$300.00	$600.00
Rapid Cure Silicone	LF	$50.00	$80.00
Bridge Drains	EACH	$400.00	$600.00
Bridge Grate Inlets	EACH	$1,500.00	$2,000.00
Conc. Class 5000	CY	$900.00	$1,200.00
Conc. Class 5000 (Segmental Constr.)	CY	$1,000.00	$1,500.00
Conc. Class 4000D (Deck Only)	CY	$1,000.00	$1,800.00
Conc. Class 4000	CY	$800.00	$1,500.00
Conc. Class EA (Exposed Aggregate)	CY	$500.00	$600.00
St. Reinf. Bar	LBS	$1.00	$1.50
Epoxy-Coated St. Reinf. Bar	LBS	$1.25	$1.75
Post-tensioning Prestressing Steel (Includes Anchorages)	LBS	$6.00	$8.00
Traffic Barrier	LF	$120.00	$160.00
Bridge Railing Type BP & BP-S	LF	$60.00	$100.00
Bridge Railing Type Thrie Beam	LF	$60.00	$85.00
Modified Conc. Overlay	CF	$20.00	$60.00
Furnishing and Curing Modified Conc. Overlay	SY	$40.00	$80.00
Scarifying Conc. Overlay (½-inch)	SY	$70.00	$90.00
Polymer Concrete	SY	$90.00	$150.00
Polyester Concrete	CF	$140.00	$250.00
Scarifying Concrete Overlay (2-inch or more)	SY	$120.00	$200.00

ΔΔ For small jobs (less than $100,000), use the high end of the cost range as a starting point.

MISCELLANEOUS

BID ITEMS	UNIT	UNIT COST LOW	UNIT COST HIGH ΔΔ
Conduit Pipe 2" Diameter	LF	$10.00	$15.00
Sign Support (Brackets, Mono, or Truss Sign Bridges)	LBS	$5.00	$7.00
Concrete Surface Finishes			
Fractured Fin Finish	SY	$20.00	$30.00
Exposed Aggregate Finish (Requires the use of concrete Class EA)	SY	$20.00	$25.00
Pigmented Sealer	SY	$7.00	$10.00
Painting Existing Steel Bridges (Lead Base)	TON (Steel)	$650.00	$900.00
Painting New Steel Bridges	LBS (Steel)	$0.12	$0.15
Mobilization	Sum of Items	10%	
Masonry Drilling Δ			
Holes up to 1'-0" in depth			
1" Diameter	EACH	$30.00	
1 ½" Diameter	EACH	$35.00	
2" Diameter	EACH	$40.00	
2 ½" Diameter	EACH	$42.00	
3" Diameter	EACH	$44.00	
3 ½" Diameter	EACH	$46.00	
4" Diameter	EACH	$52.00	
5" Diameter	EACH	$54.00	
6" Diameter	EACH	$70.00	
7" Diameter	EACH	$90.00	
Δ For holes greater than 1'-0" in depth and up to 20'-0" in depth, use 1.5 x above prices. If drilling through steel reinforcing, add $16.00 per lineal inch of steel drilled.			
Removal of Rails and Curbs	LF	$90.00	$140.00
Removal of Rails, Curbs, and Slab	SF	$30.00	$60.00
Further Deck Preparation	CF	$120.00	$175.00
Bridge Deck Repair	CF	$120.00	$180.00
Removing HMA from bridge deck	SY	$8.50	$13.50
Plugging Existing Bridge Drain	EACH	$350.00	

ΔΔ For small jobs (less than $100,000), use the high end of the cost range as a starting point.

SR 162 7002 Carbon
River Bridge 162/14

Date of Transmittal	Estimate of Cost	Assume Accuracy %	Estimate Made By	Available Data							Copies Sent To			Remarks
				Field Data (Dated)	Date Layout Made	Foundation Date Rec.	Preliminary Quantities	Final Quantities	Estimate By Sq. Ft. Area	District	Design Branch	Program Development	
10-2-91	$517,000.00	±15%	DMJ	8-91			—		✓	3	✓	✓	Please See Cover Transmittal
1-9-92	$692,000.00	±10%	LHT					✓		✓	✓	✓	

Washington State Department of Transportation

Special Provisions Checklist

SR	Job No.	Project Title		
Design By		Check By	Date	Supervisor
Type of Structure				

Instructions:
- [X] Check items pertaining to this structure
- [X] _____ Note other items with "X" in box and fill in blank line
- [ ] Leave blank if it **DOES NOT** pertain to this structure

A. Permits and Regulations
- [ ] Coast Guard
- [ ] _____

B. Railroads
- [ ] Railroad Bridge
- [ ] Railroad in Vicinity
- [ ] _____

C. Order of Work
- [ ] Approach embankment settlement period
- [ ] Stage construction sequence
- [ ] _____

D. Traffic Control
- [ ] Reduction in traffic lanes
- [ ] Traffic within _____ feet of new construction
- [ ] Traffic detoured, no traffic on bridge
- [ ] One way traffic on bridge
- [ ] _____

E. Utilities and Existing Pavement
- [ ] Utilities on Bridge, type _____
- [ ] Existing utilities in vicinity of construction
- [ ] Existing pavement in vicinity of construction
- [ ] _____

F. Falsework
- [ ] Falsework opening over existing roadway
- [ ] Falsework opening over railroad
- [ ] Falsework opening over water
- [ ] Protection of falsework
- [ ] Supported from existing structure
- [ ] Not supported from existing structure
- [ ] Special falsework release sequence required
- [ ] _____

DOT Form 230-037 EF
Revised 07/2011

G. Foundation

- ☐ Excavation near existing pavement
- ☐ Excavation near railroad track or facilities
- ☐ Concrete Seals
- ☐ Seal construction using a berm
- ☐ Cofferdams
- ☐ Pumping water from foundation excavation required
- ☐ Riprap at piers
- ☐ Removal of unsuitable material
- ☐ Rock excavation requiring threshold limit value
- ☐ Special Excavation
- ☐ _____

H. Forms

- ☐ Special forms for architectural treatment
- ☐ Fractured Fin Finish
- ☐ Variable depth random board finish
- ☐ 3/4 inch random board finish
- ☐ Remove forms from cells which have access (Box grider)
- ☐ _____

I. Piles

- ☐ Concrete test pile
- ☐ Concrete piling ____ inch diameter
- ☐ Steel test pile
- ☐ Steel piling _____
- ☐ Timber Test Pile
- ☐ Timber piling
- ☐ Pile loading test
- ☐ Pile minimum tip elevations
- ☐ Pile splice
- ☐ Pile tip
- ☐ Preboring for pile
- ☐ Driving piles in highly developed business or residential areas
- ☐ Excavation for pile
- ☐ Driving from existing structure
- ☐ No driving from existing structure
- ☐ Overdriving of piles
- ☐ _____

J. Shafts

- ☐ Required permanent casing
- ☐ Required temporary casing
- ☐ Casing shoring
- ☐ Shaft Seal
- ☐ CSL access tubes
- ☐ _____

DOT Form 230-037 EF
Revised 07/2011

K. Prestressed Concrete Griders

- ☐ Epoxy - coated prestressing steel
- ☐ Temporary strands
- ☐ f'c 28 days > 8,500 psi
- ☐ Precast prestressed member
- ☐ Spliced prestressed concrete girder
- ☐ Prestressed concrete tub girder
- ☐ _____

L. Superstructure

- ☐ Concrete class
- ☐ Post - tensioning tendons
- ☐ Elastomeric bearing pads (pad only)
- ☐ Elastomeric bearing pad assembly (fabricated assembly)
- ☐ Fabric pad bearing
- ☐ Disc bearing
- ☐ Spherical bearing
- ☐ Cylindrical bearing
- ☐ Electrical Conduit
- ☐ Expansion joint
- ☐ _____

M. Steel Structure

- ☐ Structural Carbon Steel
- ☐ Structural Low Alloy Steel
- ☐ Structural H.S. Steel
- ☐ Steel Casting
- ☐ A - 307 Fasteners
- ☐ M - 164 Fasteners
- ☐ F-1554 Fasteners
- ☐ Shop Assembling
- ☐ Notch Toughness Requirements
- ☐ Application of Paint - Color No. _____
- ☐ Steel Erection
- ☐ _____

N. Timber Structures

- ☐ Untreated
- ☐ Creosote treated
- ☐ Salt treated
- ☐ Glulam deck panels
- ☐ Type and grade of timber
- ☐ Fire prevention requirement needed
- ☐ _____

DOT Form 230-037 EF
Revised 07/2011

O. Signing and Lighting

- ☐ Navigation lighting system
- ☐ Temporary navigation light
- ☐ Sign bridge on structure
- ☐ Cantilever sign structure on bridge
- ☐ Bridge mounted sign brackets
- ☐ _____

P. Drainage System

- ☐ Special bridge drains
- ☐ Bridge grate inlets
- ☐ Downspout
- ☐ _____

Q. Surface Finish

- ☐ Fractured fin finish
- ☐ Sandblast finish
- ☐ Variable depth random board finish
- ☐ 3/4 inch random board finish
- ☐ Pigmented sealer
- ☐ _____

R. Special Classes of Concrete

- ☐ Concrete Class EA
- ☐ Concrete Class HE
- ☐ _____

S. Bridge Widening or Replacement

- ☐ Complete removal of existing structure
- ☐ Removing portions of existing structure
- ☐ Salvage Materials, storage site _____ , salvage item _____
- ☐ Coating contrete surface with epoxy resin
- ☐ Drilling holes
- ☐ Core drilled holes
- ☐ Set rebar with epoxy
- ☐ Use of rockbolts or rock anchors
- ☐ Grout, comp. strength _____ psi at ____ day, location _____
- ☐ As built Plans of existing structure available for bidder's inspection
- ☐ HMA overlay
- ☐ LMC overlay
- ☐ Polyester concrete overlay
- ☐ Bridge deck repair
- ☐ Further deck preparation
- ☐ Explosive prohibited
- ☐ Explosives allowed
- ☐ _____

DOT Form 230-037 EF
Revised 07/2011

T. Waterproofing

- ☐ Membrane waterproofing (Deck Seal)
- ☐ _____

U. Miscellaneous Items

- ☐ Temporary oak blocks
- ☐ Poured rubber
- ☐ Expaned polstyrene
- ☐ Plastic waterstops
- ☐ Expanded rubber
- ☐ Butyl rubber sheeting
- ☐ Grout, comp. strength ___ psi at _____ day, location _____
- ☐ Electrical conduit
- ☐ _____

V. Metal Bridge Railing

- ☐ Bridge Railing Type BP
- ☐ Bridge Railing Type _____
- ☐ _____

W. Repair Work

- ☐ Epoxy Crack Sealing
- ☐ Timber Redecking
- ☐ Concrete Deck Repair
- ☐ _____

X. Other Items

- ☐ Ceramic Tiles
- ☐ Sturctural Earth Wall
- ☐ Tieback Wall
- ☐ Noise Barrier Wall
- ☐ Winter Conditions
- ☐ Work Access
- ☐ Work hours or seasonal restrition
- ☐ Work Bridge
- ☐ Detour Bridge
- ☐ _____

DOT Form 230-037 EF
Revised 07/2011

Operation	Units**	Min. Output	Ave. Output	Max. Output
Substructure				
Structure Exc. & Shoring	CY/DAY	20	80	150
*Seals	CY/DAY	10	15	20
*Footings	CY/DAY	6	10	14
*Abutment Walls	CY/DAY	4	7	19
*Wingwalls	CY/DAY	1	1.5	2
*Retaining Walls with Footings	CY/DAY	4	11	17
*Columns	CY/DAY	3	4	8
Falsework for X-beams	CY/DAY	4	10	13
*X-beams	CY/DAY	16	18	20
Furnishing Piles				
Precast Concrete	DAYS	40	30	20
Cast-in-Place Concrete	DAYS	15	5	2
Steel	DAYS	30	10	2
Timber	DAYS	20	5	2
Driving Piles				
Driving Test Piles	EACH/DAY	1	1	2
Concrete	LF/DAY	100	150	200
Steel	LF/DAY	100	150	200
Timber	LF/DAY	100	150	200
Shafts	DAYS	2	3	4
Soldier Pile Walls				
Driving Soldier Pile	DAYS	2	3	4
Permanent Ground Anchor	EACH	1	4	10
Timber Lagging	MBM/DAY	1	2	4
Concrete Fascia Panel	SF/DAY	100	800	1500
Soil Nail Walls				
Soil Nail	EACH	1	4	10
Shotcrete Facing	SF/DAY	1200	3000	6000
Superstructure				
Prestressed Girders				
Girder Fabrication	DAYS	70	45	35
Set Girders	LF/DAY	200	550	1,450
*Slab & Diaphragms	CY/DAY	6	11	18

*Concrete

**All times are based on a single crew with 8-hour work DAYS

Operation	Units**	Min. Output	Ave. Output	Max. Output
Box Girders				
Span Falsework	SF/DAY	150	700	900
*Bottom Slab	CY/DAY	3	8	11
*Webs, Diaphragms, and X-beams	CY/DAY	5	18	25
*Top Slab	CY/DAY	7	9	12
Stress and Grout Strands	LBS/DAY	4,500	6,000	8,000
Strip Falsework	SF/DAY	1,500	2,200	3,000
T-Beam				
Span Falsework	SF/DAY	500	700	1,000
*Girders, Diaphragms, and Slab	CY/DAY	6	10	15
Strip Falsework	SF/DAY	1,000	1,500	2,000
Flat Slab				
Span Falsework	SF/DAY	100	250	600
*Slab and X-beams	CY/DAY	6	10	15
Strip Falsework	SF/DAY	300	500	1,000
Steel Girder				
Girder Fabrication	DAYS	200	150	110
Girder Erection	LF/DAY	50	100	200
*Slab	CY/DAY	6	10	15
Painting	SF/DAY	1,000	2,000	3,000
Miscellaneous				
*Traffic Barrier	LF/DAY	20	40	80
*Traffic Railing & Sidewalk	LF/DAY	15	35	60
*SEW Traffic Barrier	LF/DAY	15	35	60
*Concrete Deck Overlay	SY/DAY	200	250	300
Expansion Joint Replacement	DAYS/LANE CLOSURE	8	6	4
Bridge Rail Retrofit	LF/DAY	50	100	200

* Concrete

** All times are based on a single crew with 8-hour work DAYS

HIGHWAY DIVISION
BRIDGE AND STRUCTURES BRANCH

CONSTRUCTION WORKING DAY SCHEDULE

SR	JOB NO	PROJECT TITLE
162	L0914	Carbon River Br. No. 162/14
DESIGN BY	CHECKED BY	DATE	SUPV
LHT		1/10/92	KNK
TYPE OF STRUCTURE			
Prestressed Concrete			

DESCRIPTION OF WORK	WORKING DAYS 20 40 60 80 100 120 140 160 180 200 220
Mobilization	
Shop Plan Submittal	
Girder Fabrication	
Pier 1 and 4 Shoring	
Pier 1 and 4 Construction	
Pier 2 and 3 Shoring	
Pier 2 and 3 Construction	
X-Beam Construction	
Setting the Girders	
Slab Construction	
Traffic Barrier Construction	
Misc. and Demobilization	

Chapter 13 Bridge Load Rating Contents

13.1 General 13-1
13.1.1 LRFR Method per the MBE 13-2
13.1.2 Load Factor Method (LFR) 13-5
13.1.3 Allowable Stress Method (ASD) 13-7
13.1.4 Live Loads 13-7
13.1.5 Rating Trucks 13-8

13.2 Special Rating Criteria 13-11
13.2.1 Dead Loads 13-11
13.2.2 Live Load Distribution Factors 13-11
13.2.3 Reinforced Concrete Structures 13-11
13.2.4 Prestressed Concrete Structures 13-11
13.2.5 Concrete Decks 13-12
13.2.6 Concrete Crossbeams 13-12
13.2.7 In-Span Hinges 13-12
13.2.8 Girder Structures 13-12
13.2.9 Box Girder Structures 13-12
13.2.10 Segmental Concrete Bridges 13-12
13.2.11 Concrete Slab Structures 13-12
13.2.12 Steel Structures 13-12
13.2.13 Steel Floor Systems 13-13
13.2.14 Steel Truss Structures 13-13
13.2.15 Timber Structures 13-13
13.2.16 Widened or Rehabilitated Structures 13-13
13.2.17 Culverts 13-14
13.2.18 Overloads 13-14

13.3 Load Rating Software 13-15

13.4 Load Rating Reports 13-16

13.5 Appendices 13-17
Appendix 13.4-A1 LFR Bridge Rating Summary 13-18
Appendix 13.4-A2 LRFR Bridge Rating Summary 13-19

13.99 References 13-20

Chapter 13 Bridge Load Rating

13.1 General

Bridge load rating is a procedure to evaluate the adequacy of various structural components to carry predetermined live loads. The Bridge Load Rating Engineer in the WSDOT Bridge Preservation Office is responsible for the bridge inventory and load rating of existing and new bridges in accordance with the National Bridge Inspection standards (NBIS) and the AASHTO *Manual for Bridge Evaluation* (MBE), latest edition. Currently, only elements of the superstructure will be rated, however, if conditions warrant, substructure elements may need to be rated. The superstructure shall be defined as all structural elements above the column tops including drop crossbeams.

Load ratings are required for all new, widened, or rehabilitated bridges where the rehabilitation alters the load carrying capacity of the structure. Load ratings shall be done immediately after the design is completed and rating calculations shall be filed separately per Section 13.4 and files shall be forwarded to WSDOT's Load Rating Engineer.

The Bridge Preservation Office is responsible for maintaining an updated bridge load rating throughout the life of the bridge based on the current condition of the bridge. Conditions of existing bridges change over time, resulting in the need for reevaluation of the load rating. Such changes may be caused by damage to structural elements, extensive maintenance or rehabilitative work, or any other deterioration identified by the Bridge Preservation Office through their regular inspection program.

New bridges that have designs completed after October 1, 2010 shall be rated based on the Load and Resistance Factor Rating (LRFR) method per the MBE and this chapter. NBI ratings shall be based on the HL-93 truck and shall be reported as a rating factor. For bridges designed prior to October 1, 2010, partially reconstructed or rehabilitated bridges where part of the existing structure is designed by the Allowable Stress Method (ASR) or by the Load Factor Method (LFR), and other existing structures, NBI ratings can be based on either the LFR or Load Resistance Factor Rating (LRFR) methods. The rating factors shall be based on HS loading and reported in tons when using the LFR method. For State owned structures, verify with WSDOT's Load Rating Engineer regarding which load rating method to use for bridges designed prior to October 1, 2010. By definition, the adequacy or inadequacy of a structural element to carry a specified truck load will be indicated by the value of its rating factor (RF); that is, whether it is greater or smaller than 1.0.

13.1.1 LRFR Method per the MBE

Rating Equation

$$RF = \frac{(C - \gamma_{DC}\, DC - \gamma_{DW}\, DW \pm \gamma_p\, P)}{\gamma_{LL}\, LL\, (1+IM)} \qquad \text{(13.1.1A-1)}$$

Where:

RF = Rating factor
C = $\phi c\ \phi s\ \phi n\ R_n$, where $\phi c\ \phi s \geq 0.85$ for strength limit state
C = f_R for service limit state
R_n = Nominal Capacity of member
f_R = Allowable Stress per LRFD
DC = Dead load due to structural components and attachments
DW = Dead load due to wearing surface and utilities
P = Permanent loads other than dead loads
LL = Live load effect
IM = Dynamic load allowance (Impact)
γ_{DC} = Dead load factor for structural components and attachments
γ_{DW} = Dead load factor for wearing surface and utilities
γ_P = Load factor for permanent load
γ_{LL} = Live load factor
ϕ_c = Condition factor
ϕ_s = System factor
ϕ_n = Resistance factor based on construction material

When rating the full section of a bridge, like a box girder or 3D truss, or crossbeams, with two or more lanes, the following formula applies when rating emergency vehicles and overload trucks.

$$RF = \frac{C - \gamma_{DC}\, DC - \gamma_{DW}\, DW \pm \gamma_p\, P - \gamma_{LL}\, LL_{lgl}(1+IM)}{\gamma_{LL}\, LL\, (1+IM)} \qquad \text{(13.1.1A-2)}$$

The formula above assumes that there is one overload truck occupying one lane, and one of the legal trucks occupying each of the remaining lanes. Trucks shall be placed in the lanes in a manner that produces the maximum forces. The live load factor for both of the legal truck and permit truck shall be equal and are dependent on the permit truck. The LL_{lgl} shown in the equation above corresponds to the maximum effect of the legal truck(s).

Condition Factor (ϕc_c)

Condition factor is based on the Bridge Management System (BMS) condition state of the element per the most recent inspection report. The engineer should consider the quantity of each element in a fair or poor condition state and the notes describing the condition of an element when determining the appropriate condition factor.

Structural Condition of Member	ϕ_c
Good or Satisfactory, BMS Condition 1 or 2	1.00
Fair, BMS Condition 3	0.90
Poor, BMS Condition 4	0.85

System Factor (ϕ_s)

The system factor shown in the table below applies to flexure and all axial forces; use a system factor of 1.00 when rating shear.

Super Structure Type	ϕ_s
Welded Members in Two Girder/Truss/Arch Bridges	0.85
Riveted Members in Two Girder/Truss/Arch Bridges	0.90
Multiple Eyebar Members in Truss Bridges	0.90
Three-Girder Bridges with Girder Spacing 6′	0.85
Four Girder Bridges with Girder Spacing ≤ 4′	0.95
All Other Girder and Slab Bridges	1.00
Floorbeams with Spacing >12′ and Noncontinuous Stringers	0.85
Redundant Stringer Subsystems Between Floorbeams	1.00

Dead and Live Load Factors

					Inventory HL-93	Operating HL-93	Legal & NRL Loads	Permit & EV*
Bridge Type	**Limit State**	γ_{DC}	γ_{DW}	γ_p				
Reinforced Concrete	Strength I	1.25	1.50	--	1.75	1.35	Table 13.1-1	--
	Strength II	1.25	1.50	1.0	--	--	--	Table 13.1-1
Prestressed Concrete	Strength I	1.25	1.50	1.0	1.75	1.35	Table 13.1-1	--
	Strength II	1.25	1.50	1.0	--	--	--	Table 13.1-1
	Service III	1.00	1.00	1.0	1.00	--	1.0	1.0
	Service I	1.00	1.00	1.0	--	--	--	1.0
Steel	Strength I	1.25	1.50	1.0	1.75	1.35	Table 13.1-1	--
	Strength II	1.25	1.50	1.0	--	--	--	Table 13.1-1
	Service II	1.00	1.00	1.0	1.3	1.0	1.30	1.0

Live Load Factors for Legal and Permit Loads

Truck	Live load Factor	ADTT ≤ 1000	ADTT > 1000	ADTT Unknown
Legal & NRL	γ_{LL}	1.30	1.45	1.45
Permit	γ_{LL}	1.20	1.20	1.20
EV*	γ_{LL}	1.30	1.30	1.30

*Emergency Vehicle

Table 13.1-1

In cases where RF for legal loads is less than 1, which would require the bridge to be posted, live load factors may be reduced (interpolated based on ADTT), per Section 6A.4.4.2.3 of the MBE.

Number of Lanes	Multiple Presence Factor
1 Lane	= 1.2
2 Lanes	= 1.0
3 Lanes	= 0.85
> 3 Lanes	= 0.65

The table above shows the Multiple Presence Factors based on the number of loaded lanes. For cases where a permit truck or an emergency vehicle is combined with a legal truck, the multiple presence factor for the total number of loaded lanes in each case shall be applied to all loads. For cases where a permit truck is loaded in a single lane with no other trucks present, the multiple presence factor for 1 lane does not apply.

Dynamic Load Allowance (Impact)

Dynamic load allowance is dependent on the approach onto the bridge and condition of the deck and joints based on the latest inspection report.

Truck	IM	NBI Element 1681	BMS Flag 322
HL 93 (All Span Lengths):			
Inventory	33%	N/A	N/A
Operating	33%	N/A	N/A
Legal, Permit Trucks & Emergency Vehicles:			
Spans 40′ or less	33%	N/A	N/A
Legal, Permit Trucks & Emergency Vehicles Spans greater than 40′:			
Smooth Riding Surface Along Approach onto the Bridge, Bridge Deck and Expansion Joints	10%	8	1, 2 or none
Minor Surface Deviations and Depressions	20%	6	3
Severe Impact to the Bridge	30%	3	4

Verify the conditions of the deck and joints to identify any deficiencies in the deck that would cause impact to the structure. For potholes less than 1″ deep use 20 percent impact, and use 30 percent impact for depths greater than 1″. For multi span bridges, take into consideration the type and location of the deficiency and whether Impact would be applicable to the entire structure or not. If the Inspection report has no NBI Code 1681 or BMS Flag 322, then assume Smooth approaches.

Live Loads

The moving loads shall be the HL-93 loading, the AASHTO legal loads (including three AASHTO trucks and notional rating load), and the two WSDOT overload vehicles (See Figures 13.1-1 and 13.1-3 thru 13.1-9) and the two Emergency Vehicles (See Figures 13.1-10 & 13.1-11). Inventory and operating ratings shall be calculated for the HL-93 truck. In cases where the rating factor for the Notational Rating Load (NRL) is below 1.00, then the single unit vehicles (SUV) shall be evaluated for posting, see MBE for SUV configurations.

13.1.2 Load Factor Method (LFR)

The load factor method can be applied to structures designed prior to October 2010. Ratings shall be performed per the MBE. Capacities, resistance factors, and distribution factors shall be based on the AASHTO *Standard Specifications* 17th edition.

Ultimate Method (LFR)

Rating Equation

$$RF = \frac{\Phi C - \gamma_{DL} D \pm S}{\gamma_{LL} LL (1+IM)} \quad (13.1.2\text{-}1)$$

Where:

RF = Rating factor
C = Nominal member resistance
Φ = Resistance factor based on construction material
D = Unfactored dead loads
LL = Unfactored live loads
S = Unfactored prestress secondary moment or shear
IM = Impact
γ_{DL} = Dead load factor for structural components and attachments
γ_{LL} = Live load factor

Dead and Live Load Factors

Dead load factor = 1.30
Live load factor = 2.17 (Inventory)
= 1.30 (Operating)

Impact (IM)

Truck	IM	NBI Element 1681	BMS Flag 322
Design and Legal loads (Inventory & Operating)	Span	N/A	N/A
Permit Loads:			
Smooth Riding Surface Along Approach onto the Bridge, Bridge Deck and Expansion Joints	10%	8	1, 2, or none
Minor Surface Deviations and Depressions	20%	6	3
Severe Impact to the Bridge	30%	3	4

If the inspection report has no NBI Code 1681 or BMS Flag 322, then assume smooth approaches.

Impact (IM) for design and legal loads is span dependent:

$$IM = \frac{50}{(125+L)} \quad (13.1.2\text{-}2)$$

Where:

L is equal to span length

When rating the full section of a bridge, like a box girder or 3D truss, or crossbeams, which have two or more lanes, the following formula applies when rating emergency vehicles or overload trucks.

$$RF = \frac{C - \gamma_{DL} D \pm S - \gamma_{LL} LL_{lgl}(1+IM)}{\gamma_{LL} LL(1+IM)} \quad (13.1.2\text{-}3)$$

The formula above assumes that there is one overload truck occupying one lane, and one of the legal trucks occupying each of the remaining lanes. Trucks shall be placed in the lanes in a manner that produces the maximum forces. The LL_{lgl} shown in the equation above corresponds to the maximum effect of the legal trucks(s). The γ_{LL} corresponds to the live load factor for the overload truck and is the same for both legal and overload trucks. The same multiple presence factor for the total number of lanes loaded should be applied to all loads.

Resistance Factors (LFR) Method

The resistance factors for NBI ratings shall be per the latest AASHTO *Standard Specifications*. Following are the NBI resistance factors assuming the member is in good condition:

Steel members:	1.00 (Flexure) 1.00 (Shear)
Prestressed concrete	1.00 (Flexure, positive moment) 0.90 (Shear)
Post-tensioned, cast-in-place:	0.95 (Flexure, positive moment) 0.90 (Shear)
Reinforced concrete:	0.90 (Flexure) 0.85 (Shear)

For prestressed and post-tensioned members, where mild reinforcing steel is used to resist negative moment, the resistance factors for reinforced concrete section shall be used in the ratings.

In cases where there is deterioration in a member, the cross section shall be reduced based on the inspection report. For cases where deterioration in members is described in general terms, reduce resistance factors of member by 0.10 for BMS Condition State of 3, and reduce resistance factors by 0.20 for BMS Condition State of 4. The engineer should consider the quantity of each element in a fair or poor condition state and the notes describing the condition of an element when determining the appropriate resistance factor.

Service Method (LFR) Method

Prestressed and post-tensioned members in positive moment regions, and where post-tensioning is continuous over the supports, shall also be rated based on allowable stresses at service loads. The lowest rating factor between service and ultimate methods shall be the governing inventory rating.

Inventory Rating

Concrete Tension:

$$RF = \frac{6\sqrt{f'_c} - (F_d + F_p + F_s)}{F_l\,(1+IM)} \qquad (13.1.2\text{-}4)$$

Concrete Compression:

$$RF = \frac{0.60f'_c - (F_d + F_p + F_s)}{F_l\,(1+IM)} \qquad (13.1.2\text{-}5)$$

$$RF = \frac{0.40f'_c - {}^1/_2\,(F_d + F_p + F_s)}{F_l\,(1+IM)} \qquad (13.1.2\text{-}6)$$

Prestressing Steel Tension:

$$RF = \frac{0.80f_y^* - (F_d + F_p + F_s)}{F_l\,(1+IM)} \qquad (13.1.2\text{-}7)$$

Operating Rating

Prestressing Steel Tension:

$$RF = \frac{0.90 f_y^* - (F_d + F_p + F_s)}{F_l\,(1+IM)} \qquad (13.1.2\text{-}8)$$

Where:

RF = Rating factor
f'_c = Compressive strength of concrete
F_d = Dead load stress
F_p = Prestressing stress
F_s = Stress due to secondary prestress forces
F_l = Live load stress
IM = Dynamic load allowance (Impact)
f_y* = Prestressing steel yield stress

Allowable concrete stress shall be increased by 15 percent for overload vehicles. Impact is calculated same as ultimate method.

13.1.3 Allowable Stress Method (ASD)

The allowable stress method is applicable to only timber structures. Impact is not applied to timber structures.

Rating Equation:

$$RF = \frac{(F_a + F_d)}{F_l} \qquad (13.1.3\text{-}1)$$

Where:

RF = Rating factor
$*F_a$ = Allowable stress
F_d = Dead load stress
F_l = Live load stress

*F_a, for inventory rating, shall be per AASHTO *Standard Specifications*. For operating rating, F_A shall be increased by 33%

13.1.4 Live Loads

Live loads shall consist of:

HS20, Type 3, Type 3S2, Type 3-3, NRL, Legal Lane, OL1 and OL2 and EV2 and EV3 (See Figures 13.1-2 thru 13.1-11). The inventory and operating rating factors shall be calculated for all of the rated trucks except EV2 and EV3 where only the operating rating is required. In cases where the operating rating factor for the NRL load is below 1, then the single unit vehicles (SUV) shall be evaluated for posting, see MBE for SUV configurations.

Live load reduction factors (LFR Method).

Number of Lanes	Reduction Factor
1 Lane	= 1.0
2 Lanes	= 1.0
3 Lanes	= 0.90
>3 Lanes	= 0.75

13.1.5 Rating Trucks

Design Trucks

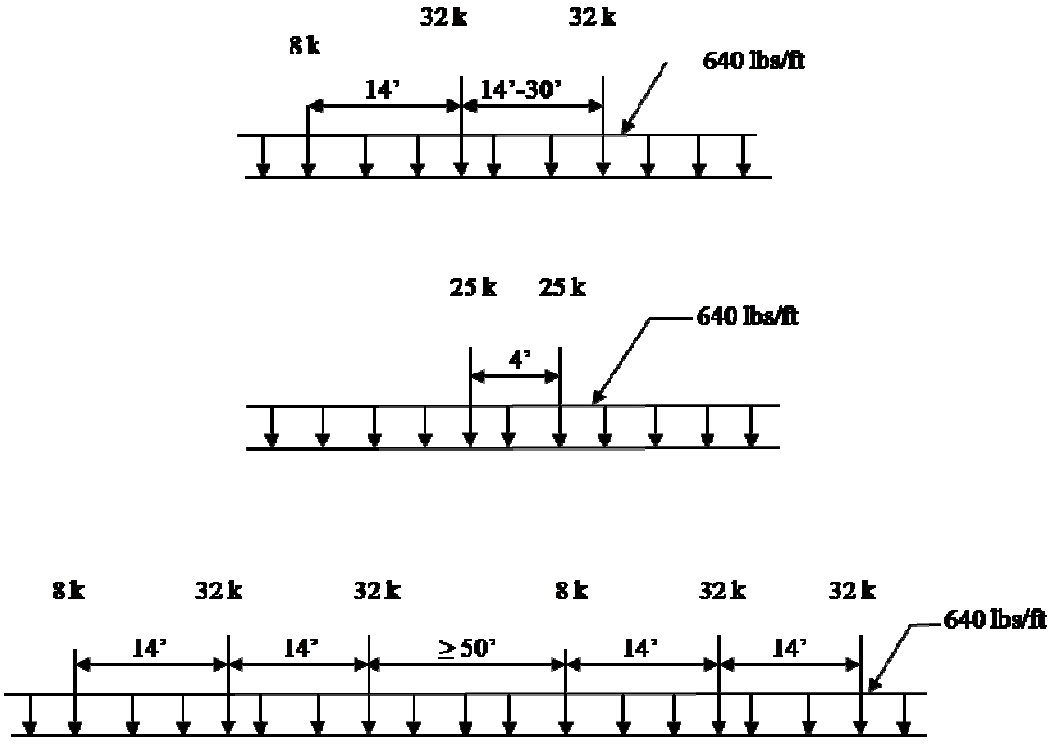

For negative moment and interior reaction (Reduce all loads to 90%).

HL-93 Load (LRFR Method)
Figure 13.1-1

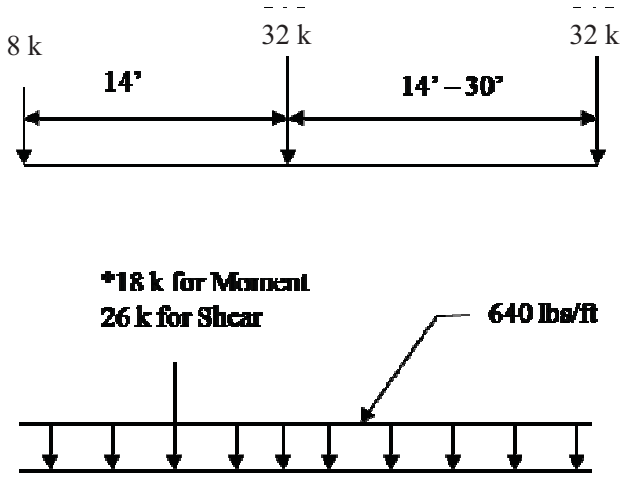

*In negative moment regions of continuous spans, place an equivalent load in the other spans to produce maximum effect.

HS-20 Load (LFR Method)
Figure 13.1-2

Legal Trucks

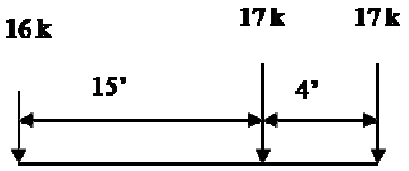

Type 3 (LRFR & LFR Methods)

Figure 13.1-3

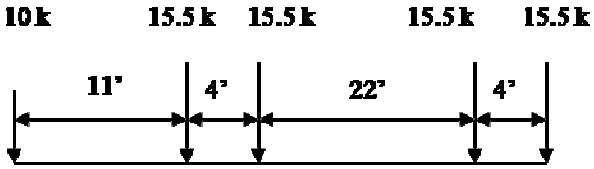

Type 3S2 (LRFR & LFR Methods)

Figure 13.1-4

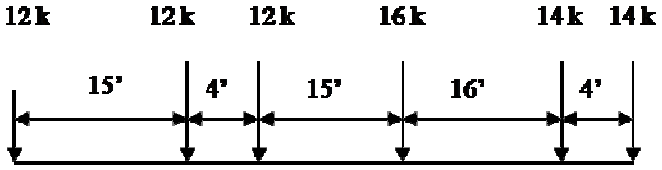

Type 3-3 (LRFR & LFR Methods)

Figure 13.1-5

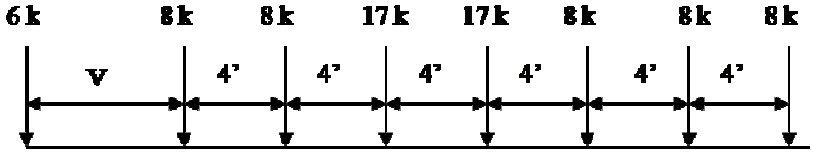

V varies from 6′-0″ to 14′-0″

Notional Rating Load (NRL) (LRFR & LFR Methods)

Figure 13.1-6

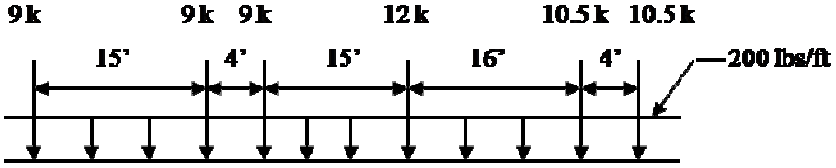

Legal lane is applicable to spans over 200' (LRFR & LFR Methods)

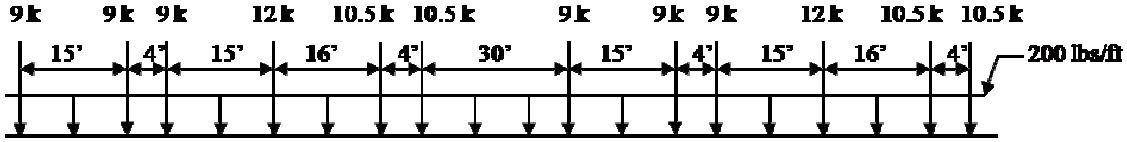

Legal lane for continuous spans and reactions at interior piers (LRFR Method)

Figure 13.1-7

Overload Trucks

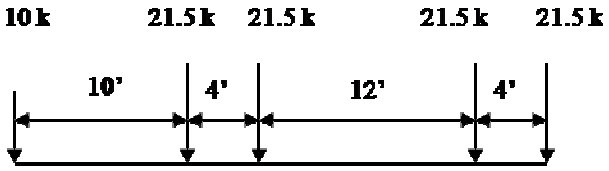

Overload 1* (LRFR & LFR Methods)
Figure 13.1-8

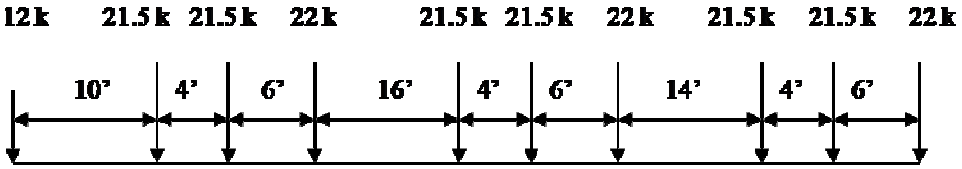

Overload 2* (LRFR & LFR Methods)
Figure 13.1-9

**When using the LRFR method for the overload trucks, for spans greater than 200' and when checking negative moment in continuous spans, apply 0.20 k/ft additional lane load to simulate closely following vehicles. The lane load can be superimposed on top of the permit load.*

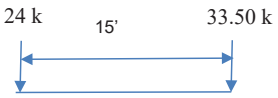

Type EV2 (LRFR & LFR Methods)
Figure 13.1-10

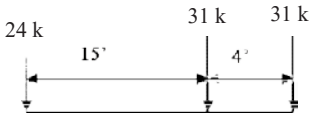

Type EV3 (LRFR & LFR Methods)
Figure 13.1-11

13.2 Special Rating Criteria

13.2.1 Dead Loads

Use 155 pcf for weight of the concrete; 140 pcf for weight of ACP/HMA and 150 pcf for concrete overlay. Use 50 pcf for weight of timber.

13.2.2 Live Load Distribution Factors

Live load distribution factors shall be per the corresponding AASHTO Specification based on the method used to perform the load rating.

For emergency vehicles, when using simplified equations per AASHTO Specifications, use the appropriate equation based on the number of design lanes. In cases where a 3D analysis is performed, or when rating a X-beam, place an EV in one lane and a legal truck in remaining lanes (NRL truck typically controls).

For overload trucks, a single lane distribution factor shall be used when rating longitudinal members on per member basis and the multiple presence factor shall be divided out when using the LRFR method. In cases where a 3D analysis is performed, or when rating a X-beam, place an overload in one lane and a legal truck in remaining lanes (NRL truck typically controls).

The number of lanes is dependent on the roadway width. For roadway width less than 18′, assume one lane for all trucks/loads. For roadway width between 18′ and 20′, the number of lanes for legal and permit loads shall correspond to the number of striped lanes on the bridge, and for the design trucks/loads use one lane. For roadway width between 20′ and 24′ use two lanes, each is equal to half the roadway width for all trucks/loads. For roadway width greater than 24′, the number of lanes shall be equal to the integer of the ratio of the roadway width divided by 12 for all trucks/loads.

13.2.3 Reinforced Concrete Structures

For conventional reinforced concrete members of existing bridges, the service check shall not be part of the rating evaluation.

Rating for shear shall be performed for all rating trucks.

Shear capacity shall be based on the Modified Compression Field Theory (MCFT) when using the LRFR method, longitudinal reinforcement should be checked for increased tension caused by shear.

13.2.4 Prestressed Concrete Structures

Allowable stresses for concrete shall be per the design specification corresponding to the method used in the rating. Note that for the LRFD method, this manual (Chapter 5) uses “0 ksi” allowable tension, however for rating purposes follow the design specifications.

Rating for shear shall be performed for all rating trucks.

Shear capacity shall be based on the MCFT when using the LRFR method, longitudinal reinforcement should be checked for increased tension caused by shear.

13.2.5 Concrete Decks

Typically bridge decks will not require rating unless the deck is post-tensioned. Bridge decks with NBI condition of 4 or less may be load rated at the discretion of WSDOT's Load Rating Engineer.

When rating of the deck is required, live load shall include all vehicular loads as specified in Section 13.1.5.

13.2.6 Concrete Crossbeams

Live loads can be applied to the crossbeam as moving point loads at any location between the curbs for integral crossbeams, or when it is conservative to do so. Otherwise, live loads shall be applied through the girder.

For integral crossbeams on prestressed girder bridges, the composite section shall be considered for all loads for the rating. The rating equation does not provide a method for considering staged load conditions.

13.2.7 In-Span Hinges

For in-span hinges, rating for shear and bending moment should be performed based on the reduced cross-sections at the hinge seat. Diagonal hairpin bars are part of this rating as they provide primary reinforcement through the shear plane.

13.2.8 Girder Structures

Girders shall be rated on a per member basis.

13.2.9 Box Girder Structures

Bridges with spread box girders shall be rated on a per box basis. Otherwise, the rating shall be for the full bridge cross-section for all applied loads.

13.2.10 Segmental Concrete Bridges

Segmental Concrete Bridges shall be rated per the latest MBE.

13.2.11 Concrete Slab Structures

Rate cast-in-place (CIP) solid slabs on a per foot of width basis. Rate precast panels on a per panel basis. Rate CIP voided slabs based on a width of slab equal to the predominant center-to-center spacing of voids.

When rating flat slabs on concrete piling, assume pin-supports at the slab/pile interface of interior piers and the slab continuous over the supports. If ratings using this assumption are less than 1.0, the piles should be modeled as columns with fixity assumed at 10′ below the ground surface.

13.2.12 Steel Structures

Checking of fatigue shall not be part of the rating evaluation.

For horizontally curved bridges, flange lateral bending, diaphragms and cross frames shall also be rated.

Pin and hanger assemblies shall be rated. Splices of fracture critical girders shall be rated.

13.2.13 Steel Floor Systems

Floorbeams and stringers shall be rated assuming they are pinned at the supports. Assume the distance from outside face to outside face of end connections as the lengths for the analysis. Live loads shall be applied to the floorbeam as moving point loads at any location between curbs, which produce the maximum effect.

Rating of connections is not required unless there is evidence of deterioration.

13.2.14 Steel Truss Structures

Typical steel trusses are rated on a per truss basis assuming all truss members have pinned connections. In some special cases, a 3D analysis may be required or fixed connections may be assumed.

In general, rate chords, diagonals, verticals, end posts, gusset plates, stringers and floorbeams. For state bridges, gusset plates shall be rated based on WSDOT's criteria (contact Load Rating Engineer for criteria) otherwise, use FHWA publication number FHWS-IF-09.014. Structural pins shall be rated; analyze pins for shear, and the side plates for bearing capacity.

Tension members and splices subjected to axial tension shall be investigated for yielding on the gross section and fracture on the net section.

For truss members that have been heat-straightened three or more times, deduct 0.1 from the resistance factor.

13.2.15 Timber Structures

Unless the species and grade is known, assume Douglas fir. Use select structural for members installed prior to 1955 and No. 1 after 1955. The allowable stresses for beams and stringers shall be as listed in the AASHTO Specifications.

The nominal dimensions should be used to calculate dead load, and the net dimensions to calculate section modulus. Unless the member is notched or otherwise suspect, shear need not be calculated.

13.2.16 Widened or Rehabilitated Structures

For widened bridges, rate crossbeams.

For existing portion of the widened bridge, a load rating shall be performed if the load carrying capacity of the longitudinal members is altered, or the dead and live loads have increased due to the widening.

Longitudinal rating for the widened portion will be required, except in cases where the widened portion has the same capacity of the existing structure or exceeds it. For example, if a slab bridge is widened and the reinforcing in the widened portion matches the existing structure, then no rating will be required. Another example, if a girder bridge is widened using same section as the existing bridge with the same or more reinforcing, and the same or less live and dead loads, then it will not require rating.

For rehabilitated bridges, a load rating shall be required if the load carrying capacity of the structure is altered by the rehabilitation.

13.2.17 Culverts

The distribution of live load thru fill shall be per the corresponding AASHTO Design Specification used for the rating. Structures with fill depth greater than 8 feet do not require rating, however that shall be noted in the letter file of the structure.

Use the load rating equation for box culverts and corresponding factors per the latest MBE and interims.

For the LRFR Method, HL-93 Load rating, a single lane distribution factor with multiple presence factor shall be used. For Legal, EV and overload trucks a single lane distribution factor shall be used; the multiple presence factor shall be divided out. The live load factor for Legal loads shall be 2.0; for EV and overloads, the live load factors shall be per Table 13.1-1.

13.2.18 Overloads

If the rating factor for either of the permit vehicles is less than 1.0 when rating full longitudinal cross-sections where distribution factors are not used (3D Model), or crossbeams, analyze them with a single overload truck and report the rating factors for both single and multiple lanes on the Load Rating Summary Sheet.

13.3 Load Rating Software

For the LRFR Method BridgeLink shall be used when rating prestressed concrete girders and CSIBridge shall be utilized for the analysis of the reinforced concrete or structural steel members. Bridg shall be used for rating all types of structures using the LFR method. Obtain WSDOT's Load Rating Engineer approval for the use of any other software prior to commencing any work.

For more complex structures such as steel curved girders and arches, different software may be used to analyze the loads after obtaining approval from WSDOT's Load Rating Engineer. Acceptable software currently includes CSiBridge or GT Strudl. Loads and capacities shall be tabulated in a manner that will make it simple for WSDOT to work with the data in the future. Method of tabulation shall be approved by WSDOT's Load Rating Engineer prior to commencing any work. Microsoft Excel shall be used for tabulation, and all cells in the spreadsheets shall be unlocked and any hidden code or functions shall be explained thoroughly in the report. Hand calculations shall be provided to verify all spreadsheets.

The above requirements apply to State owned structures.

13.4 Load Rating Reports

Rating reports shall be organized in such a manner that it is easy to follow and all assumptions are clearly stated. For complex large structures, include a table of contents and number the pages in the report.

The report shall consist of:

1. A Bridge Rating Summary sheet, as shown on Appendix 13.4-A1 (LFR) and 13.4-A2 (LRFR) reflecting the lowest rating factor. The summary sheet shall be stamped, signed and dated by a professional engineer licensed in the state of Washington. The summary sheet with the original signature shall be included in the Load Rating Report. A single Load rating summary sheet, stamped signed and dated, shall be provided in cases where different sections of a structure were designed and rated by different consultants. The summary sheet shall reflect the lowest rating factors for the different trucks for all sections of the structure.
2. A brief report of any anomalies in the ratings and an explanation of the cause of any rating factor below 1.00.
3. Hard copy of computer output files used for rating, and any other calculations such as, but not limited to dead loads, distribution factors or any required special analysis.
4. A complete set of plans for the bridge (applies to new designed bridges).
5. One compact disk which contains the final versions of all input and output files, and other calculations created in performing the load rating that can be opened and utilized in the appropriate program.
6. A minimum of 30 days is required for the Bridge Preservation Office review of any load rating submitted as part of a Design Build Contract.

All reports shall be bound in Accopress-type binders.

When the load rating calculations are produced as part of a design project (new, widening, or rehabilitation), the load rating report and design calculations shall be bound separately.

13.5 Appendices

Appendix 13.4-A1 LFR Bridge Rating Summary

Appendix 13.4-A2 LRFR Bridge Rating Summary

BRIDGE RATING SUMMARY

PE Stamp

Bridge Name: _____
Bridge Number: _____
SID Number: _____
Span Types: _____
Bridge Length: _____
Design Load: _____
Rated By: _____
Checked By: _____
Date: _____

Inspection Report Date: _____ Superstructure Condition ____
Overlay Thickness: _____ Substructure Condition ____
Rating Method: _____ Deck Condition ____

Truck	RF (INV)	RF (OP)	Controlling Point
AASHTO 1			
AASHTO 2			
AASHTO 3			
NRL			
EV2			
EV3			
OL-1			
OL-2			

NBI Rating	RF	Tons (US)	Controlling Point
Inventory			
Operating			

Remarks:

13.4-A1

BRIDGE RATING SUMMARY

PE Stamp

Bridge Name: _____
Bridge Number: _____
SID Number: _____
Span Types: _____
Bridge Length: _____
Design Load: _____
Rated By: _____
Checked By: _____
Date: _____

Inspection Report Date: _____ Substructure Condition ____
Rating Method: _____ Deck Condition ____
Overlay Thickness: _____ Superstructure Condition ____

Truck	RF	γ	Controlling Point
AASHTO 1			
AASHTO 2			
AASHTO 3			
NRL			
EV2			
EV3			
OL-1			
OL-2			

NBI Rating	RF	γ	Controlling Point
Inventory (HL-93)			
Operating (HL-93)			

Remarks:

13.4-A2

13.99 References

1. AASHTO LRFD *Bridge Design Specification*
2. AASHTO S*tandard Specifications for Highway Bridges*, 17th edition
3. AASHTO *Manual For Bridge Evaluation*
4. WSDOT *Bridge Inspection Manual* M 36-64

Chapter 14 Accelerated and Innovative Bridge Construction

Contents

14.1 Introduction 14-1
14.1.1 General 14-1
14.1.2 ABC Methods 14-2

14.2 Application of ABC 14-3
14.2.1 Economics of ABC 14-3
14.2.2 Practical Applications 14-3
14.2.3 Prefabricated Bridge Elements and Systems 14-4
14.2.4 Prefabricated Systems 14-7
14.2.5 Project Delivery Methods 14-8
14.2.6 Decision Making Tools 14-8

14.3 Structural Systems 14-11
14.3.1 Precast Bent System Design for High Seismic Regions 14-11
14.3.2 Geosynthetic Reinforced Soil Integrated Bridge System 14-40
14.3.3 Precast Decks 14-40

14.4 Innovative Bridge Construction 14-43
14.4.1 Self-Centering Columns 14-43
14.4.2 Shape Memory Alloy 14-44

14.5 Shipping, Handling and Erection 14-47
14.5.1 Lifting Devices 14-47
14.5.2 Handling, Storage and Shipping 14-47
14.5.3 Tolerances 14-48
14.5.4 Assembly Plans 14-48
14.5.5 Element Sizes 14-49

14.6 Installation Method Options 14-50
14.6.1 Crane Sizing 14-50
14.6.2 Lateral Sliding 14-50
14.6.3 Self-Propelled Modular Transporters 14-51

14.7 Examples of Accelerated and Innovative Bridge Construction 14-53

14.99 References 14-55

Chapter 14 Accelerated and Innovative Bridge Construction

14.1 Introduction

14.1.1 General

The purpose of this chapter is to provide guidance for the planning and implementation of projects that may benefit from the application of rapid bridge construction technologies and methods. This chapter was prepared to provide bridge engineers with a basic understanding of different Accelerated Bridge Construction (ABC) methods available, help guide project specific selection of ABC methods, and to encourage the use of the ABC methods described in this chapter, or other innovative approaches to rapid bridge construction. It was also prepared to provide guidance with the design and detailing of precast concrete superstructure and substructure elements for accelerated bridge construction. For the sake of this chapter, ABC and Innovative Bridge Construction are encompassed in the term "ABC."

This chapter is written in accordance with the AASHTO *Guide Specifications for LRFD Bridge Seismic Design*, 2nd Edition. It is WSDOT's application of the Federal Highway Administration's Every Day Counts. It is intended to compliment the documents listed below:

- *Accelerated Bridge Construction Manual*, Publication Number FHWA-HIF-12-013
- *Development of a Precast Bent Cap System for Seismic Regions*, NCHRP Report 681
- *Connection Details for Prefabricated Bridge Elements and Systems*, Publication Number FHWA-IF-09-010, March 2009

Modern implementations of ABC have been demanded by tight traffic control requirements in urban areas. Bridges used to be constructed on new alignments, connecting communities together in modern ways for the first time where there was no traffic and lower demand to travel from one community to another. Prior to modern times, the advancements made during the Industrial Revolution advanced new materials and construction techniques sped up construction. We saw bridge construction transform from stone construction used in ancient times, to include steel, concrete, and members subject to much larger forces than in the past. It's the expressed desire here to apply the benefits of new advancements in materials and construction techniques to a wider array of projects and take the position of minimal time on site the expectation of every project.

The goal of ABC is to deliver projects earlier to the traveling public, reducing the impacts of on-site construction to motorists, promoting traveler and worker safety, and reducing environmental impacts. ABC uses different methods of project delivery and construction to reduce the project schedule, on-site construction time, and public impact. With the ever increasing demand on transportation infrastructure, and the number of bridges that are approaching the end of their service lives, the need for ABC becomes more apparent. ABC should be viewed as a subset of a larger accelerated project delivery effort encompassing all aspects of project development including contract administration through construction contract acceptance.

ABC methods are generally safer than conventional construction methods because much of the construction can be done offsite, away from traffic. Quality can also be improved because the construction is often completed in a more controlled environment compared to on-site conditions. Ease of construction and design can be improved as standardized bridge pieces are developed. The use of ABC comes with challenges that need to be overcome on a project-specific basis, often accelerating the schedule increases the cost of the project. This increased project delivery cost can be offset by reductions in road user costs and economic loss to the affected communities.

14.1.2 ABC Methods

Many different methods to facilitate ABC are available. Some of those methods are discussed in greater detail later in this chapter. They include precast bridge piers, geosynthetic reinforced abutments with precast slab or deck girder superstructures, precast decks, precast footings or entire abutments, or any combination thereof.

Installation of these bridge elements can be aided with use of lateral sliding of large bridge members or self-propelled modular transporters, or heavy cranes. Contractually, ABC can be aided with the use of alternate project delivery methods, such as Design-Bid-Build, Design-Build or General Contractor/Construction Manager.

14.2 Application of ABC

14.2.1 Economics of ABC

Long construction time allotments may provide for a cheaper bottom line on a project, but they introduce a number of unassigned risks that provide an intangible cost to the contractor, and ultimately to the state.

Construction times have significant economic cost to the state through traffic delays and interruption to commerce. It may come as longer traffic jams in already busy urban areas, or as crowded interstates between urban centers, especially on holiday weekends, and subsequent traffic jams on local roads adjacent to the highway. It's impossible to know how many businesses are affected when a highway is jammed for many years while it is widened. Considerations related to lane rental rates should be considered as part of this to address funding issues.

The risk of injury to the traveling public also affects the cost to a project. The loss of one life of someone traveling through a construction zone not only devastates the lives of those affected, but it can cost the state a lot of money in compensation for the families of those individuals. And while we expect the public to travel safely through our work zones, the reality is they often do not. Shorter construction times saves lives, and it saves money.

The best method to minimize costs associated with either of these risks is to minimize the exposure time to these risks. With the estimating tools available, estimates of these costs demonstrate an overall project savings to the end users when projects are constructed with rapid construction methods.

Another cost to consider is estimating the cost of unfamiliar technologies. Until ABC methods are more fully understood by contractors, the estimated costs of the intangible and unfamiliar things will likely be higher than methods common today. This is due to the added risk associated with those unfamiliar construction techniques. With more exposure and familiarity come lower costs as a contractor develops their means and methods. With the risks mentioned above, in some states, it has been shown that a high percentage of the public approves the use of ABC, knowing that the immediate project cost can be significantly higher.

14.2.2 Practical Applications

Locations where time is critical, or access is difficult are where ABC Construction methods would be most fully utilized. Building piers in busy highway medians, installing columns in waters with narrow fish window times, or building bridges on mountain roads far from concrete production facilities are excellent places to consider ABC. ABC Methods may also be fitting for construction over a large body of water, where access is difficult and heavy moving equipment, perhaps on a barge, is easy to bring to the site. Pouring concrete underwater can be difficult, and perhaps installing a precast element in the water may be easier than constructing a coffer dam.

Other locations to consider are where the overall footprint of a job site may be a concern. Realize that accessing the connections of precast members can take up a lot of space and may not be necessary. Rebar would come with the precast member instead of being placed before the concrete, eliminating the need for access for workers and equipment near to the ends of the precast member. By moving more duties off site,

less space is need on site, and the offsite location could be at a less sensitive location. If there were concerns with disturbing the adjacent ground, smaller construction sites near a bridge could be beneficial.

Bridge designs with many similar pieces, such as long retaining walls, bridge decks, or bridges with many piers are also good candidates for ABC. The smaller pieces can be shipped in on semi-trucks and placed immediately. The repetition would bring more economic value to the ABC component of the project and bring the cost of the precast piece down.

Often precast pieces can be used to provide a structural shell that will serve multiple purposes. Precast pieces can be used to form a caisson or a coffer dam that will define a dry work zone which be filled in with concrete later. The shell could simply provide a void that makes shipping a piece easier, which will get filled with concrete when another bridge portion is poured.

Construction schedules can make ABC worth considering. Lateral sliding of bridge superstructures have been used such that an existing bridge can be used until the critical moment where one bridge is rolled out, and a new one rolled in. Months of construction can take place next to the location the bridge would be used, and in a matter of hours the new structure could be slid into place.

In general, where time on a job site ought to be minimized, ABC would make a good choice to consider.

14.2.3 Prefabricated Bridge Elements and Systems

For the sake of bridge design, use of Prefabricated Bridge Elements and Systems (PBES) is one strategy that can meet the objectives of accelerated bridge construction. PBES are structural components of a bridge that are built offsite, or near-site of a bridge, and include features that reduce the onsite construction time and mobility impact time that occur from conventional construction methods. PBES includes innovations in design and high-performance materials and can be combined with the use of project delevery and material procurement methods that invoke faster on-site construction. Because PBES are built off the critical path and under controlled environmental conditions, improvements in safety, quality, and long-term durability can be better achieved.

Prefabricated bridge elements can also be used in combination with other accelerated bridge construction methods. Commonly used prefabricated bridge elements are pre-stressed concrete girders, including I-girders, adjacent inverted T-beams and boxes, full depth and partial depth deck panels and prefabricated abutments, pier crossbeams, pier columns, and footings, as well as precast three-sided and four-sided box culverts.

Prefabricated bridge elements are used to reduce the on-site time required for concrete forming, rebar tying and concrete curing, saving weeks to months of construction time. Deck beam elements eliminate conventional onsite deck forming activities. To reduce onsite deck forming operations, deck beam elements are typically placed in an abutting manner.

Prefabricated elements are often of higher quality than conventional field-constructed elements, because the concrete is cast and cured in a controlled environment. The elements are often connected using high strength grout, and post-tensioning or pre-tensioning. Close attention should be given to these connections.

Connection strength is often a concern when with PBESs. There are many tools available to provide durable, high strength connections. The grouted duct technology discussed in detail later in this chapter is one method. Other methods are grouted duct couplers, key and socket connections, and cast-in-place joints encompassing precast members with high strength concrete.

A. Prefabricated Elements

Prefabricated Elements are a category of PBES which comprise a single structural component of a bridge. Under the context of ABC, prefabricated elements reduce or eliminate the onsite construction time that is needed to build a similar structural component using conventional construction methods. An element is typically built in a prefabricated and repeatable manner to offset costs.

B. Bridge Deck Elements

Bridge deck elements eliminate activities that are associated with conventional bridge deck construction, which typically includes onsite installation of forms, overhang bracket and formwork installation, reinforcing steel placement, paving equipment set up, concrete placement, and concrete curing, all typically occurring in a sequential manner.

Examples of Bridge Deck Elements include:

- partial-depth precast bridge deck panels
- full-depth precast bridge deck panels with and without longitudinal post-tensioning
- lightweight precast bridge deck panels
- FRP bridge deck panels
- steel grid (open or filled with concrete)
- orthotropic bridge deck
- other prefabricated bridge deck panels made with different materials or processes

C. Beam Elements

Beam Elements are composed of two types: “deck beam” elements and “full-width” beam elements

- Deck Beam Elements eliminate conventional onsite deck forming activities as noted above. To reduce onsite deck forming operations, deck beam elements are typically placed in an abutting manner.

  Examples of Deck Beam Elements include:

  – adjacent deck bulb tee beams
  – adjacent double tee beams
  – adjacent inverted tee beams
  – adjacent box beams or voided slabs
  – modular beams with decks
  – post-tensioned concrete thru beams
  – other prefabricated adjacent beam elements

Note: Although not preferred under the context of ABC, a separate construction phase, performed in an accelerated construction manner, may be required to finish the deck. A deck connection closure pour, overlay, or milling operation using innovative materials can be used to expedite the completion of the deck. In some situations, the placement of overlays can be accomplished during off-peak hours after the bridge is opened to traffic.

- Full-width beam elements eliminate conventional onsite beam placement activities. They are typically rolled, slid, or lifted into place to allow deck placement operations to begin immediately after placement. Given their size and weight, the entire deck is not included.

  Examples of Full-Width Beam Elements include:

  – truss span without deck
  – arch span without deck
  – other prefabricated full-width beam element without deck

D. Prefabricated Pier Elements

Prefabricated pier elements eliminate activities that are associated with conventional pier construction, which typically includes onsite form installation, reinforcing steel placement, concrete placement, and concrete curing, all typically occurring in a sequential manner.

Examples of Prefabricated Pier Elements include:

- prefabricated caps for caisson or pile foundations
- precast spread footings
- prefabricated columns
- prefabricated column crossbeams
- prefabricated combined crossbeams and columns
- other prefabricated pier elements

E. Prefabricated Abutment and Wall Elements

Abutment and wall elements eliminate activities that are associated with conventional abutment and wall construction, which typically includes form installation, reinforcing steel placement, concrete placement, and concrete curing, all occurring in a sequential manner.

Abutment and wall elements may be built in a phased manner using conventional construction methods, but under or near an existing bridge without disrupting traffic.

Examples of Abutment and Wall Elements include:

- prefabricated caps for caisson or pile foundations
- precast footings, wingwalls, or back walls
- sheet piling, steel or precast concrete
- prefabricated full height wall panels used in front, behind, or around foundation elements
- cast-in-place concrete abutments and walls used with or without precast elements if built in a manner that is accelerated, or has no impact to mobility

- Mechanically Stabilized Earth (MSE), modular block, or proprietary walls, Geosynthetic Reinforced Soil (GRS) abutment
- other prefabricated abutment or wall elements

F. Miscellaneous Elements

Miscellaneous elements either eliminate various activities that are associated with conventional bridge construction or compliment the use of PBES.

Examples of Miscellaneous Elements include:

- precast approach slabs
- prefabricated parapets
- deck closure joints
- overlays that can be placed in an accelerated construction manner that complements or enhances the durability and rideability of the prefabricated element
- other prefabricated miscellaneous elements

Note: Any cast-in-place concrete or overlay placement operation should be performed in a manner that reduces the impacts to mobility. This may require work that is performed under "Fast Track Contracting" methods with incentive/disincentive clauses, nighttime or off-peak hour time frames, or work done entirely off line. Innovative materials may be needed to expedite placement times such as the use of rapid-set/early-strength-gain materials or Ultra High Performance Concrete (UHPC) in closure pours.

14.2.4 Prefabricated Systems

Prefabricated Systems are a category of PBES that consists of an entire superstructure, an entire substructure, or a total bridge that is procured in a modular manner such that traffic operations can be allowed to resume after placement. Prefabricated systems are rolled, launched, slid, lifted, or otherwise transported into place, having the deck and preferably the barriers in place such that no separate construction phase is required after placement. Due to the manner in which they are installed, prefabricated systems often require innovations in planning, engineering design, high-performance materials, and "Structural Placement Methods".

Benefits of using prefabricated systems include:

- Minimal utility relocation and right-of-way take, if any at all
- No-to-minimal traffic detouring over an extended period of time
- Preservation of existing roadway alignment
- No use of temporary alignments
- No temporary bridge structures
- No-to-minimal traffic phasing or staging
- **Superstructure Systems –** Superstructure systems include both the deck and primary supporting members integrated in a modular manner such that mobility disruptions occur only as a result of the system being placed. These systems can be rolled, launched, slid, lifted, or transported in place, onto existing or new substructures (abutments and/or piers) that have been built in a manner that does not impact mobility.

Examples of Superstructure Systems include:

- full-width beam span with deck
- through-girder span with deck
- truss span with deck
- arch span with deck
- other prefabricated superstructure systems

- **Total Bridge Systems –** Prefabricated superstructure/substructure systems include either the interior piers or abutments which are integrated in a modular manner with the superstructure as described above. Superstructure/substructure systems can be slid, lifted, or transported into place onto new or existing substructures that have been built in a manner that does not impact mobility.

  Examples of Total Bridge Systems include:

  - rigid frames with decks and parapets
  - other prefabricated superstructure/pier systems

14.2.5 Project Delivery Methods

At WSDOT, region engineers determine which project delivery method ought to be employed at about the time a project is scoped. *Design Manual* M 22-01 ought to be considered by region engineers. Realize the bridge engineer may not be a part of that portion of the project's development. Tools commonly considered by region engineers are various project delivery methods, incentivizing techniques and ways to provide options in contracting to get the most value out of a project.

14.2.6 Decision Making Tools

Figures 14.2.6-1 and 14.2.6-2 are tools that should be used for each bridge project, and considered at the Preliminary Plans stage of each project, or sooner. Both of these tools shall be used. It is expected each project will consider ABC to some degree. The questionnaire and flowchart provide some rational measure for how well suited a project may be for ABC.

The questionnaire is intended to review the entire project, including items beyond the immediate interests of the bridge, and assign a measure of relevance and priority to each item of concern. This assures that not only is a specific item being considered, but so is its significance to the project. The relevance value should be multiplied by the priority value for each question. The product of each of those numbers shall be added up at the bottom of the questionnaire, and that number will be the ABC Rating.

The flow chart is intended to be a situational evaluation regardless of magnitude or relevance of other items. To use the flowchart, the ABC Rating needs to be determined from the questionnaire, and the path one takes through the flowchart is based upon that rating. The expectation is that if ABC can be considered for a project with even a slight possibility for using ABC, it should be. At the end of the flowchart is the direction the designer ought to pursue. The designer will be instructed to either develop an ABC approach or consider conventional methods.

ABC DESIGN IMPACT QUESTIONNAIRE

PROJECT:

DATE:
COMPLETED BY:

CATEGORY	DECISION MAKING QUESTION	(R) RELEVANCE RANGE 0 = N.A. 1 = LOW TO 5 = HIGH	(P) PRIORITY RATING 1 = LOW 2 = MEDIUM 3 = HIGH	(R x P) SCORE
CONSTRUCTION TIME	ARE THERE WEATHER LIMITATIONS FOR CONVENTIONAL CONSTRUCTION?			
	IS THERE RESTRICTED CONSTRUCTION TIME DUE TO ENVIRONMENTAL SCHEDULES?			
	IS THERE RESTRICTED CONSTRUCTION TIME DUE TO ECONOMIC IMPACT?			
	HAS THE REGION EXPRESSED DESIRE TO COMPLETE THE BRIDGE CONSTRCUTION IN ONE SEASON?			
	IS THE BRIDGE CONSTRUCTION ON A CRITICAL PATH OF THE TOTAL PROJECT?			
ENVIRONMENTAL	DOES ABC MITIGATE A CRITICAL ENVIRONMENTAL IMPACT, ARCHAEOLOGICAL CONCERN, OR OTHER SENSITIVE ISSUE?			
USER COSTS AND DELAYS	DOES THE BRIDGE CARRY, OR IS IT OVER A ROUTE WITH A HIGH ADT AND/OR ADTT?			
	WOULD ABC SIGNIFICANTLY IMPROVE THE TRAFFIC CONTROL PLAN?			
	ARE ONLY SHORT TERM CLOSURES ALLOWED?			
	WILL CONVENTIONAL CONSTRUCTION CAUSE A SIGNIFICANT DELAY OR DETOUR TIME?			
	WILL BRIDGE CONSTRUCTION HAVE AN ADVERSE IMPACT ON THE LOCAL ECONOMY?			
SITE CONDITIONS	ARE THERE EXISTING RAILROADS THAT IMPACT THE CONSTRUCTION WINDOW OR ACTIVITIES?			
	ARE THERE EXISTING UTILITIES THAT IMPACT THE CONSTRUCTION WINDOW OR ACTIVITIES?			
	DOES THE SITE CAUSE PROBLEMS FOR CONVENTIONAL CONSTRUCTION METHODS?			
	IS THE BRIDGE OVER A WATERWAY?			
RISK MANAGEMENT	DOES ABC IMROVE WORKER SAFETY?			
	DOES ABC IMPROVE TRAVELER SAFETY?			
	DOES ABC ALLOW MANAGEMENT OF ANOTHER SPECIFIC RISK?			
OTHER	WILL REPETITION OF ELEMENTS ALLOW FOR ECONOMY OF SCALE?			
		TOTAL SCORE = ABC RATING =		

ABC Questionnaire
Figure 14.2.6-1

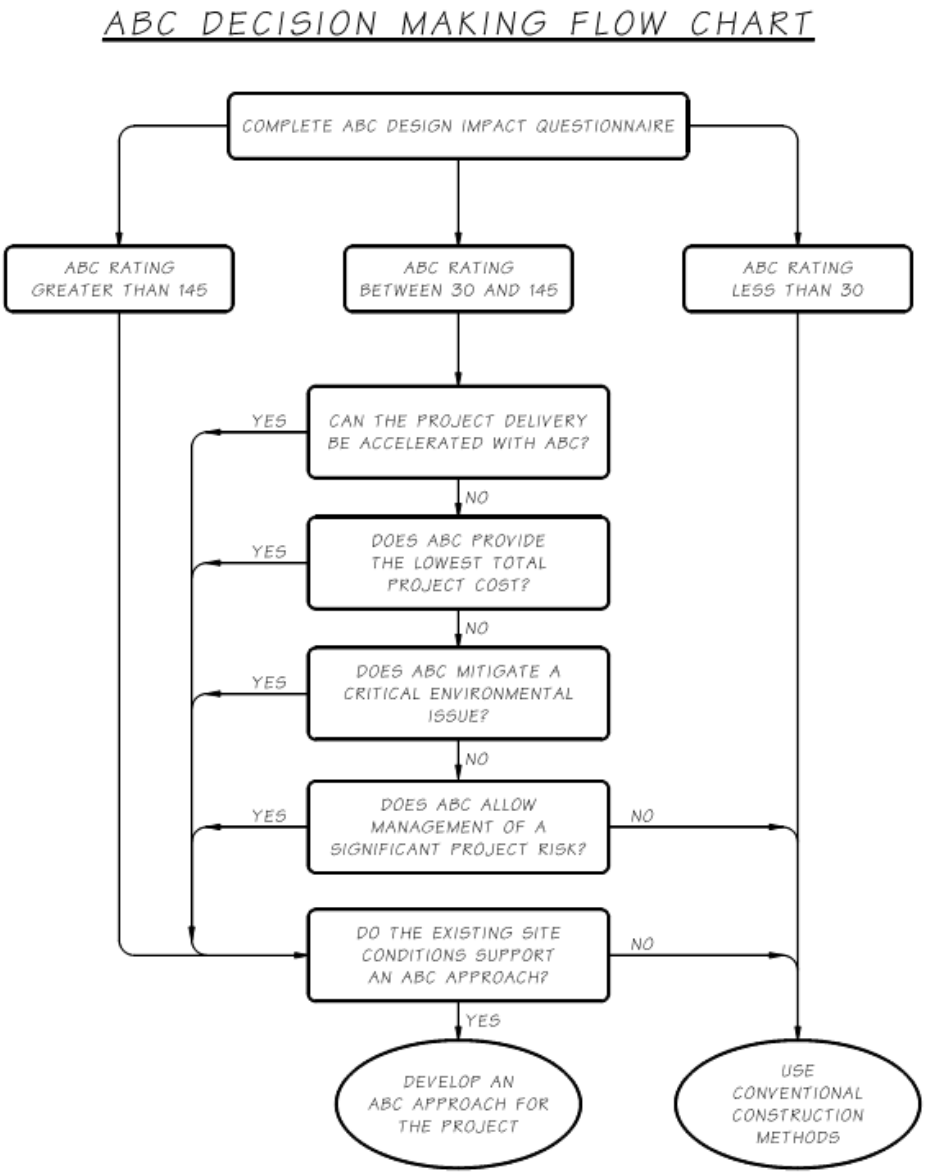

ABC Flow Chart
Figure 14.2.6-2

14.3 Structural Systems

This section explores a few structural systems that an engineer may wish to consider. The systems described here are ones WSDOT has reviewed and developed to a level that is ready for production work. There are other systems available in the referenced documents, and an engineer may wish to develop their own systems and details.

This section discusses the precast bent system in great detail. WSDOT has worked closely with researchers and is a leader in pursuing its development and considers this chapter an excellent guide for its implementation. While there's a lot of detail on the precast bent system discussed here, there are other resources available for the application of the other systems discussed. Those other resources ought to be reviewed when considering these systems.

14.3.1 Precast Bent System Design for High Seismic Regions

This article summarizes a precast bent system that has been developed to both speed up construction and perform well under seismic loading. The system is often referred to as the Highways for Life (HfL) system, Precast Pier System, or Precast Bent System. It's configured to be used with precast girder superstructures that are supported on crossbeams that are constructed in two phases. The first or lower-stage crossbeam is constructed, the girders are then set on this beam, and finally the second or upper-stage crossbeam is constructed using cast-in-place concrete to integrate the superstructure and substructure. This precast bent system is an adaptation of a common type of reinforced concrete bent or pier construction used throughout the United States. It utilizes the grout duct technology developed through university research.

Unique features of the precast bent system are a socket connection at the column-to-foundation connection and a grouted-duct arrangement at the column-to-crossbeam connection. This system utilizes precast columns and precast lower-stage crossbeams. The system also can include splices in the column to facilitate weight control for the columns, whereby splitting the column into multiple segments. This can control the weight of precast elements that must be transported. Similarly the precast crossbeam can be split into segments for the same reason. Both of these splice connections are configured to be capacity protected for seismic forces. The lower column socket connection has also been configured to be used with spread footings, pile caps and drilled shafts.

Large-scale laboratory testing has been completed and is reported in companion reports specifically covering each connection type. Design provisions have been crafted for use by designers to supplement the AASHTO SEISMIC 2nd Edition. Construction specifications are included in this chapter, as are design examples.

A demonstration project was constructed using this technology on a bridge in Washington State over Interstate 5, Bridge Number 12/118. The details of the design for this project are included in the paper "*Accelerated Bridge Construction in Washington State: From Research to Practice*" in the Fall 2012 PCI Journal, and so are construction photos and a lessons-learned section relating the construction contractor's feedback following construction. The development and deployment of this technology has been a success, and the owner, the Washington State Department of Transportation, continues to look for opportunities to apply the technology, along with other methods, to accelerate bridge construction in the state. The demonstration bridge is currently in service and is performing well, but has not been tested by an actual earthquake.

Design examples for precast bents can be found in the following publications:

- *Precast Bent Systems for High Seismic Regions Appendix B*, Publication Number FHWA-HIF-031-037-B.
- *Precast Bent Systems for High Seismic Regions Appendix C*, Publication Number FHWA-HIF-031-037-C.

14.3.1.1 Description of System

The bent system is comprised of precast columns supported by either spread footings or drilled shafts and a precast crossbeam that supports pre-stressed concrete girders. The bent is integrated with the superstructure using a cast-in-place full concrete diaphragm. The crossbeam thus created is a two-stage dropped crossbeam with the lower precast portion known as the first stage crossbeam and the upper diaphragm known as the second stage of the crossbeam. The bridge deck slab is cast on top of the girders and diaphragm. This concept is illustrated in Figures 14.3.1.1-1, 14.3.1.1-2 and 14.3.1.1-3.

The system consists of a socket connection at the foundation level and a grouted bar connection to the crossbeam. The foundation must be cast around the precast column to form the socket connection, and the interface between the column and foundation must be intentionally roughened to ensure vertical load carrying capacity. In the HfL Bent System, the connection to the crossbeam is intended to consist of large diameter bars such that fewer bars are required. These bars are grouted into steel ducts with generous diameters relative to the bars, 2 to 3 inches larger in diameter, to facilitate fit up as shown in Figure 14.3.1.1-1.

For many typical bridges a single precast column element is sufficient. However, the segmental column concept was included in the validation and HfL demonstration project.

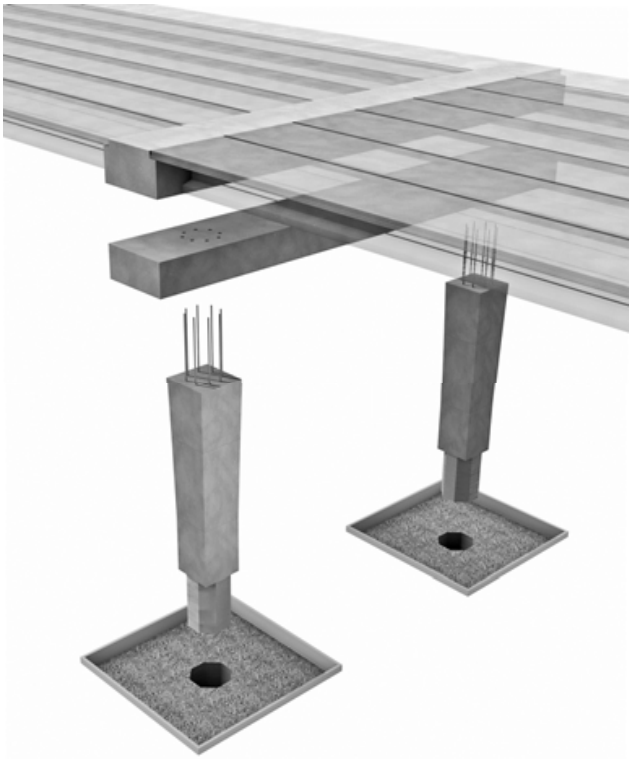

Precast Bent System, Exploded View
Figure 14.3.1.1-1

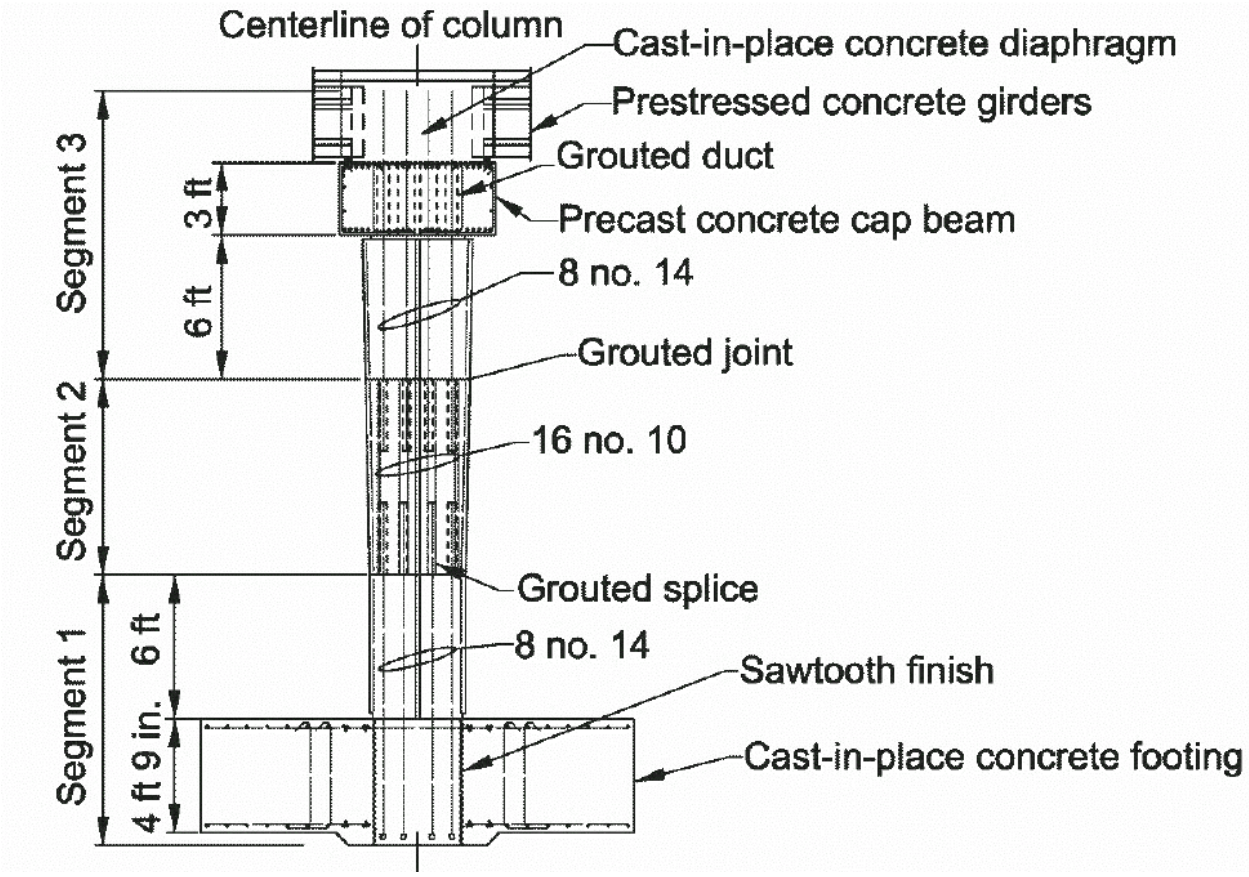

Elevation of Column and Pier
Figure 14.3.1.1-2

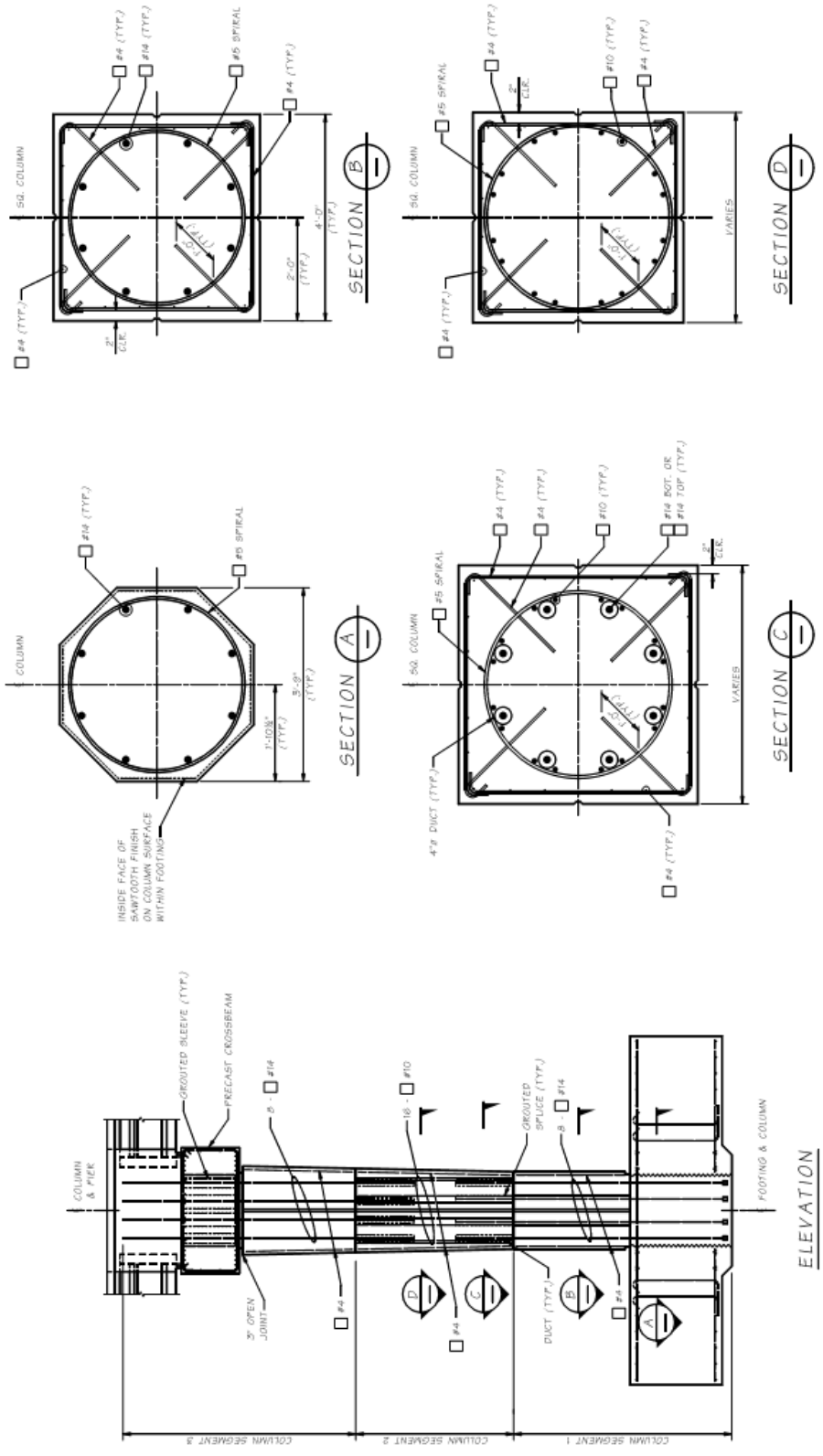

Elevation and Sections of Column and Pier
Figure 14.3.1.1-3

14.3.1.2 Design Philosophy

This process emulates cast-in-place connections with precast elements. CIP construction joints are typically detailed with dowels and lap splices. Emulation design replaces the traditional lap splice with a grouted duct sleeve. The design of column connections is especially difficult for high seismic zones. Confinement of column reinforcing is possible with precast concrete elements. The AASHTO design specifications do not mandate the confinement reinforcing bars be continuous from the column into the adjacent members footing or crossbeam. The confinement reinforcing can be terminated in the column and separate confinement reinforcement can be added to the adjacent element.

14.3.1.3 Design Provisions

The provisions specified in this Section 14.3, provide additional requirements to those in the main body of the AASHTO SEISMIC, 2nd Edition. Requirements below shall be followed when designing a precast bent system. Sections of AASHTO Seismic that are not changed herein still apply to the design of the bent system.

Interior joints of multi-column bents shall be considered "T" joints for joint shear analysis. Exterior joints shall be considered knee joints and require special analysis and detailing that are not addressed herein, unless special analysis determines that "T" joint analysis is appropriate for an exterior joint based on the actual bent configuration. Criteria to establish appropriate design and detailing provisions for exterior joints shall be approved by the Bridge Design Engineer.

14.3.1.4 Geometry and General Requirements

Geometric requirements are driven by the research that supports the development of the precast bent system. The intent of this article is to describe the type of construction tested by universities to support the documents listed in Section 14.1.1. It is expected that any geometric configuration selected would have adequate university research behind it to support it. If university research has been performed defending new geometric conditions, they may be used if approved by the WSDOT Bridge Design Engineer.

The following geometry requirements shall apply to precast bent systems without approval of the WSDOT Bridge Design Engineer:

- Columns shall be located under crossbeams.
- Grouted ducts shall have their centerlines oriented vertical.
- Footings abutting precast columns shall be poured around the end of the column.
- No grouted ducts allowed in footings.
- Precast columns shall not be connected to precast footings.
- Crossbeam splices shall be lapped rebars constructed within a cast-in-place closure pour.
- Crossbeam splices shall be located at points of counter flexure of the crossbeam and not within B_{eff} of the column, as defined in Section 5.1.3.D.3.

- Column splices shall incorporate grouted ducts on at least one abutting end of a column within a joint. Rebar that is expected to protrude into a duct shall be cast with the rest of the column segment.
- Geometric requirements required in other bridge design requirements shall still be met.

Other requirements are listed below:

- WSDOT's *Standard Specifications* M 41-10 shall be followed.
- Grouted ducts shall be a semi-rigid, galvanized, ferrous, corrugated metal duct.
- Concrete segments may be constructed on site or at a precast manufacturing facility.

Embedment requirement for grouted duct splices, regardless of seismic design category, are shown in Table 14.3.1.4-1.

Bar Size	Nominal Duct Size (in.)	Embedment/Bar Diameter	Embedment Length, (in.)
#3	2	29	12
#4	2.5	27	15
#5	3	21	15
#6	3	18	15
#7	3	21	20
#8	3.5	18	20
#9	3.5	16	20
#10	3.5	18	25
#11	4	16	25
#14	4	16	30
#18	4.5	16	40

Embedment Requirement for Grouted Duct Splices
Table 14.3.1.4-1

14.3.1.5 Joint Design for SDC A

14.3.1.5.1 Joint Performance

Moment-resisting connections shall be designed to transmit the unreduced elastic seismic forces in columns.

Bridges designed for SDC A are expected to be subjected to only minor seismic displacements and forces; therefore, a force-based approach is specified to determine unreduced elastic seismic forces, in lieu of a more rigorous displacement-based analysis. However, some SDC A bridges may be exposed to seismic forces that may induce limited inelasticity, particularly in the columns. For this reason, AASHTO Seismic 8.2 states that when S_{D1} is greater than or equal to 0.10 but less than 0.14, minimum column shear reinforcement shall be provided according to the requirements of AASHTO Seismic 8.6.5 for SDC B subject to AASHTO Seismic 8.8.9 for the length over which this reinforcement is to extend.

Although AASHTO Seismic 8.8.9 does not specify placement of transverse column reinforcement into the joint, Sections 5.11.4.1.5 and 5.11.4.3 of the AASHTO LRFD referenced by the alternative provisions in AASHTO Seismic 8.2 and 8.8.9 specify placement of transverse reinforcement into the joint for a distance not less than one-half the maximum column dimension or 14.0 in. from the face of the column connection into the adjoining member. Therefore, according to these alternative provisions, when S_{D1} is greater than or equal to 0.10 but less than 0.14, minimum transverse reinforcement is required for cast-in-place joints. When S_{D1} is less than 0.10, transverse shear reinforcement is not required. For all values of S_{D1} in SDC A, the designer may choose to conservatively provide a "rational" design for joint reinforcement as specified in AASHTO Seismic 8.13 and C8.13.1.

Precast crossbeam connections for SDC B, C, and D are designed and detailed to provide a force transfer mechanism through the joint and crossbeam based on research. The precast crossbeam design provisions for SDC A are more than those for SDC B, but are deemed appropriate for all values of S_{D1} in SDC A.

14.3.1.5.2 Joint Proportioning

A. Precast Crossbeam Connections

The provisions of AASHTO Seismic 8.13.2 shall be used for joint proportioning, except that the nominal yield stress of the column longitudinal reinforcement may be used in lieu of the expected yield stress.

For SDC A, joint proportioning of crossbeams only requires the designer to provide sufficient length to anchor column longitudinal reinforcement in the joint. Minimum embedment length provisions in Table 14.3.1.4-1 for column longitudinal reinforcement anchored in precast crossbeam connections are appropriate.

B. Grouted Duct Connection

Transverse reinforcement in the form of tied column reinforcement, spirals, hoops, or intersecting spirals or hoops shall be provided. Minimum transverse reinforcement in the joint for grouted duct connections shall be based on AASHTO Seismic Equation 8.13.3-1 and 8.13.3-2. Spacing of transverse reinforcement shall not exceed $0.3D_S$ or 12 in, where D_s is the depth of the superstructure.

AASHTO Seismic 8.13.5 and C8.13.5 summarize related design provisions and background on non-integral crossbeam systems using grouted duct or crossbeam pocket connections.

Minimum transverse reinforcing in the joint is required to help ensure the connection does not become a weak link in a precast bent system. However, the additional joint shear reinforcement required for SDC B, C, and D is not required.

Grouted duct connections shall be reinforced such that vertical stirrups with a total area, A_s^{jvi}, spaced evenly over a length Dc through the joint shall satisfy:

$$A_s^{jvi} \geq 0.08 A_{st} \qquad \text{Equation 14.3.1.5.2-1}$$

and shall be detailed as shown in Figure 14.3.1.5.2-1 through Figure 14.3.1.5.2-3. Details of the connection include ducts, vertical stirrups inside the joint, and bedding layer reinforcement are shown in Figure 14.3.1.5.2-1.

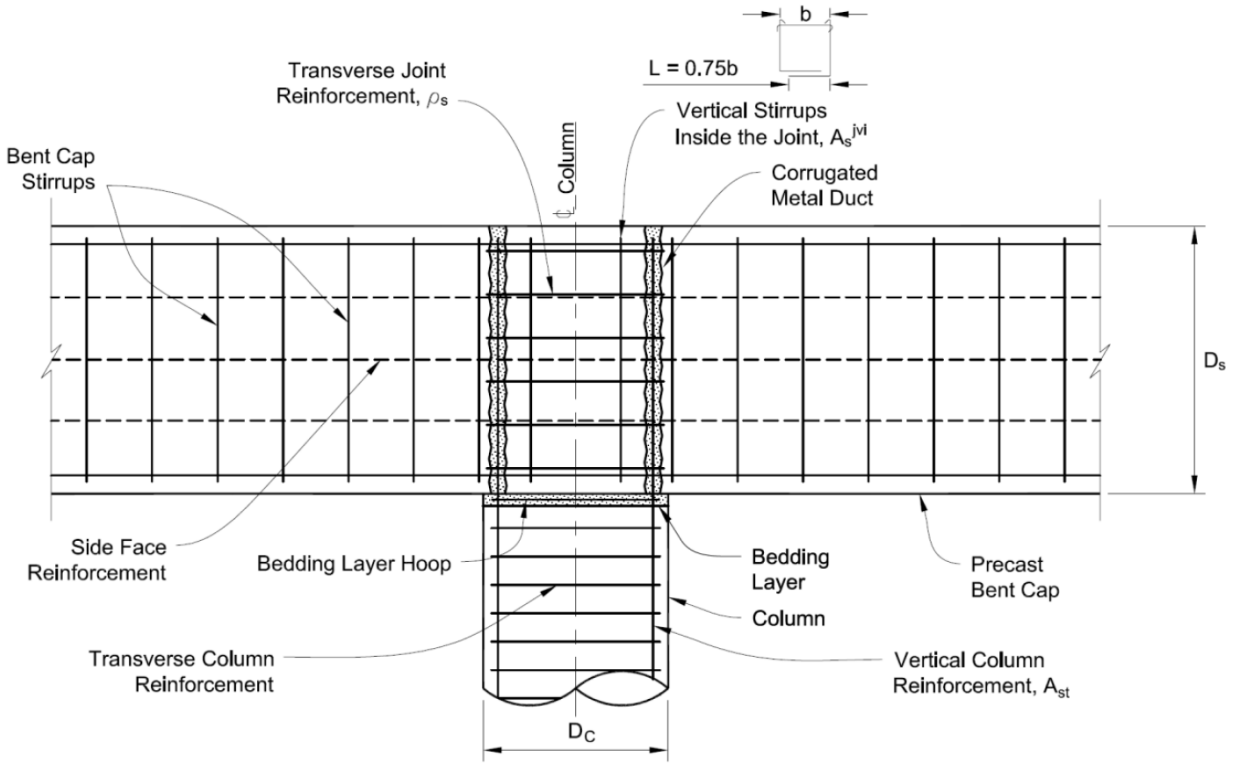

Grouted Duct Joint Shear Reinforcement Details SDC A (Section)
Figure 14.3.1.5.2-1

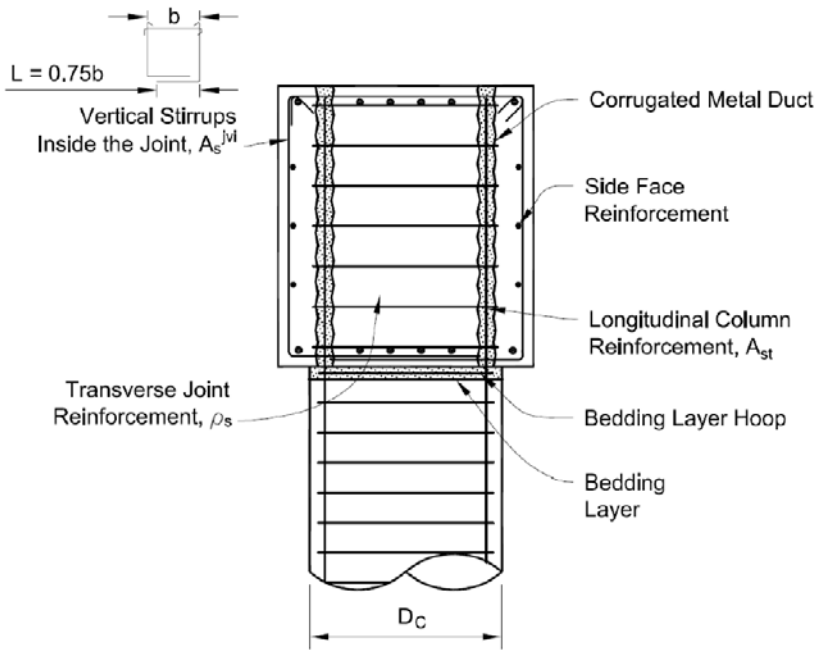

Grouted Duct Joint Shear Reinforcement Details SDC A (Elevation)
Figure 14.3.1.5.2-2

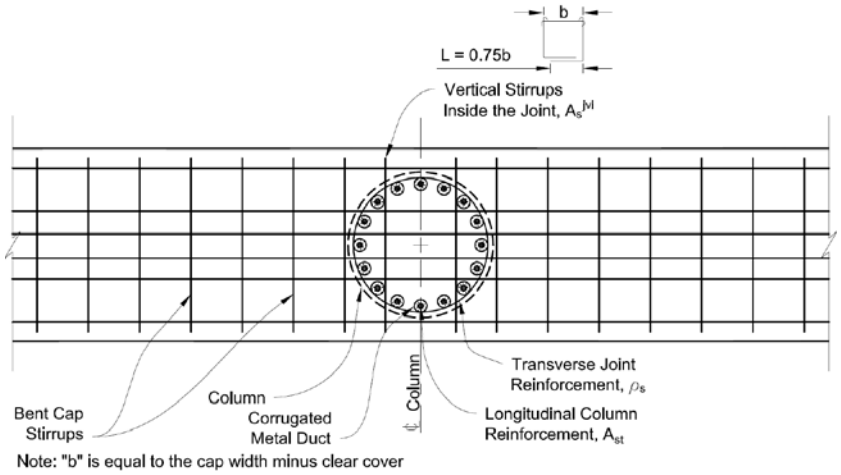

Grouted Duct Joint Shear Reinforcement Details SDC A (Plan)
Figure 14.3.1.5.2-3

C. Crossbeam Pocket Connection

A minimum thickness of helical, lock-seam, corrugated steel pipe shall be used to satisfy the transverse reinforcement ratio requirement. The thickness of the steel pipe shall be determined from AASHTO Seismic Equation 8.13.3-1 and as provided in AASHTO Seismic 8.13.3. Alternatively, Equation 14.3.1.5.2-2 may be conservatively used:

$$t_{pipe} \geq \max \begin{vmatrix} 0.04 \dfrac{\sqrt{f'_c}\, D'_{cp}}{f_{yp} \cos\theta} \\ 0.0598in \end{vmatrix} \qquad \text{Equation 14.3.1.5.2-2}$$

Where:

f'_c = nominal compressive strength of the crossbeam pocket concrete (ksi)
D'_{cp} = average diameter of confined crossbeam pocket fill between corrugated steel pipe walls (in)
f_{yp} = nominal yield stress of steel pipe (ksi)
θ = angle between horizontal axis of bent crossbeam and pipe helical corrugation or lock seam (degrees)

Vertical stirrups inside the joint shall consist of double leg stirrups or ties of a bar size no smaller than that of the crossbeam transverse reinforcement. A minimum of two stirrups or equivalent ties shall be used.

D. Joint Shear Reinforcement

Vertical stirrups inside a grouted duct or crossbeam pocket joint shall consist of double leg stirrups or ties of a bar size no smaller than that of the crossbeam transverse reinforcement. A minimum of two stirrups or equivalent ties shall be used.

Figure 14.3.1.5.2-4 through Figure 14.3.1.5.2-6 show details of the connection, including the steel pipe, vertical stirrups inside the joint, and bedding layer reinforcement.

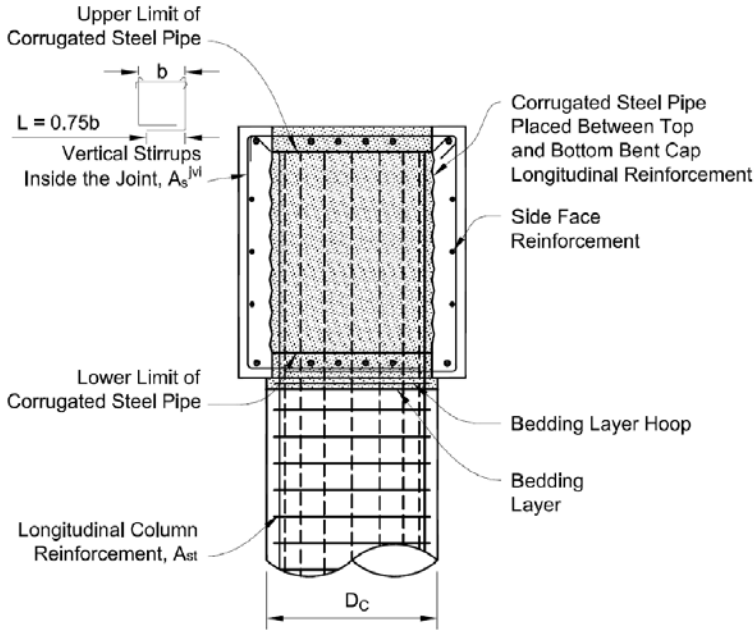

Crossbeam Pocket Joint Shear Reinforcement Details SDC A (Section)
Figure 14.3.1.5.2-4

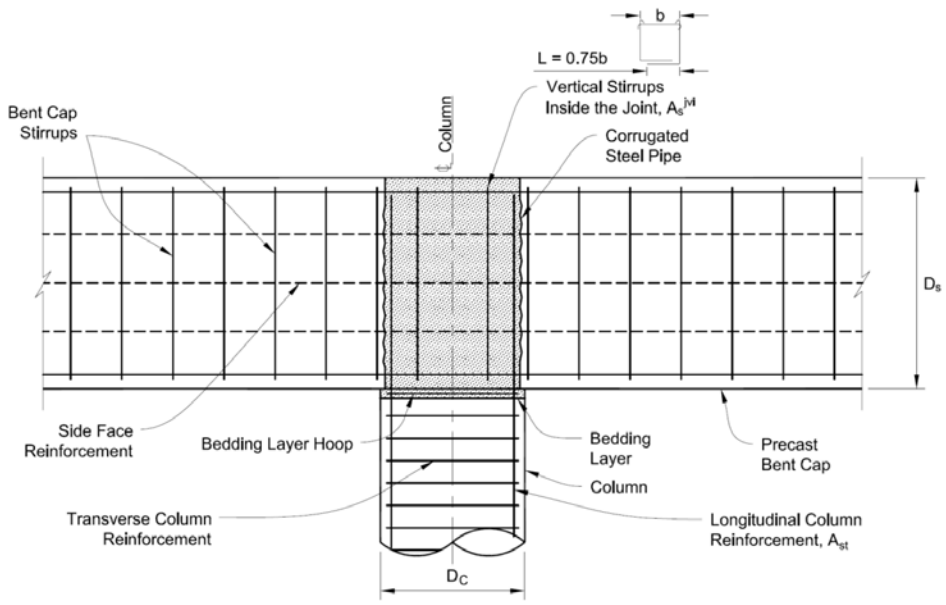

Crossbeam Pocket Joint Shear Reinforcement Details SDC A (Elevation)
Figure 14.3.1.5.2-5

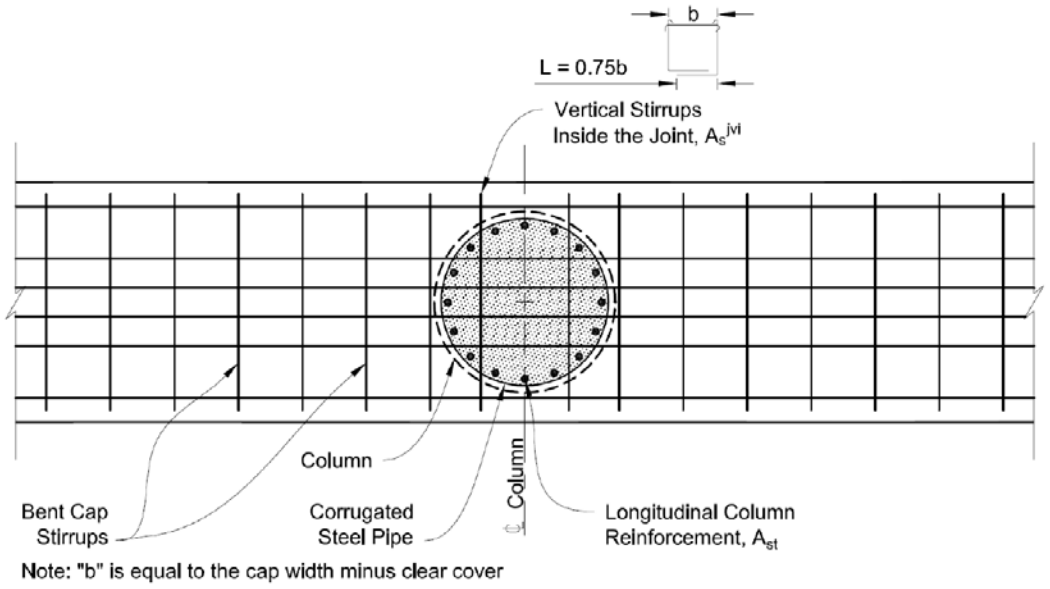

Crossbeam Pocket Joint Shear Reinforcement Details SDC A (Plan)
Figure 14.3.1.5.2-6

14.3.1.6 Joint Design For SDC B

14.3.1.6.1 Joint Performance

Moment-resisting connections shall be designed to transmit the lesser of the forces produced when the column has reached its plastic hinging overstrength moment capacity, M_{po}, or the unreduced elastic seismic forces in columns. However, where the unreduced elastic seismic column moment exceeds the idealized plastic moment capacity, M_p, but is less than M_{po}, connections shall be designed to transmit the forces produced when the column has reached M_{po}.

Precast crossbeam connections adopt the more conservative provisions mentioned in AASHTO Seismic 4.11.1 and C4.11.1, i.e., explicit capacity checks should be made to ensure that no weak link exists in the ERS. This is achieved by implementing the provisions of AASHTO Seismic 8.14.2, 8.14.3, and 8.14.5. These provisions help ensure that joints accommodate forces in an essentially elastic manner.

For SDC B it is anticipated that M_{po} will be based on the column section designed for load cases other than seismic.

14.3.1.6.2 Precast Connections

A. Precast Crossbeam Connection

The provisions of AASHTO Seismic 8.13.2 shall be used for joint proportioning, except that the design moment to be used in AASHTO Seismic 8.13.2-10 shall be that determined from Section 14.3.1.6.1. For precast crossbeams, the provisions of AASHTO Seismic 8.13.3 shall be used for determining minimum joint shear reinforcing. Other joint shear reinforcing shall be provided as described below.

As mentioned in the commentary of AASHTO Seismic 8.3.2, SDC B structures are designed and detailed to achieve displacement ductility, μ_D, of at least 2. To ensure this, joints should be proportioned based on a check of principal stress levels. In addition, minimum joint shear reinforcing is required. However, a rational design is required for additional joint shear reinforcement when principal tension stress in the joint, p_t, is greater than or equal than allowable.

B. Grouted Duct Connection

Where the principal tension stress in the joint, p_t, is greater than or equal to $0.11 (f'_c)^{0.5}$, then the transverse reinforcement in the joint, ρ_s, shall satisfy AASHTO Seismic Equation 8.13.3-2, and the additional joint reinforcement is required as indicated in AASHTO Seismic 8.13.4 for integral crossbeams or AASHTO Seismic 8.13.5 for non-integral crossbeams. Where the principal tension stress in the joint, p_t, is less than $0.11 (f'_c)^{0.5}$, grouted duct connections shall be reinforced in accordance with the requirements of AASHTO Seismic 8.13.3.-1 and shall be detailed as shown in Figure 14.3.1.6.2-1 through Figure 14.3.1.6.2-3. Details of the connection include ducts, vertical stirrups inside the joint, and bedding layer reinforcement.

Vertical stirrups inside the joint shall consist of double leg stirrups or ties of a bar size no smaller than that of the crossbeam transverse reinforcement. A minimum of two stirrups or equivalent ties shall be used.

AASHTO Seismic 8.13.5 and C8.13.5 summarize related design provisions and background on non-integral crossbeam systems using grouted duct or crossbeam pocket connections.

Research has demonstrated that a limited number of vertical stirrups distributed within the joint region of a grouted duct connection assists in the joint force transfer mechanism and limits opening of joint cracks.

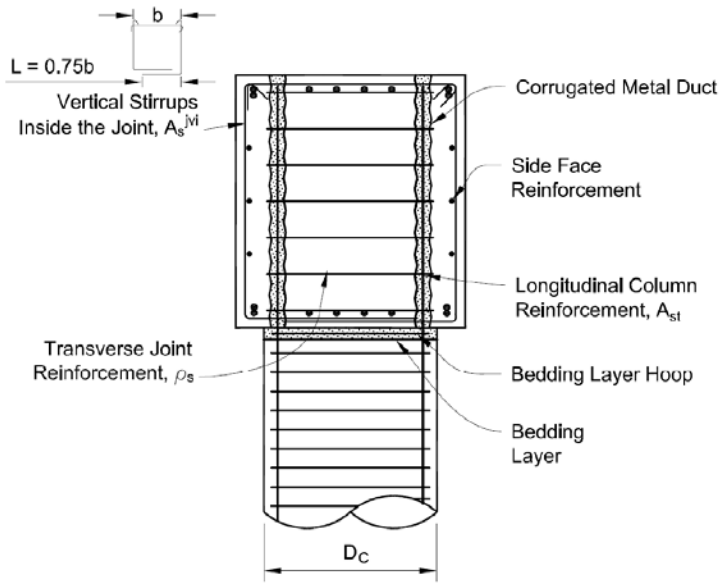

Grouted Duct Joint Shear Reinforcement Details SDC B (Section)
Figure 14.3.1.6.2-1

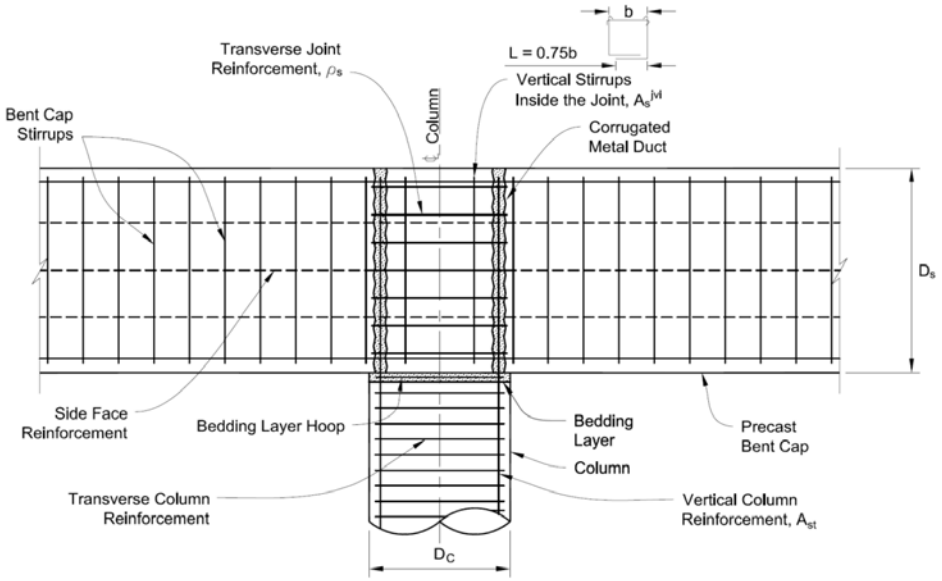

Grouted Duct Joint Shear Reinforcement Details SDC B (Elevation)
Figure 14.3.1.6.2-2

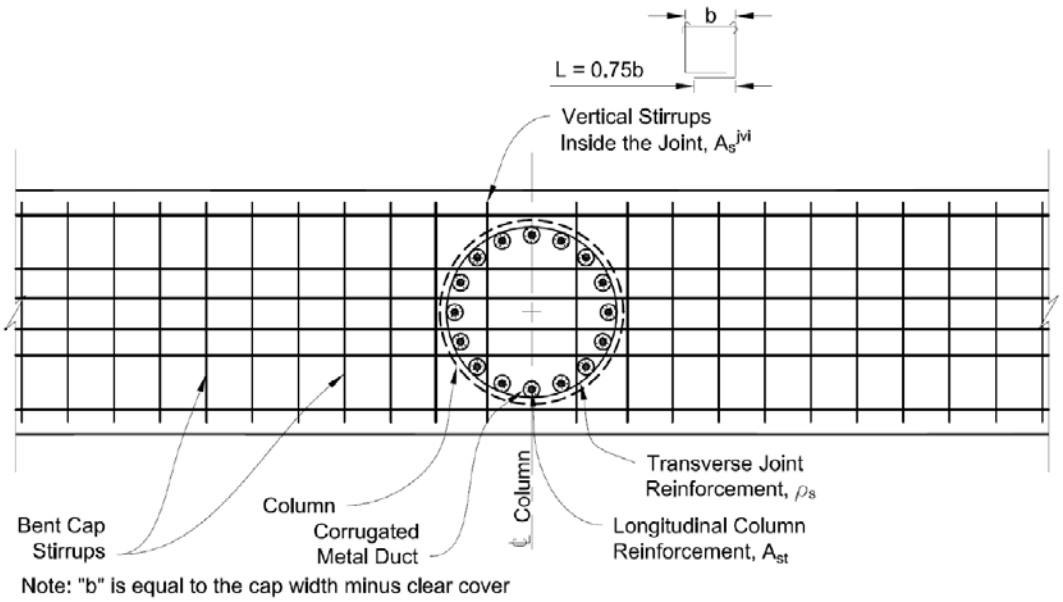

Grouted Duct Joint Shear Reinforcement Details SDC B (Plan)
Figure 14.3.1.6.2-3

C. Crossbeam Pocket Connection

A minimum thickness of helical, lock-seam, corrugated steel pipe shall be used to satisfy the transverse reinforcement ratio requirements specified in AASHTO Seismic 8.13.3.1 and Equation 14.3.1.5.2-2.

Crossbeam pocket connections shall be reinforced with vertical stirrups inside the joint in accordance with Section 14.3.1.6.2B. Joints shall be detailed as shown in Figure 14.3.1.6.2-4 through Figure 14.3.1.6.2-6. Details of the connection include the steel pipe, vertical stirrups inside the joint, and bedding layer reinforcement.

A supplementary hoop may be placed one inch from each end of the corrugated pipe. The supplemental hoop shall match the size and type of transverse reinforcement required for the column plastic hinging region.

A supplementary hoop may be optionally placed at each end of the duct to limit dilation and potential unraveling. This reinforcement may be included as a simple, inexpensive, and conservative measure.

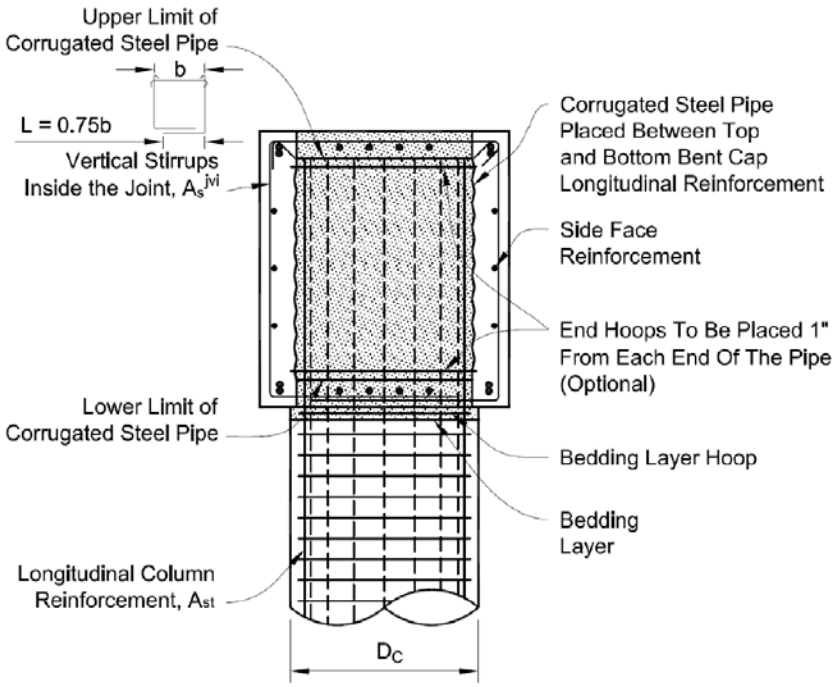

Crossbeam Pocket Joint Shear Reinforcement Details SDC B (Section)
Figure 14.3.1.6.2-4

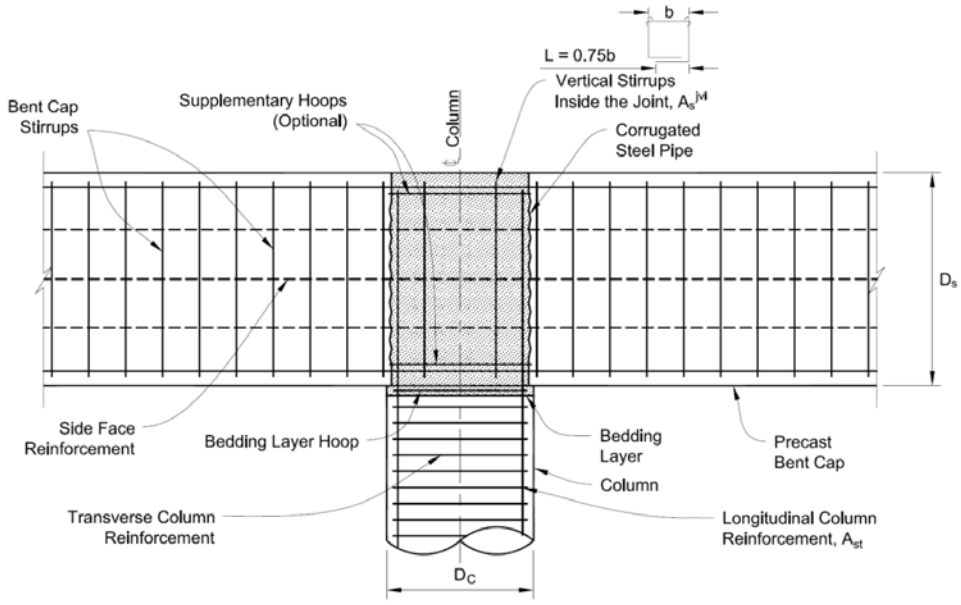

Crossbeam Pocket Joint Shear Reinforcement Details SDC B (Elevation)
Figure 14.3.1.6.2-5

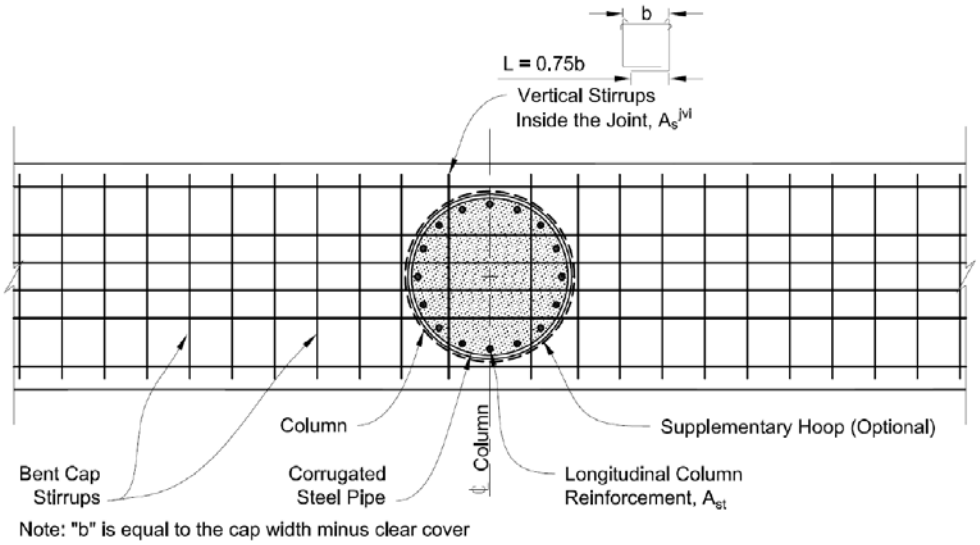

Crossbeam Pocket Joint Shear Reinforcement Details SDC B (Plan)
Figure 14.3.1.6.2-6

14.3.1.7 Joint Design for SDCs C and D

The HfL Bent System may only be used with Types 1, 3, 4, and 5 ERS as illustrated in AASHTO Seismic Figure 3.3-1a. The EREs permitted within the bent are Type 1, 2, 7, 8, and 13 as illustrated in AASHTO Seismic Figure 3.3-1b. No other EREs are permitted when the HfL bent is used.

Although the EREs are in the permissible category, the HfL bent system, itself, is only permissible with WSDOT Bridge Design Engineer's approval.

The HfL Bent System has only been validated with spread footings, drilled shafts and plastic hinging restricted to the columns. Due to the limited application of the system, the EREs are all considered permissible with WSDOT Bridge Design Engineer's approval. As experience is gained with the system this restriction may be eased.

The global design strategy of bridges that use the HfL bent system are expected to be Type 1 systems, because the validation has been conducted only on such systems. Type 3 systems could be designed using the bent system, although additional development effort would be required. The system as currently developed relies on a two-stage crossbeam that is integral with an open soffit girder superstructure. There is currently no configuration for a non-integral bent, which would be required with a Type 3 global design strategy.

14.3.1.7.1 Local Displacement Capacity for SDCs B and C

AASHTO Seismic Equations 4.8.1-1, 2 and 3 may be used to assess the local displacement capacity of the HfL bent system in SDCs B and C.

14.3.1.7.2 Analytical Plastic Hinge Length

AASHTO Seismic Equations 4.11.6-1 and 3 apply to the HfL bent system without modification.

The HfL bent system is an emulative system that behaves similarly to CIP systems of the same configuration. Validation testing reported by Pang, et.al (2008), Haraldsson, et.al. (2011), and Hung, et.al. (2012) has shown that the calculations of displacement capacity, including the analytical plastic hinge length and other elements of the procedure may be performed using the same approach as for CIP elements.

14.3.1.7.3 Joint Performance

Moment-resisting connections shall be designed to transmit the maximum forces produced when the column has reached its overstrength capacity, M_{po}.

14.3.1.7.4 Joint Proportioning

Moment-resisting joints shall be proportioned so that the principal stresses satisfy the requirements of Equation 8.13.2-1 and Equation 8.13.2-2.

A. Precast Crossbeam Connections

Column longitudinal reinforcement shall be extended into precast crossbeams as close as practically possible to the opposite face of the crossbeam. Column longitudinal bars should be extended into joints a sufficient depth to ensure the bars can achieve approximately 1.3 times the expected yield strength of the reinforcement.

Compressive strength of the grout for grouted duct connections and compressive strength of the concrete fill for crossbeam pocket connections should be based on the requirements of Section 8.13.8.3 of the AASHTO LRFD *Bridge Construction Specifications* (2010).

B. Grouted Duct Connection

Grouted duct connections shall follow the requirements of AASHTO Seismic 8.13.3 for minimum transverse reinforcement in the joint. Spacing of transverse reinforcement shall not exceed $0.3D_s$ or 12 in.

Where the principal tension stress in the joint, p_t, as specified in AASHTO Seismic 8.13.2, is less than $0.11\ (f'_c)^{0.5}$, then transverse reinforcement in the joint, ρ_s, shall satisfy AASHTO Seismic Equation 8.13.3-1. Where the principal tension stress in the joint, p_t, is greater than or equal to $0.11\ (f'_c)^{0.5}$, then transverse reinforcement in the joint, ρ_s, shall satisfy AASHTO Seismic Equation 8.13.3-2, and additional joint reinforcement is required as indicated in AASHTO Seismic 8.13.4 for integral crossbeams or AASHTO Seismic 8.13.5 for non-integral crossbeams.

Where the principal tension stress in the joint, p_t, is greater than or equal to $0.11\ (f'_c)^{0.5}$, grouted duct connections shall be detailed to include additional joint shear reinforcement as specified in AASHTO Seismic 8.13.4. In addition, vertical stirrups inside the joint shall consist of double leg stirrups or ties of a bar size no smaller than that of the crossbeam transverse reinforcement. A minimum of two stirrups or equivalent ties shall be used. Figure 14.3.1.7.4-1 through Figure 14.3.1.7.4-3 show details of the connection, including ducts, joint shear reinforcement, and bedding layer reinforcement assuming additional joint shear reinforcement is required.

The grouted duct connection uses corrugated ducts embedded in the precast crossbeam to anchor individual column longitudinal bars. The ducts and bedding layer between the crossbeam and column or pile are grouted with high strength non-shrink cementitious grout to complete the precast connection. Ducts are sized to provide adequate tolerance for crossbeam fabrication and placement and must be accounted for in sizing the crossbeam to minimize potential congestion.

Joint shear reinforcement requirements are essentially the same as for cast-in-place connections, except that minimum vertical stirrups are required in the joint where the principal tension stress in the joint, p_t, is less than $0.11\ (f'_c)^{0.5}$ per AASHTO Seismic 8.13.3.

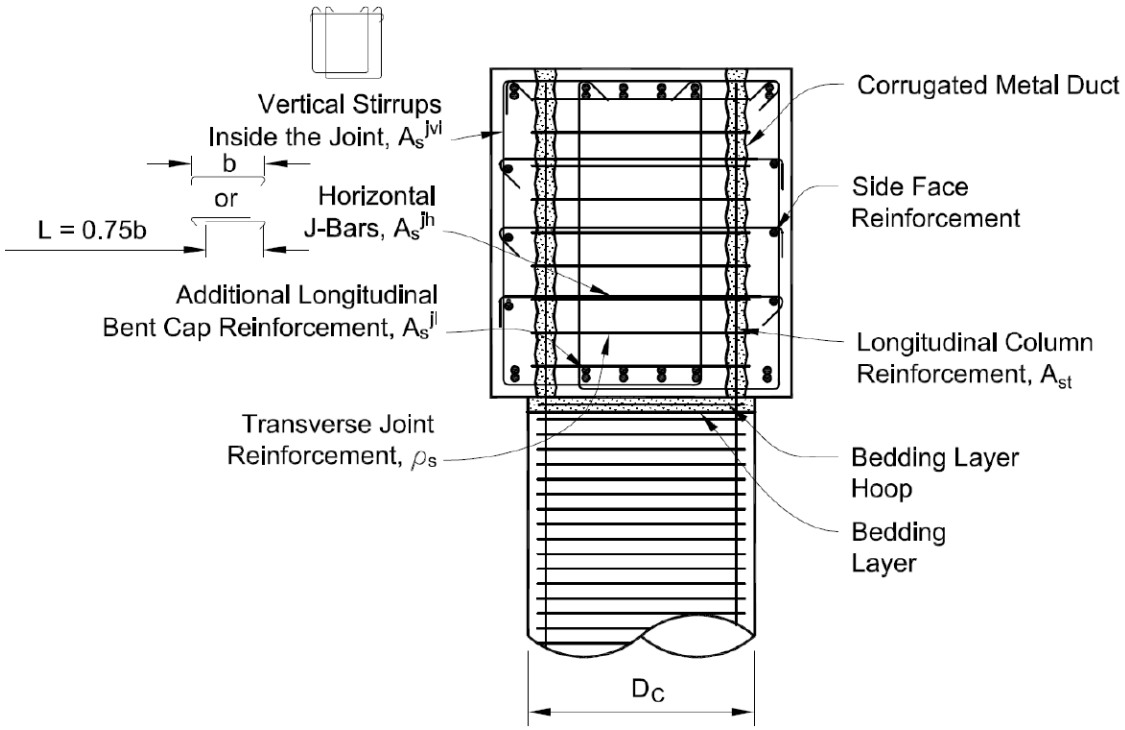

Grouted Duct Full Ductility Joint Shear Reinforcement Details SDC C and D (Section)
Figure 14.3.1.7.4-1

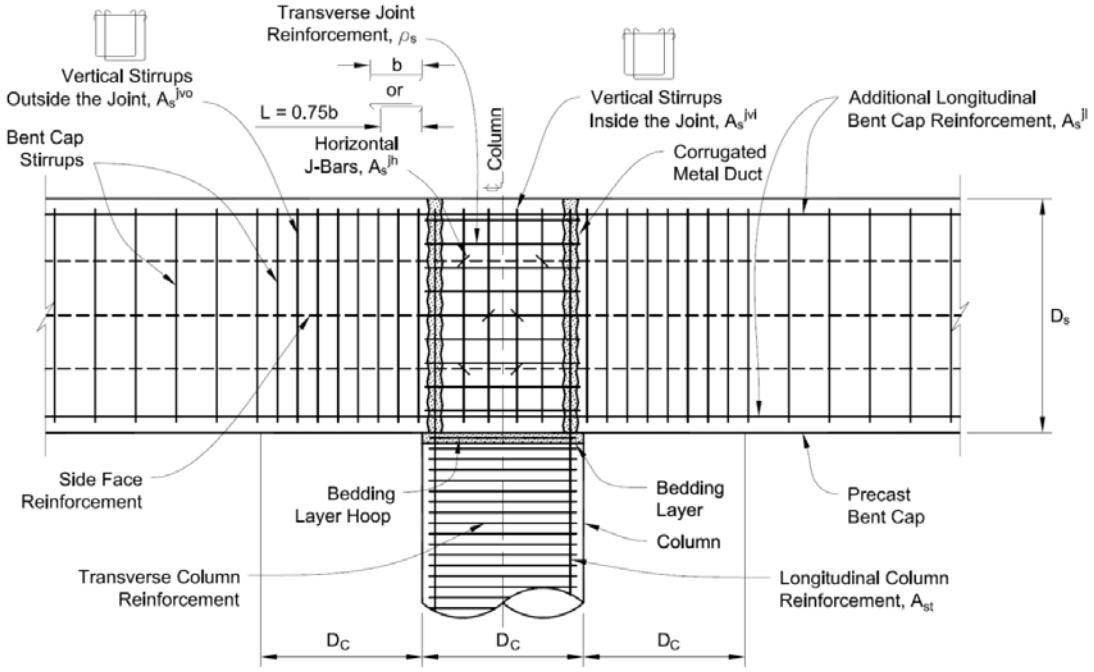

Grouted Duct Full Ductility Joint Shear Reinforcement Details SDC C and D (Elevation)
Figure 14.3.1.7.4-2

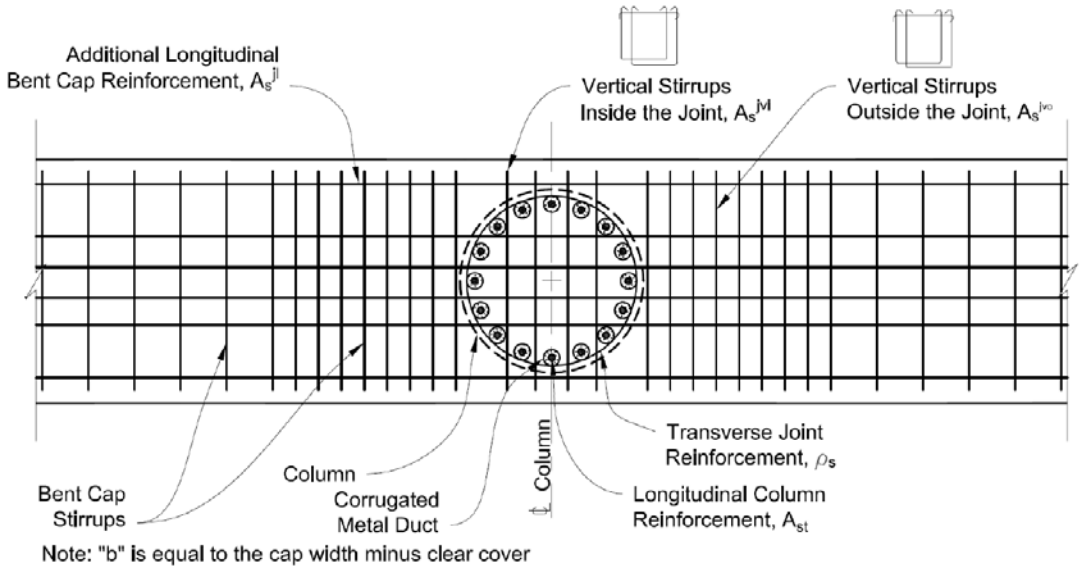

Grouted Duct Full Ductility Joint Shear Reinforcement Details SDC C and D (Plan)
Figure 14.3.1.7.4-3

C. Crossbeam Pocket Connection

Crossbeam pocket connections shall use a helical, lock seam, corrugated steel pipe to form the crossbeam pocket. The thickness of the corrugated pipe shall be sized to satisfy transverse reinforcement ratio requirements specified in AASHTO Seismic 8.13.3.1.

A supplementary hoop shall be placed one inch from each end of the corrugated pipe. The supplemental hoop shall match the size and type of transverse reinforcement required for the column plastic hinging region.

A minimum thickness of helical, lock-seam, corrugated steel pipe shall be used to satisfy the transverse reinforcement ratio requirements specified in AASHTO Seismic 8.13.3.1 and Equation 14.3.1.5.2-2. The thickness of the corrugated steel pipe is intended to provide an average confining hoop force to the joint approximately the same as that provided by hoops required for cast-in-place construction. The minimum thickness of the steel pipe, of 0.0598 in. corresponds to 16 gage steel pipe, which was used in the supporting precast crossbeam research and is the thinnest gage steel corrugated pipe that is typically available.

Non-integral crossbeam systems addressed in this Section use connections between the crossbeam and column that are classified as either cast-in-place or emulative precast. Emulative precast crossbeam-to-column connections are designed and detailed to emulate joint performance and system ductility achieved by monolithic, cast-in-place construction. Emulative systems use cast-in-place concrete or grout to join the precast crossbeam to the column. Associated construction specifications are detailed in AASHTO LRFD *Bridge Construction Specifications* Section 8.13.8 (2010).

Cast-in-place and emulative precast crossbeam-to column joints are designed to accommodate the forces associated with the column's overstrength plastic hinging moment capacity in an essentially elastic manner.

Vertical stirrup requirements are more conservative for non-integral crossbeam systems than for integral crossbeam systems. For example, stirrups outside the joint region that are required for the force transfer mechanism may not simultaneously be used to resist other design requirements such as crossbeam shear due to dead, live, and earthquake loads.

D. Joint Shear Reinforcement

Where the principal tension stress in the joint, p_t, is greater than or equal to 0.11 f'_c, crossbeam pocket connections shall be detailed to include additional joint shear reinforcement as specified in AASHTO Seismic 8.13.4 and 8.13.5.

Vertical stirrups inside the joint shall consist of double leg stirrups or ties of a bar size no smaller than that of the crossbeam transverse reinforcement. A minimum of two stirrups or equivalent ties shall be used.

The crossbeam pocket connection uses a single, helical, corrugated steel pipe embedded in the crossbeam to form the crossbeam pocket, which anchors column longitudinal bars.

This pipe, placed between crossbeam longitudinal reinforcement, serves both as a stay-in-place form and as well as joint transverse reinforcement, the hoops. The duct diameter is sized to provide adequate tolerance for crossbeam placement over column longitudinal bars, and the duct thickness is sized to satisfy transverse joint reinforcement requirements.

A supplementary hoop is required at each end of the duct to limit dilation and potential unraveling. Crossbeam pocket connection research demonstrated the effectiveness of this reinforcement.

Joint shear reinforcement requirements outside the joint match those for cast-in-place connections. However, based on research results, only limited vertical stirrups are needed within the joint to achieve suitable joint performance, and horizontal J-bars are not required. For constructability reasons, double-leg vertical stirrups or ties are specified. Placement of overlapping stirrups in the joint is likely not practical due to increased congestion in the joint and resulting decrease in construction tolerance for crossbeam erection.

As shown in Figures 14.3.1.7.4-4 through 14.3.1.7.4-6, inverted U-bars, or hairpins, may be optionally placed within the pocket to help restrain potential buckling of top crossbeam flexural bars within the joint.

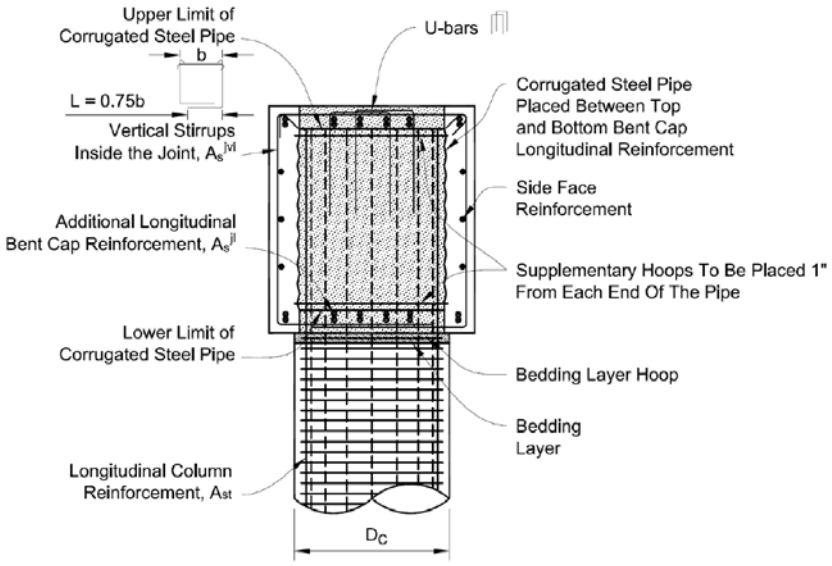

Crossbeam Pocket Full Ductility Joint Shear Reinforcement Details SDC C and D (Section)
Figure 14.3.1.7.4-4

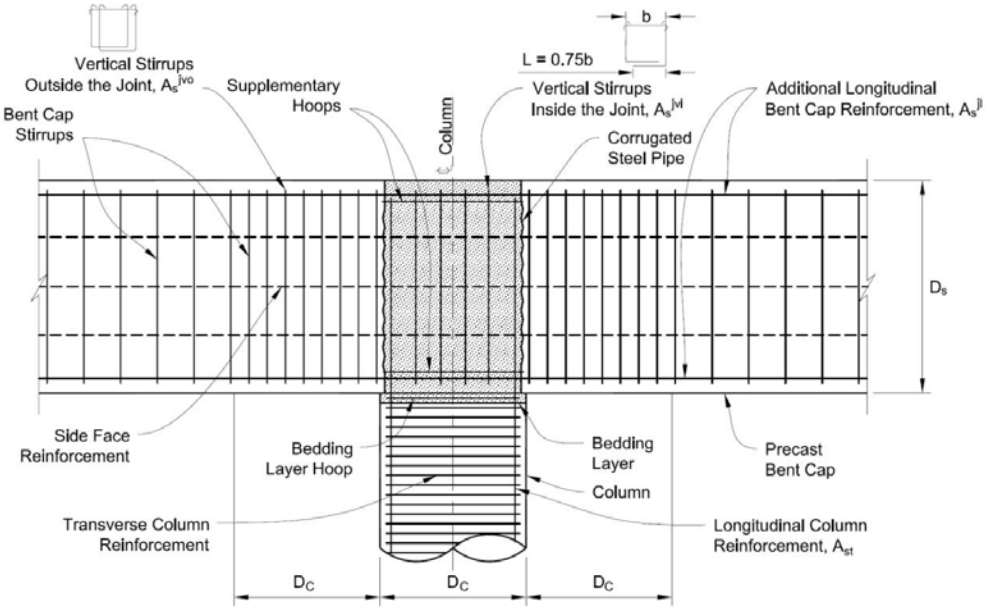

Crossbeam Pocket Full Ductility Joint Shear Reinforcement Details SDC C and D (Elevation)
Figure 14.3.1.7.4-5

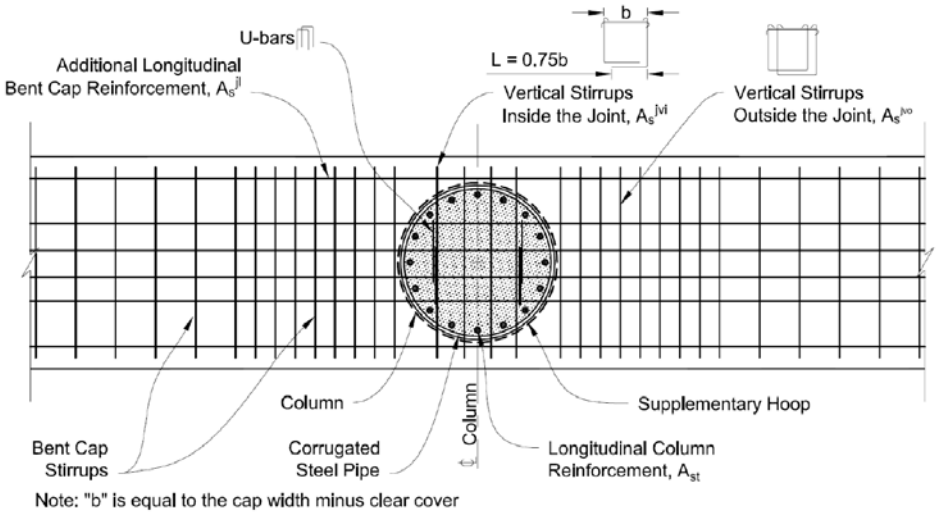

Crossbeam Pocket Full Ductility Joint Shear Reinforcement Details SDC C and D (Plan)
Figure 14.3.1.7.4-6

14.3.1.7.5 Socket-Type Footing Connections

Where socket-type connections are used to connect precast columns to CIP spread footings or pile caps, the following requirements shall be followed.

The interface of the precast column with the footing shall be intentionally roughened to an amplitude of 0.70 in. The column-to-footing shear interface shall be designed for interface shear using Section 5.7.4 of AASHTO LRFD. To account for potential shrinkage cracking around the column, the cohesion factor, c, shall be taken as zero.

The friction factor, f_v, and the factors, K_1 and K_2 may be taken as those for normal weight concrete placed against a clean concrete surface.

The shear friction bars need not cross the interface between the column and footing. Instead the bars that would normally pass across this interface shall be placed at the same level in the footing adjacent to the column. Because typical footings have an orthogonal layout of reinforcement, bars at 45-degrees to the footing reinforcement are also required.

These additional bars should be of the same size as the main footing reinforcement and be fully developed at the projection of the perpendicular column face. It is recommended that four bars be placed at each of four locations around the column. Such additional bars shall be placed near the top and bottom reinforcement of the footing.

With a socket-type connection it is not practical to turn the column bars out with 90-degree hooks. Therefore, column bars shall be terminated with mechanical anchorages capable of developing the column bar specified ultimate tensile strength, Class HA per ASTM A970. These anchorages shall be placed below the bottom mat of footing reinforcement in order to develop a complete joint force transfer mechanism. The placement of the anchorages will require additional space beneath the bottom mat of reinforcement.

The soil directly beneath the column must support the column and associated construction loads before the footing concrete gains sufficient strength.

If necessary, a small slab beneath the column may be necessary to provide appropriate column support during construction.

The placement of the footing bars is shown in Figures 14.3.1.7.5-1 and 14.3.1.7.5-2.

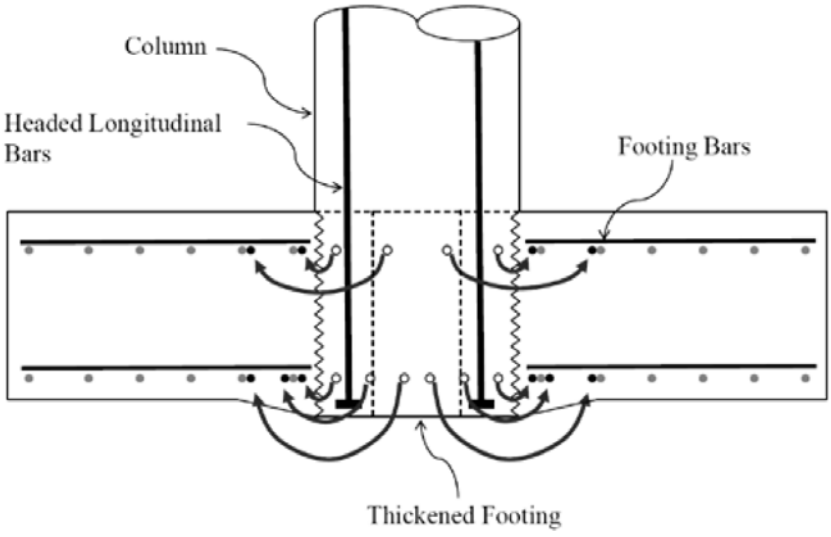

Placement of footing bars with a socket-type connection
Figure 14.3.1.7.5-1

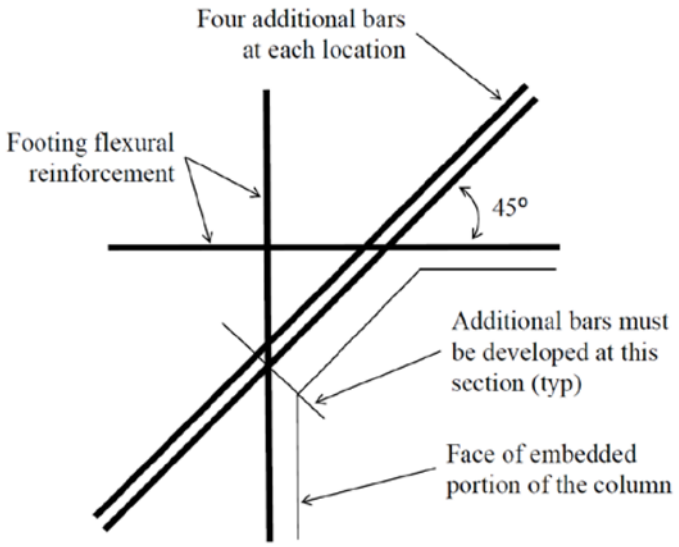

Placement of additional bars at 45° to main footing reinforcement
Figure 14.3.1.7.5-2

14.3.1.7.6 Precast Column

Precast columns and crossbeams that are used with the HfL bent system are covered by AASHTO Seismic 8. The columns of such systems are not considered precast concrete piles.

A. Interface Shear Transfer Capacity of Precast Bent Systems

The interface shear capacity between precast column and crossbeam or between segments of precast columns shall be determined using Section 5.7.4 of AASHTO LRFD. To account for cyclic loading effects and the potential for significant cracking, the cohesion factor, c, shall be taken as zero and the friction factor, μ, shall be 0.60. The factors, K_1 and K_2 shall be 0.2 and 0.8 ksi, respectively.

B. Splicing of Longitudinal Reinforcement in Columns Subject to Ductility Demands for SDCs C and D

Where tensile force is transferred between reinforcing anchored into steel ducts using high strength grout and bars adjacent to the duct, the splice length, l_{splice}, shall be the longer of the anchorage length of the bar inside the duct, as given by Section 14.3.1.7.6C or the splice length of the bars on the outside of the duct as determined by Article 5.10.8.4 of AASHTO LRFD.

To the extent practical, the bars spliced to the duct should be arranged to minimize eccentricity and should be in contact with the duct. If bars are placed away from the duct, the non-contact distance must be added to the splice length.

Transverse steel shall enclose both the duct and the bars outside the duct as shown in Figure 14.3.1.7.6-1.

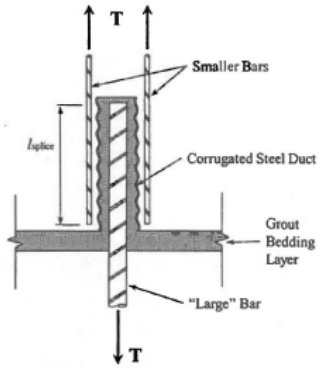

Splicing of Grouted Duct Bars to Other Bars
Figure 14.3.1.7.6-1

C. Minimum Development Length of Reinforcing Steel for SDCs C and D

The anchorage length for column bars developed into steel ducts shall satisfy:

$$l_{ac} = \frac{0.67 d_{ht} f_{ye}}{\sqrt{f'_g}} \qquad \text{Equation 14.3.1.7.6-1}$$

Where:

d_{ht} = diameter of longitudinal column bar (in)
f_{ye} = expected yield stress of the longitudinal reinforcement (ksi)
f'_g = nominal compressive strength of the grout (ksi)

When bars are anchored into steel ducts, the force that is transferred to the duct must then be transferred to adjacent reinforcement. In addition to the development length provided in Equation 14.3.1.7.6-1, the length of the embedment must consider the splice length required and configuration, for example the non-contact distance, of the bars outside of the duct, to which the tensile force is transferred.

The ducts used shall be steel and be of semi-rigid corrugated construction. Axial force shall not be transferred beyond the end of the bar anchored within the duct without testing to demonstrate that the duct has the capacity to withstand the expected tensile force.

In the case of dropped crossbeams, where ducts anchor column reinforcement in the first or lower stage crossbeam, but the superstructure is integral with the upper diaphragm, all column bars must extend into the upper diaphragm. These bars should extend as far as practical to the top of the upper crossbeam.

In the event that a limited number of column bars need to be terminated in the lower crossbeam, a rational analysis, such as strut-and-tie analysis, shall be conducted to account for the actual distribution of forces transferred from the column bars to the crossbeam.

The length of the duct used to anchor grouted bars may be controlled by either the bar grouted into the duct, as provided by Equation 14.3.1.7.6-1, or the normal splice length of the bars on the outside of the duct.

Additionally, if such bars are not adjacent to the duct, then the non-contact distance should be added to the splice length.

Testing by Eberhard et.al. (2009) showed that large reinforcing bars can be developed in shorter lengths than normal, if the bars are grouted into steel ducts. The bars can develop their ultimate strength if grouted at least 16 bar diameters into the ducts. This length allows for cyclic degradation and is based on developing at least 95 ksi bar stress with grout strengths of 8 ksi. Equation 14.3.1.7.6-1 provides adjustment for grout strength and assumes the ultimate strength of the bar is 1.4 times the expected yield strength.

For smaller applications, corrugated post-tensioning duct is adequate. For anchorage of larger bars, corrugated steel pipe conforming to ASTM A760 may be used. Such pipe should be galvanized.

The ducts are intended to provide local confinement, crack arresting, and provide a roughened surface to facilitate shear transfer from the bar anchored inside to the adjacent concrete. The ducts are not intended to resist tensile forces.

Because the joint shear force transfer between the vertical system and superstructure takes place in the upper crossbeam, the column bars must be extended into the upper crossbeam. The effect of the lower crossbeam is to distribute forces along the crossbeam and thereby enlarge the effective joint shear region.

D. Lateral Reinforcement Inside the Plastic Hinge Region for SDCs C and D

Where precast columns connected with grouted bedding layers are used, lateral reinforcement may be required within the bedding layer. The maximum spacing of lateral reinforcement applies inclusive of the bedding layer. Lateral reinforcement included in the bedding layer shall be of the same size as that in the column itself. If stronger materials are used for reinforcement of the bedding layer, the assumed material strength for design shall be the same as that used for the column.

If cross slope results in a varying thickness of the grout bedding layer, the largest thickness shall be used to configure the lateral reinforcement.

E. Development Length for Column Bars Extended into Oversized Drilled Shafts for SDCs C and D

Where socket connections are used, column bars may be terminated with straight bar embedment or mechanical anchorages capable of developing the column bar specified ultimate tensile strength per Class HA per ASTM A970.

All column bars may be terminated at the same location, provided the confinement steel required in Section 14.3.1.7.7A is included.

The bars shall be extended into the transition or splice zone of the pile shaft. The embedment depth shall meet the requirements of Section 7.4.4C. The embedment depth shall also include the total bar end cover distance of both column and shaft bars.

14.3.1.7.7 Drilled Shaft

Where socket-type connections are used to connect precast columns to drilled shafts the column-to-shaft side interface shall be intentionally roughened to an amplitude of 0.70 in.

Because axial loads can be supported by end bearing of the column on the shaft, a shear friction interface design is not required. However, consideration shall be given to temporary support of the precast column and to proper consolidation of concrete between the column base and shaft to ensure that an adequate load path is provided.

A. Lateral Confinement for Oversized Drilled Shafts for SDCs C and D

Where socket connections of precast columns are used to connect columns with drilled shafts, adequate confinement reinforcement must be included to react the internal tension forces that develop. Lateral confinement reinforcement along the column embedment length shall satisfy Section 7.8.2.K.

The confinement reinforcement requirements over the top portions of oversized pile shafts that connect with precast columns are included to provide tie reinforcement to resist prying forces introduced near the top of the shaft by the precast column.

Experimental testing by Hung, et. al. 2013 has shown that adequate strength may be achieved in such connections, provided the lateral confinement reinforcement as defined by Equation 7.8.2-1 is included. The additional confinement reinforcement required over the upper half of the embedment length is intended to limit potential shaft damage, which tends to occur at the top of the shaft if adequate confinement is not provided.

14.3.1.7.8 Superstructure Capacity Design for Integral Crossbeams for Longitudinal Direction for SDCs C and D

The effective width of open-soffit superstructure resisting longitudinal seismic moments, B_{eff}, may be determined by Equation 14.3.1.7.8-1 for open soffit, girder deck superstructures supported on dropped crossbeam integral bents.

$$B_{eff} = D_C + 2D_{S1} + D_{S2} \qquad \text{Equation 14.3.1.7.8-1}$$

Where:

D_C = diameter of the column (in.)
D_{S1} = depth of dropped portion of crossbeam (in.)
D_{S2} = depth of superstructure (in.)

Where the superstructure frames into the integral crossbeam, adequate reinforcement from the superstructure must extend into the crossbeam in order to transmit the capacity protection forces that are expected. This implies that both top and bottom reinforcement must extend into the crossbeam or diaphragm. This reinforcement must lap with similar reinforcement from the opposite side of the diaphragm such that a complete load path for equilibrium of moments is provided.

For the case of a dropped crossbeam that is integral with an upper diaphragm located within the depth of the superstructure, additional lateral distribution of longitudinal moment will occur by virtue of the additional crossbeam depth, and increased torsional capacity of the combined upper diaphragm and lower crossbeam. The two stages of crossbeam construction must be integral over the full width of the crossbeam and closed torsional stirrups and longitudinal steel must be present in the crossbeam to distribute the induced torsional forces.

14.3.1.7.9 Integral Crossbeam

A. Joint Proportioning

Where integral dropped crossbeam construction is used, calculation of the average horizontal, vertical and joint shear stresses for longitudinal loading shall use the following approach:

In the transverse direction, D_s shall be taken as the full depth of the combined lower and upper stages of the crossbeam.

In the longitudinal direction, the following equations shall be used, in lieu of AASHTO Seismic Equations. 8.13.2-5 through 8.13.2-7.

For an integral dropped crossbeam, the average horizontal stress, f_h, shall be taken as:

$$f_h = \frac{P_b}{D_{S2}(D_C + 2D_{S1} + D_{S2})}$$ Equation 14.3.1.7.9-1

Where:

D_C = diameter of the column (in.)
D_{S1} = depth of dropped portion of crossbeam (in.)
D_{S2} = depth of superstructure (in.)
P_b = superstructure axial force at the center of the joint including effects of prestressing (kip)

For an integral dropped crossbeam, the average vertical stress, f_V, shall be taken as:

$$f_V = \frac{P_C}{B_{cap}(D_C + 2D_{S1} + D_{S2})}$$ Equation 14.3.1.7.9-2

Where:

P_C = column axial force (kips)
B_{cap} = crossbeam width (in)

B. Dropped Crossbeam

For an integral dropped crossbeam, the average joint shear stress, v_{jv}, shall be taken as:

$$v_{jv} = \frac{T_c}{l_{ac}(D_c + 2D_{S1} + D_{S2})}$$ Equation 14.3.1.7.9-3

Where:

T_C = column tensile force associated with column overstrength plastic hinging moment, M_{po} (kips)
l_{ac} = length of column and additional effective crossbeam reinforcement embedded into upper stage, D_{S2}, of crossbeam (in)

Where integral dropped crossbeam construction is used, calculation of the average horizontal, vertical and joint shear stresses must take into consideration the actual configuration of the joint region, including the force transfer load path between the superstructure and substructure. These load paths may be different in the two principal directions of the bent.

In the transverse direction, the full depth of the combined dropped crossbeam and upper diaphragm is used, because the full depth participates in the joint force transfer.

In the longitudinal direction, force transfer only occurs in the upper crossbeam or diaphragm where the superstructure frames into the crossbeam. This effectively reduces the depth of the joint region in the longitudinal direction, although this is partially offset by the increase in the effective width parallel to the crossbeam. This increase arises due to the ability of the lower crossbeam to distribute forces along its length before introducing forces into the actual joint region. The increase in effective width is based on a spreading at a 45-degree angle starting at the face of the column. Spreading is stopped at the center of the superstructure, which has a depth of D_{S2}. The effective width is shown in Figure 14.3.1.7.9-1.

Effective Width for an Integral Dropped Crossbeam Connection Considering Force Transfer in the Longitudinal Direction of the Bridge.

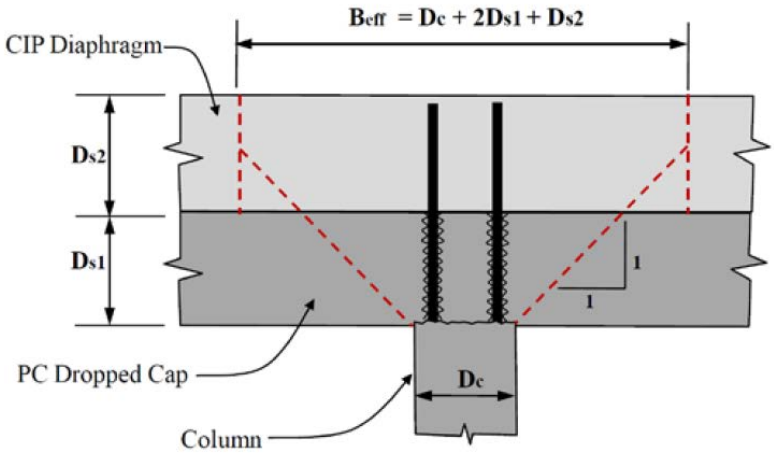

Figure 14.3.1.7.9-1

The effective reinforcement in the upper crossbeam joint region is that column reinforcement that extends into the upper diaphragm and the crossbeam stirrups and other bars that extend from the lower crossbeam into the upper diaphragm over the effective width of the longitudinal joint shear region, $D_C+2D_{S1}+D_{S2}$.

The column tensile force is calculated using AASHTO Seismic Equation 8.13.2-8.

C. Minimum Joint Shear Reinforcing

When grouted ducts are used, transverse reinforcement shall be included around the ducts that anchor column reinforcement. The transverse reinforcement in the joint shall satisfy AASHTO Seismic Equations 8.13.3-1 and 8.13.3-2 and applicable requirements of AASHTO Seismic 8.13.4 and 8.13.5.

D. T Joints

The provisions in this article apply to integral dropped crossbeam construction. The required vertical stirrups, A_{jv}, shall extend of the full depth of the crossbeam.

E. Knee Joints

The provisions in this article apply to integral dropped crossbeam construction. The required vertical stirrups, A_{jv}, shall extend of the full depth of the crossbeam. The full depth of the integral crossbeam, $D_{S1}+D_{S2}$, shall be considered when laying out the required additional reinforcement.

F. Horizontally Isolated Flares

Where precast column segments are larger than the interface and bedding layer connecting to the crossbeam, the requirements for horizontally isolated flares shall apply.

The design of such systems should include both the geometry of the bedding layer and any length of column that is similarly reduced in cross section. The combined length of these defines the gap thickness.

14.3.2 Geosynthetic Reinforced Soil Integrated Bridge System

The GRS-IBS method has been used for supporting bridge abutments increasingly around the country with success. The FHWA has developed a manual for this type of bridge abutment, provided on the following FHWA website: www.fhwa.dot.gov/everydaycounts/technology/grs_ibs

Proprietary SE walls supporting abutments shall not be considered preapproved, and shall not be used beyond the limits described herein unless approved by the WSDOT State Geotechnical Engineer and the WSDOT Bridge Design Engineer.

See Section 7.5.11 for design requirements of abutments supported on reinforced soil walls.

14.3.3 Precast Decks

Full-depth precast bridge deck systems consist of the precast panels, grout between the supporting girder and the precast panel, temporary support and forms along the girder to retain the grout, pockets or block-outs to accommodate the shear connections to the girder, transverse joints between the precast panels and some type of overlay to provide for rideability. Longitudinal post-tensioning may also be included in the system.

A full-depth precast deck consists of a series of precast concrete panels that are full depth in thickness with the length and width determined by specific bridge geometry. The length along the roadway is approximately 8 to 12 feet and a width equal to the full bridge width or half bridge width for wide bridges (greater than 50 feet). Panels span between the supporting girders and are designed as reinforced or prestressed concrete using pretensioning or post-tensioning. The general preference of contractors is to use prestressed concrete to eliminate possible cracking from handling and shipping. See Figures 14.3.3-1 and 14.3.3-2 for typical layout of a precast deck.

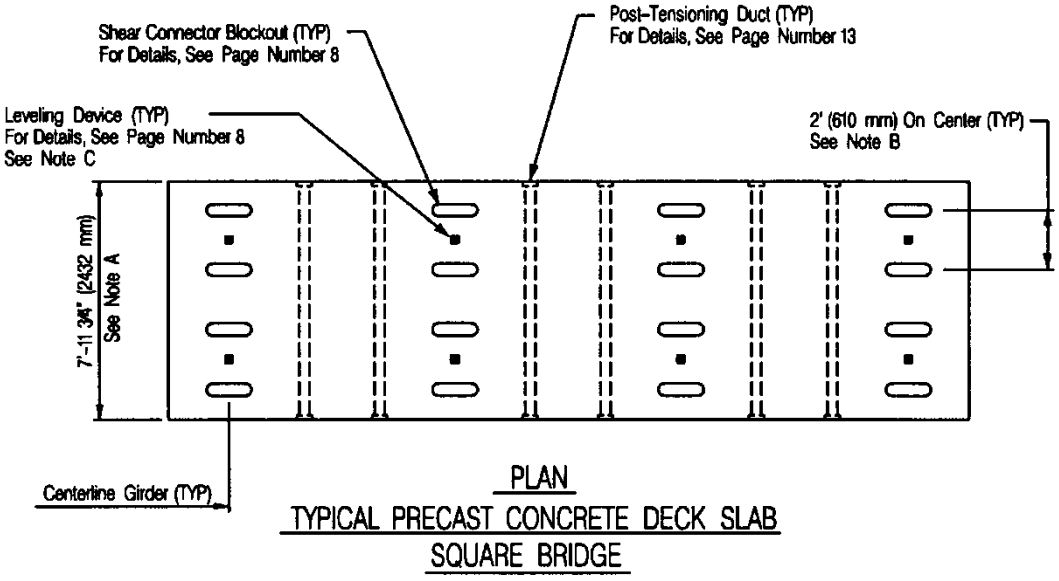

Typical Plans for Square Panel
Figure 14.3.3-1

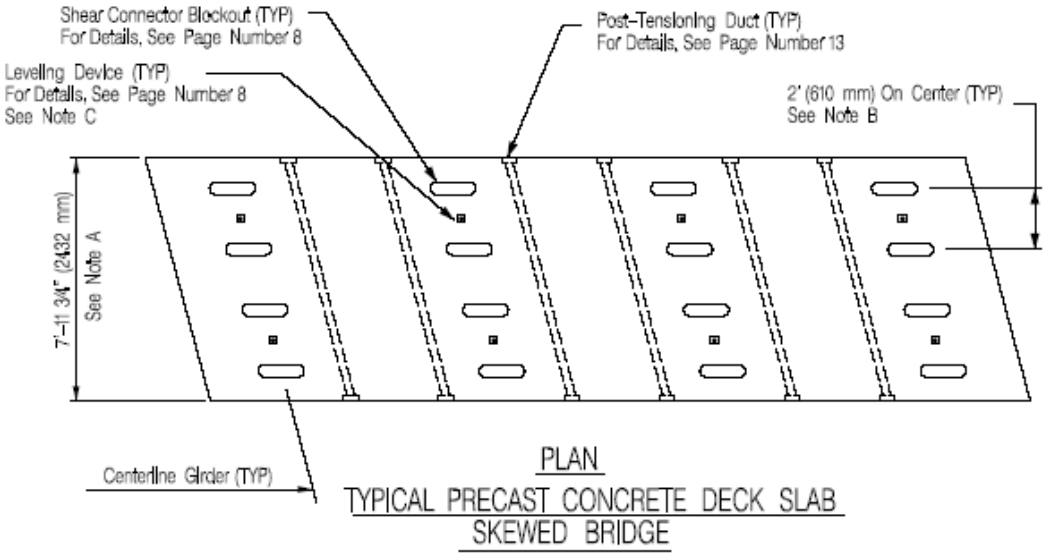

Typical Plans for Skewed Panel
Figure 14.3.3-2

The panels can be designed for composite or non-composite action with the supporting girders. A non-composite design is much simpler and easier to fabricate because of the elimination of the shear connections which complicate forming the panel and require special placement of shear reinforcement or studs and restricts post-tensioning operations.

The benefits of precast full depth deck systems include improved quality, reduced construction time or impact on traveling public, possible weight reduction and reduction of total project cost.

Because the precast deck system is produced in a plant environment, the quality is superior to field cast concrete bridge decks. The variability of construction due to environmental conditions can be easily accommodated in a plant with consistency to minimize negative impact on the casting operations and deck quality. The size of casting units is smaller thereby reducing the mix, placing and finishing variability that exists in the field. Also, because the units are small, curing can be easily controlled and applied as soon as possible to achieve the best material performance characteristics. High performance concrete (HPC) is recommended for all bridge decks and requires quality construction practices to achieve the best performance characteristics. Plant casting provides greater assurance that the performance characteristics of HPC will be achieved. This issue becomes more critical as available field labor decreases or labor turnover for contractors continues.

Many projects constructed using full-depth precast deck panels have demonstrated a significant reduction in construction time, impact on the traveling public or impact on peak traffic flow. The construction time reduction has been documented to be from 50 to 75 percent of the time required for cast-in-place bridge deck construction. The demonstrated construction time savings meets the public's demand for faster construction and less impact to traffic. The reduced construction time also reduces the safety hazards to motorists and workers by reducing the total time they are exposed to the work zone.

Successful projects using full-depth precast deck systems have also shown flexibility for accommodating the peak traffic flows for projects in high traffic urban locations. The projects demonstrate the ability to replace decks during non-peak traffic and have the full roadway open for peak traffic. This can be accomplished with night only work, weekend only work, or other non-peak traffic period work.

A great advantage provided by precast full-depth bridge deck panels is that the panel construction is removed from the critical path and can be fabricated prior to need at the project site for installation. For bridge construction, this will generally remove a considerable amount of work from the critical path and permit construction to be completed earlier. Also, precast components can significantly remove the amount of work required to be competed at the job site and reduces the risk to traffic and worker safety. This provides greater flexibility in establishing the project schedule and allows concentration by the contractor on the critical path items.

Another advantage provided by full-depth precast bridge deck panels is the ability to reduce the dead load with the use of lightweight concrete. Although, the same weight reduction can be achieved for cast-in-place decks through use of lightweight concrete, the precast plant environment makes the use of lightweight concrete more desirable. The complexities of mixing, placing, finishing and curing lightweight concrete are simplified and easier to accommodate in a plant environment. The majority of precast plants provide central mix operation, shorter haul times, shorter placement times, quicker finishing times and quicker application of curing. All of these items have an impact on the successful use of lightweight concrete and the probability of success is significantly greater in the plant environment.

14.4 Innovative Bridge Construction

Innovative Bridge Construction is simply an idea that encourages outside the box thinking encouraging engineers to consider principles that will enhance bridge performance, speed up construction, or add any other benefit to the industry. There is no single or handful of ideas that can contain or describe Innovative Bridge Construction. It's simply a mentality that new ideas ought to be explored. Innovation might be defined as any contribution to the bridge industry that takes bridge construction past the current standard practice of bridge construction. Some items produced recently are described in the following sections.

14.4.1 Self-Centering Columns

Self-centering columns are columns designed restore much of their original shape after a seismic event. They're intended to improve the serviceability of a bridge after an earthquake.

Self-centering columns are constructed with a precast concrete column segment with a duct running through it longitudinally. They rest on footings with post-tensioning (PT) strand developed into them. Once the precast column piece is set on the footing, the PT strand threads through the duct and gets anchored into the crossbeam above the column. The PT strand is unbonded to the column segment. As a column experiences a lateral load, the PT strand elastically stretches to absorb the seismic energy and returns to its original tension load after the seismic event. The expectation is the column would rotate as a rigid body and the PT strand would almost spring the column back to its original orientation.

A depiction of the self-centering concept is shown in Figure 14.4.1-1.

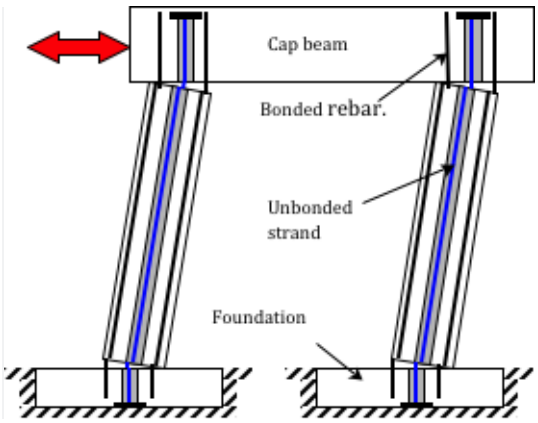

Self-Centering Column Concept
Figure 14.4.1-1

14.4.2 Shape Memory Alloy

Like self-centering columns, Shape Memory Alloy (SMA) and Engineered Cementitious Composite (ECC) products are introduced into bridge design as a means to improve ductility, seismic resilience, and serviceability of a bridge after an earthquake.

SMA is a class of alloys that are manufactured from either a combination of nickel and titanium or copper, magnesium and aluminum. The alloy is shaped into round bars in sizes similar to conventional steel reinforcement. When stressed, the SMA can undergo large deformations and return to original shape. This deformation can be recovered by either the application of heat (Shape Memory Effect) or removal of stress (Superelastic or Pseudoelastic effect) (Langoudas 2008 and Hodgson 1990). Figure 14.4.2-1 shows the stress-strain profile for loading and unloading of SMA. The SR 99 Alaskan Way Viaduct Replacement – South Access project demonstrated that yield strengths of 55 ksi can be achieved with an initial modulus of elasticity of approximately 5400 ksi. Under service and strength limit states the SMA in the column is designed similarly to traditional mild reinforcement, the stress in the bar is limited to the yield strength. During a seismic event, when the yield stress is exceeded, the bars deform trilinearly and restore to the undeformed state as the stress dissipates.

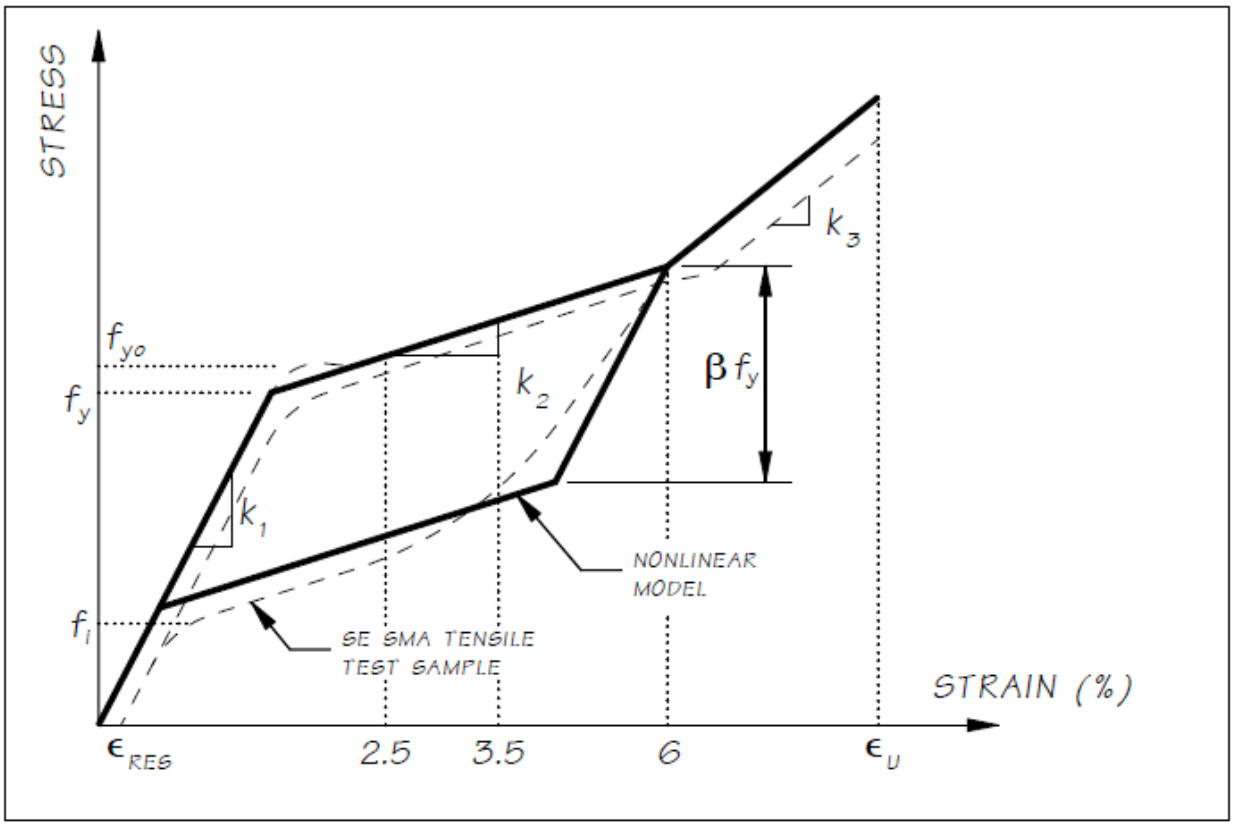

Shape Memory Alloy Stress-Strain Model
Figure 14.4.2-1

ECC is in the family of High Performance Fiber Reinforced Cementitious Composites and is similar to traditional concrete mixes, except that the mix includes a polyvinyl alcohol fiber and omits the course aggregate. ECC replaces conventional concrete in columns to provide a moderate tensile strength and increase ductility to accommodate the large deformations of the SMA. The use of ECC eliminates the spalling expected of conventional concretes in the hinge region. Figure 14.4.2-2 shows the stress-strain profile comparison of confined and unconfined ECC ($f`_c$ = 5 ksi) and conventional concrete ($f`_c$ = 4 ksi)(Li 2007 and Xu 2010).

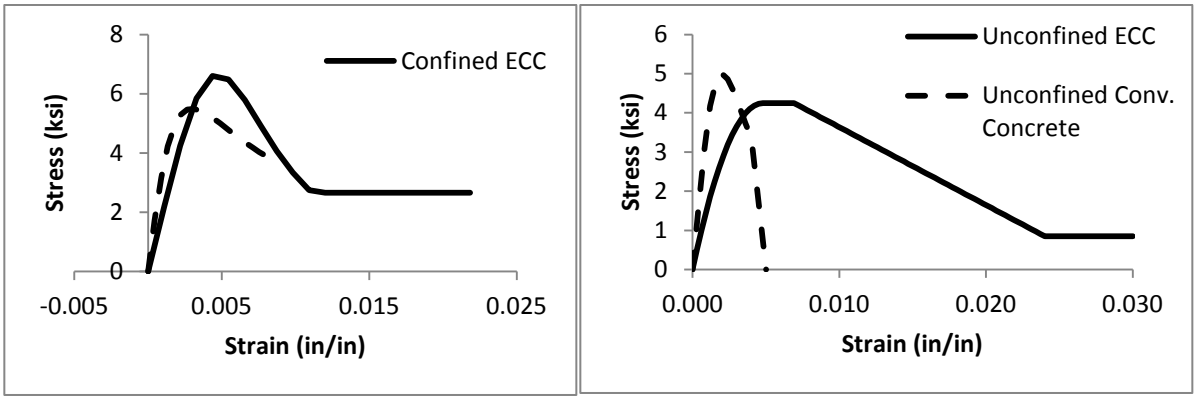

Engineered Cementitious Concrete Stress-Strain Model
Figure 14.4.2-2

When combined in the plastic hinge zones of bridge columns, the SMA and ECC materials are designed to provide high levels of strain with a super-elastic performance to allow for large deflections with negligible permanent deformation and minimal damage. This combination of materials provides the ductility a bridge column needs to perform well in a seismic event while providing enough elasticity to restore the bridge closer to its original shape than conventional concrete and rebar, even with proper detailing (Cruz 2012).

Bars fabricated with SMA are coupled with conventional steel reinforcing located outside the plastic hinge region to reduce the amount of SMA used in the bridge column. The engineered cementitious material can be poured within the plastic hinge region separately from the rest of the column concrete.

An example of a column with ECC and SMA reinforcing in the plastic hinge regions is shown in Figure 14.4.2-3.

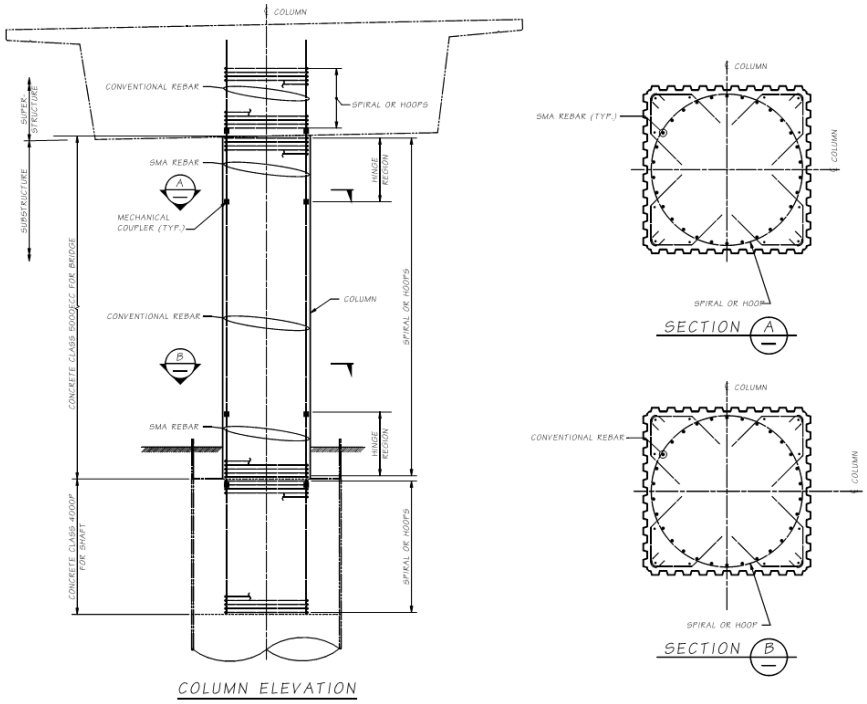

Shape Memory Alloy and Engineered Cementitious Column (Elevation and Sections)
Figure 14.4.2-3

14.5 Shipping, Handling and Erection

14.5.1 Lifting Devices

Lifting locations for precast elements shall be shown in the design plans. The engineer is responsible for checking the handling stresses in the element for the lifting locations shown on the plans. Elements shall be designed using the following general criteria:

For stripping from the form, use two point picks for columns and pier crossbeams, similar to prestressed beams. Columns will require additional pick points for tripping into the vertical orientation during erection. Wall panels generally require four or more pick points when lifting horizontal and additional pick points for tipping into the vertical orientation during erection.

- Use an allowable stress of $0.16\sqrt{f'_c}$ on the static tensile stress in the concrete during handling. This is typical in the industry and provides a 50 percent buffer against exceeding the modulus of rupture during handling.
- Do not show specific lifting hardware on the drawings. Verify that at least one lifting hardware manufacturer can provide a device that can resist the anticipated loads. Consider reducing the size of the element or switch to a more sophisticated lifting system if no manufacturer can meet the required resistance. Consult with fabricators for these situations.

The contractor may choose alternate lifting locations with approval from the engineer. The contractor will provide the spacing and location of the lifting devices and submit plan and handling stress calculations for approval prior to construction of the element.

Unless buried in a subsequent cast-in-place concrete pour, lifting devices shall be recessed a minimum of 1” below the exposed surface of the precast element. Recesses at the lifting devices shall have a roughened finish. Some recesses are formed and cannot be broomed during finishing. In those cases a surface retarder can be used to provide a roughened surface. After the element is placed in its final position, The lifting device shall be removed to the base of the recess and the recess shall be filled with structural non-shrink grout or other approved patching material. In some cases the recess may be on a vertical surface and non-shrink grout may not be feasible.

14.5.2 Handling, Storage and Shipping

The contractor is responsible for the handling, storage and shipping of precast elements in such a manner that does not cause undue stress on the element. The contractor shall submit a handling, storage and shipping plan to the engineer for review prior to the construction of any element.

The inspectors will inspect all elements and identify any elements with defects. The contractor will submit repair procedures for review by the engineer. Any rejected elements will be replaced at the contractor’s expense. The contractor is responsible for any schedule delays due to rejected elements.

14.5.3 Tolerances

The tolerance of casting elements is critical to a successful installation. One of the most important tolerances is the location of the grouted duct splices. Make the dimension measurements from a common working point or line in order to specify tolerances of critical elements. Templates shall be used where practical. Center to center measurements can lead to a build-up of tolerance errors.

The typical detail drawings shall include details of maximum allowable tolerances. Include these details in all precast substructure projects.

Include a requirement in the project specifications that, unless templates are used to the satisfaction of the engineer. Note that erection tolerances are also extremely important, especially with placement of the crossbeam on multiple columns prior to installation of the elements at the bridge site. This is especially true for grouted splice couplers. Verify the spacing of the couplers as well as their orientation within the element. The splice reinforcement is often left longer than required in the fabrication yard so that the bars can be cut the exact length in the field as the construction progresses. The dry fit can still be done in this case with the longer bars.

14.5.4 Assembly Plans

Most bridge construction projects require contractors to submit erection plans for bridge girders. Prefabricated substructures require an even higher level of pre-construction planning. Project specifications shall include requirements that the contractor submit an assembly plan for the construction of the entire structure including the precast substructure.

Include as a minimum the following in the assembly plan:

- size and weights of all elements
- minimum curing time of elements before shipping to the site
- picking points of all elements
- sequence of erection
- temporary shoring and bracing
- grouting procedures
- location and types of cranes
- a detailed timeline for the construction including time for curing grouts and closure pours

14.5.5 Element Sizes

The size of precast concrete substructure elements can become an issue for elements that need to be shipped long distances. For precast elements requiring shipping, use the following general guidelines for sizing precast concrete substructure elements:

- **Width**

  Keep the width, short dimension, of the element and any projecting reinforcing below 14 feet. This is to keep the widths reasonable for shipping.

- **Height**

  Keep the maximum height of any element including any projecting reinforcing less than 10 feet so the element can be transported below existing bridges.

- **Length**

  Length ought to be considered to ensure the load can be distributed well with conventional shipping equipment.

- **Weight**

  Keep the maximum weight of each element to less than 100,000 pounds in order to keep the size of site cranes reasonable.

The above limits can be increased for some projects, particularly where precast elements are not required to be shipped to the site. The designer can work with both the fabricator and contractor to size the elements based on the available equipment and the proposed shipping routes.

For large pieces, weight can be managed to make the precast pieces more workable. Weight can be minimized with lightweight concrete, voids, or smaller pieces with more joints.

14.6 Installation Method Options

Installation methods should be determined by the contractor. Designers shall include a suggested construction sequence as part of their contract plans. Considering means of installation is important for any engineering task one pursues. But it is especially important for ABC since so much of the cost will be driven by the constructability of the project. Furthermore, with a lot of contractors being unfamiliar with ABC, it may be easy for a designer to create an unconstructible project if they're not careful.

It may be appropriate to include contract drawings that suggest construction methods and installation details to aid the contractor in finding a constructible solution. By stating on the plans "suggested" in a detail title, the contractor is not obligated to follow the suggested detail.

Some installation methods are discussed below. There are other installation methods that may be applicable for a specific project. Methods not discussed below include pivoting a structure, use of gantry cranes, and structure launching.

14.6.1 Crane Sizing

As stated above, determining installation methods is not the duty of the designer. However the designer should ensure that the weights of the items to be installed can be done with reasonably sized cranes, with a boom angle that allows for the precast objects to be moved around the crane, without hitting the crane. Generally the smaller capacity of crane that can be used, the lower the construction costs. The designer ought to consult with those associated with the construction industry, either through WSDOT's Construction Office, the Association of General Contractors, or other groups that meet in a public forum.

14.6.2 Lateral Sliding

Bridge placement using lateral sliding is another type of ABC where the entire superstructure is constructed in a temporary location and is moved into place over a night or weekend. This method is typically used for bridge replacement of a primary roadway where the new superstructure is constructed on temporary supports adjacent and parallel to the bridge being replaced. Once the superstructure is fully constructed, the existing bridge structure is demolished, and the new bridge is moved transversely into place. In some instances, a more complicated method known as a bridge launch has been used, which involves longitudinally moving a bridge into place.

Lateral sliding can be used for switching out a new and old superstructure. It may also be used for moving an existing bridge to a new alignment, in effort to make room to build a new bridge at the original alignment.

14.6.3 Self-Propelled Modular Transporters

Self-Propelled Modular Transporters (SPMT) are remote-controlled, self-leveling, multi-axle platform vehicles capable of transporting several thousand tons of weight. SPMTs have the ability to move laterally, rotate 360° with carousel steering, and typically have a jack stroke of 18 to 24 inches. They have traditionally been used to move heavy equipment that is too large for standard trucks to carry.

The benefits of ABC using SPMTs include the following:

- **Minimize traffic disruption**

  Building or replacing a bridge using traditional construction methods can require the bridge to be closed for months to years, with lane restrictions, crossovers, and traffic slowing for the duration of the closure. Using SPMTs, a bridge can be placed in a matter of hours, usually requiring only a single night or weekend of full road closure and traffic divergence.

- **Improve work zone safety**

  The bridge superstructure is constructed in an off-site location called a bridge staging area (BSA). This allows construction of the entire superstructure away from live traffic, which improves the safety of both the construction workers and the traveling public.

- **Improve constructability**

  The BSA typically offers better construction access than traditional construction by keeping workspaces away from live traffic, environmentally sensitive areas, and over existing roadways.

- **Enhance quality**

  Bridge construction takes place off-site at the BSA where conditions can be more easily controlled, resulting in a better product. There is an opportunity to provide optimal concrete cure time in the BSA because the roadway in the temporary location does not have traffic pressures to open early.

- **Lower life-cycle costs**

  Because the quality of the bridge is increased, the overall durability and life of the bridge is also increased. This reduces the life-cycle cost of the structure.

- **Provide opportunities to include other ABC technologies**

  Multiple ABC technologies can be used on the same project, for example, a project could utilize prefabricated bridge elements, and also be moved into place using SPMTs.

- **Reduce environmental impacts**

  SPMT bridge moves have significantly shorter on-site construction durations than traditional construction, which is particularly advantageous for areas that are environmentally sensitive. These areas may restrict on-site construction durations due to noise, light, or night work.

- SPMTs are typically used to replace bridges that carry or span major roadways. Time limitations or impacts to traffic govern the need for a quick replacement. Locating an off-site BSA to build the superstructure is a critical component for using SPMTs. There needs to be a clearly defined travel path between the staging area and the final bridge location that can support the SPMT movements (vertical clearances, horizontal clearances, turning radii, soil conditions, utility conflicts, etc.).
- SPMTs can also be used to place a bridge over a waterway. In this case, the bridge superstructure is constructed offsite, and then SPMTs transport the superstructure from the BSA onto a barge which travels the waterway to the final bridge site. Some of the common criteria that govern the use of SPMTs are the following:
- There is a need to minimize the out-of-service window for roadways on or under the structure
- There is a major railroad track on or under the bridge
- There is a major navigation channel under the bridge
- The bridge is an emergency replacement
- The road on or under the bridge has a high ADT and/or ADTT
- There are no good alternatives for staged construction or detours
- There is a sensitive environmental issue

Refer to the following document for more information about the use of SPMTs: *Manual on the Use of Self-Propelled Modular Transporters to Remove and Replace Bridges*, Publication Number FHWA-HIF-07-022, June 2007.

14.7 Examples of Accelerated and Innovative Bridge Construction

A document with examples of WSDOT projects where ABC has been utilized is on the Bridge and Structures' ABC website. This document includes a brief description of the benefits and reasons for using ABC in the project and the lessons learned. Below is a list of the types of construction and the projects that used each type.

Lateral Sliding

I-5, Skagit River Bridge – Bridge No. 5/712
Mount Vernon and Burlington, Washington

SR 104, Hood Canal Bridge–Bridge Number 104/4 and 104/5 East and West Approaches–Port Gamble, Washington

SR 167, Puyallup River Bridge–Bridge Number 167/20E
Puyallup, Washington

Precast Deck

I-5, 38th Street–Bridge Number 5/430 Tacoma, Washington

SR 104, Hood Canal Bridge–Bridge Number 104/5
East Half Partial Deck Panel–Port Gamble, Washington

Precast Crossbeam

SR 16, Eastbound Nalley Valley–Bridge Number 16/6W-N
Tacoma, Washington

SR 520/SR 202 Interchange–Bridge Number 520/46
Redmond, Washington

I-5, Highways for Life Demonstration Project–Bridge Number 12/118
Grand Mound, Washington

SR 520, Floating Bridge & Landings – Bridge Number 520/7.5
Seattle, Washington

Precast Column

SR 520, 36th Street Bridge–Bridge Number 520/36.5
Redmond, Washington

I-405, NE 8th Street Ramp–Bridge Number 405/43
Bellevue, Washington

SR 16, Cedar Street and Union Avenue Bridges
Bridge Numbers 16/12E, 16/12W, 16/14E, and 16/14W
Tacoma, Washington

Adjacent Deck Bulb Tee Beams

I-5, Skagit River Bridge–Bridge Number 5/712
Mount Vernon and Burlington, Washington

I-90, Easton Avenue Bridge – Bridge Number 90/121
Easton, Washington

Self-Propelled Modular Transporter

SR 104, Hood Canal Bridge–Bridge Number 104/4 and 104/5
East and West Approaches–Port Gamble, Washington

SR 433, Lewis & Clark Bridge – Bridge 433/1
Longview, Washington–Rainier, Oregon

Other Precast Elements

SR 303, Manette Bridge–Bridge Number 303/4A
Bremerton, Washington

14.99 References

Pang, J.B.K, K.P. Steuck, L. Cohagen, J.F. Stanton, and M.O.Eberhard. 2008. Rapidly Constructible Large-Bar Precast Bridge-Bent Seismic Connection, WSDOT Research Report WA-RD 684.2, Washington State Department of Transportation, Olympia, W A.

Eberhard, M.O., J.B.K. Pang, J.F. Stanton, K.P. Steuck. 2008. Anchorage of Large-Diameter Reinforcing Bars Grouted Into Ducts, WSDOT Research Report WA-RD 684.1, Washington State Department of Transportation, Olympia, WA.

Haraldsson, O., T. Janes, M. Eberhard, and J. Stanton. 2013. Precast Bent System for High Seismic Regions–Laboratory Tests of Column-to-Footing Socket Connections, FHWA-HIF-13-039, Federal Highway Administration, Washington, DC.

Hung, V., J. Stanton, and M. Eberhard. 2013. Precast Bent System for High Seismic Regions–Laboratory Tests of Column-to-Drilled Shaft Socket Connections, FHWA-HIF-13-038, Federal Highway Administration, Washington, DC.

Gregory A. Banks, Myles Parrish, and Charles W. Spry, Replacing the Boeing North Bridge, PCI Journal | May–June 2015 P 29-38

Christopher M. Vanek, Victor Ryzhikov, and Bijan Khaleghi, Restoring a collapsed span over the Skagit River, January–February 2015 | PCI Journal

State-of-the-Art Report on Seismic Design of Precast Concrete Bridges, PCI SD-01-13, First Edition

Bijan Khaleghi, Eric Schultz. Stephen Seguirant, Lee Marsh, Olafur Haraldsson, Marc Eberhard. and John Stanton, Accelerated bridge construction in Washington State: From research to practice, Fall 2012-PCI Journal, P 34-49

Lagoudas, D.C. 2008, Shape Memory Alloys: Modeling and Engineering Applications. New York, NY: Springer Science and Business Media, LLC.

Hodgson DE, Wu MH, Biermann RJ. 1990, Shape Memory Alloys. ASM Handbook: ASM International. 897-902.

Li, Victor C., 2007, Engineered Cementitious Composites (ECC) – Material, Structural, and Durability Performance. In Nawy, E. (ed), Concrete Construction Engineering Handbook, CRC Press, Boca Raton, Chapter 24.

Xu, Shi-Lang and Xiang-Rong Cai, 2010, Experimental Study and Theoretical Models on Compressive Properties of Ultrahigh Toughness Cementitious Composites. Journal of Materials in Civil Engineering, 22(10), 1067-1077.

Cruz, C., and M. Saiidi, 2012, Shake Table Studies of a 4-Span Bridge Model with Advanced Materials. Journal of Structural Engineering, ASCE, Vol. 138, No. 2, pp. 183-192.

This page intentionally left blank.

Chapter 15 Structural Design Requirements for Design-Build Contracts Contents

15.1 Manual Description 15-1
15.1.1 Purpose 15-1
15.1.2 Specifications 15-1

15.2 Bridge Configuration Criteria 15-2
15.2.1 General 15-2
15.2.2 Railroad Crossings 15-2
15.2.3 Detour Structures 15-3
15.2.4 Inspection and Maintenance Access 15-3
15.2.5 Bridge Types 15-4
15.2.6 Aesthetic Design Elements 15-4
15.2.7 Architectural Design Standards 15-5
15.2.8 Methods 15-5
15.2.9 Design-Builder Urban Design Team 15-5
15.2.10 Analysis and Design Criteria for Structural Widenings and Modifications 15-6
15.2.11 Bridge Security 15-6

15.3 Load Criteria 15-8
15.3.1 Scope 15-8
15.3.2 Load Factors and Load Combinations 15-8
15.3.3 Permanent Loads 15-8
15.3.4 Live Loads 15-9
15.3.5 Noise Barrier Walls 15-10

15.4 Seismic Design and Retrofit 15-11
15.4.1 General 15-11
15.4.2 WSDOT Additions and Modifications to AASHTO Guide Specifications for LRFD Seismic Bridge Design 15-11
15.4.3 Seismic Design Requirements for Bridge Modifications and Widening Projects 15-21
15.4.4 Seismic Retrofitting of Existing Bridges 15-23

15.5 Concrete Structures 15-25
15.5.1 General 15-25
15.5.2 Materials 15-25
15.5.3 Design Considerations 15-27
15.5.4 Superstructures 15-28
15.5.5 Concrete Bridge Decks 15-32

15.6 Steel Structures 15-34
15.6.1 Design Considerations 15-34
15.6.2 Girder Bridges 15-36
15.6.3 Design of I-Girders 15-37
15.6.4 Plan Details 15-42

15.7 Substructure Design 15-45
15.7.1 General Substructure Considerations 15-45
15.7.2 Foundation Modeling for Seismic Loads 15-45
15.7.3 Column Design 15-47
15.7.4 Crossbeam 15-49
15.7.5 Abutment Design and Details 15-49
15.7.6 Abutment Wing Walls and Curtain Walls 15-51
15.7.7 Footing Design 15-51
15.7.8 Shafts 15-52
15.7.9 Piles and Piling 15-54
15.7.10 Concrete-Filled Steel Tubes 15-55

15.8 Walls and Buried Structures 15-56
15.8.1 Retaining Walls 15-56
15.8.2 Noise Barrier Walls 15-59
15.8.3 Buried Structures 15-60

15.9 Bearings and Expansion Joints 15-62
15.9.1 Expansion Joints 15-62
15.9.2 Bearings 15-67

15.10 Signs, Barriers, Bridge Approach Slabs, and Utilities 15-73
15.10.1 Sign and Luminaire Supports 15-73
15.10.2 Bridge Traffic Barriers 15-80
15.10.3 At Grade Concrete Barriers 15-81
15.10.4 Bridge Traffic Barrier Rehabilitation 15-83
15.10.5 Bridge Railing 15-84
15.10.6 Bridge Approach Slabs 15-84
15.10.7 Traffic Barrier on Bridge Approach Slabs 15-86
15.10.8 Utilities Installed with New Construction 15-86
15.10.9 Utility Installation on Existing Bridges 15-89
15.10.10 Resin Bonded Anchors 15-89
15.10.11 Drainage Design 15-90

15.11 Detailing Practices 15-91
15.11.1 Standard Practices 15-91
15.11.2 Bridge Office Standard Drawings and Office Examples 15-95
15.11.3 Plan Sheets 15-95
15.11.5 Structural Steel 15-97
15.11.6 Aluminum Section Designations 15-99
15.11.7 Abbreviations 15-99

15.12 Bridge Load Rating 15-100
15.12.1 General 15-100
15.12.2 Load Rating Software 15-100

15.99 References 15-101

15.1 Manual Description

15.1.1 Purpose

This chapter provides the contractual requirements for structural design of WSDOT projects that supersede AASHTO LRFD *Bridge Design Specifications* (LRFD) and AASHTO *Guide Specifications for LRFD Seismic Bridge Design* (SEISMIC).

15.1.2 Specifications

This manual and the following AASHTO Specifications are the foundation design criteria and design practice documents used to design highway bridges and structures in Washington State:

- AASHTO LRFD
- AASHTO SEISMIC
- WSDOT *Standard Plans* M 21-01 – A-50 Series Standard Plans for Embankment Geometry at Bridge Ends

15.2 Bridge Configuration Criteria

15.2.1 General

A. Bridge Redundancy

Bridge substructure shall have the following minimum number of columns to be considered to provide conventional levels of redundancy in accordance with AASHTO LRFD *Bridge Design Specification* Section 1.3.4:

- One column minimum for roadway widths 40′ wide and under.
- Two columns minimum for roadway widths over 40′ to 60′.
- Three columns minimum for roadway widths over 60′.

Bridge superstructure shall have the following minimum number of webs to be considered to provide conventional levels of redundancy in accordance with AASHTO LRFD *Bridge Design Specification* Section 1.3.4:

- Three webs minimum for roadway widths 32′ and under.
- Four webs minimum for roadway widths over 32′. See Bridge Standard Drawing 2.3-A2-1 for details.

B. Bridge Deck Drainage

Roadway and bridge deck profiles shall be adjusted as much as possible to avoid having bridge drains on the bridge. If bridge geometry is such that drains are required, the number of drains should be minimized as much as possible while still providing a bridge deck drainage design that meets required standards. The bridge drain assembly and system shall be designed for low maintenance.

15.2.2 Railroad Crossings

A. Horizontal Clearances

For railroad overcrossings, minimum horizontal clearances are as noted below:

	Railroad Alone
Fill Section	14′
Cut Section	16′

Horizontal clearance shall be measured from the center of the outside track to the face of pier. When the track is on a curve, the minimum horizontal clearance shall be increased at the rate of 1½″ for each degree of curvature. An additional 8′ of clearance for off-track equipment shall only be provided when specifically requested by the railroad.

B. Crash Walls

Crash walls, when required, shall be designed to conform to the criteria of the *AREMA Manual*. To determine when crash walls are required, consult the following:

- Union Pacific Railroad, “Guidelines for Design of Highway Separation Structures over Railroad (Overhead Grade Separation)”
- *AREMA Manual*
- WSDOT Railroad Liaison Engineer
- The Railroad

C. Substructure

For highway over railway grade separations, the top of footings for bridge piers or retaining walls adjacent to railroad tracks shall be 2′ or more below the elevation of the top of tie and shall not have less than 2′ of cover from the finished ground. The footing face shall not be closer than 10′ to the center of the track.

15.2.3 Detour Structures

A. Live Load

See Section 3.4

B. Detour bridge traffic barrier shall be designed to meet the applicable AASHTO LRFD **criteria.**

15.2.4 Inspection and Maintenance Access

A. General

Bridges shall be configured to allow inspectors direct access to bearings, and access to within 3-feet of superstructure surfaces. See also Figure 2.3.11-1 for under-bridge-inspection-truck clearance requirements.

B. Bearings

Adequate clearance for maintenance and inspection of bearings shall be provided. The clearance shall be adequate to inspect, remove and replace the bearings.

Jacking points shall be provided for bearing replacement. Jacking points shall be designed to support 200 percent of the calculated lifting load.

C. Safety Cables and Anchors

Built-up plate girder bridges with girders 5-feet deep or greater in depth shall be detailed with safety cables for inspectors walking the bottom flanges. At large gusset plate locations on truss bridges (3-feet wide or wider), cables or lanyard anchors shall be placed on the inside face of the truss so inspectors can utilize bottom lateral gusset plates to stand on while traversing around the main truss gusset plates.

D. Abutment Slopes

Slopes in front of abutments shall provide enough overhead clearance to the bottom of the superstructure to access bearings for inspection and possible replacement (3-feet minimum for girder type bridges and 5-feet minimum for concrete slabs).

E. Access and Lighting

1. **Concrete Box and Prestressed Concrete TubGirders**

   See Section 5.2.6 for design criteria.

2. **Composite Steel Box Girders**

   See Section 6.4.9 for design criteria.

3. **Access Doors, Lighting, Receptacles and Penetrations**

   All Access doors shall have a minimum 2′-6″ diameter or 2′-6″ square clear opening. Lock box latches shall be installed on all access doors accessible from ground level. Access hatches shall swing into the box girders and shall be placed at locations that do not impact traffic. Lighting and receptacle requirements shall be in accordance with WSDOT *Design Manual* Chapter 1040. Air vents shall be in accordance with Figures 5.2.6-1 and 5.2.6-2.

   Box girder penetrations (vents and drain holes) greater than one inch in diameter through the exterior shall be covered with galvanized wire mesh screen to prevent vermin and birds from accessing the interior of the box girder. The wires shall have a maximum spacing of ¼ inch in both directions.

15.2.5 Bridge Types

Bridges shall conform to the following superstructure depth-to-span ratios based on past WSDOT experience, superseding AASHTO LRFD Section 2.5 2.6.3.

The optional live load deflection limits of AASHTO LRFD Sections 3.6.1.3.2 and 2.5.2.6.2 shall be satisfied.

For both simple and continuous spans, the span length is the horizontal distance between centerlines of bearings.

Refer to Section 2.2.4 for superstructure depth requirements for inspection and maintenance access.

For the required minimum depth to span ratios see Section 2.4.1.

15.2.6 Aesthetic Design Elements

The primary goal of the aesthetic design is to build visual compatibility between the new elements and their current surroundings. The existing elements, along with proposed and existing structures, typically establish an identifiable visual characteristic. These existing elements such as lighting fixtures, railings street hardware, construction materials, colors, and finishes, are to be included as an integral part of the new construction program. Examples of new elements may include but are not limited to:

- Bridge structure type
- Bridge structure major elements such as pier and crossbeam form
- Bridge structure minor elements such as railings and light standards
- Retaining wall materials, configuration and finishes
- Noise wall material, configuration and finishes: as viewed from the corridor
- Noise walls: as viewed from the neighborhoods
- Vista view points
- Median and roadside planting areas
- Color selection
- Opportunities for community funded art in accordance with *Design Manual* Chapter 950

Some design elements are planned to be functionally and visually consistent with features in the Project's adjacent structures. Other elements benefit by retaining flexibility within a consistent palette of materials, colors, and design forms in order to provide the design-build- process flexibility in developing potential solution.

The final design and configuration of these Project features and other functional components will require ongoing communication, review, and coordination between the design-build Contractor's design team and WSDOT's review team.

15.2.7 Architectural Design Standards

The RFP documents will include architectural standards. These will accommodate the functional requirements of the preferred design solution as well as address the contextual conditions of the Project area. They will be sensitive to corridor continuity as well as the scale, character and texture of the area.

The standards will provide a reference for the Project's context sensitive design and pass along the findings of the urban design analysis conducted during the Project's planning and early design phases. The standards describe the Project's urban design features and aide in the creation of an attractive facility that will be functional, maintainable over time, as well as add to the area's visual character.

Depending on the project complexity, the standards may be highly detailed and prescriptive or they may be more general in nature, such as a simple list of criteria.

15.2.8 Methods

The design-builder shall comply with the architectural standards. The design-builder shall also be responsive to the existing urban design documents in the adjacent corridors.

The design-builder shall employ the highest standard of care by implementing national best practices in urban design. The methods shall include, but not limited to, such techniques a Context Sensitive Design (CSS) and Crime Prevention Through Environmental Design (CEPTED).

15.2.9 Design-Builder Urban Design Team

Where required in the RFP, the design-builder shall include aesthetic design team member resources. This shall include an experienced urban designer capable of working with other team members and to address final context sensitive design issues, construction details, and special project design features. The urban designer shall be an architect with urban project experience.

The architect shall be licensed in the State of Washington and be responsible for the coordination and development of the project's architectural components. Preference shall be given to a team with an architect experienced in bridge architecture. Preference shall also be given to teams where the architect has a current standing with professional organizations such as the American Institute of Architects (AIA) or the American Institute of City Planners (AICP). The architect shall seal the applicable design documents.

When required by the RFP, and in order to assure consistency with the RFP architectural design standards, the design-builder shall form an Urban Design Team. The team shall consist of, as a minimum, a design builder project urban design manager, a WSDOT Bridge and Structures Office Structures Engineer, the WSDOT State Bridge and Structures Architect and the Region or HQ Principal Landscape Architect.

15.2.10 Analysis and Design Criteria for Structural Widenings and Modifications

The widening of a bridge shall be of a similar superstructure type as the existing. The overall appearance and geometrical dimensions of the widening shall be the same or as close as possible to those of the existing structure. Materials used in the construction of the widening shall have the same thermal and elastic properties as the materials in the original structure. Prestressed concrete girders may be used to widen existing cast-in-place concrete structures.

The members of the widening shall be proportioned to provide similar longitudinal and transverse load distribution characteristics as the existing structure.

Differential settlement between the new and existing structures shall be taken into account.

The design of the widening shall conform to current standards and not the standards used to design and construct the existing structure. The strength of the existing structure shall be checked utilizing current design standards. Existing components shall be strengthened as necessary so that their capacity/demand ratios are not worsened. Seismic design of bridge widenings shall be in accordance with Section 4.3.

Diaphragms for the widening shall coincide with and be parallel to the existing diaphragms.

Falsework for the widening shall be supported from the existing structure if the widening does not require additional girders or substructure. Otherwise, falsework for the widening shall not be supported from the existing structure.

If the widening requires additional girders or substructure, a closure strip shall be provided. All falsework supporting the widening shall be released prior to placing concrete in the closure strip. Formwork supporting the closure strip shall be supported from the existing structure and the widening.

15.2.11 Bridge Security

A. General

Where required in the RFP, new bridges shall be designed for security. Bridge abutments in particular shall be designed to deter inappropriate public use and access by illegal urban campers.

The Design-Build Contractor shall coordinate with the project urban design team to identify deterrence strategies. The principles of CPTED (Crime Prevention Through Environmental Design) shall be employed with two strategic options. The first strategy employs natural surveillance and territorial reinforcement. For conditions where the first strategy is not feasible, then a second strategy shall be provided. The second strategy provides hard armoring, such as security fences.

B. Natural Surveillance and Territorial Reinforcement

The natural surveillance and territorial reinforcement strategy shall be provided through the following:

1. The distance from the top of abutment wall to the finished grade at the face of abutment shall not be less than 10 feet in height and,
2. Horizontal graded landform shelves at the abutment face beneath superstructures shall be omitted and,
3. Alcove spaces within the abutment-superstructure interface shall be omitted and,
4. Unobstructed views for law enforcement surveillance shall be provided.

C. Hard Armoring

The hard armoring strategy shall consist of one of the following or a combination of both:

1. A security fence system with an anti-cut, anti-climb, galvanized steel welded wire mesh fabric. The steel welded wire mesh fabric shall have a minimum wire spacing of ½ inch for horizontal elements and 3 inches vertical elements. The minimum wire diameter shall be 0.162 inch (8 gauge) steel welded wire mesh. The fence system shall have the components shown in Figure 2.8.3-2. The bridge security fence shall not be connection to the bridge superstructure. The security fence may be attached to the bridge abutment, curtain walls, girder seats or retaining walls.
2. Curtain walls may be used in lieu of a security fence system. Cast in place concrete, precast concrete, or concrete masonry unit materials may be constructed as curtain walls provided they meet the project urban design goals. Figure 2.8.3-1 shows a schematic view of the curtain wall option.

15.3 Load Criteria

15.3.1 Scope

AASHTO LRFD shall be the minimum design criteria used for all projects. Additional requirements, exceptions, and deviations from AASHTO LRFD requirements are contained herein.

15.3.2 Load Factors and Load Combinations

A value of 1.0 shall be used for η_i in Equation 3.4.1-1 of AASHTO LRFD except for the design of columns when a minimum value of γ_i is required by Article 3.4.1 of AASHTO LRFD. In such a case, η_i shall be 0.95.

Strength IV load combination shall not be used for foundation design. For foundation design, loads shall be factored after distribution through structural analysis or modeling.

The design live load factor for the Service III Limit State load combination shall be as follows:

γ_{LL} = 0.8 when the requirements of Sections 5.6.1 and 5.6.2 are satisfied and stress analysis is based on gross section properties.

γ_{LL} = 1.0 when the requirements of Sections 5.6.1 and 5.6.2 are satisfied and stress analysis is based on transformed section properties.

In special cases that deviate from the requirements of Sections 5.6.1 and 5.6.2 and have been approved by the WSDOT Bridge Design Engineer, γ_{LL}, shall be as specified in the AASHTO LRFD.

The Service III live load factor for load rating shall be 1.0.

The live load factor for Extreme Event-I Limit State shall be 0.5. The base construction temperature shall be taken as 64°F for the determination of Temperature Load.

The Load Factors for Permanent Loads Due to Superimposed Deformations are provided in Table 3.53. Table 3.5-3 replaces Table 3.4.1-3 of AASHTO LRFD.

15.3.3 Permanent Loads

The design unit weights of common permanent loads shall be as shown in Table 3.8-1.

A. Future Deck Overlay Requirement

Structures that will be constructed with deck protection System 1 or 4 shall be designed to account for a 2″ thick HMA overlay placed uniformly over the entire deck area. The design need not account for the weight of the 2″ thick HMA overlay within the deck area covered by appurtenances such as, but not limited to, sidewalks and traffic barriers, which have a dead weight in excess of the 2″ thick HMA overlay.

15.3.4 Live Loads

A. Design Live Load

The design live load shall be:

- For new bridges and bridges that are modified in such a way to include new substructure elements – Live load in accordance with AASHTO LRFD
- For bridges modified in such a way that do not include new substructure elements – Live load criteria of the original design
- For bridges used for temporary detour or other temporary purposes – minimum 75 percent of HL-93 live load in accordance with AASHTO LRFD

  The application of design vehicular live loads shall be as specified in AASHTO LRFD Section 3.6.1.3. The design tandem, or "low boy", defined in LRFD Section C3.6.1.1 shall be included in the design vehicular live load.
- The effect of one design tandem combined with the effect of the design lane load specified in LRFD Article 3.6.1.2.4 and, for negative moment between the points of contraflexure under a uniform load on all spans and reactions at interior supports, shall be investigated a dual design tandem spaced from 26.0 feet to 40.0 feet apart, measured between the trailing axle of the lead vehicle and the lead axle of the trailing vehicle, combined with the design lane load. For the purpose of this article, the pairs of the design tandem shall be placed in adjacent spans in such position to produce maximum force effect. Axles of the design tandem that do not contribute to the extreme force effect under consideration shall be neglected.

B. Live Load Deflection Evaluation

Article 2.5.2.6.2 of the AASHTO LRFD is mandatory in its entirety.

C. Distribution to Superstructure

1. Cross sections a, e, k, and also i and j if sufficiently connected to act as a unit from AASHTO LRFD **Table 4.6.2.2.1-1**

The live load distribution factor shall be as follows:

- For exterior girder design with slab cantilever length equal or less than 40 percent of the adjacent interior girder spacing, use the live load distribution factor for the adjacent interior girder. The slab cantilever length is defined as the distance from the centerline of the exterior girder to the edge of the slab.
- For exterior girder design with slab cantilever length exceeding 40 percent of the adjacent interior girder spacing, use the lever rule with the multiple presence factor of 1.0 for single lane to determine the live load distribution. The live load used to design the exterior girder shall not be less than the live load used for the adjacent interior girder.

- The rigid cross section analysis described in AASHTO LRFD Section C4.6.2.2.2d shall not be used to determine live load distribution unless it can be demonstrated that the effectiveness of diaphragms on the lateral distribution of vehicular live load causes the cross section of the structure to deflect and rotate as a rigid cross section.

2. Cross section Type d from AASHTO LRFD Table 4.6.2.2.1-1

This type of cross section shall be designed as a single unit. The live load force effects shall be that of a single lane of live load multiplied by the product of the live load distribution factor for interior girders computed in accordance with AASHTO LRFD and the total number of webs in the cross section. The correction factor for live load distribution for skewed supports as specified in AASHTO LRFD Tables 4.6.2.2.2e-1 and 4.6.2.2.3c1 for shear shall apply.

3. Distribution to Substructure

The number of traffic lanes to be used in the substructure design shall be determined by dividing the entire roadway slab width by 12-feet. No fractional lanes shall be used. Bridge deck widths of less than 24 feet shall have a minimum of two design lanes.

4. Distribution to Crossbeam

The design and load rating shall be distributed to the substructure by placing wheel line reactions in a lane configuration that generates the maximum force effects in the substructure. Live loads are considered to act directly on the substructure without further distribution through the superstructure as illustrated in Figure 3.9-1.

For steel and prestressed concrete superstructure where the live load is transferred to substructure through bearings, cross frames or diaphragms, the girder reaction may be used for substructure design.

15.3.5 Noise Barrier Walls

Wind on Noise Walls shall be as specified in AASHTO LRFD Sections 3.8.1, 3.8.1.2.4, and 15.8.2.

15.4 Seismic Design and Retrofit

15.4.1 General

This chapter and the AASHTO SEISMIC are the foundation seismic design criteria documents used to design highway bridges in Washington State.

This chapter supplements and supersedes the AASHTO LRFD by providing WSDOT seismic design criteria, policy and practice.

The importance classifications for all highway bridges in Washington State are classified as "Normal" except for special major bridges. Special major bridges fitting the classifications of either "Critical" or "Essential" will be so designated in the RFP.

15.4.2 WSDOT Additions and Modifications to AASHTO Guide Specifications for LRFD Seismic Bridge Design

WSDOT modifications to the AASHTO SEISMIC are as follows:

A. Definitions

Guide Specifications Article 2

Revise existing definitions and add new definitions as follows:

- **Oversized Pile Shaft**

  A drilled shaft foundation that is larger in diameter than the supported column and has a reinforcing cage larger than and independent of the column's reinforcement cage. The size of the shaft shall be in accordance with Section 7.8.2.

- **Owner**

  Person or agency having jurisdiction over the bridge. For WSDOT projects, regardless of delivery method, the term "Owner" in these Guide Specifications shall be the WSDOT Bridge Design Engineer and/or the WSDOT Geotechnical Engineer.

B. Earthquake Resisting Systems (ERS) Requirements for Seismic Design Categories (SDCs) C and D

Guide Specifications Article 3.3

WSDOT Global Seismic Design Strategies:

- **Type 1**

  Ductile Substructure with Essentially Elastic Superstructure. This category is permissible.

- **Type 2**

  Essentially Elastic Substructure with a Ductile Superstructure. This category is not permissible.

- **Type 3**

  Elastic Superstructure and Substructure with a Fusing Mechanism Between the Two. This category is not permissible.

For Type 1 ERS for SDC C or D, if columns or pier walls are considered an integral part of the energy-dissipating system but remain elastic at the demand displacement, the forces to use for capacity design of other components shall be a minimum of 1.2 times the elastic forces resulting from the demand displacement in lieu of the forces obtained from overstrength plastic hinging analysis. Because maximum limiting inertial forces provided by yielding elements acting at a plastic mechanism level is not effective in the case of elastic design, the following constraints are imposed.

1. Unless an analysis that considers redistribution of internal structure forces due to inelastic action is performed, all substructure units of the frame under consideration and of any adjacent frames that may transfer inertial forces to the frame in question shall remain elastic at the design ground motion demand.
2. Effective member section properties shall be consistent with the force levels expected within the bridge system. Reinforced concrete columns and pier walls shall be analyzed using cracked section properties. For this purpose in absence of better information or estimated by Figure 5.6.2-1, a moment of inertia equal to one-half that of the uncracked section shall be used.
3. Foundation modeling shall be established such that uncertainties in modeling will not cause the internal forces of any elements under consideration to increase by more than 10 percent.
4. When site-specific ground response analysis is performed, the response spectrum ordinates shall be selected such that uncertainties will not cause the internal forces of any elements under consideration to increase by more than 10 percent.
5. Thermal, shrinkage, prestress or other forces that may be present in the structure at the time of an earthquake shall be considered to act in a sense that is least favorable to the seismic load combination under investigation.
6. P-Delta effects shall be assessed using the resistance of the frame in question at the deflection caused by the design ground motion.
7. Joint shear effects shall be assessed with a minimum of the calculated elastic internal forces applied to the joint.
8. Detailing as normally required in either SDC C or D, as appropriate, shall be provided.

Use of expected material strengths for the determination of member strengths for elastic response of members is permitted.

The use of elastic design in lieu of overstrength plastic hinging forces for capacity protection described above shall only be considered if designer demonstrates that capacity design of Article 4.11 of the AASHTO *Guide Specifications for LRFD Bridge Seismic Design* is not feasible due to geotechnical or structural reasons.

Type 3 ERS may be considered only if Type 1 strategy is not suitable and Type 3 strategy has been deemed necessary for accommodating seismic loads. Isolation bearings shall be designed in accordance with the AASHTO *Guide Specifications for Seismic Isolation*. Isolation bearings shall conform to Section 9.3.

Limitations on the use of ERS and ERE are shown in Figures 4.2.2-1, 4.2.2-2, 4.2.2-3, and 4.2.3-4.

- Figure 4.2.2-2 Type 6, connection with moment reducing detail should only be used at column base if proved necessary for foundation design. A fixed connection at base of column remains the preferred option for WSDOT bridges.
- The design criteria for column base with moment reducing detail shall consider all applicable loads at service, strength, and extreme event limit states.
- 4.2.2-3 Types 6 and 8 are not permissible for non-liquefied configuration and permissible for liquefied configuration.

C. Seismic Ground Shaking Hazard

Guide Specifications Article 3.4

For bridges that are considered critical or essential or normal bridges with a site Class F, the seismic ground shaking hazard shall be determined in accordance with the site specific procedure in Article 3.4.3 of the AASHTO SEISMIC.

In cases where the site coefficients used to adjust mapped values of design ground motion for local conditions are inappropriate to determine the design spectra in accordance with general procedure of Article 3.4.1 (such as the period at the end of constant design spectral acceleration plateau (T_s) is greater than 1.0 second or the period at the beginning of constant design spectral acceleration plateau (T_o) is less than 0.2 second), a site-specific ground motion response analysis shall be performed.

The spectral response parameters shall be determined using USGS 2014 *Seismic Hazard Maps and Site Coefficients* defined in Section 4.2.3.

D. Selection of Seismic Design Category (SDC)

Guide Specifications Article 3.5

A pushover analysis shall be used to determine displacement capacity for both SDCs C and D.

E. Temporary and Staged Construction

Guide Specifications Article 3.6

For bridges that are designed for a reduced seismic demand, the contract plans shall either include a statement that clearly indicates that the bridge was designed as temporary using a reduced seismic demand or show the Acceleration Response Spectrum (ARS) used for design. No liquefaction assessment required for temporary bridges.

F. Load and Resistance Factors

Guide Specifications Article 3.7

Use load factors of 1.0 for all permanent loads. The load factor for live load shall be 0.0 when pushover analysis is used to determine the displacement capacity. Use a live load factor of 0.5 for all other extreme event cases. Unless otherwise noted, all ϕ factors shall be taken as 1.0.

G. Balanced Stiffness Requirements and Balanced Frame Geometry Recommendation

Guide Specifications Articles 4.1.2 and 4.1.3

Balanced stiffness between bents within a frame and between columns within a bent and balanced frame geometry for adjacent frames are required for bridges in both SDCs C and D.

H. Selection of Analysis Procedure to Determine Seismic Demand

Guide Specifications Article 4.2

Minimum requirements for the selection of the analysis procedure to determine seismic demand shall be as specified in Tables 4.2-1 and 4.2-2 of the Guide Specifications, except Procedure 1 (Equivalent Static Analysis) shall not be used for WSDOT Bridges.

I. Member Ductility Requirement for SDCs C and D

Guide Specifications Article 4.9

In-ground hinging for drilled shaft and pile foundations may be considered for the liquefied configuration if allowed by the RFP Criteria.

J. Longitudinal Restrainers

Guide Specifications Article 4.13.1

Longitudinal restrainers shall be provided at the expansion joints between superstructure segments. Restrainers shall be designed in accordance with the FHWA *Seismic Retrofitting Manual for Highway Structure* (FHWAHRT06032), Article 8.4, the Iterative Method. Restrainers shall be detailed in accordance with the requirements of Guide Specifications Article 4.13.3 and *Bridge Design Manual* Section 4.4.4. Restrainers may be omitted for SDCs C and D where the available seat width exceeds the calculated support length specified in Equation C4.13.1-1.

Longitudinal restrainers shall not be used at the end piers (abutments).

K. Abutments

Guide Specifications Article 5.2

Abutments are revised as follows:

1. 5.2.1 - General

The participation of abutment walls in providing resistance to seismically induced inertial loads may be considered in the seismic design of bridges either to reduce column sizes or reduce the ductility demand on the columns. Damage to backwalls and wingwalls during earthquakes may be considered acceptable when considering no collapse criteria, provided that unseating or other damage to the superstructure does not occur. Abutment participation in the overall dynamic response of the bridge system shall reflect the structural configuration, the load transfer mechanism from the bridge to the abutment system, the effective stiffness and force capacity of the wall-soil system, and the level of acceptable abutment damage. The capacity of the abutments to resist the bridge inertial loads shall be compatible with the soil resistance that can be reliably

mobilized, the structural design of the abutment wall, and whether the wall is permitted to be damaged by the design earthquake. The lateral load capacity of walls shall be evaluated on the basis of a rational passive earth-pressure theory.

The participation of the bridge approach slab in the overall dynamic response of bridge systems to earthquake loading and in providing resistance to seismically induced inertial loads may be considered if allowed by the RFP Criteria.

2. 5.2.2 - Longitudinal Direction

The abutment may be considered as part of the ERS for a continuous superstructure. If the abutment is considered as part of the longitudinal ERS, the abutment stiffness and capacity shall be determined as illustrated schematically in Figure 5.2.2-a for semi-integral abutments, Figure 5.2.2-b for L-shaped abutments with backwall fuse, and Figure 5.2.2-c for L-shaped abutments without backwall fuse.

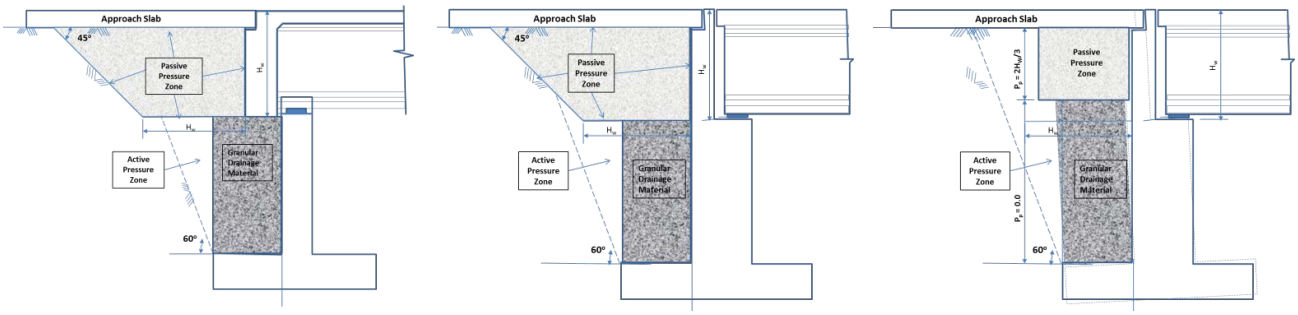

(a) Semi-integral Abutment

(b) L-shape Abutment Backwall Fuses

(c) L-shape Abutment Backwall Does Not Fuse

Abutment Stiffness and Passive Pressure Estimate
Figure 5.2.2

Abutments shall be designed to sustain the design earthquake displacements. The passive abutment resistance shall be limited to 70percent of the value obtained using the procedure given in Article 5.2.2.1.

3. 5.2.2.1 - Abutment Stiffness and Passive Pressure Estimate

Abutment stiffness, K_{eff} in kip/feet, and passive capacity, P_p in kips, shall be characterized by a bilinear or other higher order nonlinear relationship as shown in Figure 5.2.2.1. When the motion of the back wall is primarily translation, passive pressures may be assumed uniformly distributed over the height (H_w) of the backwall or end diaphragm. The total passive force shall be determined as:

$$P_p = p_p H_w W_w \qquad (5.2.2.1\text{-}1)$$

Where:

p_p = passive lateral earth pressure behind backwall or diaphragm (ksf)
H_w = height of back wall or end diaphragm exposed to passive earth pressure (feet)
W_w = width of back wall or diaphragm (feet)

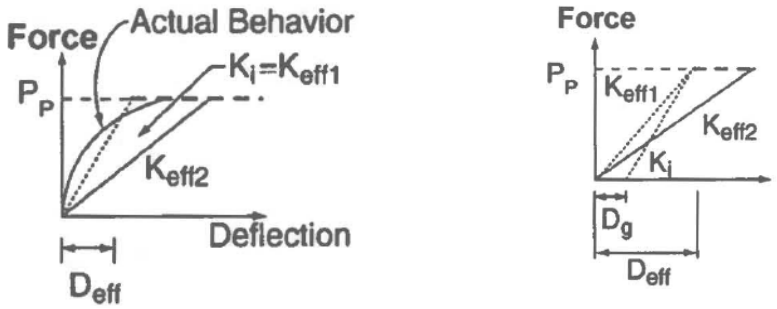

(a) Semi-integral Abutment (b) L-shape Abutment

Characterization of Abutment Capacity and Stiffness
Figure 5.2.2-1

4. 5.2.2.2 - Calculation of Best Estimate Passive Pressure P_p

If the strength characteristics of compacted or natural soils in the "passive pressure zone" are known, then the passive force for a given height, H_w, shall be calculated using accepted analysis procedures. These procedures should account for the interface friction between the wall and the soil. The properties used shall be those indicative of the entire "passive pressure zone" as indicated in Figure 1. Therefore, the properties of backfill present immediately adjacent to the wall in the active pressure zone may not be appropriate as a weaker failure surface can develop elsewhere in the embankment.

For L-shape abutments where the backwall is not designed to fuse, H_w shall conservatively be taken as the depth of the superstructure, unless a more rational soil-structure interaction analysis is performed.

If presumptive passive pressures are to be used for design, then the following criteria shall apply:

- Soil in the "passive pressure zone" shall be compacted in accordance with *Standard Specifications* Section 2-03.3(14)I.
- For cohesionless, nonplastic backfill (fines content less than 30 percent), the passive pressure p_p shall be assumed equal to $2H_w/3$ ksf per foot of wall length.
- For other cases, including abutments constructed in cuts, the passive pressures shall be developed by a geotechnical engineer.

5. 5.2.2.3 - Calculation of Passive Soil Stiffness

Equivalent linear secant stiffness, K_{eff} in kip/feet, is required for analyses. For semi-integral or L-shape abutments initial secant stiffness may be determined as follows:

$$K_{eff1} = \frac{P_p}{(F_w H_w)} \qquad (5.2.2.3\text{-}1)$$

Where:

P_p = passive lateral earth pressure capacity (kip)
H_w = height of back wall (feet)
F_w = the value of F_w to use for a particular bridge is found in Table C3.11.1-1 of the AASHTO LRFD.

For L-shape abutments, the expansion gap shall be included in the initial estimate of the secant stiffness as specified in:

$$K_{eff1} = \frac{P_p}{\left(F_w H_w + D_g\right)} \quad (5.2.2.3\text{-}2)$$

Where:

D_g = width of gap between backwall and superstructure (feet)

For SDCs C and D, where pushover analyses are conducted, values of P_p and the initial estimate of K_{eff1} should be used to define a bilinear load-displacement behavior of the abutment for the capacity assessment.

6. 5.2.3 - Transverse Direction

Transverse stiffness of abutments may be considered in the overall dynamic response of bridge systems if allowed by RFP Criteria. The transverse abutment stiffness used in the elastic demand models shall be taken as 50-percent of the elastic transverse stiffness of the adjacent bent.

Girder stops are expected to fuse at the design event earthquake level of acceleration to limit the demand and control the damage in the abutments and supporting piles/shafts. The forces generated with elastic demand assessment models shall not be used to size the abutment girder stops. Girder stops for abutments supported on a spread footing shall be designed to sustain the lesser of the acceleration coefficient, A_s, times the superstructure dead load reaction at the abutment plus the weight of abutment and its footing or sliding friction forces of spread footings. Girder stops for pile/shaft-supported foundations shall be designed to sustain the sum of 75 percent total lateral capacity of the piles/shafts and shear capacity of one wingwall.

The stiffness of fusing or breakaway abutment elements such as wingwalls (yielding or non-yielding), elastomeric bearings, and sliding footings shall not be relied upon to reduce displacement demands at intermediate piers.

Unless fixed bearings are used, girder stops shall be provided between all girders regardless of the elastic seismic demand. The design of girder stops shall accommodate unequal forces that may develop in each stop.

When fusing girder stops, transverse shear keys, or other elements that potentially release the restraint of the superstructure are used, then adequate support length meeting the requirements of Article 4.12 of the AASHTO SEISMIC shall be provided. Additionally, the expected redistribution of internal forces in the superstructure and other bridge system element shall be considered. Bounding analyses considering incremental release of transverse restraint at each end of the bridge shall also be considered.

7. 5.2.4 - Curved and Skewed Bridges

The passive pressure resistance in soils behind semi-integral or L-shape abutments shall be based on the projected width of the abutment wall normal to the centerline of the bridge. Abutment springs shall be included in the local coordinate system of the abutment wall.

L. Foundation – General

Guide Specifications Article 5.3.1

The required Foundation Modeling Method (FMM) and the requirements for estimation of foundation springs for spread footings, pile foundations, and drilled shafts shall be Modeling Method II as defined in Table 5.3.1-1.

M. Foundation – Spread Footing

Guide Specifications Article C5.3.2

Foundation springs for spread footings shall be determined in accordance with Section 7.2.7 and *Geotechnical Design Manual* Section 6.5.1.1.

N. Procedure 3: Nonlinear Time History Method

Guide Specifications Article 5.4.4

The time histories of acceleration used to describe the earthquake loads shall be selected in accordance with *Geotechnical Design Manual* Section 6-A.6.

O. Ieff for Box Girder Superstructure

Guide Specifications Article 5.6.3

The gross moment of inertia shall be used for box girder superstructure modeling.

P. Foundation Rocking

Guide Specifications Article 6.3.9

Foundation rocking shall not be used for the design of WSDOT bridges.

Q. Drilled Shafts

Guide Specifications Article C6.5

For WSDOT bridges, the scale factor for p-y curves or subgrade modulus for large diameter shafts shall not be used.

R. Longitudinal Direction Requirements

Guide Specifications Article 6.7.1

Case 2: Earthquake Resisting System (ERS) with abutment contribution may be used provided that the mobilized longitudinal passive pressure is not greater than 70 percent of the value obtained using the procedure given in Article 5.2.2.1.

S. Liquefaction Design Requirements

Guide Specifications Article 6.8

Soil liquefaction assessment shall be based on *Geotechnical Design Manual* Section 6.4.2.8.

T. Reinforcing Steel

Guide Specifications Article 8.4.1

Reinforcing bars, deformed wire, cold-draw wire, welded plain wire fabric and welded deformed wire fabric shall conform to the material standards as specified in AASHTO LRFD.

Steel reinforcement shall conform to *Standard Specifications* Section 9-07.2 and the following criteria. Only ASTM A 706 Grade 60 reinforcing steel shall be used in members where plastic hinging is expected for SDCs B, C, and D. ASTM A 706 Grade 80 reinforcing steels may be used for capacity-protected members as specified in Article 8.9. ASTM A 706 Grade 80 reinforcing steel shall not be used for oversized shafts where in-ground plastic hinging is considered as a part of ERS.

Deformed welded wire fabric shall not be used.

Wire rope or strands for spirals and high strength bars with yield strength in excess of 75 ksi shall not be used.

Guide Specifications Article C8.4.1

The requirements for plastic hinging and capacity protected members do not apply to the structures in SDC A, therefore use of ASTM A706 Grade 80 reinforcing steel is permitted in SDC A.

For SDCs B, C, and D, the moment-curvature analyses based on strain compatibility and nonlinear stress/strain relations are used to determine the plastic moment capacities of all ductile concrete members. Further research is required to establish the shape and model of the stress-strain curve, expected reinforcing strengths, strain limits, and the stress-strain relationships for concrete confined by lateral reinforcement made with ASTM A 706 Grade 80 reinforcing steel.

U. Concrete Modeling

Guide Specifications Article 8.4.4

Where in-ground plastic hinging is part of the ERS, the confined concrete core shall be limited to a maximum compressive strain of 0.008 and the member ductility demand shall be limited to 4 maximum.

V. Expected Nominal Moment Capacity

Guide Specifications Article 8.5

The expected nominal capacity of capacity protected members using ASTM A 706 Grade 80 reinforcement shall be determined by strength design formulas specified in the AASHTO LRFD based on the expected concrete strength and reinforcing steel yield strengths when the concrete reaches 0.003 or the reinforcing steel strain reaches 0.090 for #10 bars and smaller, 0.060 for #11 bars and larger.

Replace the definition of λ_{mo} with the following:

λ_{mo} = overstrength factor

= 1.2 for ASTM A 706 Grade 60 reinforcement

=1.4 for ASTM A 615 Grade 60 reinforcement

W. Interlocking Bar Size

Guide Specifications Article 8.6.7

The longitudinal reinforcing bar inside the interlocking portion of a column (interlocking bars) shall be the same size of bars used outside the interlocking portion.

X. Splicing of Longitudinal Reinforcement in Columns Subject to Ductility Demands for SDCs C and D

Guide Specifications Article 8.8.3

The splicing of longitudinal column reinforcement outside the plastic hinging region shall be accomplished using mechanical couplers that are capable of developing the tensile strength of the spliced bar. Splices shall be staggered at least 2 feet. Lap splices shall not be used. The design engineer shall clearly identify the locations where splices in longitudinal column reinforcement are permitted on the plans. In general where the length of the rebar cage is less than 60 feet (72 feet for No. 14 and No. 18 bars), no splice in the longitudinal reinforcement shall be allowed.

Y. Development Length for Column Bars Extended into Oversized Pile Shafts for SDCs C and D

Guide Specifications Article 8.8.10

Extending column bars into oversized shaft shall be in accordance with Section 7.4.4.C, based on TRAC Report WARD 417.1 "*Non-Contact Lap Splice in Bridge Column Shaft Connections*".

Z. Lateral Confinement for Oversized Pile Shaft for SDCs C and D

Guide Specifications Article 8.8.12

The requirement of this article for shaft lateral reinforcement in the column-shaft splice zone may be replaced with the requirements of Section 7.8.2.K.

AA. Lateral Confinement for Non-Oversized Strengthened Pile Shaft for SDCs C and D

Guide Specifications Article 8.8.13

Non-oversized column-shaft (the cross section of the confined core is the same for both the column and the pile shaft) is not permissible unless allowed by the RFP Criteria.

AB. Requirements for Capacity Protected Members

Guide Specifications Article 8.9

For SDCs C and D where liquefaction is identified, pile and drilled shaft inground hinging may be considered as an ERE.

Bridges shall be analyzed and designed for the non-liquefied condition and the liquefied condition in accordance with Article 6.8. The capacity protected members shall be designed in accordance with the requirements of Article 4.11. To ensure the formation of plastic hinges in columns, oversized pile shafts shall be designed for an expected nominal moment capacity, M_{ne}, at any location along the shaft, that is, equal to 1.25 times moment demand generated by the overstrength column plastic hinge moment and associated shear force at the base of the column. The safety factor of 1.25 may be reduced to 1.0 depending on the soil properties.

The design moments below ground for extended pile shaft may be determined using the nonlinear static procedure (pushover analysis) by pushing them laterally to the displacement demand obtained from an elastic response spectrum analysis. The point of maximum moment shall be identified based on the moment diagram. The expected plastic hinge zone shall extend 3D above and below the point of maximum moment. The plastic hinge zone shall be designated as a "no splice" zone and the transverse steel for shear and confinement shall be provided accordingly.

AC. Superstructure Capacity Design for Transverse Direction (Integral Bent Cap) for SDCs C and D

Guide Specifications Article 8.11

For SDCs C and D, the longitudinal flexural bent cap beam reinforcement shall be continuous. Splicing of cap beam longitudinal flexural reinforcement shall be accomplished using mechanical couplers that are capable of developing the tensile strength of the spliced bar. Splices shall be staggered at least 2 feet. Lap splices shall not be used.

AD. Superstructure Design for Non Integral Bent Caps for SDCs B, C, and D

Guide Specifications Article 8.12

Non integral bent caps shall not be used for continuous concrete bridges in SDC B, C, and D except at the expansion joints between superstructure segments.

AE. Integral Bent Cap Joint Shear Design

Guide Specifications Article 8.13.4.1.1

In addition to the T-joints listed in Article 8.13.4.1.1, the exterior column joints for box girder superstructure and other superstructures if the cap beam extends the joint far enough to develop the longitudinal cap reinforcement shall be considered T-joints for joint shear analysis in the transverse direction.

AF. CastinPlace and Precast Concrete Piles

Guide Specifications Article 8.16.2

Minimum longitudinal reinforcement of 0.75 percent of A_g shall be provided for CIP piles in SDCs B, C, and D. Longitudinal reinforcement shall be provided for the full length of pile.

15.4.3 Seismic Design Requirements for Bridge Modifications and Widening Projects

A. Seismic Analysis and Retrofit Policy

The Seismic Analysis and Retrofit Policy for Bridge Modifications and Widening Projects shall conform to Sections 4.3.1 , 4.3.2, 4.3.3, and 4.3.4.

The spectral response parameters shall be determined using USGS 2014 Seismic Hazard Maps and Site Coefficients defined in Section 4.2.3.

B. Design and Detailing Considerations

1. Support Length

The support length at existing abutments, piers, inspan hinges, and pavement seats shall be checked. If there is a need for longitudinal restrainers, transverse restrainers, or additional support length on the existing structure, they shall be included in the widening design.

2. Connections Between Existing and New Elements

Connections between the existing elements and new elements shall be designed for maximum overstrength forces. Where yielding is expected in the crossbeam connection at the extreme event limit state, the new structure shall be designed to carry live loads independently at the Strength I limit state. In cases where large differential settlement and/or a liquefaction induced loss of bearing strength are expected, the connections may be designed to deflect or hinge in order to isolate the two parts of the structure. Elements subject to inelastic behavior shall be designed and detailed to sustain the expected deformations.

Longitudinal joints that isolate the decks between the existing and new structures are not permitted.

3. Differential Settlement

The designer shall evaluate the potential for differential settlement between the existing structure and widening structure. Additional geotechnical measures may be required to limit differential settlements to tolerable levels for both static and seismic conditions. The bridge designer shall evaluate, design, and detail all elements of new and existing portions of the widened structure for the differential settlement warranted by the geotechnical engineer. Angular distortions between adjacent foundations shall not exceed 0.008 (RAD) in simple spans and 0.004 (RAD) in continuous spans.

The horizontal displacement of pile and shaft foundations shall be estimated using procedures that consider soil structure interaction (see *Geotechnical Design Manual* Section 8.12.2.3). Horizontal movement criteria shall be established at the top of the foundation based on the tolerance of the structure to lateral movement with consideration of the column length and stiffness. Tolerance of the superstructure to lateral movement will depend on bridge seat widths, bearing type(s), structure type, and load distribution effects.

4. Foundation Types

The foundation type of the new structure should match that of the existing structure. However, a different type of foundation may be used for the new structure due to geotechnical recommendations or the limited space available between existing and new structures. For example, a shaft foundation may be used in lieu of spread footing.

5. Existing Strutted Columns

The horizontal strut between existing columns may be removed. The existing columns shall then be analyzed with the new unbraced lengths and retrofitted if necessary.

6. Non Structural Element Stiffness

Median barriers and other potentially stiffening elements shall be isolated from the columns to allow column deformation.

Deformation capacities of existing bridge members that do not meet current detailing standards shall be determined using the provisions of Section 7.8 of the *Retrofitting Manual for Highway Structures: Part 1 – Bridges*, FHWAHRT06032. Deformation capacities of existing bridge members that meet current detailing standards shall be determined using the latest edition of the AASHTO SEISMIC.

In lieu of specific data, the reinforcement properties provided in Table 4.3.2-1 shall be used.

7. Isolation Bearings

Isolation bearings may be used for bridge widening projects to reduce the seismic demand through modification of the dynamic properties of the bridge. Isolation bearings shall be designed in accordance with AASHTO *Guide Specifications for Seismic Isolation* and shall conform to Section 9.3.

15.4.4 Seismic Retrofitting of Existing Bridges

Seismic retrofitting of existing bridges shall be performed in accordance with the FHWA publication FHWAHRT06032, *Seismic Retrofitting Manual for Highway Structures: Part 1 – Bridges* as follows:

- Article 1.5.3 The spectral response parameters shall be determined using USGS 2014 Seismic Hazard Maps and Site Coefficients defined in Section 4.2.3.
- Article 7.4.2 Seismic Loading in Two or Three Orthogonal

  Revise the first paragraph as follows:

  When combining the response of two or three orthogonal directions the design value of any quantity of interest (displacement, bending moment, shear or axial force) shall be obtained by the 100-30 percent combination rule as described in AASHTO *Guide Specifications* Article 4.4.
- Delete Eq. 7.44 and replace with the following:

$$Lp = \text{the maximum of } [(8800\varepsilon ydb) \text{ or } (0.08L + 4400\varepsilon ydb)] \quad (7\text{-}44)$$

- Delete Eq. 7.49 and replace with the following:

$$\phi_p = \left(5\left(\frac{V_i - V_m}{V_i - V_f}\right) + 2\right)\phi_y$$

- Delete Eq. 7.51 and replace with the following:

$$\phi_p = \left(4\left(\frac{V_{ji} - V_{jh}}{V_{ji} - V_{jf}}\right) + 2\right)\phi_y$$

A. Seismic Analysis Requirements

The multi-mode spectral analysis of *Seismic Retrofitting Manual* Section 5.4.2.2 (as a minimum) shall be used to determine the seismic displacement and force demands to identify seismically deficient elements of the existing structure. Prescriptive requirements, such as support length, shall be considered mandatory and shall be included in the analysis. Seismic capacities shall be determined in accordance with the requirements of the *Seismic Retrofitting Manual*. Displacement capacities shall be determined by the Method D2 – Structure Capacity/Demand (Pushover) Method of *Seismic Retrofitting Manual* Section 5.6. The seismic analysis need only be performed for the upper level (1,000 year return period) ground motions with a life safety seismic performance level.

B. Seismic Retrofit Design

Table 111, Chapters 8, 9, 10, 11, and Appendices D thru F of the *Seismic Retrofitting Manual* shall be used in selecting and designing the seismic retrofit measures.

C. Earthquake Restrainers

Longitudinal restrainers shall be high strength steel rods conform to ASTM F 1554 Grade 105, including Supplement Requirements S2, S3 and S5. Nuts, and couplers if required, shall conform to ASTM A 563 Grade DH. Washers shall conform to AASHTO M 293. High strength steel rods and associated couplers, nuts and washers shall be galvanized after fabrication in accordance with AASHTO M 232. The length of longitudinal restrainers shall be less than 24 feet.

D. Isolation Bearings

Isolation bearings may be used for seismic retrofit projects to reduce the demands through modification of the dynamic properties of the bridge as a viable alternative to strengthening weak elements of non-ductile bridge substructure members of existing bridge. Isolation bearings shall be designed in accordance with the requirement of the AASHTO *Guide Specifications for Seismic Isolation* and shall conform to Section 9.3.

15.5 Concrete Structures

15.5.1 General

Design of concrete structures for roadway elements such as bridges, lids, retaining walls, noise walls, three-sided structures, traffic barrier, pedestrian barrier, sign structures, bridge approach slabs, etc. shall be based on the requirements cited herein and in the current AASHTO LRFD, AASHTO SEISMIC, WSDOT Special Provisions and the WSDOT *Standard Specifications*.

15.5.2 Materials

A. Concrete

1. Cast-in-place (CIP) Concrete

Cast-in-place (CIP) concrete shall meet the requirements of Table 5.1.1-1:

Component or Application	Minimum Numerical Class and Minimum Compressive Strength at 28 days (psi)	Letter Suffix	Compressive Strength for use in Design = f'c (psi)
Commercial Concrete; Non-structural Concrete; Sidewalks; Curbs; Gutters	3000	-	Numerical Class
General Structural Concrete including Spread Footings; Walls; Columns; Crossbeams; Box Girders; Slabs; Barriers; etc.	4000	-	Numerical Class
Bridge Approach Slabs	4000	A	Numerical Class
Bridge Decks	4000	D	Numerical Class
Piles and Shafts	4000/5000	P	Numerical Class
Underwater Seals	4000	W	0.6 times Numerical Class

Table 5.1.1-1

2. Modulus of Elasticity

For calculation of the modulus of elasticity, the unit weight of plain concrete (w_c) shall be taken as 0.155 kcf for prestressed concrete girders and 0.150 kcf for normal-weight concrete unless project specific data is available. The correction factor (K_1) shall be taken as 1.0 unless project specific data is available.

3. Shrinkage and Creep

Shrinkage and creep shall be calculated with relative humidity (H) taken as 75 percent unless project specific data is available. The maturity of concrete (t) shall be taken as 2000 days. In determining the age of concrete at time of load application (t_i) one day of accelerated curing by steam or radiant heat shall be taken as equal to seven days of normal curing.

4. Grout

Grout pads with thickness exceeding 4″ shall be reinforced with steel reinforcement. Non-shrink grout conforming to *Standard Specifications* Section 9-20.3(2) shall be used in keyways between prestressed concrete girders.

5. Mass Concrete

Concrete placements with a least dimension of greater than 6-feet shall be considered mass concrete, except that shafts need not be considered mass concrete.

The temperature of mass concrete during placement and curing shall not exceed 160°F. The temperature difference between the geometric center of the mass concrete and the center of nearby exterior surfaces during placement and curing shall not exceed 35°F.

A thermal control plan shall be submitted by the Design-Builder for review and comment for mass concrete placements. The thermal control plan may include such things as: a thermal analysis; temperature monitors and equipment; insulation; concrete cooling before placement; concrete cooling after placement, such as by means of internal cooling pipes; use of smaller, less frequent placements; or other methods proposed by the Design-Builder and accepted by the WSDOT Engineer.

Concrete mix designs may be optimized (such as by using low-heat cement, fly ash or slag cement, low-water/cement ratio, low cementitious materials content, larger aggregate, etc.) as long as the concrete mix meets other project requirements.

6. Shotcrete

Shotcrete shall not be used for permanent structures, including exterior wall fascia surfaces, unless allowed by RFP Criteria. Shotcrete may be used for temporary applications.

7. Lightweight Aggregate Concrete

Lightweight aggregate concrete shall not be used, unless allowed by RFP Criteria.

B. Reinforcing Steel

1. Grades

Steel reinforcing bars shall conform to *Standard Specifications* Section 9-07.2 and Section 15.4.2.T. Use of ASTM A 706 Grade 80 steel reinforcing bars shall conform to Section 5.1.2

2. Compressive Development Length

The minimum compressive development length shall be 1′-0″.

3. Splices

Minimum lap splice lengths, for both tension and compression, shall be 2′-0″. When two bars of different diameters are lap spliced, the length of the lap splice shall be the larger of the lap splice for the smaller bar or the development length for the larger bar.

4. Welded Wire Reinforcement in Prestressed Concrete Girders, Walls, Barriers and Deck Panels

Welded wire reinforcement may be used to replace steel reinforcing bars in prestressed concrete girders, walls, barriers, and deck panels.

Welded wire reinforcement shall be deformed.

Longitudinal wires and welds shall be excluded from regions with high shear demands, including girder webs. Longitudinal wires for anchorage of welded wire reinforcement shall have an area of 40 percent or more of the area of the wire being anchored as described in ASTM A497 but shall not be less than D4.

5. Reinforcing Bar Dowels and Resin Bonded Anchors

Allowable tensile loads and minimum required embedment for reinforcing bar dowels shall be in accordance with Section 5.5.4.A.4. If it is not possible to obtain this embedment, the allowable load on the dowel shall be reduced by the ratio of the actual embedment divided by the required embedment.

Before core drilling, existing reinforcement shall be located by non-destructive methods or by chipping if existing reinforcement cannot be damaged. Core drilled holes shall be roughened.

C. Prestressing Steel

Prestressing steel shall be AASHTO M 203 Grade 270 low relaxation for strands and AASHTO M 275 Type II for bars.

The refined estimate for computing time-dependent losses shall be used.

Partial prestressing is not permitted.

15.5.3 Design Considerations

A. Service and Fatigue Limit States

The exposure factor for AASHTO LRFD Section 5.6.7 "Control of Cracking by Distribution of Reinforcement" shall be based upon a Class 2 exposure condition.

Concrete stresses in prestressed members shall be limited to the allowable stresses shown in Table 5.2.1-1.

B. Strength Limit State

The shear design of prestressed members shall be based on the general procedure of AASHTO LRFD Section 5.7.3.4.2. The shear design of non-prestressed members shall be based on either the general procedure, or the simplified procedure of AASHTO LRFD Section 5.7.3.4.1. AASHTO LRFD Section 5.8.3.4.3 "Simplified Procedure for Prestressed and Non-prestressed Sections" shall not be used.

The maximum spacing of shear and torsion reinforcement shall be 18 inches.

C. Post-Tensioning

A 2″ minimum clearance shall be provided between post-tensioning ducts with outer diameter greater than 3″. A 1″ minimum clearance shall be provided between post-tensioning ducts with outer diameter less than or equal to 3″.

Confinement reinforcement shall be provided to confine curved post-tensioning tendons in accordance with Section 5.8.1.F.

The size of the anchorage zone in the plane of anchor plates shall be large enough to provide a minimum of 1″ clearance from the plates to any free edge.

Structure shortening effects due to post-tensioning shall be included in the design.

The camber shall be shown on the plans and shall include the effect of both dead load and final prestressing.

All post-tensioning anchorages in webs of box girder or multi-stem superstructure shall be vertically aligned. Tendons adjacent to post-tensioning anchorages shall meet the minimum tangent length and minimum tendon radii requirements of Section 5.8.1.D.

15.5.4 Superstructures

A. Reinforced Concrete Superstructures

The use of CIP reinforced concrete bridge superstructures without post-tensioning shall be restricted to widening existing reinforced concrete bridge superstructures. Longitudinal post-tensioning shall be provided for all new CIP reinforced concrete bridge superstructures.

B. Box Girder Superstructures

1. Intermediate Diaphragms for Curved Concrete Box Girder Bridges

Intermediate diaphragms shall be provided for curved concrete box girder bridges with centerline radius, R, less than 800 feet. Minimum diaphragm spacing shall be as follows:

For 600 feet $\leq$ R < 800 feet - at midspan.

For 400 feet $\leq$ R < 600 feet - at ⅓ points of span.

For R < 400 feet - at ¼ points of span.

2. Temperature Effects

Thermal stresses shall be investigated in design using the following criteria:

a. A mean temperature 50°F with rise 45°F and fall 45°F for longitudinal analysis using one-half of the modulus of elasticity (Maximum Seasonal Variation.)

b. The superstructure box girder shall be designed transversely for a temperature differential between inside and outside surfaces of ±15°F with no reduction in modulus of elasticity (Maximum Daily Variation).

c. The superstructure box girder shall be designed longitudinally for a top slab temperature increase of 20°F with no reduction in modulus of elasticity.

3. Drains

Drains shall be placed in the bottom slab at the low points of each cell. Drain hole details shall be in accordance with Figure 5.3.8-1.

C. Prestressed Concrete Girder Superstructures

1. WSDOT Standard Girder Types and Construction Sequences

Prestressed concrete girders shall be a WSDOT standard girder type in accordance with Appendices 5.6-A1-1 and 5.6-A1-9.

Prestressed concrete girder superstructures shall follow a construction sequence in accordance with Appendix 5.6-A1-2.

2. Superstructure Continuity

Prestressed concrete girder superstructures shall be designed for the envelope of simple span and continuous span loadings for all permanent and transient loads. Loads applied before establishing continuity (typically before placement of continuity diaphragms) need only be applied as a simple span loading. Continuity reinforcement shall be provided at supports for loads applied after establishing continuity.

3. Continuous Structure Configuration

Girder types and spacing shall be identical in adjacent spans over intermediate piers. Girder types and spacing may be changed at expansion joints.

4. Girder Ends

Prestressed concrete girders shall have a standard end type in accordance with Section 5.6.2.E. Prestressing strands at girder ends shall be extended into diaphragms and made continuous in accordance with Section 5.1.3.D.

Girder end skew angles for trapezoidal tub, slab, wide flange deck, wide flange thin deck and deck bulb-tee prestressed concrete girders shall be limited to 30 degrees. Girder end skew angles for all other prestressed concrete girders shall be limited to 45 degrees.

The splitting resistance of pre-tensioned anchorage zones shall be as described in AASHTO LRFD Section 5.9.4.4.1. The end vertical reinforcement shall not be larger than #5 bars and spacing shall not be less than 2½″. The remaining splitting reinforcement not fitting within the h/4 zone may be placed beyond the h/4 zone at a spacing of 2½″.

5. Diaphragms

Diaphragms for prestressed concrete girder superstructures shall be cast-in-place concrete.

Diaphragms shall be oriented parallel to girder support skew. On curved bridges, diaphragms shall be placed on radial lines. Intermediate and end diaphragms shall be in accordance with Appendices 5.6-A1-1 and 5.6-A1-9.

Intermediate diaphragms shall be provided for all prestressed concrete girder bridges (except slabs) at the following locations:

- 1/5 points of span for span length > 160′-0″.
- ¼ points of span for 120′-0″ < span length ≤ 160′-0″.
- ⅓ points of span for 80′-0″ < span length ≤ 120′-0″.
- Midpoint of span for 40′-0″ < span length ≤ 80′-0″.
- No diaphragm requirement for span length ≤ 40′-0″.

Intermediate diaphragms shall be full depth for structures crossing over roads with average daily traffic (ADT) greater than 50,000, in accordance with Section 5.6.4.C.4.

6. Barrier and Sidewalk Load Distribution

The dead load of one traffic barrier or sidewalk shall not be distributed over more than three girder webs.

7. Composite Action

Composite section properties including effective flange width of the composite deck shall be in accordance with Section 5.6.2.B.

8. Dead Loads

The bridge deck dead load to be applied to a girder shall be based on the full bridge deck thickness. The pad/haunch weight due to the maximum pad/haunch height shall be added to that load over the full length of the girder.

When the depth of the pad/haunch between the top of the prestressed concrete girder and the underside of the deck at the centerline of the girder exceeds 6″, reinforcement shall be provided in the pad in accordance with Figure 5.6.4-2.

9. Girder Stirrups

Girder stirrups shall be field bent over the top mat of reinforcement in the bridge deck unless pre-bent hooks are allowed by the WSDOT standard girder type or the pre-bent hooks are within the core of the CIP deck (the inside edge of the hook terminates above the bottom mat of the deck bars).

10. Transformed Section Properties

Transformed section properties shall not be used for design of prestressed concrete girders. Gross section properties shall be used.

11. Deck Shrinkage

The elastic gain in prestressing strands due to slab shrinkage shall be computed in accordance with AASHTO LRFD Section 5.9.3.4.3.d. Deck shrinkage shall be considered as an external force applied to the composite section for the Service I, Service III, and Fatigue I limit states. The deck shrinkage strain shall be computed as 50-percent of the strain determined by AASHTO LRFD Equation 5.4.2.3.3-1.

12. Deck Girder Superstructures

The term "deck girder" refers to a prestressed concrete girder whose top flange or surface is the driving surface, with or without an overlay, including slab and deck bulb-tee girders.

Deck girders without a composite CIP deck slab shall have a minimum concrete cover of 2″ over the top mat. The top mat of reinforcement in the top flange shall be epoxy-coated.

13. Slab Girders

Slab girder spans between centerline bearings shall be limited to the prestressed concrete girder height multiplied by 30. A minimum 5″ composite CIP bridge deck shall be placed over slab girders directly supporting traffic loadings. The CIP concrete bridge deck shall at a minimum be Class 4000D concrete with one layer of #5 epoxy coated reinforcement in both the transverse and longitudinal directions. The longitudinal reinforcement shall be spaced at 12 inches maximum and the transverse reinforcement shall be spaced at 6 inches maximum.

14. Deck Bulb-Tee Girders

Deck bulb-tee girders shall be limited to pedestrian bridges, temporary bridges and to widening existing similar structures.

Deck bulb-tee girders shall have an HMA or concrete overlay. A waterproofing membrane shall be provided with an HMA overlay.

15. Wide Flange Deck Girders

Wide flange deck girders shall be limited to pedestrian bridges, temporary bridges and to widening existing similar structures.

Wide flange deck girders shall have an HMA or concrete overlay. A waterproofing membrane shall be provided with an HMA overlay.

16. Wide Flange Thin Deck Girders

Wide flange thin deck girders shall have a minimum 5″ thick composite CIP bridge deck. The CIP concrete bridge deck shall at a minimum be Class 4000D concrete with one layer of #5 epoxy coated reinforcement in both the transverse and longitudinal directions. The longitudinal reinforcement shall be spaced at 12 inches maximum and the transverse reinforcement shall be spaced at 6 inches maximum.

17. Tub Girders

Drains shall be placed in the centerline of the bottom flange at the low points of each cell. Drain hole details shall be in accordance with Appendices 5.6-A1-1 and 5.6-A1-9.

18. Spliced Prestressed Concrete Girders

Closure joints shall be CIP concrete with a minimum length of 2′-0″. The sequence of placing concrete for the closure joints and deck shall be specified in the plans.

Concrete cover to web stirrups at the CIP closure at pier diaphragms shall not be less than 2½″. If intermediate diaphragm locations coincide with CIP closures between precast segments, then the concrete cover at the CIP closures shall not be less than 2½″.

15.5.5 Concrete Bridge Decks

Concrete bridge decks shall be designed using the Traditional Design of AASHTO LRFD Section 9.7.3.

For web spacing in excess of 12 feet or cantilever overhang in excess of 6 feet, transverse post-tensioning shall be provided in the deck.

For structures that include sidewalks, the construction joint between the sidewalk and the deck shall be a smooth surface.

Longitudinal expansion or isolation joints in bridge decks are not permitted.

A. Bridge Deck Requirements

The minimum bridge deck thickness shall be 5″ for slab and deck bulb-tee prestressed concrete girder superstructures, 7.5″ for other concrete superstructures, 8.0″ for steel girder superstructures, and 8.5″ (including 3.5″ stay-in-place deck panel and 5″ CIP concrete deck) for superstructures with SIP deck panels. This minimum thickness may be reduced by 0.5″ for bridges with Deck Protection Systems 2, 3 and 5.

The distance from the top of the bridge deck to the top of the girder at centerline bearing at centerline of girder is represented by the "A" Dimension. It shall be calculated and shown in the plans in accordance with Appendix 5-B1.

A roughened surface or a shear key shall be provided at deck construction joints.

B. Bridge Deck Reinforcement

Top transverse reinforcement shall be hooked at the deck slab edge unless a traffic barrier is not used.

Longitudinal deck slab reinforcement shall be provided in accordance with Section 5.7.2.B.

The minimum clearance between top and bottom reinforcing mats shall be 1″.

The minimum cover over the top layer of reinforcement shall be in accordance with the appropriate Deck Protection System. The minimum cover below the bottom layer reinforcement shall be 1.0″.

The minimum amount of reinforcement in each direction shall be 0.18 in^2/feet for the top mat and 0.27 in^2/feet for the bottom mat.

The maximum bar spacing in both transverse and longitudinal directions for the top mat, and transverse direction of the bottom mat shall not exceed 12″. The maximum bar spacing for the bottom longitudinal direction within the effective length, as specified in AASHTO LRFD Section 9.7.2.3, shall not exceed the deck thickness.

C. Stay-in-Place (SIP) Deck Panels

SIP deck panels shall be precast concrete and their details shall be in accordance with Bridge Standard Drawing 5.6-A10-1. SIP steel deck forms are not permitted.

SIP deck panels shall not be used in longitudinal negative moment regions of continuous superstructures, unless the deck is longitudinally post-tensioned.

For a bridge widening or phased construction, SIP deck panels shall not be used in the bay adjacent to the existing structure.

SIP deck panels shall not be used on prestressed concrete girders with flanges less than 12″ wide.

SIP deck panels shall not be used on steel girder bridge superstructures.

D. Bridge Deck Protection

All new bridge decks, precast or cast-in-place slabs, and deck girder structures shall utilize a deck protection system in accordance with this section and Section 5.7.4.A. Widening of existing bridge decks and slab bridges shall be in accordance with Section 5.7.4.B.

E. Bridge Deck HMA Paving

Asphalt resurfacing including bituminous surface treatment (BST) on bridge decks and slab bridges shall be in accordance with the Bridge deck Condition Report (BCR) provided for each bridge. Construction shall be in accordance with the bridge paving specifications included in the RFP.

15.6 Steel Structures

15.6.1 Design Considerations

A. Codes, Specification, and Standards

Steel highway bridges shall be designed to the following codes and specifications:

- AASHTO LRFD, latest edition
- AASHTO SEISMIC

The following codes and specifications shall govern steel bridge construction:

- WSDOT *Standard Specifications*, latest edition
- AASHTO/AWS D1.5M/D1.5: *Bridge Welding Code*, latest edition

B. WSDOT Steel Bridge Practice

Unshored composite construction is used for plate girder and box girder bridges. Shear connectors shall be placed throughout positive and negative moment regions, for full composite behavior. A minimum of one percent longitudinal deck steel, in accordance with AASHTO LRFD Article 6.10.1.7, shall be placed in negative moment regions. For service level stiffness analysis, such as calculating live load moment envelopes, the bridge deck shall be considered composite and uncracked for the entire bridge length. For negative moment at strength limit states, the bridge deck shall be ignored while reinforcing steel is included for stress and section property calculations.

Stiffeners used to connect cross frames shall be welded to top and bottom flanges. Jacking stiffeners shall be used adjacent to bearing stiffeners, on girder or diaphragm webs, in order to accommodate future bearing replacement. Coordinate jack placement in substructure and girder details.

Steel framing shall consist of main girders and cross frames. Bottom lateral systems shall only be used when required for torsional stability in curved bridges and when temporary bracing is not practical. When lateral systems are used, they shall be detailed carefully for adequate fatigue life.

Standard corrosion protection for steel bridges is the *Standard Specifications* four-coat paint system west of the Cascades and where paint is required for appearance. Unpainted weathering steel shall only be used east of the Cascades.

WSDOT does not allow the use of steel stay-in-place deck forms.

C. Preliminary Girder Proportioning

Live load deflections shall be limited in accordance with the optional criteria of AASHTO LRFD Articles 2.5.2.6.2 and 3.6.1.3.2.

The superstructure depth shall be shown as the distance from the top of the bridge deck to the bottom of the web. On straight bridges, interior and exterior girders shall be designed and detailed as identical. Spacing should be such that the distribution of wheel loads on the exterior girder is close to that of the interior girder. The number of girder lines should be minimized, with a maximum spacing of 14-16 feet. Steel bridges shall be redundant, with three or more girders lines for I girders and two or more boxes for box girders, except as otherwise allowed by the RFP Criteria.

D. Bridge Steels

Use AASHTO M 270/ASTM A 709 grades 50 or 50W for plate girders and box girders. Use of AASHTO M 270/ASTM A 709 Grade HPS 70W is permissible but availability is limited and shall be confirmed prior to actual use in design. AASHTO M 270 grades HPS 50W and HPS100W may only be used if allowed by the RFP Criteria. For wide flange beams, use AASHTO M 270/ASTM A 709 Grade 50S or ASTM A 992. For ancillary members such as expansion joint headers, utility brackets, bearing components or small quantities of tees, channels, and angles, ASTM M 270/ASTM A 709 bridge steels are acceptable but are not required. In these cases, equivalent ASTM designated steels may be used.

All main load-carrying members or components subject to tensile stress shall be identified in the plans and shall meet the minimum Charpy V-notch (CVN) fracture toughness values as specified in AASHTO LRFD Table 6.6.2-2, temperature zone 2. Fracture critical members or components shall also be designated in the plans.

Structural tubes and pipes are not considered prequalified under the *Bridge Welding Code*. They are covered under the Structural Welding Code AWS D1.1. Structural tubing ASTM A 500 shall not be used for dynamic loading applications. ASTM A 1085 is a newer cold formed and welded HSS section specification that is a Gr 50 steel. Supplements for heat treating and CVNs are included and may also be specified. CVN tests are typically performed in the flats of the HSS square or rectangular tube sections. CVN values in the bend radius of the tubes are lower than values obtained in the flats. Heat treating of the sections can improve the values, but no data is currently available. ASTM A 1085 shall also not be specified for dynamic loading applications. Availability and minimum tonnage orders shall be investigated prior to specifying ASTM A 1085.

E. Plate Sizes

Plate thicknesses of less than 5/16 inches shall not be used for bridge applications.

F. Fasteners

All bolted connections shall be friction type (slip-critical). Assume Class B faying surfaces where inorganic zinc primer is used.

General Guidelines for Steel Bolts

A. ASTM F 3125 GR A325 & GR F1852

High strength steel, headed bolts for use in structural joints. These bolts may be hot-dip galvanized but shall not be used in structures that are painted. Do not specify for anchor bolts.

B. A449

High strength steel bolts and studs for general applications including anchor bolts. Recommended for use where strengths equivalent to ASTM F3125 GR A325 bolts (up to 1" diameter) are desired but custom geometry or lengths are required. These bolts may be hot-dip galvanized. Do not use these as anchor bolts for seismic applications due to low CVN impact toughness.

C. F1554 - Grade 105

Higher strength anchor bolts to be used for larger sizes (1½″ to 4″). When used in seismic applications, specify supplemental CVN requirement S5. Lower grades may also be suitable for sign structure foundations. This specification shall be used for seismic restrainer rods, and may be galvanized. The equivalent AASHTO M 314 shall not be specified as it does not include the CVN supplemental requirements.

D. ASTM F3125 GR A490 & GR F2280

High strength alloy steel, headed bolts for use in structural joints. These bolts shall not be galvanized, because of the high susceptibility to hydrogen embrittlement. In lieu of galvanizing, the application of an approved zinc rich paint may be specified. Do not specify for anchor bolts.

E. A354 - Grade BD

High strength alloy steel bolts and studs. These are suitable for anchor bolts where strengths equal to A490 bolts are desired. These bolts shall not be galvanized. If used in seismic applications, specify minimum CVN toughness of 25 feet-lb at 40°F.

15.6.2 Girder Bridges

A. Tub or Box Girders

Steel box girders shall be trapezoidal tub sections. Tub girders will be referred to herein as box girders, as in AASHTO LRFD Article 6.11.

A top lateral system shall be placed inside the girder and shall be treated as an equivalent plate for design, closing the open section and providing torsional stiffness until the bridge deck is fully cured. Stability of the shape shall be ensured for all stages of construction in accordance with AASHTO LRFD Article 6.11.3. Box girder bridges with a multiple box girder cross section shall have a single bearing per box. For bridges of a single box girder cross section, two bearings per box shall be used. Plate diaphragms with access holes shall be used in place of pier cross frames.

With the exception of effects from inclined webs, top flanges and webs shall be designed as if they were part of individual I-girders.

In order to maximize web spacing while minimizing bottom flange width, place webs out of plumb on a slope of 1 in 4. When required to stiffen bottom flanges in compression tee sections shall be used for longitudinal stiffeners. Channel bracing may be used at cross frame locations for transverse stiffeners. Bottom flange stiffeners shall be terminated at field splices. Otherwise, carefully ground weld terminations are required in tension regions with high stress range. Stiffener plates shall be welded across the bottom flange at cross frame locations, and shall not be combined with web vertical stiffeners.

B. Fracture Critical Superstructures

Non-redundant, fracture critical single tub superstructures, and twin I-girder systems, may only be considered if allowed by RFP Criteria. UBIT access or some form of permanent false decking or other inspection access is required for fracture critical inspections. The maximum roadway width for either a single box or twin I-girder superstructure is 27 feet. Where roadway width exceeds 27 feet, additional webs/girders shall be used. Mainline structures exceeding 38 feet in width shall use four webs/girders minimum.

Increased vertical clearance from mainline traffic shall be provided for either of these bridge types. The minimum is 20 feet. The web depths may be reduced below AASHTO LRFD Table 2.5.2.6.3-1 minimums provided live load deflection criteria are met. However, web depth less than 5′-0″ is not permitted. The limit state load modifier relating to redundancy, $\eta_r = 1.05$, as specified in AASHTO LRFD Section 1.3.4, shall be used in the design of non-redundant steel structures. For load rating non-redundant bridges, a system factor of 0.85 is required in the AASHTO *Manual for Bridge Evaluation* (MBE) on the axial and flexural capacity of the girders. The girder design shall satisfy both the AASHTO LRFD code and the MBE.

The AASHTO LRFD approximate live load distribution factors are not applicable to these girder types. The level rule or the preferred refined analysis shall be used. Where highly curved, only a refined analysis shall be used.

15.6.3 Design of I-Girders

A. Limit States for AASHTO LRFD

The fatigue live load specified in AASHTO LRFD Article 3.6.1.4 shall be used for checking girder details in accordance with article 6.6. It is generally possible to meet the constant amplitude fatigue limit (CAFL) requirement for details with good fatigue performance. Limiting the calculated fatigue range to the CAFL ensures infinite fatigue life. Webs shall be checked for fatigue loading in accordance with AASHTO LRFD Article 6.10.5.3, using the calculated fatigue stress range for flexure or shear. Flanges and webs shall meet strength limit state requirements for both construction and final phases.

Pier cross frames shall be designed for seismic loading, extreme event load combination. Bolts shall be treated as bearing type connections with AASHTO LRFD Article 6.5.4.2 resistance factors. The resistance factor for all other members is 1.0 at extreme limit state.

B. Composite Section

Live load plus impact shall be applied to the transformed composite section using Es/Ec, commonly denoted n. Long-term loading (dead load of barriers, signs, luminaries, overlays, etc.) shall be applied to the transformed composite section using 3n. Positive moments are applied to these composite sections accordingly; both for service and strength limit states. The bridge deck may be considered effective in negative moment regions provided tensile stresses in the deck are below the modulus of rupture. This is generally possible for Service I load combination and fatigue analysis. For strength limit state loadings, the composite section includes longitudinal reinforcing while the bridge deck is ignored.

C. Flanges

The maximum flange thickness is 3-inches. All plates for flange material shall be purchased such that the ratio of reduction of thickness from a slab to plate shall be at least 3.0:1.

As an alternative, plates for flange material greater than 2″ thick not meeting the 3.0:1 ratio of reduction may be supplied based on acceptable ultrasonic testing (UT) inspection in accordance with ASTM A 578. UT scanning and acceptance shall be as follows:

- The entire plate shall be scanned in accordance with ASTM A 578 and shall meet Acceptance Standard C, and
- Plate material within 12-inches of flange complete joint penetration splice welds shall be scanned in accordance with ASTM A 578 Supplementary S1 and shall meet Acceptance Standard C

D. Webs

If different web thickness is needed, the transition shall be at a welded splice. Horizontal web splices shall not be used unless web height exceeds 12′-6″. All welded web splices on exterior faces of exterior girders and in tension zones elsewhere shall be ground smooth. Web splices of interior girders need not be ground in compression zones.

E. Transverse Stiffeners

Transverse stiffeners shall be used in pairs at cross frame locations on interior girders and on the inside of webs of exterior girders. They shall be welded to the top flange, bottom flange and web at these locations. This detail is considered fatigue category C' for longitudinal flange stress. Stiffeners used between cross frames shall be located on one side of the web, welded to the compression flange, and cut short of the tension flange. Stiffeners located between cross frames in regions of stress reversal shall be welded to one side of the web and cut short of both flanges. Alternatively, they may be welded to both flanges if fatigue Category C' is checked.

Stiffened webs require end panels to anchor the first tension field. The jacking stiffener to bearing stiffeners space shall not be used as the anchor panel. The first transverse stiffener shall be placed at no greater spacing than 1.5 times the web depth from the bearing or jacking stiffener.

F. Longitudinal Stiffeners

Longitudinal stiffeners may be used in long spans where web depths exceed 10 feet in accordance with AASHTO LRFD Article 6.10.11.3. Weld terminations for longitudinal stiffeners are fatigue prone details and shall be detailed accordingly. Longitudinal stiffener plates shall be continuous, splices being made with full penetration welds before being attached to webs. Transverse stiffeners shall be pieced to allow passage of longitudinal stiffeners.

G. Bearing Stiffeners

Bearing stiffeners shall be vertical under total dead load.

Pier cross frames may transfer large seismic lateral loads through top and bottom connections. Weld size shall be designed to ensure adequate load path from deck and cross frames into bearings.

H. Cross Frames

Cross frames and connections shall be detailed for repetitive fabrication, adjustment in the field, and openness for inspection and painting. Cross frames consisting of back-to-back angles separated by gusset plates are not permitted. Cross frames are generally patterned as K-frames or as X-frames. Oversize holes will not be allowed in cross frame connections if girders are curved.

Intermediate cross frames for straight girders with little or no skew shall be designed as secondary members. Member sizes shall be selected to meet minimum slenderness requirements and design connections only for anticipated loads, not for 75 percent strength of member.

Cross frames shall be installed parallel to piers for skew angles of 0 degrees to 20 degrees. For greater skew angles, other arrangements may be used. Cross frames for curved girder bridges are main load carrying members and tension components shall be so designated in the plans. Web stiffeners at cross frames shall be welded to top and bottom flanges.

I. Bottom Laterals

In accordance with 6.1.2, bottom lateral systems shall be avoided except when required for stability in curved bridges and shall be used only when temporary bracing is not practical.

Where lateral gusset plates are fillet welded to girder webs, the fatigue stress range in the girder is limited to Category E without transition radius or Category D with carefully made transition radius. The gusset plates shall be bolted to the girder web in regions of high tension stress range.

J. Bolted Field Splice for Girders

Field splices shall be bolted. Bolted web splices shall not involve thin fill material. Thickness transitions for webs, if needed, shall be done with welded shop splices.

Fillers used in bolted splices shall be developed as specified in AASHTO LRFD Article 6.13.6.1.5. Splice bolts shall be checked for Strength load combinations and slip at Service II load combination. When faying surfaces are blasted and primed with inorganic zinc paint, a Class B surface condition shall be assumed.

K. Camber

Camber shall include effects of profile grade, superelevation, anticipated dead load deflections, and bridge deck shrinkage (if measurable). Permanent girder deflections shall be shown in the plans in the form of camber diagrams and tables. Dead load deflections are due to steel self-weight, bridge deck dead load, and superimposed dead loads such as overlay, sidewalks, and barriers. A constant distance from top of web to top of bridge deck shall be assumed for design,

however forms and haunch height shall be adjusted to meet bridge deck thickness and profile as specified in *Standard Specifications* Section 6-03.3(39).

Two camber curves are required, one for total dead load plus bridge deck formwork and one for steel framing self-weight. The difference between these curves is used to set bridge deck forms.

Girder self-weight shall include the basic section plus stiffeners, cross frames, welds, shear studs, etc. These items may be accounted for by adding an appropriate percentage of basic section weight. Total dead load camber shall consist of deflection due to:

1. Steel weight, applied to steel section. Include 10 psf bridge deck formwork allowance in the total dead load camber, but not in the steel weight camber. The effect of removing formwork is small in relation to first placement, due to composite action between girders and bridge deck. It isn't necessary to account for the removal.
2. Bridge deck weight, applied to steel section.
3. Traffic barriers, sidewalks, and overlays, applied to long-term composite section using 3n. Do not include weight of future overlays in the camber calculations.
4. Bridge deck shrinkage (if ≥ ¾″).

Traffic barriers, sidewalks, overlays, and other items constructed after the bridge deck placement shall be analyzed as if applied to the long-term composite section full length of the bridge. The modulus of elasticity of the bridge deck concrete shall be reduced to one third of its short term value.

For bridge deck shrinkage calculation, apply a shrinkage strain of 0.0002 to the long-term composite section using 3n.

In addition to girder deflections, girder rotations at bearing stiffeners shall be shown. Camber tolerance is governed by the *Bridge Welding Code* AWS D1.5, Chapter 3.5. A note of clarification shall be added to the plan camber diagram: "For the purpose of measuring camber tolerance during shop assembly, assume top flanges are embedded in concrete without a designed haunch." This allows a high or low deviation from the theoretical curve, otherwise no negative camber tolerance is allowed.

A screed adjustment diagram shall be included with the camber diagram. This diagram, with dimension table, shall be the remaining calculated deflection just prior to bridge deck placement, taking into account the estimated weight of deck formwork and deck reinforcing. The weight of bridge deck formwork may be taken equal to 10 psf, or the assumed formwork weight used to calculate total camber. The weight of reinforcing may be taken as the span average distributed uniformly. The screed adjustment should equal: (Total Camber – Steel Camber) - (deflection due to forms + rebar). The screed adjustment shall be shown at each girder line. This will indicate how much deflection and twisting is anticipated during bridge deck placement, primarily due to span curvature and/or skew. These adjustments shall be applied to theoretical profile grades, regardless of actual steel framing elevations. The adjustments shall be designated "C". The diagram shall be

designated as "Screed Setting Adjustment Diagram." The table of dimensions shall be kept separate from the girder camber, but at consistent locations along girders. That is, at 1/10th points or panel points. A cross section view shall be included with curved span bridges, showing effects of twisting.

For the purpose of setting bridge deck soffit elevations, a correction shall be made to the plan haunch dimension based on the difference between theoretical flange locations and actual profiled elevations. The presence of bridge deck formwork shall be noted at the time of the survey. The presence of false decking need not be accounted for in design or the survey.

L. Bridge Deck Placement Sequence

The bridge deck shall be placed in a prescribed sequence allowing the concrete in each segment to shrink with minor influence on other segments. Negative moment regions (segments over interior piers) shall be placed after positive moment regions have had time to cure. Successive segments shall not be placed until previous segments attain sufficient strength. The designer shall check bridge deck tensile stresses imposed on adjoining span segments.

M. Bridge Bearings for Steel Girders

Make bearing selection consistent with required motions and capacities.

N. Surface Roughness and Hardness

The standard measure of surface roughness is the microinch value. Surface roughness shall be shown on the plans for all surfaces for which machining is required unless covered by the *Standard Specifications* or Special Provisions. Surface hardness of thermal cut girder flanges is also controlled.

O. Welding

The minimum fillet weld size shall be as shown in the following table. Weld size is determined by the thicker of the two parts joined unless a larger size is required by calculated stress. The weld size need not exceed the thickness of the thinner part joined.

Base Metal Thickness of Thicker Part Joined	Minimum Size of Fillet Weld
To ¾″ inclusive	¼″
Over ¾″	5⁄16″

P. Shop Assembly

For straight girders, a progressive longitudinal shop assembly shall be performed to ensure proper fit of subsections, field splices, and cross frame connections, etc., in the field. Progressive transverse assembly, in combination with progressive longitudinal assembly shall be performed for bridges with horizontal curvature or skews greater than 20-degrees. For transverse assembly, specify all cross frame and pier diaphragm connections to be completed while assembled.

During shop assembly, girder segments shall be blocked or supported in the no-load condition (no gravity effects). For curved I-girders, cross frames shall be fabricated to fit the no-load condition. Design of cross frames and pier diaphragms

shall take into account twist and rotations of webs during construction. This situation should be carefully studied by finite element analysis to determine amount and type of movement anticipated during construction. Unlike curved girders rotating away from plumb at midspan, girder webs for skewed construction shall be kept plumb at piers.

For bridges with skews greater than 20-degrees, the fit of girder segments, cross frames, and pier diaphragms shall be carefully analyzed during design to select the proper fit condition, which shall be either the no-load condition of the steel dead load condition. The detailing, fabrication, and shop assembly shall be specified to match the condition used in the analysis and design.

15.6.4 Plan Details

A. General

Detailing practice shall follow industry standards. Designations for structural steel can be found in AISC *Detailing for Steel Construction*. Detailing shall also conform to national unified guidelines published by AASHTO/NSBA *Steel Bridge Collaboration*.

Connections in the field shall be bolted. Cross frame members may be shop bolted or welded assemblies and shall be shipped to the field in one unit. Connections of bolted cross frame assemblies shall be fully tensioned prior to shipping. Cross frame assemblies shall be field bolted to girders during erection.

B. Framing Plan

The Framing Plan shall show ties between the survey line, girder lines, backs of pavement seats, and centerlines of piers. Locate panel points (cross frame locations). Provide geometry, bearing lines, and transverse intermediate stiffener locations. Show field splice locations. Map out different lateral connection details.

C. Girder Elevation

The Girder Elevation is used to define flanges, webs, and their splice locations. Show shear connector spacing, location, and number across the flange. Show shear connector locations on flange splice plates or specifically call out when no connectors are required on splice plates. Locate transverse stiffeners and show where they are cut short of tension flanges. Show the tension regions of the girders with a V for the purpose of ordering plate material, inspection methods (NDE), and *Bridge Welding Code* acceptance criteria. Identify tension welded butt splices for which radiographic examination (RT) is required. Permissible welded web splices shall be shown. If there are fracture critical components, they shall be clearly identified as FCM.

D. Typical Girder Details

Specific sheets shall be devoted to showing typical details to be used throughout the girders. Such details include the weld details, various stiffener plates and weld connections, locations of optional web splices, and drip plate details. Field splices for flanges shall accommodate web location tolerance of ± ¼″ in accordance with the AWS *Bridge Welding Code* 3.5.1.5. Allow a minimum of ¼″ for out of position web plus ⅜″ for fillet weld, or a total of ⅝″ minimum clear between theoretical

face of web and edge of splice plate. The bottom flange splice plate shall be split to allow moisture to drain (use 4 equal bottom flange splice plates). The fill plate does not need to be split.

Vertical stiffeners used to connect cross frames shall be welded to top and bottom flanges to reduce out-of-plane bending of the web. All stiffeners shall be coped, clipped (or cut short in the case of transverse stiffeners without cross frames) a distance between 4tw and 6tw to provide web flexibility, in accordance with AASHTO LRFD Article 6.10.11.1.1.

F. Cross Frame Details

Show member sizes, geometrics (work lines and work points), and connection details. Double angles shall not be used for cross frames. Cross frames shall be complete subassemblies for field installation.

Internal cross frames and top lateral systems for box girders are shop welded, primarily. All connection types shall be closely examined for detail conflict and weld access. Clearance between bridge deck forming and top lateral members shall be considered.

G. Camber Diagram and Bearing Stiffener Rotation

Camber curves shall be detailed to provide dimensions at tenth points. Dimensions may also be given at cross frame locations. In order to place bearing stiffeners in the vertical position after bridge deck placement, show expected girder rotations at piers.

Show deflection camber only. Geometric camber for profile grade and superelevation will be calculated by the shop detailer from highway alignment shown on the Layout sheets.

A separate diagram and table, with bridge cross section, shall be included to show how elevations at edges of deck can be determined just before concrete placement. This will give adjustments to add to profile grades, based on remaining dead load deflections, with deck formwork and reinforcing being present.

H. Bridge Deck

New bridge decks for steel I-girders or box girders shall use Deck Protection System 1.

The bridge deck shall be detailed in section and plan views. For continuous spans, show a section showing negative moment longitudinal reinforcing. The plan views shall detail typical reinforcing and cutoff locations for negative moment steel. Negative moment steel shall not be terminated at one location.

The pad dimension is assumed to be constant throughout the span length. Ideally, the girder is cambered to compensate for dead loads and vertical curves. However, fabrication and erection tolerances result in considerable deviation from theoretical elevations. The pad dimension is therefore considered only a nominal value and is adjusted as needed along the span once the steel has been erected and profiled. The screed for the slab is to be set to produce correct roadway profile. The plans shall reference this procedure contained in *Standard Specifications* Section 6-03.3(39). The pad dimension is to be noted as nominal.

I. Handrail Details, Inspection Lighting, and Access

When required by the RFP Criteria, include handrails with typical girder details. Locations may be adjusted to avoid conflicts with other details such as large gusset plates. Box girders require special consideration for inspection access. Access holes or hatches shall be detailed to exclude birds and the public. They shall be positioned where ladders can be used to gain access. Locate hatches in girder webs at abutments. Provide for round trip access and penetrations at all intermediate diaphragms. Access for removing bridge deck formwork shall be provided. Box girders shall have electrical, inspection lighting, and ventilation details for the aid of inspection and maintenance. Refer to the *Design Manual* Chapter 1040 for bridge inspection lighting requirements.

To facilitate inspection, interior paint shall be Federal Standard 595 color number 17925 (white). One-way inspection of all interior spaces shall be made possible by round trip in adjoining girders. This requires some form of walkway between boxes and hatch operation from both sides. If locks are needed, they must be keyed to one master. Air vents shall be placed along girder webs to allow fresh air to circulate.

J. Box Girder Details

Provide a top lateral system in each box, full length of a girder.

The top laterals shall be bolted directly to the top flange or intermediate bolted gusset plate (in which case, the lateral members may be welded to the gusset plate). In order to maximize the clearance for deck forms, all lateral connections shall progress down from the bottom surface of the top flange. The haunch distance between top of web and deck soffit shall be 6″ or greater to allow deck forming to clear top lateral members.

To facilitate continuous welding of the bottom flange to webs, the stiffeners shall be held back and attached to the bottom flange by a member brought in after the bottom longitudinal welds are complete.

The offset between center of web and edge of bottom flange shall be 2″

Use tee shapes, either singly or in pairs, for stiffening wide bottom flanges.

Box girder inside clear height shall be 5 feet or more to provide reasonable inspection access. Less than 5 feet inside clear height is not be permitted.

Drain holes shall be installed at all low points.

Geometrics for boxes shall be referenced to a single workline, unless box width tapers. The box cross section remains tied to a centerline intersecting this workline and normal to the bridge deck. The section rotates with superelevation transition rather than warping.

15.7 Substructure Design

15.7.1 General Substructure Considerations

A. Foundation Seals

The bottom of seal, if used, shall be no higher than the scour depth elevation.

B. Scour

The design flood local scour depth (l00 year event) shall be included in the Strength I limit state analysis, and the check flood local scour depth (500 year event) shall be included in the Extreme Event II limit state analysis. When including the effects of scour, the design shall consider the loss of overburden and foundation side resistance.

Where lateral stream migration is a possibility, the design shall include a reliability-based estimate of the effects on the structure.

C. Combination of Extreme Event Effects

1. Downdrag

Seismic soil liquefaction induced downdrag forces shall be included in the Extreme Event I limit state. Downdrag loads may be decoupled from the inertial and overstrength load effects.

2. Lateral Ground Displacement

Where lateral ground displacement (e.g. lateral spreading and lateral flow) is expected, the ground displacement may be decoupled from the inertial and overstrength load effects. See WSDOT *Geotechnical Design Manual* Sections 6.4.2.8 and 6.5.4.2 for additional guidance on combining loads when lateral ground displacement occurs.

3. Scour

The effects of local scour shall be combined with earthquake loading. At the Extreme Event I limit state, the design shall consider a scour depth equal to 25 percent of the design flood scour depth.

15.7.2 Foundation Modeling for Seismic Loads

A. General

Bridge modeling for seismic events shall be in accordance with requirements of the AASHTO SEISMIC Section 5.

If liquefaction is a design condition, the bridge shall be analyzed using both the static and liquefied soil conditions in accordance with AASHTO SEISMIC Section 6.8.

The LPile program may be used for pile and shaft supported foundations. However, the Liquefaction option and Liquefied Sand soil type in the LPILE program shall not be used.

B. Bridge Model Section Properties

In general, gross section properties may be assumed for all members, except concrete columns and other ductile reinforced concrete members. Seismic response analysis for deep foundations shall be based on a bracketed approach using a stiff substructure response and a soft substructure response.

1. Cracked Properties for Columns

Effective section properties shall be in accordance with the AASHTO SEISMIC Section 5.6.

2. Shaft Properties

The shaft concrete strength and construction methods lead to significant variation in shaft stiffness described as follows:

For a stiff substructure response:

1. Use 1.5 f'_c to calculate the modulus of elasticity.
2. Use I_g based on the actual shaft diameter.
3. When permanent casing is used, increase shaft I_g using the transformed area of the casing.

For a soft substructure response:

1. Use f'_c to calculate the modulus of elasticity.
2. Use I_g based on the actual shaft diameter. Alternatively, Ie may be used when it is reflective of the actual load effects in the shaft.
3. When permanent casing is used, increase shaft I_g using the transformed area of the casing.

3. Cast-in-Place Pile Properties

For a stiff substructure response:

1. Use 1.5 f'_c to calculate the modulus of elasticity.
2. Use the pile I_g plus the transformed casing moment of inertia.

For a soft substructure response:

1. Use 1.0 f'_c to calculate the modulus of elasticity.
2. Use pile I_g, neglecting casing properties.

C. Spread Footing Modeling Methods

The method for calculating footing springs is given in Section 7.2.7.

D. Deep Foundation Modeling Methods

The method used to model deep foundations shall conform to AASHTO SEISMIC Section 5.3.

1. Group Effects

The reduction factors for lateral resistance due to the interaction of deep foundation members is provided in AASHTO SEISMIC Section 8.12.2.5.

2. Shaft Caps and Pile Footings

In areas prone to scour or lateral spreading, the passive resistance of caps and pile-supported footings shall be neglected.

E. Design of Deep Foundations for Lateral Forces

1. Determination of Tip Elevations

A parametric study or analysis shall be performed to evaluate the sensitivity of the depth of the shaft or pile to the ground level displacement of the structure in order to determine the depth required for stable, proportionate lateral response of the structure.

2. Design for Lateral Loads

The structural design of shafts and piles shall consider the following conditions at the applicable limit state:

a. Static soil properties with both stiff and soft shaft or pile properties.

b. Dynamic or degraded soil properties with both stiff and soft shaft or pile properties.

c. Liquefied soil properties with both stiff and soft shaft or pile properties. When lateral spreading is possible, additional loading conditions will need to be analyzed.

d. Scour condition with stiff and soft shaft or pile properties.

15.7.3 Column Design

A. Shear Design

At Strength limit states, shear design shall follow the "Simplified Procedure for Nonprestressed Sections" in AASHTO LRFD Section 5.8.3.4.1.

B. Column Silos

Due to the construction and inspection complications of column silos, the Design-Builder shall attempt to meet balanced stiffness and frame geometry requirements by the other methods suggested in Section 4.1.4 of the AASHTO SEISMIC prior to use of column silos. Column silos shall meet the requirements of Section 7.3.8.

C. Longitudinal Reinforcement

The maximum reinforcement ratio shall be 0.04 in SDCs A, B, C and D. The minimum reinforcement ratio shall be 0.007 for SDC A, B, and C and shall be 0.01 for SDC D.

For bridges in SDC A, if oversized columns are used for architectural reasons, the minimum reinforcement ratio of the gross section may be reduced to 0.005, provided all loads can be carried on a reduced section with similar shape and the reinforcement ratio of the reduced section is equal to or greater than 0.01 and $0.133f'c/fy$. The column dimensions are to be reduced by the same ratio to obtain the similar shape.

The reinforcement shall be evenly distributed and symmetric within the column.

D. Longitudinal Reinforcement Splices

No splices are allowed when the required length of longitudinal reinforcement is less than the conventional mill length of 60-feet. Splicing of longitudinal reinforcement shall be outside the plastic hinge regions. But in SDC A, splices need only be located a minimum of 1.5 times the column diameter from the top and bottom of the column.

For bridges in SDC A and SDC B, no lap splices shall be used for #14 or #18 bars (such splices shall be mechanical splices conforming to *Standard Specifications* Section 6-02.3(24)C). Either lap or mechanical splices may be used for #11 bars and smaller. Lap splices shall be detailed as Class B splices. The spacing of transverse reinforcement over the length of a lap splice shall not exceed 4-inches or one-quarter of the minimum member dimension.

For bridges in SDC C and SDC D, bars shall be spliced using mechanical splices conforming to *Standard Specifications* Section 6-02.3(24)F. Splices shall be staggered. The distance between splices of adjacent bars shall be greater than the maximum of 20-bar diameters or 24-inches.

E. Longitudinal Reinforcement Development

1. Crossbeams

Development of longitudinal reinforcement shall be in accordance with AASHTO SEISMIC Section 8.8.4. Column longitudinal reinforcement shall be extended into crossbeams as close as practicably possible to the opposite face of the crossbeam.

2. Footings

Longitudinal reinforcement at the bottom of a column should extend into the footing and rest on the bottom mat of footing reinforcement with standard 90 degree hooks. In addition, development of longitudinal reinforcement shall be in accordance with AASHTO SEISMIC Section 8.8.4 and AASHTO LRFD Section 5.11.2.1.

3. Drilled Shafts

Embedment shall be specified using TRAC Report WA-RD 417.1 titled "Noncontact Lap Splices in Bridge Column-Shaft Connections". The requirements of the AASHTO SEISMIC Section 8.8.10 for development length of column bars extended into oversized pile shafts for SDC C and D shall not be used.

The modification factor in AASHTO LRFD Section 5.11.2.1.3 that allows l_d to be decreased by the ratio of (A_s required)/(A_s provided), shall not be used.

F. Transverse Reinforcement

1. General

All transverse reinforcement in columns shall be deformed. Columns in SDC A and B may use spirals, circular hoops, or rectangular hoops and crossties. Columns in SDC C and D shall use circular hoop reinforcement. However, rectangular hoops with ties may be used when large, odd shaped column sections are required.

2. Spiral Splices and Hoops

Welded laps shall be used for splicing and terminating spirals. Spirals or butt-welded hoops are required within plastic hinge regions. Splices shall be staggered. Also, where interlocking hoops are used in rectangular or non-circular columns, the splices shall be located in the column interior. Circular hoops for columns shall be shop fabricated using a manual direct butt weld or resistance butt weld. Field welded splices and termination welds of spirals of any size bar are not permitted in the plastic hinge region, including a zone extending 2'-0" into the connected member.

G. Reduced Column Section

Columns with overstrength force reducing details shall be designed in accordance with Section 7.3.7.

15.7.4 Crossbeam

Two-stage integral non-prestressed crossbeams shall be designed in accordance with Section 7.4.1.

15.7.5 Abutment Design and Details

A. General

1. Bent-Type Abutments

Abutments that include a bent cap supported on columns or extended piles or shafts shall not be used.

2. Abutments on Structural Earth (SE) Walls and Geosynthetic Walls

Bridge abutments may be supported on structural earth walls and geosynthetic walls. Abutments supported on these walls shall be designed in accordance with the requirements of this RFP and the following documents (listed in order of importance):

- WSDOT *Geotechnical Design Manual* Section 15.5.3.5
- AASHTO LRFD
- *Design and Construction of Mechanically Stabilized Earth Walls and Reinforced Soil Slopes*, Volume I and II, FHWA-NHI-10-024, FHWA-NHI-10-025

Walls directly supporting bridge abutment spread footings shall be 30 feet or less in total height, measured from the top of the fascia leveling pad to the bottom of the bridge abutment footing.

B. Embankment and Backfill

1. General Clearances

The minimum clearances for the embankment at the front face of abutments shall be as indicated on Standard Plans A-50.10.00 through A-50.40.00.

The minimum clearance between the bottom of the superstructure and the embankment below shall be 3'-0" for girder bridges and 5'-0" for non-girder, slab, and box girder bridges.

2. Abutments on SE Walls and Geosynthetic Walls

Clearances around bridge abutments shall be provided as shown in Figure 7.5.2-1. Concrete slope protection shall be provided.

3. Drainage and Backfill

3″ diameter weep holes shall be provided in all bridge abutment walls. These shall be located 6″ above the finish ground line at 12′ on center. In cases where the vertical distance between the top of the footing and the finish groundline is greater than 10′, additional weep holes shall be provided 6″ above the top of the footing.

Gravel backfill for walls shall be provided behind all bridge abutments. A 3′ width of gravel backfill shall be provided behind the cantilever wing walls. An underdrain pipe and gravel backfill for drain shall be provided behind all bridge abutments except abutments on fills with a stem wall height of 5′ or less.

C. Abutment Loading

1. Earthquake Load

EQ

For bearing pressure and abutment stability checks, the seismic inertial force of the abutment, P_{IR}, shall be combined with the seismic lateral earth pressure force, P_{AE}, as described in AASHTO LRFD Section 11.6.5.1. For structural design of the abutment, the seismic inertial force, P_{IR}, may be taken as 0.0.

For conventional footing supported abutments, the seismic horizontal acceleration coefficient, k_h, shall be taken as one half of the seismic horizontal acceleration coefficient assuming zero displacement, k_{h0}. The seismic active earth pressure shall be determined using the Mononobe-Okabe method, as described in AASHTO LRFD Appendix A11.

For pile- or shaft-supported abutments or other abutments that are not free to translate 1.0 inch to 2.0 inch during a seismic event, use a seismic horizontal acceleration coefficient, k_h, of 1.5 times the site-adjusted peak ground acceleration.

The seismic vertical acceleration coefficient, k_v, shall be taken as 0.0 for abutment design.

2. Bearing Forces

TU

For strength design, the bearing shear forces shall be based on ½ of the annual temperature range.

D. Abutment Details

1. Bearing Seats

The bearing seats shall have a minimum edge dimension of 3″ from the bearings shall and satisfy the requirements of AASHTO LRFD Section 4.7.4.4. On L abutments, the bearing seat shall be sloped away from the bearings to prevent ponding at the bearings.

2. Transverse Girder Stops

All superstructures shall be restrained against lateral displacement at the abutments and intermediate expansion piers. All prestressed girder bridges in Western Washington (within and west of the Cascade mountain range) shall have girder stops between all girders at abutments and intermediate expansion piers. Girder stops shall be full width between girder flanges except to accommodate bearing replacement requirements as specified in Chapter 9. Girder stops are designed using a shear strength resistance factor shall be $\phi_s = 0.9$.

3. Abutment Walls

When construction joints are located in the middle of the abutment wall, a pour strip or an architectural reveal should be used for a clean appearance. AASHTO LRFD Section 5.10.8 shall be followed for temperature and shrinkage reinforcement requirements near concrete surfaces exposed to daily temperature changes and in structural mass concrete. The minimum cross tie reinforcement in abutment walls shall be #4 tie bars with 135° hooks, spaced at approximately 2′-0″ center-to-center vertically and horizontally.

15.7.6 Abutment Wing Walls and Curtain Walls

Wall footing thickness shall not be less than 1'-6"

15.7.7 Footing Design

A. General Footing Criteria

See Figure 7.7.1-1 for footing cover requirements. Footings supported on SE walls or geosynthetic walls shall have a minimum of 6″ of cover.

B. Spread Footing Design

1. Foundation Design

a. Bearing Stress

The maximum effective width for calculating uniform bearing stress is limited to *C+2D* as shown in Figure 7.7.4-3.

2. Structural Design

a. Footing Thickness and Shear

The minimum footing thickness shall be 1′-0″. The minimum plan dimension shall be 4′-0″.

b. Vertical Reinforcement

Vertical reinforcement shall be developed into the footing to adequately transfer loads to the footing. Vertical rebar shall be bent 90° and extend to the top of the bottom mat of footing reinforcement. Bars in tension shall be developed using 1.25 L_d. Bars in compression shall develop a length of 1.25 L_d, prior to the bend. Where bars are not fully stressed, lengths may be reduced in proportion, but shall not be less than ¾ L_d.

c. Bottom Reinforcement

Reinforcement shall not be less than #6 bars at 12″ centers to account for uneven soil conditions and shrinkage stresses.

d. Top Reinforcement

Top reinforcement for footings designed for two-way action shall not be less than #6 bars at 12″ centers, in each direction while top reinforcement for bearing wall designed for one-way action shall not be less than #5 bars at 12″ centers in each direction.

C. Pile-Supported Footing Design

The minimum footing thickness shall be 2′-0″. The minimum plan dimension shall be 4′-0.

1. Pile Embedment, Clearance, and Rebar Mat Location

Cast-in-place concrete piles with reinforcing extending into footings are embedded a minimum of 6″. The clearance for the bottom mat of footing reinforcement shall be 1½″ between the reinforcing and the top of the pile for CIP pile footings. See Figure 7.7.5-2 for the minimum pile clearance to the edge of footing.

2. Concrete Design

In determining the proportion of pile load to be used for calculation of shear stress on the footing, any pile with its center 6″ or more outside the critical section shall be taken as fully acting on that section. Any pile with its center 6″ or more inside the critical section shall be taken as not acting for that section. For locations in between, the pile load acting shall be proportioned between these two extremes.

15.7.8 Shafts

A. Axial Resistance

The bridge plans shall include the end bearing and side friction nominal shaft resistance for the service, strength, and extreme event limit states in the General Notes, as shown in Figure 7.8-1-1.

1. Axial Resistance Group Reduction Factors

The group reduction factors for axial resistance of shafts for the strength and extreme event limit states shall be taken as shown in Table 7.8.1.1-1. These reduction factors presume that good shaft installation practices are used to minimize or eliminate the relaxation of the soil between shafts and caving. If this cannot be adequately controlled due to difficult soils conditions or for other constructability reasons, lower group reduction factors shall be used as recommended by the geotechnical engineer of record. These group reduction factors apply to both strength and extreme event limit states. For the service limit state the influence of the group on settlement as required in the AASHTO LRFD and the AASHTO SEISMIC are still applicable.

B. Structural Design and Detailing

1. Drilled shafts shall be designed for the lesser of the plastic forces or 1.2 times the elastic seismic forces of the column above in single column/single shaft foundations.
2. Concrete Class 5000P shall be specified for the entire length of the shaft for wet or dry conditions of placement.
3. When shafts are constructed in water, the concrete specified for the casing shoring seal shall be Class 4000W.
4. The assumed concrete compressive strength may be taken as $0.85f'_c$ for structural design of shafts. For seismic design, the expected compressive strength may be taken as 1.3 times this value in accordance with AASHTO Seismic Section 8.4.4.
5. The presence of permanent steel casing shall be taken into account in the shaft design (i.e. for stiffness, and etc.), but the structural capacity of permanent steel casing shall not be considered for structural design of drilled shafts unless the design conforms to Section 15.
6. Minimum cover requirements shall be as specified below:
   - Diameter less than or equal to 3′-0″ = 3″
   - Diameter greater than 3′-0″ and less than 5′-0″ = 4″
   - Diameter greater than or equal to 5′-0″ = 6″
7. The clear spacing between spirals and hoops shall not be less than 6″ or more than 9″. The clear spacing between spirals or hoops may be reduced in the splice zone in single column/single shaft connections if the concrete is vibrated.
8. The volumetric ratio and spacing requirements of the AASHTO SEISMIC for confinement need not be met.
9. #7 through #9 welded lap spliced hoops are acceptable to use provided they are not located in possible plastic hinge regions. Welded splices in hoops for shafts shall be completed prior to assembly of the shaft steel reinforcing cage. When hoops are used, the plans shall show a staggered splice pattern around the perimeter of the shaft so that no two adjacent splices are located at the same location.
10. In single column/single shaft configurations, the spacing of the shaft transverse reinforcement in the splice zone shall meet the requirements of the TRAC Report titled, "*Noncontact Lap Splices in Bridge Column-Shaft Connections*". The factor *k* represents the ratio of column tensile reinforcement to total column reinforcement at the nominal resistance. In the upper half of the splice zone, *k* shall be taken as 1.0. In the lower half of the splice zone, this ration could be determined from a column moment-curvature analysis.

11. Longitudinal reinforcement shall be provided for the full length of drilled shafts. The minimum longitudinal reinforcement in the splice zone of single column/single shaft connections shall be the larger of 0.75 percent A_g of the shaft or 1.0 percent A_g of the attached column. The minimum longitudinal reinforcement beyond the splice zone shall be 0.75 percent A_g of the shaft. The minimum longitudinal reinforcement in shafts without single column/ single shaft connections shall be 0.75 percent A_g of the shaft.
12. The clear spacing between longitudinal reinforcement shall not be less than 6″ or more than 9″. If a shaft design is unable to meet this minimum requirement, a larger diameter shaft shall be considered.
13. Mechanical splices in longitudinal bars shall be placed in low stress regions and staggered 2′-0″ minimum.
14. Where undersized permanent slip casing is used, provide a minimum of concrete cover of 3″ for shafts with a diameter of 4′-0″ and larger and 1½″ for shafts with a diameter less than 4′-0″.
15. Reinforcing bar centralizers shall be detailed in the plans as shown in Section 7.8.2-5.

15.7.9 Piles and Piling

A. Pile Types

Piles for new permanent bridges shall be CIP concrete piles.

B. Pile Groups

The minimum center-to-center spacing of piles shall be 30″ or 2.5 pile diameters.

C. Battered Piles

Battered piles shall not be used to resist lateral loads for permanent bridge foundations.

D. Structural Design and Detailing of CIP Concrete Piles

1. Concrete Class 5000P shall be specified for CIP concrete piles. The top 10′ of concrete in the pile shall be vibrated.
2. For structural design, the reinforcement alone shall be designed to resist the total moment throughout the length of pile without considering strength of the steel casing. The minimum reinforcement shall be 0.75 percent A_g for SDC B, C and D and shall be provided for the full length of the pile. Minimum clearance between longitudinal bars shall meet the requirements in Appendix 5.1-A2.
3. If the pile to footing/cap connection is not a plastic hinge zone longitudinal reinforcement need only extend above the pile into the footing/cap a distance equal to 1.0 l_d (tension). If the pile to footing/cap connection is a plastic hinge zone longitudinal reinforcement shall extend above the pile into the footing/cap a distance equal to 1.25 l_d.

4. Transverse spiral reinforcement shall be designed to resist the maximum shear in the pile. The minimum spiral shall be a #4 bar at 9″ pitch. If the pile to footing/cap connection is not a plastic hinge zone the volumetric requirements of AASHTO LRFD Section 5.13.4.6 need not be met.

E. Pile Splices

Concrete pile splices shall develop the full flexural and axial resistance of the pile.

F. Pile Resistance

The bridge plans shall include the Ultimate Bearing Capacity (Nominal Driving Resistance, R_{ndr}, for driven piles) in tons as shown in Figure 7.9.11-1.

15.7.10 Concrete-Filled Steel Tubes

A. Design Requirements

Concrete-filled steel tubes (CFST), reinforced concrete-filled steel tubes (RCFST) and their connections shall be designed in accordance with Section 7.10. The use of CFST and RCFST requires approval from the WSDOT Bridge Design Engineer when used as a ductile element as part of an earthquake-resisting system. Additionally, the plastic hinge modeling parameters and methods must be approved by the WSDOT Bridge Design Engineer.

15.8 Walls and Buried Structures

15.8.1 Retaining Walls

A. General

Design of retaining walls shall be based on the requirements and guidance cited herein and in the current AASHTO LRFD, AASHTO SEISMIC, AASHTO LRFD *Bridge Construction Specifications*, WSDOT General & Bridge Special Provisions and the *Standard Specifications* M 41-10 unless otherwise cited herein.

Retaining walls and their components that are in service for a maximum of 36 months are considered to be temporary. Temporary retaining walls need not be designed for the Extreme Event Limit States.

B. Loads

Retaining walls and their components shall be designed for all applicable loads defined in the current AASHTO LRFD Chapter 3.

The live load factor for Extreme Event-I Limit State load combination, γ_{eq} as specified in the AASHTO LRFD Table 3.4.1-1 for all permanent retaining walls shall be taken equal to 0.50.

C. Design of Reinforced Concrete Cantilever Retaining Walls

1. Standard Plan Reinforced Concrete Cantilever Retaining Walls

The standard plan reinforced concrete retaining walls have been designed in accordance with the requirements of the AASHTO LRFD, 4th Edition, 2007, and interims through 2008. See Section 8.1 for a complete list of the design criteria used for these walls. Details for construction and the maximum bearing pressure in the soil are given in the *Standard Plans* Section D.

2. NonStandard Reinforced Concrete Retaining Walls

Reinforced concrete retaining walls containing design parameters which exceed those used in the standard reinforced concrete retaining wall design are considered to be non-standard.

For additional design criteria, refer to Section 8.1.4B

D. Design of Cantilever Soldier Pile and Soldier Pile Tieback Walls

Typical soldier pile wall details are provided in the Appendix 8.1-A1.

1. Ground Anchors (Tiebacks)

Either the “tributary area method” or the “hinge method” as outlined in AASHTO LRFD Section C11.9.5.1 shall be considered acceptable design procedures to determine the horizontal anchor design force.

The recommended factored design load of the anchor, recommended anchor installation angles (typically 10° – 45°), no load zone dimensions, and any other special requirements for wall stability shall be as provided by the geotechnical investigation performed for the project by the geotechnical engineer of record, and the associated geotechnical report based on that investigation.

The minimum vertical anchor spacing shall be the same as defined in AASHTO LRFD Section 11.9.4.2 for the minimum horizontal anchor spacing.

The anchor lockoff load is 60 percent of the controlling factored design load for temporary and permanent walls (see *Geotechnical Design Manual* Chapter 15).

Permanent ground anchors shall have double corrosion protection consisting of an encapsulation-protected tendon bond length as specified in the WSDOT General Special Provisions. Typical permanent ground anchor details are provided in the Appendix 8.1-A1.

Temporary ground anchors may have either double corrosion protection consisting of an encapsulation-protected tendon bond length or simple corrosion protection consisting of grout-protected tendon bond length.

2. Design of Soldier Pile

Refer to Section 8.1.5B for design criteria

3. Design of Lagging

If construction operations are likely to occur above and behind the soldier pile wall alignment, the lagging shall be designed for an additional 250 psf surcharge due to temporary construction load.

a. Temporary Timber Lagging

Temporary lagging is as defined in the *Standard Specifications* Section 616.3(6). Temporary timber lagging shall be designed in accordance with *Standard Specifications* Section 616.3(6)B.

b. Permanent Lagging

Permanent lagging is as defined in the *Standard Specifications* Section 6.16.3(6). Permanent lagging shall be designed for 100 percent of the lateral load that could occur during the life of the wall in accordance with AASHTO LRFD Sections 11.8.5.2 and 11.8.6 for simple spans without soil arching.

Timber lagging shall be designed in accordance with AASHTO LRFD Section 8.6. The size effect factor (CF_b) shall be considered 1.0 unless a specific size is shown in the wall plans. The wet service factor (CM_b) shall be 0.85. The load applied to lagging shall be applied at the critical depth. Lagging size may be stepped over the height of the wall.

Timber lagging designed as a permanent structural element shall consist of treated Douglas FirLarch, grade No. 2 or better. Hemfir wood species, due to the inadequate durability in wet condition, shall not be used for permanent timber lagging.

4. Design of Fascia Panels

Refer to Section 8.1.5D for design criteria.

E. Design of Structural Earth Walls

1. Pre-approved Proprietary Structural Earth Walls

Structural earth (SE) wall systems meeting established WSDOT design and performance criteria have been listed as "preapproved" by the Bridge and Structures Office and the Materials Laboratory Geotechnical Branch. A list of current preapproved proprietary wall systems and their limitations is provided in the *Geotechnical Design Manual* Appendix 15D. For the SE wall shop drawing review procedure, see the *Geotechnical Design Manual* Chapter 15.

F. Design of Standard Plan Geosynthetic Walls

Details for construction are given in the *Standard Plans* Section D.

G. Design of Soil Nail Walls

Soil nail walls shall be designed in accordance with the FHWA Publication FHWA-NHI-14-007 "*Geotechnical Engineering Circular No. 7 Soil Nail Walls*". The seismic design parameters shall be determined in accordance with the most current edition of the AASHTO SEISMIC. Typical soil nail wall details are provided in Section 8.1.

H. Miscellaneous Items

Refer to Section 8.1.9 for design criteria.

I. Joints

Every joint in the wall shall provide for expansion. For cast-in-place construction a minimum of ½in premolded filler shall be specified in the joints. A compressible backup strip of closed cell polyethylene foam or butyl rubber with a sealant on the front face is used for precast concrete walls.

For cantilevered and gravity walls constructed without a traffic barrier attached to the top, expansion joint spacing shall be a maximum of 24 feet on centers. For cantilevered and gravity walls constructed with a traffic barrier attached to the top, expansion joint spacing shall be a maximum of 48 feet on centers or that determined for adequate distribution of the traffic collision loading.

For counterfort walls, expansion joint spacing shall be a maximum of 32 feet on centers.

For soldier pile and soldier pile tieback walls with concrete fascia panels, joint spacing shall be 24 – 32 feet on centers.

No joints other than construction joints shall be used in footings except at bridge abutments and where substructure changes such as spread footing to pile footing occur. In these cases, the footing shall be interrupted by a ½in premolded expansion joint through both the footing and the wall. The maximum spacing of construction joints in the footing shall be 120 feet. The footing construction joints should have a 6 inch minimum offset from the expansion joints in the wall.

15.8.2 Noise Barrier Walls

A. General

Design of noise barrier walls shall be based on the requirements and guidance cited herein and in the current AASHTO LRFD, AASHTO SEISMIC, AASHTO LRFD *Bridge Construction Specifications*, WSDOT General & Bridge Special Provisions and the *Standard Specifications* M 41-10 unless otherwise cited herein.

B. Loads

Noise barrier walls and their components shall be designed for all applicable loads defined in the current AASHTO LRFD Chapter 3.

Wind loads and on noise barriers shall be as specified in Chapter 3.

Seismic load shall be as follows:

$$\text{Seismic Dead Load} = A_s \times f \times D \tag{8.2-1}$$

In which:

$$A \times f \geq 0.10 \tag{8.2-2}$$

Where:

A_s = Peak seismic ground acceleration coefficient modified by short-period site factor

D = Dead load of the noise barrier and it's components

f = Dead load coefficient as specified in Table 8.2-1.

C. Design

1. Standard Plan Noise Barrier Walls

Standard plan noise barrier walls have been designed in accordance with the AASHTO *Guide Specifications for Structural Design of Sound Barriers*, 1989 and interims through 2002. The seismic design was based on a PGA of 0.35g which corresponds to a peak bedrock acceleration of 0.3g with an amplification factor of 1.18 for stiff soil. Details for construction of these walls are shown in the *Standard Plans* Section D.

The *Design Manual* Chapter 740 tabulates the design wind speeds and various exposure conditions used to determine the appropriate wall type.

The design parameters used in the standard plan noise wall foundation design are summarized in the *Geotechnical Design Manual* Chapter 17.

2. Non-Standard Noise Barrier Walls

Noise barrier walls containing design parameters which exceed those used in the standard noise barrier wall design are considered to be non-standard.

a. Noise Barrier Walls on Bridges and Retaining Walls

Refer to Section 8.2.3B1 for design criteria.

15.8.3 Buried Structures

A. General

In accordance with current WSDOT policy, only the cast-in-place reinforced concrete and precast concrete arch, box, and elliptical structures shall be used for buried highway and hydraulic structures with spans equal or greater than 20 feet (measured parallel to roadway centerline).

The term culvert used in this chapter and in the *Standard Specifications* M 41-10 applies to all buried hydraulic structures only. The term tunnel applies to all buried highway structures.

B. WSDOT Designed Standard Culverts

For WSDOT designed Standard Culverts the WSDOT Bridge and Structures Office has developed culvert standards for the Precast Reinforced Concrete Split Box Culvert (PRCSBC) and Precast Reinforced Concrete Three-Sided Structures (PRCTSS) with span lengths from 20' to 60'. See Section 8.4 for the list of Bridge Standard Drawings for Buried Structures containing the geometry table, typical sections and general details. See Appendix 8.3-B1 to 8.3-B3 for the Design Criteria used.

C. General Design Requirements

Design of buried structures shall be in accordance with the requirements and guidance cited herein and in the current AASHTO LRFD, AASHTO SEISMIC, *Special Provisions* and the *Standard Specifications* M 41-10.

All buried structures shall be designed for a minimum service life of 75 years.

The span length shall be the widest opening from interior face to interior face as measured along the centerline of the roadway.

All buried structures with span lengths greater than 20 feet shall be load rated in accordance with Section 13.

1. Application of Loads

Refer to Section 8.3.3.B

2. Buried Structure Wingwall and Headwall Design

Refer to Section 8.3.3.D

3. Buried Structure Seismic Design

Refer to Section 8.3.3.E

D. Design of Box Culverts

Box culverts shall be designed in accordance with *Standard Specifications* Section 7-02.3(6). Refer to Section 8.3.4 for additional design criteria specific to box culverts.

E. Design of Precast Reinforced Concrete Three-Sided Structures

Precast reinforced concrete three sided structures shall be designed and constructed in accordance with *Standard Specifications* Section 7-02.3(6). Precast reinforced concrete three sided structures are limited to spans of 26 feet or less. Refer to Section 8.3.5 for additional design criteria specific to precast reinforced concrete three sided structures.

F. Design of Detention Vaults

Design of completely enclosed buried detentions vaults shall not be permitted.

G. Design of Tunnels

Ventilation, safety access, fire suppression facilities, warning signs, lighting, emergency egress, drainage, operation, and maintenance are extremely critical issues associated with the design of tunnels and will require the expertise of geologists, tunnel experts, and mechanical engineers.

For motor vehicle fire protection, a standard has been produced by the National Fire Protection Association, NFPA 502 – *Standard for Road Tunnels, Bridges, and Other Limited Access Highways*. This document shall be used for all WSDOT tunnels. NFPA 502 – Standard for Road Tunnels, Bridges, and Other Limited Access Highways, uses tunnel length to dictate minimum fire protection requirements:

300 feet or less: no fire protection requirements
300 – 800 feet: minor fire protection requirements
800 feet or more: major fire protection requirements

15.9 Bearings and Expansion Joints

15.9.1 Expansion Joints

A. General Considerations

Bridges shall be designed to accommodate movements from all sources, including thermal fluctuations, concrete shrinkage, prestressing creep, and elastic post-tensioning shortening.

Where seismic isolation bearings are used, expansion joints shall be designed to accommodate seismic movements in order to allow the isolation bearings to function properly.

Expansion joints shall be designed to accommodate movement while minimizing imposition of secondary stresses in the structure. Expansion joint systems shall be sealed to prevent water, salt, and debris infiltration to substructure elements below. They shall also be designed to maximize durability while providing a relatively smooth riding surface.

Semi-integral construction shall be subject to the bridge length limitations stipulated below. In semi-integral construction, concrete end diaphragms are cast monolithically with the bridge deck. Girders are supported on elastomeric bearings, which are supported on a stub or cantilever abutment. Approach slab anchors, in conjunction with a compression seal, shall connect the monolithic end diaphragm to the bridge approach slab.

1. Concrete Bridges

Semi-integral construction shall be used for prestressed concrete girder bridges under 450 feet long and for post-tensioned spliced concrete girder and cast-in-place post-tensioned concrete box girder bridges under 400 feet long. Stub "L" and cantilever "L" type abutments with expansion joints at the bridge ends shall be used where bridge length exceeds these values.

2. Steel Bridges

"L" type abutments shall be used with expansion joints at the ends for multiple span bridges.

The use of intermediate expansion joints shall be avoided wherever possible.

For the purposes of this section, expansion joints are broadly classified into three categories based upon their total movement range as follows:

Small Movement Range Joints	Total Movement Range <= 1¾ inch
Medium Movement Range Joints	1¾ inch < Total Movement Range < 5 inch
Large Movement Range Joints	Total Movement Range >= 5 inch

B. General Design Criteria

Expansion joints and bearings shall be designed interdependently and in conjunction with the anticipated behavior of the overall structure.

Shrinkage and uniform thermal variation movements shall be calculated as follows:

1. Shrinkage Effects

The shrinkage strain used for sizing expansion joints that are installed 30 to 60 days following concrete deck placement shall be no less than 0.0002. This value shall be corrected for restraint conditions imposed by various superstructure types as follows:

$$\Delta_{shrink} = \beta \times \mu \times L_{trib} \quad (9.1.2\text{-}1)$$

Where:

L_{trib} = Tributary length of the structure subject to shrinkage

β = Ultimate shrinkage strain after expansion joint installation; estimated as 0.0002 in lieu of more refined calculations

μ = Restraint factor accounting for the restraining effect imposed by superstructure elements installed before the concrete slab is cast 0.0 for steel girders, 0.5 for precast prestressed concrete girders, 0.8 for concrete box girders and T-beams, 1.0 for concrete flat slabs

2. Thermal Effects

In lieu of the procedure described in AASHTO LRFD Article 3.12.1, uniform thermal movement range shall be calculated using the maximum and minimum anticipated bridge superstructure average temperatures noted below. For the purpose of combining load cases in accordance with AASHTO LRFD Article 3.4.1, the load factor used for uniform thermal (TU) displacements shall be taken as 1.0.

Concrete Bridges:	0°F to 100°F
Steel Bridges (eastern Washington)	-30°F to 120°F
Steel Bridges (western Washington)	0°F to 120°F

Total uniform thermal movement range shall be calculated as:

$$\Delta_{temp} = \alpha \times L_{trib} \times \delta T \quad (9.1.2\text{-}2)$$

Where:

L_{trib} = Tributary length of the structure subject to thermal variation

α = Coefficient of thermal expansion; 0.000006 in./in./°F for concrete and 0.0000065 in./in./°F for steel

δT Bridge superstructure average temperature range as a function of bridge type and location

In accordance with *Standard Specifications* M 41-10, contract drawings shall state dimensions at a normal temperature of 64°F unless specifically noted otherwise. Construction and fabrication activities at structure average temperatures other than 64°F require the Contractor or fabricator to adjust lengths of structural elements and concrete forms accordingly.

Strip seal and modular expansion joint systems are typically installed in preformed concrete blockouts after the bridge deck concrete has been cast. In these instances, concrete shall be placed in the blockout with the expansion joint device set at a gap that corresponds to the temperature of the already constructed bridge deck at the time concrete is placed in the blockout. In order to accomplish this, expansion device gap settings shall be specified on the contract drawings as a function of superstructure ambient average temperature. Generally, these settings shall be specified for temperatures of 40°F, 64°F, and 80°F.

C. Small Movement Range Joints

Elastomeric compression seals shall be used for all small movement range applications for new bridges. Elastomeric compression seals or poured silicone sealant may be used for rehabilitation of existing small movement range expansion joints and widenings.

1. Compression Seals

Compression seals shall be designed and installed to effectively seal a joint against all water and debris infiltration. Compression seals shall extend continuously across the full roadway width and up into traffic barriers. No field splices of compression seals are allowed.

Compression seals shall be installed against smooth, straight vertical concrete faces. Concrete surfaces may be either formed or sawcut. Polyester or elastomeric concrete nosing material shall be used for rehabilitation of existing compression seal joints in accordance with Section 9.1.3D below.

For design purposes, the minimum and maximum working widths of the seal shall be 40 percent and 85 percent of the uncompressed width. These measurements are taken perpendicular to the joint axis. Compressed seal width at the normal construction temperature of 64°F may be taken as 60 percent of the seal's uncompressed width. For skewed joints, bridge deck movements shall be separated into components perpendicular and parallel to the joint axis. Shear displacement of the seal over the full expected temperature range shall be limited to 22 percent of its uncompressed width.

2. Rapid-Cure Silicone Sealants

Rapid-cure silicone sealants may be installed against either concrete or steel. Concrete or steel substrate surfaces shall be thoroughly cleaned before the sealant is installed.

Rapid-cure silicone sealants shall be designed and installed based upon the manufacturer's recommendations.

3. Asphaltic Plug Joints

Asphaltic plug joints are not allowed.

4. Headers

Expansion joint headers for new construction shall be the same class structural concrete as used for the bridge deck and shall be cast integrally with the deck.

Expansion joint headers installed as part of a rehabilitative and/or overlay project shall be either polyester concrete or elastomeric concrete. Expansion joint headers shall be in accordance with General Special Provisions in the RFP Appendix.

Concrete headers shall be constructed on each side of an expansion joint when an HMA overlay is installed atop an existing concrete bridge deck.

For bridge overlays, modified concrete overlay (MCO) material may provide rigid side support for an elastomeric compression seal or a rapid cure silicone sealant bead without the need for separately constructed elastomeric concrete or polyester concrete headers. Such modified concrete overlay headers may utilize welded wire fabric as reinforcement.

D. Medium Movement Range Joints

1. Steel Sliding Plate Joints

Steel sliding plates shall be limited to the following specific applications:

i) sidewalks and crosswalks

ii) modular expansion joint upturns at traffic barriers

iii) bridge deck applications involving unusual movements (translation and large rotations) not readily accommodated by modular expansion joints.

All applications subject to pedestrian traffic shall meet ADA requirements and shall include a non-skid surface. Non-pedestrian traffic applications shall be galvanized or painted to provide corrosion resistance.

2. Strip Seal Joints

An elastomeric strip seal expansion joint shall consist of a preformed elastomeric gland mechanically locked into steel edge rails embedded into the concrete deck on each side of an expansion joint gap. Unfolding of the elastomeric seal accommodates movement. Edge rails shall be anchored to the concrete deck. The system shall be designed and detailed to accommodate the replacement of damaged or worn seals with minimal traffic disruption.

Either a standard anchorage or a special anchorage may be used for a strip seal expansion joint. The special anchorage incorporates steel reinforcement bar loops welded to intermittent steel plates, which in turn are welded to the steel shape. The special anchorage shall be used for very high traffic volumes or applications subject to snowplow hits. In applications highly susceptible to snowplow hits and concomitant damage, the intermittent steel plates shall be detailed to protrude ¼″ above the bridge deck surface to launch the snowplow blade and prevent it from catching on the forward extrusion.

The standard anchorage requires a minimum 7 inch deep block out. The special anchorage requires a minimum 9 inch deep block out.

3. Bolt-down Panel Joints

Bolt-down panel joints are not allowed.

On bridge overlay and expansion joint rehabilitation projects, existing bolt-down panel joints shall be replaced with rapid-cure silicone sealant joints or strip seal expansion joints.

E. Large Movement Range Joints

1. Steel Finger Joints

Steel finger joints may only be used where modular expansion joints are incapable of accommodating the movements or are otherwise not feasible. Elastomeric or metal troughs shall be installed beneath steel finger joints to catch and redirect runoff water.

The steel fingers shall be designed to support traffic loads with sufficient stiffness to preclude excessive vibration. In addition to longitudinal movement, finger joints shall accommodate rotation and differential vertical deflection across the joint. Finger joints shall be fabricated with a slight downward taper toward the ends of the fingers in order to minimize potential for snowplow blade damage.

2. Modular Expansion Joints

Modular expansion joints shall provide watertight wheel load transfer across expansion joint openings. Modular expansion joints are generally shipped in a completely assembled configuration. Modular expansion joints longer than 40 feet. may be shipped in segments to accommodate construction staging and/or shipping constraints.

a. Operational Characteristics

Modular expansion joints shall comprise a series of steel center beams oriented parallel to the expansion joint axis. Elastomeric strip seals or box-type seals shall attach to adjacent center beams, preventing infiltration of water and debris. The center beams shall be supported on support bars, which span in the primary direction of anticipated movement. The support bars shall be supported on sliding bearings mounted within support boxes. Polytetrafluoroethylene (PTFE) - stainless steel interfaces shall be used between elastomeric support bearings and support bars.

Modular expansion joint systems shall meet the fatigue resistance characterization requirements specified in the Special Provision for modular expansion joints at time of contract award.

Center beam field splices shall be carefully designed and constructed to mitigate fatigue susceptibility in accordance with the Special Provisions.

b. Movement Design

Modular expansion joints shall be sized to accommodate 115 percent of calculated total movement range. Contemporary modular expansion joints permit approximately 3 inches of service movement per elastomeric seal element. Extreme event movement ranges of up to 5 inch per elastomeric seal element are allowed provided that support bars and support boxes are sized and detailed to accommodate the larger cumulative movement without structurally damaging the modular expansion joint or detaching any elastomeric strip seal elements. To minimize impact and wear on bearing elements, the maximum gap between adjacent center beams shall be limited to 3½ inch.

To facilitate the installation of a modular joint at temperatures other than the 64°F normal temperature, the plans shall specify expansion gap distances face-to-face of edge beams as a function of the superstructure temperature at the time of installation.

c. Review of Shop Drawings and Structural Design Calculations

Modular expansion joints shall be designed, tested, fabricated, QA\QC inspected, and installed in accordance the General Special Provision in the RFP Appendix, including submittal of design calculations, fatigue testing results, weld procedures, and shop drawings.

The expansion joint system shall be designed to ensure complete concrete consolidation underneath all support boxes. A minimum vertical clearance of 2 inch shall be provided between the bottom of each support box and the top of the concrete block out. Alternatively, when vertical clearance is minimal, grout pads may be placed underneath support boxes before casting the concrete within the blockout.

d. Construction Considerations

Temperature adjustment devices shall be removed as soon as possible after concrete placement in the block out.

15.9.2 Bearings

A. General Considerations

Bearings and expansion joints shall be designed interdependently and in conjunction with the anticipated behavior of the overall structure.

B. Force Considerations

Bridge bearings shall be designed to transfer all anticipated loads from the superstructure to the substructure. Bearing design calculations shall be based upon the relevant load combinations and load factors stipulated in the AASHTO LRFD. Impact need not be applied to live load forces in the design of bearings.

C. Movement Considerations

The movement restrictions imposed by a bearing shall be compatible with the movements allowed by an adjacent expansion joint. Both bearings and expansion joints shall be designed consistent with the anticipated load and deformation behavior of the overall structure. Design rotations shall be calculated as follows:

1. Elastomeric and Fabric Pad Bearings

The maximum service limit state rotation for bearings that do not have the potential to achieve hard contact between metal components shall be taken as the sum of unfactored dead and live load rotations plus an allowance for fabrication and construction uncertainties of 0.005 radians.

2. HLMR Bearings

High-load multi-rotational (HLMR) bearings include spherical bearings, disc bearings, cylindrical bearings and pot bearings.

Both service and strength limit state rotations shall be used in the design of HLMR bearings. These rotations shall be shown on the plans to allow the manufacturer to properly design and detail a bearing.

Deformable elements such as polyether urethane discs and PTFE shall be designed for service limit state loads and rotations. The service limit state rotation shall include an allowance for uncertainties of ±0.005 radians.

The maximum strength limit state rotation shall be used to assure that potential hard contact (metal-to-metal or metal-to-concrete) is prevented. For disc bearings, the strength limit state rotation shall include an allowance of ±0.005 radians for uncertainties. For other HLMR bearings the strength limit state rotation shall include an allowance of ±0.005 radians for fabrication and installation tolerances and an additional allowance of ±0.005 radians for uncertainties in accordance with the AASHTO LRFD *Bridge Design Specifications*.

D. Detailing Considerations

HLMR bearings shall be designed, detailed, fabricated, and installed to facilitate inspection, maintenance, and eventual replacement. Jacking points shall be identified in the contract drawings so that bearings can be reset, repaired, or replaced.

Prestressed concrete girder bridges having end Type A (semi - integral) need not be detailed to accommodate elastomeric bearing replacement at abutments. Prestressed concrete girder bridges having end Type B (L-type abutments) shall be designed and detailed to accommodate elastomeric bearing replacement at abutments. Specifically, girder stops and end diaphragms shall be detailed to accommodate the placement of hydraulic jacks. The standard end diaphragms for long-span girders may not have sufficient flexural and shear capacity to support jacking induced stresses. Sufficient steel reinforcement shall be provided to accommodate shear forces and bending moments induced by jacking. (Girder end Types A and B are depicted Chapter 5) Intermediate piers of prestressed concrete girder bridges having steel reinforced elastomeric bearings shall also be designed and detailed to facilitate bearing replacement.

E. Bearing Types

1. Elastomeric Bearings

Steel reinforced elastomeric bearings shall be designed using the AASHTO LRFD Method B procedure. Shear modulus shall be specified on the plans as 165 psi at 73deg F without reference to durometer hardness.

Elastomeric bearings shall conform to the requirements of AASHTO M 251 - *Plain and Laminated Elastomeric Bridge Bearings*. Shims shall be fabricated from ASTM A 1011 Grade 36 steel unless noted otherwise on the plans. Bearings shall be laminated in ½ inch thick elastomeric layers with a minimum total thickness of 1 inch. For overall bearing heights less than 5 inches, a minimum of ¼ inch of side clearance shall be provided over the steel shims. For overall heights greater than 5 inches, a minimum of ½ inch of side clearance shall be provided. Live load compressive deflection shall be limited to 1/16 inch. Compressive dead load and live load shall be specified on the plans.

With respect to width, elastomeric bearings shall be designed and detailed as follows:

i. For prestressed concrete wide flange girders (WF36G to WF100G), the edge of the bearing pad shall be set between 1 inch minimum and 9 inch maximum inside of the edge of the girder bottom flange.

ii. For prestressed concrete I-girders, bulb-tee girders, and deck bulb-tee girders, the edge of the bearing pad shall be set 1 inch inside of the edge of the girder bottom flange.

iii. For all prestressed concrete tub girders, the edge of the bearing shall be set 1 inch inside of the edge of the bottom flange. Bearing pads for prestressed concrete tub girders shall be centered close to the centerline of each web.

iv. For all prestressed concrete slabs one bearing pad and corresponding grout pad is required for each end of the prestressed concrete slab. The centerline of the bearing and grout pad shall coincide with the centerline of the prestressed concrete slab. The need for steel shims shall be assessed during the bearing design.

In order to facilitate compressive load testing, future bearing replacement, and vertical geometry coordination, the following table shall be included in the Plans:

Bearing Design Table	
Service I Limit State	
Dead load reaction	--------- kips
Live load reaction (w/o impact)	--------- kips
Unloaded height	--------- inches
Loaded height (*DL*)	--------- inches
Shear modulus at 73º F	--------- psi

In the construction of precast prestressed concrete girder and steel girder bridges, elastomeric bearings need not be offset to account for temperature variation during erection of the girders. Girders may be set atop elastomeric bearings at temperatures other than the mean of the temperature range. This shall be statistically reconciled by assuming a maximum thermal movement in either direction of:

$$\Delta_{temp} = 0.75 \cdot \alpha \cdot L \cdot (T_{MaxDesign} - T_{MinDesign})$$

where $T_{MaxDesign}$ is the maximum anticipated bridge deck average temperature and $T_{MinDesign}$ is the minimum anticipated bridge deck average temperature during the life of the bridge.

For precast prestressed concrete girder bridges, the maximum thermal movement, Δ_{temp}, shall be added to shrinkage and long-term creep movements to determine total bearing height required. The shrinkage movement for this bridge type shall be half that calculated for a cast-in-place concrete bridge.

2. Fabric Pad Sliding Bearings

Fabric pad sliding bearings incorporate fabric pads with a polytetrafluoroethylene (PTFE) - stainless steel sliding interface to permit large translational movements.

Unfilled PTFE shall be used for fabric pad sliding bearings.

Unfilled PTFE shall be recessed half its depth into a steel backing plate, which shall be bonded to the top of a fabric pad. The stainless steel sheet shall be seal welded to a steel sole plate attached to the superstructure.

a. Fabric Pad Design

Maximum service load average bearing pressure for fabric pad bearing design shall be 1,200 psi. Maximum service load edge bearing pressure for fabric pad bearing design shall be 2,000 psi.

b. PTFE – Stainless Steel Sliding Surface Design

PTFE shall be at least 3⁄16 inch thick and recessed 3⁄32 inch into a minimum ½ inch thick steel plate that is bonded to the top of the fabric pad.

Stainless steel sheet shall be finished to a No. 8 (Mirror) finish and shall be seal welded to the sole plate.

3. Pin Bearings

Steel pin bearings may be used to support heavy reactions with moderate to high levels of rotation about a single predetermined axis.

4. Rocker and Roller Type Bearings

Rocker bearings and steel roller bearings are not allowed for new bridges.

5. Spherical Bearings

Woven PTFE shall be used on the curved surfaces of spherical bearings. When spherical bearings are detailed to accommodate translational movement, woven PTFE shall be used on the flat sliding surface also.

Spherical bearings shall be detailed with the concave surface oriented downward. Structural analysis of the overall structure shall recognize the center of rotation of the bearing not being coincident with the neutral axis of the girder above.

The contract drawings shall show the diameter and height of the spherical bearing in addition to all dead, live, and seismic loadings. Sole plate connections, base plate, anchor bolts, and any appurtenances for horizontal force transfer shall be detailed on the plans. The spherical bearing manufacturer shall submit shop drawings and detailed structural design calculations of spherical bearing components for review and comment by WSDOT.

6. Disc Bearings

Disc bearings composed of an annular shaped polyether urethane disk with a steel shear-resisting pin in the center may be used. A flat PTFE - stainless steel surface may be incorporated into the bearing to also provide translational movement capability.

7. Seismic Isolation Bearings

Seismic isolation bearings may be used, subject to the restrictions outlined in Sections 4.2.2 and 9.3.3.

F. Miscellaneous Details

1. Temporary Support before Grouting Masonry Plate

The masonry plate of an HLMR bearing shall be supported on a grout pad that is installed after the bearing and superstructure girders above have been erected. This sequence allows the Contractor to level and slightly adjust the horizontal location of the bearing before immobilizing it. Two methods for temporarily supporting the masonry plate are acceptable:

a. Shim Packs

Multiple stacks of steel shim plates may be placed atop the concrete surface to temporarily support the weight of the girders on their bearings before grouting.

b. Two-step Grouting with Cast Sleeves

A two-step grouting procedure with cast-in-place voided cores may be used for smaller HLMRs not generally subjected to uplift. Steel studs are welded to the underside of the masonry plate to coincide with the voided cores. With temporary shims installed between the top of the concrete surface and the underside of the masonry plate, the voided cores are fully grouted. Once the first stage grout has attained strength, the shims are removed, the masonry plate is dammed, and grout is placed between the top of the concrete surface and the underside of the masonry plate.

2. Anchor Bolts

Anchor bolts shall be designed to resist all horizontal shear forces and direct tension force due to uplift.

Anchor bolts shall be ASTM A 449 where strengths equal to ASTM A 325 are required and ASTM A 354, Grade BD, where strengths equal to ASTM A 490 are required. Anchor bolts shall be ASTM F 1554 bolts with supplemental Charpy test requirements in applications in which the bolts are subject to seismic loading.

G. Contract Drawing Representation

High load multi-rotational bearings shall be depicted schematically in the contract drawings. Each bearing manufacturer has unique fabricating methods and procedures that allow it to fabricate a bearing most economically. Depicting the bearings schematically with loads and geometric requirements provides each manufacturer the flexibility to innovatively achieve optimal economy.

H. Shop Drawing Review

High-load multi-rotational bearings shall be designed, tested, fabricated, QA\ QC inspected, and installed in accordance with the Special Provisions in the RFP Appendix, including submittal of design calculations and shop drawings.

I. Bearing Replacement Considerations

Bearings shall be designed and detailed to permit the replacement of all elements subject to wear. Superstructure and substructure elements shall be designed and detailed to accommodate lifting of the superstructure using hydraulic jacks to facilitate bearing element replacement.

For bearing replacements, the Design-Builder shall show anticipated lifting loads on the contract drawings. Limitations on lift height shall also be specified. Consideration shall be given to lift height as it relates to adjacent expansion joints elements and adjoining sections of railing. Restrictions on differential lift height between multiple jacks shall be specified to minimize stresses induced in adjacent structural elements.

Jacks shall be sized for 200 percent of the calculated lifting load.

15.10 Signs, Barriers, Bridge Approach Slabs, and Utilities

15.10.1 Sign and Luminaire Supports

A. Loads

1. General

The reference used in developing the following office criteria is the AASHTO *"*LRFD *for Structural Supports for Highway Signs, Luminaires, and Traffic Signals," First Edition Dated 2015, and shall be the basis for analysis and design*.

2. Design Life (Section 11.5, AASHTO 2015)

a. An Infinite life fatigue design will be used for luminaire supports, overhead sign structures, and traffic signal structures. The number of cycles a structure must withstand will be based on the ADTT of a 75 year design life with each truck inducing one cycle in accordance with AASHTO LRFD *Standard Specifications for Structural Supports for Highway Signs, Luminaires, and Traffic Signals First Edition*, dated 2015 including interims.

b. Roadside sign structures will use a 10 year design life.

3. Dead Loads

Sign (including panel and windbeams, does not include vert. bracing)	3.25 lbs/ft^2
Luminaire (effective projected area of head = 3.3 sq feet)	60 lbs/each
Fluorescent Lighting	3.0 lbs/ft
Standard Signal Head	60 lbs/each
Mercury Vapor Lighting	6.0 lbs/ft
Sign Brackets	Calc.
Structural Members	Calc.
5 foot wide maintenance walkway (including sign mounting brackets and handrail)	160 lbs
Signal Head w/3 lenses (effective projected area with backing plate = 9.2 sq feet)	60 lbs/each

4. Live Load

A live load consisting of a single load of 500 lb distributed over 2.0 feet transversely to the member shall be used for designing members for walkways and platforms. The load shall be applied at the most critical location where a worker or equipment could be placed, see 2015 AASHTO *Specifications* Section 3.6.

5. Wind Loads

A 3 second gust wind speed shall be used in the AASHTO wind pressure equation. The 3 second wind gust map in AASHTO is based on the wind map in ANSI/ASCE 7-10.

The basic wind speed of 115 mph shall be used in computing design wind pressure using Equation 3.8.1-1 of AASHTO Section 3.8.1. This is based on the high risk category with a mean recurrence intended of 1700 years per AASHTO Table 3.8-1.

The Alternate Method of Wind Pressures given in Appendix C of the AASHTO 2009 Specifications shall not be used.

6. Fatigue Design

Fatigue design shall conform to AASHTO Section 11 with the exception of tube shape. AASHTO does not provide fatigue calculations for tube shapes with less than 8 sides. Therefore in calculating the Constant Amplitude Fatigue Threshold, DT (Table 11.9.3.1-2, AASHTO 2015) was taken to be the larger outer flat to flat distance of the rectangular tube. Fatigue Categories are listed in Table 11.6-1. Overhead Cantilever and Bridge Sign & signal structures, high mast luminaires (HMLT), poles, and bridge mounted sign brackets shall conform to the following fatigue categories.

Fatigue Category I: Overhead cantilever sign structures (maximum span of 30 feet and no VMS installation), overhead sign bridge structures, high level (high mast) lighting poles 80 feet or taller in height, bridge-mounted sign brackets, and all signal bridges. Gantry or pole structures used to support sensitive electronic equipment (tolling, weigh-in-motion, transmitter/receiver antennas, transponders, etc.) shall be designed for Fatigue Category I, and shall also meet any deflection limitations imposed by the electronic equipment manufacturers.

Fatigue Category II: For structures not explicitly falling into Category I or III.

Fatigue Category III: Lighting poles 50 feet or less in height with rectangular, square or non-tapered round cross sections, and overhead cantilever traffic signals at intersections (maximum cantilever length 65 feet).

Sign bridges, cantilever sign structures, signal bridges, and overhead cantilever traffic signals mounted on bridges shall be either attached to substructure elements (e.g., crossbeam extensions) or to the bridge superstructure at pier locations. Mounting these features to bridges as described above will help to avoid resonance concerns between the bridge structure and the signing or signal structure.

The "XYZ" limitation shown in Table 10.1.4-2 shall be met for Monotube Cantilevers. The "XYZ" limitation consists of the product of the sign area (XY) and the arm from the centerline of the posts to the centerline of the sign (Z). See Appendix 10.1-A2-1 for details.

7. Ice and Snow Loads

A 3 psf ice load may be applied around all the surfaces of structural supports, horizontal members, and luminaires, but applied to only one face of sign panels (Section 3.7, AASHTO 2015).

Walk-through VMS shall not be installed in areas where appreciable snow loads may accumulate on top of the sign, unless positive steps are taken to prevent snow build-up.

8. Group Load Combinations

Sign, luminaire, and signal support structures are designed using the load factors from Table 10.1.1-1, AASHTO 2015.

B. Bridge Mounted Signs

1. Vertical Clearance

All new signs mounted on bridge structures shall be positioned such that the bottom of the sign or lighting bracket does not extend below the bottom of the bridge as shown in Figure 10.1.2-1.

Bridge mounted sign brackets shall be designed to account for the weight of added lights, and for the wind effects on the lights to ensure bracket adequacy if lighting is attached in the future.

2. Geometrics

a. Signs shall be installed at approximate right angles to approaching motorists. For structures above a tangent section of roadway, signs shall be designed to provide a sign skew within 5 degrees from perpendicular to the lower roadway (see Figure 10.1.2-2).

b. For structures located on or just beyond a horizontal curve of the lower roadway, signs shall be designed to provide a sign chord skew within 5 degrees from perpendicular to the chord-point determined by the approach speed (see Figure 10.1.2-3).

c. The top of the sign shall be level.

3. Aesthetics

a. The support structure shall not extend beyond the limits of the sign.

b. The sign support shall be detailed in such a manner that will permit the sign and lighting bracket to be installed level.

4. Sign Placement

a. Signs shall never be placed under bridge deck overhangs or directly under the dripline of the bridge.

b. A minimum of 2 inches of clearance shall be provided between back side of the sign support and edge of the bridge, see Figure 10.1.2-5.

5. Installation

a. Resin bonded anchors or cast-in-place ASTM F593 Group1, Condition A anchor rods shall be used to install the sign brackets on the structure. Size and minimum installation depth shall be given in the plans or specifications. The resin bonded anchors shall be installed normal to the concrete surface, and shall not be core drilled. Resin bonded anchors shall not be placed through the webs or flanges of prestressed or post-tensioned girders. Resin bonded anchors shall not be used at overhead locations other than with horizontal hole/anchor alignment.

b. Bridge mounted sign structures shall not be placed on bridges with steel superstructures.

6. Installing/Replacing Sign Panels on Existing Bridge Mounted Sign Brackets

When installing a new sign panel on an existing bridge mounted sign bracket, the installation shall conform to the following.

a. All hardware shall be replaced in accordance with *Standard Specifications* Section 9-28.11.

b. The area of the new sign panel shall not exceed the area of the originally designed sign panel.

c. The WSDOT inspection report for the bridge mounted sign bracket shall be reviewed to ensure the assembly is in good condition. If there is no inspection report, then an inspection shall be performed to establish the current condition of the assembly.

7. Material Specifications

a. Material specifications shall be as shown in Bridge Standard Drawings 10.1-A6-1.

b. All non-stainless steel parts shall be galvanized in accordance with AASHTO M111 after fabrication. Bolts and hardware shall be galvanized in accordance with AASHTO M232.

C. Monotube Sign Structures Mounted on Bridges

1. Design Loads

Design loads for the supports of the Sign Bridges shall be calculated based on assuming a 12 foot deep sign over the entire roadway width, under the sign bridge, regardless of the sign area initially placed on the sign bridge. For Cantilever design loads, guidelines specified in Section 10.1.1 shall be followed. The design loads shall follow the same criteria as described in Section 10.1.1. Loads from the sign bridge shall be included in the design of the supporting bridge.

In cases where a sign structure is mounted on a bridge, the sign structure, from the anchor bolt group and above, shall be designed to AASHTO *Standard Specifications for Structural Supports for Highway Signs, Luminaires, and Traffic Signals*, First Edition, dated 2015, including interims. The concrete around the anchor bolt group and the connecting elements to the bridge structure shall be designed to the specifications in this manual and AASHTO LRFD. Loads from the sign structure design code shall be taken as unfactored loads for use in AASHTO LRFD *Bridge Design Specifications*.

2. Vertical Clearance

Vertical clearance for Monotube Sign Structures shall be 20′-0″ minimum from the bottom of the lowest sign to the highest point in the traveled lanes. See Bridge Standard Drawings 10.1-A1-1, 10.1A2-1, and 10.1-A3-1 for sample locations of Minimum Vertical Clearances.

3. Geometrics

Sign structures shall be placed at approximate right angles to approaching motorists. Dimensions and details of sign structures are shown in the WSDOT Standard Plans G-60.10, G-60.20, G-60.30, G-70.10, G-70.20, G-70.30 and Bridge Standard Drawings 10.1-A1-1, 10.1-A1-2, and 10.1-A1-3 and 10.1-A1-1, 10.1-A1-2, and 10.1-A1-3. When maintenance walkways are included, refer to Standard Plans G-95.10, G-95.20, and G-95.30.

D. Monotube Sign Structures

1. Sign Bridge Conventional Design

Table 10.1.4-1 provides the conventional structural design information to be used for a Sign Bridge Layout, Bridge Standard Drawings 10.1-A1-1; along with the Structural Detail sheets, which are Bridge Standard Drawings 10.1-A1-1 and 10.1-A1-3; and General Notes, Bridge Standard Drawings 10.1-A5-1; and Miscellaneous Details, Appendix 10.1-A5-2. Sign bridge span lengths shall not exceed 180-feet.

2. Cantilever Conventional Design

Table 10.1.4-2 provides the conventional structural design information to be used for a Cantilever Layout, Bridge Standard Drawings 10.1-A2-1; along with the Structural Detail sheets, which are Bridge Standard Drawings 10.1-A2-2 and 10.1-A2-3; and General Notes, Appendix 10.1-A5-1; and Miscellaneous Details, Appendix 10.1-A5-2. Cantilever arm lengths shall not exceed 35-feet. Cantilever sign structures shall not be used to support VMS signs.

3. Balanced Cantilever Conventional Design

Bridge Standard Drawings 10.1-A3-1; along with the Structural Detail sheets, Bridge Standard Drawings 10.1-A3-2 and 10.1-A3-3, General Notes, Bridge Standard Drawings 10.1-A5-1; and Miscellaneous Details, Appendix 10.1-A5-2 provides the conventional structural design information to be used for a Balanced Cantilever Layout, Balanced Cantilevers are typically for VMS sign applications and shall have the sign dead load balanced with a maximum difference of one-third to two-thirds distribution.

4. Monotube Sheet Guidelines

The following guidelines apply when using the Monotube Sign Structure Bridge Standard Drawings 10.1-A1-1, 10.1-A1-2, and 10.1-A1-3; 10.1-A2-1, 10.1-A2-2, and 10.1-A2-3; 10.1-A3-1, 10.1-A3-2, and 10.1-A3-3; 10.1A4-1, 10.1A4-2, and 10.1A4-3; and 10.1-A5-1, 10.1-A5-2, and 10.1-A5-3.

Each sign structure shall be detailed to specify:

i. Sign structure base Elevation, Station, and Number.

ii. Type of Foundation 1, 2, or 3 shall be used for the Monotube Sign Structures, unless a non-conventional design is required. The average Lateral Bearing Pressure for each foundation shall be noted on the Foundation sheet(s).

iii. If applicable, label the Elevation View “Looking Back on Stationing”.

5. VMS Installation

a. VMS units shall not be installed on unbalanced cantilever structures.

b. VMS installation on Sign Bridge structures designed in accordance with AASHTO 2015 shall be installed in accordance with the following:

i. On spans 120 feet and greater up to two VMS units may be installed with a maximum weight of 4,000 lbs. each. Maintenance walkways may be installed between VMS units, but may not exceed 160 lbs/ft, or exceed 50 percent of the structure span length.

ii. On spans less than 120 feet up to three VMS units may be installed with a maximum weight of 4,000 lbs. each. Maintenance walkways may be installed between VMS units, but may not exceed 160 lbs/ft.

c. The number of VMS installed on Sign Bridge structures designed prior to AASHTO 2015 shall be reduced by one as defined in D.2-a and b.

E. Foundations

1. Monotube Sign Structure Foundation Types

The foundation type to be used shall be based on the geotechnical investigation performed and geotechnical report completed by the geotechnical engineer of record. Standard foundation designs for standard plan truss-type sign structures are provided in Standard Plans G-60.20, G-60.30, G-70.20, and G-70.30. Monotube sign structure foundations are Bridge Design Office conventional designs and shall be as described in the following paragraphs:

a. Foundation Type 1, is the preferred foundation type. A foundation Type 1 consists of a drilled shaft with its shaft cap. The design of the shaft depths shown in the Sign Bridge Standard Drawings are based on a lateral bearing pressure of 2,500 psf. The designer shall check these shaft depths using LRFD methodology. For Type 1 foundation details and shaft depths see Sign Bridge Standard Drawings 10.1-A4-1 and 10.1-A4-2. The Geotechnical report for Foundation Type 1 should include the soil friction angle, soil unit weight, allowable bearing pressure and temporary casing if required. Temporary casing shall be properly detailed in all Foundation Type 1 sheets if the Geotechnical Engineer requires them.

b. Foundation Type 2 is designed for a lateral bearing pressure of 2,500 psf. See Bridge Standard Drawing 10.1-A4-3 for Bridge Design Office conventional Foundation Type 2 design information. The designer shall check these shaft depths using LRFD methodology.

c. Foundation Type 3 replaces the foundation Type 2 for poor soil conditions where the lateral bearing pressure is between 2,500 psf and 1,500 psf. See Bridge Standard Drawing 10.1-A4-3 for Bridge Design Office conventional Foundation Type 3 design information. The designer shall check these shaft depths using LRFD methodology.

d. Barrier Shape Foundations are foundations that include a barrier shape cap on the top portion of Foundation Types 1, 2, and 3. Foundation details shall be modified to include Barrier Shape Cap details. See Bridge Standard Drawing 10.1-A5-1 details a single slope barrier.

2. Luminaire, Signal Standard, and Camera Pole Foundation Types

Luminaire foundation options are shown on WSDOT Standard Plan J-28.30. Signal Standard and Camera Pole foundation options are provided on WSDOT Standard Plans J-26.10 and J-29.10 respectively.

3. Foundation Design

Shaft type foundations constructed in soil for sign bridges, cantilever sign structures, luminaires, signal standards and strain poles shall be designed in accordance with the current edition of the AASHTO *LRFD Standard Specifications For Highway Signs, Luminaires, and Traffic Signals*; Section 13.16; Drilled Shafts.

No provisions for foundation torsional capacity are provided in Section 10.13 of the AASHTO *Standard Specifications for Highway Signs, Luminaires, and Traffic Signals*. The following approach can be used to calculate torsional capacity of sign structure, luminaire, and signal standard foundations:

Torsional Capacity, ΦT_n,

$$\Phi T_n = F*\tan\varphi D$$

Where:

F = Total force normal to shaft surface (kip)

D = Diameter of shaft (feet)

φ = Soil to foundation contact friction angle (degree), use smallest for variable soils

a. Monotube Sign Bridge and Cantilever Sign Structures Foundation Type 1 Design

The standard embedment depth "Z", shown in the table on Monotube Sign Structure Bridge Standard Drawing 10.1-A4-1, shall be used as a minimum embedment depth and shall be increased if the shaft is placed on a sloped surface, or if the allowable lateral bearing pressures are reduced from the standard 2500 psf. The standard depth assumed that the top 4 feet of the C.I.P. cap is not included in the lateral resistance (i.e., shaft depth "D" in the code mentioned above), but is included in the overturning length of the sign structure. The sign structure shaft foundation GSPs under Section 8-21 in the RFP Appendix shall apply for all Foundation Type 1 shafts.

b. Monotube Sign Structures Foundation Type 2 and 3

These foundation designs are Bridge Design Office convention and shall not be adjusted.

c. Monotube Sign Structures Non-Conventional Design Foundations

The geotechnical engineer of record shall identify any locations where the foundation types (1, 2, or 3) will not work. At these locations, the design forces are calculated, using the AASHTO *LRFD Standard Specifications for Structural Supports for Highway Signs, Luminaires, and traffic Signals*, and applied at the bottom of the structure base plate. These forces are then considered service loads and the non-conventional design foundation is designed with the appropriate Service, Strength, and

Extreme Load Combination Limit States and current design practices of the AASHTO LRFD and this manual. The anchor rod array shall be used from Tables 10.1.4-1 and 10.1.4-2 and shall be long enough to develop the rods into the confined concrete core of the foundation. The rod length and the reinforcement for concrete confinement, shown in the top four feet of the Foundation Type 1, shall be used as a minimum.

d. Signal Foundation Design

The traffic signal standard GSPs in the RFP Section 8-20 shall apply for foundations in substandard soils.

F. Truss Sign Bridges: Foundation Sheet Design Guidelines

If a Truss sign structure is used, refer to WSDOT *Standard Plans* for foundation details. There are four items that should be addressed when using the WSDOT *Standard Plans*, which are outlined below.

a. Determine conduit needs. If none exist, delete all references to conduit. If conduit is required, verify as to size and quantity.

b. Show sign bridge base elevation, number, dimension and station.

c. The concrete barrier transition section shall be in accordance with the *Standard Plans*.

d. The quantities shall be based on the *Standard Plans* details as needed.

15.10.2 Bridge Traffic Barriers

A. General Guidelines and Policy

The design criteria for traffic barriers on structures shall be in accordance with Chapter 13 of the AASHTO LRFD with the following supplemental guidelines.

WSDOT standard 42-inch high Single Slope concrete barrier shall be used for barriers on new bridges and bridge approach slabs. WSDOT standard 34-inch or 42-inch Single Slope concrete barrier shall be used for barriers on existing bridges, bridge rehabilitation projects, and retaining walls, including geosynthetic walls and structural earth walls.

Use of 32-inch or 42-inch F-Shape concrete barrier shall be limited for continuity off structure or within a corridor. Use of Pedestrian concrete barrier shall be limited for locations with sidewalk. Use of 42-inch or 54-inch combination barriers (32-inch or 34-inch concrete barrier increased in height by metal railing) may be used only if allowed by the RFP Criteria. See Chapter 10 Appendix for available WSDOT standard bridge barrier designs.

Barriers shall be designed for minimum Test Level 4 (TL-4) design criteria regardless of the barrier height. The Test Level shall be specified in the Plans.

A Test Level 5 (TL-5) barrier shall be used on new structures for “T” intersections, for barriers on structures with a radius of curvature less than 500 feet (TL-4 is acceptable for barrier on the inside of the curve), locations with Average Daily Truck Traffic (ADTT) greater than 10 percent, and locations with approach speeds at 50 mph or greater (e.g. freeway off-ramps).

See AASHTO LRFD Chapter 13 for additional Test Level selection criteria.

B. Design Criteria

1. Structural Capacity

AASHTO LRFD Appendix A13 shall be used to design barriers and their supporting elements (i.e. deck).

Concrete barriers shall be designed using yield line analysis as described in AASHTO LRFD Section A13.3.1.

Deck overhangs supporting concrete barriers shall be designed in accordance with AASHTO LRFD Section A13.4 as modified by Section 10.2.4.A.

2. Geometry

The traffic face geometry is part of the crash test and shall not be modified.

Concrete clear cover shall meet minimum concrete cover requirements and shall be increased to accommodate rustication grooves or patterns for architectural reasons. Concrete cover shall be increased to 2½″ for traffic face of barrier for slip form method of construction.

The 3″ toe dimension of the F-Shape barrier shall be increased to accommodate HMA overlays to a maximum of 6″.

For designing and detailing bridge decks with a superelevation of 8 percent or less, the exterior barrier and/or the median barrier shall be oriented perpendicular to the bridge deck. Bridge decks with a superelevation of more than 8 percent, the barrier on the low side of the bridge and/or median barrier shall be oriented perpendicular to an 8 percent superelevated bridge deck, and the barrier on the high side of the bridge shall be oriented perpendicular to the bridge deck.

3. Miscellaneous Design Information

Steel reinforcement bars S1 and S2 or S3 and S4 and W1 and W2 (or equivalent bars) from Chapter 10 Appendix barrier standard drawings shall be included in the Bar List.

Steel reinforcement bars S1, S3, AS1, AS3, and W1 (or equivalent bars) from Chapter 10 Appendix barrier standard drawings shall be epoxy coated.

Any modifications to Chapter 10 Appendix barrier standard drawings or to WSDOT *Standard Plans* shall not alter or compromise the structural integrity and/or crash test performance of barrier. Modifications shall be submitted for review and acceptance by WSDOT for concurrence with design policies.

15.10.3 At Grade Concrete Barriers

Differential grade concrete barriers with a grade difference greater than 4′-0″ shall be designed as reinforced concrete retaining walls with a traffic barrier at the top and a barrier shape at the cut face.

Differential grade concrete barriers with a grade difference 4′-0″ or less shall be designed in accordance to AASHTO LRFD barrier loading with the following guidelines.

Full depth expansion joints with shear dowels at the top shall be provided at 120′ maximum spacing.

Barrier shall be continuous or have shear connections between barrier sections if precast.

A. Differential Grade Concrete Barrier Design Criteria

1. Structural Capacity

The structural capacity of the differential grade concrete barrier shall be designed for the required Test Level (TL) vehicle impact design forces in accordance with AASHTO LRFD Chapters 5 and 13.

Any section along the differential grade concrete barrier shall not fail in shear, bending, or torsion when the barrier is subjected to the TL impact forces.

The torsion capacity of the differential grade concrete barrier shall be equal to or greater than the traffic barrier moment generated by the TL impact forces applied to the top of the barrier.

2. Global Stability

Global stability shall be in accordance with Section 10.3.1.A.

3. Geometry

The top of the differential grade concrete barrier shall have a minimum width of 6″ with a minimum 6″ clear distance to each side of luminaire or sign pole if mounted on top of the differential grade concrete traffic barrier. The transition flare rate shall follow the *Design Manual* M 22-01.

Barrier bottom shall be embedded a minimum 6″ below roadway. Roadway subgrade and ballast shall be extended below whole width of differential grade concrete barrier.

B. Traffic Barrier Moment Slab Design Criteria

1. Structural Capacity

The structural capacity of the traffic barrier moment slab shall be designed for the required TL impact forces in accordance with AASHTO LRFD Chapters 5 and 13.

Any section along the moment slab shall not fail in shear, bending, or torsion when the barrier is subjected to the TL impact forces.

The moment slab reinforcement shall be designed to resist forces developed at the base of the barrier. Moment slab supporting concrete barrier shall be designed in accordance to Deck Overhang Design in accordance with AASHTO LRFD Section A13.4 as modified by Section 10.2.4.A.

The torsion capacity of the moment slab shall be equal to or greater than the traffic barrier moment generated by the TL impact forces.

2. Global Stability

See Section 10.3.2.B.2.

3. Geometry

Moment slabs shall have a minimum width of 4.0 feet measured from the point of rotation to the heel of the slab and a minimum average depth of 0.83 feet.

4. Soil Reinforcement

Design of the soil reinforcement shall be in accordance with the *Geotechnical Design Manual* Chapter 15.

5. Wall Panel

The wall panels shall be designed to resist the dynamic pressure distributions as defined in the *Geotechnical Design Manual* Chapter 15.

The wall panel shall have sufficient structural capacity to resist the *maximum design rupture load for the wall reinforcement designed in accordance with the Geotechnical Design Manual* Chapter 15.

C. Precast Concrete Barrier

Concrete barrier Type 2 and Type 4 shall be used in accordance to Section 10.3.4.

15.10.4 Bridge Traffic Barrier Rehabilitation

A. General Guidelines and Policy

When identified in the RFP, deficient rails shall be improved or replaced within the limits of roadway resurfacing projects in accordance to Section 10.4.

Retrofit shall be an approved crash tested rail system or shall be designed to the strength requirements set forth by Section 2 of AASHTO *Standard Specifications for Highway Bridges*, 17th edition.

See Section 10.4.4 and WSDOT *Design Manual* for replacement criteria.

See Section 10.4.5 and 10.4.6 for available bridge rail retrofit and bridge rail replacement designs.

B. Design Criteria

1. Structural Capacity

A strength and geometric review shall be required for all bridge rail rehabilitation projects. The AASHTO LFD load of 10 kips shall be used in the retrofit of existing traffic barrier systems constructed prior to the year 2000.

If the strength of the existing bridge rail and their supporting elements (i.e. deck) are unable to resist a 10 kip barrier impact design load or has not been crash tested, then modifications or replacement will be required to improve its redirectional characteristics and strength.

If the design of the bridge rehabilitation includes other bridge components that will be designed using AASHTO LRFD then the following minimum equivalent Extreme Event (CT) traffic barrier loading can be used:

Flexure = (1.3)*(1.67)*(10 kip) / (0.9) = 24.10 kip

Shear = (1.3)*(1.67)*(10 kip) / (0.85) = 25.54 kip

2. Geometry

Standard thrie beam guardrail post spacing is 6′-3″ except for the SL-1 Weak Post, which is at 8′-4″. Post spacing can be increased up to 10′-0″ if the thrie beam guardrail is nested (doubled up).

Guardrail shall be continuous without gaps.

Design F guardrail end sections shall be used at the approach and trailing end of these gaps.

Standard Plan thrie beam guardrail transitions shall be used at each corner of the bridge.

Placement of the retrofit system will be determined from the WSDOT *Design Manual*.

15.10.5 Bridge Railing

A. General Guidelines and Policy

Pedestrian and bicycle/pedestrian railings shall be designed in accordance with AASHTO LRFD Chapter 13 with the following supplemental guidelines.

Railings shall be designed for vehicular impact load or be successfully crash tested unless location is low speed, location is outside of Design Clear Zone as defined in *Design Manual* Chapter 1600, or location has minimal safety consequence from collapse of railing.

Minimum height of 54″ shall be provided for bicycle railings on structures.

Fall Protection railing shall meet the requirements of WAC 296-155.

See Section 10.5.2 for available bridge railing designs.

15.10.6 Bridge Approach Slabs

Bridge approach slabs are required for all new and widened bridges.

Bridge runoff at the abutments shall be carried off and collected at least 10 feet beyond the bridge approach slab.

A. Bridge Approach Slab Design Criteria

The standard bridge approach slab design is based on the following criteria:

1. The bridge approach slab is designed as a slab in accordance with AASHTO LRFD. (Strength Limit State, IM = 1.33, no skew).
2. The support at the roadway end is assumed to be a uniform soil reaction with a bearing length that is approximately ⅓ the length of the approach slab, or 25′/3 = 8′.
3. The Effective Span Length (Seff), regardless of approach length, is assumed to be:
   25′ approach – 8′ = 17′.
4. Longitudinal reinforcing bars do not require modification for skewed approaches up to 30 degrees or for slab lengths greater than 25′.
5. The bridge approach slab is designed with a 2″ concrete cover to the bottom reinforcing.

B. Bridge Approach Slab Detailing

The minimum dimension from the bridge is 25′.

AS1 bars shall be epoxy coated. Bending diagrams shall be shown for all custom reinforcement. All Bridge Approach Slab sheets will have the AP2 and AP7 bars. If there is a traffic barrier, then AP8, AS1, and AS2 bars shall be shown.

C. Skewed Bridge Approach Slabs

For all skewed abutments, the roadway end of the bridge approach slab shall be normal to the roadway centerline. Skews greater than 20-degrees require analysis to verify the bottom mat reinforcement, and may require expansion joint modifications.

The roadway end of the approach may be stepped to reduce the size or to accommodate staging construction widths. At no point shall the roadway end of the approach slab be closer than 25′ to the bridge. These criteria apply to both new and existing bridge approach slabs. If stepped, the design shall provide the absolute minimum number of steps and the longitudinal construction joint shall be located on a lane line. See Figure 10.6.4-1 for clarification.

In addition, for bridges with traffic barriers and skews greater than 20 degrees, the AP8 bars shall be rotated in the acute corners of the bridge approach slabs. Typical placement is shown in the flared corner steel detail, see Figure 10.6.4-2.

D. Approach Anchors and Expansion Joints

For semi-integral abutments or stub abutments, the joint design shall be checked to ensure the available movement of the standard joint is not exceeded. For bridge approach slabs with barrier, the compression seal shall extend into the barrier.

L Type Abutments

Use a pinned connection in accordance with Section 10.6.5.

E. Bridge Approach Slab Addition or Retrofit to Existing Bridges

Bridge approach slabs on existing bridges shall be pinned to the existing pavement seat, or attached with approach anchors.

The pinning option is only allowed on semi-integral abutments as a bridge approach slab addition or retrofit to an existing bridge. Figure 10.6.6-1 shows the pinning detail. As this detail eliminates the expansion joint between the bridge approach slab and the bridge, the maximum bridge superstructure length is limited to 150′. Additionally, if the roadway end of the bridge approach slab is adjacent to PCCP roadway, then the detail shown in Figure 10.6.6-2 applies. PCCP does not allow for as much movement as HMA and a joint is required to reduce the possibility of buckling.

When pinning is not applicable, then the bridge approach slab shall be attached to the bridge with approach anchors. If the existing pavement seat is less than 10 inches, the seat shall be modified to provide an acceptable, wider pavement seat.

When a bridge approach slab is added to an existing bridge, the final grade of the bridge approach slab concrete shall match the existing grade of the concrete bridge deck, including bridges with asphalt pavement. The existing depth of asphalt on the bridge shall be shown in the Plans and an equal depth of asphalt placed on a new bridge approach slab. If the existing depth of asphalt is increased or decreased, the final grade shall also be shown on the Plans.

F. Bridge Approach Slab Staging

Ensure staging follows traffic control.

Add mechanical splice option as shown in Figure 10.6.6-3 when needed.

15.10.7 Traffic Barrier on Bridge Approach Slabs

A gap between the bridge approach slab and wingwall (or retaining wall) shall be shown in the details. The minimum gap is twice the long-term settlement, or 2 inches as shown in Figure 10.7-1.

When the traffic barrier is placed on the bridge approach slab,

- Barrier shall extend to the end of the bridge approach slab
- Conduit deflection or expansion fittings shall be called out at the joints
- Junction box locations shall start and end in the approach
- The transverse top reinforcing in the slab shall be sufficient to resist a traffic barrier impact load.

A. Bridge Approach Slab over Wing Walls, Cantilever Walls or Geosynthetic Walls

All walls that are cast-in-place below the bridge approach slab shall continue the barrier soffit line to grade as shown in Figure 10.7.1-1.

B. Bridge Approach Slab over SE Walls

The barrier soffit line shall match that for the SEW barrier starting at the bridge expansion joint as shown in Figures 10.7.2-1 and 10.7.2-2.

15.10.8 Utilities Installed with New Construction

A. General Concepts

The utilities included under this section are those described in *Standard Specifications* Section 6-01.10. Bridge plans shall include all hardware specifications and details for the utility attachment as described in the RFP.

1. Coating and Corrosion Protection

When the bridge is to receive pigmented sealer, any exposed utility lines and hangers shall be painted to match the bridge. When a pigmented sealer is not required, steel utility conduits and hangers shall be painted or galvanized for corrosion protection. The RFP Criteria shall specify cleaning and painting procedures.

B. Utility Design Criteria

All utilities shall be designed to resist Strength and Extreme Event Limits States. Utility support design calculations shall be stamped with a State of Washington Professional Engineer stamp, signed and dated.

Positive resistance to loads shall be provided in all directions perpendicular to and along the length of the utility as required by the utility engineer.

Dynamic fluid action due to loads shall be resisted off of the bridge.

Where utilities are insulated, the insulation system shall be designed to allow the intended motion range of the hardware supporting the utility.

Conduit shall be rigid.

1. Utility Location

Utilities shall be located, such that a failure will not result in damage to the bridge, the surrounding area, or be a hazard to traffic. The utility shall be installed between girders. Utilities and supports shall not extend below the bottom of the superstructure. Utilities shall be installed no lower than 1 foot 0 inches above the bottom of the girders. Utilities shall not be attached above the bridge deck nor attached to the railings or posts.

2. Termination at the Bridge Ends

Utility conduit and encasements shall extend 10 feet minimum beyond the ends of the structure. Utilities off the bridge shall be installed prior to paving of approaches.

3. Utility Expansion

The utilities shall be designed with a suitable expansion system as required to prevent longitudinal forces from being transferred to bridge members.

4. Utility Blockouts

Blockouts shall be provided in all structural members that prohibit the passage of utilities, such as girder end diaphragms, pier crossbeams, and intermediate diaphragms. These blockouts shall be large enough to fit deflection fittings, and shall be parallel to the utility. For multiple utilities, a note shall be added to the plans that the deflection fittings shall be staggered such that no fitting is located adjacent to another, or the blockouts shall be designed to fit both fittings. Expansion fittings shall be staggered.

5. Gas Lines or Volatile Fluids

Pipelines carrying volatile fluids through a bridge superstructure shall be designed in accordance with WAC 480-93, *Gas Companies—Safety, and Minimum Federal Safety Standard*, Title 49 Code of Federal Regulations (CFR) Section part 192. WAC 468-34-210, *Pipelines - Encasement*, describes when casing is required for carrying volatile fluids across structures.

6. Water Lines

Transverse support or bracing shall be provided for all water lines to carry Strength and Extreme Event Lateral Loading. In box girders (closed cell), a rupture of a water line will generally flood a cell before emergency response can shut down the water main. This shall be designed for as an Extreme Event II load case, where the weight of water is a dead load (DC). Additional weep holes or open grating, or full length casing extending 10-feet beyond the end of the bridge approach slab shall be used to offset this Extreme Event (see Figure 10.8.3-1).

7. Sewer Lines

Sewer lines shall meet the same design criteria as waterlines.

8. Electrical (Power and Communications)

Telephone, television cable, and power conduit shall be galvanized Rigid Metal Conduit (RGS) or Rigid Polyvinyl Chloride Conduit (PVC). Where such conduit is buried in concrete curbs or barriers or has continuous support, such support is considered to be adequate. Where hangers or brackets support conduit at intervals, the maximum distance between supports shall be in accordance with Section 10.8.6.

C. Box/Tub Girder Bridges

Utilities shall be located between girders or under the bridge deck soffit when the reinforced concrete box or tub girders are less than 4 feet inside clear height.

Continuous Support and Concrete Pedestals

Special utilities (such as water or gas mains) in box girder bridges shall use concrete pedestals. Continuous supports shall not be used.

D. Traffic Barrier Conduit

All new bridge construction shall install two 2-inch galvanized Rigid Metal Conduit (RGS) or Rigid Polyvinyl Chloride Conduit (PVC) in the traffic barriers. PVC conduit may be used only in stationary-form barriers, and will connect to RGS using a PVC adaptor when exiting the barrier. RGS conduit may be used in stationary-form barriers, but it shall be used in slipform barriers.

Each conduit shall be stubbed-out into its own concrete junction box at each corner of the bridge.

The galvanized steel conduit shall be wrapped with corrosion resistant tape at least one foot inside and outside of the concrete structure, and this requirement shall be so stated on the plans. The corrosion resistant tape shall be 3M Scotch 50, Bishop 5, Nashua AVI 10, or approved equal.

Pull boxes shall be provided at a maximum spacing of 180 feet. For fiber optics only, spacing shall not exceed 360 feet. The pull box size shall conform to the specifications of the National Electric Code or be a minimum of 8 inches by 8 inches by 18 inches to facilitate pulling of wires. Galvanized steel pull boxes (or junctions boxes) shall meet the specifications of the "NEMA Type 4X" standard for stationary-form barrier, shall meet the specifications of the "NEMA 3R"

and be adjustable in depth for slip form barrier, and the NEMA junction box type shall be stated on the plans. Stainless steel pull boxes may be used as an option to the galvanized steel.

In the case of existing bridges, an area 2 feet in width shall be reserved for conduit beginning at a point either 4 feet or 6 feet outside the face of usable shoulder.

E. Conduit Types

All electrical conduits shall be galvanized Rigid Metal Conduit (RGS) or Rigid Polyvinyl Chloride Conduit (PVC).

F. Utility Supports

All utility installations shall address temperature expansion in the design of the system or expansion devices.

Utility supports shall be designed so that any loads imposed by the utility installation do not overstress the conduit, supports, bridge structure, or bridge members.

Designs shall provide longitudinal and transverse support for loads from gravity, earthquakes, temperature, inertia, etc.

a. Pipe Hangers

Vertical supports shall be spaced at 5 foot maximum intervals for telephone and power conduits, and at a spacing to resist design loads for all other utilities. For heavy pipes over traffic (10″ water main or larger), a Safety Factor of 1.5 shall be used to resist vertical loads for Strength design.

The cast-in-place insert shall be at least 6″ long and hot dipped galvanized in accordance with AASHTO M 111 or AASHTO M 232.

The insert shall not interfere with reinforcement in the bridge deck. The inserts shall be installed level longitudinally and transversely.

Transverse supports shall, at a minimum, be located at every other vertical support. Bridge Standard Drawings 10.8-A1-1 and 10.8-A1-2 depict typical utility support installations and placement at abutments and diaphragms.

15.10.9 Utility Installation on Existing Bridges

Utility installation on existing bridges shall be in accordance with Section 10.9.

15.10.10 Resin Bonded Anchors

Fast set epoxy anchors shall not be used for resin bonded anchors.

For resin bonded anchors used in permanent sustained tension applications, the adhesive anchor systems shall be tested for long term sustained load performance in accordance with ACI 355.4.

Undercut anchors shall be stainless steel.

15.10.11 Drainage Design

All drainage system expansion joints shall be watertight.

1. **Geometrics**

   Bridges shall have a minimum transverse slope of .02′/feet and a minimum longitudinal slope of 0.5 percent.

2. **Hydrology**

   Hydrological calculations are made using the rational equation. A 10 year storm event with a 5 minute duration is the intensity used for all inlets except for sag vertical curves where a 50 year storm intensity is required.

3. **On Bridge Systems**

   Drains shall only be placed on bridge structures when required by bridge deck drainage hydraulics analysis and where alignment and superelevation geometry cannot be adjusted to compensate. The minimum pipe diameter shall be 6 inches with no bends greater than 45° within the system.

15.11 Detailing Practices

Structural detailing shall meet the requirements of this Chapter.

15.11.1 Standard Practices

A. Drawing Orientation and Layout Control

- Contract plans shall be printed, sealed, signed and submitted on 11″ × 17″ paper. Alternatively, the Contract plans may be submitted in an electronic format accepted by WSDOT encrypted with a valid electronic signature.
- Drawings shall be organized so the intent of the drawing is easily understood.

1. North arrow shall be placed on layouts and footing/foundation layouts.
2. Related details shall be grouped together in an orderly arrangement, lined up horizontally and vertically and drawn to the same scale.
3. The Plan view layout of structures shall be oriented from left to right in the direction of increasing state route mileposts. For layouts of existing bridges undergoing widening, expansion joint or thrie beam retrofit, or other structural modification, this orientation requirement may result in the bridge layout being opposite from what is shown in the original plans. In such cases, the bridge layout orientation and pier identification shall be laid out to be consistent with the WSDOT Bridge Preservation Office inspection records.
4. Except for the Layout, wall elevations are to show the exposed face regardless of direction of stationing. The Layout sheet stationing shall read increasing left to right. The elevation sheets shall represent the view in the field as the wall is being built.

B. Lettering

1. General

i. Lettering shall be upper case only, slanted at approximately 68 degrees. General text is to be approximately ⅛″ high.

ii. Text shall be oriented so as to be read from the bottom or right edge of the sheet.

iii. Detail titles shall be a similar font as general text, about twice as high and of a heavier weight. They shall be underlined with a single line having the same weight as the lettering.

iv. The True Type fonts “BridgeTech Italic” (BRIDT__.TTF, BRIDRG__.TTF) shall be used, exclusive of title blocks, and may be downloaded for use by the Design-Builder from the WSDOT Bridge and Structures web site.

2. Dimensioning

i. A dimension shall be shown once on a drawing. Duplication and unnecessary dimensions shall be avoided.

ii. All dimension figures shall be placed above the dimension line, so that they may be read from the bottom or the right edge of the sheet.

iii. When details or structural elements are complex, utilize two drawings, one for dimensions and the other for reinforcing bar details.

iv. Dimensions 12 inches or more shall be given in feet and inches unless the item dimensioned is conventionally designated in inches (for example, 16″ø pipe).

v. Dimensions that are less than one inch over an even foot, the fraction shall be preceded by a zero (for example, 3′-0¾″).

vi. Dimensions shall be placed outside the view, preferably to the right or below. However, in the interest of clarity and simplicity it may be necessary to place them otherwise.

C. Line Work

1. All line work shall be of sufficient size, weight, and clarity so that it can be easily read on a 11″ x 17″ sheet.
2. The line style used for a particular structural outline, centerline, etc., shall be kept consistent wherever that line is shown within a set of plans.
3. Line work shall have appropriate gradations of width to give line contrast. Care shall be taken that the thin lines are dense enough to show clearly when reproduced.
4. When drawing structural sections showing reinforcing steel, the outline of the sections shall be a heavier line weight than the reinforcement steel.
5. The order of line precedence (which of a pair of crossing lines is broken) shall be as follows:

   i. Dimension lines are never broken.

   ii. Leader line from a callout.

   iii. Extension line.

D. Scale

1. Plans shall be drawn using standard architectural or engineering scales. All details shall be accurately drawn to scale. Scales shall not be shown in the plans.
2. The minimum scale for a section detail with rebar shall be ⅜″ = 1′. The minimum scale to be used on steel details shall be ¾″ = 1′.

E. Graphic Symbols

Graphic symbols shall be in accordance with the following:

1. Structural steel shapes: See the *AISC Steel Construction Manual*.
2. Welding symbols: See the *Lincoln Welding Chart*.
3. Symbols for hatching different materials are shown on Appendix 11.1-A2.

F. Structural Sections, Views and Details

1. Whenever possible, sections and views shall be taken looking to the right, ahead on stationing, or down.
2. The orientation of a detail drawing shall be identical to that of the plan, elevation, etc., from which it is taken. Where there is a skew in the bridge any sections shall be taken from plan views.
3. The default view orientation is to be looking ahead on stationing. Other orientations shall be noted.
4. A circle divided into upper and lower halves shall identify structural sections, views, and details. Examples are shown in Appendix 11.1-A3.
5. Breaks in lines are allowable provided that their intent is clear.

G. Miscellaneous

1. Callout arrows shall come off either the beginning or end of the sentence. This means the top line of text for arrows coming off the left of the callout or the bottom line of text for arrows pointing right.

H. RFC Revisions

1. Changes made to Released For Construction (RFC) plan sheets shall be clouded with the exception of table entries which shall be shaded in accordance with the *Plans Preparation Manual* Appendix 5. Subsequent changes shall be clouded or shaded and the clouding and shading from previous changes shall be removed.
2. Changes shall be marked with a number in a circle in a triangle.
3. Changes shall be noted in the revision block at the bottom of the sheet using Lucida Console font 12pt.

I. Title Block

1. The project title shall be displayed in the plan sheet title block. The title consists of Line 1 specifying the highway route number(s), Line 2 and possibly Line 3 specifying the title verbiage. Bridge structures shall have a fourth line, in a smaller font, to specify the bridge name and number in accordance with the *Bridge List* M 23-09 and Sections 2.3.1.A and 2.3.2.A.
2. The highway route number(s) in Line 1 shall be consistent with WSDOT naming practice. Interstate routes (5, 82, 90, 182, 205, 405, and 705) shall be specified as I-(number). US routes (2, 12, 97, 97A, 101, 195, 197, 395, and 730) shall be specified as US (number). All other routes shall be specified as SR (number). Projects including two highway routes shall include both route numbers in Line 1, as in “US 2 And I-5”. Projects including three or more highway routes shall be specified with the lowest numbered route, followed by “Et Al”, as in “SR 14 Et Al”.

J. Reinforcement Detailing

1. Contract documents shall convey all necessary information for fabrication of reinforcing steel. In accordance with *Standard Specifications* Section 6-02.3(24), reinforcing steel details shown in the bar list shall be verifiable in the plans and other contract documents.
2. Size, spacing, orientation and location of reinforcement shall be shown on the plan sheets.
3. Reinforcement shall be identified by mark numbers inside a rectangle. Reinforcing bar marks shall be called out at least twice. The reinforcement including the spacing is called out in one view (such as a plan or elevation). The reinforcement without the spacing is called out again in at least one other view taken from a different angle (such as a section).
4. Epoxy coating for reinforcement shall be shown in the plans by noting an E inside a triangle.
5. The spacing for reinforcement shall be on a dimension line with extension lines. Do not point to a single bar and call out the spacing. Reinforcement spacing callouts shall include a distance. If the distance is an unusual number, give a maximum spacing. Do not use "equal spaces" as in "23 equal spaces = 18′-9″. Also, never use the word "about" as in 23 spaces @ about 10″ = 18′-9″. Instead these should read "23 spaces @ 10″ max. = 18′-9″.
6. Reinforcement geometry shall be clear in plan details. Congested areas, oddly bent bars, etc. can be clarified with additional views/details/sections or adjacent bending diagrams. In bending diagrams, reinforcement dimensions shall be given out-to-out. It may be necessary to show edges of reinforcement with two parallel edge lines to clearly show working points and dimensions.
7. Reinforcement lengths, angles, etc. need not be called out when they can be determined from structural member sizes, cover requirements, etc. Anchorage, embedment and extension lengths of reinforcement shall be dimensioned in the plans.
8. Standard hooks in accordance with AASHTO LRFD Section 5.10.2.1 need not be dimensioned or called out, but shall be drawn with the proper angle (90º, 135º or 180º). Seismic hooks per AASHTO LRFD Section 5.10.2.2 (used for transverse reinforcement in regions of expected plastic hinges) shall be called out on the plans whenever they are used.
9. The location, length and stagger of lap splices shall be shown on the plan sheets. Tables of applicable lap splice lengths are acceptable with associated stagger requirements. Type, location and stagger of mechanical and welded splices of reinforcement shall be shown.
10. Where concrete cover requirements differ from those given in the standard notes or *Standard Specifications* Section 6-02.3(24)C, they shall be shown in the plans. It shall be clear whether the cover requirement refers to ties and stirrups or the main longitudinal bars.

15.11.2 Bridge Office Standard Drawings and Office Examples

A. General

The Bridge and Structures Office provides standard drawings and example sheets of various common bridge elements.

B. Use of Standards

The standard drawings shall be considered as nothing more than examples of items like girders or traffic barriers which are often used and are very similar from job to job.

They shall be modified to fit the particular aspects of the structure. They are not intended to be included in a plan set without close scrutiny for applicability to the job.

15.11.3 Plan Sheets

Plan sheets shall be assembled in the order of construction and shall include the items listed below.

- Layout
- General Notes/Construction Sequence
- Footing/Foundation Layout
- Piles/Shafts
- Abutments
- Intermediate Piers/Bents
- Bearing Details
- Framing Plan
- Typical Section
- Girders/Diaphragms
- Bridge Deck Reinforcement (Plan and transverse section)
- Expansion Joints (if needed)
- Traffic Barrier
- Bridge Approach Slab

A. Layout

- The Layout sheet shall contain, but is not limited to:
  - Plan View with ascending stations from left to right
  - Elevation View shown as an outside view of the bridge and shall be visually aligned with the plan view.
- Alignment lines, vertical curves and roadway superelevation diagrams.
  - Test hole locations (designated by 3⁄16 inch circles, quartered) to plan view.
  - Elevation view of footings, seals, piles, etc. Show elevation at Bottom of footing and, if applicable, the type and size of piling.
  - General notes above legend on right hand side, usually in place of the typical section.

  - Title "LAYOUT" in the title block and sheet number in the space provided.
  - Other features, such as lighting, conduit, signs, excavation, riprap, etc. as determined by the designer.

B. General Notes/Construction Sequence

C. Footing Layout

- An abutment with a spread footing has a Footing Layout. An abutment with piles and pile cap has a Foundation Layout.
- The Footing Layout is a plan of the bridge whose details are limited to those needed to locate the footings. The intent of the footing layout is to minimize the possibility of error at this initial stage of construction.
- The Foundation Layout is a plan of the bridge whose details are limited to those needed to locate the shafts or piles. The intent of the Foundation layout is to minimize the possibility of error at this initial stage of construction.
- Other related information and/or details such as pedestal sizes, and column sizes are considered part of the pier drawing and should not be included in the footing layout.
- The Footing Layout should be shown on the layout sheet if space allows. It need not be in the same scale. When the general notes and footing layout cannot be included on the first (layout) sheet, the footing layout should be included on the second sheet.
- Longitudinally, footings should be located using the survey line to reference such items as the footing, centerline pier, centerline column, or centerline bearing, etc.
- When seals are required, their locations and sizes should be clearly indicated on the footing layout.
- The Wall Foundation Plan for retaining walls is similar to the Footing Plan for bridges except that it also shows dimensions to the front face of wall.
- Appendix 11.1-A4 is an example of a footing layout showing:
  - The basic information needed.
  - The method of detailing from the survey line.

D. Piles/Shafts

E. Abutment

- Bridge elements that have not yet been built will not be shown. For example, the superstructure is not to be shown, dashed or not, on any substructure details.
- Elevation information for seals and piles or shafts may be shown on the abutment or pier sheets.
- Views are to be oriented so that they represent what the contractor or inspector would most likely see on the ground. Pier 1 elevation is often shown looking back on stationing. A note should be added under the Elevation Pier 1 title saying "Shown looking back on stationing".

F. Intermediate Piers/Bents

- Each pier shall be detailed separately as a general rule. If the intermediate piers are identical except for height, then they can be shown together.

F. Bearing Details

G. Framing Plan

- Girder Lines must be identified in the plan view (Gir. A, Gir. B, etc.).

H. Typical Section

- Girder spacing, which is tied to the bridge construction baseline
- Bridge deck thickness, as well as web and bottom slab thicknesses for box girders
- "A" dimension
- Limits of pigmented sealer
- Profile grade and pivot point and cross slopes
- Utility locations
- Curb to curb roadway width
- Soffit and drip groove geometry

I. Girders/Diaphragms

- Prestressed girder sheets can be copied from the Bridge and Structures Office library but they shall be modified to match the project requirements.

J. Bridge Deck Reinforcement

- Plan and transverse section views

K. Expansion Joints

L. Traffic Barrier

- Traffic barrier sheets can be copied from the *Standard Plans* but they must be modified to match the project requirements.

M. Bridge Approach Slab

- Approach slab sheets can be copied from the *Standard Plans* and modified as necessary for the project.

N. Barlist

- The barlist sheets do not require stamping because they are not officially part of the contract plan set.

15.11.5 Structural Steel

A. General

Flat pieces of steel are termed plates, bars, sheets or strips, depending on the dimensions.

B. Bars

Up to 6 inches wide, 0.203 inch (3⁄16 inch) and over in thickness, or 6 inches to 8 inches wide, 0.230 inch (7⁄32 inch) and over in thickness.

C. Plates

Over 8 inches wide, 0.230 inch (7⁄32 inch) and over in thickness, or over 48 inches wide, 0.180 in (11⁄64 inch) and over in thickness.

D. Strips

Thinner pieces up to 12 inches wide are strips and over 12 inches are sheets. A complete table of classification may be found in the AISC *Manual of Steel Construction*, 8th Ed. Page 6-3.

E. Labeling

The following table shows the usual method of labeling some of the most frequently used structural steel shapes. Note that the inches symbol (″) is omitted, but the foot symbol (′) is used for length including lengths less than a foot.

PLATES	PL	½	x	34	x	5'-6	ANGLES	L	6	x	5	x	¾	x	2'-1
	GROUP SYMBOL	THICKNESS IN INCHES		WIDTH IN INCHES		LENGTH IN FEET AND INCHES		GROUP SYMBOL	LONG LEG IN INCHES		SHORT LEG IN INCHES		THICKNESS IN INCHES		LENGTH IN FEET AND INCHES
FLAT BARS	BAR	2	x	¾	x	0'-6	RECTANGULAR HSS	HSS	6	x	5	x	¼	x	3'-2
	GROUP SYMBOL	WIDTH IN INCHES		THICKNESS IN INCHES		LENGTH IN FEET AND INCHES		GROUP SYMBOL	WIDTH IN INCHES		WIDTH IN INCHES		WALL THICKNESS IN INCHES		LENGTH IN FEET AND INCHES
SQUARE BARS	BAR	2	⧄	x	3'-4	CIRCULAR HSS	HSS	3.000	x	0.250	x	2'-5			
	GROUP SYMBOL	SIZE IN INCHES	CONVENTION FOR "SQUARE"		LENGTH IN FEET AND INCHES			GROUP SYMBOL	OUTSIDE DIAM. IN INCHES		WALL THICKNESS IN INCHES		LENGTH IN FEET AND INCHES		
ROUND BARS	BAR	2	Ø	x	0'-4	PIPES	1½"Ø	STD	PIPE						
	GROUP SYMBOL	SIZE IN INCHES	CONVENTION FOR "ROUND"		LENGTH IN FEET AND INCHES		NOMINAL DIAM. IN INCHES	DESIGNATION	GROUP SYMBOL						

15.11.6 Aluminum Section Designations

The designations used in the tables are suggested for general use.

Section	Designation	Example
I-Beams	I *DEPTH* × *WT*	14 × 3.28
Wide-Flange Sections	WF *DEPTH* × *WT*	WF4 × 4.76
Wide-Flange Sections, Army-Navy Series	WF(A-N) *DEPTH* × *WT*	WF(A-N)4 × 1.79
American Standard Channels	C *DEPTH* × *WT*	C4 × 1.85
Special Channels	CS *DEPTH* × *WT*	CS4 × 3.32
Wing Channels	CS(WING) *WIDTH* × *WT*	CS(WING)4 × 0.90
Army-Navy Channels	C(A-N) *DEPTH* × *WT*	C(A-N)4 × 1.58
Angles	L *LL* × *LL* × *TH*	L3 × 3 × 0.25
Square End Angles	LS *LL* × *LL* × *TH*	LS2 × 2 × 0.187
Bulb Angles	BULB L *LL1* × *LL2* × *TH1* × *TH2*	BULB L4 × 3.5 × 0.375 × 0.375
Bulb Angle, Army-Navy Series	BULB L(A-N) *LL1* × *LL2* × *TH1* × *TH2*	BULB L(A-N) 3 × 2 × 0.188 × 0.188
Tees	T *DEPTH* × *WIDTH* × *WT*	T4 × 4 × 3.43
Army-Navy Tees	T(A-N) *DEPTH* × *WIDTH* × *WT*	T(A-N)4 × 4 × 2.27
Zees	Z *DEPTH* × *WIDTH* × *WT*	Z4 × 3.06 × 2.85
Plates	PL *TH* × *WIDTH*	PL¼ × 8
Rods	RD *DIA*	RD 1
Square Bars	SQ *SDIM*	SQ 4
Rectangle Bars	RECT *TH* × *WIDTH*	RECT¼ × 4
Round Tubes	*ODIA OD* × *TH* WALL	4OD × 0.125 WALL
Square Tubes	*ODIM SQ* × *TH* WALL	3SQ × 0.219 WALL
Rectangle Tubes	*DEPTH* × *WIDTH RECT* × *TH WALL*	4 × 1.5 RECT × 0.104 WALL
WT - WEIGHT in LB/FT based on density of 0.098 TH - THICKNESS, LL - LEG LENGTH, DIA – DIAMETER ODIA - OUTSIDE DIAMETER, ODIM - OUTSIDE DIMENSION SDIM - SIDE DIMENSION All lengths are in inches		

15.11.7 Abbreviations

Abbreviations shall be defined in the contract documents.

15.12 Bridge Load Rating

15.12.1 General

Load ratings shall be completed for all new, widened, or rehabilitated bridges where the rehabilitation alters the load carrying capacity of the structure. Load ratings shall be done immediately after the design is completed and rating calculations shall be filed separately in accordance with Section 13.4 and files shall be forwarded to WSDOT's Load Rating Engineer. A final stamped and signed load rating shall be provided at least 90-days prior to opening any bridge requiring load rating to traffic. Final approval of the load rating of a bridge shall rest with WSDOT's Load Rating Engineer.

New bridges shall be rated based on the Load and Resistance Factor Rating (LRFR) method in accordance with the AASHTO *Manual For Bridge Evaluation* (MBE), Chapter 13 of this manual and this chapter. NBI ratings shall be based on the HL-93 truck and shall be reported as a rating factor.

15.12.2 Load Rating Software

For prestressed concrete girder bridges and X-Beams, use BridgeLink to load rate structural elements. For all other cases where BridgeLink cannot be used, such as but not limited to, or steel structures or segmental boxes, CSiBridge shall be used. Obtain WSDOT's Load Rating Engineer's approval for the use of any other software prior to commencing any work.

For more complex structures such as steel curved girders and arches, different software may be used to analyze the loads after obtaining approval from WSDOT's Load Rating Engineer. Acceptable software currently includes CSiBridge.

Loads and capacities shall be tabulated in a manner that will make it simple for WSDOT to manipulate the data in the future. Method of tabulation shall be approved by WSDOT's Load Rating Engineer prior to commencing any work. Microsoft Excel shall be used for tabulation, and all cells in the spreadsheets shall be unlocked and any hidden code or functions shall be explained thoroughly in the report. Hand calculations shall be provided to verify all spreadsheets.

15.99 References

AASHTO LRFD *Bridge Design Specifications*, Latest Edition and Interims. American Association of State Highway and Transportation Officials (AASHTO), Washington, D.C.

AASHTO *Guide Specifications for LRFD Seismic Bridge Design* (SEISMIC), Latest Edition and Interims. American Association of State Highway and Transportation Officials (AASHTO), Washington, D.C.

AASHTO *Standard Specifications for Highway Bridges*, 17th edition

AASHTO *Manual for Bridge Evaluation*

ACI 355.4-11 (2014) *"Qualification of Post-Installed Adhesive Anchors in Concrete and Commentary,"* American Concrete Institute, Farmington Hills, MI.

WSDOT *Bridge Inspection Manual* M 36-64

WSDOT *Geotechnical Design Manual* M 46-03

WSDOT *Design Manual* M 22-01

WSDOT *Construction Manual* M 41-01

WSDOT *Local Agency Guidelines* M 36-63

WSDOT *Standard Specifications for Road, Bridge, and Municipal Construction* (*Standard Specifications*) M 41-10

WSDOT *Standard Plans* M 21.01

WSDOT *Hydraulics Manual* M 23-03

Washington Utilities and Transportation Commission *Clearance Rules and Regulations Governing Common Carrier Railroads*

American Railway Engineering and Maintenance Association (AREMA) *Manual for Railroad Engineering*. Note: This manual is used as the basic design and geometric criteria by all railroads. Use these criteria unless superseded by FHWA or WSDOT criteria.

The Union Pacific Railroad *"Guidelines for Design of Highway Separation Structures over Railroad (Overhead Grade Separation)"*

This page intentionally left blank.