Washington State
Department of Transportation

TECHNICAL MANUAL

Bridge Design Manual (LRFD)

M 23-50.06

July 2011

Bridge and Structures Office
Engineering and Regional Operations

Americans with Disabilities Act (ADA) Information

Materials can be provided in alternative formats by calling the ADA Compliance Manager at 360-705-7097. Persons who are deaf or hard of hearing may contact that number via the Washington Relay Service at 7-1-1.

Title VI Notice to the Public

It is Washington State Department of Transportation (WSDOT) policy to ensure no person shall, on the grounds of race, color, national origin, or sex, as provided by Title VI of the Civil Rights Act of 1964, be excluded from participation in, be denied the benefits of, or be otherwise discriminated against under any of its federally funded programs and activities. Any person who believes his/her Title VI protection has been violated may file a complaint with WSDOT's Office of Equal Opportunity (OEO). For Title VI complaint forms and advice, please contact OEO's Title VI Coordinator at 360-705-7098 or 509-324-6018.

To get the latest information on WSDOT publications, sign up for individual e-mail updates at: www.wsdot.wa.gov/publications/manuals

Foreword

This manual has been prepared to provide Washington State Department of Transportation (WSDOT) bridge design engineers with a guide to the design criteria, analysis methods, and detailing procedures for the preparation of highway bridge and structure construction plans, specifications, and estimates.

It is not intended to be a textbook on structural engineering. It is a guide to acceptable WSDOT practice. This manual does not cover all conceivable problems that may arise, but is intended to be sufficiently comprehensive to, along with sound engineering judgment, provide a safe guide for bridge engineering.

A thorough knowledge of the contents of this manual is essential for a high degree of efficiency in the engineering of WSDOT highway structures.

This loose leaf form of this manual facilitates modifications and additions. New provisions and revisions will be issued from time to time to keep this guide current. Suggestions for improvement and updating the manual are always welcome.

All manual modifications must be approved by the Bridge Design Engineer.

The electronic version of this document is available at:
www.wsdot.wa.gov/Publications/Manuals/M23-50.htm

/s/ Jugesh Kapur

Jugesh Kapur, P.E., S.E.
Bridge and Structures Engineer
Washington State Department of Transportation

Chapter 1 General Information

1.1 Manual Description . . . 1.1-1
1.1.1 Purpose . . . 1.1-1
1.1.2 Specifications . . . 1.1-1
1.1.3 Format . . . 1.1-1
1.1.4 Revisions . . . 1.1-3

1.2 Bridge and Structures Office Organization . . . 1.2-1
1.2.1 General . . . 1.2-1
1.2.2 Organizational Elements of the Bridge Office . . . 1.2-1
1.2.3 Design Unit Responsibilities and Expertise . . . 1.2-4

1.3 Quality Control/Quality Assurance (QC/QA) Procedure . . . 1.3-1
1.3.1 General . . . 1.3-1
1.3.2 Design/Check Procedures . . . 1.3-2
1.3.3 Design/Check Calculation File . . . 1.3-10
1.3.4 PS&E Review Period . . . 1.3-11
1.3.5 Addenda . . . 1.3-11
1.3.6 Shop Plans and Permanent Structure Construction Procedures . . . 1.3-11
1.3.7 Contract Plan Changes (Change Orders and As-Builts) . . . 1.3-14
1.3.8 Archiving Design Calculations, Design Files, and S&E Files . . . 1.3-15
1.3.9 Public Disclosure Policy Regarding Bridge Plans . . . 1.3-16
1.3.10 Use of Computer Software . . . 1.3-17

1.4 Coordination With Other Divisions and Agencies . . . 1.4-1
1.4.1 Preliminary Planning Phase . . . 1.4-1
1.4.2 Final Design Phase . . . 1.4-1

1.5 Bridge Design Scheduling . . . 1.5-1
1.5.1 General . . . 1.5-1
1.5.2 Preliminary Design Schedule . . . 1.5-1
1.5.3 Final Design Schedule . . . 1.5-1

1.6 Guidelines for Bridge Site Visits . . . 1.6-1
1.6.1 Bridge Rehabilitation Projects . . . 1.6-1
1.6.2 Bridge Widening and Seismic Retrofits . . . 1.6-1
1.6.3 Rail and Minor Expansion Joint Retrofits . . . 1.6-1
1.6.4 New Bridges . . . 1.6-1
1.6.5 Bridge Demolition . . . 1.6-1
1.6.6 Proximity of Railroads Adjacent to the Bridge Site . . . 1.6-2

1.99 References . . . 1.99-1

Appendix 1.1-A1 Bridge Design Manual Revision QA/QC Worksheet . . . 1.1-A1-1
Appendix 1.5-A1 Breakdown of Project Manhours Required Form . . . 1.5-A1-1
Appendix 1.5-A2 Monthly Project Progress Report Form . . . 1.5-A2-1
Appendix 1.5-A3 QA/QC Signature Sheet . . . 1.5-A3-1
Appendix 1.5-A4 Bridge & Structures Design Calculations . . . 1.5-A4-1

Chapter 2 Preliminary Design

2.1 Preliminary Studies . . . 2.1-1
2.1.1 Interdisciplinary Design Studies . . . 2.1-1
2.1.2 Value Engineering Studies . . . 2.1-1
2.1.3 Preliminary Recommendations for Bridge Rehabilitation Projects . . . 2.1-1
2.1.4 Preliminary Recommendations for New Bridge Projects . . . 2.1-2
2.1.5 Type, Size, and Location (TS&L) Reports . . . 2.1-2
2.1.6 Alternate Bridge Designs . . . 2.1-5

2.2 Preliminary Plan . . . 2.2-1
2.2.1 Development of the Preliminary Plan . . . 2.2-1
2.2.2 Documentation . . . 2.2-2
2.2.3 General Factors for Consideration . . . 2.2-3
2.2.4 Permits . . . 2.2-4
2.2.5 Preliminary Cost Estimate . . . 2.2-5
2.2.6 Approvals . . . 2.2-5

2.3 Preliminary Plan Criteria . . . 2.3-1
2.3.1 Highway Crossings . . . 2.3-1
2.3.2 Railroad Crossings . . . 2.3-4
2.3.3 Water Crossings . . . 2.3-5
2.3.4 Bridge Widenings . . . 2.3-7
2.3.5 Detour Structures . . . 2.3-7
2.3.6 Retaining Walls and Noise Walls . . . 2.3-7
2.3.7 Bridge Deck Drainage . . . 2.3-8
2.3.8 Bridge Deck Protection Systems . . . 2.3-8
2.3.9 Construction Clearances . . . 2.3-8
2.3.10 Design Guides for Falsework Depth Requirements . . . 2.3-9
2.3.11 Inspection and Maintenance Access . . . 2.3-10

2.4 Selection of Structure Type . . . 2.4-1
2.4.1 Bridge Types . . . 2.4-1
2.4.2 Wall Types . . . 2.4-6

2.5 Aesthetic Considerations . . . 2.5-1
2.5.1 General Visual Impact . . . 2.5-1
2.5.2 End Piers . . . 2.5-1
2.5.3 Intermediate Piers . . . 2.5-2
2.5.4 Barrier and Wall Surface Treatments . . . 2.5-2
2.5.5 Superstructure . . . 2.5-3

2.6 Miscellaneous . . . 2.6-1
2.6.1 Structure Costs . . . 2.6-1
2.6.2 Handling and Shipping Precast Members and Steel Beams . . . 2.6-1
2.6.3 Salvage of Materials . . . 2.6-1

2.7 WSDOT Standard Highway Bridge . . . 2.7-1
2.7.1 Design Elements . . . 2.7-1
2.7.2 Detailing the Preliminary Plan . . . 2.7-2

2.99 References . . . 2.99-1

Appendix 2.2-A1 Bridge Site Data General 2.2-A1-1
Appendix 2.2-A2 Bridge Site Data Rehabilitation 2.2-A2-1
Appendix 2.2-A3 Bridge Site Data Stream Crossing 2.2-A3-1
Appendix 2.2-A4 Preliminary Plan Checklist 2.2-A4-1
Appendix 2.2-A5 Request For Preliminary Geotechnical Information 2.2-A5-1
Appendix 2.3-A1 Bridge Stage Construction Comparison 2.3-A1-1
Appendix 2.3-A2 Bridge Redundancy Criteria 2.3-A2-1
Appendix 2.4-A1 Bridge Selection Guide 2.4-A1-1
Appendix 2.7-A1 Standard Superstructure Elements 2.7-A1-1
Appendix 2-B-1 . . . . . 2-B-1
Appendix 2-B-2 . . . . . 2-B-2
Appendix 2-B-3 . . . . . 2-B-3
Appendix 2-B-4 . . . . . 2-B-4
Appendix 2-B-5 . . . . . 2-B-5
Appendix 2-B-6 . . . . . 2-B-6
Appendix 2-B-7 . . . . . 2-B-7
Appendix 2-B-8 . . . . . 2-B-8
Appendix 2-B-9 . . . . . 2-B-9

Chapter 3 Loads

3.1 Scope 3.1-1

3.2 Definitions 3.2-1

3.3 Load Designations 3.3-1

3.4 Limit States 3.4-1

3.5 Load Factors and Load Combinations 3.5-1
3.5.1 Load Factors for Substructure 3.5-2

3.6 Loads and Load Factors for Construction 3.6-1

3.7 Load Factors for Post-tensioning 3.7-1
3.7.1 Post-tensioning Effects from Superstructure 3.7-1
3.7.2 Secondary Forces from Post-tensioning, PS 3.7-1

3.8 Permanent Loads 3.8-1
3.8.1 Deck Overlay Requirement 3.8-1

3.9 Live Loads 3.9-1
3.9.1 Live Load Designation 3.9-1
3.9.2 Live Load Analysis of Continuous Bridges 3.9-1
3.9.3 Loading for Live Load Deflection Evaluation 3.9-1
3.9.4 Distribution to Superstructure 3.9-1
3.9.5 Bridge Load Rating 3.9-3

3.10 Pedestrian Loads 3.10-1

3.11 Wind Loads 3.11-1
3.11.1 Wind Load to Superstructure 3.11-1
3.11.2 Wind Load to Substructure 3.11-1
3.11.3 Wind on Noise Walls 3.11-1

3.12 Noise Barriers 3.12-1

3.13 Earthquake Effects 3.13-1

3.14 Earth Pressure 3.14-1

3.15 Force Effects Due to Superimposed Deformations 3.15-1

3.16 Other Loads 3.16-1
3.16.1 Buoyancy 3.16-1
3.16.2 Collision Force on Bridge Substructure 3.16-1
3.16.3 Collision Force on Traffic Barrier 3.16-1
3.16.4 Force from Stream Current, Floating Ice, and Drift 3.16-1
3.16.5 Ice Load 3.16-1
3.16.6 Uniform Temperature Load 3.16-1

3.99 References 3.99-1
Appendix 3.1-A1 Torsional Constants of Common Sections 3.1-A1-1
Appendix 3.1-B1 HL-93 Loading for Bridge Piers 3.1-B1-1

Chapter 4 Seismic Design and Retrofit

4.1 General 4.1-1

4.2 WSDOT Modifications to *AASHTO Guide Specifications for LRFD Seismic Bridge Design* 4.2-1
4.2.1 Definitions 4.2-1
4.2.2 Earthquake Resisting Systems (ERS) Requirements for SDCs C and D 4.2-1
4.2.3 Seismic Ground Shaking Hazard 4.2-5
4.2.4 Selection of Seismic Design Category (SDC) 4.2-5
4.2.5 Temporary and Staged Construction 4.2-5
4.2.6 Load and Resistance Factors 4.2-6
4.2.7 Balanced Stiffness Requirements and Balanced Frame Geometry Recommendation 4.2-6
4.2.8 Selection of Analysis Procedure to Determine Seismic Demand 4.2-6
4.2.9 Design Requirements for Single-Span Bridges 4.2-6
4.2.10 Member Ductility Requirement for SDCs C and D 4.2-6
4.2.11 Plastic Hinging Forces 4.2-8
4.2.12 Minimum Support Length Requirements Seismic Design Category D 4.2-9
4.2.13 Longitudinal Restrainers 4.2-9
4.2.14 Abutments 4.2-9
4.2.15 Foundation – General 4.2-9
4.2.16 Foundation – Spread Footing 4.2-9
4.2.17 Procedure 3: Nonlinear Time History Method 4.2-10
4.2.18 Figure 5.6.2-1 . . . . 4.2-10
4.2.19 I_{eff} for Box Girder Superstructure 4.2-10
4.2.20 Foundation Rocking 4.2-10
4.2.21 Footing Joint Shear for SDCs C and D 4.2-10
4.2.22 Drilled Shafts 4.2-12
4.2.23 Longitudinal Direction Requirements 4.2-13
4.2.24 Liquefaction Design Requirements 4.2-13
4.2.25 Reinforcing Steel 4.2-13
4.2.26 Plastic Moment Capacity for Ductile Concrete Members for SDCs B, C, and D 4.2-13

4.2.27 Shear Demand and Capacity for Ductile Concrete Members for SDCs B, C, and D 4.2-14
4.2.28 Concrete Shear Capacity 4.2-14
4.2.29 Shear Reinforcement Capacity 4.2-15
4.2.30 Interlocking Bar Size 4.2-15
4.2.31 Splicing of Longitudinal Reinforcement in Columns Subject to Ductility Demands for SDCs C and D 4.2-15
4.2.32 Minimum Development Length of Reinforcing Steel for SDCs A and D 4.2-16
4.2.33 Requirements for Lateral Reinforcement for SDCs B, C, and D 4.2-16
4.2.34 Development Length for Column Bars Extended into Oversized Pile Shafts for SDCs C and D 4.2-16
4.2.35 Lateral Reinforcements for Columns Supported on Oversized Pile Shaft for SDCs C and D 4.2-16
4.2.36 Lateral Confinement for Oversized Pile Shaft for SDCs C and D 4.2-16
4.2.37 Lateral Confinement for Non-Oversized Strengthened Pile Shaft for SDCs C and D 4.2-16
4.2.38 Requirements for Capacity Protected Members 4.2-17
4.2.39 Superstructure Capacity Design for Integral Bent Caps for Longitudinal Direction for SDCs B, C, and D 4.2-18
4.2.40 Superstructure Capacity Design for Transverse Direction (Integral Bent Cap) for SDCs B, C, and D 4.2-18
4.2.41 Superstructure Design for Non-Integral Bent Caps for SDCs B, C, and D 4.2-18
4.2.42 Joint Proportioning 4.2-18
4.2.43 Minimum Joint Shear Reinfocing 4.2-20
4.2.44 Additional Longitudinal Cap Beam Reinforcement 4.2-21
4.2.45 Horizontal Isolated Flares 4.2-21
4.2.46 Column Shear Key Design for SDCs C and D 4.2-22
4.2.47 Cast-in-Place and Precast Concrete Piles 4.2-22

4.3 Seismic Design Requirements for Bridge Widening Projects 4.3-1
4.3.1 Seismic Analysis and Retrofit Policy 4.3-1
4.3.2 Design and Detailing Considerations 4.3-3

4.4 Seismic Retrofitting of Existing Bridges 4.4-1
4.4.1 General 4.4-1
4.4.2 Seismic Analysis Requirements 4.4-1
4.4.3 Seismic Retrofit Design 4.4-1
4.4.4 Computer Analysis Verification 4.4-1
4.4.5 Earthquake Restrainers 4.4-1

4.5 Seismic Design Requirements for Retaining Walls 4.5-1
4.5.1 General 4.5-1

4.99 References 4.99-1

Appendix 4-B1 Design Examples of Seismic Retrofits 4-B1-1
Appendix 4-B2 SAP2000 Seismic Analysis Example 4-B2-1

Chapter 5 Concrete Structures

5.0 General 5.0-1

5.1 Materials 5.1-1
- 5.1.1 Concrete 5.1-1
- 5.1.2 Reinforcing Steel 5.1-6
- 5.1.3 Prestressing Steel 5.1-9
- 5.1.4 Prestress Losses 5.1-13
- 5.1.5 Prestressing Anchorage Systems 5.1-16
- 5.1.6 Post-tensioning Ducts 5.1-16

5.2 Design Considerations 5.2-1
- 5.2.1 Service and Fatigue Limit States 5.2-1
- 5.2.2 Strength-Limit State 5.2-2
- 5.2.3 Strut-and-tie Model 5.2-7
- 5.2.4 Deflection and Camber 5.2-7
- 5.2.5 Construction Joints 5.2-9
- 5.2.6 Inspection Lighting and Access 5.2-10

5.3 Reinforced Concrete Box Girder Bridges 5.3-1
- 5.3.1 Box Girder Basic Geometries 5.3-1
- 5.3.2 Reinforcement 5.3-5
- 5.3.3 Crossbeam 5.3-13
- 5.3.4 End Diaphragm 5.3-16
- 5.3.5 Dead Load Deflection and Camber 5.3-18
- 5.3.6 Thermal Effects 5.3-19
- 5.3.7 Hinges 5.3-19
- 5.3.8 Drain Holes 5.3-19

5.4 Hinges and Inverted T-Beam Pier Caps 5.4-1

5.5 Bridge Widenings 5.5-1
- 5.5.1 Review of Existing Structures 5.5-1
- 5.5.2 Analysis and Design Criteria 5.5-2
- 5.5.3 Removing Portions of the Existing Structure 5.5-5
- 5.5.4 Attachment of Widening to Existing Structure 5.5-5
- 5.5.5 Expansion Joints 5.5-17
- 5.5.6 Possible Future Widening for Current Designs 5.5-18
- 5.5.7 Bridge Widening Falsework 5.5-18
- 5.5.8 Existing Bridge Widenings 5.5-18

5.6 Precast Prestressed Girder Superstructures 5.6-1
- 5.6.1 WSDOT Standard Girder Types 5.6-1
- 5.6.2 Design Criteria 5.6-3
- 5.6.3 Fabrication and Handling 5.6-11
- 5.6.4 Superstructure Optimization 5.6-15
- 5.6.5 Repair of Damaged Girders at Fabrication 5.6-18
- 5.6.6 Repair of Damaged Girders in Existing Bridges 5.6-18
- 5.6.7 Short Span Precast Prestressed Bridges 5.6-21
- 5.6.8 Precast Prestressed Concrete Tub Girders 5.6-22
- 5.6.9 Prestressed Girder Checking Requirement 5.6-23
- 5.6.10 Review of Shop Plans for Pretensioned Girders 5.6-23

5.7 Deck Slabs 5.7-1
5.7.1 Deck Slab Requirements 5.7-1
5.7.2 Deck Slab Reinforcement 5.7-2
5.7.3 Stay-in-place Deck Panels 5.7-6
5.7.4 Bridge Deck Protection 5.7-7
5.7.5 Bridge Deck HMA Paving Design Policies 5.7-12

5.8 Cast-in-place Post-tensioned Bridges 5.8-1
5.8.1 Design Parameters 5.8-1
5.8.2 Analysis 5.8-8
5.8.3 Post-tensioning 5.8-9
5.8.4 Shear and Anchorages 5.8-14
5.8.5 Temperature Effects 5.8-15
5.8.6 Construction 5.8-16
5.8.7 Post-tensioning Notes — Cast-in-place Girders 5.8-17

5.9 Spliced Precast Girders 5.9-1
5.9.1 Definitions 5.9-1
5.9.2 WSDOT Criteria for Use of Spliced Girders 5.9-2
5.9.3 Girder Segment Design 5.9-2
5.9.4 Joints Between Segments 5.9-2
5.9.5 Review of Shop Plans for Precast Post-tensioned Spliced-girders 5.9-7
5.9.6 Post-tensioning Notes — Precast Post-tensioning Spliced-Girders 5.9-8

5.99 References 5.99-1

Appendix 5.1-A1 Standard Hooks 5.1-A1-1
Appendix 5.1-A2 Minimum Reinforcement Clearance and Spacing for Beams and Columns 5.1-A2-1
Appendix 5.1-A3 Reinforcing Bar Properties 5.1-A3-1
Appendix 5.1-A4 Tension Development Length of Deformed Bars 5.1-A4-1
Appendix 5.1-A5 Compression Development Length and Minimum Lap Splice of Grade 60 Bars 5.1-A5-1
Appendix 5.1-A6 Tension Development Length of 90º and 180º Standard Hooks 5.1-A6-1
Appendix 5.1-A7 Tension Lap Splice Lengths of Grade 60 Bars — Class B 5.1-A7-1
Appendix 5.1-A8 Prestressing Strand Properties and Development Length 5.1-A8-1
Appendix 5.2-A1 Working Stress Design 5.2-A1-1
Appendix 5.2-A2 Working Stress Design 5.2-A2-1
Appendix 5.2-A3 Working Stress Design 5.2-A3-1
Appendix 5.3-A1 Positive Moment Reinforcement 5.3-A1-1
Appendix 5.3-A2 Negative Moment Reinforcement 5.3-A2-1
Appendix 5.3-A3 Adjusted Negative Moment Case I (Design for M at Face of Support) . . 5.3-A3-1
Appendix 5.3-A4 Adjusted Negative Moment Case II (Design for M at ¼ Point) 5.3-A4-1
Appendix 5.3-A5 Cast-In-Place Deck Slab Design for Positive Moment Regions $f'_c = 4.0$ ksi 5.3-A5-1
Appendix 5.3-A6 Cast-In-Place Deck Slab Design for Negative Moment Regions $f'_c = 4.0$ ksi 5.3-A6-1
Appendix 5.3-A7 Slab Overhang Design-Interior Barrier Segment 5.3-A7-1
Appendix 5.3-A8 Slab Overhang Design-End Barrier Segment 5.3-A8-1
Appendix 5.6-A1-1 Span Capability of W Girders 5.6-A1-1
Appendix 5.6-A1-2 Span Capability of WF Girders 5.6-A1-2
Appendix 5.6-A1-3 Span Capability of Bulb Tee Girders 5.6-A1-3
Appendix 5.6-A1-4 Span Capability of Deck Bulb Tee Girders 5.6-A1-4
Appendix 5.6-A1-5 Span Capability of Slab Girders with 5″ CIP Topping 5.6-A1-5
Appendix 5.6-A1-6 Span Capability of Trapezoidal Tub Girders without Top Flange 5.6-A1-6

Appendix 5.6-A1-7 Span Capability of Trapezoidal Tub Girders with Top Flange 5.6-A1-7
Appendix 5.6-A1-8 Span Capability of Post-tensioned Spliced I-Girders 5.6-A1-8
Appendix 5.6-A1-9 Span Capability of Post-tensioned Spliced Tub Girders 5.6-A1-9
Appendix 5.6-A1-10 I-Girder Sections 5.6-A1-10
Appendix 5.6-A1-11 Short Spam and Deck Girder Sections 5.6-A1-11
Appendix 5.6-A1-12 Spliced Girder Sections 5.6-A1-12
Appendix 5.6-A1-13 Tub Girder Sections 5.6-A1-13
Appendix 5.6-A2-1 Single Span Prestressed Girder Construction Sequence 5.6-A2-1
Appendix 5.6-A2-2 Multiple Span Prestressed Girder Construction Sequence 5.6-A2-2
Appendix 5.6-A2-3 Raised Crossbeam Prestressed Girder Construction Sequence 5.6-A2-3
Appendix 5.6-A3-1 W42G Girder Details 1 of 2 . . . . . 5.6-A3-1
Appendix 5.6-A3-2 W42G Girder Details 2 of 2 . . . . . 5.6-A3-2
Appendix 5.6-A3-3 W50G Girder Details 1 of 2 . . . . . 5.6-A3-3
Appendix 5.6-A3-4 W50G Girder Details 2 of 2 . . . . . 5.6-A3-4
Appendix 5.6-A3-5 W58G Girder Details 1 of 3 . . . . . 5.6-A3-5
Appendix 5.6-A3-6 W58G Girder Details 2 of 3 . . . . . 5.6-A3-6
Appendix 5.6-A3-7 W58G Girder Details 3 of 3 . . . . . 5.6-A3-7
Appendix 5.6-A3-8 W74G Girder Details 1 of 3 . . . . . 5.6-A3-8
Appendix 5.6-A3-9 W74G Girder Details 2 of 3 . . . . . 5.6-A3-9
Appendix 5.6-A3-10 W74G Girder Details 3 of 3 . . . . . 5.6-A3-10
Appendix 5.6-A4-1 WF Girder Schedule 5.6-A4-1
Appendix 5.6-A4-2 WF36G Girder Details 1 of 3 . . . . . 5.6-A4-2
Appendix 5.6-A4-3 WF42G Girder Details 1 of 3 . . . . . 5.6-A4-3
Appendix 5.6-A4-4 WF50G Girder Details 1 of 3 . . . . . 5.6-A4-4
Appendix 5.6-A4-5 WF58G Girder Details 1 of 3 . . . . . 5.6-A4-5
Appendix 5.6-A4-6 WF66G Girder Details 1 of 3 . . . . . 5.6-A4-6
Appendix 5.6-A4-7 WF74G Girder Details 1 of 3 . . . . . 5.6-A4-7
Appendix 5.6-A4-8 WF83G Girder Details 1 of 3 . . . . . 5.6-A4-8
Appendix 5.6-A4-9 WF95G Girder Details 1 of 3 . . . . . 5.6-A4-9
Appendix 5.6-A4-10 WF100G Girder Details 1 of 3 . . . . . 5.6-A4-10
Appendix 5.6-A4-11 WF Girder Details 2 of 3 . . . . . 5.6-A4-11
Appendix 5.6-A4-12 WF Girder Details 3 of 3 . . . . . 5.6-A4-12
Appendix 5.6-A4-13 Additional Extended Strands 5.6-A4-13
Appendix 5.6-A4-14 End Diaphragm Details 5.6-A4-14
Appendix 5.6-A4-15 L Abutment End Diaphragm Details 5.6-A4-15
Appendix 5.6-A4-16 Flush Diaphragm at Intermediate Pier Details 5.6-A4-16
Appendix 5.6-A4-17 Recessed Diaphragm at Intermediate Pier Details 5.6-A4-17
Appendix 5.6-A4-18 Hinge Diaphragm at Intermediate Pier Details 5.6-A4-18
Appendix 5.6-A4-19 Partial Intermediate Diaphragm Details 5.6-A4-19
Appendix 5.6-A4-20 Full Intermediate Diaphragm Details 5.6-A4-20
Appendix 5.6-A4-21 I Girder Bearing Details 5.6-A4-21
Appendix 5.6-A5-1 W32BTG Girder Details 1 of 3 . . . . . 5.6-A5-1
Appendix 5.6-A5-2 W38BTG Girder Details 1 of 3 . . . . . 5.6-A5-2
Appendix 5.6-A5-3 W62BTG Girder Details 1 of 3 . . . . . 5.6-A5-3
Appendix 5.6-A5-4 Bulb Tee Girder Details 2 of 3 . . . . . 5.6-A5-4
Appendix 5.6-A5-5 Bulb Tee Girder Details 3 of 3 . . . . . 5.6-A5-5
Appendix 5.6-A6-1 Deck Bulb Tee Girder Schedule 5.6-A6-1
Appendix 5.6-A6-2 Deck Bulb Tee Girder Details 1 of 2 . . . . . 5.6-A6-2
Appendix 5.6-A6-3 Deck Bulb Tee Girder Details 2 of 2 . . . . . 5.6-A6-3
Appendix 5.6-A8-1 Slab Girder Schedule 5.6-A8-1
Appendix 5.6-A8-2 12″ Slab Girder Details 1 of 2 . . . . . 5.6-A8-2
Appendix 5.6-A8-3 18″ Slab Girder Details 1 of 2 . . . . . 5.6-A8-3
Appendix 5.6-A8-4 26″ Slab Girder Details 1 of 2 . . . . . 5.6-A8-4

Appendix 5.6-A8-5	30″ Slab Girder Details 1 of 2	5.6-A8-5
Appendix 5.6-A8-6	36″ Slab Girder Details 1 of 2	5.6-A8-6
Appendix 5.6-A8-7	Slab Girder Details 2 of 2	5.6-A8-7
Appendix 5.6-A8-8	Slab Girder Fixed Diaphragm	5.6-A8-8
Appendix 5.6-A8-9	Slab Girder Hinge Diaphragm	5.6-A8-9
Appendix 5.6-A8-10	Slab Girder End Pier	5.6-A8-10
Appendix 5.6-A9-1	Tub Girder Schedule and Notes	5.6-A9-1
Appendix 5.6-A9-2	Tub Girder Details 1 of 3	5.6-A9-2
Appendix 5.6-A9-3	Tub Girder Details 2 of 3	5.6-A9-3
Appendix 5.6-A9-4	Tub Girder Details 3 of 3	5.6-A9-4
Appendix 5.6-A9-5	Tub Girder End Diaphragm on Girder Details	5.6-A9-5
Appendix 5.6-A9-6	Tub Girder Raised Crossbeam Details	5.6-A9-6
Appendix 5.6-A9-7	Tub S-I-P Deck Panel Girder End Diaphragm on Girder Details	5.6-A9-7
Appendix 5.6-A9-8	Tub S-I-P Deck Panel Girder Raised Crossbeam Details	5.6-A9-8
Appendix 5.6-A9-9	Tub Girder Bearing Details	5.6-A9-9
Appendix 5.6-A10-1	SIP Deck Panel Details	5.6-A10-1
Appendix 5.9-A1-1	WF74PTG Spliced Girders Details 1 of 5	5.9-A1-1
Appendix 5.9-A1-2	WF74PTG Spliced Girder Details 2 of 5	5.9-A1-2
Appendix 5.9-A1-3	Spliced Girder Details 3 of 5	5.9-A1-3
Appendix 5.9-A1-4	WF74PTG Girder Details 4 of 5	5.9-A1-4
Appendix 5.9-A1-5	Spliced Girder Details 5 of 5	5.9-A1-5
Appendix 5.9-A2-1	WF83PTG Spliced Girder Details 1 of 5	5.9-A2-1
Appendix 5.9-A2-2	WF83PTG Spliced Girder Details 2 of 5	5.9-A2-2
Appendix 5.9-A2-4	WF83PTG Spliced Girder Details 4 of 5	5.9-A2-3
Appendix 5.9-A3-1	WF95PTG Spliced Girder Details 1 of 5	5.9-A3-1
Appendix 5.9-A3-2	WF95PTG Spliced Girder Details 2 of 5	5.9-A3-2
Appendix 5.9-A3-4	WF95PTG Spliced Girder Details 4 of 5	5.9-A3-3
Appendix 5.9-A4-1	Tub Spliced Girder Miscellaneous Bearing Details	5.9-A4-1
Appendix 5.9-A4-2	Tub Spliced Girder Details 1 of 5	5.9-A4-2
Appendix 5.9-A4-3	Tub Spliced Girder Details 2 of 5	5.9-A4-3
Appendix 5.9-A4-4	Tub Spliced Girder Details 3 of 5	5.9-A4-4
Appendix 5.9-A4-5	Tub Spliced Girder Details 4 of 5	5.9-A4-5
Appendix 5.9-A4-6	Tub Spliced Girder Details 5 of 5	5.9-A4-6
Appendix 5.9-A4-7	Tub Spliced Girder End Diaphragm on Girder Details	5.9-A4-7
Appendix 5.9-A4-8	Tub Spliced Girder Raised Crossbeam Details	5.9-A4-8
Appendix 5.9-A5-1	Tub SIP Deck Panel Spliced Girder Details 1 of 5	5.9-A5-1
Appendix 5.9-A5-2	Tub SIP Deck Panel Spliced Girder Details 2 of 5	5.9-A5-2
Appendix 5.9-A5-3	Tub SIP Deck Panel Spliced Girder Details 3 of 5	5.9-A5-3
Appendix 5.9-A5-4	Tub SIP Deck Panel Spliced Girder Details 4 of 5	5.9-A5-4
Appendix 5.9-A5-5	Tub SIP Deck Panel Spliced Girder Details 5 of 5	5.9-A5-5
Appendix 5.9-A5-6	Tub SIP Deck Panel Girder End Diaphragm on Girder Details	5.9-A5-6
Appendix 5.9-A5-7	Tub SIP Deck Panel Girder Raised Crossbeam Details	5.9-A5-7
Appendix 5-B1	“A” Dimension for Precast Girder Bridges	5-B1-1
Appendix 5-B2	Vacant	5-B2-1
Appendix 5-B3	Existing Bridge Widenings	5-B3-1
Appendix 5-B4	Post-tensioned Box Girder Bridges	5-B4-1
Appendix 5-B5	Simple Span Prestressed Girder Design	5-B5-1
Appendix 5-B6	Cast-in-Place Slab Design Example	5-B6-1
Appendix 5-B7	Precast Concrete Stay-in-place (SIP) Deck Panel	5-B7-1
Appendix 5-B8	W35DG Deck Bulb Tee 48" Wide	5-B8-1
Appendix 5-B9	Prestressed Voided Slab with Cast-in-Place Topping	5-B9-1
Appendix 5-B10	Positive EQ Reinforcement at Interior Pier of a Prestressed Girder	5-B10-1
Appendix 5-B11	LRFD Wingwall Design Vehicle Collision	5-B11-1

Appendix 5-B12 Flexural Strength Calculations for Composite T-Beams 5-B12-1
Appendix 5-B13 Strut-and-Tie Model Design Example for Hammerhead Pier 5-B13-1
Appendix 5-B14 Shear and Torsion Capacity of a Reinforced Concrete Beam 5-B14-1
Appendix 5-B15 Sound Wall Design – Type D-2k 5-B15-1

Chapter 6 Structural Steel

6.0 Structural Steel 6.0-1
6.0.1 Introduction 6.0-1
6.0.2 Special Requirements for Steel Bridge Rehabilitation or Modification 6.0-1

6.1 Design Considerations 6.1-1
6.1.1 Codes, Specification, and Standards 6.1-1
6.1.2 Preferred Practice 6.1-1
6.1.3 Preliminary Girder Proportioning 6.1-2
6.1.4 Estimating Structural Steel Weights 6.1-2
6.1.5 Bridge Steels 6.1-4
6.1.6 Available Plate Sizes 6.1-5
6.1.7 Girder Segment Sizes 6.1-5
6.1.8 Computer Programs 6.1-5
6.1.9 Fasteners 6.1-5

6.2 Girder Bridges 6.2-1
6.2.1 General 6.2-1
6.2.2 I-Girders 6.2-1
6.2.3 Tub or Box Girders 6.2-1
6.2.4 Fracture Critical Superstructures 6.2-3

6.3 Design of I-Girders 6.3-1
6.3.1 Limit States for AASHTO LRFD 6.3-1
6.3.2 Composite Section 6.3-1
6.3.3 Flanges 6.3-1
6.3.4 Webs 6.3-2
6.3.5 Transverse Stiffeners 6.3-2
6.3.6 Longitudinal Stiffeners 6.3-2
6.3.7 Bearing Stiffeners 6.3-2
6.3.8 Crossframes 6.3-3
6.3.9 Bottom Laterals 6.3-4
6.3.10 Bolted Field Splice for Girders 6.3-4
6.3.11 Camber 6.3-5
6.3.12 Roadway Slab Placement Sequence 6.3-6
6.3.13 Bridge Bearings for Steel Girders 6.3-7
6.3.14 Surface Roughness and Hardness 6.3-7
6.3.15 Welding 6.3-9
6.3.16 Shop Assembly 6.3-10

6.4 Plan Details 6.4-1
6.4.1 General 6.4-1
6.4.2 Structural Steel Notes 6.4-1
6.4.3 Framing Plan 6.4-1
6.4.4 Girder Elevation 6.4-1
6.4.5 Typical Girder Details 6.4-2
6.4.6 Crossframe Details 6.4-2
6.4.7 Camber Diagram and Bearing Stiffener Rotation 6.4-2
6.4.8 Bridge Deck 6.4-3
6.4.9 Handrail Details, Inspection Lighting, and Access 6.4-3
6.4.10 Box Girder Details 6.4-4

6.5 Shop Plan Review 6.5-1

6.99 References 6.99-1

Appendix 6.4-A1 Framing Plan 6.4-A1
Appendix 6.4-A2 Girder Elevation 6.4-A2
Appendix 6.4-A3 Girder Details 6.4-A3
Appendix 6.4-A4 Steel Plate Girder Field Splice 6.4-A4
Appendix 6.4-A5 Example Crossframe Details 6.4-A5
Appendix 6.4-A6 Camber Diagram 6.4-A6
Appendix 6.4-A7 Steel Plate Girder Roadway Section 6.4-A7
Appendix 6.4-A8 Steel Plate Girder Slab Plan 6.4-A8
Appendix 6.4-A9 Handrail 6.4-A9
Appendix 6.4-A10 Box Girder Geometrics and Proportions 6.4-A10
Appendix 6.4-A11 Example Box Girder Details 6.4-A11
Appendix 6.4-A12 Example Box Girder Pier Diaphragm Details 6.4-A12
Appendix 6.4-A13 Example Box Girder Miscellaneous Details 6.4-A13

Chapter 7 Substructure Design

7.1 General Substructure Considerations 7.1-1
7.1.1 Foundation Design Process 7.1-1
7.1.2 Foundation Design Limit States 7.1-4
7.1.3 Seismic Design 7.1-4
7.1.4 Substructure and Foundation Loads 7.1-4
7.1.5 Concrete Class for Substructure 7.1-5
7.1.6 Foundation Seals 7.1-6

7.2 Foundation Modeling For Seismic Loads 7.2-1
7.2.1 General 7.2-1
7.2.2 Substructure Elastic Dynamic Analysis Procedure 7.2-1
7.2.3 Bridge Model Section Properties 7.2-2
7.2.4 Bridge Model Verification 7.2-3
7.2.5 Deep Foundation Modeling Methods 7.2-4
7.2.6 Lateral Analysis of Piles and Shafts 7.2-8
7.2.7 Spread Footing Modeling 7.2-12

7.3 Column Design . . . 7.3-1
7.3.1 Preliminary Plan Stage . . . 7.3-1
7.3.2 General Column Criteria . . . 7.3-1
7.3.3 Column Design Flow Chart – Evaluation of Slenderness Effects . . . 7.3-2
7.3.4 Slenderness Effects . . . 7.3-3
7.3.5 Moment Magnification Method . . . 7.3-3
7.3.6 Second-Order Analysis . . . 7.3-3
7.3.7 Shear Design . . . 7.3-4

7.4 Column Reinforcement . . . 7.4-1
7.4.1 Reinforcing Bar Material . . . 7.4-1
7.4.2 Longitudinal Reinforcement Ratio . . . 7.4-1
7.4.3 Longitudinal Splices . . . 7.4-1
7.4.4 Longitudinal Development . . . 7.4-3
7.4.5 Transverse Reinforcement . . . 7.4-4
7.4.6 Hinge Diaphragms . . . 7.4-9
7.4.7 Reduced Column Fixity . . . 7.4-11

7.5 Abutment Design and Details . . . 7.5-1
7.5.1 Abutment Types . . . 7.5-1
7.5.2 Embankment at Abutments . . . 7.5-3
7.5.3 Abutment Loading . . . 7.5-3
7.5.4 WSDOT Temporary Construction Load Cases . . . 7.5-4
7.5.5 Abutment Bearings and Girder Stops . . . 7.5-4
7.5.6 Abutment Expansion Joints . . . 7.5-6
7.5.7 Open Joint Details . . . 7.5-6
7.5.8 Construction Joints . . . 7.5-8
7.5.9 Abutment Wall Design . . . 7.5-8
7.5.10 Drainage and Backfilling . . . 7.5-10

7.6 Wing/Curtain Wall at Abutments . . . 7.6-1
7.6.1 Traffic Barrier Loads . . . 7.6-1
7.6.2 Wingwall Design . . . 7.6-1
7.6.3 Wingwall Detailing . . . 7.6-1

7.7 Footing Design . . . 7.7-1
7.7.1 General Footing Criteria . . . 7.7-1
7.7.2 Loads and Load Factors . . . 7.7-2
7.7.3 Geotechnical Report Summary . . . 7.7-3
7.7.4 Spread Footing Structural Design . . . 7.7-4
7.7.5 Footing Concrete Design on Pile Supports . . . 7.7-9

7.8 Drilled Shafts . . . 7.8-1
7.8.1 Axial Resistance . . . 7.8-1
7.8.2 Structural Design and Detailing . . . 7.8-5

7.9 Piles and Piling 7.9-1
7.9.1 Pile Types 7.9-1
7.9.2 Single Pile Axial Resistance 7.9-2
7.9.3 Block Failure 7.9-2
7.9.4 Pile Uplift 7.9-3
7.9.5 Pile Spacing 7.9-3
7.9.6 Structural Design and Detailing of CIP Concrete Piles 7.9-3
7.9.7 Pile Splices 7.9-4
7.9.8 Pile Lateral Design 7.9-4
7.9.9 Battered Piles 7.9-4
7.9.10 Pile Tip Elevations and Quantities 7.9-5
7.9.11 Plan Pile Resistance 7.9-5

Appendix 7-B1 Linear Spring Calculation 7-B1-1
Appendix 7-B2 Non-Linear Springs Method III 7-B2-1
Appendix 7-B3 Pile Footing Matrix Example Method II (Technique I) 7-B3-1

Chapter 8 Walls & Buried Structures

8.1 Retaining Walls 8.1-1
8.1.1 General 8.1-1
8.1.2 Common Types of Walls 8.1-1
8.1.3 Design 8.1-3
8.1.4 Miscellaneous Items 8.1-8

8.2 Miscellaneous Underground Structures 8.2-1
8.2.1 General 8.2-1
8.2.2 Design 8.2-1
8.2.3 References 8.2-4

Appendix 8.1-A1 Summary of Design Specification Requirements for Walls 8.1-A1-1
Appendix 8.1-A2-1 SEW Wall Elevation 8.1-A2-1
Appendix 8.1-A2-2 SEW Wall Section 8.1-A2-2
Appendix 8.1-A3-1 Soldier Pile/Tieback Wall Elevation 8.1-A3-1
Appendix 8.1-A3-2 Soldier Pile/Tieback Wall Details 1 of 2 . . . . . 8.1-A3-2
Appendix 8.1-A3-3 Soldier Pile/Tieback Wall Details 1 of 2 . . . . . 8.1-A3-3
Appendix 8.1-A3-4 Soldier Pile/Tieback Wall Details 2 of 2 . . . . . 8.1-A3-4
Appendix 8.1-A3-5 Soldier Pile/Tieback Wall Fascia Panel Details 8.1-A3-5
Appendix 8.1-A3-6 Soldier Pile/Tieback Wall Permanent Ground Anchor Details 8.1-A3-6
Appendix 8.1-A4-1 Soil Nail Layout 8.1-A4-1
Appendix 8.1-A4-2 Soil Nail Wall Section 8.1-A4-2
Appendix 8.1-A4-3 Soil Nail Wall Fascia Panel Details 8.1-A4-3
Appendix 8.1-A5-1 Noise Barrier on Bridge 8.1-A5-1
Appendix 8.1-A6-1 Cable Fence – Side Mount 8.1-A6-1
Appendix 8.1-A6-2 Cable Fence – Top Mount 8.1-A6-2

Chapter 9 Bearings & Expansion Joints

9.1 Expansion Joints 9.1-1
9.1.1 General Considerations 9.1-1
9.1.2 General Design Criteria 9.1-3
9.1.3 Small Movement Range Joints 9.1-4
9.1.4 Medium Movement Range Joints 9.1-10
9.1.5 Large Movement Range Joints 9.1-13

9.2 Bearings 9.2-1
9.2.1 General Considerations 9.2-1
9.2.2 Force Considerations 9.2-1
9.2.3 Movement Considerations 9.2-1
9.2.4 Detailing Considerations 9.2-2
9.2.5 Bearing Types 9.2-2
9.2.6 Miscellaneous Details 9.2-7
9.2.7 Contract Drawing Representation 9.2-8
9.2.8 Shop Drawing Review 9.2-8
9.2.9 Bearing Replacement Considerations 9.2-8

Appendix 9.1-A1-1 Expansion Joint Details Compression Seal 9.1-A1-1
Appendix 9.1-A2-1 Expansion Joint Details Strip Seal 9.1-A2-1
Appendix 9.1-A3-1 Silicone Seal Expansion Joint Details 9.1-A3-1

Chapter 10 Signs, Barriers, Approach Slabs & Utilities

10.1 Sign and Luminaire Supports 10.1-1
10.1.1 Loads 10.1-1
10.1.2 Bridge Mounted Signs 10.1-2
10.1.3 Monotube Sign Structures Mounted on Bridges 10.1-5
10.1.4 Monotube Sign Structures 10.1-5
10.1.5 Foundations 10.1-8
10.1.6 Truss Sign Bridges: Foundation Sheet Design Guidelines 10.1-10

10.2 Bridge Traffic Barriers 10.2-1
10.2.1 General Guidelines 10.2-1
10.2.2 Bridge Railing Test Levels 10.2-1
10.2.3 Available WSDOT Designs 10.2-2
10.2.4 Design Criteria 10.2-5

10.3 At Grade Traffic Barriers 10.3-1
10.3.1 Median Barriers 10.3-1
10.3.2 Shoulder Barriers 10.3-2
10.3.3 Traffic Barrier Moment Slab 10.3-2
10.3.4 Precast Traffic Barrier 10.3-3

10.4 Bridge Traffic Barrier Rehabilitation . . . 10.4-1
10.4.1 Policy . . . 10.4-1
10.4.2 Guidelines . . . 10.4-1
10.4.3 Design Criteria . . . 10.4-1
10.4.4 WSDOT Bridge Inventory of Bridge Rails . . . 10.4-2
10.4.5 Available Retrofit Designs . . . 10.4-2
10.4.6 Available Replacement Designs . . . 10.4-2

10.5 Bridge Railing . . . 10.5-1
10.5.1 Design . . . 10.5-1
10.5.2 Railing Types . . . 10.5-1

10.6 Bridge Approach Slabs . . . 10.6-1
10.6.1 Notes to Region for Preliminary Plan . . . 10.6-1
10.6.2 Approach Slab Design Criteria . . . 10.6-2
10.6.3 Bridge Approach Slab Detailing . . . 10.6-2
10.6.4 Skewed Approach Slabs . . . 10.6-3
10.6.5 Approach Anchors and Expansion Joints . . . 10.6-4
10.6.6 Approach Slab Addition or Retrofit to Existing Bridges . . . 10.6-4
10.6.7 Approach Slab Staging . . . 10.6-6

10.7 Traffic Barrier on Approach Slabs . . . 10.7-1
10.7.1 Approach Slab over Wing Walls, Cantilever Walls or Geosynthetic Walls . . . 10.7-1
10.7.2 Approach Slab over SE Walls . . . 10.7-3

10.8 Utilities Installed with New Construction . . . 10.8-1
10.8.1 General Concepts . . . 10.8-1
10.8.2 Utility Design Criteria . . . 10.8-4
10.8.3 Box/Tub Girder Bridges . . . 10.8-5
10.8.4 Traffic Barrier Conduit . . . 10.8-6
10.8.5 Conduit Types . . . 10.8-7
10.8.6 Utility Supports . . . 10.8-7

10.9 Utility Review Procedure for Installation on Existing Bridges . . . 10.9-1
10.9.1 Utility Review Checklist . . . 10.9-2

10.10 Resin Bonded Anchors . . . 10.10-1

10.11 Drainage Design . . . 10.11-1

Appendix 10.1-A1-1 Monotube Sign Bridge Layouts . . . 10.1-A1-1
Appendix 10.1-A1-2 Monotube Sign Bridge Structural Details 1 . . . 10.1-A1-2
Appendix 10.1-A1-3 Monotube Sign Bridge Structural Details 2 . . . 10.1-A1-3
Appendix 10.1-A2-1 Monotube Cantilever Layout . . . 10.1-A2-1
Appendix 10.1-A2-2 Monotube Cantilever Structural Details 1 . . . 10.1-A2-2
Appendix 10.1-A2-3 Monotube Cantilever Structural Details 2 . . . 10.1-A2-3
Appendix 10.1-A3-1 Monotube Balanced Cantilever Layout . . . 10.1-A3-1
Appendix 10.1-A3-2 Monotube Balanced Cantilever Structural Details 1 . . . 10.1-A3-2
Appendix 10.1-A3-3 Monotube Balanced Cantilever Structural Details 2 . . . 10.1-A3-3
Appendix 10.1-A4-1 Monotube Sign Structures Foundation Type 1 Sheet 1 of 2 . . . 10.1-A4-1
Appendix 10.1-A4-2 Monotube Sign Structures Foundation Type 1 Sheet 2 of 2 . . . 10.1-A4-2
Appendix 10.1-A4-3 Monotube Sign Structures Foundation Types 2 and 3 . . . 10.1-A4-3
Appendix 10.1-A5-1 Monotube Sign Structure Single Slope Traffic Barrier Foundation . . . 10.1-A5-1
Appendix 10.2-A1-1 Traffic Barrier – Shape F Details 1 of 3 . . . 10.2-A1-1

Appendix 10.2-A1-2	Traffic Barrier – Shape F Details 2 of 3	10.2-A1-2
Appendix 10.2-A1-3	Traffic Barrier – Shape F Details 3 of 3	10.2-A1-3
Appendix 10.2-A2-1	Traffic Barrier – Shape F Flat Slab Details 1 of 3	10.2-A2-1
Appendix 10.2-A2-2	Traffic Barrier – Shape F Flat Slab Details 2 of 3	10.2-A2-2
Appendix 10.2-A2-3	Traffic Barrier – Shape F Flat Slab Details 3 of 3	10.2-A2-3
Appendix 10.2-A3-1	Traffic Barrier – Single Slope Details 1 of 3	10.2-A3-1
Appendix 10.2-A3-2	Traffic Barrier – Single Slope Details 2 of 3	10.2-A3-2
Appendix 10.2-A3-3	Traffic Barrier – Single Slope Details 3 of 3	10.2-A3-3
Appendix 10.2-A4-1	Pedestrian Barrier Details 1 of 3	10.2-A4-1
Appendix 10.2-A4-2	Pedestrian Barrier Details 2 of 3	10.2-A4-2
Appendix 10.2-A4-3	Pedestrian Barrier Details 3 of 3	10.2-A4-3
Appendix 10.2-A5-1A	Traffic Barrier – Shape F 42″ Details 1 of 3 (TL-4)	10.2-A5-1
Appendix 10.2-A5-1B	Traffic Barrier – Shape F 42″ Details 1 of 3 (TL-5)	10.2-A5-2
Appendix 10.2-A5-2A	Traffic Barrier – Shape F 42″ Details 2 of 3 (TL-4)	10.2-A5-1
Appendix 10.2-A5-2B	Traffic Barrier – Shape F 42″ Details 2 of 3 (TL-5)	10.2-A5-2
Appendix 10.2-A5-3	Traffic Barrier – Shape F 42″ Details 3 of 3 (TL-4 and TL-5)	10.2-A5-3
Appendix 10.2-A6-1A	Traffic Barrier – Single Slope 42″ Details 1 of 3 (TL-4)	10.2-A6-1
Appendix 10.2-A6-1B	Traffic Barrier – Single Slope 42″ Details 1 of 3 (TL-5)	10.2-A6-2
Appendix 10.2-A6-2A	Traffic Barrier – Single Slope 42″ Details 2 of 3 (TL-4)	10.2-A6-3
Appendix 10.2-A6-2B	Traffic Barrier – Single Slope 42″ Details 2 of 3 (TL-5)	10.2-A6-4
Appendix 10.2-A6-3	Traffic Barrier – Single Slope 42″ Details 3 of 3 (TL-4 and TL-5)	10.2-A6-5
Appendix 10.2-A7-1	Traffic Barrier – Shape F Luminaire Anchorage Details	10.2-A7-1
Appendix 10.2-A7-2	Traffic Barrier – Single Slope Luminaire Anchorage Details	10.2-A7-2
Appendix 10.4-A1-1	Thrie Beam Retrofit Concrete Baluster	10.4-A1-1
Appendix 10.4-A1-2	Thrie Beam Retrofit Concrete Railbase	10.4-A1-2
Appendix 10.4-A1-3	Thrie Beam Retrofit Concrete Curb	10.4-A1-3
Appendix 10.4-A1-4	WP Thrie Beam Retrofit SL1 Details 1 of 2	10.4-A1-4
Appendix 10.4-A1-5	WP Thrie Beam Retrofit SL1 Details 2 of 2	10.4-A1-5
Appendix 10.4-A2-1	Traffic Barrier – Shape F Rehabilitation Details 1 of 3	10.4-A2-1
Appendix 10.4-A2-2	Traffic Barrier – Shape F Rehabilitation Details 2 of 3	10.4-A2-2
Appendix 10.4-A2-3	Traffic Barrier – Shape F Rehabilitation Details 3 of 3	10.4-A2-3
Appendix 10.5-A1-1	Bridge Railing Type Pedestrian Details 1 of 2	10.5-A1-1
Appendix 10.5-A1-2	Bridge Railing Type Pedestrian Details 2 of 2	10.5-A1-2
Appendix 10.5-A2-1	Bridge Railing Type BP Details 1 of 2	10.5-A2-1
Appendix 10.5-A2-2	Bridge Railing Type BP Details 2 of 2	10.5-A2-2
Appendix 10.5-A3-1	Bridge Railing Type S-BP Details 1 of 2	10.5-A3-1
Appendix 10.5-A3-2	Bridge Railing Type S-BP Details 2 of 2	10.5-A3-2
Appendix 10.5-A4-1	Pedestrian Railing Details 1 of 2	10.5-A4-1
Appendix 10.5-A4-2	Pedestrian Railing Details 2 of 2	10.5-A4-2
Appendix 10.5-A5-1	Bridge Railing Type Chain Link Snow Fence	10.5-A5-1
Appendix 10.5-A5-2	Bridge Railing Type Chain Link Fence	10.5-A5-2
Appendix 10.6-A1-1	Bridge Approach Slab Details 1 of 3	10.6-A1-1
Appendix 10.6-A1-2	Bridge Approach Slab Details 2 of 3	10.6-A1-2
Appendix 10.6-A1-3	Bridge Approach Slab Details 3 of 3	10.6-A1-3
Appendix 10.6-A2-1	Pavement Seat Repair Details	10.6-A2-1
Appendix 10.6-A2-2	Pavement Seat Repair Details	10.6-A2-2
Appendix 10.8-A1-1	Utility Hanger Details	10.8-A1-1
Appendix 10.8-A1-2	Utility Hanger Details	10.8-A1-2
Appendix 10.9-A1-1	Utility Installation Guideline Details for Existing Bridges	10.9-A1-1
Appendix 10.11-A1-1	Bridge Drain Modification	10.11-A11
Appendix 10.11-A1-2	Bridge Drain Modification for Types 2 thru 5	10.11-A12

Chapter 11 Detailing Practice

11.1 Detailing Practice 11.1-1
11.1.1 Standard Office Practices 11.1-1
11.1.2 Bridge Office Standard Drawings and Office Examples 11.1-8
11.1.3 Plan Sheets 11.1-8
11.1.4 Electronic Plan Sharing Policy 11.1-10
11.1.5 Structural Steel 11.1-11
11.1.6 Aluminum Section Designations 11.1-12
11.1.7 Abbreviations 11.1-12

Appendix 11.1-A1 . . . . . 11.1-A1-1
Appendix 11.1-A2 . . . . . 11.1-A2-1
Appendix 11.1-A3 . . . . . 11.1-A3-1
Appendix 11.1-A4 Footing Layout 11.1-A4-1

Chapter 12 Quantities, Costs, and Specifications

12.1 Quantities - General 12.1-1
12.1.1 Cost Estimating Quantities 12.1-1
12.1.2 Not Included in Bridge Quantities List 12.1-1

12.2 Computation of Quantities 12.2-1
12.2.1 Responsibilities 12.2-1
12.2.2 Procedure for Computation 12.2-1
12.2.3 Data Source 12.2-1
12.2.4 Accuracy 12.2-2
12.2.5 Excavation 12.2-2
12.2.6 Shoring or Extra Excavation, Class A 12.2-5
12.2.7 Piling 12.2-7
12.2.8 Conduit Pipe 12.2-7
12.2.9 Private Utilities Attached To Bridge Structures 12.2-8
12.2.10 Drilled Shafts 12.2-8

12.3 Construction Costs 12.3-1
12.3.1 Introduction 12.3-1
12.3.2 Factors Affecting Costs 12.3-1
12.3.3 Development of Cost Estimates 12.3-2

12.4 Construction Specifications and Estimates 12.4-1
12.4.1 General 12.4-1
12.4.2 Definitions 12.4-1
12.4.3 General Bridge S&E Process 12.4-1
12.4.4 Reviewing Bridge Plans 12.4-2
12.4.5 Preparing the Bridge Cost Estimates 12.4-3
12.4.6 Preparing the Bridge Specifications 12.4-4
12.4.7 Preparing the Bridge Working Day Schedule 12.4-5
12.4.8 Reviewing Projects Prepared by Consultants 12.4-5
12.4.9 Submitting the PS&E Package 12.4-6
12.4.10 PS&E Review Period and Turn-in for AD Copy 12.4-7

Appendix 12.1-A1 Not Included In Bridge Quantities List 12.1-A1-1
Appendix 12.2-A1 Bridge Quantities 12.2-A1-1
Appendix 12.3-A1 Structural Estimating Aids Construction Costs 12.3-A1-1
Appendix 12.3-A2 Structural Estimating Aids Construction Costs 12.3-A2-1
Appendix 12.3-A3 Structural Estimating Aids Construction Costs 12.3-A3-1
Appendix 12.3-A4 Structural Estimating Aids Construction Costs 12.3-A4-1
Appendix 12.4-A1 Special Provisions Checklist 12.4-A1-1
Appendix 12.4-A2 Structural Estimating Aids Construction Time Rates 12.4-A2-1
Appendix 12.3-B1 Cost Estimate Summary 12.3-B1-1
Appendix 12.4-B1 Construction Working Day Schedule 12.4-B1-1

Chapter 13 Bridge Load Rating

13.1 General 13.1-1
13.1.1 LRFR Method per the MBE 13.1-2
13.1.2 Load Factor Method (LFR) 13.1-4
13.1.3 Allowable Stress Method (ASD) 13.1-6
13.1.4 Live Loads 13.1-7
13.1.5 Rating Trucks 13.1-7

13.2 Special Rating Criteria 13.2-1
13.2.1 Dead Loads 13.2-1
13.2.2 Live Load Distribution Factors 13.2-1
13.2.3 Reinforced Concrete Structures 13.2-1
13.2.4 Prestresed Concrete Structures 13.2-1
13.2.4 Concrete Decks 13.2-1
13.2.5 Concrete Crossbeams 13.2-1
13.2.6 In-Span Hinges. 13.2-1
13.2.7 Girder Structures 13.2-2
13.2.8 Box Girder Structures 13.2-2
13.2.9 Segmental Concrete Bridges 13.2-2
13.2.10 Concrete Slab Structures 13.2-2
13.2.11 Steel Structures 13.2-2
13.2.12 Steel Floor Systems 13.2-2
13.2.13 Steel Truss Structures 13.2-2
13.2.14 Timber Structures 13.2-3
13.2.15 Widened or Rehabilitated Structures. 13.2-3

13.3 Load Rating Software 13.3-1

13.4 Load Rating Reports 13.4-1

13.99 References 13.99-1

Appendix 13.4-A1 LFR Bridge Rating Summary 13.4-A1-1
Appendix 13.4-A2 LRFR Bridge Rating Summary 13.4-A2-1

Chapter 1 General Information Contents

1.1 Manual Description 1.1-1
1.1.1 Purpose 1.1-1
1.1.2 Specifications 1.1-1
1.1.3 Format 1.1-1
1.1.4 Revisions 1.1-3

1.2 Bridge and Structures Office Organization 1.2-1
1.2.1 General 1.2-1
1.2.2 Organizational Elements of the Bridge Office 1.2-1
1.2.3 Design Unit Responsibilities and Expertise 1.2-4

1.3 Quality Control/Quality Assurance (QC/QA) Procedure 1.3-1
1.3.1 General 1.3-1
1.3.2 Design/Check Procedures 1.3-2
1.3.3 Design/Check Calculation File 1.3-10
1.3.4 PS&E Review Period 1.3-11
1.3.5 Addenda 1.3-11
1.3.6 Shop Plans and Permanent Structure Construction Procedures 1.3-11
1.3.7 Contract Plan Changes (Change Orders and As-Builts) 1.3-14
1.3.8 Archiving Design Calculations, Design Files, and S&E Files 1.3-15
1.3.9 Public Disclosure Policy Regarding Bridge Plans 1.3-16
1.3.10 Use of Computer Software 1.3-17

1.4 Coordination With Other Divisions and Agencies 1.4-1
1.4.1 Preliminary Planning Phase 1.4-1
1.4.2 Final Design Phase 1.4-1

1.5 Bridge Design Scheduling 1.5-1
1.5.1 General 1.5-1
1.5.2 Preliminary Design Schedule 1.5-1
1.5.3 Final Design Schedule 1.5-1

1.6 Guidelines for Bridge Site Visits 1.6-1
1.6.1 Bridge Rehabilitation Projects 1.6-1
1.6.2 Bridge Widening and Seismic Retrofits 1.6-1
1.6.3 Rail and Minor Expansion Joint Retrofits 1.6-1
1.6.4 New Bridges 1.6-1
1.6.5 Bridge Demolition 1.6-1
1.6.6 Proximity of Railroads Adjacent to the Bridge Site 1.6-2

1.99 References 1.99-1

Appendix 1.1-A1 Bridge Design Manual Revision QA/QC Worksheet 1.1-A1-1
Appendix 1.5-A1 Breakdown of Project Manhours Required Form 1.5-A1-1
Appendix 1.5-A2 Monthly Project Progress Report Form 1.5-A2-1
Appendix 1.5-A3 QA/QC Signature Sheet 1.5-A3-1
Appendix 1.5-A4 Bridge & Structures Design Calculations 1.5-A4-1

Chapter 1 General Information

1.1 Manual Description

1.1.1 Purpose

The *Bridge Design Manual* (BDM) M 23-50 is a guide for those who design bridges for the Washington State Department of Transportation (WSDOT). This manual supplements the AASHTO LRFD Specifications. It explains differences where it deviates from the AASHTO LRFD Specifications. It contains standardized design details and methods, which are based on years of experience.

The *Bridge Design Manual* is a dynamic document, which constantly changes because of the creativity and innovative skills of our bridge designers and structural detailers. It is not intended for the design of unusual structures or to inhibit the designer in the exercise of engineering judgment. There is no substitute for experience, good judgment, and common sense.

1.1.2 Specifications

This manual and the following AASHTO Specifications are the basic documents used to design highway bridges and structures in Washington State:

- AASHTO LRFD Bridge Design Specifications (AASHTO LRFD)
- AASHTO Guide Specifications for LRFD Seismic Bridge Design (AASHTO SEISMIC)

The *Bridge Design Manual* is not intended to duplicate the AASHTO Specifications. This manual supplements the AASHTO Specifications by providing additional direction, design aides, examples, and information on office practice. The *Bridge Design Manual* takes precedence where conflict exists with the AASHTO Specifications. The WSDOT Bridge Design Engineer will provide guidance as necessary.

References are listed at the end of each chapter.

1.1.3 Format

A. **General –** The Bridge Design Manual consists of one volume with each chapter organized as follows:

Criteria or other information (printed on white paper)

Appendix A (printed on yellow paper) Design Aids

Appendix B (printed on salmon paper) Design Examples

B. **Chapters**

1. General Information
2. Preliminary Design
3. Loads
4. Seismic Design and Retrofit
5. Concrete Structures
6. Steel Design
7. Substructure
8. Walls and Buried Structures
9. Bearings and Expansion Joints

10. Traffic Barriers, Sign Structures, Approach Slabs, Utility Supports
11. Detailing Practice
12. Quantities, Construction Costs, and Specifications
13. Bridge Rating

C. **Numbering System**

1. The numbering system for the criteria consists of a set of numbers followed by letters as required to designate individual subjects.

   Example:

   Chapter 5 Concrete Structures (Chapter)

   5.3 Reinforced Concrete Box Girder Bridges (Section)

   5.3.2 Reinforcement (Subsection)

   A. Top Slab Reinforcement

      1. Near Center of Span

         a. Transverse Reinforcement

2. **Numbering of Sheets –** Each section starts a new page numbering sequence. The page numbers are located in the lower outside corners and begin with the chapter number, followed by the section number, then a sequential page number.

   Example: 5-1, 5-2, etc.

3. **Appendices** – Appendices are included to provide the designer with design aids (Appendix A) and examples (Appendix B). Design aids are generally standard in nature, whereas examples are modified to meet specific job requirements.

   An appendix is numbered using the chapter followed by section number and then a hyphen and the letter of the appendix followed by consecutive numbers.

   Example: 5.3-A1 (Box Girder Bridges) designates a design aid required or useful to accomplish the work described in Chapter 5, Section 3.

4. **Numbering of Tables and Figures –** Tables and figures shall be numbered using the chapter, section, subsection in which they are located, and then a hyphen followed by consecutive numbers.

   Example: Figure 5.3.2-1 is the first figure found in Chapter 5, section 3, subsection 2.

1.1.4 Revisions

Revisions to this manual are related to emerging concepts, new state or federal legislation, and comments forwarded to the Bridge Design Office. Some revisions are simple spot changes, while others are major chapter rewrites. The current version of the manual is available online at: www.wsdot.wa.gov/publications/manuals/m23-50.htm.

All pages include a revision number and publication date. When a page is revised, the revision number and publication date are revised. Revisions shall be clearly indicated in the text.

The process outlined below is followed for *Bridge Design Manual* revisions:

1. Revisions are prepared, checked and coordinated with chapter authors.
2. Revisions are submitted to the Bridge Design Engineer for approval. However, comments related to grammar and clarity can be sent directly to the BDM Coordinator without Bridge Design Engineer approval.
3. After approval from the Bridge Design Engineer, the BDM Coordinator works with WSDOT Engineering Publications to revise the manual.
4. Revised pages from Engineering Publications are checked for accuracy and corrected if necessary.
5. A Publication Transmittal is prepared by Engineering Publications. Publication Transmittals include remarks and instructions for updating the manual. After the Publications Transmittal has been signed by the State Bridge and Structures Engineer, Engineering Publications will post the complete manual and revision at: www.wsdot.wa.gov/publications/manuals/m23-50.htm.
6. Engineering Publications will coordinate electronic and hard copy distributions.

A Revision QA/QC Worksheet (see Appendix 1.1-A1) shall be prepared to document and track the revision process.

1.2 Bridge and Structures Office Organization

1.2.1 General

The responsibilities of the Bridge and Structures Office are:

Provides structural engineering services for WSDOT. Provides technical advice and assistance to other governmental agencies on such matters.

The WSDOT *Design Manual* M 22-01 states the following:

Bridge design is the responsibility of the Bridge and Structures Office in Olympia. Any design authorized at the Region level is subject to review and approval by the Bridge and Structures Office.

1.2.2 Organizational Elements of the Bridge Office

A. **Bridge and Structures Engineer –** The Bridge and Structures Engineer is responsible for structural engineering services for the department and manages staff and programs for structural design, contract plan preparation, inspections and assessments of existing bridges.

B. **Bridge Design Engineer –** The Bridge Design Engineer is directly responsible to the Bridge and Structures Engineer for structural design and review, and advises other divisions and agencies on such matters.

1. **Structural Design Units –** The Structural Design Units are responsible for the final design of bridges and other structures. Final design includes preparation of contract plans. The units provide special design studies, develop design criteria, check shop plans, and review designs submitted by consultants. Frequently, the Bridge Projects Engineer assigns the units the responsibility for preparing preliminary bridge plans and other unscheduled work.

   The Bridge Engineer Supervisor (Unit Supervisor) provides day-to-day leadership, project workforce planning, mentoring, and supervision for the design unit. Organization and job assignments within the unit are flexible and depend on projects underway at any particular time as well as the qualifications and experience level of individuals. The primary objective of the design units is to produce contract plans for bridges and structures within scope, schedule and budget. This involves designing, checking, reviewing, and detailing in an efficient and timely manner.

   A bridge specialist is assigned to each design unit. Each specialist has a particular area of expertise. The four major areas are: concrete, steel, seismic design, and retrofit and expansion joints and bearings. The specialists act as a resource for the bridge office in their specialty and are responsible for keeping up-to-date on current AASHTO criteria, new design concepts and products, technical publications, construction and maintenance issues, and are the primary points of contact for industry representatives.

   The design units are also responsible for the design and preparation of contract plans for modifications to bridges in service. These include bridge rail replacement, deck repair, seismic retrofits, emergency repairs when bridges are damaged by vehicle or ship collision or natural phenomenon, and expansion joint and drainage retrofits. They review proposed plans of utility attachments to existing bridges.

2. **Bridge Projects Unit –** The Bridge Projects Engineer directs preliminary design work, specification and cost estimates preparation, falsework review, project scoping, coordinates scheduling of bridge design projects and unscheduled work assignments with the Region Project Development Engineers, Bridge Design Engineer, and the Unit Supervisors.

   The Preliminary Plan Engineers are responsible for bridge project planning from initial scoping to design type, size, and location (TSL) studies and reports. They are responsible for preliminary plan preparation of bridge and walls including assembly and analysis of site data, preliminary structural analysis, cost analysis, determination of structure type, and drawing preparation.

They also check preliminary plans prepared by others, review highway project environmental documents and design reports, and prepare U. S. Coast Guard Permits.

The Specifications and Estimate (S&E) Engineers develop and maintain construction specifications and cost estimates for bridge projects. They also develop specifications and cost estimates for bridge contracts prepared by consultants and other government agencies, which are administered by WSDOT. They assemble and review the completed bridge PS&E before submittal to the Regions. They also coordinate the PS&E preparation with the Regions and maintain bridge construction cost records.

The Construction Support Unit Engineers are responsible for checking the contractor's falsework, shoring, and forming plans. Shop plan review and approval are coordinated with the design units. Actual check of the shop plans is done in the design unit. Field requests for plan changes come through this office for a recommendation as to approval.

The Bridge Plans Engineer processes as-built plans in this unit. Region Project Engineers are responsible for preparing and submitting as-built plans at the completion of a contract.

The Scheduling Engineer monitors the design work schedule for the Bridge and Structures Office, updates the Bridge Design Schedule (BDS) and maintains records of bridge contract costs. Other duties include coordinating progress reports to Regions by the Unit Supervisors and S&E Engineers through the Project Delivery Information System (PDIS).

The Bridge Projects Unit dedicates one position to providing technical assistance for the design and detailing of expansion joint, bridge bearing and barrier/rail projects.

In addition, the unit is responsible for updating the *Bridge Design Manual* M 23-50. The unit coordinates changes to the WSDOT Standard Specifications and facilitates updates or revisions to WSDOT Bridge Office design standards.

3. **Mega Project Bridge Manager –** The Mega Project Bridge Manager provides leadership, guidance and project management responsibilities for various complex, unique and monumental bridge design and construction projects. Mega Bridge Projects are defined as suspension, cable-stayed, movable, segmental or a complex group of interchange/corridor bridges and include conventional and design-build project delivery methods. The Mega Project Bridge Manager represents the Bridge and Structures Office in Cost Estimate Validation Process activities, Value Engineering Studies and Research Projects regarding major bridge projects.

C. **Bridge Preservation Engineer –** The Bridge Preservation Engineer directs activities and develops programs to assure the structural and functional integrity of all state bridges in service. The Bridge Preservation Engineer directs emergency response activities when bridges are damaged.

1. **Bridge Preservation Office (BPO) –** The Bridge Preservation Office is responsible for planning and implementing an inspection program for the more than 3,200 fixed and movable state highway bridges. In addition, BPO provides inspection services on some local agency bridges and on the state's ferry terminals. All inspections are conducted in accordance with the National Bridge Inspection Standards (NBIS).

   BPO maintains the computerized Washington State Bridge Inventory System (WSBIS) of current information on more than 7,300 state, county, and city bridges in accordance with the NBIS. This includes load ratings for all bridges. BPO prepares a *Bridge List* of the state's bridges, which is published every two years, maintains the intranet-based Bridge Engineering Information System (BEIST), and prepares the annual Recommended Bridge Repair List (RBRL) based on the latest inspection reports.

   BPO is responsible for the bridge load rating and risk reduction (SCOUR) programs. It provides damage assessments and emergency response services when bridges are damaged because of vehicle or ship collision or natural phenomenon such as: floods, wind, or earthquakes.

D. **Bridge Management Engineer –** The Bridge Management Unit is responsible for the program development, planning and monitoring of all statewide bridge program activities. These include P2 funded bridge replacements and rehabilitation, bridge deck protection, major bridge repair, and bridge painting.

   In addition, the Bridge Management Unit manages the bridge deck protection, deck testing and the bridge research programs. It is responsible for the planning, development, coordination, and implementation of new programs (e.g., Seismic Retrofit and Preventative Maintenance), experimental feature projects, new product evaluation, and technology transfer.

   The Bridge Management Engineer is the Bridge and Structures Office's official Public Disclosure contact. (See Section 1.3.9 Public Disclosure Policy Regarding Bridge Plans).

E. **Computer Support Unit –** The Computer Support Unit is responsible for computer resource planning and implementation, computer user support, liaison with Management Information Systems (MIS), computer aided engineer operation support, and software development activities. In addition, the unit works closely with the Bridge Projects Unit in updating this manual and *Standard Plans*.

F. **Consultant Liaison Engineer –** The Consultant Liaison Engineer prepares bridge consultant agreements and coordinates consultant PS&E development activities with those of the Bridge Office. The Consultant Liaison Engineer negotiates bridge design contracts with consultants.

G. **State Bridge and Structures Architect –** The State Bridge and Structures Architect is responsible for reviewing and approving bridge preliminary plans, retaining walls, preparing renderings, coordinating aesthetic activities with Regions (i.e. suggesting corridor themes and approving public art), and other duties to improve the aesthetics of our bridges and structures. The State Bridge and Structures Architect works closely with bridge office and region staff. During the design phase, designers should get the Architect's approval for any changes to architectural details shown on the approved preliminary plan.

H. **Staff Support Unit –** The Staff Support Unit is responsible for many support functions, such as: typing, timekeeping, payroll, receptionist, vehicle management, mail, inventory management, and other duties requested by the Bridge and Structures Engineer. Other duties include: filing field data, plans for bridges under contract or constructed, and design calculations. This unit also maintains office supplies and provides other services.

I. **Office Administrator –** The Office Administrator is responsible for coordinating personnel actions, updating the organizational chart, ordering technical materials, and other duties requested by the Bridge and Structures Engineer. Staff development and training are coordinated through the Office Administrator. The Office Administrator also handles logistical support, office and building maintenance issues.

1.2.3 Design Unit Responsibilities and Expertise

The following is an updated summary of the structural design, review and plan preparation responsibilities/expertise within the Bridge Design Section. Contact the Unit Supervisor for the name of the appropriate staff expert for the needed specialty.

Unit Supervisor	Responsibility/Expertise
Mark Anderson	Seismic Design Technical Support Emergency Slide Repairs Retaining Walls (including Structural Earth, Soldier Pile and Tie-Back, Geosynthetic, and Soil Nail) Pre-Approval of Retaining Wall Systems Noise Barrier Walls
Richard Stoddard	Bridge Traffic Barriers and Rail Retrofits Concrete Design Technical Support
Ron Lewis	Coast Guard Permits Special Provisions and Cost Estimates Preliminary Design Falsework, Forming and Temporary Structures *Bridge Design Manual* M 23-50 Bridge Projects Scheduling
Richard Zeldenrust	Overhead and Bridge-Mounted Sign Structures Light Standard & Traffic Signal Supports Repairs to Damaged Bridges Structural Steel Technical Support
Patrick Clarke	Floating Bridges Bearings and Expansion Joints Technical Support Special Structures
DeWayne Wilson	Bridge Preservation Program (P2 Funds) – Establish needs and priorities (including Seismic, Scour, Deck Overlay, Special Repairs, Painting, Replacement, Misc Structures Programs) Bridge Management System Bridge Engineering Software and CAD Consultant Liaison
Tim Moore	Mega Projects Manager
Paul Kinderman	Bridge Architect

1.3 Quality Control/Quality Assurance (QC/QA) Procedure

1.3.1 General

A. The purpose of the QC/QA procedure is to improve the quality of the structural designs and plans. The key element to the success of this process is effective communication between all parties. The goals of the QC/QA procedure are:

- Designed structures that improve public safety and meet state regulations.
- Designed structures which meet the requirements of the WSDOT *Bridge Design Manual* M 23-50, AASHTO LRFD Bridge Design Specifications, current structural engineering practices, and geometric criteria provided by the Region.
- Designed structures that are aesthetically pleasing, constructible, durable, economical, inspectable, and require little maintenance.
- Design contract documents that meet the customer's needs, schedule, budget, and construction staging requirements.
- Structural design costs are minimized.
- An organized and indexed set of design calculations are produced. Design criteria and assumptions are included in the front after the index.
- Plan quality is maximized.
- The QA/QC procedure allows for change, innovation, and continuous improvement.

The goals are listed in order of importance. If there is a conflict between goals, the more important goal takes precedence.

The Unit Supervisor determines project assignments and the QC/QA process to be used in preparation of the structural design. The intent of the QC/QA process is to facilitate plan production efficiency and cost-effectiveness while assuring the structural integrity of the design and maximizing the quality of the structural contract documents.

B. The Bridge and Structures Office QC/QA procedure is a component of the general WSDOT template for project management process. Included as part of the current WSDOT project management process are project reviews at specific milestones along the project timeline. The expected content of the documents being reviewed at each specific milestone are described in the Deliverable Expectations Matrix developed and implemented by the WSDOT Design Office in May 2006. This matrix can be viewed via the link www.wsdot.wa.gov/projects/projectmgmt/online_guide/delivery_expectation_matrix/de_matrix.pdf.

The overall matrix is generic for WSDOT design, but there is a line in the matrix that outlines the specific content expectations for structures (bridges retaining walls, noise barrier walls, overhead sign structures, etc.). This "structures specific" matrix line includes a link to a separate matrix. This structures matrix can be viewed via the link www.wsdot.wa.gov/projects/projectmgmt/online_guide/delivery_expectation_matrix/bridge.pdf.

The Bridge Preliminary Plan as described in Chapter 2 is equivalent to the Geometric Review milestone of the generic WSDOT matrix and the Permitting Submittal Review milestone of the structure specific matrix.

Intermediate stage constructability reviews conducted for certain projects by Region Design PE Offices or Local Agencies are equivalent to the General Plans Review milestone of the generic WSDOT matrix and the Intermediate PS&E Submittal Review milestone of the structure specific matrix.

The Bridge Plans turn-in as described in Section 12.4.3 is equivalent to the Preliminary Contract Review milestone of the generic WSDOT matrix and the PS&E Pre-submittal Review milestone of the structure specific matrix.

The Bridge PS&E turn-in as described in Section 12.4.3 is equivalent to the Final Contract Review milestone of the generic WSDOT matrix and the Final PS&E Submittal Review milestone of the structure specific matrix.

1.3.2 Design/Check Procedures

A. PS&E Prepared by WSDOT Bridge and Structures Office

1. **Design Team –** The design team usually consists of the Designer(s), Checker(s), Structural Detailer(s), and a Specification and Estimate Engineer, who are responsible for preparing a set of contract documents on or before the scheduled due date(s) and within the budget allocated for the project. On large projects, the Unit Supervisor may designate a designer to be a Project Coordinator with additional duties, such as: assisting the supervisor in communicating with the Region, coordinating and communicating with the Geotechnical Branch, and monitoring the activities of the design team.

   The QC/QA procedures may vary depending on the type and complexity of the structure being designed, and the experience level of the design team members. More supervision, review, and checking may be required when the design team members are less experienced. In general, it is a good practice to have some experienced designers on every design team. All design team members should have the opportunity to provide input to maximize the quality of the design plans.

2. **Designer Responsibility –** The designer is responsible for the content of the contract plan sheets, including structural analysis, completeness and correctness. A good set of example plans, which is representative of the bridge type, is indispensable as an aid to less experienced designers and detailers.

   During the design phase of a project, the designer will need to communicate frequently with the Unit Supervisor and other stakeholders. This includes acquiring, finalizing or revising roadway geometrics, soil reports, hydraulics recommendations, and utility requirements. Constructability issues may also require that the designer communicate with the Region or Construction Office. The designer may have to organize face-to-face meetings to resolve constructability issues early in the design phase. The bridge plans must be coordinated with the PS&E packages produced concurrently by the Region.

   The designer shall advise the Unit Supervisor as soon as possible of any scope and project cost increases and the reasons for the increases. The Unit Supervisor will then notify the Region project office if the delivery schedule will have to be changed. If Region concurs with a change in the delivery date, the Unit Supervisor will notify the Bridge Projects Engineer or the Bridge Scheduling Engineer of the revised delivery dates.

   The designer or Project Coordinator is responsible for project planning which involves the following:

   a. Determines scope of work, identifies tasks and plans order of work.

   b. Prepare design criteria that are included in the front of the design calculations. Compares tasks with BDM office practice and AASHTO bridge design specifications.

      (1) Insures that design guidelines are sufficient?

      (2) Justification for deviation from *Bridge Design Manual*/AASHTO?

(3) Justification for design approach?

(4) Justification for deviation from office practices regarding design and details?

(5) Other differences.

c. Meet with the Region design staff and other project stakeholders early in the design process to resolve as many issues as possible before proceeding with final design and detailing.

d. Identify coordination needs with other designers, units, and offices.

e. Early in the project, the bridge sheet numbering system should be coordinated with the Region design staff. For projects with multiple bridges, each set of bridge sheets should have a unique set of bridge sheet numbers.

f. At least monthly or as directed by the design Unit Supervisor:

(1) Update Project Schedule and List of Sheets.

(2) Estimate percent complete.

(3) Estimate time to complete.

(4) Work with Unit Supervisor to adjust resources, if necessary.

g. Develop preliminary quantities for all cost estimates after the Preliminary Plan stage.

h. Near end of project:

(1) Develop quantities, *Not Included in Bridge Quantity List, and Special Provisions Checklist* that are to be turned in with the plans. (See Section 12.4.4).

(2) Prepare the Bar List.

(3) Coordinate all final changes, including review comments received from the Bridge Specifications and Estimates Engineer. Refer to Section 12.4.3 (B).

(4) Meet with Region design staff and other project stakeholders at the constructability review/round table review meetings to address final project coordination issues.

The designer should inform the Unit Supervisor of any areas of the design, which should receive special attention during checking and review.

(5) Prepare the QA/QC Checklist, and obtain signatures/initials as required. This applies to all projects regardless of type or importance (bridges, walls, sign structures, overlay, traffic barrier, etc.). Refer to Appendix 1.5-A3-1.

The design calculations are prepared by the designer and become a very important record document. Design calculations will be a reference document during the construction of the structure and throughout the life of the structure. It is critical that the design calculations be user friendly. The design calculations shall be well organized, clear, properly referenced, and include numbered pages along with a table of contents. The design calculations shall be archived. Computer files should be archived for use during construction, in the event that changed conditions arise. Archive-ready design and check calculations shall be bound and submitted to the Unit Supervisor concurrently with the turn-in of the Bridge PS&E submittal. Calculations shall be stored in the design unit until completion of construction. After construction, they shall be sent to archives. (See Section 1.3.8 Archiving Design Calculations, Design Files, and S&E Files).

The designer or another assigned individual is also responsible for resolving construction problems referred to the Bridge Office during the life of the contract. These issues will generally be referred through the Bridge Technical Advisor, the Unit Supervisor, the Construction Support Unit, or the HQ Construction-Bridge.

3. **Checker Responsibility –** The checker is responsible to the Unit Supervisor for "quality assurance" of the structural design, which includes checking the design, plans and specifications to assure accuracy and constructability. The Unit Supervisor works with the checker to establish the level of checking required. The checking procedure for assuring the quality of the design will vary from project to project. Following are some general checking guidelines:

   a. **Design Calculations –** may be checked by either of two methods:

      (1) Design calculations may be checked with a line-by-line review and initialing by the checker. If it is more efficient, the checker may choose to perform his/her own independent calculations.

      (2) Iterative design methods may be best checked by review of the designer's calculations, while standard and straight-forward designs may be most efficiently checked with independent calculations. All the designer and checker calculations shall be placed in one design set.

      (3) Revision of design calculations, if required, is the responsibility of the designer.

   b. **Structural Plans**

      (1) The checker's plan review comments are recorded on a copy of the structural plans, including details and bar lists, and returned to the designer for consideration. These check prints are a vital part of the checking process, and shall be preserved. If the checker's comments are not incorporated, the designer should provide justification for not doing so. If there is a difference of opinion that cannot be resolved between the designer and checker, the Unit Supervisor shall resolve any issues. Check prints shall be submitted to the Unit Supervisor at the time of 100% PS&E turn-in.

      (2) If assigned by the Unit Supervisor, a structural detailer shall perform a complete check of the geometry using CADD or hand calculations.

      (3) Revision of plans, if required, is the responsibility of the designer.

   c. **Quantities and Barlist**

      (1) The checker shall provide an independent set of quantity calculations. These together with the designer's quantity calculations shall be placed in the job file.

      (2) Resolution of differences between the designer and checker shall be completed before the Bridge PS&E submittal. The checker shall also check the barlist.

4. **Structural Detailer Responsibility –** The structural detailer is responsible for the quality and consistency of the contract plan sheets. The structural detailer shall ensure that the Bridge Office drafting standards as explained in Chapter 11 of this manual are upheld.

   a. Refer to Chapter 11, for detailing practices.

   b. Provide necessary and adequate information to ensure the contract plans are accurate, complete, and readable.

   c. Detail plan sheets in a consistent manner and follow accepted detailing practices.

   d. Check plans for geometry, reinforcing steel congestion, consistency, and verify control dimensions.

e. Check for proper grammar and spelling.

f. On multiple bridge contracts, work with the Designer/Project Coordinator to ensure that the structural detailing of all bridges within the contract shall be coordinated to maximize consistency of detailing from bridge to bridge. Extra effort will be required to ensure uniformity of details, particularly if multiple design units and/or consultants are involved in preparing bridge plans.

g. Maintain an ongoing understanding of bridge construction techniques and practices.

5. **Specialist Responsibility –** There are currently four specialist positions in the Bridge and Structures Office. The four specialty areas in the Design Section are bearings and expansion joints, concrete (including prestressed concrete), seismic retrofit and design, and structural steel.

   The primary responsibility of the specialist is to act as a knowledge resource for the Bridge and Structures Office. The Specialists maintain an active knowledge of their specialty area along with a current file of products and design procedures. The Specialists maintain industry contacts. Specialists also provide training in their area of specialty.

   Specialists are expected to remain engaged with the design efforts being carried out in the office related to their specialty. At the discretion of the Design Unit Supervisor, the Specialists may be requested to review, comment on and initial plans in their area of expertise prepared by other designers.

   Specialists also assist the Bridge and Structures Engineer in reviewing and voting on amendments to AASHTO specifications. In addition they are responsible for keeping their respective chapters of the *Bridge Design Manual* M 23-50 up to date.

   A secondary responsibility of the Specialist is to serve as Unit Supervisor when the supervisor is absent.

6. **Specification and Estimating Engineer Responsibilities –** The S&E Engineer is responsible for compiling the PS&E package for bridge and/or related highway structural components. This PS&E package includes Special Provisions (Bridge Special Provisions or BSPs and General Special Provisions or GSPs as appropriate), construction cost estimate, construction working day schedule, test hole boring logs and other appendices as appropriate, and the design plan package. The S&E Engineer is also responsible for soliciting, receiving, compiling and turning over to the designer all review comments received after the Bridge Plans turn-in. It is imperative that all review comments are channeled through the S&E Engineer to ensure consistency between the final bridge plans, specifications and estimate.

   For a detailed description of the S&E Engineer's responsibilities, see Section 12.4.

7. **Design Unit Supervisor Responsibility**

   a. The Unit Supervisor is responsible to the Bridge Design Engineer for the timely completion and quality of the bridge plans.

   b. The Unit Supervisor works closely with the Project Coordinator and the design team (designer, checker, and structural detailer) during the design and plan preparation phases to help avoid major changes late in the design process. Activities during the course of design include:

      (1) Evaluate the complexity of the project and the designer's skill and classification level to deliver the project in a timely manner. Determine both the degree of supervision necessary for the designer and the amount of checking required by the checker.

      (2) Assist the design team in defining the scope of work, identifying the tasks to be accomplished and developing a project work plan.

(3) Make suitable staffing assignments and develop a design team time estimate to ensure that the project can be completed on time and within budget.

(4) Review and approve design criteria before start of design.

(5) Help lead designer conduct face-to-face project meetings, such as: project "kick-off" and "wrap-up" meetings with Region, geotechnical staff, bridge construction, and consultants to resolve outstanding issues.

(6) Participate in coordinating, scheduling, and communicating with stakeholders, customers, and outside agencies relating to major structural design issues.

(7) Facilitate resolution of major project design issues.

(8) Assist the design team with planning, anticipating possible problems, collectively identifying solutions, and facilitating timely delivery of needed information, such as geometrics, hydraulics, foundation information, etc.

(9) Interact with design team regularly to discuss progress, problems, schedule and budget, analysis techniques, constructability and design issues. Always encourage forward thinking, innovative ideas and suggestions for quality improvement.

(10) Arrange for and provide the necessary resources, time and tools for the design team to do the job right the first time. Offer assistance to help resolve questions or problems.

(11) Help document and disseminate information on special features and lessons learned for the benefit of others and future projects.

(12) Mentor and train designers and detailers through the assignment of a variety of structure types.

c. The Unit Supervisor works closely with the design team during the plan review phase. Review efforts should concentrate on reviewing the completed plan details and design calculations for completeness and for agreement with office criteria and office practices. Review the following periodically and at the end of the project:

(1) Design Criteria

- Seismic design methodology, acceleration coefficient ("a" value), and any seismic analysis assumptions.
- Foundation report recommendations, selection of alternates.
- Deviations from AASHTO, this manual, and proper consideration of any applicable Design Memorandums.

(2) Design Time and Budget

d. Estimate time to complete the project. Plan resource allocation for completing the project to meet the scheduled Ad Date and budget. Monitor monthly time spent on the project.

At the end of each month, estimate time remaining to complete project, percent completed, and whether project is on or behind schedule.

Plan and assign workforce to ensure a timely delivery of the project within the estimated time and budget. At monthly supervisors' scheduling meetings, notify the Bridge Projects Engineer if a project is behind schedule.

e. Advise Region of any project scope creep and construction cost increases. As a minimum, use quarterly status reports to update Region on project progress.

f. Use appropriate computer scheduling software or other means to monitor time usage, to allocate resources, and to plan projects.

g. Review constructability issues. Are there any problems unique to the project?

h. Review the final plans for the following:

(1) Scan the job file for unusual items relating to geometrics, hydraulics, geotechnical, environmental, etc.

(2) Overall review of sheet #1, the bridge layout for:

- Consistency — especially for multiple bridge project
- Missing information

(3) Review footing layout for conformance to Bridge Plan and for adequacy of information given. Generally, the field personnel shall be given enough information to "layout" the footings in the field without referring to any other sheets. Plan details shall be clear, precise, and dimensions tied to base references, such as: a survey line or defined centerline of bridge.

(4) Review the sequence of the plan sheets. The plan sheets should adhere to the following order: layout, footing layout, substructures, superstructures, miscellaneous details, barriers, and barlist. Also check for appropriateness of the titles.

(5) Review overall dimensions and elevations, spot check for compatibility. For example, check compatibility between superstructures and substructure. Also spot check bar marks.

(6) Use common sense and experience to review structural dimensions and reinforcement for structural adequacy. When in doubt, question the designer and checker.

i. Stamp and sign the plans in blue ink.

8. **Bridge Design Engineer's Responsibilities –** The Bridge Design Engineer is the coach, mentor, and facilitator for the WSDOT QC/QA Bridge Design Procedure. The leadership and support provided by this position is a major influence in assuring bridge design quality for structural designs performed by both WSDOT and consultants. The following summarizes the key responsibilities of the Bridge Design Engineer related to QC/QA:

a. Prior to the Bridge Design Engineer stamping and signing any plans, he/she shall perform a structural/constructability review of the plans. This is a quality assurance (QA) function as well as meeting the "responsible charge" requirements of state laws relating to Professional Engineers.

b. Review and approve the Preliminary Bridge Plans. The primary focus for this responsibility is to assure that the most cost-effective and appropriate structure type is selected for a particular bridge site.

c. Review unique project special provisions and Standard Specification modifications relating to structures.

d. Facilitate partnerships between WSDOT, consultants, and the construction industry stakeholders to facilitate and improve design quality.

e. Encourage designer creativity and innovation through forward thinking.

f. Exercise leadership and direction for maintaining a progressive and up to date *Bridge Design Manual* M 23-50.

g. Create an open and supportive office environment in which Design Section staff are empowered to do high quality structural design work.

h. Create professional growth opportunities through an office culture where learning is emphasized.

i. Encourage continuing professional development through training opportunities, attendance at seminars and conferences, formal education opportunities, and technical writing.

9. **General Bridge Plan Stamping and Signature Policy –** The stamping and signing of bridge plans is the final step in the Bridge QC/QA procedure. It signifies a review of the plans and details by those in responsible charge for the bridge plans. At least one Licensed Structural Engineer shall stamp and sign each contract plan sheet (except the bar list).

   For contract plans prepared by a licensed Civil or Licensed Structural Engineer, the Unit Manager and the licensed Civil or Licensed Structural Engineer co-seal and sign the plans, except the bridge layout sheet. The bridge layout sheet is sealed and signed by the State Bridge and Structures Engineer or, in the absence of the State Bridge and Structures Engineer, the Bridge Design Engineer.

   For contract plans not prepared by a licensed Civil or Licensed Structural Engineer, the Unit Manager and the Bridge Design Engineer co-seal and sign the plans except the bridge layout sheet. The bridge layout sheet is sealed and signed by the State Bridge and Structures Engineer or, in the absence of the State Bridge and Structures Engineer, the Bridge Design Engineer.

   For Non-Standard Retaining Walls and Noise Barrier Walls, Sign Structures, Seismic Retrofits, Expansion Joint and Bearing Modifications, Traffic Barrier and Rail Retrofits, and other special projects, the Unit Manager with either the licensed designer or the Bridge Design Engineer (if the designer is not licensed) co-seal and sign the plans except for the layout sheet. The layout sheets for these plans are sealed and signed by the State Bridge and Structures Engineer, or in the absence of the State Bridge and Structures Engineer, the Bridge Design Engineer.

B. **Consultant PS&E — Projects on WSDOT Right of Way –** PS&E prepared by consultants will follow a similar QC/QA procedure as that shown above for WSDOT prepared PS&E's and, as a minimum, shall include the following elements:

1. **WSDOT Consultant Liaison Engineer's Responsibilities**

   a. Review scope of work.

   b. Negotiate contract and consultant's Task Assignments.

   c. Coordinate/Negotiate Changes to Scope of Work.

2. **Bridge Scheduling Engineer Responsibilities**

   a. Add review to the bridge schedule.

   b. Assign review to a bridge unit supervisor.

   c. Make 2 copies of the review plans and specifications – 1 for the design reviewer and 1 for the Specifications Engineer Reviewer

   d. Make a copy of the Layout for the Bridge Inventory Engineer.

3. **WSDOT Design Reviewer's or Coordinator's Responsibilities**

   a. Early in the project, review consultant's design criteria, and standard details for consistency with WSDOT practices and other bridge designs in project.

   b. Review the job file as prepared by the Preliminary Plan Engineer.

   c. Identify resources needed to complete work.

d. Initiate a project start-up meeting with the Consultant to discuss design criteria, submittal schedule and expectations, and also to familiarize himself/herself with the Consultant's designers.

e. Reach agreement early in the design process regarding structural concepts and design methods to be used.

f. Identify who is responsible for what and when all intermediate constructability, Bridge Plans, and Bridge PS&E review submittals are to be made.

g. Monitor progress.

h. Facilitate communication, including face-to-face meetings.

i. Verify that the Consultant's design has been checked by the Consultant's checker at the 100% submittal. The checker's calculations should be included in the designer's calculation set.

j. Review consultant's design calculations and plans for completeness and conformance to Bridge Office design practice. The plans shall be checked for constructability, consistency, clarity and compliance. Also, selectively check dimensions and elevations.

k. Resolve differences.

4. **WSDOT Design Unit Supervisor's Responsibilities**

a. Encourage and facilitate communication.

b. Early involvement to assure that design concepts are appropriate.

c. Empower Design Reviewer or Coordinator.

d. Facilitate resolution of issues beyond authority of WSDOT Reviewer or Coordinator.

e. Facilitate face-to-face meetings.

5. WSDOT S&E Engineer's Responsibilities – See Section 12.4.8.

6. **WSDOT Bridge Design Engineer's Responsibilities**

a. Cursory review of design plans.

b. Signature approval of S&E bridge contract package.

C. **Consultant PS&E** — Projects on County and City Right of Way

Counties and cities frequently hire Consultants to design bridges. WSDOT Highways and Local Programs Office determine which projects are to be reviewed by the Bridge and Structures Office.

WSDOT Highways and Local Programs send the PS&E to the Bridge Projects Engineer for assignment when a review is required. The Bridge and Structures Office's Consultant Liaison Engineer is not involved.

A WSDOT Design Reviewer or Coordinator will be assigned to the project and will review the project as outlined for Consultant PS&E — Projects on WSDOT Right of Way (see Section 1.3.2.B).

Two sets of plans with the reviewers' comments marked in red should be returned to the Bridge Projects Unit. One set of plans will be returned to Highways and Local Programs. The Bridge Scheduling Engineer will file the other set in the Bridge Projects Unit.

The first review should be made of the Preliminary Plan followed later by review of the PS&E and design calculations. Comments are treated as advisory, although major structural issues must be addressed and corrected. An engineer from the county, city, or consultant may contact the reviewer to discuss the comments.

1.3.3 Design/Check Calculation File

A. **File of Calculations –** The Bridge and Structures Office maintains a file of all pertinent design/check calculations for documentation and future reference. (See Section 1.3.8 Archiving Design Calculations, Design Files, and S&E Files).

B. **Procedures –** After an assigned project is completed and the bridge is built, the designer shall turn in a bound file containing the design/check calculations for archiving. The front cover should have a label (See Figure 1.3.8-1).

C. **File Inclusions –** The following items should be included in the file:

1. **Index Sheets –** Number all calculation sheets and prepare an index by subject with the corresponding sheet numbers.

   List the name of the project, SR Number, designer/checker initials, date (month, day, and year), and Unit Supervisor's initials.

2. **Design Calculations –** The design calculations should include design criteria, design assumptions, loadings, structural analysis, one set of moment and shear diagrams and pertinent computer input and output data (reduced to 8½″ by 11″ sheet size).

   The design criteria, design assumptions, and special design features should follow in that order behind the index.

   Computer-generated design calculations may be used instead of longhand calculations. The calculation sheets shall be formatted similar to WSDOT standard calculation sheets (WSDOT Form 232-007) for longhand designs. The header for electronic calculation sheets shall carry WSDOT logo along with project name, S.R. number, designer and checker's name, date, supervising engineer, and sheet numbers.

   All computer-generated or longhand design calculations shall be initialed by the designer and checker. Checker's initial may not be necessary if separate check calculations are provided.

   Output from commercial software shall be integrated into design calculations with a cover sheet that includes the WSDOT logo along with project name, S.R. number, designer and checker's name, date, supervising engineer, and sheet numbers.

   Consultant submitted design calculations shall comply with the above requirements.

   Design calculations prepared by the Bridge Design Office or Consultants need not be sealed and signed. Design calculations are considered part of the process that develops contract plans which are the final documents.

   See Appendix 1.5-A4-1 for examples of Excel template for computer-generated design calculations. Code and other references used in developing calculations shall be specified. In general, when using Excel spreadsheet, enough information and equations shall be provided/shown in the spreadsheet so that an independent checker can follow the calculations.

3. **Special Design Features –** Brief narrative of major design decisions or revisions and the reasons for them.

4. **Construction Problems or Revisions –** Not all construction problems can be anticipated during the design of the structure; therefore, construction problems arise during construction, which will require revisions. Calculations for revisions made during construction should be included in the design/check calculation file when construction is completed.

D. **File Exclusions –** The following items should not be included in the file:

1. Geometric calculations.
2. Irrelevant computer information.
3. Prints of Office Standard Sheets.
4. Irrelevant sketches.
5. Voided sheets.
6. Preliminary design calculations and drawings unless used in the final design.
7. Test hole logs.
8. Quantity calculations.

1.3.4 PS&E Review Period

See Section 12.4.10 for PS&E Review Period and Turn-in for AD Copy activities.

1.3.5 Addenda

Plan or specification revisions during the advertising period require an addendum. The Specifications and Estimate Engineer will evaluate the need for the addendum after consultation with the HQ Construction — Bridge, Region, and the HQ or Region Plans Branch. The Bridge Design Engineer or the Unit Supervisor must initial all addenda.

For addenda to contract plans, obtain the original drawing from the Bridge Projects Unit. Use shading to mark all changes (except deletions) and place a revision note at the bottom of the sheet (Region and HQ Plans Branch jointly determine addendum date) and a description of the change. Return the 11″ by 17″ signed original and copy to the Specifications and Estimate Engineer who will submit the copy to the HQ Plans Branch for processing. See Chapter 12 for additional information.

For changes to specifications, submit a copy of the page with the change to the Specifications and Estimate Engineer for processing.

1.3.6 Shop Plans and Permanent Structure Construction Procedures

This section pertains to fabrication shop plans, weld procedures, electrical and mechanical items, geotechnical procedures, such as: drilled shafts and tieback walls, and other miscellaneous items related to permanent construction.

The following is a guide for checking shop plans and permanent structure construction procedures.

A. **Bridge Shop Plans and Procedures**

1. Mark one copy of each sheet with the following, near the title block, in red pen or with a rubber stamp:

   Office Copy
   Contract (number)
   (Checker's initials) (Date)
   Approval Status (A, AAN, RFC or Structurally Acceptable)

2. On the Bridge Office copy, mark with red pen any errors or corrections. Yellow shall be used for highlighting the checked items. The red pen marks will be copied onto the other copies and returned to the Region Project Engineer. Comments made with red pen, especially for 8½″ by 11″ or 11″ by 17″ size sheets, shall be clear, neat, and conducive to being reproduced by Xerox. These comments should be "bubbled" so they stand out on a black and white Xerox copy. Use of large sheets should be discouraged because these require extra staff assistance and time to make these copies by hand.

3. Items to be checked are typically as follows: Check against Contract Plans and Addenda, Special Provisions, Previously Approved Changes and Standard Specifications.

   a. Material specifications (ASTM specifications, hardness, alloy and temper, etc.).

   b. Size of member and fasteners.

   c. Length dimensions, if shown on the Contract Plans.

   d. Finish (surface finish, galvanizing, anodizing, painting, etc.).

   e. Weld size and type and welding procedure if required.

   f. Strand or rebar placement, jacking procedure, stress calculations, elongations, etc.

   g. Fabrication — reaming, drilling, and assembly procedures.

   h. Adequacy of details.

   i. Erection procedures.

   For prestressed girders and post-tensioning shop plan review see Sections 5.6.3A and 5.8.6C respectively.

4. Items Not Requiring Check

   a. Quantities in bill of materials.

   b. Length dimensions not shown on Contract Plans except for spot checking and is emphasized by stamping the plans: *Geometry Not Reviewed by the Bridge and Structures Office.*

5. Project Engineer's Copy

   Do not use the Project Engineer's copy (comments or corrections are in green) as the office copy. Transfer the Project Engineer's corrections, if pertinent, to the office copy using red pen. The Project Engineer's comments may also be received by e-mail.

6. Marking Copies

   When finished, mark the office copy with one of five categories in red pen, lower right corner.

   a. "A"

      Approved, No Corrections required.

   b. "AAN"

      Approved As Noted — minor corrections only. Do not place written questions on an approved as noted sheet.

   c. "RFC"

      Returned for Correction — major corrections are required which requires a complete resubmittal.

   d. "Structurally Acceptable"

      This is appropriate for items that are not required to be "Approved" per the contract, such as: work platforms, submittals from various local agencies or developers, and other items that are reviewed as a courtesy.

e. "Structurally Acceptable But Does Not Conform to the Contract Requirements"

This is appropriate when a deviation from the contract is found but is determined to be structurally acceptable.

If in doubt between AAN and RFC, check with the Unit Supervisor or Construction Support Engineer. An acceptable detail may be shown in red. Mark the plans *Approved As Noted* provided that the detail is clearly noted *Suggested Correction — Otherwise Revise and Resubmit*.

Do not mark the other copies. The Construction Support Unit will do this.

Notify the Construction Support Engineer if there are any structurally acceptable deviations to the contract plans. The Construction Support Engineer will notify both the Region Project Engineer and HQ Construction-Bridge, who may have to approve a change order and provide justification for the change order.

Notify the Unit Supervisor and the Construction Support Engineer if problems are encountered which may cause a delay in the checking of the shop plans or completion of the contract. Typically, WSDOT administered contracts require reviews to be completed within 30 days. The review time starts when the Project Engineer first receives the submittal from the Contractor and ends when the Contractor has received the submittal back from the Project Engineer. The Bridge Office does not have the entire 30-day review period to complete the review. Therefore, designers should give construction reviews high priority and complete reviews in a timely manner so costly construction delays are avoided. Time is also required for marking, mailing and other processing. It is the goal of the Bridge and Structures Office to return reviewed submittals back to the Project Engineer within 7 to 14 days of their receipt by the Bridge Construction Support Unit.

Return all shop drawings and Contract Plans to the Construction Support Unit when checking is completed. Include a list of any deviations from the Contract Plans that are allowed and a list of any disagreements with the Project Engineer's comments (regardless of how minor they may be).

If deviations from the Contract Plans are to be allowed, a Change Order may be required. Alert the Construction Support Unit so that their transmittal letter may inform the Region and the HQ Construction - Bridge.

Under no circumstances should the reviewer mark on the shop plans that a change order is required or notify the Project Engineer that a change order is required. The authority for determining whether a change order is required rests with HQ Construction - Bridge.

B. **Sign Structure, Signal, and Illumination Shop Plans –** In addition to the instructions described under Section 1.3.6A Bridge Shop Plans and Procedures, the following instructions apply:

1. Review the shop plans to ensure that the pole sizes conform to the Contract Plans. Determine if the fabricator has supplied plans for each pole or type of pole called for in the contract.
2. The Project Engineer's copy may show shaft lengths where not shown on Contract Plans or whether a change from Contract Plans is required. Manufacturer's details may vary slightly from contract plan requirements, but must be structurally adequate to be acceptable.

C. **Geotechnical Submittals –** The Bridge Office and the Geotechnical Services Branch concurrently review these submittals which may include special design proprietary retaining walls, drilled shafts, ground anchors, and soldier piles. HQ Construction Office - Bridge is included for the review of drill shaft installation plans. The Construction Support Unit combines these comments and prepares a unified reply that is returned to the Project Engineer

1.3.7 Contract Plan Changes (Change Orders and As-Builts)

A. **Request for Changes –** The following is intended as a guide for processing changes to the design plans after a project has been awarded.

For projects which have been assigned a Bridge Technical Advisor (BTA), structural design change orders can be approved at the Project Engineer's level provided the instructions outlined in the *Construction Manual* M 41-01 are followed.

For all other projects, all changes are to be forwarded through the Construction Support Unit, which will inform the HQ Construction Engineer - Bridge. Responses to inquiries should be handled as follows:

1. **Request by Contractor or Supplier –** A designer, BTA, or Unit Supervisor contacted directly by a contractor/supplier may discuss a proposed change with the contractor/supplier, but shall clearly tell the contractor/supplier to formally submit the proposed change though the Project Engineer and that the discussion in no way implies approval of the proposed change. Designers are to inform their Unit Supervisor if they are contacted.
2. **Request From the Region Project Engineer –** Requests for changes directly from the Project Engineer to designer or the Unit Supervisor should be discouraged. The Project Engineer should contact HQ Construction - Bridge, who in turn will contact the designer or Unit Supervisor if clarification is needed regarding changes. The Construction Support Unit should be informed of any changes.
3. **Request From the Region Construction Engineer –** Requests from the Region Construction Engineer are to be handled like requests from the Region Project Engineer.
4. **Request From the HQ Construction - Bridge –** Requests for changes from HQ Construction - Bridge are usually made through the Construction Support Unit and not directly to the Design Unit. However, sometimes, it is necessary to work directly with the Design Unit. The Construction Support Unit should be informed of any decisions made involving changes to the Contract Plans.
5. **Request From the Design Unit –** Request for changes from the Design Unit due to plan errors or omissions shall be discussed with the Bridge Design Engineer prior to revising and issuing new plan sheets.

B. **Processing Contract Revisions –** Changes to the Contract Plans or Specifications subsequent to the award of the contract may require a contract plan revision. Revised or additional plan sheets, which clearly identify the change on the plans, may be needed. When a revision or an additional drawing is necessary, request the original plan sheets from the Construction Support Unit's Bridge Plans Engineer and prepare revised or new original plan sheets.

Sign, date, and send the new plan sheets to the Bridge Plans Engineer. Send two paper copies to HQ Construction-Bridge. The Construction Support Unit requires one paper copy. The Design Unit requires one or more paper copies. One paper print, stamped *"As Constructed Plans"*, shall be sent to the Project Engineer, who shall use it to mark construction changes and forward them as *"As-Built Plans"* to the Bridge Plans Engineer upon project completion. The Designer is responsible for making the prints and distributing them.

This process applies to all contracts including HQ Ad and Award, Region Ad and Award, or Local Agency Ad and Award.

Whenever new plan sheets are required as part of a contract revision, the information in the title blocks of these sheets must be identical to the title blocks of the contract they are for (e.g., Job Number, Contract No., Fed. Aid Proj. No., Approved by, and the Project Name). These title blocks shall also be initialed by the Bridge Design Engineer, Unit Supervisor, designer, and reviewer before they are distributed. If the changes are modifications made to an existing sheet, the sheet number will remain the same. A new sheet shall be assigned the same number as the one in the originals that it most closely resembles and shall be given a letter after the number (e.g., if the new sheet applies to the original sheet 25 of 53, then it will have number 25A of 53). The Bridge Plans Engineer in the Construction Support Unit shall store the 11″ by 17″ original revision sheets.

Every revision will be assigned a number, which shall be enclosed inside a triangle. The assigned number shall be located both at the location of the change on the sheet and in the revision block of the plan sheet along with an explanation of the change.

Any revised sheets shall be sent to HQ Construction-Bridge with a written explanation describing the changes to the contract, justification for the changes, and a list of material quantity additions or deletions.

C. **As-Built Plan Process –** For more information on the as-built plan process for bridges, see the *As-Built Plans Manual*, prepared by the Bridge and Structures Office, dated August 2003. Copies are available from the Bridge Plans Engineer.

1.3.8 Archiving Design Calculations, Design Files, and S&E Files

A. **Upon Award –** The Bridge Plans Engineer will collect the Design File (Job File), S&E File and Design Calculations. Files will be placed in a temporary storage space marked as "Design Unit Document Temporary Storage". These cabinets will be locked, and only the Bridge Plans Engineer, the Scheduling Engineer, and the Office Administrator will have keys to them. The Design Files, S&E Files, and Design Calculations are stored under the contract number.

A Bridge and Structures staff member may access the Design Files, S&E Files, or Design Calculations by requesting the files from the Bridge Plans Engineer or the Scheduling Engineer, who will check out the files and note the date and person's name. If a person other than a Bridge and Structures Office staff member requests these documents, the approval of the Bridge Design Engineer or Bridge Projects Engineer will be required for release of the documents.

B. **Upon Contract Completion –** The designer will place a job file cover label on the file folder (see Figure 1-3.8-1) and update the file with any contract plan changes that have occurred during construction.

Two years after physical completion of the contract, the Bridge Plans Engineer will box and send the documents to the Office of Secretary of State for archive storage, except as otherwise approved by the Bridge Design Engineer.

The Bridge Plans Engineer will maintain a record of the documents location and archive status.

SR # _____ County _____ CS # _____

Bridge Name _____

Bridge # _____ Contract # _____

Contents _____

Designed by _____ Checked by _____

Archive Box # _____ Vol. #_____

Cover Label
Figure 1.3.8-1

1.3.9 Public Disclosure Policy Regarding Bridge Plans

The Bridge Management Engineer is the Bridge and Structures Office's official Public Disclosure contact and shall be contacted for clarification and/or direction.

Executive Order, E1023.0 *Public Disclosure*, which replaced Directive D 72-21 *Release of Public Records*, provides a specific procedure to follow when there is a request for public records. (See wwwi.wsdot.wa.gov/Publications/Policies/default.htm.)

The Bridge and Structures Office is the "owner" of only two types of "official" records: (1) Design Calculations (until they are turned over to the State Archives Office) and (2) Bridge Inspection Documents.

No records will be disclosed without a written request. This request is to be specific.

As-built plans available on the Bridge and Structures website are not "official" as-built plans. The Regions are the owners of the "official" as-built plans and the procedure for providing requested copies of these plans is similar to the procedure outlined above with the following modifications:

- If you receive a written or verbal request for a set of plans from a person indirectly working for WSDOT (i.e. contractor, consultant), advise them to contact and request the plans from the WSDOT Project Engineer.
- If the request comes from a person directly working on a Bridge Office project as an on-call consultant, have them contact and request the plans from the Bridge and Structures Office's Consultant Liaison Engineer.
- If the request comes from a person not working for WSDOT, they must submit their written request to the person and address noted below and it will be forwarded to the appropriate Region to provide the requested documents.

  Written requests must be sent to:

  Records and Information Service Office
  Washington State Department of Transportation
  310 Maple Park Avenue
  P. O. Box 47410
  Olympia, WA 98504-7410
  Attn: Ms. Cathy Downs

1.3.10 Use of Computer Software

A. **Protection of Intellectual Property –** Many of the software tools used by the Bridge and Structures Office are licensed from commercial software vendors. WSDOT is committed to using these tools only as allowed by law and as permitted by software license. WSDOT employees shall comply with the terms and conditions of all licensing agreements and provisions of the Copyright Act and other applicable laws.

Before using any software tools WSDOT employees shall read and understand Instructional Letter 4032.00 *Computer Software Piracy Prevention, and the Protection of Intellectual Property*.[1]

B. **Policy on Open Source Software –** It is the policy of the Bridge and Structures Office to license its own engineering software as open source, and to prefer and promote the use of open source software, within the bridge engineering community.

To support this policy on open source bridge engineering software, the Bridge and Structures Office is a founding and participating member of the Alternate Route Project. The purpose of the Alternate Route Project is to serve as a focal point for the collaborative and cooperative development of open source bridge engineering software tools.

C. **Approved Software Tools –** A list of approved software tools available for use by WSDOT bridge design engineers is available at wwwi.wsdot.wa.gov/eesc/bridge/software. Note that this list is only available on the WSDOT intranet. WSDOT does not require consulting engineers to use any specific software tools, so long as the use of the tools are in accordance with sound engineering practice, and does not violate software licensing agreements and Copyright law.

When using personal design tools created by others, such as a spreadsheet or MathCAD document, the designer is responsible for thoroughly checking the tool to ensure the integrity of the structural analysis and design.

1.4 Coordination With Other Divisions and Agencies

During the various phases of design, it is necessary to coordinate the elements of the bridge design function with the requirements of other divisions and agencies. E-mail messages, telephone calls, and other direct communication with other offices are necessary and appropriate. Adequate communications are essential but organizational format and lines of responsibility must be recognized. However, a written request sent through proper channels is required before work can be done or design changes made on projects.

1.4.1 Preliminary Planning Phase

See Chapter 2.1 of this manual for coordination required at the preliminary planning phase.

1.4.2 Final Design Phase

A. **Coordination With Region –** Final coordination of the bridge design with Region requirements must be accomplished during the final design phase. This is normally done with the Region Project Engineer, Region Design Engineer, or Region Plans Engineer. Details such as division of quantity items between the Region PS&E and bridge PS&E are very important to a final contract plan set. The Region PS&E and bridge PS&E are combined by the Region Plans Branch. However, coordination should be accomplished before this time.

   During the design of a project for a Region level contract, the Region shall provide a copy of the proposed structural plans (such as retaining walls, barrier, large culverts, etc.) to the Bridge and Structures Office. The Bridge and Structures Office will review these plans and indicate any required changes and then send them back to the Region.

   The Region shall incorporate the changes prior to contract advertisement.

   After contract advertisement, the Region shall return the original plan sheets to Bridge and Structures Office. These sheets shall be held in temporary storage until the Region completes the "As Constructed Plans" for them.

   The Region shall then transmit the "As Constructed Plans" to Bridge and Structures Office where they will be transferred to the original plans for permanent storage. Upon request, the Region will be provided copies of these plans by the Bridge and Structures Office.

B. **Technical Design Matters –** Technical coordination must be done with the HQ Materials Laboratory Foundation Engineer and with the HQ Hydraulic Engineer for matters pertaining to their responsibilities. A portion of the criteria for a project design may be derived from this coordination; otherwise it shall be developed by the designer and approved by the Bridge Design Engineer.

   The designer should ensure uniformity of structural details, bid items, specifications, and other items when two or more structures are to be advertised under the same contract.

1.5 Bridge Design Scheduling

1.5.1 General

The Bridge Projects Engineer is responsible for workforce projections, scheduling, and monitoring progress of projects. The *Bridge Design Schedule (BDS)* is used to track the progress of a project and is updated monthly by the Bridge Scheduling Engineer. A typical project would involve the following steps:

A. Regions advise Bridge and Structures Office of an upcoming project.

B. The Bridge Projects Unit determines the scope of work, estimates design time and cost to prepare preliminary plans, design, and S&E (see Section 1.5.2). The Unit Supervisor may also do this and notify the Bridge Projects Engineer.

C. The project is entered into the BDS with start and due dates for site data preliminary plan, project design, PS&E, and the Ad Date.

D. Bridge site data received.

E. Preliminary design started.

F. Final Design Started — Designer estimates time required for final plans (see Section 1.5.3).

G. Monthly Schedule Update — Each Unit Supervisor is responsible for maintaining a workforce projection, monitoring monthly progress for assigned projects, and reporting progress or any changes to the scope of work or schedule to the Bridge Projects Engineer.

H. Project turned in to S&E unit.

1.5.2 Preliminary Design Schedule

The preliminary design estimate done by the Bridge Projects Unit is based on historical records from past projects taking into consideration the unique features of each project, the efficiencies of designing similar and multiple bridges on the same project, designer's experience, and other appropriate factors.

1.5.3 Final Design Schedule

A. **Breakdown of Project Man-Hours Required –** Using a spreadsheet, list each item of work required to complete the project and the man-hours required to accomplish them. Certain items of work may have been partially completed during the preliminary design, and this partial completion should be reflected in the columns "% Completed" and "Date Completed." See Appendix 1.5-A1 and 1.5-A2.

   The designer or design team leader should research several sources when making the final design time estimate. The following are possible sources that may be used:

   The "Bridge Design Summary" contains records of design time and costs for past projects. This summary is kept in the Bridge Projects Unit. The times given include preliminary plan, design, check, drafting, and supervision.

   The Bridge Projects Unit has "Bridge Construction Cost Summary" books. These are grouped according to bridge types and have records of design time, number of drawings, and bridge cost.

B. **Estimate Design Time Required –** The designer or design team leader shall determine an estimate of design time required to complete the project. The use of a spreadsheet, or other means is encouraged to ensure timely completion and adherence to the schedule. Use 150 hours for one man month.

The following percentages should be used for the following activities:

Activity No.	Percentage
1	40
2	20
3	20
4	5
5	5
6	5
7	5
Total	100%

The individual activities include the specific items as follows under each major activity.

Activity No. 1 Design — See Section 1.3.2.A.2 — Includes:

1. Project coordination and maintaining the Design File.
2. Geometric computations.
3. Design calculations.
4. Complete check of all plan sheets by the designer.
5. Compute quantities and prepare barlist.
6. Preparing special provisions checklist.
7. Assemble backup data covering any unusual feature in the Design File.

Activity No. 2 Design Check — See Section 1.3.2.A.3 — Includes:

1. Checking design at maximum stress locations.
2. Checking major items on the drawings, including geometrics.
3. Additional checking required.

Activity No. 3 Drawings — See Section 1.3.2.A.4 — Includes:

1. Preparation of all drawings.

Activity No. 4 Revisions — Includes:

1. Revisions resulting from the checker's check.
2. Revisions resulting from the Unit Supervisor's review.
3. Revisions from S&E Engineer's review.
4. Revisions from Region's review.

Activity No. 5 Quantities — Includes:

1. Compute quantities including barlist.
2. Check quantities and barlist.

Activity No. 6 S&E — See Section 12.4 — Includes:

1. Prepare S&E.
2. Prepare working day schedule.

Activity No. 7 Project Review — Includes:

1. Unit Supervisor and Specialist's review.

C. **Monthly Project Progress Report –** The designer or design team leader is responsible for determining monthly project progress and reporting the results to the Unit Supervisor. The Unit Supervisor is responsible for monthly progress reports using information from the designer or design team leader. Any discrepancies between actual progress and the project schedule must be addressed. Report any revisions to the workforce assigned to the project, hours assigned to activities, or project schedule revisions to the Bridge Projects Engineer and Region.

The designer may use a computer spreadsheet, to track the progress of the project and as an aid in evaluating the percent complete. Other tools include using an Excel spreadsheet listing bridge sheet plans by title, bridge sheet number, percent design complete, percent design check, percent plan details completed, and percent plan details checked. This data allows the designer or design team leader to rapidly determine percent of project completion and where resources need to be allocated to complete the project on schedule.

1.6 Guidelines for Bridge Site Visits

The following guidelines are established to help all staff in determining the need for visiting bridge sites prior to final design. These guidelines should apply to consultants as well as to our own staff. In all cases, the Region project engineer should be made aware of the site visit so they may have the opportunity to participate. Region participation is very useful prior to preparing the preliminary bridge plans.

1.6.1 Bridge Rehabilitation Projects

This section pertains to major bridge rehabilitation projects and excludes rail and minor expansion joint rehabilitation projects. It is critical that the design team know as much as possible about the bridge which is to be rehabilitated. Recent bridge inspection reports, prepared by inspectors from the Bridge Preservation Office (BPO), contain useful information on the condition of existing bridges. The bridge inspection reports, as well as as-built plans, are available on the Intranet through *Bridge Engineering Information System (BEIST)*. BPO maintains *BEIST*.

As-built drawings and contract documents are also helpful, but may not necessarily be accurate. At least one bridge site visit is necessary for this type of project. In some cases, an in-depth inspection with experienced BPO inspectors is appropriate. The decision to perform an in-depth inspection should include the Unit Supervisor, Region, the Bridge Design Engineer, and the Bridge Preservation Engineer.

It may be necessary to use BPO's Under Bridge Inspection Truck (UBIT) if there is a need to access details and obtain measurements during the field visit. Advance planning and coordination with BPO will be necessary if UBIT equipment is required because of BPO's heavy workload and the need to provide traffic control well in advance of the site visit.

1.6.2 Bridge Widening and Seismic Retrofits

For this type of bridge project, it is important that the design team is familiar with the features and condition of the existing bridge. There is good information regarding the condition of existing bridges on *BEIST* and at the Bridge Preservation Office. As-built drawings and contract documents are also helpful, but may not necessarily be accurate. A site visit is recommended for this type of project if the bridge to be widened has unique features or is other than a standard prestressed girder bridge with elastomeric bearings.

1.6.3 Rail and Minor Expansion Joint Retrofits

Generally, photographs and site information from the Region along with as-built plans and condition survey information are adequate for most of these types of projects. However, if there is any doubt about the adequacy of the available information or concern about accelerated deterioration of the structural elements to be retrofitted, a site visit is recommended.

1.6.4 New Bridges

Generally, photographs and site data from the Region are adequate for most new bridge designs. However, if the new bridge is a replacement for an existing bridge, a site visit is recommended, particularly if the project requires staged removal of the existing bridge and/or staged construction of the new bridge.

1.6.5 Bridge Demolition

If bridge demolition is required as part of a project, a site visit would help the design team determine if there are unique site restrictions that could affect the demolition. If unique site restrictions are observed, they should be documented, included in the job file, and noted on the special provisions checklist.

Before making a site visit, the Bridge Preservation Office and the Region should be contacted to determine if there are any unique site conditions or safety hazards. Proper safety equipment and procedures should always be followed during any site visit.

When making a site visit, it is important to obtain as much information as possible. Digital photographs, video records with spoken commentary, field measurements, and field notes are appropriate forms of field information. A written or pictorial record should be made of any observed problems with an existing bridge or obvious site problems. The site visit data would then be incorporated into the job file. This information will be a valuable asset in preparing constructible and cost-effective structural designs.

It is important to include site visits as part of the consultant's scope of work when negotiating for structural design work.

1.6.6 Proximity of Railroads Adjacent to the Bridge Site

During the site visit, it should be noted if there are railroad tracks or railroad structures adjacent to the proposed bridge site. If there are, this will require that a *Railroad Shoring Plan* be included in the bridge plans for any foundation excavation adjacent to the railroad. The reason for including the *Railroad Shoring Plan* is to obtain advance approval of the shoring plan from the railroad so that waiting for the railroad's approval will not cause a delay during construction. The contractor will have to resubmit a revised *Railroad Shoring Plan* to the railroad for approval if the contractor wishes to change any details of the approved *Railroad Shoring Plan* during construction.

At the PS&E submittal phase, the Specifications and Estimates Engineer will send copies of the *Railroad Shoring Plan* to the WSDOT Railroad Liaison Engineer so it can be sent to the railroad for approval.

1.99 References

1. *LRFD Bridge Design Specifications*, Latest Edition and Interims. American Association of State Highway and Transportation Officials (AASHTO), Washington, D.C.
2. *Design Manual*, WSDOT M 22-01.
3. *Construction Manual*, WSDOT M 41-01.
4. *As-Built Plans Manual*, WSDOT Bridge and Structures Office, August 2003.
5. *AASHTO Guide Specifications for LRFD Seismic Bridge Design*, Latest Edition and Interims. American Association of State Highway and Transportation Officials (AASHTO), Washington, D.C.

	Name	Approval Signature	Date
Revision Author			
Revision Checker			
Chapter Author			
Bridge Design Engineer			
BDM Coordinator			
Check of Revised Sheets			
Revision Description:			

Washington State Department of Transportation

Breakdown of Project Manhours Required

Job No. ____ SR ____ Project ____ Made By ____ Date ____

No.	Drawing or Item	Design				Check				Draw				Check Drawing				Comments
		By	% Completed	Hours Required	Date Completed	By	% Completed	Hours Required	Date Completed	By	% Completed	Hours Required	Date Completed	By	% Completed	Hours Required	Date Completed	
1																		
2																		
3																		
4																		
5																		
6																		
7																		
8																		
9																		
10																		
11																		
12																		
13																		
14																		
15																		
16																		
17																		
18																		
19																		
20																		
21																		
22																		

DOT 232-002 (formerly C1M5)
Rev 3/91

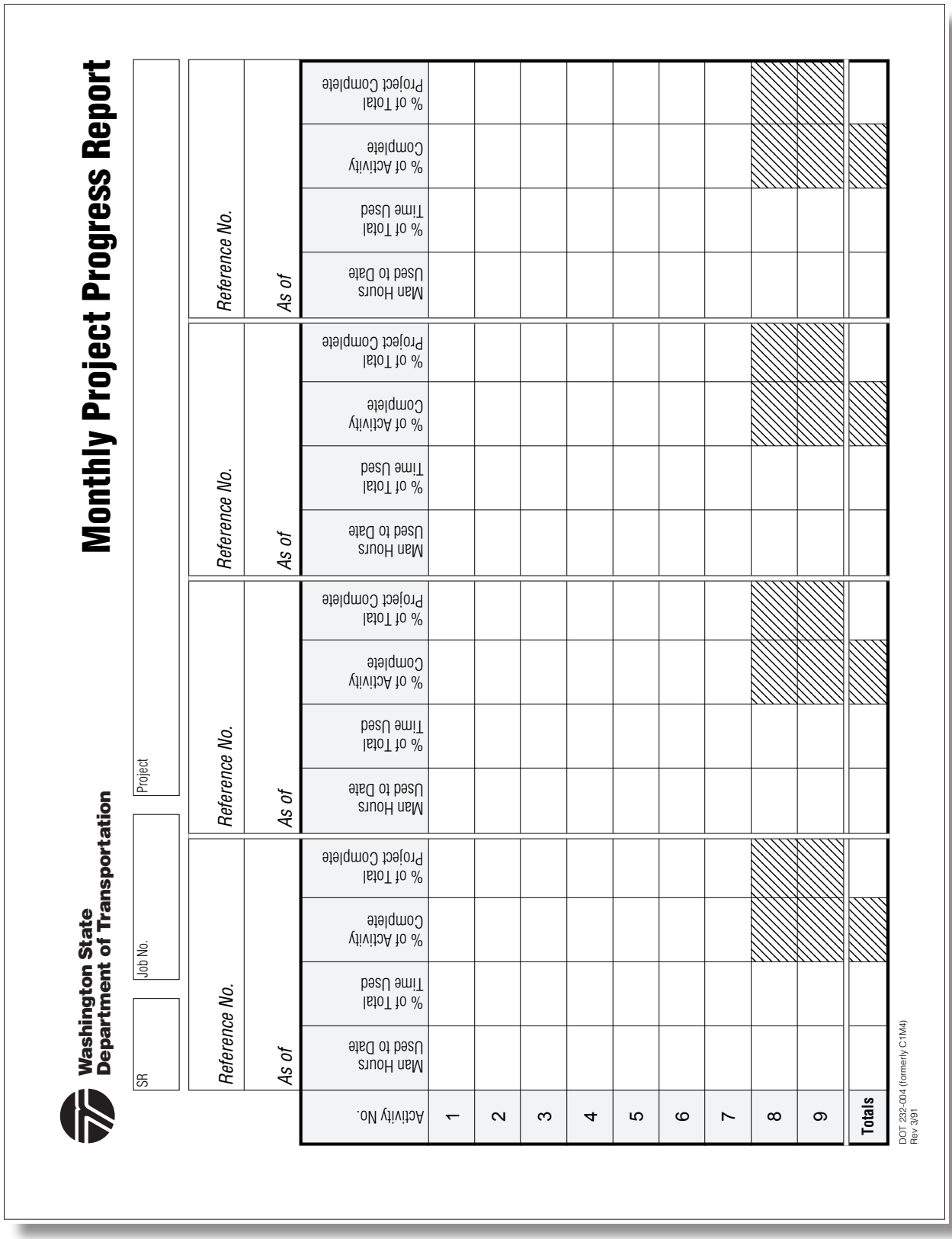

Washington State Department of Transportation

Monthly Project Progress Report

SR | Job No. | Project

Activity No.	Reference No. / As of: Man Hours Used to Date	% of Total Time Used	% of Activity Complete	% of Total Project Complete	Reference No. / As of: Man Hours Used to Date	% of Total Time Used	% of Activity Complete	% of Total Project Complete	Reference No. / As of: Man Hours Used to Date	% of Total Time Used	% of Activity Complete	% of Total Project Complete	Reference No. / As of: Man Hours Used to Date	% of Total Time Used	% of Activity Complete	% of Total Project Complete
1																
2																
3																
4																
5																
6																
7																
8																
9																
Totals																

DOT 232-004 (formerly C1M4)
Rev 3/91

PROJECT TURN-IN QA/QC WORKSHEET (per BDM Chapter 1.3)

Project Name: ***Charge Number:*** ***Design Lead:*** ***Date:***		CHECKLIST (Initials required under respective title)												
		Names Listed				SPECIALIST APPROVAL								
Design Item	**Name**	DESIGNER	CHECKER	DETAILER	SPECIFICATION WRITER	ARCHITECT	RAIL	BEARING	EXPANSION JOINT	CONCRETE	STEEL	SIGN STRUCTURE	JOB FILE COMPLETE	CALCULATIONS BOUND*

Bridge Design Engineer Check at 90%: _____ ☐ Supervisor Plan Review: _____ ☐

NOTES:

* Only Bridges are archived. Sign Structures and Walls are kept on file in the office by designer of record.

Required Actions for each Design Item:

1) Elevations and Dimensions
2) Quantities and Barlist
3) Detailing Sheet Consistency
4) Detailing Plan Consistency
5) Detailing Office Practices
6) Specification Review
7) 100% region Comments Incorporated

Washington State
Department of Transportation

Bridge & Structures
Design Calculations

Project			Sheet No. 1 of 1 Sheets		Code Reference
S.R.	Made By	Check By	Date 7/7/10	Supv	

C:\AAWork\Bridge Template.xlsx Sheet1

Chapter 2 Preliminary Design Contents

2.1 Preliminary Studies . . . 2.1-1
- 2.1.1 Interdisciplinary Design Studies . . . 2.1-1
- 2.1.2 Value Engineering Studies . . . 2.1-1
- 2.1.3 Preliminary Recommendations for Bridge Rehabilitation Projects . . . 2.1-1
- 2.1.4 Preliminary Recommendations for New Bridge Projects . . . 2.1-2
- 2.1.5 Type, Size, and Location (TS&L) Reports . . . 2.1-2
- 2.1.6 Alternate Bridge Designs . . . 2.1-5

2.2 Preliminary Plan . . . 2.2-1
- 2.2.1 Development of the Preliminary Plan . . . 2.2-1
- 2.2.2 Documentation . . . 2.2-2
- 2.2.3 General Factors for Consideration . . . 2.2-3
- 2.2.4 Permits . . . 2.2-4
- 2.2.5 Preliminary Cost Estimate . . . 2.2-5
- 2.2.6 Approvals . . . 2.2-5

2.3 Preliminary Plan Criteria . . . 2.3-1
- 2.3.1 Highway Crossings . . . 2.3-1
- 2.3.2 Railroad Crossings . . . 2.3-4
- 2.3.3 Water Crossings . . . 2.3-5
- 2.3.4 Bridge Widenings . . . 2.3-7
- 2.3.5 Detour Structures . . . 2.3-7
- 2.3.6 Retaining Walls and Noise Walls . . . 2.3-7
- 2.3.7 Bridge Deck Drainage . . . 2.3-8
- 2.3.8 Bridge Deck Protection Systems . . . 2.3-8
- 2.3.9 Construction Clearances . . . 2.3-8
- 2.3.10 Design Guides for Falsework Depth Requirements . . . 2.3-9
- 2.3.11 Inspection and Maintenance Access . . . 2.3-10

2.4 Selection of Structure Type . . . 2.4-1
- 2.4.1 Bridge Types . . . 2.4-1
- 2.4.2 Wall Types . . . 2.4-6

2.5 Aesthetic Considerations . . . 2.5-1
- 2.5.1 General Visual Impact . . . 2.5-1
- 2.5.2 End Piers . . . 2.5-1
- 2.5.3 Intermediate Piers . . . 2.5-2
- 2.5.4 Barrier and Wall Surface Treatments . . . 2.5-2
- 2.5.5 Superstructure . . . 2.5-3

2.6 Miscellaneous . . . 2.6-1
- 2.6.1 Structure Costs . . . 2.6-1
- 2.6.2 Handling and Shipping Precast Members and Steel Beams . . . 2.6-1
- 2.6.3 Salvage of Materials . . . 2.6-1

2.7 WSDOT Standard Highway Bridge . . . 2.7-1
- 2.7.1 Design Elements . . . 2.7-1
- 2.7.2 Detailing the Preliminary Plan . . . 2.7-2

2.99 References . . . 2.99-1

Appendix 2.2-A1	Bridge Site Data General	2.2-A1-1
Appendix 2.2-A2	Bridge Site Data Rehabilitation	2.2-A2-1
Appendix 2.2-A3	Bridge Site Data Stream Crossing	2.2-A3-1
Appendix 2.2-A4	Preliminary Plan Checklist	2.2-A4-1
Appendix 2.2-A5	Request For Preliminary Geotechnical Information	2.2-A5-1
Appendix 2.3-A1	Bridge Stage Construction Comparison	2.3-A1-1
Appendix 2.3-A2	Bridge Redundancy Criteria	2.3-A2-1
Appendix 2.4-A1	Bridge Selection Guide	2.4-A1-1
Appendix 2.7-A1	Standard Superstructure Elements	2.7-A1-1
Appendix 2-B-1		2-B-1
Appendix 2-B-2		2-B-2
Appendix 2-B-3		2-B-3
Appendix 2-B-4		2-B-4
Appendix 2-B-5		2-B-5
Appendix 2-B-6		2-B-6
Appendix 2-B-7		2-B-7
Appendix 2-B-8		2-B-8
Appendix 2-B-9		2-B-9

2.1 Preliminary Studies

2.1.1 Interdisciplinary Design Studies

Region may set up an Interdisciplinary Design Team (IDT) to review the various design alternatives for major projects. The IDT is composed of members from Regions, HQ, outside agencies, and consulting firms. The members have different areas of expertise, contribute ideas, and participate in the selection of design alternatives. This work will often culminate in the publication of an Environmental Impact Statement (EIS).

Bridge designers may be asked to participate either as a support resource or as a member of the IDT.

2.1.2 Value Engineering Studies

Value Engineering (VE) is a review process and analysis of a design project. The VE team seeks to define the most cost-effective means of satisfying the basic function(s) of the project. Usually a VE study takes place before or during the time that the region is working on the design. Occasionally, a VE study examines a project with a completed PS&E. VE studies are normally required for projects with cost overruns.

The VE team is headed by a facilitator and is composed of members with different areas of expertise from Regions, HQ, outside agencies, and consulting firms. The Team Facilitator will lead the team through the VE process. The team will review Region's project as defined by the project's design personnel. The VE team will determine the basic function(s) that are served by the project, brainstorm all possible alternatives to serve the same function(s), evaluate the alternatives for their effectiveness to meet the project's basic functions, determine costs, and prioritize and recommend alternatives. The VE team will prepare a report and present their findings to the region. The Region is then required to investigate and address the VE team's findings in the final design.

Bridge designers may be asked to participate either as a support resource or as a member of the VE team. VE studies usually take place over a three to five day period.

Engineers participating in VE studies and Cost-Risk Assessment meetings shall call the S&E Engineers and double check all costs when providing cost estimates at VE studies and CRA meetings.

2.1.3 Preliminary Recommendations for Bridge Rehabilitation Projects

When the Region starts a bridge rehabilitation project, they will submit a written memo requesting that the Bridge and Structures Office make preliminary project recommendations.

The Bridge and Structures Office will review the as-built plans, load ratings, existing inspection and condition reports prepared by the Bridge Preservation Office (BPO), and schedule a site visit with Region and other stakeholders. Special inspection of certain portions of the structure may be included in the site visit or scheduled later with Region and BPO. The purpose of the inspections is to obtain more detailed information as to the bridge's condition, to obtain dimensions and take photographs of details needed for the project recommendations.

Following the site visit, the next steps are:

- Determine the load capacity of the existing bridge.
- Determine what type of rehabilitation work is needed and time frame required to accomplish the work.

- Determine any special construction staging requirements. Can the bridge be totally shut down for the rehabilitation period? How many lanes will need to be open? Can the work be accomplished during night closures or weekend closures?
- Develop various alternatives and cost estimates for comparison, ranging from “do nothing” to “new replacement”.
- Determine what the remaining life expectancies are for the various rehabilitation alternatives.
- Determine the cost of a new replacement bridge.

Note: The FHWA will not participate in funding the bridge rehabilitation project if the rehabilitation costs exceed 50% of the cost for a new bridge replacement.

The Bridge and Structures Office will provide Region with a written report with background information. The Region will be given an opportunity to review the draft report and to provide input prior to finalization.

The Bridge Projects Engineer and Specifications & Estimates Engineers provide bridge scoping cost estimates to Regions for their use in determining budgets during Region's project definition phase. The S&E Engineers will check the Bridge Project Engineer's estimate as well as check each other.

2.1.4 Preliminary Recommendations for New Bridge Projects

The Region will seek assistance from the Bridge and Structures Office when they are preparing a design project requiring new bridges. Similar to the procedures outlined above for rehabilitation projects. The Region will submit a written memo requesting that the bridge office make preliminary project recommendations. The Bridge and Structures Office will provide scope of work, cost estimate(s), and a summary of the preferred alternatives with recommendations. Face to face meetings with the Region project staff are recommended prior to sending a written memo.

The Bridge Projects Engineer and Specifications & Estimates Engineers provide bridge scoping cost estimates to Regions for their use in determining budgets during Region's project definition phase. The S&E Engineers will check the Bridge Project Engineer's estimate as well as check each other.

2.1.5 Type, Size, and Location (TS&L) Reports

The Federal Highway Administration (FHWA) requires that major or unusual bridges must have a Type, Size, and Location (TS&L) report prepared. The report will describe the project, proposed structure(s), cost estimates, other design alternatives considered, and recommendations. The report provides justification for the selection of the preferred alternative. Approval by FHWA of the TS&L study is the basis for advancing the project to the design stage.

The FHWA should be contacted as early as possible in the Project Development stage because the FHWA requires a TS&L study for tunnels, movable bridges, unusual structures, and major structures. Smaller bridges that are unusual or bridge projects for Local Agencies may also require a TS&L study. Other projects, such as long viaducts, may not. Check with the Bridge Projects Engineer to see if a TS&L report is necessary.

The preparation of the TS&L report is the responsibility of the Bridge and Structures Office. The TS&L cannot be submitted to FHWA until after the environmental documents have been submitted. However, TS&L preparation need not wait for environmental document approval, but may begin as soon as the bridge site data is available. See the WSDOT *Design Manual* M 22-01 for the type of information required for a bridge site data submittal.

A. **TS&L General –** The designer should first review the project history in order to become familiar with the project. The environmental and design reports should be reviewed. The bridge site data should be checked so that additional data, maps, or drawings can be requested. A meeting with Region and a site visit should be arranged after reviewing the history of the project.

The Materials Laboratory Geotechnical Services Branch must be contacted early in the TS&L process in order to have foundation information. Specific recommendations on the foundation type must be included in the TS&L report. The Materials Laboratory Geotechnical Services Branch will submit a detailed foundation report for inclusion as an appendix to the TS&L report.

To determine the preferred structural alternative, the designer should:

l. Develop a list of all feasible alternatives. At this stage, the range of alternatives should be kept wide open. Brainstorming with supervisors and other engineers can provide new and innovative solutions.

2. Eliminate the least desirable alternatives by applying the constraints of the project. Question and document the assumptions of any restrictions and constraints. There should be no more than four alternatives at the end of this step.

3. Perform preliminary design calculations for unusual or unique structural problems to verify that the remaining alternatives are feasible.

4. Compare the advantages, disadvantages, and costs of the remaining alternatives to determine the preferred alternative(s).

5. Visit the project site with the Region, Materials Laboratory Geotechnical Services Branch, and HQ Hydraulics staff.

FHWA expects specific information on scour and backwater elevations for the permanent bridge piers, as well as, for any temporary falsework bents placed in the waterway opening.

After the piers have been located, a memo requesting a Hydraulics Report should be sent to the HQ Hydraulics Unit. The HQ Hydraulics Unit will submit a report for inclusion as an appendix to the TS&L report.

The State Bridge and Structures Architect should be consulted early in the TS&L study period. “Notes to the File” should be made documenting the aesthetic requirements and recommendations of the State Bridge and Structures Architect.

Cost backup data is needed for any costs used in the TS&L study. FHWA expects TS&L costs to be based on estimated quantities. This cost data is to be included in an appendix to the TS&L report. The quantities should be compatible with the S&E Engineer’s cost breakdown method. The Specifications & Estimates Engineers will check the designer's estimated costs included in TS&L reports. In the case of consultant prepared TS&L reports, the designer shall have the S&E Engineers check the construction costs.

B. **TS&L Outline –** The TS&L report should describe the project, the proposed structure, and give reasons why the bridge type, size, and location were selected.

1. **Cover, Title Sheet, and Index –** These should identify the project, owner, location and the contents of the TS&L.

2. **Photographs –** There should be enough color photographs to provide the look and feel of the bridge site. The prints should be numbered and labeled and the location indicated on a diagram.

3. **Introduction –** The introduction describes the report, references, and other reports used to prepare the TS&L study. The following reports should be listed, if used.
   - Design Reports and Supplements
   - Environmental Reports

- Architectural Visual Assessment or Corridor Theme Reports
- Hydraulic Report
- Geotechnical Reports

4. **Project Description –** The TS&L report clearly defines the project. A vicinity map should be shown. Care should be taken to describe the project adequately but briefly. The project description summarizes the preferred alternative for the project design.
5. **Design Criteria –** The design criteria identify the AASHTO LRFD Bridge Design Specifications and AASHTO guide specifications that will be used in the bridge design. Sometimes other design criteria or special loadings are used. These criteria should be listed in the TS&L. Some examples in this category might be the temperature loading used for segmental bridges or areas defined as wetlands.
6. **Structural Studies –** The structural studies section documents how the proposed structure Type, Size, and Location were determined. The following considerations should be addressed.
   - Aesthetics
   - Cost estimates
   - Geometric constraints
   - Project staging and stage construction requirements
   - Foundations
   - Hydraulics
   - Feasibility of construction
   - Structural constraints
   - Maintenance

   This section should describe how each of these factors leads to the preferred alternative. Show how each constraint eliminated or supported the preferred alternatives. Here are some examples. "Prestressed concrete girders could not be used because environmental restrictions required that no permanent piers could be placed in the river. This requires a 230-foot clear span." "Restrictions on falsework placement forced the use of self supporting precast concrete or steel girders."
7. **Executive Summary –** The executive summary should be able to "stand alone" as a separate document. The project and structure descriptions should be given. Show the recommended alternative(s) with costs and include a summary of considerations used to select preferred alternatives or to eliminate other alternatives.
8. **Drawings –** Preliminary plan drawings of the recommended alternative are included in an appendix. The drawings show the plan, elevation, and typical section. For projects where alternative designs are specified as recommended alternatives, preliminary plan drawings for each of the different structure types shall be included. Supplemental drawings showing special features, such as complex piers, are often included to clearly define the project.

C. **Reviews and Submittals –** While writing the TS&L report, all major decisions should be discussed with the unit supervisor, who can decide if the Bridge Design Engineer needs to be consulted. A peer review meeting with the Bridge Design Engineer should be scheduled at the 50% completion stage. If applicable, the FHWA Bridge Engineer should be invited to provide input.

The final report must be reviewed, approved, and the Preliminary Plan drawings signed by the State Bridge and Structures Architect, the Bridge Projects Engineer, the Bridge Design Engineer, and the Bridge and Structures Engineer. The TS&L study is submitted with a cover letter to FHWA signed by the Bridge and Structures Engineer.

2.1.6 Alternate Bridge Designs

Bridge site conditions or current market conditions may justify the creation of alternate bridge designs. WSDOT has successfully used alternate bridge designs in the past to obtain best-value bridge design and construction solutions for specific locations. Alternate bridge designs may be considered when the following conditions can be satisfied:

- Construction cost estimates for the alternate designs should be comparable (within 10%). Cost estimates should include anticipated life-cycle costs (painting, maintenance, inspection). Periods of market uncertainty, with associated structure cost fluctuations, can provide further justification for alternate bridge designs.
- Region staff must approve the design expenditures for the preparation of alternate bridge designs, including preliminary plans, final bridge plans, specifications and construction cost estimates.
- WSDOT Bridge Office staffing levels and design schedules have to allow for the preparation of alternate bridge designs.
- Variations in pier location may be required in order to optimize superstructure design for different alternates. Environmental constraints, geotechnical, hydraulic and scour conditions all need to allow for variations in pier location.
- Construction staging and traffic control must be determined for the alternates.
- Alternate bridge design concepts must be reviewed and approved by the Bridge and Structures Architect.

2.2 Preliminary Plan

The Preliminary Plan preparation stage is the most important phase of bridge design because it is the basis for the final design. The Preliminary Plan should completely define the bridge geometry so the final roadway design by the regions and the structural design by the bridge office can take place with minimal revisions.

During the Region's preparation of the highway design, they also begin work on the bridge site data. Region submits the bridge site data to the Bridge and Structures Office, which initiates the start of the Preliminary Plan stage. Information that must be included as part of the bridge site data submittal is described in WSDOT *Design Manual* M 22-01 and Appendices 2.2-A1, 2.2-A2, and 2.2-A3.

2.2.1 Development of the Preliminary Plan

A. **Responsibilities –** In general, the responsibilities of the designer, checker, detailer, and unit supervisor are described in Section 1.2.2. The Preliminary Plan Design Engineer or the assigned designer is responsible for developing a preliminary plan for the bridge. The preliminary plan must be compatible with the geometric, aesthetic, staging, geotechnical, hydraulic, financial, structural requirements and conditions at the bridge site.

Upon receipt of the bridge site data from the Region, the designer shall review it for completeness and verify that what the project calls for is realistic and structurally feasible. Any omissions or corrections are to be immediately brought to the Region's attention so that revised site date, if required, can be resubmitted to avoid jeopardizing the bridge design schedule.

The Unit Supervisor shall be kept informed of progress on the preliminary plan so that the schedule can be monitored. If problems develop, the Unit Supervisor can request adjustments to the schedule or allocate additional manpower to meet the schedule. The designer must keep the job file up-to-date by documenting all conversations, meetings, requests, questions, and approvals concerning the project. Notes-to-the-designer, and details not shown in the preliminary plan shall be documented in the job file.

The checker shall provide an independent review of the plan, verifying that it is in compliance with the site data as provided by the region and as corrected in the job file. The plan shall be compared against the Preliminary Plan checklist (see Appendix 2.2-A4) to ensure that all necessary information is shown. The checker is to review the plan for consistency with office design practice, detailing practice, and for constructibility.

The preliminary plan shall be drawn using current office CAD equipment and software by the designer or detailer.

B. **Site Reconnaissance –** The site data submitted by the Region will include photographs and a video of the site. Even for minor projects, this may not be enough information for the designer to work from to develop a preliminary plan. For most bridge projects, site visits are necessary.

Site visits with Region project staff and other project stakeholders, such as, Materials Laboratory Geotechnical Services Branch, HQ Hydraulics, and Region Design should be arranged with the knowledge and approval of the Bridge Projects Engineer.

C. **Coordination –** The designer is responsible for coordinating the design and review process throughout the project. This includes seeking input from various WSDOT units and outside agencies. The designer should consult with Materials Laboratory Geotechnical Services Branch, HQ Hydraulics, Bridge Preservation Office, and Region design and maintenance, and other resources for their input.

D. **Consideration of Alternatives –** In the process of developing the Preliminary Plan, the designer should brainstorm, develop, and evaluate various design alternatives. See Section 2.2.3 General Factors for Consideration and how they apply to a particular site. See also Section 2.1.5A. Preliminary design calculations shall be done to verify feasibility of girder span and spacing, falsework span capacity, geometry issues, and construction clearances. Generally, the number of alternatives will usually be limited to only a few for most projects. For some smaller projects and most major projects, design alternatives merit development and close evaluation. The job file should contain reasons for considering and rejecting design alternatives. This provides documentation for the preferred alternative.

E. **Designer Recommendation –** The designer should be able to make a recommendation for the preferred alternative after a thorough analysis of the needs and limitations of the site, studying all information, and developing and evaluating the design alternatives for the project. At this stage, the designer should discuss the recommendation with the Bridge Projects Engineer.

F. **Concept Approval –** For some projects, the presentation, in "E" above, to the Bridge Projects Engineer will satisfy the need for concept approval. Large complex projects, projects of unique design, or projects where two or more alternatives appear viable, should be presented to the Bridge Design Engineer for his/her concurrence before plan development is completed. For unique or complex projects a presentation to the Region Project Engineer, and Bridge and Structures Office Peer Review Committee may be appropriate.

2.2.2 Documentation

A. **Job File –** An official job file is created by the Bridge Scheduling Engineer when a memo transmitting site data from the region is received by the Bridge and Structures Office. This job file serves as a depository for all communications and resource information for the job. Scheduling and time estimates are kept in this file, as well as cost estimates, preliminary quantities, and documentation of all approvals. Records of important telephone conversations and copies of e-mails approving decisions are also kept in the job file.

After completing the Preliminary Plan, the job file continues to serve as a depository for useful communications and documentation for all pertinent project related information and decisions during the design process through and including preparation of the Final Bridge PS&E.

B. **Bridge Site Data –** All Preliminary Plans are developed from site data submitted by the Region. This submittal will consist of a memorandum intra-departmental communication, and appropriate attachments as specified by the WSDOT *Design Manual* M 22-01. When this information is received, it should be reviewed for completeness so that missing or incomplete information can be noted and requested.

C. **Request for Preliminary Foundation Data –** A request for preliminary foundation data is sent to the Geotechnical Services Branch to solicit any foundation data that is available at the preliminary bridge design stage. See Appendix 2.2-A5. The Materials Laboratory Geotechnical Services Branch is provided with approximate dimensions for the overall structure length and width, approximate number of intermediate piers (if applicable), and approximate stations for beginning and end of structure on the alignment.

Based on test holes from previous construction in the area, geological maps, and soil surveys. The Materials Laboratory Geotechnical Services Branch responds by memo and a report with an analysis of what foundation conditions are likely to be encountered and what foundation types are best suited for the bridge site.

D. **Request for Preliminary Hydraulics Data –** A Request for preliminary hydraulics data is sent to the Hydraulics Branch to document hydraulic requirements that must be considered in the structure design. The Hydraulics Branch is provided a contour plan and other bridge site data.

   The Hydraulics Branch will send a memo providing the following data: seal vent elevations, normal water, 100-year and 500-year flood elevations and flows (Q), pier configuration, scour depth and minimum footing cover required, ice pressure, minimum waterway channel width, riprap requirements, and minimum clearance required to the 100-year flood elevation.

E. **Design Report or Design Summary and Value Engineering Studies –** Some bridge construction projects have a Design File Report or Design Summary prepared by the region. This is a document, which includes design considerations and conclusions reached in the development of the project. It defines the scope of work for the project. It serves to document the design standards and applicable deviations for the roadway alignment and geometry. It is also an excellent reference for project history, safety and traffic data, environmental concerns, and other information. If a VE study was done on the bridge, the report will identify alternatives that have been studied and why the recommended alternative was chosen.

F. **Other Resources –** For some projects, preliminary studies or reports will have been prepared. These resources can provide additional background for the development of the Preliminary Plan.

G. **Notes –** Notes of meetings with Regions and other project stakeholders shall be included in the job file.

2.2.3 General Factors for Consideration

Many factors must be considered in preliminary bridge design. Some of the more common of these are listed in general categories below. These factors will be discussed in appropriate detail in subsequent portions of this manual.

A. **Site Requirements**

   Topography
   Alignment (tangent, curved, skewed)
   Vertical profile and superelevation
   Highway Class and design speed
   Proposed or existing utilities

B. **Safety –** Feasibility of falsework (impaired clearance and sight distance, depth requirements, see Section 2.3.10)
   Density and speed of traffic
   Detours or possible elimination of detours by construction staging
   Sight distance
   Horizontal clearance to piers
   Hazards to pedestrians, bicyclists

C. **Economic**

   Funding classification (federal and state funds, state funds only, local developer funds)
   Funding level
   Bridge preliminary cost estimate

D. **Structural**

   Limitation on structure depth
   Requirements for future widening
   Foundation and groundwater conditions
   Anticipated settlement
   Stage construction
   Falsework limitations

E. **Environmental**

Site conditions (wetlands, environmentally sensitive areas)
EIS requirements
Mitigating measures
Construction access

F. **Aesthetic**

General appearance
Compatibility with surroundings and adjacent structures
Visual exposure and experience for public

G. **Construction**

Ease of construction
Falsework clearances and requirements
Erection problems
Hauling difficulties and access to site
Construction season
Time limit for construction

H. **Hydraulic**

Bridge deck drainage
Stream flow conditions and drift
Passage of flood debris
Scour, effect of pier as an obstruction (shape, width, skew, number of columns)
Bank and pier protection
Consideration of a culvert as an alternate solution
Permit requirements for navigation and stream work limitations

I. **Maintenance**

Concrete vs. Steel
Expansion joints
Bearings
Deck protective systems
Inspection and Maintenance Access (UBIT clearances) (see Figure 2.3.11-1)

J. **Other –** Prior commitments made to other agency officials and individuals of the community
Recommendations resulting from preliminary studies

2.2.4 Permits

A. **Coast Guard –** As outlined in the WSDOT *Design Manual* M 22-01, *Additional Data for Waterway Crossings*, the Bridge and Structures Office is responsible for coordinating and applying for Coast Guard permits for bridges over waterways. The Coast Guard Liaison Engineer in the Bridge Projects Unit of the Bridge and Structures Office handles this.

A determination of whether a bridge project requires a Coast Guard permit is typically determined by Region Environmental during the early scoping phase. This scoping is done before the bridge site data is sent to the Bridge and Structures Design Office/Unit.

The Region Design Engineer should request that the Environmental Coordinator consult with the Coast Guard Liaison Engineer prior to sending the bridge site data if possible.

Generally, tidal-influenced waterways and waterways used for commercial navigation will require Coast Guard permits. See the WSDOT *Design Manual* M 22-01, chapter covering Environmental Permits and Approvals, or the WSDOT *Environmental Procedure Manual* M 31-11, Chapter 520.04

Section 9 Permit – Bridge Work in Navigable Waters, or Chapter 500 Environmental Permitting and PS&E, Table 500-1 for additional information or permit needs and procedures.

For all waterway crossings, the Coast Guard Liaison Engineer is required to initial the Preliminary Plan as to whether a Coast Guard permit or exemption is required. This box regarding Coast Guard permit status is located in the center left margin of the plan. If a permit is required, the permit target date will also be noted. The reduced print, signed by the Coast Guard Liaison Engineer, shall be placed in the job file.

The work on developing the permit application should be started before the bridge site data is complete so that it is ready to be sent to the Coast Guard at least eight months prior to the project ad date. The Coast Guard Liaison Engineer should be given a copy of the preliminary plans from which to develop the Coast Guard Application plan sheets, which become part of the permit.

B. **Other –** All other permits will be the responsibility of the Region (see the WSDOT *Design Manual* M 22-01). The Bridge and Structures Office may be asked to provide information to the Region to assist them in making applications for these permits.

2.2.5 Preliminary Cost Estimate

A preliminary cost estimate should be developed when the bridge type, foundation type, deck area and adjacent retaining walls are determined. At the preliminary stage the cost estimate is based on square-foot costs taken from the Chapter 12 and adjusted for structure specifics. Consult with a Specifications and Estimates Engineer. The preliminary cost estimate is based on recent bidding history on similar structures, degree of difficulty of construction, inflation trends, and length of time until Ad Date, and time for completion of construction. It is considered accurate to within 15%, but is should be accurate enough to preclude a surprise increase at the time of the Engineer's estimate, which is based on completed design quantities. The preliminary cost estimate shall be updated frequently as changes are made to the preliminary plan or new data influences the costs.

After a Preliminary Plan has been developed, but before sending to the Bridge Design Engineer for signature, the Preliminary Plan and cost estimate shall be submitted to one of the Bridge Specifications and Estimates Engineers for review and comment for the structures in the Preliminary Plan. The information presented to the S&E Engineer shall include the complete Preliminary Plan and all backup data previously prepared on costs for the structures (such as preliminary quantity calculations, preliminary foundation type selection, etc,). The S&E Engineer will review the Preliminary Plan, prepare, sign, and date a cost estimate summary sheet, and return the package to the designer. When the Preliminary Plan is presented to the Bridge Design Engineer, the submittal shall include the summary sheet prepared by the S&E Engineer. The summary sheet and backup data will then be placed in the job file. Do not send the summary sheet to the Region.

After submittal of the Preliminary Plan to the Region, the Region shall be notified immediately of any increases in the preliminary cost estimate during the structural design.

2.2.6 Approvals

A. **State Bridge and Structures Architect/Specialists –** For all preliminary plans, the State Bridge and Structures Architect and appropriate specialists should be aware and involved when the designer is first developing the plan. The State Bridge and Structures Architect and specialists should be given a print of the plan by the designer. This is done prior to checking the preliminary plan. The State Bridge and Structures Architect and specialist will review, approve, sign and date the print. This signed print is placed in the job file. If there are any revisions, which affect the aesthetics of the approved preliminary plan, the State Bridge and Structures Architect should be asked to review and approve, by signature, a print showing the revisions, which change elements of aesthetic significance.

For large, multiple bridge projects, the State Bridge and Structures Architect should be contacted for development of a coordinated architectural concept for the project corridor.

The architectural concept for a project corridor is generally developed in draft form and reviewed with the project stakeholders prior to finalizing. When finalized, it should be signed by the Region Administrator or his/her designee.

Approval from the State Bridge and Structures Architect is required on all retaining walls and noise wall aesthetics including finishes and materials, and configuration.

In order to achieve superstructure type optimization and detailing consistency, the following guidelines shall be used for the preparation of all future Preliminary Plans:

- Preliminary Plans for all steel bridges and structures shall be reviewed by the Steel Specialist.
- Preliminary Plans for all concrete bridges and structures shall be reviewed by the Concrete Specialist.
- Detailing of all Preliminary Plans shall be reviewed by the Preliminary Plans Detailing Specialist.

These individuals shall signify their approval by signing the preliminary plan in the Architect/ Specialist block on the first plan sheet, together with the State Bridge and Structures Architect.

B. **Bridge Design –** The Bridge Projects Engineer signs the preliminary plan after it has been checked and approved by the Architect/Specialists. At this point, it is ready for review, approval, and signing by the Bridge Design Engineer and the Bridge and Structures Engineer.

After the Bridge and Structures Engineer has signed the preliminary plan, it is returned to the designer. The designer places the original signed preliminary plan in the job file and enters the names of the signers in the signature block. This preliminary plan will be sent to region for their review and approval.

The transmittal memo includes the preliminary plan and the WSDOT Form 230-038 *Not Included in Bridge Quantities List* and a brief explanation of the preliminary cost estimate. It is addressed to the Region Administrator/Project Development Engineer from the Bridge and Structures Engineer/ Bridge Design Engineer. The memo is reviewed by the Bridge Projects Engineer and is initialed by the Bridge Design Engineer.

The following should be included in the cc distribution list with attachments: FHWA Washington Division Bridge Engineer (when project has Federal Funding), Region Project Engineer, Bridge Projects Engineer, Bridge Design Unit Supervisor, State Geotechnical Engineer, HQ Hydraulics Engineer (when it is a water crossing), Bridge Management Engineer (when it is a replacement), Bridge Preservation Engineer, HQ RR Liaison Engineer (when a railroad is invloved), and Region Traffic Engineer (when ITS is required). The Bridge Scheduling Engineer and the Region and HQ Program Management Engineers should receive a copy of the preliminary plan distribution memo without the attachments.

C. **Region –** Prior to the completion of the preliminary plan, the designer should meet with the Region to discuss the concept, review the list of items to be included in the "Not Included in Bridge Quantities List" and get their input. (This is a list of non-bridge items that appear on the bridge preliminary plan and eventually on the design plans.)

The Region will review the preliminary plan for compliance and agreement with the original site data. They will work to answer any *"Notes to the Region"* that have been listed on the plan. When this review is complete, the Regional Administrator, or his/her designee, will sign the plan. The Region will send back a print of the signed plan with any comments noted in red (additions) and green (deletions) along with responses to the questions raised in the *"Notes to the Region."*

D. **Railroad –** When a railroad is involved with a structure on a Preliminary Plan, the HQ RR Liaison Engineer of the Design Office must be involved during the plan preparation process. A copy of the Preliminary Plan is sent to the HQ RR Liaison Engineer, who then sends a copy to the railroad involved for their comments and approval.

The railroad will respond with approval by letter to the HQ RR Liaison Engineer. A copy of this letter is then routed to the Bridge and Structures Office and then placed in the job file.

For design plans prepared within the Bridge and Structures Office, the Unit Supervisor or lead designer will be responsible for coordinating and providing shoring plans for structures adjacent to railroads. It is recommended that the Construction Support Unit design, prepare, stamp, and sign shoring plans. However, the design unit may elect to design, prepare, stamp, and sign shoring plans.

For consultant prepared design plans, the Unit Supervisor or lead reviewer will be responsible for coordinating and having the consultant design shoring plans for structures adjacent to railroads. The Construction Support Unit has design criteria and sample plan details which can be used by the design units and consultants.

A Construction Support engineer is available to attend design project kick-off meetings if there is a need for railroad shoring plans or other constructability issues associated with the project. Regardless of who prepares the bridge plans, all shoring plans should be reviewed by the Construction Support Unit before they are submitted for railroad review and approval at the 50% Final PS&E stage.

For completed shelf projects, the S&E Engineer will contact the Region Project Engineer and inform the Unit Supervisor or lead reviewer on the need for shoring plans for structures adjacent to railroads. If shoring plans are required, the unit supervisor or lead designer may ask the Construction Support Unit to prepare shoring plans.

At the 50% PS&E plan completion stage or sooner if possible, especially for seismic retrofit project, the S&E Engineer will send four (4) copies of the layout, foundation plan, temporary shoring plans, and appropriate special provision section for structures adjacent to railroads to the HQ RR Liaison Engineer, who will submit this package to the appropriate railroad for review and approval. The shoring plans shall show the pressure loading diagram and calculations to expedite the railroad's review and approval.

2.3 Preliminary Plan Criteria

2.3.1 Highway Crossings

A. **General –** A highway crossing is defined as a grade separation between two intersecting roadways. Naming convention varies slightly between mainline highway crossings and ramp highway crossings, but essentially, all bridges carry one highway, road, or street over the intersecting highway, road, or street.

1. **Mainline Highway Crossings –** Names for mainline highway crossings are defined by the route designation or name of state highway, county road, or city street being carried over another highway, road, or street.

   For example, a bridge included as part of an interchange involving I-205 and SR 14 and providing for passage of traffic on I-205 under SR 14 would be named SR 14 Over I-205 (followed by the bridge number).

2. **Ramp Highway Crossings –** Names for ramp highway crossings are defined by the state highway route numbers being connected, the directions of travel being connected, and the designation or name of the highway, road, or street being bridged.

   For example, a bridge in the Hewitt Avenue Interchange connecting traffic from westbound US 2 to northbound I-5 and passing over Everett Street would be named 2W-5N Ramp Over Everett Street (followed by the bridge number). A bridge connecting traffic from northbound I-5 to westbound SR 518 and passing over northbound I-405 and a ramp connecting southbound I-405 to northbound I-5 would be named 5N-518W Over 405N, 405S-5N (followed by the bridge number).

B. **Bridge Width –** The bridge roadway channelization (configuration of lanes and shoulders) is provided by the region with the Bridge Site Data. For state highways, the roadway geometrics are controlled by the WSDOT *Design Manual.* M 22-01 For city and county arterials, the roadway geometrics are controlled by Chapter IV of the WSDOT *Local Agency Guidelines* M 36-63.

C. **Horizontal Clearances –** Safety dictates that fixed objects be placed as far from the edge of the roadway as is economically feasible. Criteria for minimum horizontal clearances to bridge piers and retaining walls are outlined in the WSDOT *Design Manual* M 22-01. The WSDOT *Design Manual* M 22-01 outlines clear zone and recovery area requirements for horizontal clearances without guardrail or barrier being required.

   Actual horizontal clearances shall be shown in the plan view of the Preliminary Plan (to the nearest 0.1 foot). Minimum horizontal clearances to inclined columns or wall surfaces should be provided at the roadway surface and for a vertical distance of 6′ above the edge of pavement. When bridge end slopes fall within the recovery area, the minimum horizontal clearance should be provided for a vertical distance of 6′ above the fill surface. See Figure 2.3.1-1.

   Bridge piers and abutments ideally should be placed such that the minimum clearances can be satisfied. However, if for structural or economic reasons, the best span arrangement requires a pier to be within clear zone or recovery area, and then guardrail or barrier can be used to mitigate the hazard.

   There are instances where it may not be possible to provide the minimum horizontal clearance even with guardrail or barrier. An example would be placement of a bridge pier in a narrow median. The required column size may be such that it would infringe on the shoulder of the roadway. In such cases, the barrier safety shape would be incorporated into the shape of the column. Barrier or guardrail would need to taper into the pier at a flare rate satisfying the criteria in the WSDOT *Design Manual* M 22-01. See Figure 2.3.1-2. The reduced clearance to the pier would need to be approved by the Region. Horizontal clearances, reduced temporarily for construction, are covered in Section 2.3.9.

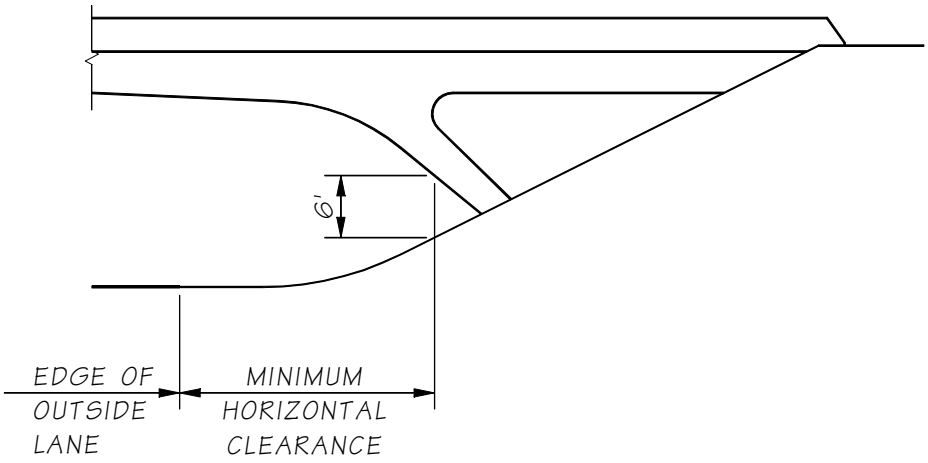

Horizontal Clearance to Incline Piers
Figure 2.3.1-1

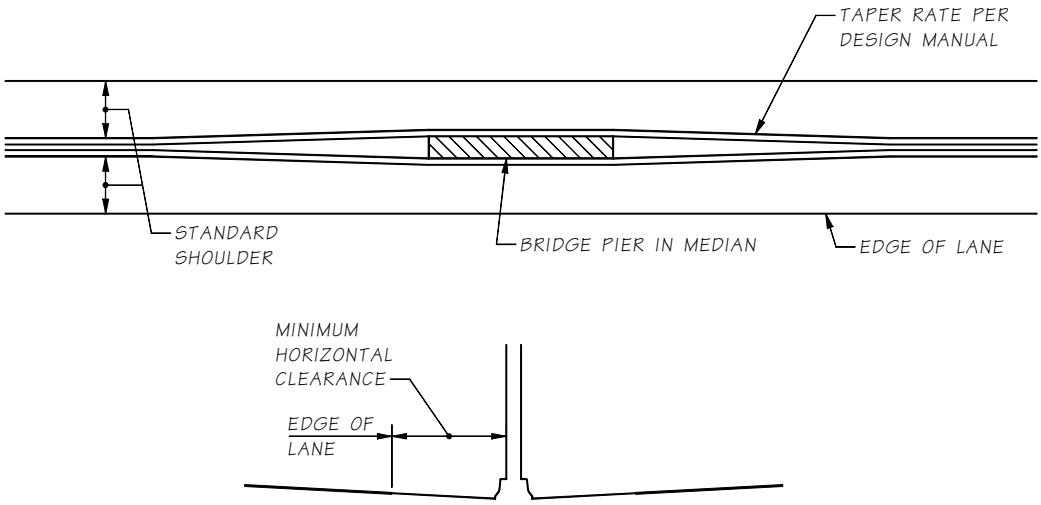

Bridge Pier in Narrow Median
Figure 2.3.1-2

D. **Vertical Clearances –** The required minimum vertical clearances are established by the functional classification of the highway and the construction classification of the project. For state highways, this is as outlined in the WSDOT *Design Manual* M 22-01. For city and county arterials, this is as outlined in Chapter IV of the WSDOT *Local Agency Guidelines* M 36-63.

Actual minimum vertical clearances are shown on the Preliminary Plan (to the nearest 0.1 foot). The approximate location of the minimum vertical clearance is noted in the upper left margin of the plan. For structures crossing divided highways, minimum vertical clearances for both directions are noted.

E. **End Slopes –** The type and rate of end slope used at bridge sites is dependent on several factors. Soil conditions and stability, right of way availability, fill height or depth of cut, roadway alignment and functional classification, and existing site conditions are important.

The region should have made a preliminary determination based on these factors during the preparation of the bridge site data. The side slopes noted on the Roadway Section for the roadway should indicate the type and rate of end slope.

The Materials Laboratory Geotechnical Services Branch will recommend the minimum rate of end slope. This should be compared to the rate recommended in the Roadway Section and to existing site conditions (if applicable). The types of end slopes and bridge slope protection are discussed in the WSDOT *Design Manual* M 22-01. Examples of slope protection are shown in WSDOT *Standard Plans* M 21-01 Section A.

F. **Determination of Bridge Length –** Establishing the location of the end piers for a highway crossing is a function of the profile grade of the overcrossing roadway, the superstructure depth, the minimum vertical and horizontal clearances required for the structure, the profile grade and channelization (including future widening) of the undercrossing roadway, and the type and rate of end slope used.

For the general case of bridges in cut or fill slopes, the control point is where the cut or fill slope plane meets the bottom of roadside ditch or edge of shoulder as applicable. From this point, the fill or cut slope plane is established at the recommended rate up to where the slope plane intersects the grade of the roadway at the shoulder. Following the requirements of WSDOT *Standard Plans* M 21-01 Section A, the back of pavement seat, end of wing wall or end of retaining wall can be established at 3′ behind the slope intersection. See Figure 2.3.1-3

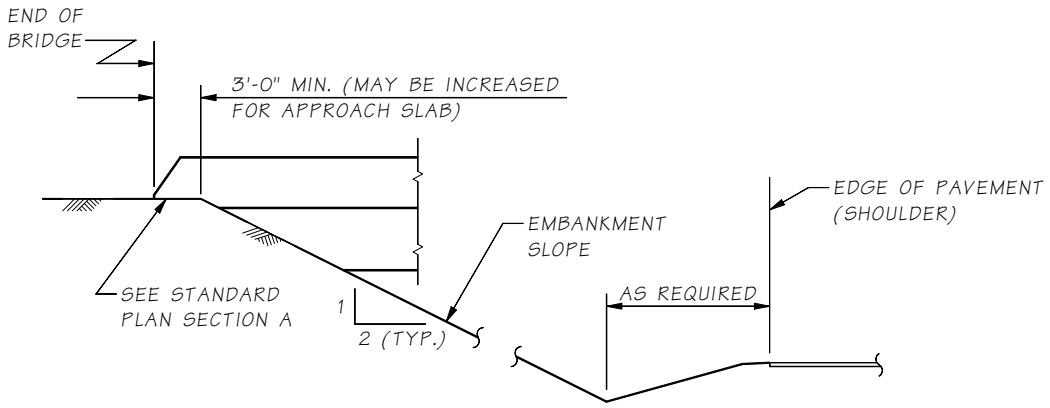

Determination of Bridge Length
Figure 2.3.1-3

For the general case of bridges on wall type abutments or “closed” abutments, the controlling factors are the required horizontal clearance and the size of the abutment. This situation would most likely occur in an urban setting or where right of way or span length is limited.

G. **Pedestrian Crossings –** Pedestrian crossings follow the same format as highway crossings. Geometric criteria for bicycle and pedestrian facilities are established in the WSDOT *Design Manual* M 22-01. Width and clearances would be as established there and as confirmed by region. Minimum vertical clearance over a roadway is given in the WSDOT *Design Manual* M 22-01. Unique items to be addressed with pedestrian facilities include ADA requirements, the railing to be used, handrail requirements, overhead enclosure requirements, and profile grade requirements for ramps and stairs.

H. **Bridge Redundancy –** Design bridges to minimize the risk of catastrophic collapse by using redundant supporting elements (columns and girders).

For substructure design use:

One column minimum for roadways 40′ wide and under. Two columns minimum for roadways over 40′ to 60′. Three columns minimum for roadways over 60′. Collision protection or design for collision loads for piers with one or two columns.

For superstructure design use:

Three girders (webs) minimum for roadways 32′ and under. Four girders (webs) minimum for roadways over 32′. See Appendix 2.3-A2-1 for details.

Note: Any deviation from the above guidelines shall have a written approval by the Bridge Design Engineer.

2.3.2 Railroad Crossings

A. **General –** A railroad crossing is defined as a grade separation between an intersecting highway and a railroad. Names for railroad crossings are defined either as railroad over state highway or state highway over railroad. For example, a bridge carrying BNSF railroad tracks over I-5 would be named BNSF Over I-5 (followed by the bridge number) A bridge carrying I-90 over Union Pacific railroad tracks would be named I-90 Over UPRR (followed by the bridge number).

Requirements for highway/railway grade separations may involve negotiations with the railroad company concerning clearances, geometrics, utilities, and maintenance roads. The railroad's review and approval will be based on the completed Preliminary Plan.

B. **Criteria –** The initial Preliminary Plan shall be prepared in accordance with the criteria of this section to apply uniformly to all railroads. Variance from these criteria will be negotiated with the railroad, when necessary, after a Preliminary Plan has been provided for their review.

C. **Bridge Width –** For highway over railway grade separations the provisions of Section 2.3.1 pertaining to bridge width of highway crossings shall apply. Details for railway over highway grade separations will depend on the specific project and the railroad involved.

D. **Horizontal Clearances –** For railway over highway grade separations, undercrossings, the provisions of Section 2.3.1 pertaining to horizontal clearances for highway crossings shall apply. However, because of the heavy live loading of railroad spans, it is advantageous to reduce the span lengths as much as possible. For railroad undercrossings skewed to the roadway, piers may be placed up to the outside edge of standard shoulders (or 8′ minimum) if certain conditions are met (known future roadway width requirements, structural requirements, satisfactory aesthetics, satisfactory sight distance, barrier protection requirements, etc.).

For railroad overcrossings, minimum horizontal clearances are as noted below:

	Railroad Alone
Fill Section	14′
Cut Section	16′

Horizontal clearance shall be measured from the center of the outside track to the face of pier. When the track is on a curve, the minimum horizontal clearance shall be increased at the rate of 1½″ for each degree of curvature. An additional 8′ of clearance for off-track equipment shall only be provided when specifically requested by the railroad.

The actual minimum horizontal clearances shall be shown in the Plan view of the Preliminary Plan (to the nearest 0.1 foot).

E. **Crash Walls –** Crash walls, when required, shall be designed to conform to the criteria of the *AREMA Manual*. To determine when crash walls are required, consult the following:

Union Pacific Railroad, "Guidelines for Design of Highway Separation Structures over Railroad (Overhead Grade Separation)" *AREMA Manual* WSDOT Railroad Liaison Engineer the Railroad

F. **Vertical Clearances –** For railway over highway grade separations, the provisions of Section 2.3.1 pertaining to vertical clearances of highway crossings shall apply. For highway over railway grade separations, the minimum vertical clearance shall satisfy the requirements of the WSDOT *Design Manual* M 22-01.

The actual minimum vertical clearances shall be shown on the Preliminary Plan (to the nearest 0.1 foot). The approximate location of the minimum vertical clearance is noted in the upper left margin of the plan.

G. **Determination of Bridge Length –** For railway over highway grade separations, the provisions of Section 2.3.1 pertaining to the determination of bridge length shall apply. For highway over railway grade separations, the minimum bridge length shall satisfy the minimum horizontal clearance requirements. The minimum bridge length shall generally satisfy the requirements of Figure 2.3.2-1.

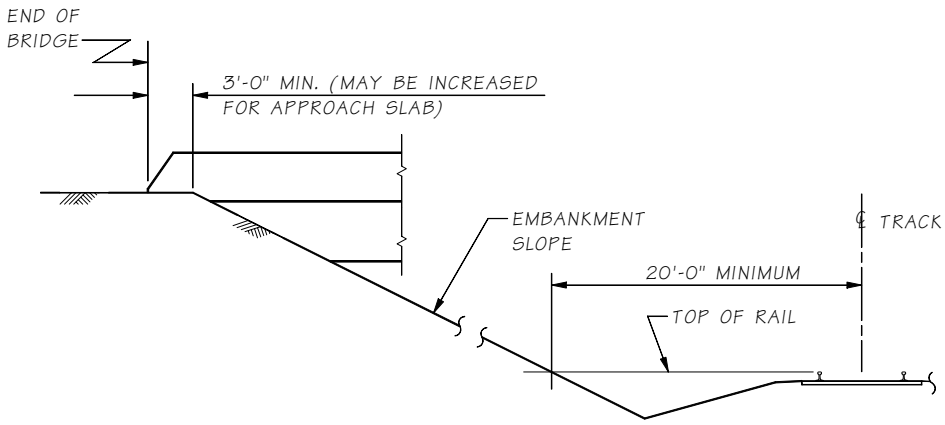

Determination of Bridge Length For a Highway Over Railway Grade Separation
Figure 2.3.2-1

H. **Special Considerations –** For highway over railway grade separations, the top of footings for bridge piers or retaining walls adjacent to railroad tracks shall be 2′ or more below the elevation of the top of tie and shall not have less than 2′ of cover from the finished ground. The footing face shall not be closer than 10′ to the center of the track. Any cofferdams, footings, excavation, etc., encroaching within 10′ of the center of the track requires the approval of the railroad.

I. **Construction Openings –** For railroad clearances, see WSDOT *Design Manual* M 22-01. The minimum horizontal construction opening is 9′ to either side of the centerline of track. The minimum vertical construction opening is 23′-6″ above the top of rail at 6′ offset from the centerline of track. Falsework openings shall be checked to verify that enough space is available for falsework beams to span the required horizontal distances and still provide the minimum vertical falsework clearance. Minimum vertical openings of less than 23′-6″ shall be coordinated with the HQ Railroad Liaison Engineer.

2.3.3 Water Crossings

A. **Bridge Width –** The provisions of Section 2.3.1 pertaining to bridge width for highway crossings apply here.

B. **Horizontal Clearances –** Water crossings over navigable waters requiring clearance for navigation channels shall satisfy the horizontal clearances required by the Coast Guard. Communication with the Coast Guard will be handled through the Coast Guard Liaison Engineer. For bridges over navigable waters, the centerline of the navigation channel and the horizontal clearances (to the nearest 0.1 foot) to the piers or the pier protection shall be shown on the Plan view of the Preliminary Plan. Pier locations shall be reviewed by the HQ Hydraulics unit.

C. **Vertical Clearances –** Vertical clearances for water crossings must satisfy floodway clearance and, where applicable, navigation clearance.

Bridges over navigable waters must satisfy the vertical clearances required by the Coast Guard. Communication with the Coast Guard will be handled through the Coast Guard Liaison Engineer. The actual minimum vertical clearance (to the nearest 0.1 foot) for the channel span shall be shown on the Preliminary Plan. The approximate location of the minimum vertical clearance shall be noted in the upper left margin of the plan. The clearance shall be shown to the water surface as required by the Coast Guard criteria.

Floodway vertical clearance will need to be discussed with the Hydraulics Branch. In accordance with the flood history, nature of the site, character of drift, and other factors, they will determine a minimum vertical clearance for the 100-year flood. The roadway profile and the bridge superstructure depth must accommodate this. The actual minimum vertical clearance to the 100-year flood shall be shown (to the nearest 0.1 foot) on the Preliminary Plan, and the approximate location of the minimum vertical clearance shall be noted in the upper left margin of the plan.

D. **End Slopes –** The type and rate of end slopes for water crossings is similar to that for highway crossings. Soil conditions and stability, fill height, location of toe of fill, existing channel conditions, flood and scour potential, and environmental concerns are all important.

   As with highway crossings, the Region, and Materials Laboratory Geotechnical Services Branch will make preliminary recommendations as to the type and rate of end slope. The Hydraulics Branch will also review the Region's recommendation for slope protection.

E. **Determination of Bridge Length –** Determining the overall length of a water crossing is not as simple and straightforward as for a highway crossing. Floodway requirements and environmental factors have a significant impact on where piers and fill can be placed.

   If a water crossing is required to satisfy floodway and environmental concerns, it will be known by the time the Preliminary Plan has been started. Environmental studies and the Design Report prepared by the region will document any restrictions on fill placement, pier arrangement, and overall floodway clearance. The Hydraulics Branch will need to review the size, shape, and alignment of all bridge piers in the floodway and the subsequent effect they will have on the base flood elevation. The overall bridge length may need to be increased depending on the span arrangement selected and the change in the flood backwater, or justification will need to be documented.

F. **Scour –** The Hydraulics Branch will indicate the anticipated depth of scour at the bridge piers. They will recommend pier shapes to best streamline flow and reduce the scour forces. They will also recommend measures to protect the piers from scour activity or accumulation of drift (use of deep foundations, minimum cover to top of footing, riprap, pier alignment to stream flow, closure walls between pier columns, etc.).

G. **Pier Protection –** For bridges over navigable channels, piers adjacent to the channel may require pier protection such as fenders or pile dolphins. The Coast Guard will determine whether pier protection is required. This determination is based on the horizontal clearance provided for the navigation channel and the type of navigation traffic using the channel.

H. **Construction Access and Time Restrictions –** Water crossings will typically have some sort of construction restrictions associated with them. These must be considered during preliminary plan preparation.

   The time period that the Contractor will be allowed to do work within the waterway may be restricted by regulations administered by various agencies. Depending on the time limitations, a bridge with fewer piers or faster pier construction may be more advantageous even if more expensive.

   Contractor access to the water may also be restricted. Shore areas supporting certain plant species are sometimes classified as wetlands. A work trestle may be necessary in order to work in or gain access through such areas. Work trestles may also be necessary for bridge removal as well as new bridge construction. Work trestle feasibility, location, staging, deck area and approximate number of piles, and estimated cost need to be determined to inform the Region as part of the bridge preliminary plan.

2.3.4 Bridge Widenings

A. **Bridge Width –** The provisions of Section 2.3.1 pertaining to bridge width for highway crossings shall apply. In most cases, the width to be provided by the widening will be what is called for by the design standards, unless a deviation is approved.

B. **Traffic Restrictions –** Bridge widenings involve traffic restrictions on the widened bridge and, if applicable, on the lanes below the bridge. The bridge site data submitted by the region should contain information regarding temporary lane widths and staging configurations. This information should be checked to be certain that the existing bridge width, and the bridge roadway width during the intermediate construction stages of the bridge are sufficient for the lane widths, shy distances, temporary barriers, and construction room for the contractor. These temporary lane widths and shy distances are noted on the Preliminary Plan. The temporary lane widths and shy distances on the roadway beneath the bridge being widened should also be checked to ensure adequate clearance is available for any substructure construction.

C. **Construction Sequence –** A construction sequence shall be developed using the traffic restriction data in the bridge site data. The construction sequence shall take into account the necessary steps for construction of the bridge widening including both the substructure and superstructure. Placement of equipment is critical because of limited access and working space limitations. Space is required for cranes to construct shafts and erect the girders. Consult the Construction Support Unit for crane information, such as: boom angle, capacities, working loads, working radius, and crane footprint. Construction work off of and adjacent to the structure and the requirements of traffic flow on and below the structure shall be taken into account. Generally, cranes are not allowed to lift loads while supported from the existing structure. Checks shall be made to be certain that girder spacing, closure pours, and removal work are all compatible with the traffic arrangements.

   Projects with several bridges being widened at the same time should have sequencing that is compatible with the Region's traffic plans during construction and that allow the Contractor room to work. It is important to meet with the Region project staff to assure that the construction staging and channelization of traffic during construction is feasible and minimizes impact to the traveling public.

2.3.5 Detour Structures

A. **Bridge Width –** The lane widths, shy distances, and overall roadway widths for detour structures are determined by the Region. Review and approval of detour roadway widths is done by the HQ Traffic Office.

B. **Live Load –** All detour structures shall be designed for 75% of HL-93 live load unless approved otherwise by the Bridge Design Engineer. Construction requirements, such as a year long expected use, and staging are sufficient reasons to justify designing for a higher live load of HL-93. Use of an HL-93 live load shall be approved by the Bridge Design Engineer.

2.3.6 Retaining Walls and Noise Walls

The requirements for Preliminary Plans for retaining walls and noise walls are similar to the requirements for bridges. The plan and elevation views define the overall limits and the geometry of the wall. The section view will show general structural elements that are part of the wall and the surface finish of the wall face.

The most common types of walls are outlined in Chapter 8 of this manual and the WSDOT *Design Manual* M 22-01. The Bridge and Structures Office is responsible for Preliminary Plans for all nonstandard walls (retaining walls and noise walls) as spelled out in the WSDOT *Design Manual* M 22-01.

2.3.7 Bridge Deck Drainage

The Hydraulics Branch provides a review of the Preliminary Plan with respect to the requirements for bridge deck drainage. An 11″x17″ print shall be provided to the Hydraulics Branch for their review as soon as the Preliminary Plan has been developed. The length and width of the structure, profile grade, superelevation diagram, and any other pertinent information (such as locations of drainage off the structure) should be shown on the plan. For work with existing structures, the locations of any and all bridge drains shall be noted.

The Hydraulics Branch or the Region Hydraulics staff will determine the type of drains necessary (if any), the location, and spacing requirements. They will furnish any details or modifications required for special drains or special situations.

If low points of sag vertical curves or superelevation crossovers occur within the limits of the bridge, the region should be asked to revise their geometrics to place these features outside the limits of the bridge. If such revisions cannot be made, the Hydraulics Branch will provide details to handle drainage with bridge drains on the structure.

2.3.8 Bridge Deck Protection Systems

An appropriate Bridge Deck Protection System shall be selected for each bridge in accordance with Section 5.7.4. The Preliminary Plan shall note in the lower left margin the type of Bridge Deck Protective System to be utilized on the bridge.

2.3.9 Construction Clearances

Most projects involve construction in and around traffic. Both traffic and construction must be accommodated. Construction clearances and working room must be reviewed at the preliminary plan stage to verify bridge constructability.

For construction clearances for roadways, the Region shall supply the necessary traffic staging information with the bridge site data. This includes temporary lane widths and shoulder or shy distances, allowable or necessary alignment shifts, and any special minimum vertical clearances. With this information, the designer can establish the falsework opening or construction opening.

The horizontal dimension of the falsework or construction opening shall be measured normal to the alignment of the road which the falsework spans. The horizontal dimension of the falsework or construction opening shall be the sum of the temporary traffic lane widths and shoulder or shy distances, plus two 2′ widths for the temporary concrete barriers, plus additional 2′ shy distances behind the temporary barriers. For multi-span falsework openings, a minimum of 2′, and preferably 4′, shall be used for the interior support width. This interior support shall also have 2′ shy on both sides to the two 2-foot wide temporary concrete barriers that will flank the interior support.

The minimum vertical clearance of the construction opening shall normally be 16′-6″ or as specified by the Region. The vertical space available for the falsework must be deep to accommodate the falsework stringers, camber strips, deck, and all deflections. If the necessary depth is greater than the space available, either the minimum vertical clearance for the falsework shall be reduced or the horizontal clearance and span for the falsework shall be reduced, or the profile grade of the structure shall be raised. Any of these alternatives shall be approved by the Region.

Once the construction clearances have been determined the designer should meet with the region to review the construction clearances to ensure compatibility with the construction staging. This review should take place prior to finalizing the preliminary bridge plan.

For railroads, see Section 2.3.2H.

2.3.10 Design Guides for Falsework Depth Requirements

Where falsework is required to support construction of cast-in-place superstructure or segmental elements, the designer of the Preliminary Plan shall confirm with the Region the minimum construction opening. See Section 2.3.9

The bridge designer shall consult with the Construction Support Engineer on falsework depth requirements outlined below.

Bridge designers shall evaluate falsework depth requirements based on the following guidelines:

A. **Falsework Spans < 36′ and No Skews –** No design is necessary. Provide for minimum vertical clearance and a minimum falsework depth of 4′ to accommodate:

   W36X___ steel beam sections
   ¾″ camber strip
   ⅝″plywood
   4 x 4 joists
   6″ depth for segmental falsework release

B. **Falsework Spans > 36′ or Spans with Skews or Limited Falsework Depth –** While the falsework or construction openings are measured normal to the alignment which the falsework spans, the falsework span is measured parallel to the bridge alignment.

   The Preliminary Plan designer shall perform preliminary design of the falsework sufficiently to determine its geometric and structural feasibility. Shallow, heavy, close-spaced wide-flange steel beams may be required to meet the span requirements within the available depth. The preliminary design shall be based on design guides in the *Standard Specifications* 6-02.3(17). Beams shall be designed parallel to the longitudinal axis of the bridge. The falsework span deflection shall be limited according to the *Standard Specifications* 6-02.3(17)B: generally span/360 for a single concrete placement, such as a slab, and span/500 for successive concrete placement forming a composite structure. This limits the stresses in the new structure from the construction and concrete placement sequences. Beam sizes shall be shown in the final plans (and in the Preliminary Plans as required) with the Contractor having the option of submitting an alternate design. The designer shall verify availability of the beam sizes shown in the plans.

C. **Bridge Widenings –** For bridge widenings where the available depth for the falsework is fixed, designers shall design falsework using shallower and heavier steel beams to fit within the available depth. Beam sizes and details shall be shown in the final plans (and in the Preliminary Plans as required) with the Contractor having the option of using an alternate design. The designer shall verify availability of the beam sizes shown in the plans.

   In some cases it may be appropriate to consider a shallower superstructure widening, but with similar stiffness, in order to accommodate the falsework and vertical clearance.

D. **Bridge with Skews –** Falsework beams shall be laid out and designed for spans parallel to the bridge centerline or perpendicular to the main axis of bending. The centerline of falsework beams shall be located within 2′ of the bridge girder stems and preferably directly under the stems or webs in accordance with the WSDOT *Standard Specifications* M 41-10, Section 6-02.3(17)E. Falsework beams placed normal to the skew or splayed complicate camber calculations and shall be avoided.

2.3.11 Inspection and Maintenance Access

A. **General –** FHWA mandates that bridges be inspected every two years. The BPO inspectors are required to access bridge components to within 3′ for visual inspection and to access bearings close enough to measure movement. Maintenance personnel need to access damaged members and locations that may collect debris. This is accomplished by using many methods. Safety cables, ladders, bucket trucks, Under Bridge Inspection Truck (UBIT), (see Figure 2.3.11-1), and under bridge travelers are just a few of the most common methods. Preliminary Plan designers need to be aware of these requirements and prepare designs that allow access for bridge inspectors and maintenance personnel throughout the Preliminary Plan and TS&L planning phases.

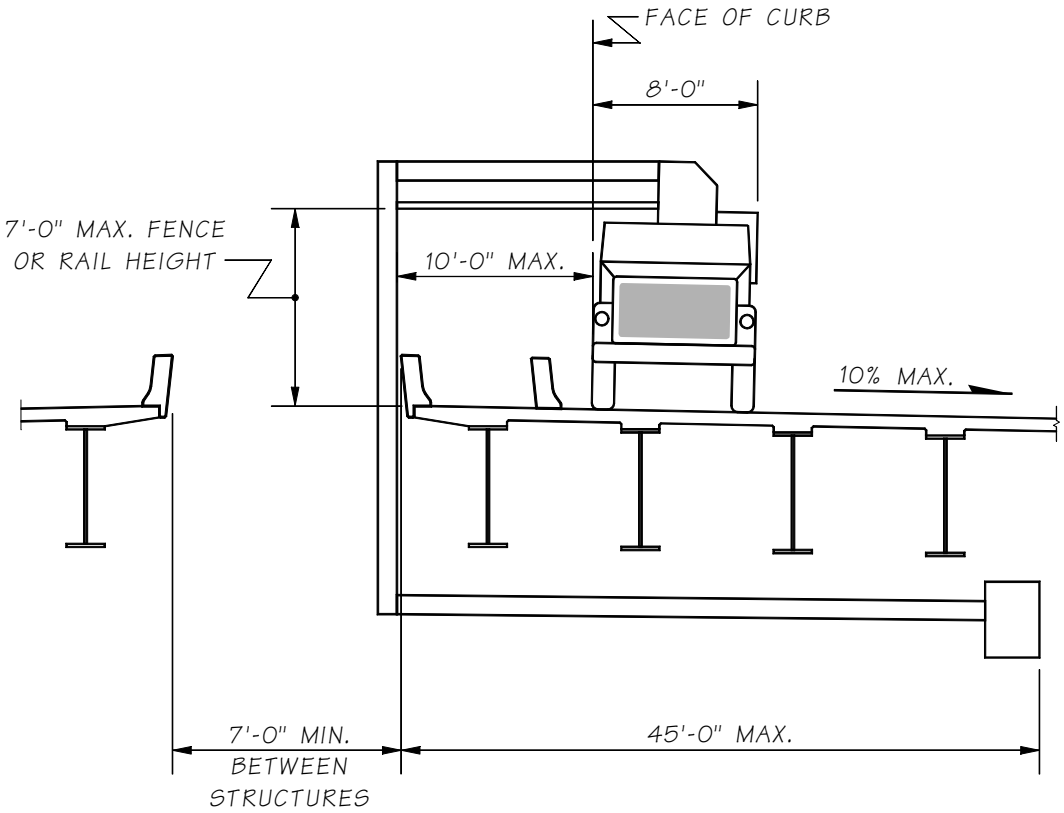

Limits of Under Bridge Inspection Truck

Figure 2.3.11-1

B. **Safety Cables –** Safety cables strung on steel plate girders or trusses allow for walking access. Care must be given to the application and location. Built-up plate girder bridges are detailed with a safety cable for inspectors walking the bottom flange. However, when the girders become more than 8′ deep, the inspection of the top flange and top lateral connections becomes difficult to access. It is not feasible for the inspectors to stand on the bottom flanges when the girders are less than 5′ deep. On large trusses, large gusset plates (3′ or more wide) are difficult to circumvent. Tie-off cables are best located on the interior side of the exterior girder of the bridge except at large gusset plates. At these locations, cables or lanyard anchors should be placed on the inside face of the truss so inspectors can utilize bottom lateral gusset plates to stand on while traversing around the main truss gusset plates.

C. **Travelers –** Under bridge travelers, placed on rails that remain permanently on the bridge, can be considered on large steel structures. This is an expensive option, but it should be evaluated for large bridges with high ADT because access to the bridge would be limited by traffic windows that specify when a lane can be closed. Some bridges are restricted to weekend UBIT inspection for this reason.

D. **Abutment Slopes –** Slopes in front of abutments shall provide enough overhead clearance to the bottom of the superstructure to access bearings for inspection and possible replacement (usually 3′ minimum).

E. **Inspection Lighting and Access**

1. **Reinforced Concrete Box and Post-Tensioned Concrete Box**
   - For box girders with less than 4 feet inside clear height, inspection lighting, and access need not be provided. Utilities and/or restrainers will not be permitted inside the girder cell.
   - For box girders with 4 feet or more inside clear height, but less than 6.5 feet, inspection lighting and access shall be provided only if utilities and/or restrainers are provided inside the box girder.
   - For box girders with 6.5 feet or more inside clear height, inspection lighting, and access shall always be provided.

2. **Prestessed Concrete Tub Girders**
   - Bridge inspection lighting, and access shall not be provided. Utilities and/or restrainers will not be permitted inside the girder.

3. **Composite Steel Box Girders**
   - All steel box or tub girders shall have inspection lighting and access.
   - Inside clear height shall be 5 feet or greater to provide reasonable inspection access.

2.4 Selection of Structure Type

2.4.1 Bridge Types

See Appendix 2.4-A1-1 for a bar graph comparing structure type, span range and cost range.

The required superstructure depth is determined during the preliminary plan development process. The AASHTO LRFD Specifications in Section 2.5.2.6.3 show traditional minimum depths for constant depth superstructures. WSDOT has developed superstructure depth-to-span ratios based on past experience.

The AASHTO LRFD Specifications, Section 2.5.2.6.1, states that it is optional to check deflection criteria, except in a few specific cases. The WSDOT criteria is to check the live load deflection for all structures as specified in AASHTO LRFD Specifications, Section 3.6.1.3.2 and 2.5.2.6.2.

The superstructure depth is used to establish the vertical clearance that is available below the superstructure. For preliminary plans, the designer should use the more conservative depth determined from either the AASHTO LRFD criteria or the WSDOT criteria outlined below. In either case, the minimum depth includes the deck thickness. For both simple and continuous spans, the span length is the horizontal distance between centerlines of bearings.

Refer to Section 2.3.11 for inspection and maintenance access requirements. Superstructure depth may be influenced when inspection lighting and acees is required for certain bridge types.

The superstructure depth may be refined during the final design phase. It is assumed that any refinement will result in a reduced superstructure depth so the vertical clearance is not reduced from that shown in the preliminary plan. However, when profile grade limitations restrict superstructure depth, the preliminary plan designer shall investigate and/or work with the structural designer to determine a superstructure type and depth that will fit the requirements.

A. **Reinforced Concrete Slab**

1. **Application –** Used for simple and continuous spans up to 60′.
2. **Characteristics –** Design details and falsework relatively simple. Shortest construction time for any cast-in-place structure. Correction for anticipated falsework settlement must be included in the dead load camber curve because of the single concrete placement sequence.
3. **Depth/Span Ratios**

   a. **Constant Depth**

Simple span	1/22
Continuous spans	1/25

   b. **Variable Depth –** Adjust ratios to account for change in relative stiffness of positive and negative moment sections.

B. **Reinforced Concrete Tee-Beam**

1. **Application –** This type of Super Structure is not recommended for new bridges. It could only be used for bridge widening and bridges with tight curvature or unusual geometry.

   Used for continuous spans 30′ to 60′. Has been used for longer spans with inclined leg piers.
2. **Characteristics –** Forming and falsework is more complicated than for a concrete slab. Construction time is longer than for a concrete slab.

3. **Depth/Span Ratios**

   a. **Constant Depth**

Simple spans	1/13
Continuous spans	1/15

   b. **Variable Depth –** Adjust ratios to account for change in relative stiffness of positive and negative moment sections.

C. **Reinforced Concrete Box Girder –** WSDOT restricts the use of cast-in-place reinforced concrete box girder for bridge superstructure. This type of superstructure may only be used for bridges with tight curvatures or irregular geometry upon Bridge Design Engineer approval.

1. **Application –** This type of super structure is not recommended for new bridges. It could only be used for bridge widening and bridges with tight curvature or unusual geometry.

   Used for continuous spans 50′ to 120′. Maximum simple span 100′ to limit excessive dead load deflections.

2. **Characteristics –** Forming and falsework is somewhat complicated. Construction time is approximately the same as for a tee-beam. High torsional resistance makes it desirable for curved alignments.

3. **Depth/Span Ratios***

   a. **Constant Depth**

Simple spans	1/18
Continuous spans	1/20

   b. **Variable Depth –** Adjust ratios to account for change in relative stiffness of positive and negative moment sections.

   *If the configuration of the exterior web is sloped and curved, a larger depth/span ratio may be necessary.

D. **Post-tensioned Concrete Box Girder**

1. **Application –** Normally used for continuous spans longer than 120′ or simple spans longer than 100′. Should be considered for shorter spans if a shallower structure depth is needed.

2. **Characteristics –** Construction time is somewhat longer due to post-tensioning operations. High torsional resistance makes it desirable for curved alignments.

3. **Depth/Span Ratios***

   a. **Constant Depth**

Simple spans	1/20.5
Continuous spans	1/25

   b. **Variable Depth –** Two span structures

At Center of span	1/25
At Intermediate pier	1/12.5
Multi-span structures	
At Center of span	1/36
At Intermediate pier	1/18

   *If the configuration of the exterior web is sloped and curved, a larger depth/span ratio may be necessary.

E. **Prestressed Concrete Sections**

1. **Application –** Local precast fabricators have several standard forms available for precast concrete sections based on the WSDOT standard girder series. These are versatile enough to cover a wide variety of span lengths.

   WSDOT standard girders are:

   a. WF100G, WF95G, WF83G, WF74G, WF58G, WF50G, WF42G, WF36G, W74G, W58G, W50G, and W42G precast, prestressed concrete I-girders requiring a cast-in-place concrete bridge deck used for spans less than 200′. The number (eg. 95) specifies the girder depth in inches.

      WF95PTG, WF83PTG and WF74PTG post-tensioned, precast segmental I-girders with cast-in-place concrete bridge deck use for simple span up to 230′, and continuous span up to 250′ with continuous post-tensioning over the intermediate piers.

   b. U**G* and UF**G* precast, prestressed concrete tub girders requiring a cast-in-place concrete bridge deck are used for spans less than 140′. "U" specifies webs without flanges, "UF" specifies webs with flanges, ** specifies the girder depth in inches, and * specifies the bottom flange width in feet. U**G* girders have been precast as shallow as 26″.

      Post-tensioned, precast, prestressed tub girders with cast-in-place concrete bridge deck are used for simple span up to 160′ and continuous span up to 200′.

   c. W65DG, W53DG, W41DG, and W35DG precast, prestressed concrete decked bulb tee girders requiring an HMA overlay roadway surface used for span less than 150′, with the Average Daily Truck limitation of 30,000 or less.

   d. W62BTG, W38BTG, and W32BTG precast, prestressed concrete bulb tee girders requiring a cast-in-place concrete deck for simple spans up to 130′.

   e. 12-inch, 18-inch, 26-inch, 30-inch, and 36-inch precast, prestressed slabs requiring 5″ minimum cast-in-place slab used for spans less than 100′.

   f. 26-inch precast, prestressed ribbed girder, deck double tee, used for span less than 60′, and double tee members requiring an HMA overlay roadway surface used for span less than 40′.

2. **Characteristics –** Superstructure design is quick for pretensioned girders with proven user-friendly software (PGSuper, PGSplice, and QConBridge)

   Construction details and forming are fairly simple. Construction time is less than for a cast-in-place bridge. Little or no falsework is required. Falsework over traffic is usually not required; construction time over existing traffic is reduced.

   Precast girders usually require that the bridge roadway superelevation transitions begin and end at or near piers; location of piers should consider this. The Region may be requested to adjust these transition points if possible.

   Fully reinforced, composite 8 inch cast-in-place deck slabs continuous over interior piers or reinforced 5 inch cast-in-place deck slabs continuous over interior piers have been used with e. and f.

F. **Composite Steel Plate Girder**

1. **Application –** Used for simple spans up to 260′ and for continuous spans from 120′ to 400′. Relatively low dead load when compared to a concrete superstructure makes this bridge type an asset in areas where foundation materials are poor.

2. **Characteristics –** Construction details and forming are fairly simple Construction time is comparatively short. Shipping and erecting of large sections must be reviewed. Cost of maintenance is higher than for concrete bridges. Current cost information should be considered because of changing steel market conditions.

3. **Depth/Span Ratios**

   a. **Constant Depth**

Simple spans	1/22
Continuous spans	1/25

   b. **Variable Depth**

@ Center of span	1/40
@ Intermediate pier	1/20

G. **Composite Steel Box Girder**

1. **Use –** Used for simple spans up to 260′ and for continuous spans from 120′ to 400′. Relatively low dead load when compared to a concrete superstructure makes this bridge type an asset in areas where foundation materials are poor.

   Inside clear height of less than 5 feet shall not be used because reasonable inspection access cannot be provided.

2. **Characteristics –** Construction details and forming are more difficult than for a steel plate girder. Shipping and erecting of large sections must be reviewed. Current cost information should be considered because of changing steel market conditions.

3. **Depth/Span Ratios**

   a. **Constant Depth**

Simple spans	1/22
Continuous spans	1/25

   b. **Variable Depth**

At Center of span	1/40
At Intermediate pier	1/20

   Note: Sloping webs are not used on box girders of variable depth.

H. **Steel Truss**

1. **Application –** Used for simple spans up to 300′ and for continuous spans up to 1,200′. Used where vertical clearance requirements dictate a shallow superstructure and long spans or where terrain dictates long spans and construction by cantilever method.

2. **Characteristics –** Construction details are numerous and can be complex. Cantilever construction method can facilitate construction over inaccessible areas. Through trusses are discouraged because of the resulting restricted horizontal and vertical clearances for the roadway.

3. **Depth/Span Ratios**

   a. Simple spans 1/16

   b. Continuous spans

   @ Center of span 1/18
   @ Intermediate pier 1/9

I. **Segmental Concrete Box Girder**

1. **Application –** Used for continuous spans from 200′ to 700′. Used where site dictates long spans and construction by cantilever method.

2. **Characteristics –** Use of travelers for the form apparatus facilitates the cantilever construction method enabling long-span construction without falsework. Precast concrete segments may be used. Tight geometric control is required during construction to ensure proper alignment.

3. **Depth/Span Ratios**

   Variable depth
   At Center of span 1/50
   At Intermediate pier 1/20

J. **Railroad Bridges**

1. **Use –** For railway over highway grade separations, most railroad companies prefer simple span steel construction. This is to simplify repair and reconstruction in the event of derailment or some other damage to the structure.

2. **Characteristics –** The heavier loads of the railroad live load require deeper and stiffer members than for highway bridges. Through girders can be used to reduce overall structure depth if the railroad concurs. Piers should be normal to the railroad to eliminate skew loading effects.

3. **Depth/Span Ratios**

   Constant depth
   Simple spans 1/12
   Continuous two span 1/14
   Continuous multi-span 1/15

K. **Timber**

1. **Use –** Generally used for spans under 40′. Usually used for detour bridges and other temporary structures. Timber bridges are not recommend for WSDOT Bridges.

2. **Characteristics –** Excellent for short-term duration as for a detour. Simple design and details.

3. **Depth/Span Ratios**

   Constant depth
   Simple span – Timber beam 1/10
   Simple span – Glulam beam 1/12
   Continuous spans 1/14

L. **Other –** Bridge types such as cable-stayed, suspension, arch, tied arch, and floating bridges have special and limited applications. The use of these bridge types is generally dictated by site conditions. Preliminary design studies will generally be done when these types of structures are considered.

2.4.2 Wall Types

Retaining walls, wingwalls, curtain walls, and tall closed abutment walls may be used where required to shorten spans or superstructure length or to reduce the width of approach fills. The process of selecting a type of retaining wall should economically satisfy structural, functional, and aesthetic requirements and other considerations relevant to a specific site. A detailed listing of the common wall types and their characteristics can be found in Chapter 8.

2.5 Aesthetic Considerations

2.5.1 General Visual Impact

Bridge, retaining walls and noise walls have a strong visual impact in any landscape. Steps must be taken to assure that even the most basic structure will complement rather than detract from it's surroundings. The EIS and bridge site data submitted by the Region should each contain a discussion on the aesthetic importance of the project site. This commentary, together with submitted video and photographs, will help the designer determine the appropriate structure type.

The State Bridge and Structures Architect should be contacted early in the preliminary bridge plan process for input on aesthetics. Normally, a visit to the bridge site with the State Bridge and Structures Architect and Region design personnel should be made.

Aesthetics is a very subjective element that must be factored into the design process in the otherwise very quantitative field of structural engineering. Bridges that are structurally efficient using the least material possible are generally visually well proportioned. However, the details such as pier walls, columns, and crossbeams require special attention to ensure a structure that will enhance the general vicinity.

For large projects incorporating several to many bridges and retaining walls, an architectural theme is frequently developed to bring consistency in structure type, details, and architectural appointments. The preliminary plan designer shall work with the State Bridge and Structures Architect to implement the theme.

2.5.2 End Piers

A. **Wingwalls –** The size and exposure of the wingwall at the end pier should balance, visually, with the depth and type of superstructure used. For example, a prestressed girder structure fits best visually with a 15′ wingwall (or curtain wall/retaining wall). However, there are instances where a 20′ wingwall (or curtain wall/retaining wall) may be used with a prestressed girder (maximizing a span in a remote area, for example or with deep girders where they are proportionally better in appearance). The use of a 20′ wingwall shall be approved by the Bridge Design Engineer and the State Bridge and Structures Architect.

   It is less expensive for bridges of greater than 40′ of overall width to be designed with wingwalls (or curtain wall/retaining wall) than to use a longer superstructure.

B. **Retaining Walls –** For structures at sites where profile, right of way, and alignment dictate the use of high exposed wall-type abutments for the end piers, retaining walls that flank the approach roadway can be used to retain the roadway fill and reduce the overall structure length. Stepped walls are often used to break up the height, and allow for landscape planting. A curtain wall runs between the bridge abutment and the heel of the abutment footing. In this way, the joint in the retaining wall stem can coincide with the joint between the abutment footing and the retaining wall footing. This simplifies design and provides a convenient breaking point between design responsibilities if the retaining walls happen to be the responsibility of the Region. The length shown for the curtain wall dimension is an estimated dimension based on experience and preliminary foundation assumptions. It can be revised under design to satisfy the intent of having the wall joint coincide with the end of the abutment footing.

C. **Slope Protection –** The Region is responsible for making initial recommendations regarding slope protection. It should be compatible with the site and should match what has been used at other bridges in the vicinity. The type selected shall be shown on the Preliminary Plan. It shall be noted on the “Not Included in Bridge Quantities” list.

D. **Noise Walls –** Approval of the State Bridge and Structures Architect is required for the final selection of noise wall appearance, finish, materials and configuration.

2.5.3 Intermediate Piers

The size, shape, and spacing of the intermediate pier elements must satisfy two criteria. They must be correctly sized and detailed to efficiently handle the structural loads required by the design and shaped to enhance the aesthetics of the structure.

The primary view of the pier must be considered. For structures that cross over another roadway, the primary view will be a section normal to the roadway. This may not always be the same view as shown on the Preliminary Plan as with a skewed structure, for example. This primary view should be the focus of the aesthetic review.

Tapers and flares on columns should be kept simple and structurally functional. Fabrication and constructability of the formwork of the pier must be kept in mind. Crossbeam ends should be carefully reviewed. Skewed bridges and bridges with steep profile grades or those in sharp vertical curves will require special attention to detail.

Column spacing should not be so small as to create a cluttered look. Column spacing should be proportioned to maintain a reasonable crossbeam span balance.

2.5.4 Barrier and Wall Surface Treatments

A. **Plain Surface Finish –** This finish will normally be used on structures that do not have a high degree of visibility or where existing conditions warrant. A bridge in a remote area or a bridge among several existing bridges all having a plain finish would be examples.

B. **Formliner Finishes –** These finish are the most common and an easy way to add a decorative texture to a structure. Variations on this type of finish can be used for special cases. The specific areas to receive this finish should be reviewed with the State Bridge and Structures Architect.

C. **Pigmented Sealer –** The use of a pigmented sealer is used to control graffiti and can also be an aesthetic enhancement. Most commonly it is always used in urban areas. The selection should be reviewed with the Bridge Architect and the Region.

D. **Architectural Details –** Rustication grooves, relief panels, pilasters, and decorative finishes may visually improve appearance at transitions between different structure types such as cast-in-place abutments to structural earth retaining walls. Contact the State Bridge and Structures Architect for guidance.

   In special circumstances custom designs may be provided. Designs rising to the level of art shall be subject to the procedures outlined in the *Desing Manual* M 22-01

2.5.5 Superstructure

The horizontal elements of the bridge are perhaps the strongest features. The sizing of the structure depth based on the span/depth ratios in Section 2.4.1, will generally produce a balanced relationship.

Designs rising to the level of "Art" shall be subject to the procedures outlined in the WSDOT *Design Manual* M 22-01.

Haunches or rounding of girders at the piers can enhance the structure's appearance. The use of such features should be kept within reason considering fabrication of materials and construction of formwork. The amount of haunch should be carefully reviewed for overall balance from the primary viewing perspective. Haunches are not limited to cast-in-place superstructures, but may be used in special cases on precast, prestressed I girders. They require job-specific forms which increase cost, and standard design software is not directly applicable.

The slab overhang dimension should approach that used for the structure depth. This dimension should be balanced between what looks good for aesthetics and what is possible with a reasonable slab thickness and reinforcement.

For box girders, the exterior webs can be sloped, but vertical webs are preferred. The amount of slope should not exceed l½: l for structural reasons, and should be limited to 4:1 if sloped webs are desired. Sloped webs should only be used in locations of high aesthetic impact.

When using precast, prestressed girders, all spans shall be the same series, unless approved otherwise by the Bridge and Structures Engineer.

2.6 Miscellaneous

2.6.1 Structure Costs

See Section 12.3 for preparing cost estimates for preliminary bridge design.

2.6.2 Handling and Shipping Precast Members and Steel Beams

Bridges utilizing precast concrete beams or steel beams need to have their access routes checked and sites reviewed to be certain that the beams can be transported to the site. It must also be determined that they can be erected once they reach the site.

Both the size and the weight of the beams must be checked. Likely routes to the site must be adequate to handle the truck and trailer hauling the beams. Avoid narrow roads with sharp turns, steep grades, and/or load-rated bridges, which may prevent the beams from reaching the site. The Bridge Preservation Office should be consulted for limitations on hauling lengths and weights.

Generally 200 kips is the maximum weight of a girder that may be hauled by truck. When the weight of a prestressed concrete girder cast in one piece exceeds 160 kips, it may be required to include a post-tensioned 2 or 3-piece option detailed in the contract plans.

The site should be reviewed for adequate space for the contractor to set up the cranes and equipment necessary to pick up and place the girders. The reach and boom angle should be checked and should accommodate standard cranes.

2.6.3 Salvage of Materials

When a bridge is being replaced or widened, the material being removed should be reviewed for anything that WSDOT may want to salvage. Items such as aluminum rail, luminaire poles, sign structures, and steel beams should be identified for possible salvage. The Region should be asked if such items are to be salvaged since they will be responsible for storage and inventory of these items.

2.7 WSDOT Standard Highway Bridge

2.7.1 Design Elements

The following are standard design elements for bridges carrying highway traffic. They are meant to provide a generic base for consistent, clean looking bridges, and to reduce design and construction costs. Modification of some elements may be required, depending on site conditions. This should be determined on a case-by-case basis during the preliminary plan stage of the design process.

A. **General –** Fractured Fin Finish shall be used on the exterior face of the traffic barrier. All other surfaces shall be Plain Surface Finish.

Exposed faces of wingwalls, columns, and abutments shall be vertical. The exterior face of the traffic barrier and the end of the intermediate pier crossbeam and diaphragm shall have a 1:12 backslope.

B. **Substructure –** End piers use the following details:

15′ wingwalls with prestressed girders up to 74″ in depth or a combination of curtain wall/retaining walls.

Stub abutment wall with vertical face. Footing elevation, pile type (if required), and setback dimension are determined from recommendations in the Materials Laboratory Geotechnical Services Branch Geotechnical Report.

Intermediate piers use the following details:

"Semi-raised" Crossbeams: The crossbeam below the girders is designed for the girder and slab dead load, and construction loads. The crossbeam and the diaphragm together are designed for all live loads and composite dead loads. The minimum depth of the crossbeam shall be 3′.

"Raised" Crossbeams: The crossbeam is at the same level as the girders are designed for all dead and live loads. "Raised" crossbeams are only used in conjunction with Prestressed Concrete Tub Girders.

Round Columns: Columns shall be 3′ to 6′ in diameter. Dimensions are constant full height with no tapers. Bridges with roadway widths of 40′ or less will generally be single column piers. Bridges with roadway widths of greater the 40′ shall have two or more columns, following the criteria established in Section 2.3.1.H. Oval or rectangular column may be used if required for structural performance or bridge visual.

C. **Superstructure –** Concrete Slab: 7½ inch minimum thickness, with the top and bottom mat being epoxy coated steel reinforcing bars.

Prestressed Girders: Girder spacing will vary depending on roadway width and span length. The slab overhang dimension is approximately half of the girder spacing. Girder spacing typically ranges between 6′ and 12′.

Intermediate Diaphragms: Locate at the midspan for girders up to 80′ long. Locate at third points for girders between 80′ and 150′ long and at quarter points for spans over 150′.

End Diaphragms: "End Wall on Girder" type.

Traffic Barrier: "F-shape" or Single-sloped barrier.

Fixed Diaphragm at Inter. Piers: Full or partial width of crossbeam between girders and outside of the exterior girders.

Hinged Diaphragm at Inter. Piers: Partial width of crossbeam between girders. Sloped curtain panel full width of crossbeam outside of exterior girders, fixed to ends of crossbeam.

BP Rail: 3′–6″ overall height for pedestrian traffic. 4′–6″ overall height for bicycle traffic.

Sidewalk: 6-inch height at curb line. Transverse slope of -0.02 feet per foot towards the curb line.

Sidewalk barrier: Inside face is vertical. Outside face slopes 1:12 outward.

The following table provides guidance regarding maximum bridge superstructure length beyond which the use of either intermediate expansion joints or modular expansion joints at the ends is required.

Superstructure Type	Maximum Length (Western WA)		Maximum Length (Eastern WA)	
	Stub Abutment	L-Abutment	Stub Abutment	L-Abutment
Concrete Superstructure				
Prestressed Girders*	450'	900'	450'	900'
PT Spliced Girder **	400'	700' ***	400'	700' ***
CIP-PT Box Girders **	400'	400'	400'	700' ***
Steel Superstructure				
Steel Plate Girder Steel Box Girder	300'	1000'	300'	800'

* Based upon 0.16" creep shortening per 100' of superstructure length, and 0.12" shrinkage shortening per 100' of superstructure length

** Based upon 0.31" creep shortening per 100' of superstructure length, and 0.19" shrinkage shortening per 100' of superstructure length

*** Can be increased to 800' if the joint opening at 64F at time of construction is specified in the expansion joint table to be less than the minimum installation width of 1½". This condition is acceptable if the gland is already installed when steel shapes are installed in the blockout. Otherwise (staged construction for example) the gland would need to be installed at temperatures less than 45ºF.

D. **Examples –** Appendices 2.3-A2-1 and 2.7-A1-1 detail the standard design elements of a standard highway bridge.

The following bridges are good examples of a standard highway bridge. However, they do have some modifications to the standard.

SR 17 Undercrossing 395/110	Contract 3785
Mullenix Road Overcrossing 16/203E&W	Contract 4143

2.7.2 Detailing the Preliminary Plan

The Bridge Preliminary Plan is used and reviewed by the Bridge and Structures Office or consultant who will do the structural design, Region designers and managers, Geotechnical engineers, Hydraulics engineers, Program managers, FHWA engineers and local agency designers and managers. It sometimes is used in public presentation of projects. With such visibility it is important that it's detailing is clear, complete, professional, and attractive. The designer, detailer, and checker shall strive for completeness and consistency in information, layout, line style, and fonts. Appendix B contains examples of Preliminary Plans following time-proven format that may be helpful. See also Chapter 11, Detailing Practice.

Typical sheet layout is as follows:

1. Plan and Elevation views. (This sheet ultimately becomes the Layout sheet of the design plan set)
2. Typical Section including details of stage construction.

   Superelevation diagrams, tables of existing elevations, Notes to Region, and other miscellaneous details as required shall go on Sheet 2, 3, or 4, as many as are required. See also the Preliminary Plan Checklist for details, dimensions, and notes typically required. The completed plan sheets shall be reviewed for consistency by the Preliminary Plans Detailing Specialist.

2.99 References

1. Federal Highway Administration (FHWA) publication Federal Aid Highway Program Manual.

   FHWA Order 5520.1 (dated December 24, 1990) contains the criteria pertaining to Type, Size, and Location studies.

   Volume 6, Chapter 6, Section 2, Subsection 1, Attachment 1 (Transmittal 425) contains the criteria pertaining to railroad undercrossings and overcrossings.

2. Washington Utilities and Transportation Commission *Clearance Rules and Regulations Governing Common Carrier Railroads.*

3. American Railway Engineering and Maintenance Association (AREMA) *Manual for Railroad Engineering*. Note: This manual is used as the basic design and geometric criteria by all railroads. Use these criteria unless superseded by FHWA or WSDOT criteria.

4. WSDOT *Design Manual* M 22-01.

5. WSDOT *Local Agency Guidelines* M 36-63.

6. American Association of State Highway and Transportation Officials *AASHTO LRFD Bridge Design Specification.*

7. The Union Pacific Railroad *"Guidelines for Design of Highway Separation Structures over Railroad (Overhead Grade Separation)"*

Washington State Department of Transportation

Bridge Site Data General

Region	Made By	Date

Bridge Information

SR	Bridge Name	Control Section	Project No.

Highway Section	Section, Township & Range	Datum

Structure width between curbs ?

Will the structure be widened in a contract subsequent to this contract ? ☐ Yes ☐ No ☐ N/A

Which side and amount ?

Will the roadway under the structure be widened in the future? ☐ Yes ☐ No ☐ N/A

Stage construction requirements? ☐ Yes ☐ No ☐ N/A

Should the additional clearance for off-track railroad maintenance equipment be provided?

Can a pier be placed in the median? ☐ Yes ☐ No ☐ N/A

What are the required falsework or construction opening dimensions ?

Are there detour or shoofly bridge requirements? (If Yes, attach drawings) ☐ Yes ☐ No ☐ N/A

Can the R/W be adjusted to accommodate toe of approach fills? ☐ Yes ☐ No ☐ N/A

What is the required vertical clearance?

What is the available depth for superstructure?

Are overlays planned for a contract subsequent to this contract? ☐ Yes ☐ No ☐ N/A

Can profile be revised to provide greater or less clearance? ☐ Yes ☐ No ☐ N/A

If Yes, which line and how much?

Will bridge be constructed before, with or after approach fill? ☐ Before ☐ With ☐ After ☐ N/A

What are expected foundation conditions?

When can foundation drilling be accomplished?

Is slope protection or riprap required for the bridge end slopes? ☐ Yes ☐ No ☐ N/A

Are sidewalks to be provided? ☐ Yes ☐ No ☐ N/A

If Yes, which side and width?

Will sidewalks carry bicycle traffic? ☐ Yes ☐ No ☐ N/A

Will signs or illumination be attached to the structure? ☐ Yes ☐ No ☐ N/A

Will utility conduits be incorporated in the bridge? ☐ Yes ☐ No ☐ N/A

What do the bridge barriers transition to?

Furnish type and location of existing features within the limits of this project, such as retaining walls, sign support structures, utilities, buildings, powerlines, etc.

Any other data relative to selection of type, including your recommendations?

Attachments

- ☐ Vicinity Map
- ☐ Bridge Site Contour Map
- ☐ Specific Roadway sections at bridge site and approved roadway sections
- ☐ Vertical Profile Data
- ☐ Horizontal Curve Data
- ☐ Superelevation Transition Diagrams
- ☐ Tabulated field surveyed and measured stations, offsets, and elevations of existing roadways
- ☐ Photographs and video tape of structure site, adjacent existing structures and surrounding terrain
- ☐
- ☐

DOT Form 235-002 EF
Revised 1/2000

Washington State Department of Transportation

Bridge Site Data Rehabilitation

Region	Made By	Date

Bridge Information

SR	Bridge Name	Control Section	Project No.

Highway Section	Section, Township & Range	Vertical Datum

Existing roadway width, curb to curb _____ Left of ℄ _____ Right of ℄ _____

Proposed roadway width, curb to curb _____ Left of ℄ _____ Right of ℄ _____

Existing wearing surface *(concrete, HMA, HMA w /membrane, MC, epoxy, other)* _____ Thickness _____

Existing drains to be plugged, modified, moved, other? _____

Proposed overlay *(HMA, HMA w /membrame, MC, epoxy)* _____ Thickness _____

Is bridge rail to be modified? ☐ Yes ☐ No

Existing rail type _____

Proposed rail replacement type _____

Will terminal design "F" be required? ☐ Yes ☐ No

Will utilities be placed in the new barrier? ☐ Yes ☐ No

Will the structure be overlayed with or after rail replacement? ☐ With Rail Replacement ☐ After Rail Replacement

Condition of existing expansion joints _____

Existing expansion joints watertight? ☐ Yes ☐ No

	@ curb line	@ ℄ roadway	@ curb line
Measure width of existing expansion joint, normal to skew.	_____ Inch	_____ Inch	_____ Inch

Estimate structure temperature at time of expansion joint measurement _____

Type of existing expansion joint _____

Describe damage, if any, to existing expansion joints _____

Existing Vertical Clearance _____

Proposed Vertical Clearance (at curb lines of traffic barrier) _____

Attachments

☐ Video tape of project

☐ Sketch indicating points at which expansion joint width was measured.

☐ Photographs of existing expansion joints.

☐ Existing deck chloride and delamination data.

☐ Roadway deck elevations at curb lines (10-foot spacing)

DOT Form 235-002A EF
Revised 5/05

Washington State
Department of Transportation

Bridge Site Data
Stream Crossings

Region	Made By	Date

Bridge Information

SR	Bridge Name	Control Section	Project No.

Highway Section	Section, Township & Range	Datum

Name of Stream	Tributary of

Elevation of W.S. *(@ date of survey)* _____ Stream Velocity *(fps @ date of survey)* _____ Depth of Flow *(@ date of survey)* _____

Max Highwater Elevation _____ @ Date _____

Normal Highwater Elevation _____ @ Date _____

Normal Stage Elevation _____ @ Date _____

Extreme Low Water Elevation _____ @ Date _____

Amount and Character of Drift _____

Streambed Material _____

Datum *(i.e., USC and GS, USGS, etc.)* _____

Manning's "N" Value *(Est.)* _____

Attachments

- ☐ Site Contour Map *(See Sect. 7.02.00 Highway Hydraulic Manual)*
- ☐ Highway Alignment and Profile *(refer to map and profiles)*
- ☐ Streambed: Profile and Cross Sections *(500 ft. upstream and downstream)*
- ☐ Photographs
- ☐ Character of Stream Banks *(i.e., rock, silt, etc.)* / Location of Solid Rock
- ☐ Other Data Relative to Selection of Type and Design of Bridge, Including your Recommendations *(i.e., requirements of riprap, permission of piers in channel, etc.)*

DOT Form 235-001 EF
Revised 3/97

Appendix 2.2-A4 Preliminary Plan Checklist

Project _____ SR_____ Prelim. Plan by _____ Check by _____ Date_____

PLAN

___ Survey Lines and Station Ticks
___ Survey Line Intersection Angles
___ Survey Line Intersection Stations
___ Survey Line Bearings
___ Roadway and Median Widths
___ Lane and Shoulder Widths
___ Sidewalk Width
___ Connection/Widening for Guardrail/Barrier
___ Profile Grade and Pivot Point
___ Roadway Superelevation Rate (if constant)
___ Lane Taper and Channelization Data
___ Traffic Arrows
___ Mileage to Junctions along Mainline
___ Back to Back of Pavement Seats
___ Span Lengths
___ Lengths of Walls next to/part of Bridge
___ Pier Skew Angle
___ Bridge Drains, or Inlets off Bridge
___ Existing drainage structures
___ Existing utilities Type, Size, and Location
___ New utilities - Type, Size, and Location
___ Luminaires, Junction Boxes, Conduits
___ Bridge mounted Signs and Supports
___ Contours
___ Top of Cut, Toe of Fill
___ Bottom of Ditches
___ Test Holes (if available)
___ Riprap Limits
___ Stream Flow Arrow
___ R/W Lines and/or Easement Lines
___ Points of Minimum Vertical Clearance
___ Horizontal Clearance
___ Exist. Bridge No. (to be removed, widened)
___ Section, Township, Range
___ City or Town
___ North Arrow
___ SR Number
___ Bearing of Piers, or note if radial

MISCELLANEOUS

___ Structure Type
___ Live Loading
___ Undercrossing Alignment Profiles/Elevs.
___ Superelevation Diagrams
___ Curve Data
___ Riprap Detail
___ Plan Approval Block
___ Notes to Region
___ Names and Signatures
___ Not Included in Bridge Quantities List
___ Inspection and Maintenance Access

ELEVATION

___ Full Length Reference Elevation Line
___ Existing Ground Line x ft. Rt of Survey Line
___ End Slope Rate
___ Slope Protection
___ Pier Stations and Grade Elevations
___ Profile Grade Vertical Curves
___ BP/Pedestrian Rail
___ Barrier/Wall Face Treatment
___ Construction/Falsework Openings
___ Minimum Vertical Clearances
___ Water Surface Elevations and Flow Data
___ Riprap
___ Seal Vent Elevation
___ Datum
___ Grade elevations shown are equal to …
___ For Embankment details at bridge ends...
___ Indicate F, H, or E at abutments and piers

TYPICAL SECTION

___ Bridge Roadway Width
___ Lane and Shoulder Widths
___ Profile Grade and Pivot Point
___ Superelevation Rate
___ Survey Line
___ Overlay Type and Depth
___ Barrier Face Treatment
___ Limits of Pigmented Sealer
___ BP/Pedestrian Rail dimensions
___ Stage Construction, Stage traffic
___ Locations of Temporary Concrete Barrier
___ Closure Pour
___ Structure Depth/Prestressed Girder Type
___ Conduits/Utilities in bridge
___ Substructure Dimensions
___ Bridge Inspection Lighting and Access

LEFT MARGIN

___ Job Number
___ Bridge (before/with/after) Approach Fills
___ Structure Depth/Prestressed Girder Type
___ Deck Protective System
___ Coast Guard Permit Status
(Requirement for all water crossing)
___ Railroad Agreement Status
___ Points of Minimum Vertical Clearance
___ Cast-in-Place Concrete Strength

RIGHT MARGIN

___ Control Section
___ Project Number
___ Region
___ Highway Section
___ SR Number
___ Structure Name

Washington State Department of Transportation

Request for Preliminary Bridge Geotechnical Information

Requested By:	Date:
Geotechnical Information Provided By:	
Project Name:	
Project Location:	
End Pier Stations:	Intermediate Pier Stations:
Permissible Embankment Slope:	Seismic Acceleration Coefficient:
End Pier(s) Recommendation:	
Approximate Dead Load:	Approximate Live Load:
Furnish information on anticipated foundation type, pile or shaft sizes, permanent vs. temporary casing, expected pile or shaft lengths, special excavation, underground water table elevation and the need for seals/cofferdams:	
Provide other Geotechnical information impacting bridge's preliminary cost estimate:	
Interior Pier(s) Recommendation (See information requested for end piers):	
Approximate Dead Load:	Approximate Live Load:
Liquefaction Issues. Indicate potential for liquefaction at the piers, anticipated depth of liquefaction, potential for lateral spread, and the need for soil remediation:	

DOT Form 230-045 EF
5/2010

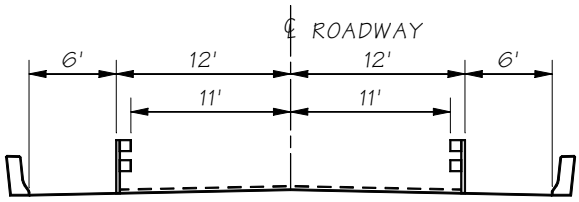

1. NO LANES OPEN: RELATIVE CAST FACTOR (RCF) = 1.0



2. TWO LANES OPEN WITH NEW ALIGNMENT: RFC = 1.0

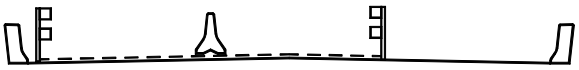

3. ONE LANE OPEN WITH NEW ALIGNMENT AND STAGE CONSTRUCTION: RCF = 1.2



4. ONE LANE OPEN WITH STAGE CONSTRUCTION: RCF = 1.2

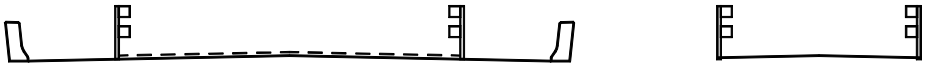

5. ONE LANE OPEN WITH DETOUR: RCF = 1.3

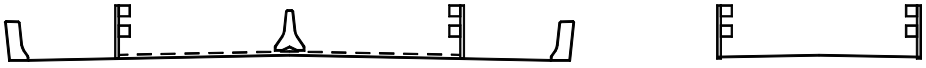

6. TWO LANES OPEN WITH DETOUR AND STAGE CONSTRUCTION: RCF = 1.5



7. TWO LANES OPEN WITH DETOUR: RCF = 1.6

ASSUMPTIONS:
NEW BRIDGE, TWO SPAN PRESTRESSED GIRDER, 200 FEET LONG.
DETOUR BRIDGE, TWO SPAN STEEL GIRDER WITH TIMBER TRESTLES, 200 FEET LONG.
$50/FT² WITH 20% PREMIUM WHEN STAGING CONSTRUCTION.

THIS CHART IS INTENDED TO SHOW SOME OF THE MANY OPTIONS AVAILABLE FOR STAGING BRIDGE CONSTRUCTION. THE ACTUAL COST FACTORS FOR A SPECIFIC PROJECT ARE VERY SENSITIVE TO THE FACTORS OUTLINED IN SECTION 2.2.3. ANY COMPARISON MADE FOR A PROJECT SHOULD BE UNDER THE GUIDANCE OF THE PRELIMINARY DESIGN UNIT OF THE BRIDGE AND STRUCTURES OFFICE.

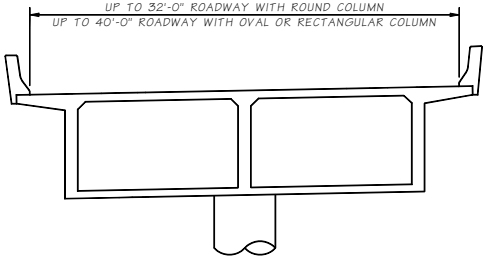

1 COLUMN MINIMUM

PROVIDE COLLISION PROTECTION OR DESIGN FOR COLLISION LOADS.

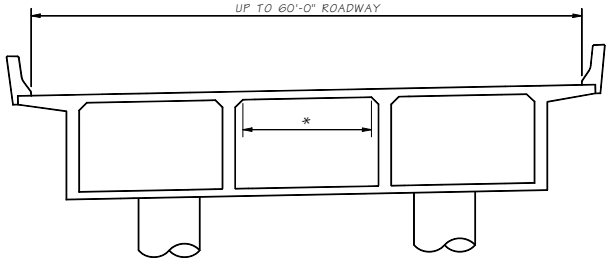

2 COLUMNS MINIMUM

PROVIDE COLLISION PROTECTION OR DESIGN FOR COLLISION LOADS.

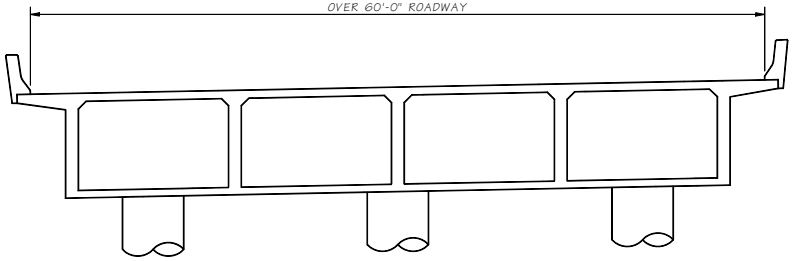

3 COLUMNS MINIMUM

SUBSTRUCTURE DESIGN

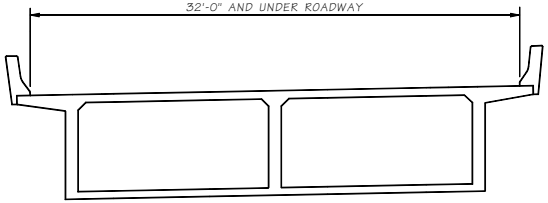

3 WEBS MINIMUM

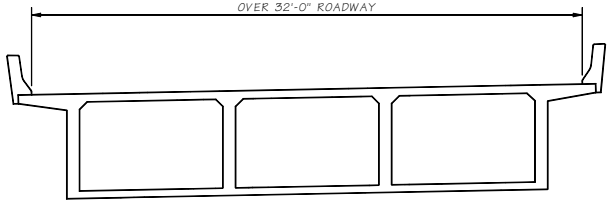

4 WEBS MINIMUM

SUPERSTRUCTURE DESIGN

DESIGN NOTES:

1. USE THE MINIMUM COLUMNS AND WEBS SHOWN TO MEET REDUNDANCY CRITERIA FOR PREVENTING CATASTROPHIC COLLAPSE OF BRIDGES.
2. DRAWINGS ARE SHOWN FOR CONCRETE BOX GIRDERS BRIDGES, BUT THE COLUMN AND WEB REQUIREMENTS ALSO APPLY TO OTHER BRIDGE TYPES.

* 8'-0" MAX. IS PREFFERED FOR EASE OF CONSTRUCTION.

BRIDGE REDUNDANCY CRITERIA

Bridge Design Engr.	M:\BRIDGELIB\BDM\Chapter 2\window files\S23A21.wnd				STATE	FED. AID PROJ. NO.	SHEET NO.	TOTAL SHEETS	BRIDGE AND STRUCTURES OFFICE	Washington State Department of Transportation	BRIDGE SHEET NO.
Supervisor											
Designed By					10	WASH.					SHEET
Checked By											
Detailed By					JOB NUMBER						OF
Bridge Projects Engr.											
Prelim. Plan By											SHEETS
Architect/Specialist	DATE	REVISION	BY	APP'D							

SR ____ JOB NO. ____ SHEET

2.3-A2-1

Fri Sep 03 14:07:07 2010

	STRUCTURE TYPES	SPAN RANGE, FT.	JULY 2006 COST RANGE $ / FT²
HYDAULIC STRUCTURES	PIPE	1 - 3	30 - 60
	CONCRETE CULVERT	3 - 20	100 - 120
	PLATE ARCH	12 - 20	65 - 80
STRUCTURES FOR CONVENTIONAL SITE CONDITIONS	REINF. CONCRETE SLAB	20 - 60	90 - 130
	REINF. CONCRETE TEE BEAM	30 - 60	90 - 140
	REINF. CONCRETE BOX GIRDER	50 - 120	180 - 250
	POST-TENSIONED CONC. BOX GIRDER	140 - 200	200 - 300
	SEGMENTAL P.T. BOX GIRDER	200 - 700	250 - 300
	PRESTRESSED CONC. SLAB	15 - 100	100 - 120
	PRESTRESSED CONC. DECK BULB TEE	40 - 160	100 - 145
	PRESTRESSED CONC. GIRDER	50 - 180	130 - 190
	PRESTRESSED TRAPEZOIDAL TUB GIRDER	40 - 140	160 - 200
	PRESTRESSED CONCRETE SPLICED GIRDER	140 - 230	150 - 200
	STEEL ROLLED GIRDER	20 - 70	140 - 160
	STEEL PLATE GIRDER	60 - 400	150 - 220
	STEEL BOX GIRDER	60 - 400	200 - 275
	STEEL TRUSS	300 - 1200	250 - 375
	TIMBER	10 - 20	120 - 140
	GLULAM TIMBER	14 - 40	120 - 140
STRUCTURES FOR SPECIAL SITE CONDITIONS	CABLE STAY BRIDGE	600 - 1200	500 - 600
	SUSPENSION BRIDGE	600 - 5000	850 - 1200
	FLOATING BRIDGE	600 +	800 - 1000
	ARCH BRIDGE	30 - 400	400 - 450
	MOVEABLE SPAN BRIDGE	200 - 350	1500 - 2000
	TUNNEL	30 +	1500 - 3000

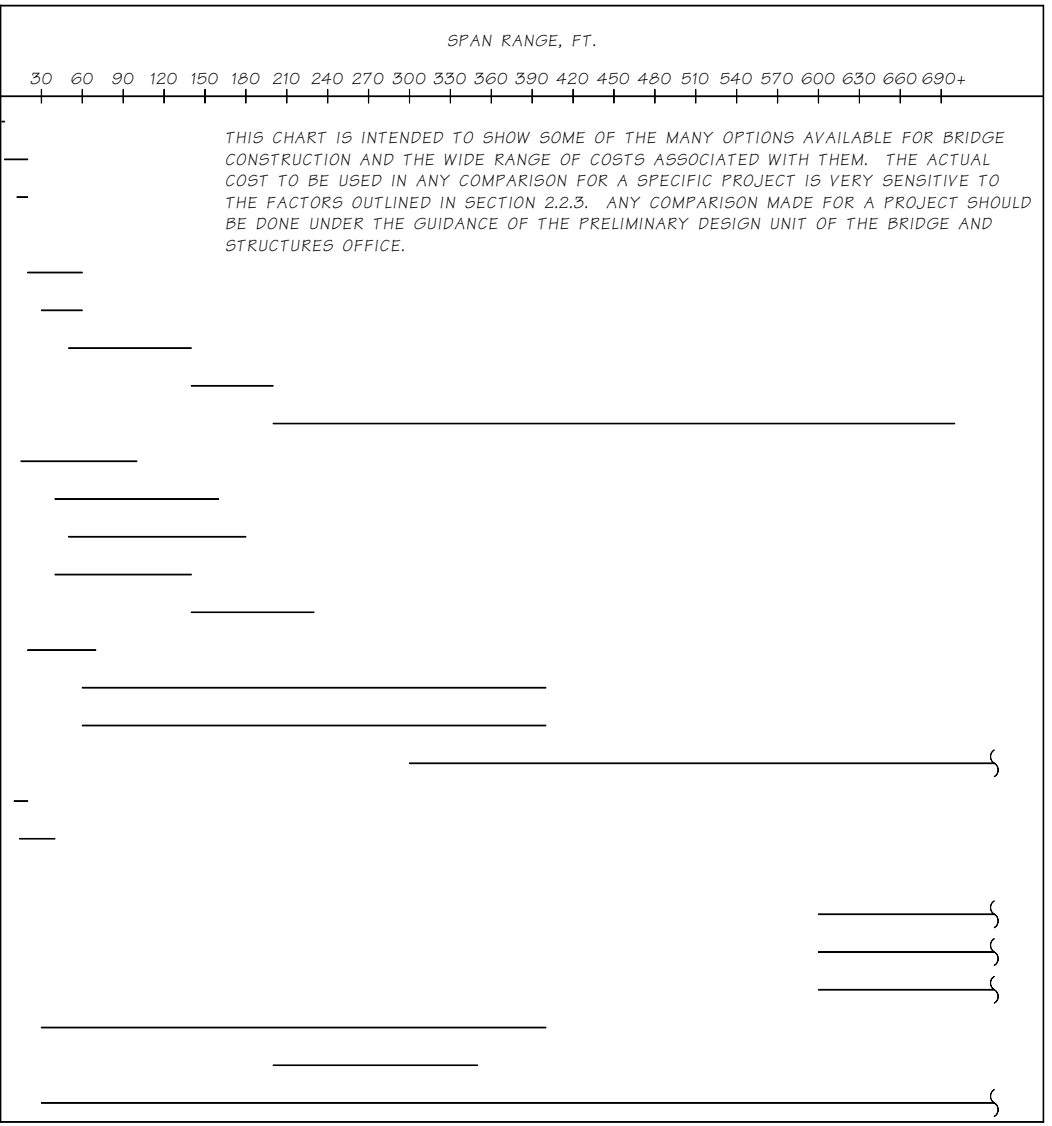

THIS CHART IS INTENDED TO SHOW SOME OF THE MANY OPTIONS AVAILABLE FOR BRIDGE CONSTRUCTION AND THE WIDE RANGE OF COSTS ASSOCIATED WITH THEM. THE ACTUAL COST TO BE USED IN ANY COMPARISON FOR A SPECIFIC PROJECT IS VERY SENSITIVE TO THE FACTORS OUTLINED IN SECTION 2.2.3. ANY COMPARISON MADE FOR A PROJECT SHOULD BE DONE UNDER THE GUIDANCE OF THE PRELIMINARY DESIGN UNIT OF THE BRIDGE AND STRUCTURES OFFICE.

Bridge Design Engr.					STATE	FED. AID PROJ. NO.	SHEET NO.	TOTAL SHEETS	BRIDGE AND STRUCTURES OFFICE
Supervisor					10 WASH.				Washington State Department of Transportation
Designed By									
Checked By					JOB NUMBER				
Detailed By									
Bridge Projects Engr.									
Prelim. Plan By									
Architect/Specialist	DATE	REVISION	BY	APPD					

M:\BRIDGE\BDM\Chapter 2\window files\524A12.wnd

SR JOB NO. SHEET

Fri Sep 03 14:07:08 2010

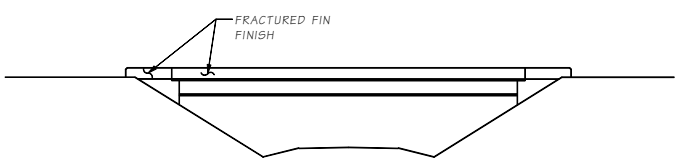

ELEVATION
SINGLE SPAN BRIDGE

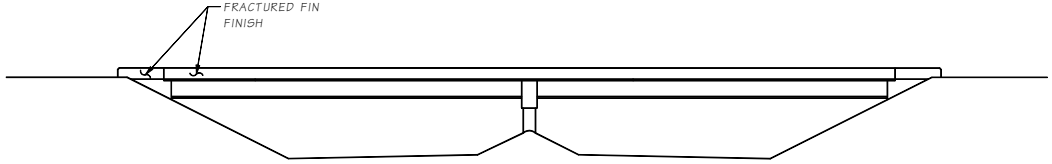

ELEVATION
TWO SPAN BRIDGE

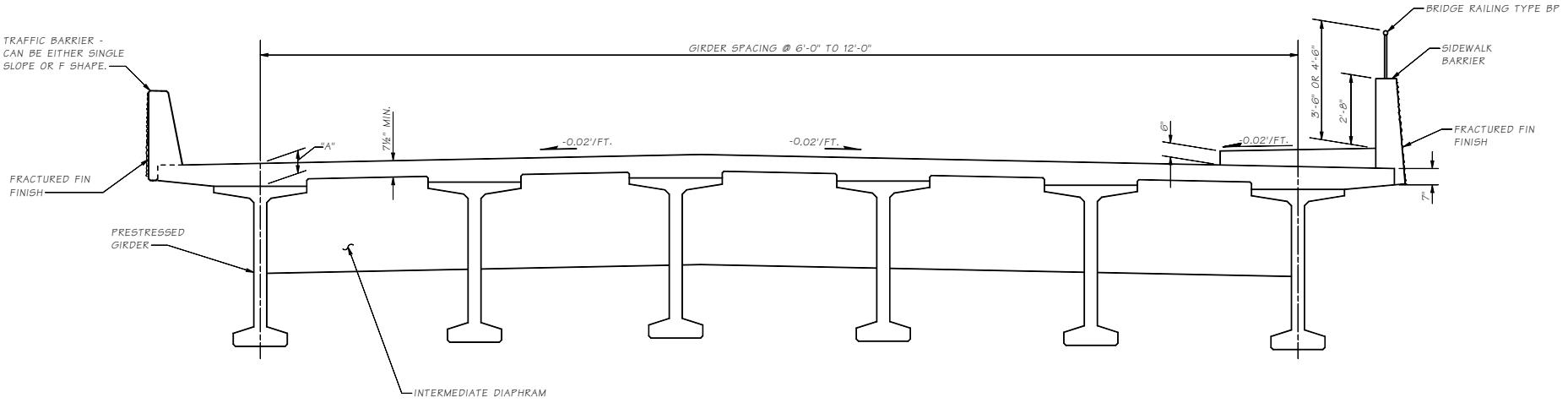

STANDARD SUPERSTRUCTURE ELEMENTS

Bridge Design Engr.	M:\BRIDGELIB\BDM\Chapter 2\window files\S27A11.wnd				STATE	FED. AID PROJ. NO.	SHEET NO.	TOTAL SHEETS	BRIDGE AND STRUCTURES OFFICE
Supervisor									Washington State Department of Transportation
Designed By					10 WASH.				
Checked By									
Detailed By					JOB NUMBER				
Bridge Projects Engr.									
Prelim. Plan By									
Architect/Specialist	DATE	REVISION	BY	APP'D					

SR. ___ JOB NO. ___ SHEET

BRIDGE SHEET NO. ___ SHEET ___ OF ___ SHEETS

Fri Sep 03 14:07:10 2010

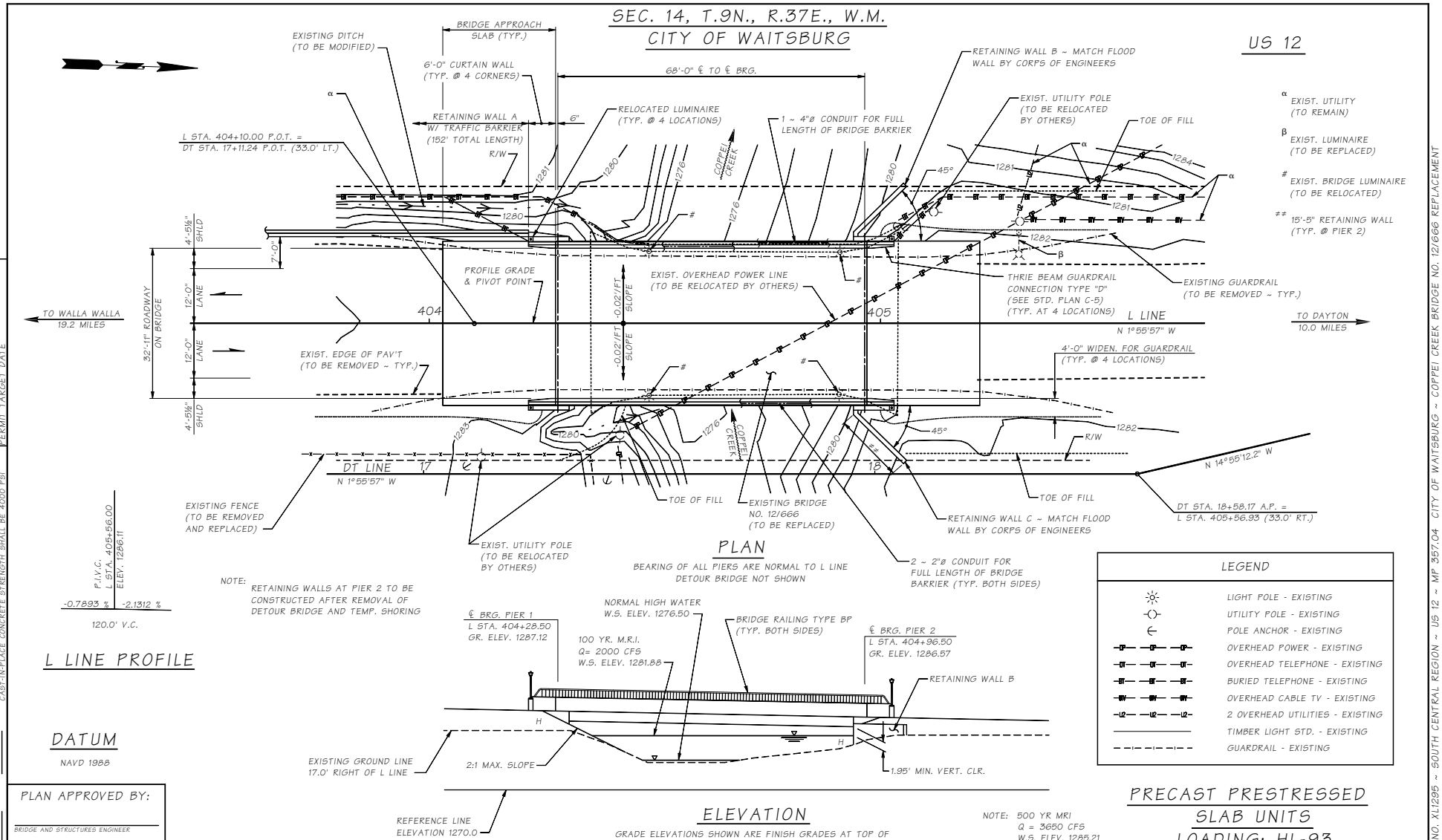
SEC. 14, T.9N., R.37E., W.M.
CITY OF WAITSBURG
US 12
BRIDGE APPROACH SLAB (TYP.)
EXISTING DITCH (TO BE MODIFIED)
6'-0" CURTAIN WALL (TYP. @ 4 CORNERS)
68'-0" ℄ TO ℄ BRG.
RETAINING WALL A W/ TRAFFIC BARRIER (152' TOTAL LENGTH)
6"
RELOCATED LUMINAIRE (TYP. @ 4 LOCATIONS)
1 ~ 4"ø CONDUIT FOR FULL LENGTH OF BRIDGE BARRIER
RETAINING WALL B ~ MATCH FLOOD WALL BY CORPS OF ENGINEERS
EXIST. UTILITY POLE (TO BE RELOCATED BY OTHERS)
TOE OF FILL
α EXIST. UTILITY (TO REMAIN)
β EXIST. LUMINAIRE (TO BE REPLACED)
EXIST. BRIDGE LUMINAIRE (TO BE RELOCATED)
15'-5" RETAINING WALL (TYP. @ PIER 2)
L STA. 404+10.00 P.O.T. = DT STA. 17+11.24 P.O.T. (33.0' LT.)
R/W
COPPEI CREEK
4'-5⅛" SHLD
7'-0"
12'-0" LANE
12'-0" LANE
4'-5⅛" SHLD
32'-11" ROADWAY ON BRIDGE
PROFILE GRADE & PIVOT POINT
EXIST. OVERHEAD POWER LINE (TO BE RELOCATED BY OTHERS)
-0.02'/FT SLOPE
-0.02'/FT SLOPE
THRIE BEAM GUARDRAIL CONNECTION TYPE "D" (SEE STD. PLAN C-5) (TYP. AT 4 LOCATIONS)
EXISTING GUARDRAIL (TO BE REMOVED ~ TYP.)
TO WALLA WALLA 19.2 MILES
404
405
L LINE
N 1°55'57" W
TO DAYTON 10.0 MILES
EXIST. EDGE OF PAV'T (TO BE REMOVED ~ TYP.)
4'-0" WIDEN. FOR GUARDRAIL (TYP. @ 4 LOCATIONS)
45°
DT LINE
N 1°55'57" W
17
18
N 14°55'12.2" W
EXISTING FENCE (TO BE REMOVED AND REPLACED)
TOE OF FILL
EXISTING BRIDGE NO. 12/666 (TO BE REPLACED)
TOE OF FILL
RETAINING WALL C ~ MATCH FLOOD WALL BY CORPS OF ENGINEERS
DT STA. 18+58.17 A.P. = L STA. 405+56.93 (33.0' RT.)
EXIST. UTILITY POLE (TO BE RELOCATED BY OTHERS)
2 ~ 2"ø CONDUIT FOR FULL LENGTH OF BRIDGE BARRIER (TYP. BOTH SIDES)
PLAN
BEARING OF ALL PIERS ARE NORMAL TO L LINE
DETOUR BRIDGE NOT SHOWN
NOTE: RETAINING WALLS AT PIER 2 TO BE CONSTRUCTED AFTER REMOVAL OF DETOUR BRIDGE AND TEMP. SHORING
P.I.V.C. L STA. 405+56.00 ELEV. 1286.11
-0.7893 % -2.1312 %
120.0' V.C.
L LINE PROFILE
LEGEND
LIGHT POLE - EXISTING
UTILITY POLE - EXISTING
POLE ANCHOR - EXISTING
OVERHEAD POWER - EXISTING
OVERHEAD TELEPHONE - EXISTING
BURIED TELEPHONE - EXISTING
OVERHEAD CABLE TV - EXISTING
2 OVERHEAD UTILITIES - EXISTING
TIMBER LIGHT STD. - EXISTING
GUARDRAIL - EXISTING
℄ BRG. PIER 1 L STA. 404+28.50 GR. ELEV. 1287.12
NORMAL HIGH WATER W.S. ELEV. 1276.50
100 YR. M.R.I. Q= 2000 CFS W.S. ELEV. 1281.88
BRIDGE RAILING TYPE BP (TYP. BOTH SIDES)
℄ BRG. PIER 2 L STA. 404+96.50 GR. ELEV. 1286.57
RETAINING WALL B
H
EXISTING GROUND LINE 17.0' RIGHT OF L LINE
2:1 MAX. SLOPE
1.95' MIN. VERT. CLR.
REFERENCE LINE ELEVATION 1270.0
ELEVATION
GRADE ELEVATIONS SHOWN ARE FINISH GRADES AT TOP OF 3" ACP OVERLAY ON L LINE AND ARE EQUAL TO PROFILE GRADE.
NOTE: 500 YR MRI Q = 3650 CFS W.S. ELEV. 1285.21
DATUM
NAVD 1988
PRECAST PRESTRESSED SLAB UNITS LOADING: HL-93
PLAN APPROVED BY:
BRIDGE AND STRUCTURES ENGINEER
PROJECT DEVELOPMENT ENGINEER
PT. OF MIN. VERT. CLR: L STA. 404+95.00 (18.0' RT)
COAST GUARD LIAISON
COAST GUARD PERMIT NOT REQ'D
PERMIT TARGET DATE
BRIDGE WITH APPROACH FILLS
PRECAST PRETRESSED SLAB (26" DEEP)
DECK PROTECTIVE SYSTEM 3 (EPOXY COATED REBARS)
CAST-IN-PLACE CONCRETE STRENGTH SHALL BE 4000 PSI
C.S. 3601 ~ PROJ. NO. XL1295 ~ SOUTH CENTRAL REGION ~ US 12 ~ MP 357.04 CITY OF WAITSBURG ~ COPPEI CREEK BRIDGE NO. 12/666 REPLACEMENT
SHEET
JOB NO.
SR
2-B-1
Bridge Design Engr.
Supervisor
Designed By
Checked By
Detailed By
Bridge Projects Engr.
Prelim. Plan By
Architect/Specialist
M:\BRIDGELIB\BDM\Chapter 2\window files\S2B1.wnd
DATE REVISION BY APP'D
STATE 10 WASH.
JOB NUMBER
FED. AID PROJ. NO.
SHEET NO. TOTAL SHEETS
BRIDGE AND STRUCTURES OFFICE
Washington State Department of Transportation
BRIDGE SHEET NO.
SHEET OF SHEETS
Fri Sep 03 14:07:12 2010

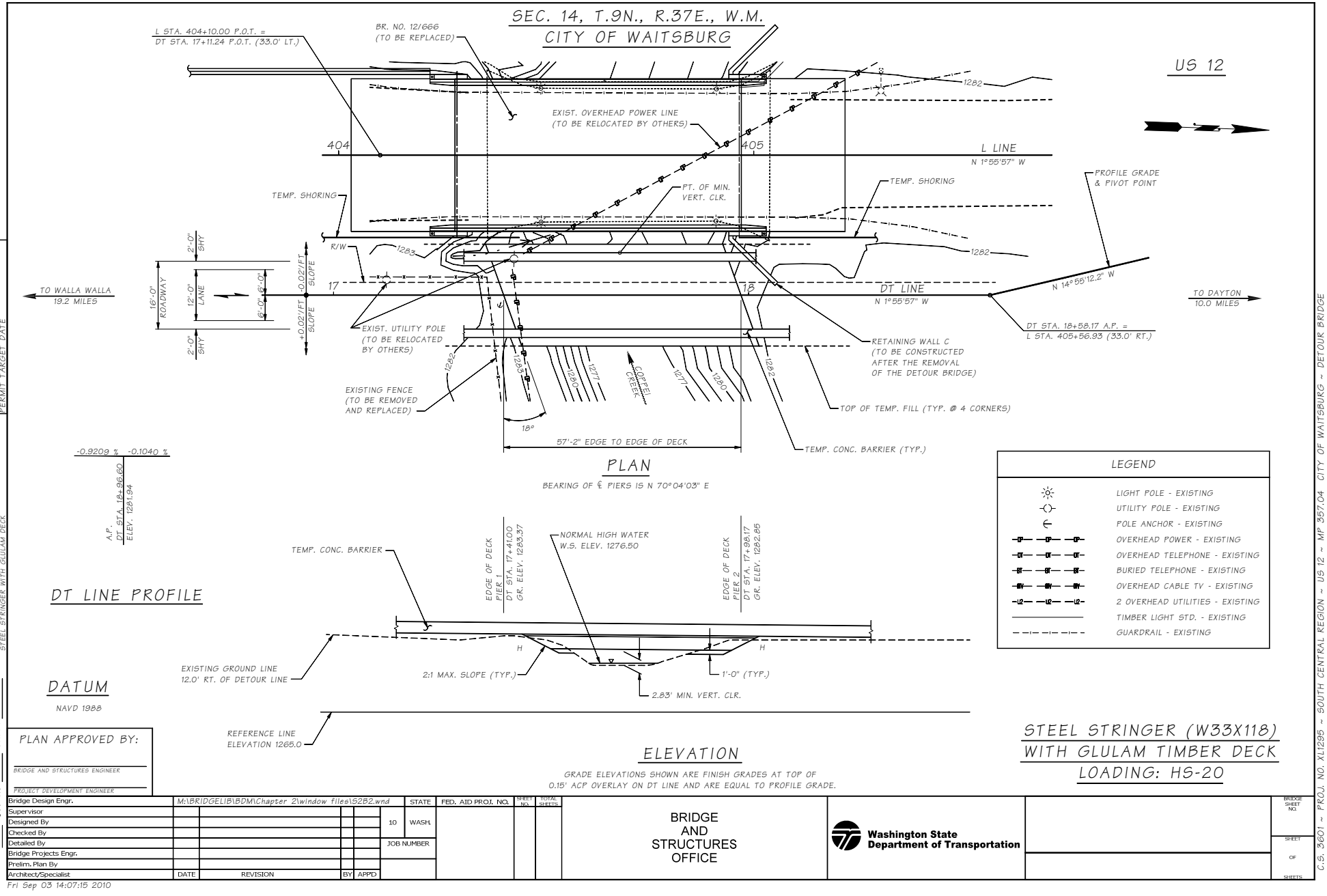

PT. OF MIN. VERT. CLR.: DT STA. 8+19.0 (9.5' LT)

COAST GUARD LIAISON
COAST GUARD PERMIT NOT REQ'D
PERMIT TARGET DATE

BRIDGE WITH APPROACH FILLS
DETOUR BRIDGE W 33X118 GIRDERS
STEEL STRINGER WITH GLULAM DECK

PLAN APPROVED BY:

BRIDGE AND STRUCTURES ENGINEER

PROJECT DEVELOPMENT ENGINEER

Bridge Design Engr.	M:\BRIDGELIB\BDM\Chapter 2\window files\S2B2.wnd			STATE	FED. AID PROJ. NO.	SHEET NO.	TOTAL SHEETS	BRIDGE AND STRUCTURES OFFICE	Washington State Department of Transportation	BRIDGE SHEET NO.
Supervisor				10 WASH.						
Designed By										SHEET
Checked By				JOB NUMBER						OF
Detailed By										SHEETS
Bridge Projects Engr.										
Prelim. Plan By										
Architect/Specialist	DATE	REVISION	BY	APP'D						

Fri Sep 03 14:07:15 2010

JOB NO. SHEET
SR 2-B-2

C.S. 3601 ~ PROJ. NO. X.1295 ~ SOUTH CENTRAL REGION ~ US 12 ~ MP 357.04 CITY OF WAITSBURG ~ DETOUR BRIDGE

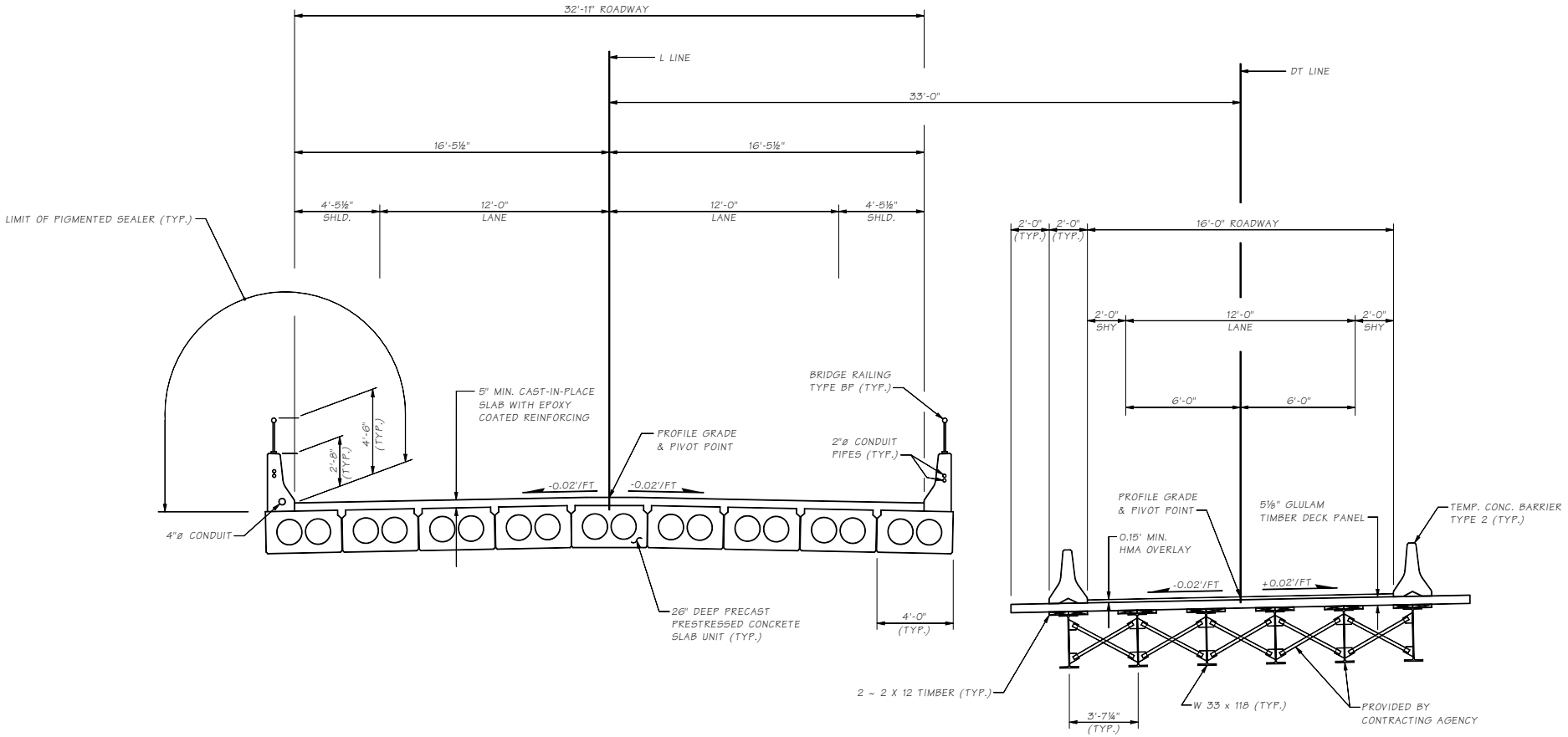

TYPICAL SECTION
BRIDGE NO. 12/666 & DETOUR BRIDGE

SHOWN NEAR MID SPAN

Bridge Design Engr.	M:\BRIDGELIB\BDM\Chapter 2\window files\S22B11.wnd				STATE	FED. AID PROJ. NO.	SHEET NO.	TOTAL SHEETS	BRIDGE AND STRUCTURES OFFICE	Washington State Department of Transportation	BRIDGE SHEET NO.
Supervisor											
Designed By				10	WASH.						SHEET
Checked By											
Detailed By				JOB NUMBER							OF
Bridge Projects Engr.											
Prelim. Plan By											SHEETS
Architect/Specialist	DATE	REVISION	BY	APPD							

Fri Sep 03 14:07:05 2010

SR ___ JOB NO. ___ SHEET ___

2-B-3

C.S. 3601 ~ PROJ. NO. XL1295 ~ SOUTH CENTRAL REGION ~ US 12 ~ MP 357.04 CITY OF WAITSBURG ~ COPPEI CREEK BRIDGE NO. 12/666 REPLACEMENT

CURVE DATA					
P.I. STATION	Δ	RADIUS	TANGENT	LENGTH	BK. TANGENT BRG.
L 347+80.00	37°42'00" LT.	4590.00'	1567.03'	3020.17'	N 21°44'52" E

PT. OF MIN. VERT. CLR.
NE 129TH STA. 9+91.32 (23.0' LT.) =
L STA. 360+57.63 (2.51 LT.)
NE 129TH STA. 10+84.27 (23.0' LT.) =
L STA. 360+34.10 (87.4" RT.)

NOTE:
EXIST. STORM DRAIN PIPE, MANHOLES AND CATCH BASINS, TO BE ABANDONED UNLESS OTHERWISE NOTED.

134TH A LINE
N 17°22'05" W
134TH A STA. 10+00 = L-LINE STA. 362+76.18 (55.5' LT.)
TO VANCOUVER 6 MILES
TO OLYMPIA 98 MILES
134TH B LINE
N 13°39'40" W
134TH B STA. 10+00 = L-LINE STA. 364+82.76 (82' RT.)

SEC. 26, T.3N., R.1E., W.M.
CLARK COUNTY
SR 5

175'-3" BK. TO BK. OF PAV'T SEATS
80'-0"
95'-3"
NE 129TH STA. 11+59.73 = McD STA. 10+00
NE 129TH STA. 11+97.96 = TRP STA. 10+00
McD LINE
N 04°51'18" W
TRP LINE
S 01° 37' 24" W
L-LINE
EXISTING OVERHEAD POWER LINE (TO REMAIN)
EXISTING FENCE (TO BE REMOVED)
CATCH BASIN TYPE 1 SEE STD. PLAN B-1 (TYP. 4 LOCATIONS)
RETAINING WALL #12
PROFILE GRADE & PIVOT POINT
R/W
2'-0" WIDENING FOR GUARDRAIL
NE 129TH STA. 8+35.19 = NE 18TH STA. 10+00
NE 18TH LINE
S 2°34'43" E
NE 18TH STA. 10+42.54 P.C.
14° 39' 03" SKEW (TYP.)
S 88°48'18" E
NE 129TH LINE
0.02 SLOPE
TOP OF FILL
PT. OF MIN. VERT. CLR.
EXIST. BR. NO. 5/23 (TO BE REMOVED)
EXISTING CURB (TO BE REMOVED)
RETAINING WALL #13
RET. WALL #14
EXISTING GUARDRAIL (TO BE REMOVED ~ TYP.)
EXISTING FENCE (TO BE REMOVED)
TOP OF CUT
75°20'57"
GORE VAR.
EXISTING PILE CAP (TO BE REMOVED)
PROFILE GRADE & PIVOT POINT
TOP OF CUT
36'-3" RETAINING WALL #10
NE 129TH STA. 10+00.00 (P.O.T.) = L STA. 360+33.14 (P.O.C.)
TYPE 1 GUARDRAIL TRANSITION WITH D CONNECTION
JUNCTION BOX (TYP. 2 LOCATIONS)
8'-0" CURTAIN WALL (TYP. 4 LOCATIONS)
TOP OF CUT
T.H. NO. 6
T.H. NO. 5
H-6-97
H-8-97
-1:100
6'-6" SDWK.
8'-0" SHLD.
12'-0" LANE
40'-0" ROADWAY
10'-0" SHLD.
12'-0" LANE
13'-0" LANE
8'-0" SHLD.
8' SH.
15' LANE
12' LANE
13' LANE
8' SH.

PLAN
BEARING OF ALL PIERS N 13°27'21" W

#2 ~ 2"ø CONDUITS IN BARRIER FOR FULL LENGTH OF BRIDGE, CURTAIN WALLS AND RETAINING WALLS (TYP.)
α EXIST. STORM SEWER LINE (TO BE REMOVED)
αα EXIST. STORM SEWER LINE (TO REMAIN)
β EXIST. WATER LINE (TO BE REMOVED)
* EXIST. GAS LINE (TO BE REMOVED)
+ 8"ø GAS LINE
Ø EXIST. TELEPHONE LINE (TO BE REMOVED)
++ 12"ø DUCTILE CAST IRON WATER PIPE
# EXIST. SANITARY SEWER LINE TO BE RELOCATED
EXIST. PILE CAP (TO REMAIN)
*** EXISTING FENCE (TO BE REMOVED)
ØØØØ 4 ~ 4"ø TELEPHONE CONDUITS
BRIDGE-MOUNTED LIGHTED SIGN (16' H X 10' V)
BRIDGE-MOUNTED LIGHTED SIGN (20' H X 10' V)

BRIDGE WITH APPROACH FILLS
4'-3" DEEP CONCRETE BOX GIRDER SUPERSTRUCTURE
DECK PROTECTIVE SYSTEM 1 (EPOXY COATED REBARS)
CAST-IN-PLACE CONCRETE SHALL BE CLASS 4000

P.I.V.C. (@134TH STA. 10+50 ELEV. 213.70
+0.5357 %
-5.8696 %
360' V.C.

NE 129TH LINE PROFILE

BK. OF PAV'T SEAT PIER 1
NE 129TH STA. 9+20.00
GR. ELEV. 212.78
℄ PIER 2
NE 129TH STA. 10+00
GR. ELEV. 211.93
BK. OF PAV'T SEAT PIER 3
NE 129TH STA. 10+95.25
GR. ELEV. 209.43
PIGMENTED SEALER
FRACTURED FIN FINISH W/PIGMENTED SEALER (TYP.)
BRIDGE RAILING TYPE CHAIN LINK FENCE
EXISTING GROUND LINE 26.50' RT. OF NE 29TH LINE
1:2 MAX. SLOPE (TYP.)
CONC. BARRIER TYPE 4 W/TRANSITION SECTION (SEE STD. PLAN C-8a)
CONC. BARRIER TYPE 4
22.18' MIN. VERT. CLR.
L LINE
16.97' MIN. VERT. CLR.
CONC. BARRIER TYPE 4
REFERENCE LINE ELEVATION 170.00

ELEVATION
GRADE ELEVATIONS SHOWN ARE FINISH GRADES AT TOP OF ROADWAY SLAB ON NE 129TH LINE AND ARE EQUAL TO PROFILE GRADE.
SEE STD. PLAN H-9 FOR EMBANKMENT DETAILS AT SOUTHWEST END OF BRIDGE.

DATUM
N.A.V.D. OF 1988

PLAN APPROVED BY:
J. A. Weigel 04/01
BRIDGE AND STRUCTURES ENGINEER
Mike Clark 01/01
PROJECT DEVELOPMENT ENGINEER

PRECAST POST-TENSIONED CONCRETE BOX GIRDER LOADING: HL-93

C.S. 0602 ~ PROJ. NO. 0L2687C ~ SOUTHWEST REGION ~ SALMON CREEK TO SR 205 ~ SR 5 ~ NE 129TH ST. BR. NO. 5/23 REPLACEMENT

Bridge Design Engr.	M:\BRIDGELIB\BDM\Chapter 2\window files\S2B4.wnd			STATE	FED. AID PROJ. NO.	SHEET NO.	TOTAL SHEETS	BRIDGE AND STRUCTURES OFFICE	Washington State Department of Transportation	BRIDGE SHEET NO. 1
Supervisor				10 WASH.						
Designed By										SHEET
Checked By				JOB NUMBER						OF
Detailed By										SHEETS
Bridge Projects Engr.									PRELIMINARY PLAN	
Prelim. Plan By										
Architect/Specialist	DATE	REVISION	BY	APPD						

Fri Sep 03 14:07:19 2010

SR 2-B-4 JOB NO. SHEET

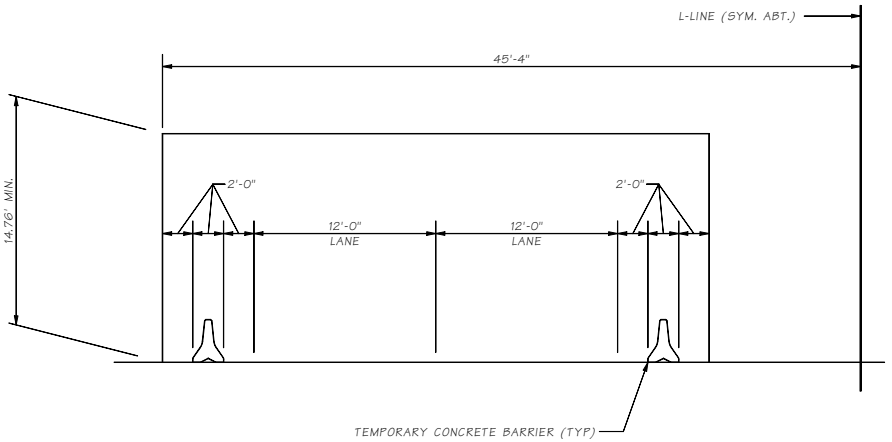

FALSEWORK OPENING

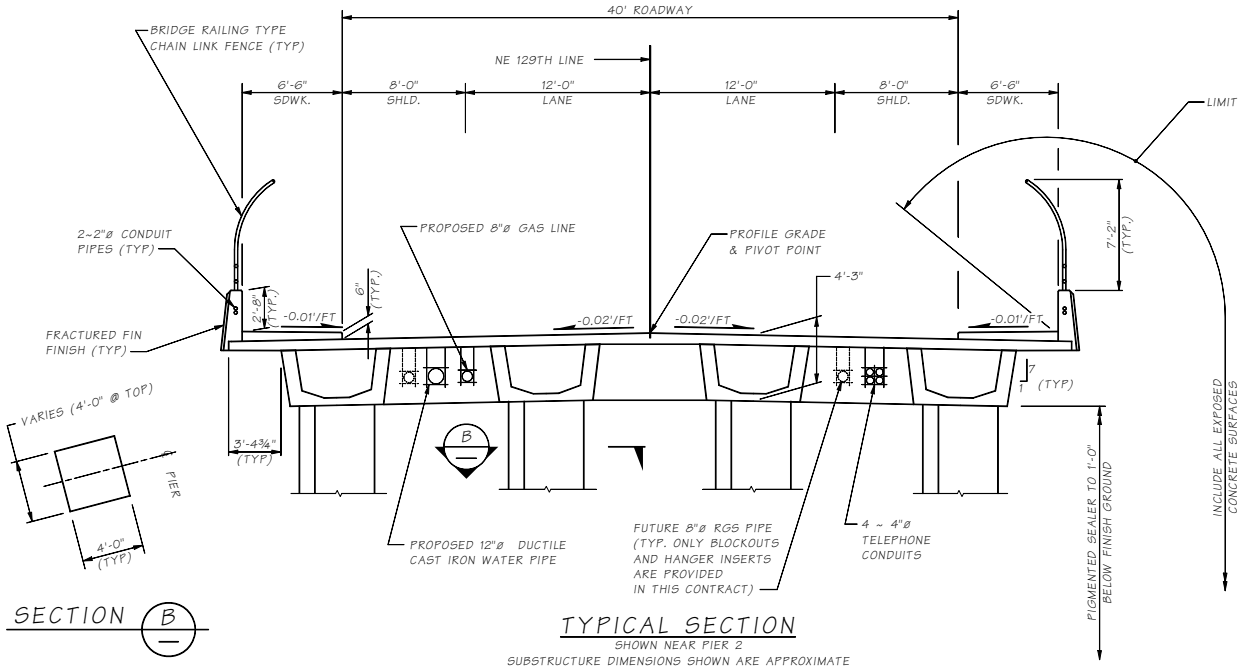

SECTION B

TYPICAL SECTION
SHOWN NEAR PIER 2
SUBSTRUCTURE DIMENSIONS SHOWN ARE APPROXIMATE

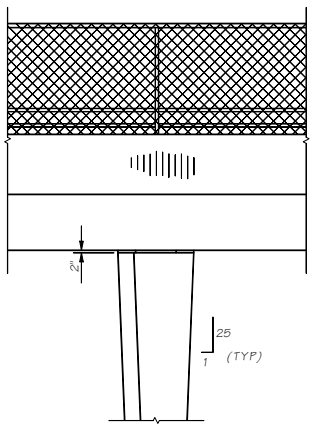

VIEW A

Bridge Design Engr.	M:\BRIDGELIB\BDM\Chapter 2\window files\S2B5.wnd				STATE	FED. AID PROJ. NO.	SHEET NO.	TOTAL SHEETS	BRIDGE AND STRUCTURES OFFICE
Supervisor									
Designed By					10 WASH.				
Checked By									
Detailed By					JOB NUMBER				
Bridge Projects Engr.									
Prelim. Plan By									
Architect/Specialist	DATE	REVISION	BY	APP'D					

Washington State Department of Transportation

PRELIMINARY PLAN

BRIDGE SHEET NO. | SHEET | OF | SHEETS

Fri Sep 03 14:07:24 2010

SR 2-B-5 JOB NO. SHEET

C.S. 0602 ~ PROJ. NO. 0L2687C ~ SOUTHWEST REGION ~ SALMON CREEK TO SR 205 ~ SR 5 ~ NE 129TH ST. BR. NO. 5/23 REPLACEMENT

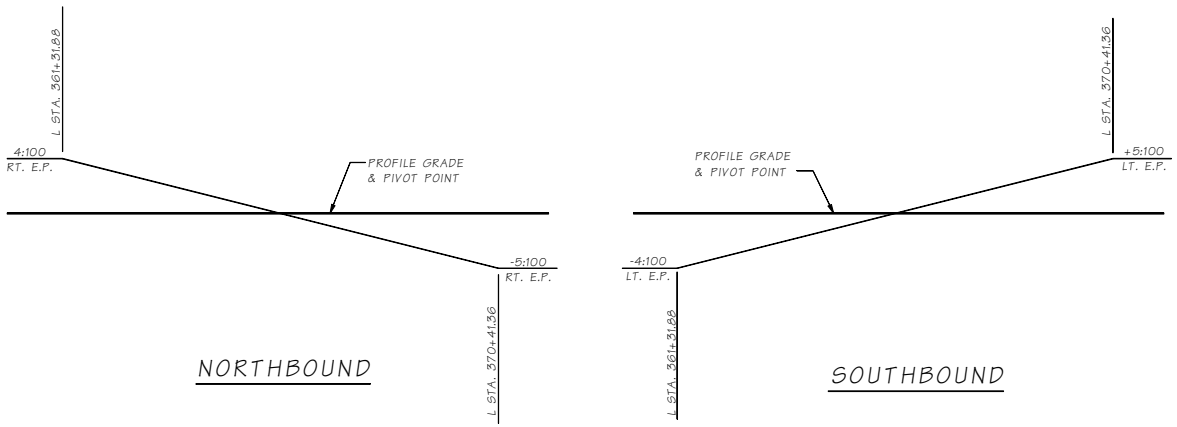

L-LINE
SUPERELEVATION DIAGRAM

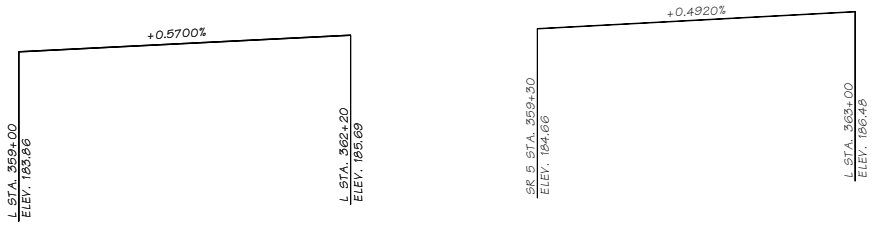

Bridge Design Engr.	M:\BRIDGELIB\BDM\Chapter 2\window files\S2B6.wnd				STATE	FED. AID PROJ. NO.	SHEET NO.	TOTAL SHEETS	BRIDGE AND STRUCTURES OFFICE
Supervisor									Washington State Department of Transportation
Designed By				10	WASH.				
Checked By									
Detailed By				JOB NUMBER					PRELIMINARY PLAN
Bridge Projects Engr.									
Prelim. Plan By									
Architect/Specialist	DATE	REVISION	BY	APPD					

BRIDGE SHEET NO. 3 SHEET OF SHEETS

Fri Sep 03 14:07:25 2010

SR 5 JOB NO. 7202 SHEET 3 OF 3

2-B-6

C.S. 0602 ~ PROJ. NO. 0L2687 ~ SOUTHWEST REGION ~ SALMON CREEK TO SR 205 ~ SR 5 ~ NE 129TH ST. BR. NO. 5/23 REPLACEMENT

CURVE DATA					
P.I. STATION	Δ	RADIUS	TANGENT	LENGTH	BK. TANGENT BRG.
T1 10+51.02	29°00'00" LT.	800.00'	206.90'	404.92'	N 20°33'04" E
BP2 146+85.44	101°23'40" LT.	125.00'	152.71'	221.21'	S 66°09'27" E
BP2 147+99.54	07°43'32" LT.	200.00'	13.50'	26.97'	N 12°26'53" E
BP2 148+39.16	01°13'18" LT.	550.00'	5.86'	11.73'	N 04°43'22" E

SEC. 12, T.20N., R.2E., W.M.
CITY OF TACOMA

SR 16

- FOG LINE
β - CURB LINE
5'-0" GRASS STRIP
* CONNECTION TO CONC. SINGLE SLOPE BARRIER (TYP.)
** EXISTING DRAINAGE (TO BE REMOVED)
LANE VARIES (13'-16')
A22 STA. 80+39.89 P.O.T. = T1 STA. 10+19.45 P.O.C.
EXIST. PED PATH (TO REMAIN)
T1 LINE
TYLER STREET
PT. OF MIN. VERT. CLR.
EXIST. CANT. SIGN STRUCTURE (TO BE REMOVED)
TOE OF FILL
2 ~ 2"ø CONDUIT FOR FULL LENGTH OF BRIDGE BARRIER (TYP.)
LUMINAIRE (TYP.)
20'-0" WINGWALL (TYP.)
EXIST. EB BRIDGE NO. 16/20W (TO BE WIDENED)
EB PROFILE GRADE & PIVOT POINT
APPROX. 12'-0" WIDENING
10'-0" SHLD. ON BRIDGE
68'-0" ROADWAY ON BRIDGE
EXISTING GRATE INLET (TO REMAIN)
EXIST. CURB LINE
-0.02'/FT SLOPE
NEW CURB LINE
APPROX. 16'-0" WIDENING
GRATE INLET
A22 LINE
N 89°23'45" W
-0.01'/FT SLOPE
24'-0"
2'-0" ON BRIDGE
A22 STA. 80+86.34 P.O.T. = BP2 STA. 148+19.83 P.O.T.
TO SR 163 JCT. 2.0 MILES
SINGLE SLOPE MEDIAN BARRIER
BARRIER TRANSITION (TYP.)
EXIST. BRIDGE APPROACH SLAB (TO BE REMOVED)
BRIDGE APPROACH SLAB (TYP.)
EXIST. WB BR. NO. 16/20E
EXISTING LUMINAIRE (TO BE REMOVED ~ TYP.)
TO I-5 JCT. 1.6 MILES
MEASURED ALONG PROFILE GRADE LINE
138'-0⅜" 118'-0⅜" 117'-10⅝" 137'-10¼"
511'-9⅝" BK. TO BK. OF PAV'T SEATS

FIELD MEASURED BEARINGS

PIER	BEARING
1	N 13°05'04" W
2	N 13°12'10" W
3	N 01°46'13" W
4	N 10°18'06" E
5	N 10°23'00" E

PLAN ~ EB BRIDGE (16/20W) WIDENING

BK. OF PAV'T. SEAT PIER 1 A22 STA. 76+06.29 GR. ELEV. 344.39
100 YR. M.R.I. W.S. ELEV. XXX.X
NORMAL HIGH WATER W.S. ELEV. XXX.X
℄ PIER 2 A22 STA. 77+44.32 GR. ELEV. 345.15
℄ PIER 3 A22 STA. 78+62.35 GR. ELEV. 345.71
℄ PIER 4 A22 STA. 79+80.24 GR. ELEV. 346.14
LUMINAIRE (TYP.)
BK OF PAV'T SEAT PIER 5 A22 STA. 81+18.09 GR. ELEV. 346.16
68' X 16.5' MIN. CONST. OPENING
22.3' MIN. VERT. CLR.
10.9' MIN. VERT. CLR.
MATCH EXISTING SLOPE 2:1 MAX. SLOPE
EXIST. GROUND LINE 1' LT. OF A22 LINE
C.I.P. CONC. SLOPE PROTECTION
T1 LINE
BP2 LINE

V.P.I. A22 STA. 77+59.24 ELEV. 345.32
+0.6116 % +0.3923 %
331.50' V.C.
V.P.I. A22 STA. 82+00.00 ELEV. 347.05
+0.3923 % -1.2804 %
550.00' V.C.

EB PROFILE GRADE

V.P.I. BP2 STA. 149+24.90 ELEV. 326.30
-0.4446 % -1.9989 %
60.00' V.C.

BP2 LINE PROFILE

REFERENCE LINE ELEVATION 290.0
NOTE: 500 YR MRI W.S. ELEV. XXX.X

ELEVATION ~ EB BRIDGE (16/20W) WIDENING

SEE STD. PLAN A-50.20-01 FOR EMBANKMENT WIDENING AT BRIDGE ENDS. GRADE ELEVATIONS SHOWN ARE FINISH GRADES 24'-0" LT. OF A22 LINE AND ARE EQUAL TO THE PROFILE GRADE.

P.C. GIRDERS (W74G) WIDENING CONTINUOUS FOR LIVE LOAD

LOADING : HS-25 OR TWO 24 K AXLES @ 4' CTR'S

PLAN APPROVED BY:
BRIDGE AND STRUCTURES ENGINEER
PROJECT DEVELOPMENT ENGINEER

DATUM
NAVD 1988

Bridge Design Engr.	M:\BRIDGELIB\BDM\Chapter 2\window files\S2B7.wnd	STATE	FED. AID PROJ. NO.	SHEET NO.	TOTAL SHEETS
Supervisor		10 WASH.			
Designed By		JOB NUMBER			
Checked By					
Detailed By					
Bridge Projects Engr.					
Prelim. Plan By					
Architect/Specialist	DATE REVISION BY APPD				

BRIDGE AND STRUCTURES OFFICE

Washington State Department of Transportation

BRIDGE SHEET NO. SHEET OF SHEETS

Wed May 04 08:37:54 2011

2-B-7 SR JOB NO. SHEET

BRIDGE WITH APPROACH FILLS W74G P.C. GIRDERS "A" DIMENSION = 1'-1⅛" (PRELIMINARY ~ NOT FOR DESIGN) CAST-IN-PLACE CONC. SHALL BE 4000 PSI DECK PROTECTIVE SYSTEM I (EPOXY COATED REBARS)

COAST GUARD LIAISON
COAST GUARD PERMIT NOT REQ'D
PERMIT TARGET DATE

POINT OF MINIMUM VERTICAL CLEARANCE:
A22 STA. 80+51.6 (67.4' LT) = T1 STA. 9+51.0 (L)
A22 STA. 80+89.0 (67.0' LT) = BP2 STA. 147+53.0 (6.0' RT)

C.S. 2704 ~ PROJ. NO. XL1200 ~ OLYMPIC REGION ~ SR 16 ~ UNION AVE. TO PEARL ST. ~ SNAKE LAKE NORTH BRIDGE NO. 16/20W WIDENING

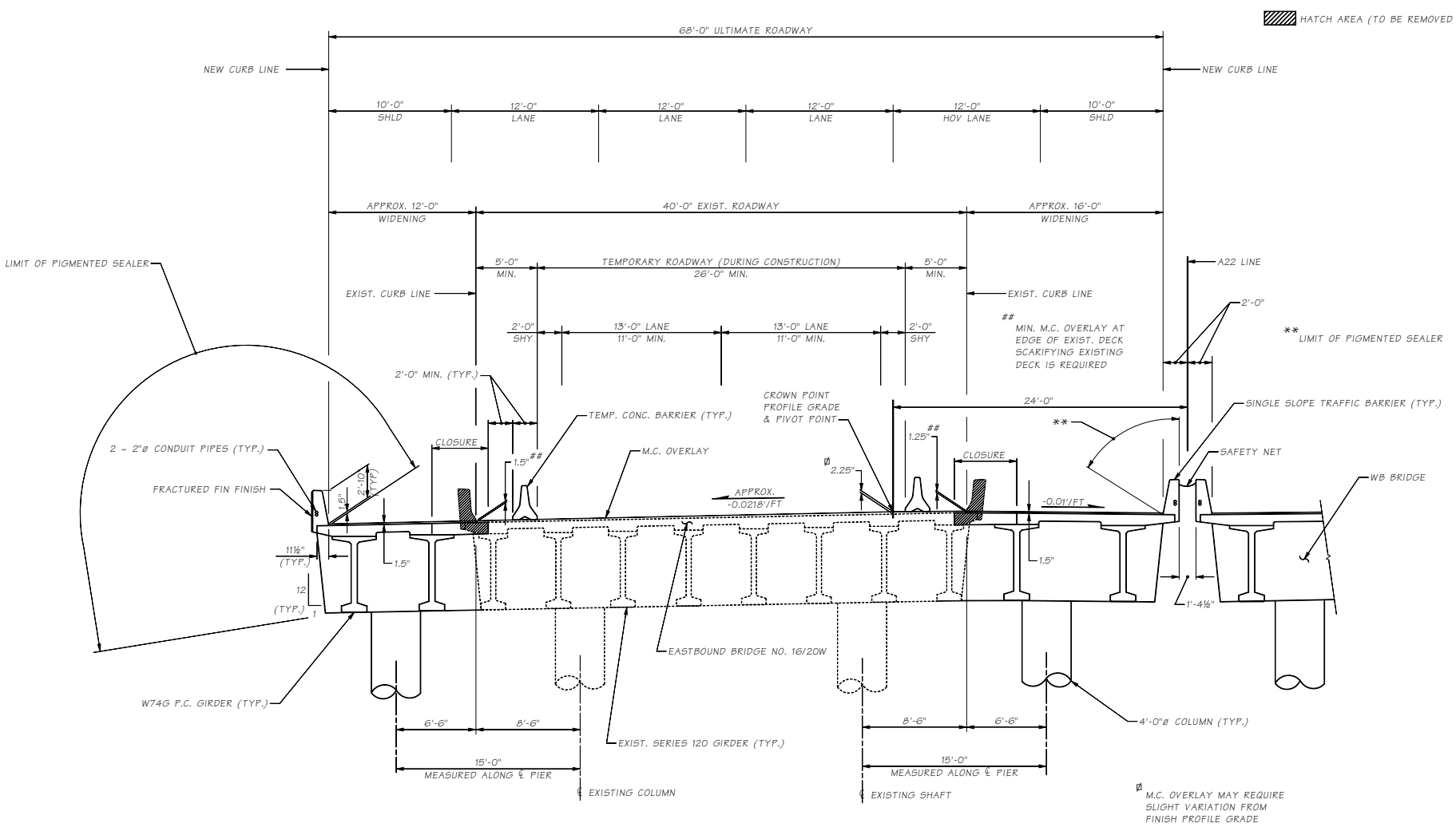

TYPICAL SECTION ~ EB BRIDGE

SHOWN NEAR INTERMEDIATE PIER 3
SUBSTRUCTURE DIMENSIONS ARE APPROXIMATE
HORIZONTAL DIMENSIONS MEASURED PERPENDICULAR TO A22 LINE (UNLESS OTHERWISE NOTED)

Bridge Design Engr.	M:\BRIDGELIB\BDM\Chapter 2\Window files\S2B8.wnd				REGION NO.	STATE	FED. AID PROJ. NO.	SHEET NO.	TOTAL SHEETS	BRIDGE OFFICE
Supervisor					10	WASH.				BRIDGE AND STRUCTURES OFFICE
Designed By					JOB NUMBER					Washington State Department of Transportation
Checked By										
Detailed By										PRELIMINARY PLAN
Bridge Projects Engr.										
Prelim. Plan By										
Architect/Specialist	DATE	REVISION	BY	APP'D						

Fri Sep 03 14:07:31 2010

SR 2 JOB NO. B-8 SHEET

C.S. 2704 ~ PROJ. NO. XL1200 ~ OLYMPIC REGION ~ SR 16 ~ UNION AVE. TO PEARL ST. ~ SNAKE LAKE NORTH BRIDGE NO. 16/20W WIDENING

BRIDGE SHEET NO. 2 SHEET OF SHEETS

EXISTING EB BRIDGE ELEVATIONS

OFFSETS MEASURED IN FEET.

A22 STA.	LT. OFFSET	ELEVATION	LT. OFFSET	ELEVATION
75+98.05			57.84	343.56
76+00.00			57.85	343.57
76+07.79	17.85	344.40		
76+10.00	17.85	344.41	57.87	343.64
76+20.00	17.88	344.45	57.89	343.70
76+30.00	17.91	344.50	57.87	343.75
76+40.00	17.92	344.55	57.85	343.79
76+50.00	17.91	344.61	57.83	343.84
76+60.00	17.89	344.66	57.84	343.90
76+70.00	17.89	344.72	57.85	343.96
76+80.00	17.90	344.77	57.87	344.02
76+90.00	17.90	344.82	57.85	344.08
77+00.00	17.90	344.88	57.84	344.14
77+10.00	17.91	344.93	57.83	344.20
77+20.00	17.91	344.99	57.83	344.25
77+30.00	17.91	345.04	57.84	344.30
77+40.00	17.90	345.09	57.85	344.35
77+50.00	17.90	345.14	57.85	344.40
77+60.00	17.89	345.19	57.82	344.44
77+70.00	17.89	345.24	57.80	344.48
77+80.00	17.89	345.29	57.79	344.52
77+90.00	17.89	345.33	57.80	344.56
78+00.00	17.89	345.38	57.80	344.60
78+10.00	17.88	345.42	57.81	344.64
78+20.00	17.88	345.47	57.82	344.69
78+30.00	17.88	345.51	57.82	344.74
78+40.00	17.88	345.54	57.83	344.78
78+50.00	17.89	345.58	57.84	344.80
78+60.00	17.89	345.62	57.85	344.82
78+70.00	17.89	345.67	57.86	344.83
78+80.00	17.88	345.71	57.86	344.90
78+90.00	17.87	345.76	57.85	344.96
79+00.00	17.88	345.80	57.84	345.02
79+10.00	17.88	345.85	57.84	345.07
79+20.00	17.89	345.90	57.84	345.11
79+30.00	17.89	345.94	57.83	345.15
79+40.00	17.90	345.97	57.83	345.19
79+50.00	17.90	346.01	57.83	345.23
79+60.00	17.90	346.04	57.84	345.26
79+70.00	17.90	346.07	57.84	345.30
79+80.00	17.90	346.09	57.85	345.32
79+90.00	17.90	346.11	57.86	345.35
80+00.00	17.90	346.12	57.86	345.37
80+10.00	17.90	346.13	57.84	345.39
80+20.00	17.90	346.14	57.82	345.41
80+30.00	17.91	346.13	57.80	345.42
80+40.00	17.91	346.12	57.82	345.42
80+50.00	17.92	346.11	57.83	345.43
80+60.00	17.92	346.11	57.85	345.43
80+70.00	17.91	346.13	57.85	345.42
80+80.00	17.90	346.14	57.84	345.41
80+90.00	17.90	346.14	57.84	345.40
81+00.00	17.90	346.13	57.82	345.38
81+10.00	17.91	346.12	57.80	345.37
81+17.04	17.91	346.11		
81+20.00			57.78	345.36
81+23.91			57.77	345.36

TYLER STREET ROADWAY ELEVATIONS

OFFSETS MEASURED IN FEET.

T1 STA.	LT. OFFSET	ELEVATION	RT. OFFSET	ELEVATION	LT. OFFSET	ELEVATION	RT. OFFSET	ELEVATION
9+10.00	27.07	315.03	27.08	315.02	4.93	315.50	4.63	315.54
9+20.00	27.06	314.98	27.09	314.96	4.94	315.44	4.63	315.48
9+30.00	27.05	314.93	27.10	314.90	4.94	315.37	4.63	315.42
9+40.00	27.05	314.88	27.12	314.86	4.94	315.33	4.65	315.38
9+50.00	27.05	314.83	27.13	314.84	4.93	315.32	4.71	315.37
9+60.00	27.04	314.78	27.15	314.82	4.92	315.30	4.76	315.36
9+70.00	27.04	314.74	27.16	314.79	4.91	315.29	4.82	315.35
9+80.00	27.04	314.69	27.18	314.77	4.90	315.27	4.88	315.34
9+90.00	27.04	314.65	27.20	314.75	4.90	315.26	4.93	315.33
9+95.84	27.01	314.52				-	-	-
9+97.75	27.01	314.49				-	-	-
10+00.00	27.15	314.53	27.21	314.73	4.93	315.25	4.97	315.32
10+10.00	27.81	314.61	27.20	314.77	4.98	315.26	4.95	315.35
10+20.00	28.36	314.64	27.22	314.80	4.96	315.29	4.92	315.38
10+30.00	28.91	314.68	27.24	314.83	4.93	315.33	4.90	315.41
10+40.00	29.47	314.71	27.25	314.87	4.90	315.36	4.88	315.44
10+50.00	30.02	314.74	27.27	314.90	4.88	315.40	4.85	315.46
10+60.00	30.58	314.77	27.28	314.93	4.85	315.44	4.83	315.50
10+70.00	31.13	314.80	27.26	314.99	4.82	315.47	4.83	315.54
10+80.00	31.68	314.86	27.23	315.04	4.82	315.52	4.83	315.59
10+90.00	32.22	314.91	27.20	315.10	4.84	315.57	4.83	315.64
11+00.00	32.77	314.97	27.17	315.15	4.85	315.62	4.82	315.69
11+10.00	33.32	315.02	27.15	315.21	4.86	315.67	4.82	315.74
11+20.00	33.86	315.08	27.15	315.26	4.88	315.72	4.82	315.80
11+30.00	34.41	315.13	27.16	315.32	4.89	315.78	4.80	315.88
11+40.00	34.94	315.18	27.16	315.37	4.89	315.85	4.79	315.97

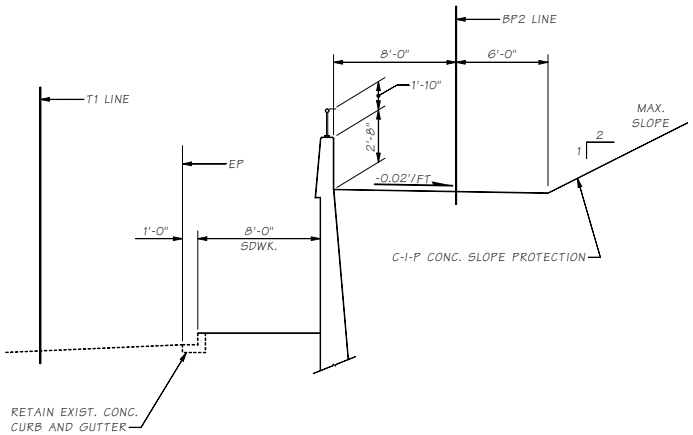

BP2 LINE UNDER EB BRIDGE (16/20W)

Bridge Design Engr.	M:\BRIDGELIB\BDM\Chapter 2\window files\S2B9.wnd			STATE	FED. AID PROJ. NO.	SHEET NO.	TOTAL SHEETS	BRIDGE AND STRUCTURES OFFICE
Supervisor				10 WASH.				Washington State Department of Transportation
Designed By								
Checked By				JOB NUMBER				
Detailed By								
Bridge Projects Engr.								
Prelim. Plan By								
Architect/Specialist	DATE	REVISION	BY	APP'D				

Fri Sep 03 14:07:32 2010

SR ___ JOB NO. ___ SHEET

BRIDGE SHEET NO. ___ SHEET ___ OF ___ SHEETS

C.S. 2704 ~ PROJ. NO. XL1200 ~ OLYMPIC REGION ~ SR 16 ~ UNION AVE. TO PEARL ST. ~ SNAKE LAKE NORTH BRIDGE NO. 16/20W WIDENING

Chapter 3 Loads — Contents

3.1 Scope . . . 3.1-1

3.2 Definitions . . . 3.2-1

3.3 Load Designations . . . 3.3-1

3.4 Limit States . . . 3.4-1

3.5 Load Factors and Load Combinations . . . 3.5-1
3.5.1 Load Factors for Substructure . . . 3.5-2

3.6 Loads and Load Factors for Construction . . . 3.6-1

3.7 Load Factors for Post-tensioning . . . 3.7-1
3.7.1 Post-tensioning Effects from Superstructure . . . 3.7-1
3.7.2 Secondary Forces from Post-tensioning, PS . . . 3.7-1

3.8 Permanent Loads . . . 3.8-1
3.8.1 Deck Overlay Requirement . . . 3.8-1

3.9 Live Loads . . . 3.9-1
3.9.1 Live Load Designation . . . 3.9-1
3.9.2 Live Load Analysis of Continuous Bridges . . . 3.9-1
3.9.3 Loading for Live Load Deflection Evaluation . . . 3.9-1
3.9.4 Distribution to Superstructure . . . 3.9-1
3.9.5 Bridge Load Rating . . . 3.9-3

3.10 Pedestrian Loads . . . 3.10-1

3.11 Wind Loads . . . 3.11-1
3.11.1 Wind Load to Superstructure . . . 3.11-1
3.11.2 Wind Load to Substructure . . . 3.11-1
3.11.3 Wind on Noise Walls . . . 3.11-1

3.12 Noise Barriers . . . 3.12-1

3.13 Earthquake Effects . . . 3.13-1

3.14 Earth Pressure . . . 3.14-1

3.15 Force Effects Due to Superimposed Deformations . . . 3.15-1

3.16 Other Loads . . . 3.16-1
3.16.1 Buoyancy . . . 3.16-1
3.16.2 Collision Force on Bridge Substructure . . . 3.16-1
3.16.3 Collision Force on Traffic Barrier . . . 3.16-1
3.16.4 Force from Stream Current, Floating Ice, and Drift . . . 3.16-1
3.16.5 Ice Load . . . 3.16-1
3.16.6 Uniform Temperature Load . . . 3.16-1

3.99 References . . . 3.99-1

Appendix 3.1-A1 Torsional Constants of Common Sections 3.1-A1-1
Appendix 3.1-B1 HL-93 Loading for Bridge Piers 3.1-B1-1

Chapter 3 Loads

3.1 Scope

AASHTO Load and Resistance Factor Design (LRFD) Specifications shall be the minimum design criteria used for all bridges except as modified herein.

3.2 Definitions

The definitions in this section supplement those given in LRFD Section 3.

Permanent Loads – Loads and forces that are, or are assumed to be, either constant upon completion of construction or varying only over a long time interval.

Transient Loads – Loads and forces that can vary over a short time interval relative to the lifetime of the structure.

3.3 Load Designations

Load designations follow LRFD Article 3.3.2 with the addition of:

PS = secondary forces from post-tensioning

3.4 Limit States

The basic limit state equation is as follows:

$$\Sigma \eta_i \gamma_i Q_i \leq \phi R_n \quad (3.4\text{-}1)$$

Where:

η_i = Limit State load modifier factor for ductility, redundancy, and importance of structure
γ_i = Load factor
Q_i = Load (i.e., dead load, live load, seismic load, etc.)
ϕ = Resistance factor
R_n = Nominal or ultimate resistance

This equation states that the force effects are multiplied by factors to account for uncertainty of in loading, structural ductility, operational importance, and redundancy, must be less than or equal to the available resistance multiplied by factors to account for variability and uncertainty in the materials and construction.

Use a value of 1.0 for η_i except for the design of columns when a minimum value of γ_i is appropriate. In such a case, use $\eta_i = 0.95$. Columns in seismic designs are proportioned and detailed to ensure the development of significant and visible inelastic deformations at the extreme event limit states before failure.

Strength IV load combination shall not be used for foundation design.

3.5 Load Factors and Load Combinations

The limit states load combinations, and load factors (γ_i used for structural design are in accordance with the AASHTO *LRFD Specifications*, Table 3.4.1-1. For foundation design, loads are factored after distribution through structural analysis or modeling.

The live load factor for Extreme Event-I Limit State load combination, γ_{EQ} as specified in the AASHTO *LRFD Specifications* Table 3.4.1-1 for all WSDOT bridges shall be taken equal to 0.50. The γ_{EQ} factor applies to the live load force effect obtained from the bridge live load analysis. Associated mass of live load need not be included in the dynamic analysis.

The AASHTO *LRFD Specifications* allow the live load factor in Extreme Event-I load combination, γ_{EQ}, be determined on a project specific basis. The commentary indicates that the possibility of partial live load, i.e., $\gamma_{EQ} < 1.0$, with earthquakes should be considered. The application of Turkstra's rule for combining uncorrelated loads indicates that $\gamma_{EQ} = 0.50$ is reasonable for a wide range of values of average daily truck traffic (ADTT). The NCHRP Report 489 recommends live load factor for Extreme Event-I Limit State, γ_{EQ} equal to 0.25 for all bridges. This factor shall be increased to γ_{EQ} equal to 0.50 for bridges located in main state routes and congested roads.

Since the determination of live load factor, γ_{EQ} based on ADTT or based on bridges located in congested roads could be confusing and questionable, it is decided that live load factor of γ_{EQ} equal to 0.50 to be used for all WSDOT bridges regardless the bridge location or congestion.

The base construction temperature may be taken as 64° F for the determination of Temperature Load.

The load factors γ_{TG} and γ_{SE} are to be determined on a project specific basis in accordance with Articles 3.4.1 and 3.12 of the *LRFD Specifications*. Load Factors for Permanent Loads, γ_p are provided in AASHTO *LRFD Specifications* Table 3.4.1-2.

The load factor for down drag loads shall be as specified in the AASHTO Specifications Table 3.4.1-2. The Geotechnical Report will provide the down drag force (*DD*). The down drag force (*DD*) is a load applied to the pile/shaft with the load factor specified in the Geotechnical Report. Generally, live loads (*LL*) are less than the down drag force and should be omitted when considering down drag forces.

The Load Factors for Superimposed Deformations, γ_p are provided in Table 3.5-3.

	PS	CR, SH
Superstructure	1.0	1.0
Fixed (bottom) substructure supporting Superstructure (using I_g only)	0.5	0.5
All other substructure supporting Superstructure (using I_g or $I_{effective}$)	1.0	1.0

Load Factors for Superimposed Deformations
Table 3.5-3

3.5.1 Load Factors for Substructure

Table 3.5-4 provides general guidelines for when to use the maximum or minimum shaft/pile/column permanent load factors for axial capacity, uplift, and lateral loading.

In general, substructure design should use unfactored loads to obtain force distribution in the structure, and then factor the resulting moment and shear for final structural design. All forces and load factors are as defined previously.

Axial Capacity	Uplift	Lateral Loading
DC_{max}, DW_{max}	DC_{min}, DW_{min}	DC_{max}, DW_{max}
DC_{max}, DW_{max} for causing shear	DC_{max}, DW_{max} for causing shear	DC_{max}, DW_{max} causing shear
DC_{min}, DW_{min} for resisting shear	DC_{min}, DW_{min} *for resisting shear*	DC_{min}, DW_{min} resisting shear
DC_{max}, DW_{max} for causing moments	DC_{max}, DW_{max} for causing moments	DC_{max}, DW_{max} for causing moments
DC_{min}, DW_{min} for resisting moments	DC_{min}, DW_{min} for resisting moments	DC_{min}, DW_{min} for resisting moments
EV_{max}	EV_{min}	EV_{max}
DD = varies	*DD* = varies	*DD* = varies
EH_{max}	EH_{max} if causes uplift	EH_{max}

Minimum/Maximum Substructure Load Factors for Strength Limit State
Table 3.5-4

In the table above "causing moment" and "causing shear" are taken to be the moment and shear causing axial, uplift, and lateral loading respectively. "Resisting" is taking to mean those force effects that are diminishing axial capacity, uplift, and lateral loading.

3.6 Loads and Load Factors for Construction

Unless otherwise specified, the load factor for construction loads and for any associated dynamic effects shall not be less than 1.5 in Strength I. The load factor for wind in Strength III shall not be less than 1.25.

When investigating Strength Load Combinations I, III, and V during construction, load factors for the weight of the structure and appurtenances, *DC* and *DW*, shall not be taken to be less than 1.25.

Where evaluation of construction deflections are required by the contract documents, Load Combination Service I shall apply. Construction dead loads shall be considered as part of the permanent load and construction transient loads considered part of the live load. The associated permitted deflections shall be included in the contract documents.

For falsework and formwork design loads, see *Standard Specifications* 6-02.3(17)A.

3.7 Load Factors for Post-tensioning

3.7.1 Post-tensioning Effects from Superstructure

When cast-in-place, post-tensioned superstructure is constructed monolithic with the piers, the substructure design should take into account frame moments and shears caused by elastic shortening and creep of the superstructure upon application of the axial post-tensioning force at the bridge ends. Frame moments and shears thus obtained should be added algebraically to the values obtained from the primary and secondary moment diagrams applied to the superstructure.

When cast-in-place, post-tensioned superstructure are supported on sliding bearings at some of the piers, the design of those piers should include the longitudinal force from friction on the bearings generated as the superstructure shortens during jacking. When post-tensioning is complete, the full permanent reaction from this effect should be included in the governing AASHTO load combinations for the pier under design.

3.7.2 Secondary Forces from Post-tensioning, PS

The application of post-tenstioning forces on a continuous structure produces reactions at the structure's support and internal forces that are collectively called secondary forces.

Secondary prestressing forces (i.e. secondary moments) are the force effects in continuous members, as a result of continuous post-tensioning. In frame analysis software, the secondary moments are generally obtained by subtracting the primary ($P*e$) from the total PS moments. Whether or not this is appropriate when using linear-elastic analysis is debatable, but accepted for lack of a better method. A load factor, γ_{PS}, of 1.0 is appropriate for the superstructure. For fixed columns a 50% reduction in PS force effects could be used given the elasto-plastic characteristics of the soil surrounding the foundation elements.

3.8 Permanent Loads

The design unit weights of common permanent loads are provided in Table 3.8-1.

Item	Load
Precast Pretensioned or Post-tensioned Spliced Girders	165 lb/ft^3
All Other Normal-Weight Reinforced Concrete	155 lb/ft^3
Concrete Overlay	150 lb/ ft^3
Stay-in-Place Form for Box Girder (applied to slab area less overhangs and webs)	5 lb/ft^2
Traffic Barrier (32″ - F Shape)	460 lb/ft
Traffic Barrier (42″ - F Shape)	710 lb/ft
Traffic Barrier (34″ – Single Slope)	490 lb/ft
Traffic Barrier (42″ – Single Slope)	670 lb/ft
Wearing Surface – Asphalt Concrete Pavement (ACP)	125 lb/ft^3
Wearing Surface – Hot Mix Asphalt (HMA)	140 lb/ft^3
Soil, Compact	125 lb/ft^3
Prestressed Concrete	165 lb/ft^3
Light Weight Aggregate Concrete	125 lb/ft^3

Permanent Loads
Table 3.8-1

3.8.1 Deck Overlay Requirement

Vehicular traffic will generate wear and rutting on a concrete bridge deck over the life of a bridge. One option to correct excessive wear is to add a Hot Mix Asphalt (HMA) overlay on top of the existing concrete deck. This type of overlay requires less construction time and is less expensive compared to removing a portion of the deck and adding a modified concrete overlay. The initial bridge design needs to incorporate the future overlay dead load.

Concrete bridge deck protection systems shall be in accordance with Section 5.7.4 for new bridge construction and widening projects. To accommodate a future deck overlay, bridges shall be designed as shown Table 3.8-2.

Superstructure Type	Concrete Cover	Overlay shown in the plan	Future Design Overlay
Deck Protection Systems 1 and 4: • Precast concrete, steel I or box girder with cast-in-place slab • Precast slabs with cast-in-place slab • Reinforced and post-tensioned box beams and slab bridges • Mainline Bridges on State Routes	2½″ (Including ½″ wearing surface)	None	2″ HMA
Deck Protection Systems 1 and 4: • Undercrossing bridge that carries traffic from a city street or county road • Bridges with raised sidewalks	2½″ (Including ½″ wearing surface)	None	None
Deck Protection System 2: • Concrete Overlays	Varies	Varies	None
Deck Protection System 3: • HMA Overlays	Varies	Varies	None
Deck Protection System 5: • Segmental bridges • Bridge Decks with longitudinal or transverse post-tensioning	1¾″ (Including ¼″ wearing surface)	1½″ Modified Concrete Overlay	None

Bridge Overlay Requirements
Table 3.8-2

The effect of the future deck overlay on girders camber, "A" dimension, creep, and profile grade need not be considered in superstructure design.

Deck overlay may be required at the time of original construction for some bridge widening or staged construction projects if ride quality is a major concern.

3.9 Live Loads

3.9.1 Live Load Designation

Live load design criteria are specified in the lower right corner of the bridge preliminary plan sheet. The Bridge Projects Unit determines the criteria using the following guideline:

- New bridges and Bridge widening with addition of substructure – HL-93
- Bridge superstructure widening with no addition of substructure – Live load criteria of the original design
- Detour and other temporary bridges – 75% of HL-93

3.9.2 Live Load Analysis of Continuous Bridges

The HL-93 live load model defined in the *LRFD Specifications* includes a dual truck train for negative moments and reactions and interior piers. The application of the dual truck train is somewhat unclear as specified in LRFD Article 3.6.1.3.1. WSDOT interprets that article as follows:

For negative moment between the points of contraflexure under a uniform load on all spans, shear, and reactions at interior piers only, 90% of the effect of two design trucks spaced a minimum of 50.0 ft. between the rear axle of the lead truck and the lead axle of the rear truck, combined with 90% of the effect of the design lane load. The distance between the 32.0-kip axles of each truck shall be taken as 14.0 ft. The two design trucks shall be placed in adjacent spans in such position to produce maximum force effect.

Negative moment, shear, and reactions at interior supports shall be investigated a dual design tandem spaced from 26.0 ft. to 40.0 ft apart, combined with the design lane load specified in LRFD Article C3.6.1.3.1. For the purpose of this article, the pairs of the design tandem shall be placed in adjacent spans in such position to produce maximum force effect.

3.9.3 Loading for Live Load Deflection Evaluation

The loading for live load deflection criteria is defined in LRFD Article 3.6.1.3.2. Live load deflections for the Service I limit state shall satisfy the requirements of LRFD 2.5.2.6.2.

3.9.4 Distribution to Superstructure

A. Multi Girder Superstructure

The live load distribution factor for exterior girder of multi girder bridges shall be as follows:

- For exterior girder design with slab cantilever length equal or less than one-half of the adjacent interior girder spacing, use the live load distribution factor for interior girder. The slab cantilever length is defined as the distance from the centerline of the exterior girder to the edge of the slab.
- For exterior girder design with slab cantilever length exceeding one-half of the adjacent interior girder spacing, use the lever rule with the multiple presence factor of 1.0 for single lane to determine the live load distribution. The live load used to design the exterior girder shall not be less than the live load used for the adjacent interior girder.
- The special analysis based on the conventional approximation of loads on piles as described in LRFD Article C4.6.2.2.2d shall not be used unless the effectiveness of diaphragms on the lateral distribution of truck load is investigated.

B. Concrete Box Girders

The load distribution factor for multi-cell cast in place concrete box girders shall be per *LRFD Specifications* for interior girders from Table 4.6.2.2.2b-1 for bending moment, and Table 4.6.2.2.3a-1 for shear. The live load distribution factor for interior girders shall then be multiplied by the number of webs to obtain the design live load for the entire superstructure. The correction factor for live load distribution for skewed support as specified in Tables 4.6.2.2.2e-1 for bending moment and 4.6.2.2.3c-1 for shear shall be considered.

$$DF = N_b \times Df_i \text{ Live load distribution factor for multi-cell box girder} \quad (3.9.4\text{-}1)$$

Where:

Df_i = Live load distribution factor for interior web
N_b = Number of webs

C. Multiple Presence Factors

A reduction factor will be applied in the substructure design for multiple loadings in accordance with AASHTO.

D. Distribution to Substructure

The number of traffic lanes to be used in the substructure design shall be determined by dividing the entire roadway slab width by 12. No fractional lanes shall be used. Roadway slab widths of less than 24 feet shall have a maximum of two design lanes.

E. Distribution to Crossbeam

The HL-93 loading is distributed to the substructure by placing wheel line reactions in a lane configuration that generates the maximum stress in the substructure. A wheel line reaction is ½ of the HL-93 reaction. Live loads are considered to act directly on the substructure without further distribution through the superstructure as illustrated in Figure 3.9-1. Normally, substructure design will not consider live load torsion or lateral distribution. Sidesway effects may be accounted for and are generally included in computer generated frame analysis results.

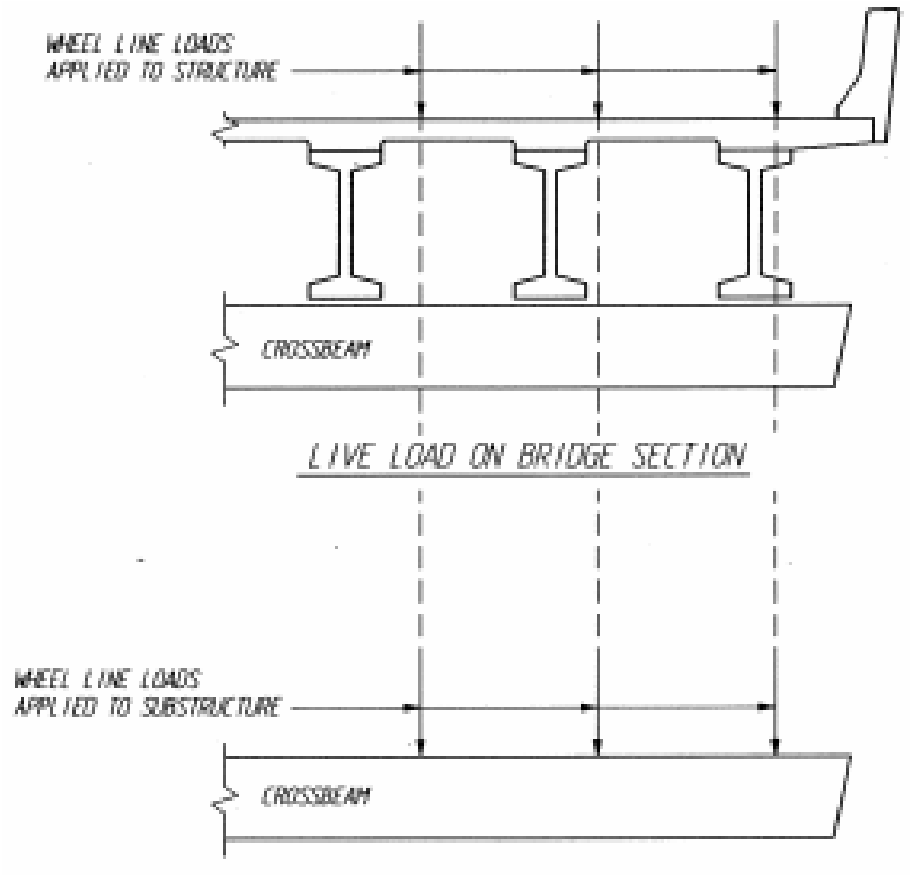

Live Load Distribution to Substructure
Figure 3.9-1

For steel and prestressed concrete superstructure where the live load is transferred to substructure through bearings, cross frames or diaphragms, the girder reaction may be used for substructure design. Live load placement is dependant on the member under design. Some examples of live load placement are as follows. The exterior vehicle wheel is placed 2 feet from the curb for maximum crossbeam cantilever moment or maximum eccentric foundation moment.

For crossbeam design between supports, the HL-93 lanes are placed to obtain the maximum moment in the member; then re-located to obtain the maximum shear or negative moment in the member.

For column design, the design lanes are placed to obtain the maximum transverse moment at the top of the column; then re-located to obtain the maximum axial force of the column.

3.9.5 Bridge Load Rating

Bridge designers are responsible for the bridges inventory and load rating of new bridges in accordance with the NBIS and the AASHTO Manual for Condition Evaluation of Bridge, the latest edition. See BDM Chapter 13.

3.10 Pedestrian Loads

Pedestrian bridges shall be designed in accordance with the requirements of the AASHTO *LFRD Guide Specifications for the Design of Pedestrian Bridges*, dated December 2009.

Seismic design of pedestrian bridges shall be performed in accordance with the requirements of the AASHTO *Guide Specifications for LRFD Seismic Bridge Design*.

3.11 Wind Loads

3.11.1 Wind Load to Superstructure

For the usual girder and slab bridges with less than 30′ height above ground, the following simplified wind pressure on structure (*WS*), could be used in lieu of the general method described in AASHTO LRFD Article 3.8.1.2:

- 0.05 kip per square foot, transverse
- 0.012 kip per square foot, longitudinal

Both forces shall be applied simultaneously.

For the usual girder and slab bridges with less than 30′ height above ground, the following simplified wind pressure on vehicle (*WL*), could be used in lieu of the general method described in AASHTO LRFD Article 3.8.1.3:

- 0.10 kip per linear foot, transverse
- 0.04 kip per linear foot, longitudinal

Both forces shall be applied simultaneously.

3.11.2 Wind Load to Substructure

Wind forces shall be applied to the substructure units in accordance with the loadings specified in AASHTO. Transverse stiffness of the superstructure may be considered, as necessary, to properly distribute loads to the substructure provided that the superstructure is capable of sustaining such loads. Vertical wind pressure, per AASHTO LRFD 3.8.2, shall be included in the design where appropriate, for example, on single column piers. Wind loads shall be applied through shear keys or other positive means from the superstructure to the substructure. Wind loads shall be distributed to the piers and abutments in accordance with the laws of statics. Transverse wind loads can be applied directly to the piers assuming the superstructure to act as a rigid beam. For large structures a more appropriate result might be obtained by considering the superstructure to act as a flexible beam on elastic supports.

3.11.3 Wind on Noise Walls

Wind load shall be assumed to be uniformly distributed on the area exposed to the wind, taken perpendicular to the assumed wind direction. Design wind pressure may be determined using either the tabulated values given below or the design equations that follow.

Height of structure, *Z*, at which wind loads are being calculated as measured from low ground, or water level.	Wind Velocity (mph)		
	80 mph	90 mph	100 mph
0 - 30 ft.	4 psf	5 psf	6 psf
30 - 40 ft.	6 psf	7 psf	9 psf
40 - 50 ft.	8 psf	10 psf	12 psf

Minimum Wind Pressure for City Terrain (Exposure A)
Table 3.11-1

Height of structure, *Z*, at which wind loads are being calculated as measured from low ground, or water level.	Wind Velocity (mph)		
	80 mph	90 mph	100 mph
0 - 30 ft.	9 psf	12 psf	15 psf
30 - 40 ft.	12 psf	15 psf	19 psf
40 - 50 ft.	14 psf	18 psf	22 psf

Minimum Wind Pressure for Suburban Terrain (Exposure B1)
Table 3.11-2

Height of structure, *Z*, at which wind loads are being calculated as measured from low ground, or water level.	Wind Velocity (mph)		
	80 mph	90 mph	100 mph
0 - 30 ft.	17 psf	21 psf	26 psf
30 - 40 ft.	19 psf	25 psf	30 psf
40 - 50 ft.	22 psf	28 psf	34 psf

Minimum Wind Pressure for Sparse Suburban Terrain (Exposure B2)
Table 3.11-3

Height of structure, *Z*, at which wind loads are being calculated as measured from low ground, or water level.	Wind Velocity (mph)		
	80 mph	90 mph	100 mph
0 - 30 ft.	26 psf	32 psf	40 psf
30 - 40 ft.	29 psf	36 psf	45 psf
40 - 50 ft.	31 psf	39 psf	49 psf

Minimum Wind Pressure for Open Country Terrain (Exposure C)
Table 3.11-4

Height of structure, *Z*, at which wind loads are being calculated as measured from low ground, or water level.	Wind Velocity (mph)		
	80 mph	90 mph	100 mph
0 - 30 ft.	39 psf	50 psf	62 psf
30 - 40 ft.	43 psf	54 psf	67 psf
40 - 50 ft.	45 psf	57 psf	71 psf

Minimum Wind Pressure for Coastal Terrain (Exposure D)
Table 3.11-5

Design Wind Pressure

For noise walls with heights greater than 50 ft. or subjected to wind velocities other than 80, 90, or 100 mph, the following equations shall be used to determine the minimum design wind pressure to be applied to the wall:

$$P = P_B\left(\frac{V_{DZ}}{V_B}\right)^2 \qquad (3.11.1\text{-}1)$$

Where:

P = Design wind pressure (psf)
P_B = Base wind pressure (psf)
V_{DZ} = Design wind velocity at design elevation (mph)
V_B = Base wind velocity (100 mph) at 30.0 ft height

Base Wind Pressure

The base wind pressure, P_B, shall be taken as 40 psf for walls and other large flat surfaces.

Design Wind Velocity

The design wind velocity is computed as:

$$V_{DZ} = 2.5V_0\left(\frac{V_{30}}{V_B}\right)\ln\left(\frac{Z}{Z_0}\right) \qquad (3.11.1\text{-}2)$$

Where:

V_0 = friction velocity (mph)
V_{30} = wind velocity at 30.0 ft above low ground or above design water level (mph)
Z = height of structure at which wind loads are being calculated as measured from low ground or water level, > 30.0 ft
Z_0 = friction length of upstream fetch (ft), (also referred to as roughness length)

Exposure Categories

City (A): Large city centers with at least 50% of the buildings having a height in excess of 70 ft. Use of this category shall be limited to those areas for which representative terrain prevails in the upwind direction at least one-half mile. Possible channeling effects of increased velocity pressures due to the bridge or structure's location in the wake of adjacent structures shall be accounted for.

Suburban (B1): Urban and suburban areas, wooded areas, or other terrain with numerous closely spaced obstructions having the size of single-family or larger dwellings. This category shall be limited to those areas for which representative terrain prevails in the upwind direction at least 1,500 ft.

Sparse Suburban (B2): Urban and suburban areas with more open terrain not meeting the requirements of Exposure B1.

Open Country (C): Open terrain with scattered obstructions having heights generally less than 30 ft. This category includes flat open country and grasslands.

Coastal (D): Flat unobstructed areas and water surfaces directly exposed to wind. This category includes large bodies of water, smooth mud flats, salt flats, and unbroken ice.

Friction Velocity

A meteorological wind characteristic taken for various upwind surface characteristics (mph).

Condition	City	Suburbs	Sparse Suburbs	Open Country	Coastal
V_0 (mph)	12.0	10.9	9.4	8.2	7.0

Wind Velocity at 30.0 ft

V_{30} may be established from:

Fastest-mile-of-wind charts available in ASCE 7-88 for various recurrence

Site-specific wind surveys, or

In the absence of better criterion, the assumption that $V_{30} = V_B = 100$ mph.

Friction Length

A meteorological wind characteristic of upstream terrain (ft).

Condition	City	Suburbs	Sparse Suburbs	Open Country	Coastal
Z_0 (ft)	8.20	3.28	0.98	0.23	0.025

3.12 Noise Barriers

The design requirement for noise barrier wall on bridges and walls are as follows:

1. The total height of noise barrier wall on bridges, from top of slab to top of noise barrier wall, shall be limited to 8′-0″
2. The total height of noise barrier wall on retaining walls, from top of roadway to top of noise barrier wall, shall be limited to 14′-0″
3. Noise barrier wall thickness shall be 7″ minimum
4. Two layers of reinforcing bars shall be specified in the cross section, with 1.5″ cover, minimum, over both faces as shown in the attached detail.
5. Wind load shall be based on Section 3.11 of this manual.
6. The vehicular collision force shall be based on the AASHTO LRFD Table A13.2-1 for design forces for traffic railing. The transverse force shall be applied horizontally at 3′-6″ height above deck.
7. Seismic load shall be as follows:

$$\text{Seismic Dead Load} = A \times f \times D \qquad (3.12\text{-}1)$$

Where:

A = Acceleration coefficient from the Geotechnical Report
D = Dead load of the wall
f = Dead load coefficient

Dead Load Coefficient, *f*	
Dead load coefficient, except on bridges – monolithic connection	1.0
Dead load coefficient, on bridges – monolithic connection	2.5
Dead load coefficient, for connection of precast wall to bridge barrier	8.0
Dead load coefficient, for connection of precast walls to retaining wall or moment slab barriers	5.0

The product of A and f shall not be taken less than 0.10.

8. AASHTO LRFD Bridge design specifications shall be used for the structural design of noise barrier walls.

3.13 Earthquake Effects

Earthquake loads see Chapter 4.

3.14 Earth Pressure

Earthquake loads see Chapter 7.

3.15 Force Effects Due to Superimposed Deformations

PS, CR, SH, TU and TG are superimposed deformations. Load factors for *PS*, *CR*, and *SH*, are as shown in Table 3.5-3. In non-segmental structures: *PS*, *CR* and *SH* are symbolically factored by a value of 1.0 in the strength limit state, but are actually designed for in the service limit state. For substructure in the strength limit state, the value of 0.50 for γ_{PS}, γ_{CR}, γ_{SH}, and γ_{TU} may be used when calculating force effects in non-segmental structures, but shall be taken in conjunction with the gross moment of inertia in the columns or piers. The larger of the values provided for load factor of *TU* shall be used for deformations and the smaller values for all other effects. The calculation of displacements for *TU* loads utilizes a factor greater than 1.0 to avoid under sizing joints, expansion devices, and bearings.

The current AASHTO *LRFD Specifications* require a load factor of 1.2 on *CR*, *SH*, and *TU* deformations, and 0.5 on other *CR/SH/TU* force effects. The lower value had been rationalized as dissipation of these force effects over time, particularly in the columns and piers.

Changing the load factors for creep and shrinkage is not straight-forward because *CR*, *SH* are "superimposed deformations", that is, force effects due to a change in material behavior that cause a change in the statical system. For safety and simplicity in design, they are treated as loads--despite not being measurable at time $t = 0$. However, behavior is nonlinear and application of the load factor must also be considered. Some software will run service load analysis twice: once with and once without *CR*, *SH* effects. The *CR* and *SH* can then be isolated by subtracting the results of the two runs. Other software will couple the *CR* and *SH* with the dead load, giving a shrinkage- or creep-adjusted dead load.

The proposed compromise is to assign creep and shrinkage the same load factor as the *DC* loads, but permit a factor of 1.0 if the project-specific creep coefficient can be determined and is then used in the linear analysis software.

Thermal and shrinkage loadings are induced by movements of the structure and can result from several sources. Movements due to temperature changes are calculated using coefficients of thermal expansion of 0.000006 ft/ft per degree for concrete and 0.0000065 ft/ft per degree for steel. Reinforced concrete shrinks at the rate of 0.0002 ft/ft.

3.16 Other Loads

3.16.1 Buoyancy

The effects of submergence of a portion of the substructure is to be calculated, both for designing piling for uplift and for realizing economy in footing design.

3.16.2 Collision Force on Bridge Substructure

See AASHTO LRFD Articles 3.6.5 and 3.14

3.16.3 Collision Force on Traffic Barrier

See AASHTO LRFD Article 3.6.5.1

3.16.4 Force from Stream Current, Floating Ice, and Drift

See AAHTO LRFD Article 3.9

3.16.5 Ice Load

In accordance with WSDOT HQ Hydraulics Office criteria, an ice thickness of 12″ shall be used for stream flow forces on piers throughout Washington State.

3.16.6 Uniform Temperature Load

The design thermal movement associated with a uniform temperature change may be calculated using the ranges of temperature as specified herein. The temperature ranges shown below reflect the difference between the extended lower and upper boundary to be used to calculate thermal deformation effects.

- Concrete Bridges (All Regions): 0° to 100°
- Steel Bridges (Eastern Washington): −30° to 120°
- Steel Bridges (Western Washington): 0° to 120°

3.99 References

1. AASHTO, *LRFD Bridge Design Specifications for Design of Highway Bridges*, 2004 and interims through 2009.

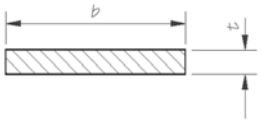

$$R = \frac{bt^3}{3}$$

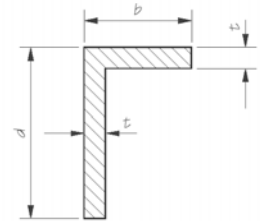

$$R = \frac{(b+d)t^3}{3}$$

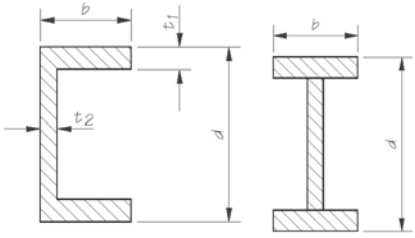

$$R = \frac{2bt_1^3 + dt_2^3}{3}$$

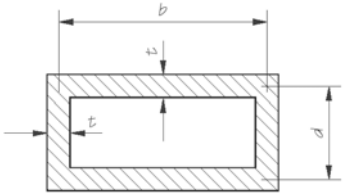

$$R = \frac{2tb^2d^2}{b+d}$$

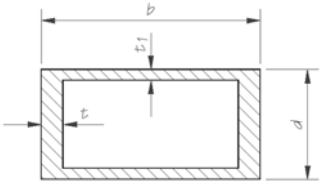

$$R = \frac{2tt_1(b-t)^2(d-t_1)^2}{bt + dt_1 - t^2 - t_1^2}$$

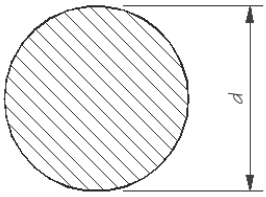

$$R = 0.0982d^4$$

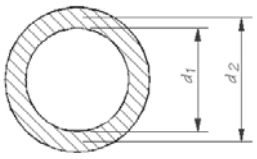

$$R = 0.0982\left(d_2^4 - d_1^4\right)$$



$$R = 1.0472t^3 d$$

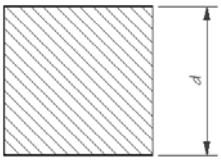

$$R = 0.1406d^4$$

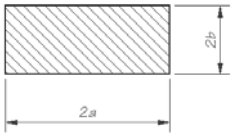

$$R = ab^3\left[\frac{16}{3} - 3.36\frac{b}{a}\left(1 - \frac{b^4}{12a^4}\right)\right]$$

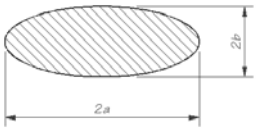

$$R = \frac{\pi a^3 b^3}{a^2 + b^2}$$

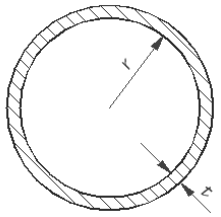

$$R = 2\pi r^3 t$$

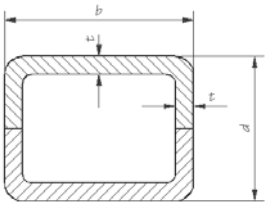

$$R = \frac{2tb^2 d^2}{b + d}$$

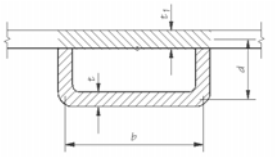

$$R = \frac{4b^2 d^2}{\frac{b + 2d}{t} + \frac{b}{t_1}}$$

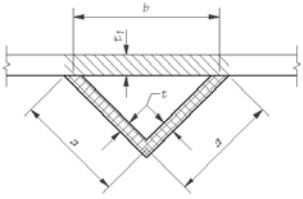

$$R = \frac{a^4}{\frac{2a}{t} + \frac{b}{t_1}}$$

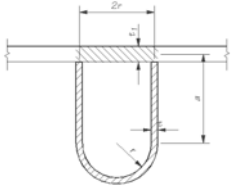

$$R = \frac{4r^2\left(\frac{\pi r}{2} + 2a\right)^2}{\frac{2a + \pi r}{t} + \frac{2r}{t_1}}$$

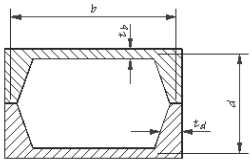

$$R = \frac{2b^2d^2}{\frac{b}{t_b} + \frac{d}{t_d}}$$

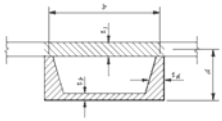

$$R = \frac{4b^2d^2}{\frac{b}{t_b} + \frac{2d}{t_d} + \frac{b}{t_1}}$$

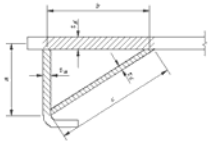

$$R = \frac{a^2b^2}{\frac{a}{t_a} + \frac{b}{t_b} + \frac{c}{t_c}}$$

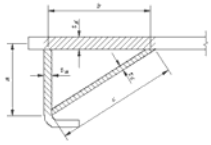

$$R = \frac{a^2b^2}{\frac{a}{t_a} + \frac{b}{t_b} + \frac{c}{t_c}}$$

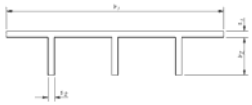

$$R = \frac{b_1t_1^3 + 3b_2t_2^3}{3}$$

Multi-Celled Sections

Torsion of two or more cells connect at the walls is a statically indeterminate problem. The general method to find the torsional rigidity, *R*, is as follows:

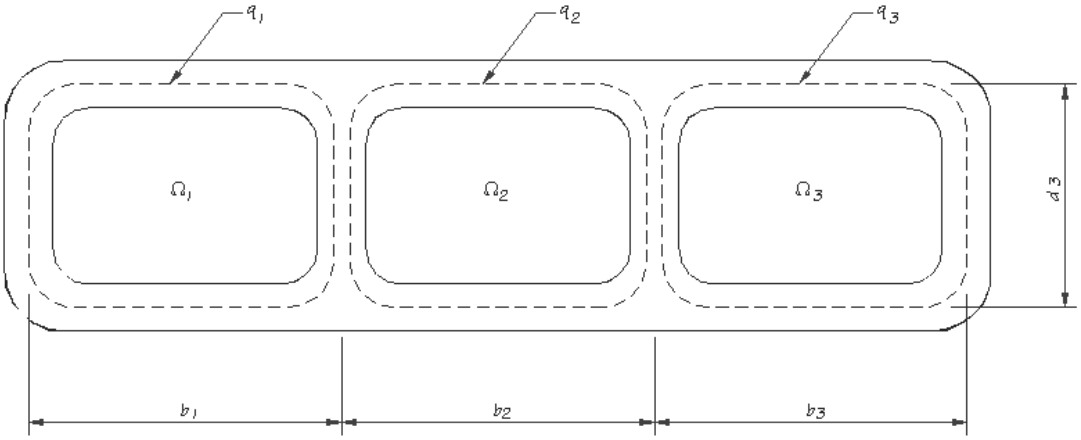

The equation for equilibrium for n cells is:

$$M_t = 2\sum_{i=1}^{n} q_i \Omega_i \qquad \text{(3.1-A1-1)}$$

Where q_i is the shear flow in cell i and Ω_i is the area enclosed by the center line of the walls inclosing the cell, and M_t is the twisting moment applied to the cell.

The equations of consistent deformation are:

$$S_{ji} q_i + S_{jj} q_j + S_{jk} q_k = 2\Omega_j \theta \qquad \text{(3.1-A1-2)}$$

Where:

$$S_{ji} = -\frac{1}{G}\int S_{ji}\,\frac{ds}{t}$$

$$S_{jj} = -\frac{1}{G}\int S_{jj}\,\frac{ds}{t}$$

$$S_{jk} = -\frac{1}{G}\int S_{jk}\,\frac{ds}{t}$$

G is the shear modulus of elasticity

$\int S_{ji}\,\frac{ds}{t}$ is the sum of the length of cell wall, common to cells *j* and *i*, divided by its thickness

$\int S_{jk}\,\frac{ds}{t}$ is the sum of the length of cell wall, common to cells *j* and *k*, divided by its thickness

$\int S_{jj}\,\frac{ds}{t}$ is the sum of the length of cell wall, common to cell *j*, divided by their respective thicknesses.

θ is the angle of twist in radians

Equation 3.1-A1-2 will yield *n* equations for *n* unknown shear flows and can be solved for the shear flows q_i in terms for *G* and the angle of twist θ. Knowing θ_i and Ω_i the torsional constant *R* may be calculated from:

$$R = \frac{2}{G\theta}\sum_{i=1}^{n} q_i \Omega_i \qquad (3.1\text{-A1-3})$$

A simplification of this method is to assume that the interior web members are not effective in torsion. The torsional constant may be approximated by:

$$R = \frac{4A^2}{\sum_i \frac{S_i}{t_i}} \qquad (3.1\text{-A1-4})$$

Where:

- A Is the area enclosed by the centerline of the exterior webs and the top and bottom slabs
- S_i Is the length of side *i*
- t_i Is the thickness of side *i*

Code Reference

1 Introduction

The purpose of this example is to demonstrate a methodology of analyzing a bridge pier for the HL-93 live load. This analysis consists of two plane frame analyzes. The first analysis is a longitudinal analysis of the superstructure. This analysis produces reactions at the intermediate piers, which are applied to a plane frame model of the pier.

2 Bridge Description

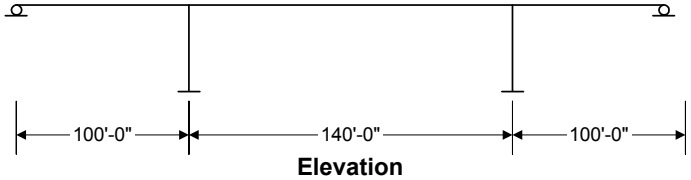

Elevation

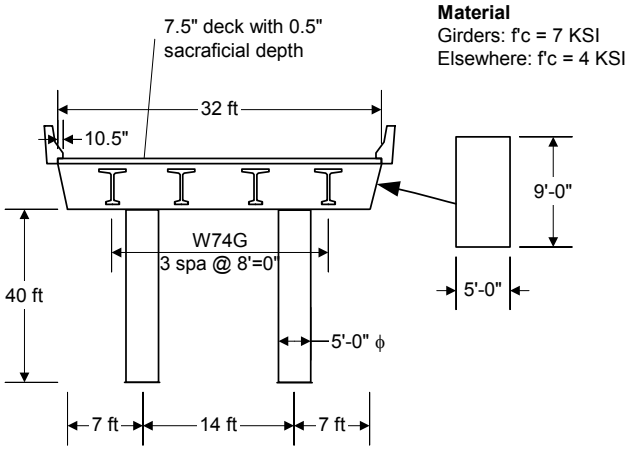

Typical Pier Elevation

3 Analysis Goals

The purpose of this analysis is to determine the following live load actions in the top and bottom of the column and in the footing:

- Maximum axial force and corresponding moments
- Maximum moments and corresponding axial force
- Maximum shears

Additionally the following live load actions will be computed for controlling design points in the cross beam

- Maximum moment
- Maximum shear

4 Material Properties

Let's begin the analysis by determining the material properties.

Code Reference

4.1 Girders

$E_c = 33{,}000 w_c^{1.5} \sqrt{f'_c}$

$w_c = 0.160$ KCF

$f'_c = 7$ KSI

$E_c = 33{,}000(0.160)^{1.5} \sqrt{7} = 5588 KSI$

4.2 Slab, Columns and Cross Beam

$E_c = 33{,}000 w_c^{1.5} \sqrt{f'_c}$

$w_c = 0.160$ KCF

$f'_c = 4$ KSI

$E_c = 33{,}000(0.160)^{1.5} \sqrt{4} = 4224 KSI$

5 Section Properties

Compute the geometric properties of the girder, columns, and cap beam.

5.1 Girder

The composite girder section properties can be obtained from the Section Properties Calculator in QConBridge™.

$A = 1254.6 in^2$

$I = 1007880 in^3$

5.2 Column

Properties of an individual column can be obtained by simple formula

$$A = \pi \frac{d^2}{4} = \pi \frac{\left(5 ft \cdot 12 \frac{in}{ft}\right)^2}{4} = 2827 in^2$$

$$I = \pi \frac{d^4}{64} = \pi \frac{\left(5 ft \cdot 12 \frac{in}{ft}\right)^4}{64} = 636172 in^4$$

For longitudinal analysis we need to proportion the column stiffness to match the stiffness of a single girder line. Four girder lines framing into a two column bent produce a rotation and axial deflection under a unit load, the stiffness of the column member in the longitudinal analysis model needs to be 25% of that of the bent to produce the same rotation and deflection under 25% of the load.

For longitudinal analysis the section properties of the column member are

$$A = \frac{(2 columns)(2827 in^2 \ per \ column)}{4 \ girder \ lines} = 1413 in^2$$

$$I = \frac{(2 columns)(636172 in^4 \ per \ column)}{4 \ girder \ lines} = 318086 in^4$$

Code Reference

NOTE
For columns of other shapes, and for skewed bents, the properties of the columns need to be computed in the plane of the longitudinal frame, and the plane of the bent for use in each analysis respectively.

5.3 Cap Beam

Cap beam properties can also be obtained by simple formula

$A = w \cdot h = 5\,ft \cdot 9\,ft \cdot 144\,\frac{in^2}{ft^2} = 64935 in^2$

$I = \frac{1}{12} w \cdot h^3 = \frac{1}{12} \cdot 5\,ft \cdot (9\,ft)^3 \cdot 20736\,\frac{in^4}{ft^4} = 6283008 in^4$

6 Longitudinal Analysis

The purpose of this analysis, initially, is to determine the maximum live load reactions that will be applied to the bent. After a transverse analysis is performed, the results from this analysis will be scaled by the number of loaded lanes causing maximum responses in the bent and distributed to individual columns.

The longitudinal analysis consists of applying various combinations of design lane and design trucks. The details can be found in LRFD 3.6 3.6

6.1 Loading

Now comes the tricky part. How do you configure and position the design vehicles to produce maximum reactions? Where do you put the dual truck train, and what headway spacing do you use to maximize the desired force effects? If we look at influence lines for axial force, moment, and shear at the top and bottom of the column, the loading configuration becomes apparent.

6.1.1 Influence Lines

The figures below are influence lines for axial force, shear, and moment at the top of Pier 2 for a unit load moving along a girder line. The influence lines for the bottom of the pier will be exactly the same, except the moment influence will be different by an amount equal to the shear times the pier height.

Code Reference

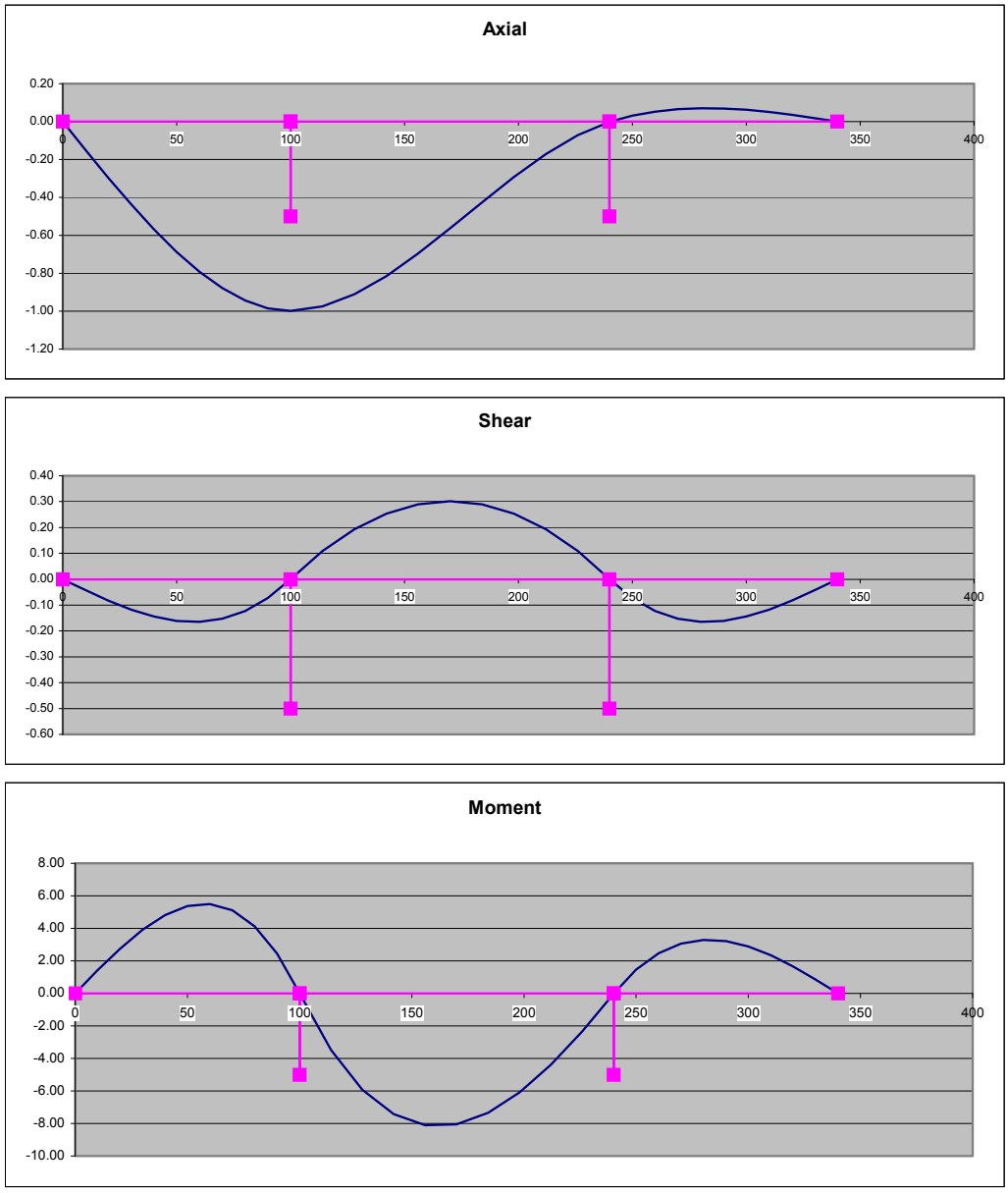

To achieve the maximum compressive reaction, the lane load needs to be in spans 1 and 2, and the dual truck need to straddle the pier and be as close to each other as possible. That is, the minimum headway spacing of 50 feet will maximize the compressive reaction.

Maximum shears and moments occur under two conditions. First, spans 1 and 3 are loaded with the lane load and the dual truck train. The headway spacing that causes the maximum response is in the range of 180 – 200 feet. Second, span 2 is loaded with the lane load and the dual truck train. The headway spacing is at its minimum value of 50 ft.

Code Reference

Analytically finding the exact location and headway spacing of the trucks for the extreme force effects is possible, but hardly worth the effort. Structural analysis tools with a moving load generator, such as GTSTRUDL™, can be used to quickly determine the maximum force effects.

6.2 Results

A longitudinal analysis is performed using GTSTRUDL™. The details of this analysis are shown in Appendix A.

The outcome of the longitudinal analysis consists of dual truck train and lane load results. These results need to be combined to produce the complete live load response. The complete response is computed as $Q_{LL+IM} = 0.9\left[(IM)(Dual\ Truck\ Train) + Lane\ Load\right]$. 3.6.1.3.1

The dynamic load allowance (impact factor) is given by the LRFD specifications as 33%. Note that the dynamic load allowance need not be applied to foundation components entirely below ground level. This causes us to combine the dual truck train and lane responses for cross beams and columns differently than for footings, piles, and shafts. 3.6.2.1

6.2.1 Combined Live Load Response

The tables below summarize the combined live load response. The controlling load cases are given in parentheses.

Maximum Axial

		Top of Pier	Bottom of Pier
	Axial (K/LANE)	Corresponding Moment (K-FT/LANE)	Corresponding Moment (K-FT/LANE)
Dual Truck Train	-117.9 (Loading 1014)	-146.2	103.4
Lane Load	-89.1 (Loading LS12)	-195.5	141.9
LL+IM (Column)	-221.3	-350.9	251.5
LL+IM (Footing)	-186.3	N/A	220.8

Maximum Moment – Top of Pier

	Moment (K-FT/LANE)	Corresponding Axial (K/LANE)
Dual Truck Train	-582.5 (Loading 1018)	-85.8
Lane Load	-364.2 (Loading LS2)	-49.4
LL+IM (Column)	-1025.0	-147.2
LL+IM (Footing)	N/A	N/A

Code Reference

Maximum Moment – Bottom of Pier

	Moment (K-FT/LANE)	Corresponding Axial (K/LANE)
Dual Truck Train	287.7 (Loading 1018)	-85.8
Lane Load	179.7 (Loading LS2)	-49.4
LL+IM (Column)	506.1	-147.2
LL+IM (Footing)	420.7	-121.7

Maximum Shear

	Shear (K/LANE)
Dual Truck Train	21.8 (Loading 1018)
Lane Load	13.6 (Loading LS2)
LL+IM (Column)	38.3
LL+IM (Footing)	31.9

7 Transverse Analysis

Now that we have the maximum lane reactions from the longitudinal girder line analysis, we need to apply these as loads to the bent frame.

7.1 Loading

The methodology for applying superstructure live load reactions to substructure elements is described in the BDM. This methodology consists of applying the wheel line reactions directly to the crossbeam and varying the number and position of design lanes. Appendix B describes modeling techniques for GTSTRUDL™.

BDM 9.1.1.1C

7.2 Results

7.2.1 Cap Beam

For this example, we will look at results for three design points, the left and right face of the left-hand column, and at the mid-span of the cap beam. Note that in the analysis, the wheel line reactions were applied from the left hand side of the bent. This does not result in a symmetrical set of loadings. However, because this is a symmetrical frame we expect symmetrical results. The controlling results from the left and right hand points “A” and “B” are used.

Code Reference

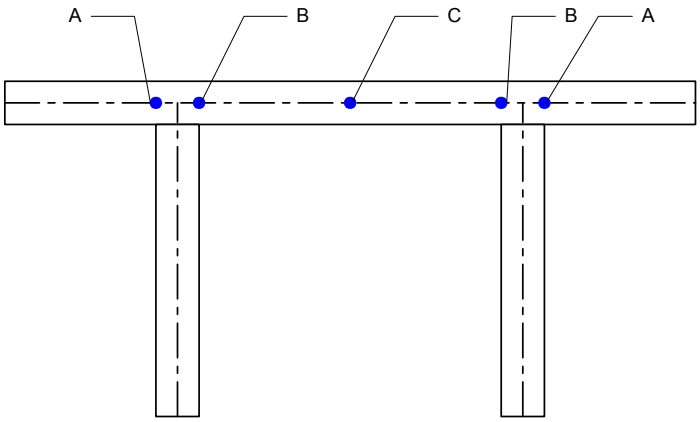

For the shear design of the crossbeam, the LRFD specifications allow us to determine the effects of moments and shears on the capacity of the section using the maximum factored moments and shears at a section. Hence, the results below do not show the maximum shears and corresponding moments. C5.8.3.4.2

The tables below summarize the results of the transverse analysis for the crossbeam. The basic results are adjusted with the multiple presence factors. The controlling load cases are in parentheses.

Point A

	Shear (K)	+Moment (K-FT)	-Moment (K-FT)
Force Effect	110.7 (Loading 1009)	0	-484.3 (1029)
Multiple Presence Factor	1.2	1.2	1.2
LL+IM	132.8	0	-581.2

Point B

	Shear (K)	+Moment (K-FT)	-Moment (K-FT)
Force Effect	155.8 (Loading 2330)	314.3 (Loading 1522)	-650.9 (Loading 1029)
Multiple Presence Factor	1.0	1.2	1.2
LL+IM	155.8	377.2	-781.1

Code Reference

Point C

	Shear (K)	+Moment (K-FT)	-Moment (K-FT)
Force Effect	87.9 (Loading 2036)	426.4 (Loading 1520)	-400.5 (Loading 1029)
Multiple Presence Factor	1.0	1.2	1.2
LL+IM	87.9	511.7	-480.6

7.2.2 Columns

The tables below show the live load results at the top and bottom of a column. The results are factored with the appropriate multiple presence factors. Controlling loads are in parentheses.

Maximum Axial

		Top of Column	Bottom of Column
	Axial (K)	Corresponding Moment (K-FT)	Corresponding Moment (K-FT)
Force Effect	-347.6 (Loading 2026)	34.1	28.4
Multiple Presence Factor	1.0	1.0	1.0
LL+IM	-347.6	34.1	28.4

Maximum Moment – Top of Column

	Moment (K-FT)	Corresponding Axial (K)
Force Effect	59.3 (Loading 1009)	-265.6
Multiple Presence Factor	1.2	1.2
LL+IM	71.2	-318.7

Maximum Moment – Bottom of Column

	Moment (K-FT)	Corresponding Axial (K)
Force Effect	-53.6 (Loading 1029)	55.6
Multiple Presence Factor	1.2	1.2
LL+IM	-64.3	66.7

Maximum Shear

	Shear (K)
Force Effect	-1.0 (Loading 1029)
Multiple Presence Factor	1.2
LL+IM	-1.2

7.2.3 Footings

Even though we didn't perform the transverse analysis with the footing loads, we can still obtain the results. Assuming we have a linear elastic system, the principle of

Code Reference

superposition can be used. The footing results are simply the column results scaled by the ratio of the footing load to the column load. For this case, the scale factor is 186.3÷221.3=0.84.

Maximum Axial

	Axial (K)	Corresponding Moment (K-FT)
LL+IM	-292	23.9

Maximum Moment

	Moment (K-FT)	Corresponding Axial (K)
LL+IM	-45.0	46.7

Maximum Shear

	Shear (K)
LL+IM	-1.0

8 Combining Longitudinal and Transverse Results

To get the full set of column forces, the results from the longitudinal and transverse analyses need to be combined. Recall that the longitudinal analysis produced moments, shears, and axial load for a single loaded lane whereas the transverse analysis produced column and footing forces for multiple loaded lanes.

Before we can combine the force effects we need to determine the per column force effect from the longitudinal analysis. To do this, we look at the axial force results in transverse model to determine the lane fraction that is applied to each column.

For maximum axial load, 2 lanes at 221.3 K/LANE produce an axial force of 347.6 K. The lane fraction carried by the column is 347.6/(2*221.3) = 0.785 (78.5%).
Mz = (-350.9 K-FT/LANE)(2 LANES)(0.785)(1.0) = -550.9 K-FT (Top of Column)
Mz = (251.5 K-FT/LANE)(2 LANES)(0.785)(1.0) = 394.9 K-FT (Bottom of Column)
Mz = (220.8 K-FT/LANE)(2 LANES)(0.785)(1.0) = 346.7 K-FT (Footing)

For maximum moment (and shear because the same loading governs) at the top of the column, 1 lane at 221.3 K/LANE produces an axial force of 318.7. (318.7/221.3 = 1.44). 144% of the lane reaction is carried by the column.
Mz = (-1025.0)(1.44)(1.2) = -1771.2 K-FT
Vx = (38.3)(1.44)(1.2) = 66.2 K (Column)
Vx = (31.9)(1.44)(1.2) = 55.1 K (Footing)

For maximum moment at the bottom of the column, 1 lane at 221.3 K/LANE produces an axial force of 64.3 K.(64.3/221.3 = 0.29) 29% of the lane reaction is carried by the column.
Mz = (506.1)(0.29)(1.2) = 176.1 K-FT (Column)
Mz = (420.7)(0.29)(1.2) = 146.4 K-FT (Footing)

Code Reference

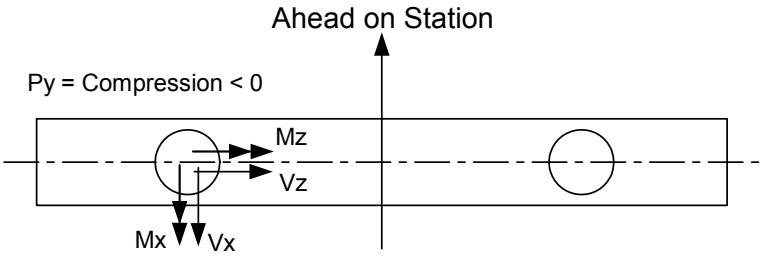

Vx and Mz determined from Longitudinal Analysis
Py, Vz and Mx determined from Transverse Analysis

Column

	Load Case				
	Maximum Axial Top	Maximum Axial Bottom	Maximum Moment Top	Maximum Moment Bottom	Shear
Axial (K)	-347.6	-347.6	- 318.7	66.7	
Mx (K-FT)	34.1	28.4	71.2	-64.3	
Mz (K-FT)	-550.9	394.9	-1771.2	176.1	
Vx (K)					66.2
Vz (K)					-1.2

Footing

	Load Cases		
	Maximum Axial	Maximum Moment Bottom	Shear
Axial (K)	-292	46.7	
Mx (K-FT)	23.9	-45.0	
Mz (K-FT)	346.7	146.4	
Vx (K)			72.7
Vz (K)			-1.0

9 Skew Effects

This analysis becomes only slightly more complicated when the pier is skewed with respect to the centerline of the bridge. The results of the longitudinal analysis need to be adjusted for skew before being applied to the transverse model.

Code Reference

The shears and moments produced by the longitudinal analysis are in the plane of the longitudinal model. These force vectors have components that are projected into the plane of the transverse model as show in the figure below. The transverse model loading must include these forces and moments for each wheel line load. Likewise, the skew adjusted results from the longitudinal analysis need to be used when combining results from the transverse analysis.

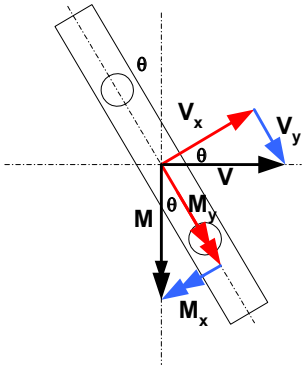

10 Summary

This example demonstrates a method for analyzing bridge piers subjected to the LRFD HL-93 live load. Other than the loading, the analysis procedure is the same as for the AASHTO Standard Specifications.

Code Reference

Appendix A – Longitudinal Analysis Details

This appendix shows the longitudinal analysis details. In the live load generation portion of the GTSTRUDL input, you will see multiple trials for live load analysis. Each trial uses a different range of headways pacing for the dual truck train. The first trial varies the headway spacing from 180 to 205 feet. Based on this, a tighter range between 193 and 198 feet was used to get the headway spacing corresponding to the maximum loads correct to within 1 foot.

```
        Commercial Software Rights Legend

Any use, duplication or disclosure of this software by or for the U.S.
Government shall be restricted to the terms of a license agreement in
accordance with the clause at DFARS 227.7202-3.

This computer software is an unpublished work containing valuable
trade secrets owned by the Georgia Tech Research Corporation (GTRC).
No access, use, transfer, duplication or disclosure thereof may be
made except under a license agreement executed by GTRC or its
authorized representatives and no right, title or interest thereto
is conveyed or granted herein, notwithstanding receipt or possession
hereof.  Decompilation of the object code is strictly prohibited.

  Georgia Tech Research Corporation
  Georgia Institute of Technology
  Atlanta, Georgia  30332   U.S.A.

       Copyright (c) 2002  GTRC
       ALL RIGHTS RESERVED.

# Wed Nov 19 08:57:01 2003

1GTICES/C-NP 2.5.0 MD-NT 2.0, January 1995.
 Proprietary to Georgia Tech Research Corporation, U.S.A.

Reading password file J:\GTSTRUDL\Gtaccess26.dat
 CI-i-audfile, Command AUDIT file FILE0857.aud has been activated.

*** G T S T R U D L ***
    RELEASE DATE          VERSION              COMPLETION NO.
    February, 2002         26.0                    4290

**** ACTIVE UNITS -  LENGTH   WEIGHT   ANGLE    TEMPERATURE   TIME
**** ASSUMED TO BE     INCH     POUND   RADIAN    FAHRENHEIT   SECOND

{    1} > $ ------------------------------------------------------------
{    2} > $ This is the Common Startup Macro; put your company-wide startup commands here.
{    3} > $ You can edit this file from Tools -- Macros.  Click "Startup" and then "Edit".
{    4} > $ ------------------------------------------------------------

{    1} > CINPUT 'C:\Documents and Settings\bricer\My Documents\BDM\HL93 Live Load -
```

Code Reference

```
{    2} >_Analysis of Piers\Longitudinal.gti'
{    3} > $ ---------------------------------------------------------
{    4} > $ Live Load Pier Analysis Example
{    5} > $ Longitudinal Anaysis to determine maximum lane reactions
{    6} > $ ---------------------------------------------------------
{    7} > $
{    8} > STRUDL



 ********************************************************************
 *                                                                  *
 *   ******                          G T S T R U D L                *
 *  ********                                                        *
 *  **    **                                                        *
 *  **               *****  ******  *****   **  **  *****   **      *
 *  **  **********  ******  ******  ******  **  **  ******  **      *
 *  **  **********  **        **    **  **  **  **  **  **  **      *
 *  **    ****      *****     **    ******  **  **  **  **  **      *
 *  **********       *****    **    *****   **  **  **  **  **      *
 *   ****** **          **    **    ** **   **  **  **  **  **      *
 *          **      ******    **    **  **  ******  ******  ******  *
 *          **      *****     **    **  **   ****   *****   ******  *
 *          **                                                      *
 *          **                 OWNED BY AND PROPRIETARY TO THE      *
 *          **                 GEORGIA TECH RESEARCH CORPORATION    *
 *                                                                  *
 *  RELEASE DATE         VERSION             COMPLETION NO.         *
 *  February, 2002       26.0                    4290               *
 *                                                                  *
 ********************************************************************



**** ACTIVE UNITS -  LENGTH   WEIGHT   ANGLE    TEMPERATURE   TIME
**** ASSUMED TO BE     INCH    POUND   RADIAN    FAHRENHEIT   SECOND

{    9} > TYPE PLANE FRAME XY
{   10} > OUTPUT LONG NAME
{   11} > UNITS FEET KIPS
{   12} > $
{   13} > JOINT COORDINATES
{   14} > $      Name            X coord           Y coord
```

Code Reference

```
{   15} > $  --------       -------------       ------------
{   16} >           1             0.00000            0.00000
{   17} >           2           100.00000            0.00000
{   18} >           3           240.00000            0.00000
{   19} >           4           340.00000            0.00000
{   20} >           5           100.00000          -40.00000 S
{   21} >           6           240.00000          -40.00000 S
{   22} > $
{   23} > $
{   24} > $ ------------- Boundary conditions -------
{   25} > $ --- Roller joints: rotation + horiz. translation
{   26} > DEFINE GROUP 'roller' ADD JOINTS 1 4
{   27} > STATUS SUPPORT JOINT GROUP 'roller'
{   28} > JOINT GRP 'roller' RELEASES FORCE X MOM Z
{   29} > $
{   30} > MEMBER INCIDENCES
{   31} > $      Name  Start joint  End joint
{   32} > $  --------     --------   --------
{   33} >           1            1          2
{   34} >           2            2          3
{   35} >           3            3          4
{   36} >           4            5          2
{   37} >           5            6          3
{   38} > $
{   39} > $ ------------- Properties ----------------
{   40} > UNITS INCHES
{   41} > MEMBER PROPERTIES
{   42} >    1 TO 3 AX 1255 IZ 1007880
{   43} >    4 TO 5 AX 1413 IZ 318086
{   44} >
{   45} > CONSTANTS
{   46} >    E 5588 MEMBERS 1 TO 3
{   47} >    E 4224 MEMBERS 4 TO 5
{   48} > $
{   49} > $ ------------- Loadings ------------------
{   50} > UNITS KIP FEET
{   51} > $
{   52} > $ --- Lane Loads ---
{   53} > LOADING 'LS12' 'Load load in span 1 and 2'
{   54} > MEMBER 1 2 LOAD FORCE Y UNIFORM FRAcTIONAL -0.640 LA 0.0 LB 1.0
{   55} >
{   56} > LOADING 'LS13' 'Load load in span 1 and 3'
{   57} > MEMBER 1 3 LOAD FORCE Y UNIFORM FRAcTIONAL -0.640 LA 0.0 LB 1.0
{   58} >
{   59} > LOADING 'LS2' 'Load load in span 2'
```

```
{  60} > MEMBER 2 LOAD FORCE Y UNIFORM FRACTIONAL -0.640 LA 0.0 LB 1.0
{  61} >
{  62} > LOADING 'LS3' 'Load load in span 3'
{  63} > MEMBER 3 LOAD FORCE Y UNIFORM FRACTIONAL -0.640 LA 0.0 LB 1.0
{  64} >
{  65} > $ --- Dual Truck Train ---
{  66} >
{  67} > $$ --- TRIAL 1 - (GOAL: Determine approximate headway spacing)
{  68} > $$ --- RESULTS: Maximums occured for headway spacings of 50' and 205'
{  69} > $$ --- Load ID Legend
{  70} > $$ - ID = 1000 TO 1999,  50' Headway Spacing
{  71} > $$ - ID = 2000 TO 2999, 180' Headway Spacing
{  72} > $$ - ID = 3000 TO 3999, 185' Headway Spacing
{  73} > $$ - ID = 4000 TO 4999, 190' Headway Spacing
{  74} > $$ - ID = 5000 TO 5999, 195' Headway Spacing
{  75} > $$ - ID = 6000 TO 6999, 200' Headway Spacing
{  76} > $$ - ID = 7000 TO 7999, 205' Headway Spacing
{  77} > $MOVING LOAD GENERATOR
{  78} > $
{  79} > $SUPERSTRUCTURE FOR MEMBERS 1 TO 3
{  80} > $TRUCK FWD GENERAL TRUCK 32.0 14.0 32.0 14.0 8.0  50.0 32.0 14.0 32.0 14.0 8.0
{  81} > $GENERATE LOAD INITIAL 1000 PRINT OFF
{  82} > $
{  83} > $TRUCK FWD GENERAL TRUCK 32.0 14.0 32.0 14.0 8.0 180.0 32.0 14.0 32.0 14.0 8.0
{  84} > $GENERATE LOAD INITIAL 2000 PRINT OFF
{  85} > $
{  86} > $TRUCK FWD GENERAL TRUCK 32.0 14.0 32.0 14.0 8.0 185.0 32.0 14.0 32.0 14.0 8.0
{  87} > $GENERATE LOAD INITIAL 3000 PRINT OFF
{  88} > $
{  89} > $TRUCK FWD GENERAL TRUCK 32.0 14.0 32.0 14.0 8.0 190.0 32.0 14.0 32.0 14.0 8.0
{  90} > $GENERATE LOAD INITIAL 4000 PRINT OFF
{  91} > $
{  92} > $TRUCK FWD GENERAL TRUCK 32.0 14.0 32.0 14.0 8.0 195.0 32.0 14.0 32.0 14.0 8.0
{  93} > $GENERATE LOAD INITIAL 5000 PRINT OFF
{  94} > $
{  95} > $TRUCK FWD GENERAL TRUCK 32.0 14.0 32.0 14.0 8.0 200.0 32.0 14.0 32.0 14.0 8.0
{  96} > $GENERATE LOAD INITIAL 6000 PRINT OFF
{  97} > $
{  98} > $TRUCK FWD GENERAL TRUCK 32.0 14.0 32.0 14.0 8.0 205.0 32.0 14.0 32.0 14.0 8.0
{  99} > $GENERATE LOAD INITIAL 7000 PRINT OFF
{ 100} > $
{ 101} > $END LOAD GENERATOR
{ 102} >
{ 103} > $ --- TRIAL 2 - (GOAL: Determine extreme values using refined headway spacing)
{ 104} > $ --- Load ID Legend
```

Code Reference

```
{  105} > $ - ID = 1000 TO 1999,  50' Headway Spacing
{  106} > $ - ID = 2000 TO 2999, 193' Headway Spacing
{  107} > $ - ID = 3000 TO 3999, 194' Headway Spacing
{  108} > $ - ID = 4000 TO 4999, 195' Headway Spacing
{  109} > $ - ID = 5000 TO 5999, 196' Headway Spacing
{  110} > $ - ID = 6000 TO 6999, 197' Headway Spacing
{  111} > $ - ID = 7000 TO 7999, 198' Headway Spacing
{  112} >
{  113} > MOVING LOAD GENERATOR
{  114} >
{  115} > SUPERSTRUCTURE FOR MEMBERS 1 TO 3
{  116} > TRUCK FWD GENERAL TRUCK 32.0 14.0 32.0 14.0 8.0  50.0 32.0 14.0 32.0 14.0 8.0
{  117} > GENERATE LOAD INITIAL 1000 PRINT OFF
{  118} >
{  119} > TRUCK FWD GENERAL TRUCK 32.0 14.0 32.0 14.0 8.0 193.0 32.0 14.0 32.0 14.0 8.0
{  120} > GENERATE LOAD INITIAL 2000 PRINT OFF
{  121} >
{  122} > TRUCK FWD GENERAL TRUCK 32.0 14.0 32.0 14.0 8.0 194.0 32.0 14.0 32.0 14.0 8.0
{  123} > GENERATE LOAD INITIAL 3000 PRINT OFF
{  124} >
{  125} > TRUCK FWD GENERAL TRUCK 32.0 14.0 32.0 14.0 8.0 195.0 32.0 14.0 32.0 14.0 8.0
{  126} > GENERATE LOAD INITIAL 4000 PRINT OFF
{  127} >
{  128} > TRUCK FWD GENERAL TRUCK 32.0 14.0 32.0 14.0 8.0 196.0 32.0 14.0 32.0 14.0 8.0
{  129} > GENERATE LOAD INITIAL 5000 PRINT OFF
{  130} >
{  131} > TRUCK FWD GENERAL TRUCK 32.0 14.0 32.0 14.0 8.0 197.0 32.0 14.0 32.0 14.0 8.0
{  132} > GENERATE LOAD INITIAL 6000 PRINT OFF
{  133} >
{  134} > TRUCK FWD GENERAL TRUCK 32.0 14.0 32.0 14.0 8.0 198.0 32.0 14.0 32.0 14.0 8.0
{  135} > GENERATE LOAD INITIAL 7000 PRINT OFF
{  136} >
{  137} > END LOAD GENERATOR
*** OUT OF MOVING LOAD GENERATOR
{  138} > $
{  139} > $ ---------- Analysis
{  140} > $
{  141} > STIFFNESS ANALYSIS
TIME FOR CONSISTENCY CHECKS FOR      5 MEMBERS      0.06 SECONDS
TIME FOR BANDWIDTH REDUCTION                        0.00 SECONDS
TIME TO GENERATE      5 ELEMENT STIF. MATRICES      0.05 SECONDS
TIME TO PROCESS    1337 MEMBER LOADS                0.05 SECONDS
TIME TO ASSEMBLE THE STIFFNESS MATRIX               0.02 SECONDS
TIME TO PROCESS       6 JOINTS                      0.01 SECONDS
TIME TO SOLVE WITH    1 PARTITIONS                  0.01 SECONDS
```

Code Reference

```
 TIME TO PROCESS      6 JOINT DISPLACEMENTS          0.02 SECONDS
 TIME TO PROCESS      5 ELEMENT DISTORTIONS          0.04 SECONDS
 TIME FOR STATICS CHECK                              0.01 SECONDS
 {  142} > $
 {  143} > $ ------------- Results
 {  144} > $
 {  145} > OUTPUT BY MEMBER
 {  146} >
 {  147} > $ ----------- Dual Truck Results Envelope (top and bottom of pier)
 {  148} > LOAD LIST 1000 TO 7999
 {  149} > LIST FORCE ENVELOPE MEMBER 4 SECTION FRACTIONAL NS 2 1.0 0.0
1

    ***************************
    *RESULTS OF LATEST ANALYSES*
    ***************************


     PROBLEM - NONE      TITLE - NONE GIVEN


     ACTIVE UNITS  FEET KIP  RAD  DEGF SEC


     INTERNAL MEMBER RESULTS
     -----------------------

      MEMBER FORCE ENVELOPE

-------------------------------------------------------------------------------------------------------------------------------------------
---      MEMBER  4                                                                                                                      ---
-------------------------------------------------------------------------------------------------------------------------------------------

   DISTANCE         /-------------------  FORCE  --------------------//------------------  MOMENT  ------------------/
  FROM START              AXIAL         Y SHEAR         Z SHEAR         TORSION       Y BENDING       Z BENDING

    1.000  FR          5.504462        21.75733                                                       459.4002
                           6047            1018                                                          3024
                      -117.8832       -17.13201                                                      -582.5873
                           1014            3024                                                          1018

    0.000               5.504462        21.75733                                                       287.7058
                           6047            1018                                                          1018
                      -117.8832       -17.13201                                                      -225.8802
                           1014            3024                                                          3024
```

Code Reference

```
{  150} >
{  151} > $ ----------- Lane Load Results Envelope (top and bottom of pier)
{  152} > LOAD LIST 'LS12' 'LS13' 'LS2' 'LS3'
{  153} > LIST FORCE ENVELOPE MEMBER 4 SECTION FRACTIONAL NS 2 1.0 0.0


   ***************************
   *RESULTS OF LATEST ANALYSES*
   ***************************


    PROBLEM - NONE      TITLE - NONE GIVEN


    ACTIVE UNITS  FEET KIP  RAD  DEGF SEC


    INTERNAL MEMBER RESULTS
    -----------------------

     MEMBER FORCE ENVELOPE

-------------------------------------------------------------------------------------------------------------------------------------------------
---      MEMBER  4                                                                                                                            ---
-------------------------------------------------------------------------------------------------------------------------------------------------

   DISTANCE         /-------------------  FORCE  -------------------//------------------  MOMENT  ------------------/
  FROM START              AXIAL         Y SHEAR         Z SHEAR         TORSION       Y BENDING       Z BENDING

    1.000  FR          3.302270        13.59967                                                       276.7290
                           LS3             LS2                                                           LS13
                      -89.14960       -10.33223                                                      -364.2411
                          LS12            LS13                                                           LS2

    0.000               3.302270        13.59967                                                       179.7457
                           LS3             LS2                                                           LS2
                      -89.14960       -10.33223                                                      -136.5602
                          LS12            LS13                                                           LS13


{  154} >
{  155} > $ ----------- Corresponding force effects maximum axial, shear, and moment
{  156} > LOAD LIST 1014 1018 'LS12' 'LS2'
```

Code Reference

```
{  157} > LIST SECTION FORCES MEMBER 4 SECTION FRACTIONAL NS 2 1.0 0.0


   ***************************
   *RESULTS OF LATEST ANALYSES*
   ***************************


    PROBLEM - NONE      TITLE - NONE GIVEN


    ACTIVE UNITS  FEET KIP  RAD  DEGF SEC


    INTERNAL MEMBER RESULTS
    -----------------------

     MEMBER SECTION FORCES

-------------------------------------------------------------------------------------------------------------------------------
---      MEMBER  4                                                                                                          ---
-------------------------------------------------------------------------------------------------------------------------------


         LOADING    LS12        Load load in span 1 and 2

   DISTANCE         /-------------------  FORCE  -------------------//-----------------  MOMENT  -----------------/
  FROM START               AXIAL         Y SHEAR         Z SHEAR         TORSION       Y BENDING       Z BENDING

    1.000  FR          -89.14960        8.433558                                                      -195.4770
    0.000              -89.14960        8.433558                                                       141.8653


         LOADING    LS2         Load load in span 2

   DISTANCE         /-------------------  FORCE  -------------------//-----------------  MOMENT  -----------------/
  FROM START               AXIAL         Y SHEAR         Z SHEAR         TORSION       Y BENDING       Z BENDING

    1.000  FR          -49.40132        13.59967                                                      -364.2411
    0.000              -49.40132        13.59967                                                       179.7458


         LOADING    1014        USERS TRUCK      FORWARD  PIVOT ON SECTION  2    MEMBER 2

   DISTANCE         /-------------------  FORCE  -------------------//-----------------  MOMENT  -----------------/
```

Code Reference

```
FROM START              AXIAL         Y SHEAR         Z SHEAR         TORSION       Y BENDING       Z BENDING

  1.000  FR          -117.8832        6.239560                                                      -146.2155
  0.000              -117.8832        6.239560                                                       103.3669


       LOADING    1018        USERS TRUCK      FORWARD  PIVOT ON SECTION  6    MEMBER 2

 DISTANCE         /-------------------  FORCE  -------------------//------------------  MOMENT  ------------------/
FROM START              AXIAL         Y SHEAR         Z SHEAR         TORSION       Y BENDING       Z BENDING

  1.000  FR          -85.84380        21.75733                                                      -582.5874
  0.000              -85.84380        21.75733                                                       287.7058
```

Code Reference

Code Reference

Appendix B – Transverse Analysis Details

This appendix shows the details of the transverse analysis. The interesting thing to note about the transverse analysis is the live load truck configuration. A technique of treating the wheel line reactions as a longitudinal live load is used. A two axle "truck" is created. The truck is positioned so that it is on the left edge, center, and right edge of the design lane. In order to keep the axles in the correct position, a dummy axle with a weight of 0.0001 kips was used. This dummy axial is the lead axle of the truck and it is positioned in such a way as to cause the two "real" axles to fall in the correct locations within the design lanes.

The GTSTRUDL live load generator uses partial trucks when it is bring a truck onto or taking it off a bridge. As such, less then the full number of axles are applied to the model. For the transverse analysis, we do not want to consider the situation when only one of the two wheel lines is on the model. As such, several load cases are ignored by way of the LOAD LIST command on line76 of the output.

```
        Commercial Software Rights Legend

     Any use, duplication or disclosure of this software by or for the U.S.
     Government shall be restricted to the terms of a license agreement in
     accordance with the clause at DFARS 227.7202-3.

     This computer software is an unpublished work containing valuable
     trade secrets owned by the Georgia Tech Research Corporation (GTRC).
     No access, use, transfer, duplication or disclosure thereof may be
     made except under a license agreement executed by GTRC or its
     authorized representatives and no right, title or interest thereto
     is conveyed or granted herein, notwithstanding receipt or possession
     hereof.  Decompilation of the object code is strictly prohibited.

       Georgia Tech Research Corporation
       Georgia Institute of Technology
       Atlanta, Georgia  30332   U.S.A.

            Copyright (c) 2002  GTRC
              ALL RIGHTS RESERVED.

     # Wed Nov 19 09:23:01 2003


     1GTICES/C-NP 2.5.0 MD-NT 2.0, January 1995.
      Proprietary to Georgia Tech Research Corporation, U.S.A.

     Reading password file J:\GTSTRUDL\Gtaccess26.dat
      CI-i-audfile, Command AUDIT file FILE0923.aud has been activated.

     *** G T S T R U D L ***
         RELEASE DATE          VERSION              COMPLETION NO.
          February, 2002         26.0                    4290

     **** ACTIVE UNITS -  LENGTH   WEIGHT   ANGLE    TEMPERATURE   TIME
     **** ASSUMED TO BE     INCH     POUND   RADIAN     FAHRENHEIT   SECOND

     {    1} > $ ------------------------------------------------------------
     {    2} > $ This is the Common Startup Macro; put your company-wide startup commands
     here.
     {    3} > $ You can edit this file from Tools -- Macros.  Click "Startup" and then
     "Edit".
     {    4} > $ ------------------------------------------------------------
```

Code Reference

```
{    1} > CINPUT 'C:\Documents and Settings\bricer\My Documents\BDM\HL93 Live Load -
{    2} >_Analysis of Piers\Transverse.gti'
{    3} > $ ---------------------------------------------------------
{    4} > $ Live Load Pier Analysis Example
{    5} > $ Transverse Anaysis to determine column loads
{    6} > $ ---------------------------------------------------------
{    7} > $
{    8} > STRUDL



 ********************************************************************
 *                                                                  *
 *   ******                          G T S T R U D L                *
 *  ********                                                        *
 *  **    **                                                        *
 *  **              *****  ******  *****   **  **  *****   **       *
 *  **  **********  ******  ******  ******  **  **  ******  **       *
 *  **  **********  **        **    **  **  **  **  **  **  **       *
 *  **    ****      *****     **    ******  **  **  **  **  **       *
 *  **********       *****    **    *****   **  **  **  **  **       *
 *   ****** **          **    **    ** **   **  **  **  **  **       *
 *          **      ******    **    **  **  ******  ******  ******   *
 *          **      *****     **    **  **   ****   *****   ******   *
 *          **                                                      *
 *          **                OWNED BY AND PROPRIETARY TO THE       *
 *          **                GEORGIA TECH RESEARCH CORPORATION     *
 *                                                                  *
 *  RELEASE DATE         VERSION             COMPLETION NO.          *
 *  February, 2002       26.0                    4290                *
 *                                                                  *
 ********************************************************************



**** ACTIVE UNITS -  LENGTH   WEIGHT   ANGLE    TEMPERATURE   TIME
**** ASSUMED TO BE     INCH    POUND   RADIAN    FAHRENHEIT   SECOND

{    9} > TYPE PLANE FRAME XY
{   10} > MATERIAL STEEL
{   11} > OUTPUT LONG NAME
{   12} > UNITS FEET KIPS
```

```
{ 13} > $
{ 14} > JOINT COORDINATES
{ 15} > $     Name          X coord          Y coord
{ 16} > $ --------  ----------------  ----------------
{ 17} >                        -14.00000         40.00000
{ 18} >                         -7.00000         40.00000
{ 19} >                          7.00000         40.00000
{ 20} >                         14.00000         40.00000
{ 21} >                         -7.00000          0.00000 S
{ 22} >                          7.00000          0.00000 S
{ 23} > $
{ 24} > $
{ 25} > MEMBER INCIDENCES
{ 26} > $     Name  Start joint  End joint
{ 27} > $ --------  ----------  ---------
{ 28} >                      1           1           2
{ 29} >                      2           2           3
{ 30} >                      3           3           4
{ 31} >                      4           5           2
{ 32} >                      5           6           3
{ 33} > $
{ 34} > $ ------------ Properties ------------------
{ 35} > UNITS INCHES
{ 36} > MEMBER PROPERTIES
{ 37} >    1 TO 3  AX 64935 IZ 6283008 $ CAP BEAM
{ 38} >    4 TO 5  AX  2827 IZ  636172 $ COLUMNS
{ 39} > UNITS FEET
{ 40} > $
{ 41} > $ ------------ Loadings --------------------
{ 42} > $
{ 43} > MOVING LOAD GENERATOR
{ 44} > SUPERSTRUCTURE FOR MEMBERS 1 TO 3
{ 45} >
{ 46} > $ One lane loaded - Left Aligned
{ 47} > TRUCK FWD GENERAL TRUCK NP 3 110.7 6 110.7 0.875 0.0001
{ 48} > GENERATE LOAD INITIAL 1000 PRINT OFF
{ 49} >
{ 50} > $ One lane loaded - Center Aligned
{ 51} > TRUCK FWD GENERAL TRUCK NP 3 110.7 6 110.7 2.125 0.00001
{ 52} > GENERATE LOAD INITIAL 1300 PRINT OFF
{ 53} >
{ 54} > $ One lane loaded - Right Aligned
{ 55} > TRUCK FWD GENERAL TRUCK NP 3 110.7 6 110.7 3.125 0.0001
{ 56} > GENERATE LOAD INITIAL 1500 PRINT OFF
{ 57} >
```

Code Reference

```
{   58} >
{   59} > $ Two lanes loaded - Left Aligned
{   60} > TRUCK FWD GENERAL TRUCK NP 5 110.7 6 110.7 6 110.7 6 110.7 0.875 0.0001
{   61} > GENERATE LOAD INITIAL 2000 PRINT OFF
{   62} >
{   63} > $ Two lanes loaded - Center Aligned
{   64} > TRUCK FWD GENERAL TRUCK NP 5 110.7 6 110.7 6 110.7 6 110.7 2.125 0.00001
{   65} > GENERATE LOAD INITIAL 2300 PRINT OFF
{   66} >
{   67} > $ Two lanes loaded - Right Aligned
{   68} > TRUCK FWD GENERAL TRUCK NP 5 110.7 6 110.7 6 110.7 6 110.7 3.125 0.0001
{   69} > GENERATE LOAD INITIAL 2500 PRINT OFF
{   70} >
{   71} > END LOAD GENERATOR
*** OUT OF MOVING LOAD GENERATOR
{   72} > $
{   73} > $ ---------- Analysis
{   74} > $
{   75} > $ --- Keep active only those loads where all of the "axles" are on the structure
{   76} > LOAD LIST 1009 TO 1029 1311 TO 1330 1513 TO 1531  2026 TO 2037 2328 TO 2338 2530 TO 2539
{   77} > STIFFNESS ANALYSIS
TIME FOR CONSISTENCY CHECKS FOR      5 MEMBERS      0.00 SECONDS
TIME FOR BANDWIDTH REDUCTION                        0.00 SECONDS
TIME TO GENERATE      5 ELEMENT STIF. MATRICES      0.00 SECONDS
TIME TO PROCESS     345 MEMBER LOADS                0.01 SECONDS
TIME TO ASSEMBLE THE STIFFNESS MATRIX               0.00 SECONDS
TIME TO PROCESS       6 JOINTS                      0.00 SECONDS
TIME TO SOLVE WITH    1 PARTITIONS                  0.00 SECONDS
TIME TO PROCESS       6 JOINT DISPLACEMENTS         0.01 SECONDS
TIME TO PROCESS       5 ELEMENT DISTORTIONS         0.00 SECONDS
TIME FOR STATICS CHECK                              0.00 SECONDS
{   78} > $
{   79} > $ ---------- Results
{   80} > $
{   81} > $ CAP BEAM RESULTS (FACE OF COLUMN AND CENTERLINE BEAM)
{   82} > LIST FORCE ENVELOPE MEMBER 1 SECTION NS 1 4.5
1

     ***********************************
     *RESULTS OF LATEST ANALYSES*
     ***********************************


     PROBLEM - NONE      TITLE - NONE GIVEN
```

Code Reference

```
    ACTIVE UNITS  FEET KIP  RAD  DEGF SEC


    INTERNAL MEMBER RESULTS
    -----------------------

     MEMBER FORCE ENVELOPE

-------------------------------------------------------------------------------------------------------------------------------
---      MEMBER  1                                                                                                          ---
-------------------------------------------------------------------------------------------------------------------------------

   DISTANCE         /-------------------  FORCE  -------------------//------------------  MOMENT  ------------------/
  FROM START              AXIAL         Y SHEAR         Z SHEAR         TORSION       Y BENDING       Z BENDING

    4.500             0.0000000E+00    110.7001                                                    0.4612272E-11
                          1009           1009                                                        2539
                      0.0000000E+00  -0.3200976E-11                                               -401.2880
                          1010           2336                                                        1009


{   83} > LIST FORCE ENVELOPE MEMBER 2 SECTION NS 3 2.5 7 11.5


   ****************************
   *RESULTS OF LATEST ANALYSES*
   ****************************


    PROBLEM - NONE      TITLE - NONE GIVEN


    ACTIVE UNITS  FEET KIP  RAD  DEGF SEC


    INTERNAL MEMBER RESULTS
    -----------------------

     MEMBER FORCE ENVELOPE

-------------------------------------------------------------------------------------------------------------------------------
---      MEMBER  2                                                                                                          ---
-------------------------------------------------------------------------------------------------------------------------------
```

Code Reference

```
   DISTANCE         /------------------  FORCE  ------------------//-----------------  MOMENT  -----------------/
  FROM START              AXIAL         Y SHEAR         Z SHEAR         TORSION       Y BENDING       Z BENDING

    2.500               1.064582        55.64646                                                      314.3994
                           1029            1029                                                         1522
                      -0.7828730       -155.8126                                                     -522.0231
                           1021            2330                                                         1009

    7.000               1.064582        87.92229                                                      426.4992
                           1029            2036                                                         1520
                      -0.7828730       -87.92228                                                     -400.5730
                           1021            2328                                                         1029

   11.500               1.064582        155.8126                                                      301.1816
                           1029            2034                                                         1022
                      -0.7828730       -44.21778                                                     -650.9821
                           1021            1009                                                         1029


{   84} > LIST FORCE ENVELOPE MEMBER 3 SECTION NS 1 2.5


   ****************************
   *RESULTS OF LATEST ANALYSES*
   ****************************


    PROBLEM - NONE      TITLE - NONE GIVEN


    ACTIVE UNITS  FEET KIP  RAD  DEGF SEC


    INTERNAL MEMBER RESULTS
    -----------------------

     MEMBER FORCE ENVELOPE

-------------------------------------------------------------------------------------------------------------------------------------------
---      MEMBER  3                                                                                                                      ---
-------------------------------------------------------------------------------------------------------------------------------------------

   DISTANCE         /------------------  FORCE  ------------------//-----------------  MOMENT  -----------------/
  FROM START              AXIAL         Y SHEAR         Z SHEAR         TORSION       Y BENDING       Z BENDING
```

Code Reference

```
    2.500              0.1944455E-10   0.1574852E-11                                                0.7038116E-05
                           2037            1526                                                         2533
                       0.0000000E+00   -110.7000                                                    -484.3125
                           1010            1026                                                         1029


{   85} >
{   86} > $ COLUMN TOP AND BOTTOM RESULTS
{   87} > LIST FORCE ENVELOPE MEMBER 4 SECTION FRACTIONAL NS 2 1.0 0.0


   ****************************
   *RESULTS OF LATEST ANALYSES*
   ****************************


    PROBLEM - NONE      TITLE - NONE GIVEN


    ACTIVE UNITS  FEET KIP  RAD  DEGF SEC


    INTERNAL MEMBER RESULTS
    -----------------------

     MEMBER FORCE ENVELOPE

-------------------------------------------------------------------------------------------------------------------------------------------------
---      MEMBER  4                                                                                                                            ---
-------------------------------------------------------------------------------------------------------------------------------------------------

   DISTANCE         /-------------------  FORCE  -------------------//------------------  MOMENT  ------------------/
  FROM START              AXIAL         Y SHEAR         Z SHEAR         TORSION       Y BENDING       Z BENDING

    1.000  FR          55.64646       0.7828730                                                     59.30810
                           1029            1021                                                         1009
                      -347.5455       -1.064582                                                    -27.00405
                           2026            1029                                                         2539

    0.000               55.64646       0.7828730                                                     28.35656
                           1029            1021                                                         2026
                      -347.5455       -1.064582                                                    -53.63107
                           2026            1029                                                         1029
```

Code Reference

```
{   88} >
{   89} > $ RESULTS CORRESPONDING TO MIN/MAX VALUES
{   90} > $ Corresponding values not needed for cross beam
{   91} > $ COLUMN TOP AND BOTTOM RESULTS
{   92} > LOAD LIST 1009 1029 2026 2539
{   93} > LIST SECTION FORCES MEMBER 4 SECTION FRACTIONAL NS 2 1.0 0.0


   ***************************
   *RESULTS OF LATEST ANALYSES*
   ***************************


    PROBLEM - NONE      TITLE - NONE GIVEN


    ACTIVE UNITS  FEET KIP  RAD  DEGF SEC


    INTERNAL MEMBER RESULTS
    -----------------------

     MEMBER SECTION FORCES

-------------------------------------------------------------------------------------------------------------------------------------------
---      MEMBER  4                                                                                                                      ---
-------------------------------------------------------------------------------------------------------------------------------------------


         LOADING    1009        USERS TRUCK      FORWARD  PIVOT ON SECTION  0    MEMBER 1

   DISTANCE         /------------------  FORCE  ------------------//-----------------  MOMENT  -----------------/
  FROM START              AXIAL         Y SHEAR         Z SHEAR         TORSION       Y BENDING       Z BENDING

    1.000  FR          -265.6179      -0.8585348                                                     59.30810
    0.000              -265.6179      -0.8585348                                                     24.96671


         LOADING    1029        USERS TRUCK      FORWARD  PIVOT ON SECTION  0    MEMBER 3

   DISTANCE         /------------------  FORCE  ------------------//-----------------  MOMENT  -----------------/
  FROM START              AXIAL         Y SHEAR         Z SHEAR         TORSION       Y BENDING       Z BENDING

    1.000  FR           55.64647       -1.064582                                                    -11.04779
    0.000               55.64647       -1.064582                                                    -53.63107
```

Code Reference

```
      LOADING    2026        USERS TRUCK      FORWARD  PIVOT ON SECTION  0    MEMBER 1

 DISTANCE         /------------------  FORCE  ------------------//-----------------  MOMENT  -----------------/
FROM START              AXIAL         Y SHEAR         Z SHEAR         TORSION       Y BENDING       Z BENDING

  1.000  FR          -347.5455      -0.1425789                                                      34.05972
  0.000              -347.5455      -0.1425789                                                      28.35657


      LOADING    2539        USERS TRUCK      FORWARD  PIVOT ON SECTION  9    MEMBER 1

 DISTANCE         /------------------  FORCE  ------------------//-----------------  MOMENT  -----------------/
FROM START              AXIAL         Y SHEAR         Z SHEAR         TORSION       Y BENDING       Z BENDING

  1.000  FR          -86.08118      -0.2046868                                                     -27.00405
  0.000              -86.08118      -0.2046868                                                     -35.19152
```

Code Reference

Chapter 4 Seismic Design and Retrofit Contents

4.1 General 4.1-1

4.2 WSDOT Modifications to *AASHTO Guide Specifications for LRFD Seismic Bridge Design* 4.2-1

4.2.1 Definitions 4.2-1
4.2.2 Earthquake Resisting Systems (ERS) Requirements for SDCs C and D 4.2-1
4.2.3 Seismic Ground Shaking Hazard 4.2-5
4.2.4 Selection of Seismic Design Category (SDC) 4.2-5
4.2.5 Temporary and Staged Construction 4.2-5
4.2.6 Load and Resistance Factors 4.2-6
4.2.7 Balanced Stiffness Requirements and Balanced Frame Geometry Recommendation 4.2-6
4.2.8 Selection of Analysis Procedure to Determine Seismic Demand. 4.2-6
4.2.9 Design Requirements for Single-Span Bridges 4.2-6
4.2.10 Member Ductility Requirement for SDCs C and D 4.2-6
4.2.11 Plastic Hinging Forces 4.2-8
4.2.12 Minimum Support Length Requirements Seismic Design Category D 4.2-9
4.2.13 Longitudinal Restrainers 4.2-9
4.2.14 Abutments. 4.2-9
4.2.15 Foundation – General 4.2-9
4.2.16 Foundation – Spread Footing 4.2-9
4.2.17 Procedure 3: Nonlinear Time History Method 4.2-10
4.2.18 Figure 5.6.2-1 . . . . 4.2-10
4.2.19 I_{eff} for Box Girder Superstructure. 4.2-10
4.2.20 Foundation Rocking 4.2-10
4.2.21 Footing Joint Shear for SDCs C and D 4.2-10
4.2.22 Drilled Shafts 4.2-12
4.2.23 Longitudinal Direction Requirements 4.2-13
4.2.24 Liquefaction Design Requirements 4.2-13
4.2.25 Reinforcing Steel 4.2-13
4.2.26 Plastic Moment Capacity for Ductile Concrete Members for SDCs B, C, and D . 4.2-13
4.2.27 Shear Demand and Capacity for Ductile Concrete Members for SDCs B, C, and D 4.2-14
4.2.28 Concrete Shear Capacity 4.2-14
4.2.29 Shear Reinforcement Capacity 4.2-15
4.2.30 Interlocking Bar Size 4.2-15
4.2.31 Splicing of Longitudinal Reinforcement in Columns Subject to Ductility Demands for SDCs C and D. 4.2-15
4.2.32 Minimum Development Length of Reinforcing Steel for SDCs A and D 4.2-16
4.2.33 Requirements for Lateral Reinforcement for SDCs B, C, and D 4.2-16
4.2.34 Development Length for Column Bars Extended into Oversized Pile Shafts for SDCs C and D 4.2-16
4.2.35 Lateral Reinforcements for Columns Supported on Oversized Pile Shaft for SDCs C and D 4.2-16
4.2.36 Lateral Confinement for Oversized Pile Shaft for SDCs C and D 4.2-16
4.2.37 Lateral Confinement for Non-Oversized Strengthened Pile Shaft for SDCs C and D 4.2-16

4.2.38 Requirements for Capacity Protected Members 4.2-17
4.2.39 Superstructure Capacity Design for Integral Bent Caps for Longitudinal Direction for SDCs B, C, and D 4.2-18
4.2.40 Superstructure Capacity Design for Transverse Direction (Integral Bent Cap) for SDCs B, C, and D 4.2-18
4.2.41 Superstructure Design for Non-Integral Bent Caps for SDCs B, C, and D 4.2-18
4.2.42 Joint Proportioning 4.2-18
4.2.43 Minimum Joint Shear Reinfocing 4.2-20
4.2.44 Additional Longitudinal Cap Beam Reinforcement 4.2-21
4.2.45 Horizontal Isolated Flares 4.2-21
4.2.46 Column Shear Key Design for SDCs C and D 4.2-22
4.2.47 Cast-in-Place and Precast Concrete Piles 4.2-22

4.3 Seismic Design Requirements for Bridge Widening Projects 4.3-1
4.3.1 Seismic Analysis and Retrofit Policy 4.3-1
4.3.2 Design and Detailing Considerations 4.3-3

4.4 Seismic Retrofitting of Existing Bridges 4.4-1
4.4.1 General 4.4-1
4.4.2 Seismic Analysis Requirements 4.4-1
4.4.3 Seismic Retrofit Design 4.4-1
4.4.4 Computer Analysis Verification 4.4-1
4.4.5 Earthquake Restrainers 4.4-1

4.5 Seismic Design Requirements for Retaining Walls 4.5-1
4.5.1 General 4.5-1

4.99 References 4.99-1

Appendix 4-B1 Design Examples of Seismic Retrofits 4-B1-1
Appendix 4-B2 SAP2000 Seismic Analysis Example 4-B2-1

4.1 General

Seismic design of new bridges and bridge widenings shall conform to *AASHTO Guide Specifications for LRFD Seismic Bridge Design* as modified by Sections 4.2 and 4.3 of this manual. Analysis and design of seismic retrofits for existing bridges shall be completed in accordance with Section 4.4 of this manual. Seismic design of retaining walls shall be in accordance with Section 4.5 of this manual. For nonconventional bridges, bridges that are deemed critical or essential, or bridges that fall outside the scope of the Guide Specifications for any other reasons, project specific design requirements shall be developed and submitted to the WSDOT Bridge Design Engineer for approval.

The importance classifications for all highway bridges in Washington State are classified as "Normal" except for special major bridges. Special major bridges fitting the classifications of either "Critical" or "Essential" will be so designated by either the WSDOT Bridge and Structures Engineer or the WSDOT Bridge Design Engineer. The performance object for "Normal" bridges is live safety. Bridges designed in accordance with AASHTO Guide Specifications are intended to achieve the live safety performance goals.

4.2 WSDOT Modifications to *AASHTO Guide Specifications for LRFD Seismic Bridge Design*

WSDOT amendments to the *AASHTO Guide Specifications for LRFD Seismic Bridge Design* are as follows:

4.2.1 Definitions

Guide Specifications Article 2.1

Add the following definitions:

Oversized Pile Shaft- A drilled shaft that is at least 18 inches larger in diameter than the supported column, and which has its own reinforcing cage that is separate from that of the supported column.

Owner- Person or agency having jurisdiction over the bridge. For WSDOT projects, regardless of delivery method, the term "Owner" in these Guide Specifications shall be the WSDOT Bridge Design Engineer or/and the WSDOT Geotechnical Engineer.

4.2.2 Earthquake Resisting Systems (ERS) Requirements for SDCs C and D

Guide Specifications Article 3.3

WSDOT Global Seismic Design Strategies:

Type 1: Ductile Substructure with Essentially Elastic Superstructure. This category is permissible.

Type 2: Essentially Elastic Substructure with a Ductile Superstructure. This category is not permissible.

Type 3: Elastic Superstructure and Substructure with a Fusing Mechanism Between The Two. This category is permissible with WSDOT Bridge Design Engineer's approval.

If the columns or pier walls are designed for elastic forces, all other elements shall be designed for the lesser of the forces resulting from the overstrength plastic hinging moment capacity of columns or pier walls and the unreduced elastic seismic force in all SDCs. The minimum detailing according to the bridge seismic design category shall be provided. Shear design shall be based on 1.2 times elastic shear force and nominal material strengths shall be used for capacities. Limitations on the use of ERS & ERE are shown in Figures 3.3-1a, 3.3-1b, 3.3-2, and 3.3-3.

Figure 3.3-1b Type 6, connection with moment reducing detail should only be used at column base if proved necessary for foundation design. Fixed connection at base of column remains the preferred option for WSDOT bridges.

The design criteria for column base with moment reducing detail shall consider all applicable loads at service, strength, and extreme event limit states.

Figure 3.3-2 Types 6 and 8 are not Permissible for Non-liquefied configuration and Permissible with WSDOT Bridge Design Engineer's approval for liquefied configuration

For ERSs and EREs requiring approval, the WSDOT Bridge Design Engineer's approval is required regardless of contracting method (i.e. approval authority is not transferred to other entities).

1

Longitudinal Response

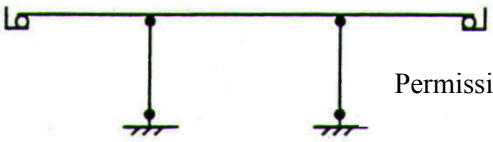

Permissible

- Plastic hinges in inspectable locations.
- Abutment resistance not required as part of ERS
- Knock-off backwalls permissible

2

Longitudinal Response

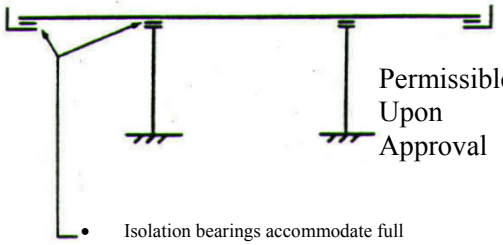

Permissible Upon Approval

- Isolation bearings accommodate full displacement
- Abutment not required as part of ERS

3

Transverse Response

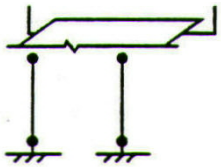

Permissible

- Plastic hinges in inspectable locations.
- Abutment not required in ERS, breakaway shear keys permissible with WSDOT Bridge Design Engineer's Approval

4

Transverse or Longitudinal Response

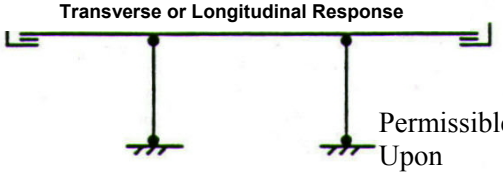

Permissible Upon Approval

- Plastic hinges in inspectable locations
- Isolation bearings with or without energy dissipaters to limit overall displacements

5

Transverse or Longitudinal Response



Permissible Upon Approval

- Abutment required to resist the design earthquake elastically
- Longitudinal passive soil pressure shall be less than 0.70 of the value obtained using the procedure given in Article 5.2.3

6

Longitudinal Response

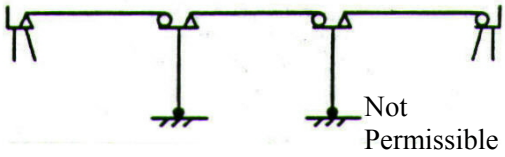

Not Permissible

- Multiple simply-supported spans with adequate support lengths
- Plastic hinges in inspectable locations.

Figure 3.3-1a Permissible Earthquake-Resisting Systems (ERSs)
BDM Figure 4.2.2-1

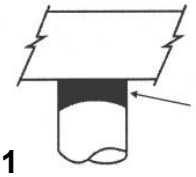

1

Permissible

Plastic hinges below cap beams including pile bents

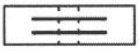

3

Seismic isolation bearings or bearings designed to accommodate expected seismic displacements with no damage

Permissible Upon Approval

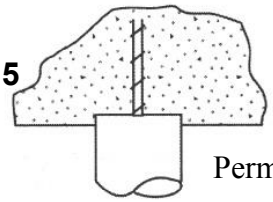

5

Piles with 'pinned-head' conditions

Permissible Upon Approval

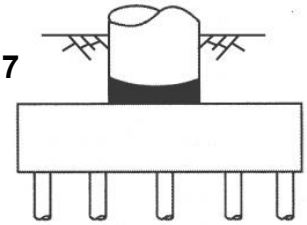

7

Capacity-protected pile caps, including caps with battered piles, which behave elastically

Permissible except battered piles are not allowed

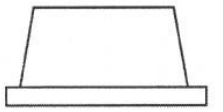

9

Pier walls with or without piles.

Permissible



11

Passive abutment resistance required as part of ERS
Use 70% of passive soil strength designated in Article 5.2.3

Permissible Upon Approval

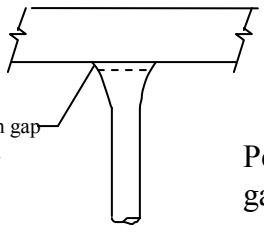

13

isolation gap optional

Columns with architectural flares – with or without an isolation gap

See Article 8.14

Permissible – isolation gap is required

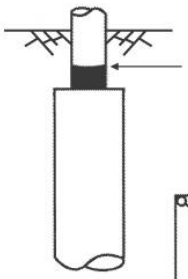

2

Above ground / near ground plastic hinges

Permissible

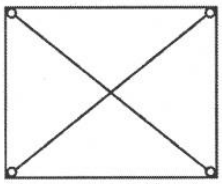

4

Tensile yielding and inelastic compression buckling of ductile concentrically braced frames

Not Permissible

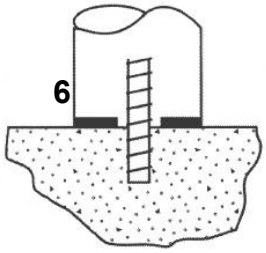

6

Permissible Upon Approval

Columns with moment reducing or pinned hinge details

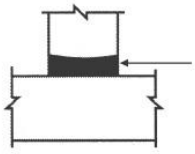

8

Plastic hinges at base of wall piers in weak direction

Permissible

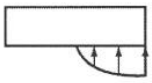

10

Spread footings that satisfy the overturning criteria of Article 6.3.4

Permissible

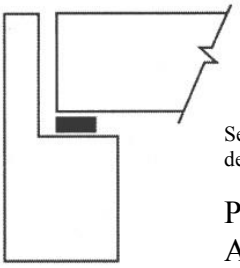

12

Seat abutments whose backwall is designed to fuse

Permissible Upon Approval

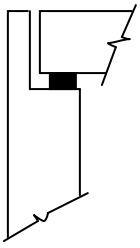

14

Seat abutments whose backwall is designed to resist the expected impact force in an essentially elastic manner

Permissible

Figure 3.3-1b Permissible Earthquake-Resisting Elements (EREs)
BDM Figure 4.2.2-2

1



Passive abutment resistance required as part of ERS Passive Strength
Use 100% of strength designated in Article 5.2.3

Permissible Upon Approval

2

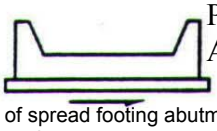

Permissible Upon Approval

Sliding of spread footing abutment allowed to limit force transferred

Limit movement to adjacent bent displacement capacity

3

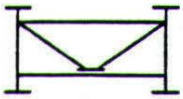

Ductile End-diaphragms in superstructure (Article 7.4.6)

Not Permissible

4

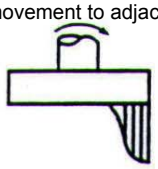

Not Permissible

Foundations permitted to rock

Use rocking criteria according to Appendix A

5

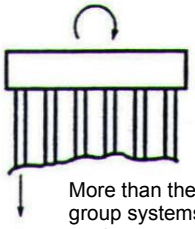

Not Permissible

More than the outer line of piles in group systems allowed to plunge or uplift under seismic loadings

6

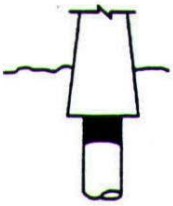

Wall piers on pile foundations that are not strong enough to force plastic hinging into the wall, and are not designed for the Design Earthquake elastic forces

Ensure Limited Ductility Response in Piles according to Article 4.7.1

Permissible Upon Approval for Liquefied Configuration

7

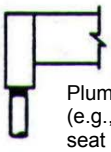

Not Permissible

Plumb piles that are not capacity-protected (e.g., integral abutment piles or pile-supported seat abutments that are not fused transversely)

Ensure Limited Ductility Response in Piles

8

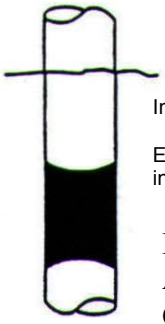

In-ground hinging in shafts or piles.

Ensure Limited Ductility Response in Piles according to Article 4.7.1

Permissible Upon Approval for Liquefied Configuration

9



Not Permissible

Batter pile systems in which the geotechnical capacities and/or in-ground hinging define the plastic mechanisms.

Ensure Limited Ductility Response in Piles according to Article 4.7.1

Figure 3.3-2 Permissible Earthquake-Resisting Elements that Require Owner's Approval
BDM Figure 4.2.2-3

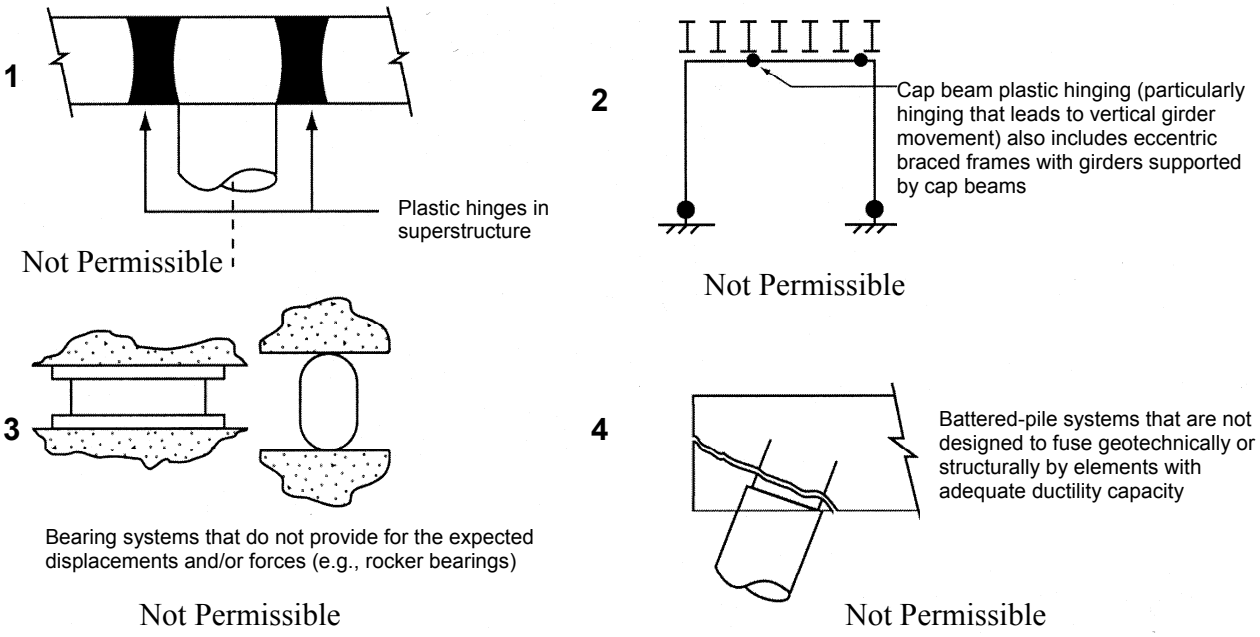

Figure 3.3-3 Earthquake-Resisting Elements that Are Not Recommended for New Bridges
BDM Figure 4.2.2-4

4.2.3 Seismic Ground Shaking Hazard

Guide Specifications Article 3.4

For bridges that are considered critical or essential or normal bridges with a site class F, the seismic ground shaking hazard shall be determined based on the WSDOT Geotechnical Engineer recommendations.

4.2.4 Selection of Seismic Design Category (SDC)

Guide Specifications Article 3.5

Pushover analysis shall be used to determine displacement capacity for both SDCs C and D.

4.2.5 Temporary and Staged Construction

Guide Specifications Article 3.6

For bridges that are designed for a reduced seismic demand, the contract plans shall include a statement that clearly indicates that the bridge was designed as temporary using a reduced seismic demand.

4.2.6 Load and Resistance Factors

Guide Specifications Article 3.7

Revise as follows:

- The load factor for live load shall be 0.0 when pushover analysis is used to determine the displacement capacity. Use live load factor of 0.5 for all other extreme event cases.

Guide Specifications Article C3.7

Add the following paragraph:

Vehicular live loads have not been observed to be in-phase with the bridge structure during seismic events. Thus, the inertial effect of actual live loads on typical bridges is assumed to be negligible in the dynamic demand analysis and pushover capacity analysis for normal bridges in SDCs C and D. For critical/essential bridges, the live load factor shall be determined on a project-specific basis.

4.2.7 Balanced Stiffness Requirements and Balanced Frame Geometry Recommendation

Guide Specifications Articles 4.1.2 and 4.1

Balanced stiffness and balanced frame geometry are required for bridges in both SDCs C and D. Deviations from balanced stiffness and balanced frame geometry requirements require approval from the WSDOT Bridge Design Engineer.

4.2.8 Selection of Analysis Procedure to Determine Seismic Demand

Guide Specifications Article 4.2

Analysis Procedures:

- Procedure 1 (Equivalent Static Analysis) shall not be used.
- Procedure 2 (Elastic Dynamic Analysis) shall be used for all "regular" bridges with two through six spans and "not regular" bridges with two or more spans in SDCs B, C, or D.
- Procedure 3 (Nonlinear Time History) shall only be used with WSDOT Bridge Design Engineer's approval.

4.2.9 Design Requirements for Single-Span Bridges

Guide Specifications Article 4.5

Revise second sentence as follows:

However, the connections between the superstructure and substructure shall be designed to resist a horizontal seismic force not less than the acceleration coefficient, A_s, as specified in Article 3.4, times the tributary permanent load in the restrained direction, except as modified for SDC A in Article 4.6.

4.2.10 Member Ductility Requirement for SDCs C and D

Guide Specifications Article 4.9

In-ground hinging for drilled shaft and pile foundations may be considered for the liquefied configuration with WSDOT Bridge Design Engineer approval.

Guide Specifications Article C4.9

Add the following paragraph:

The member ductility demand may be determined by M-ϕ analysis (see Figure 1) and the following equations:

$$\Delta_{yi} = \frac{\phi_{yi} L^2}{3} \quad \text{(C4.9-1)}$$

$$\Delta_{pd} = (\phi_{col} - \phi_{yi}) L_p (L - 0.5 L_p) \quad \text{(C4.9-2)}$$

$$\mu_D = 1 + \frac{\Delta_{pd}}{\Delta_{yi}} \quad \text{(C4.9-3)}$$

$$\mu_D = 1 + 3\left(\frac{\phi_{col}}{\phi_{yi}} - 1\right)\frac{L_p}{L}\left(1 - 0.5\frac{L_p}{L}\right) \quad \text{(C4.9-4)}$$

Where:

ϕ_{col} = Column curvature demand from "pushover" analysis
ϕ_{yi} = Idealized yield curvature from bilinearization described in Article 8.5
L_p = Equivalent analytical plastic hinge length in inches as defined in Article 4.11.6
L = Length of column from point of maximum moment to the point of moment contraflexure (in.)

Note that a column with two plastic hinges will have two values of ductility demand, μ_D. The larger value controls and must compared against the limits given in Equations 1-6.

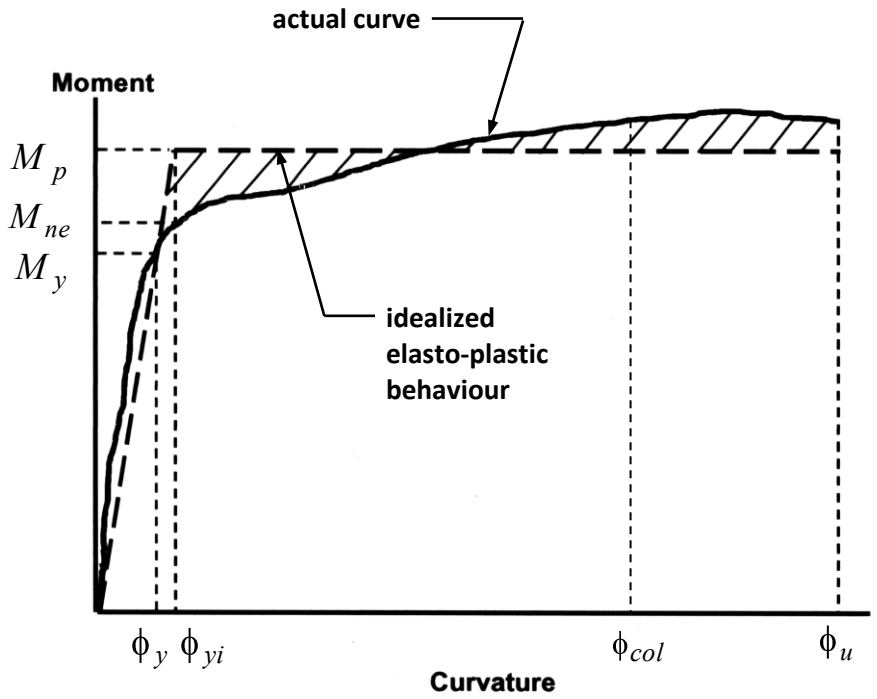

Figure C 4.9-1 Moment-Curvature Diagram
BDM Figure 4.2.10-1

4.2.11 Plastic Hinging Forces

Guide Specifications Article 4.11.2

Revise Figure 4.11.2-1 as follows:

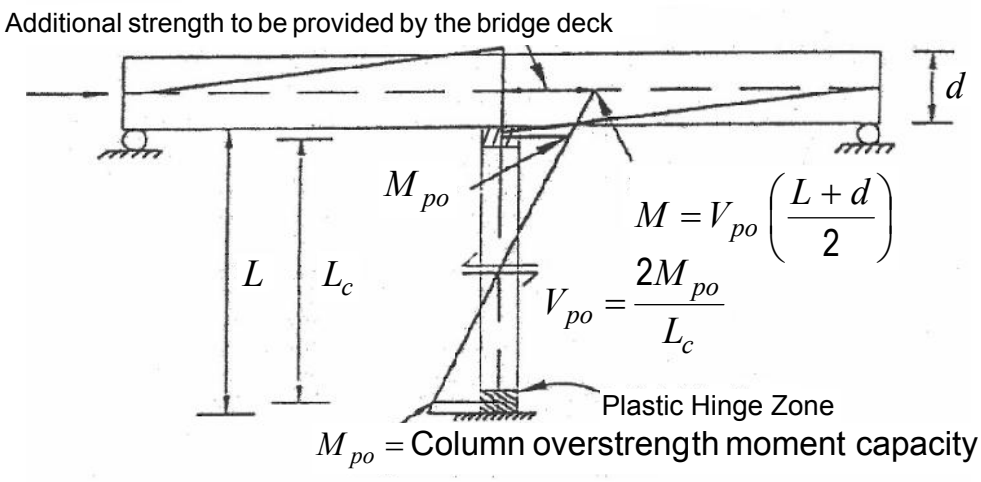

(a) Longitudinal Response for Nonintegral Abutments

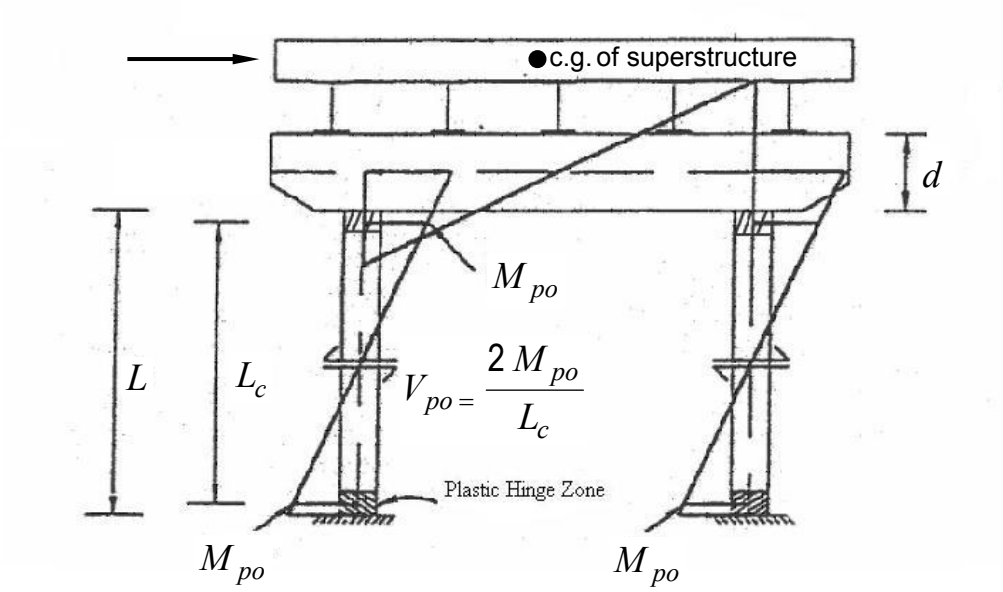

(b) Transverse Response for Dual Column Pier

Figure 4.11.2-1 Capacity Design of Bridges Using Overstrength Concepts
BDM Figure 4.2.11-1

4.2.12 Minimum Support Length Requirements Seismic Design Category D

Guide Specifications Article 4.12.3

Add the following paragraph:

For single-span bridges in SDC D, the support length shall be 150% of the empirical support length, N, specified by Guide Specifications Equation 4.12.2-1.

4.2.13 Longitudinal Restrainers

Guide Specifications Article 4.13.1

Longitudinal restrainers shall be provided at the expansion joints between superstructure segments. Restrainers shall be designed in accordance with the FHWA *Seismic Retrofitting Manual for Highway Structure* (FHWA-HRT-06-032) Article 8.4 The Iterative Method. See the earthquake restrainer design example in the Appendix of this chapter. Restrainers shall be detailed in accordance with the requirements of Guide Specifications Article 4.13.3 and Section 4.4.5 of this manual. Restrainers may be omitted for SDCs C and D where the available seat width exceeds the calculated support length specified in Eq. 1 below (using 2 times seismic displacement instead of 1.65 as required in Eq. 4.12.3-1).

$$N = \left(4 + \mathbf{2.0}\Delta_{eq}\right)\left(1 + 0.00025S^2\right) \geq 24\ in. \qquad (4.2.13\text{-}1)$$

Omitting restrainers for liquefiable sites shall be approved by the WSDOT Bridge Design Engineer.

Longitudinal restrainers shall not be used at the end piers (abutments).

4.2.14 Abutments

Guide Specifications Article 5.2

Diaphragm Abutment type shown in Figure 5.2.3.2-1 shall not be used for WSDOT bridges.

With WSDOT Bridge Design Engineer approval, the abutment may be considered and designed as part of earthquake resisting system (ERS) in the longitudinal direction of a straight bridge with little or no skew and with a continuous deck. For determining seismic demand, longitudinal passive soil pressure shall not exceed 50% of the value obtained using the procedure given in Article 5.2.3.3.

Participation of the wingwall in the transverse direction shall not be considered in the seismic design of bridges.

4.2.15 Foundation – General

Guide Specifications Article 5.3.1

The required foundation modeling method (FMM) and the requirements for estimation of foundation springs for spread footings, pile foundations, and drilled shafts shall be based on the WSDOT Geotechnical Engineer's recommendations.

4.2.16 Foundation – Spread Footing

Guide Specifications Article C5.3.2

Foundation springs for spread footings shall be determined in accordance with Section 7.2.7 of this manual, WSDOT *Geotechnical Design Manual* Section 6.5.1.1 and the WSDOT Geotechnical Engineer's recommendations.

4.2.17 Procedure 3: Nonlinear Time History Method

Guide Specifications Article 5.4.4

The time histories of input acceleration used to describe the earthquake loads shall be selected in consultation with the WSDOT Geotechnical Engineer and the WSDOT Bridge Design Engineer.

4.2.18 Figure 5.6.2-1

Guide Specifications Article 5.6.2

The horizontal axis label of Figure 5.6.2-1 for both (a) Circular Sections and (b) Rectangular Sections shall be Axial Load Ratio:

$$\frac{P}{f'_{ce}A_g} \tag{4.2.18-1}$$

4.2.19 I_{eff} for Box Girder Superstructure

Guide Specifications Article 5.6.3

Gross moment of inertia shall be used for box girder superstructure modeling.

4.2.20 Foundation Rocking

Guide Specifications Article 6.3.9

Foundation rocking shall not be used for the design of WSDOT bridges.

4.2.21 Footing Joint Shear for SDCs C and D

Guide Specifications Article 6.4.5

Revise B_c unit as follows:

B_c = diameter or width of column or wall measured normal to the direction of loading (in.)

Delete the last paragraph. "Transverse joint reinforcement shall be provided in accordance with Article 8.8.8."

Add the following Articles:

- 6.4.7 Joint Shear Reinforcement

  Principal compression stress shall not exceed the limit specified in Article 6.4.5. If the principal tension stress in the joint, p_t, as specified in Article 6.4.5 is less than $0.11\sqrt{f'_c}$, the transverse reinforcement ratio in the joint, ρ_s, shall satisfy Eq. (8.13.3-1) and no additional reinforcement within the joint is required.

  Where the principal tension stress in the joint, p_t, is greater than $0.11\sqrt{f'_c}$, then transverse reinforcement ratio in the joint, ρ_s, shall satisfy Eq. (8.13.3-2) and additional joint reinforcement is required as specified in Articles 6.4.8 and 6.4.9.

  For columns with interlocking cores, the transverse reinforcement ratio, ρ_s shall be based on the total area of reinforcement of each core.

- 6.4.8 Vertical Joint Shear Reinforcement

  Vertical joint reinforcement is required in the region that extends horizontally from the face of column to a distance of 0.5 D_c away from the face of column, which has a total area as defined by Eq.1. The vertical joint reinforcement shall be evenly distributed around the column, within the region identified above and Figure 1.

$$A_s^{jv} \geq 0.80 A_{st} \qquad (6.4.8\text{-}1)$$

  Where:

  A_s^{jv} = Total area of vertical joint reinforcement required (in.^{2})
  A_{st} = Total area of column reinforcement anchored in the joint (in.^{2})

  Reinforcing bars making up the vertical joint reinforcement, A_s^{jv}, shall be no larger than #5 bars to allow for the top hook to be field bend after placement from the 90° to a 135° as shown in Figure 6.4.9-1.

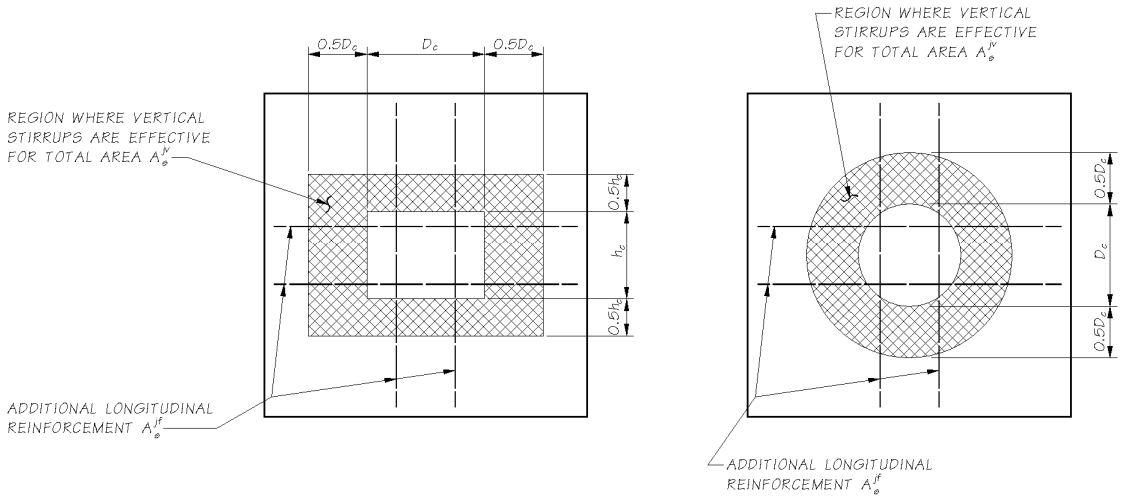

Figure 6.4.8-1 Vertical Joint Shear Reinforcement Region
BDM Figure 4.2.21-1

- Add C.6.4.8

  Contractors (and designers, as a matter of habit) prefer to provide anchorage for column longitudinal reinforcement by bending its tails outward, thus making stable platform for supporting the column cage and prevent congestion. However, if this is done, any force transferred to the bend is directed away from the joint and increase diagonal tension stress within the joint region. From a joint performance viewpoint, it is desirable to bend the column bar inward toward the joint, but this will cause undue congestion. If only X% of the column bars are bent outward, with the remainder bent into the core, the reinforcement area given by Eq. 1 may be reduced proportionately.

- 6.4.9 Horizontal Joint Shear Reinforcement

Additional horizontal reinforcement in the footing of the total amount, A_s^{jf}, shall be provided in addition to that required to resist other loads. The additional area of reinforcement shall be placed in the top of the footing extending through the joint and for a sufficient distance to develop its yield strength at a distance beyond 0.5 D_c from the column face, as shown in Figure 1. The additional area of the horizontal steel shall satisfy:

$$A_s^{jf} \geq 0.09 A_{st} \qquad (6.4.9\text{-}1)$$

where:

A_s^{jf} = Total area of vertical joint reinforcement required (in.^{2})
A_{st} = Total area of column reinforcement anchored in the joint (in.^{2})

Since the column to footing connection resists moments from seismic forces acting both parallel and transverse to the longitudinal axis of the bridge, the additional horizontal reinforcement is required in both directions. Reinforcement may be hooked if straight bar development is unattainable.

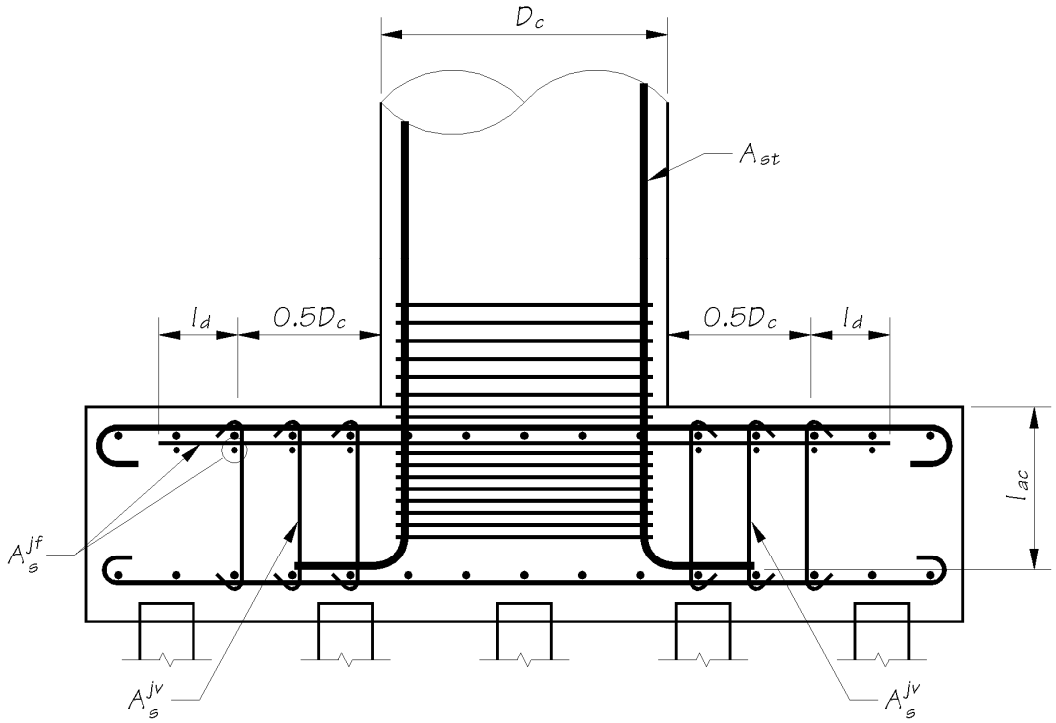

Figure 6.4.9-1 Footing Joint Shear Reinforcement
BDM Figure 4.2.21-2

4.2.22 Drilled Shafts

Guide Specifications Article C6.5

The scale factor for p-y curves for large diameter shafts shall not be used for WSDOT bridges unless approved by WSDOT Geotechnical Engineer and WSDOT Bridge Design Engineer.

4.2.23 Longitudinal Direction Requirements

Guide Specifications Article 6.7.1

Case 2: Earthquake Resisting System (ERS) with abutment contribution may be used provided that the mobilized longitudinal passive pressure is not greater than 50% of the value obtained using procedure given in Article 5.2.3.3.

4.2.24 Liquefaction Design Requirements

Guide Specifications Article 6.8

Soil liquefaction assessment shall be based on the WSDOT Geotechnical Engineer's recommendation and WSDOT *Geotechnical Design Manual* Section 6.4.2.8.

4.2.25 Reinforcing Steel

Guide Specifications Article 8.4.1

Only ASTM A 706 reinforcing steel shall be used. ASTM A 615 reinforcement shall not be used in WSDOT bridges.

Deformed welded wire fabric may be used with the WSDOT Bridge Design Engineer's approval.

Wire rope or strands for spirals, and high strength bars with yield strength in excess of 75 ksi shall not be used.

4.2.26 Plastic Moment Capacity for Ductile Concrete Members for SDCs B, C, and D

Guide Specifications Article 8.5

Revise Figure 8.5-1 as follows:

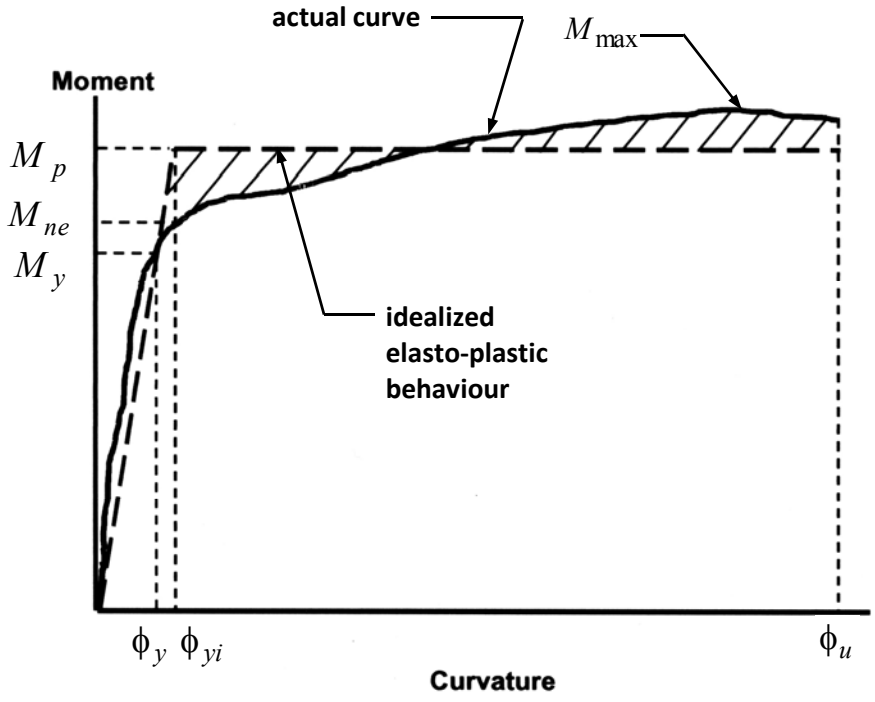

Figure 8.5-1 Moment-Curvature Model
BDM Figure 4.2.26-1

Revise Equation 8.5-1 as follows:

$$M_{po} = \lambda_{mo} M_p \geq M_{max} \quad (8.5\text{-}1)$$

Where:

M_{max} = Ultimate Moment capacity of column (kip-ft)

Revise the third paragraph as follows:

The expected nominal moment capacity, M_{ne}, for capacity protected concrete components that are connected to the plastic hinge locations shall be based on the expected concrete and reinforcing steel strengths when either the concrete strain reaches a magnitude of 0.003 or the reinforcing steel strain reaches ⅔ ε_{su}^{R}, with ε_{su}^{R} as defined in Table 8.4.2-1. For SDC B, the expected nominal moment capacity, M_{ne}, may be used as M_p in lieu of development of a moment-curvature analysis.

Guide Specifications Article C8.5

Add the following paragraph:

The design engineer should use the minimum column section and reinforcing steel that meets the project constraints and satisfies the requirements of the design codes/specifications. The design engineer must keep in mind that using a larger column than necessary can greatly increase the size and cost of the connecting elements (foundations, cap beams, etc.). The design engineer should be actively involved in the aesthetic selection process to encourage the use of economical members.

4.2.27 Shear Demand and Capacity for Ductile Concrete Members for SDCs B, C, and D

Guide Specifications Article 8.6.1

Add the following paragraphs:

The shear demand for the non-oversized pile shafts shall be taken as the larger of either the force reported in the soil/pile shaft interaction analysis when the in-ground hinges form or the shear calculated by dividing the overstrength moment capacity of the pile shaft by the length H_s. H_s shall be taken as the smaller of:

- $H' + 2D_c$
- Length of the column/pile shaft from the point of maximum moment in the pile shaft to the point of contraflexural in the column.

Where:

H' = Length of the pile shaft/column from the ground surface to the point of zero moment above ground

D_c = Diameter of pile shaft

The shear reinforcement outside of the plastic hinge region need not exceed the required shear reinforcement inside the plastic hinge region.

4.2.28 Concrete Shear Capacity

Guide Specifications Article 8.6.2

Revise the definition as follows:

D' = Diameter of core section for each individual circular core of column measured between the centerline of the hoop or spiral (in.).

4.2.29 Shear Reinforcement Capacity

Guide Specifications Article C8.6.

Add the following paragraph:

Horizontal cross-ties connecting the spirals or hoops should be provided between the interlocking spirals or hoops as shown in the revised Figure C3 below (Correal et al., 2004). Cross-ties having the same bar size as the spiral or hoop reinforcement shall be used. The ties shall be spaced vertically at two times the pitch/spacing of the spirals/hoops. Cross-ties shall have 135° hooks at one end and 90° hooks at the other end as specified in Article 8.8.9 (alternate 135° hook every other tie bar). The hooks shall engage peripheral longitudinal bars.

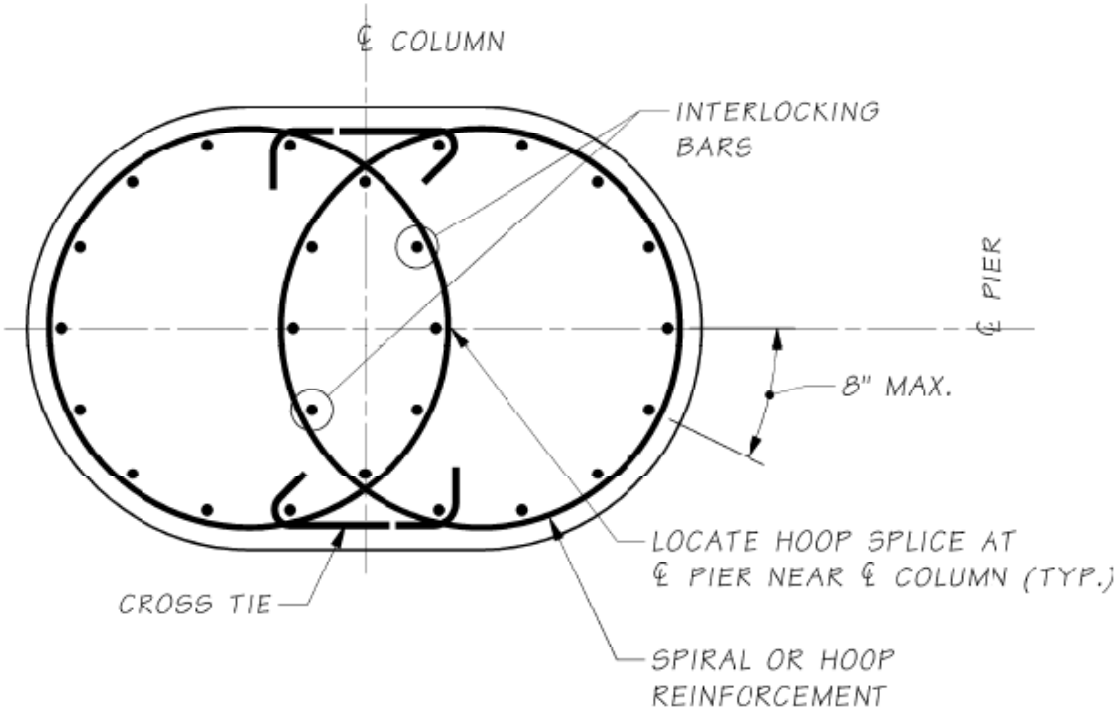

Figure C8.6.3-3 Column Interlocking Spiral and Hoop Details
BDM Figure 4.2.29-1

4.2.30 Interlocking Bar Size

Guide Specifications Article 8.6.7

The longitudinal reinforcing bar inside the interlocking portion of column (interlocking bars) shall be the same size of bars used outside the interlocking portion.

4.2.31 Splicing of Longitudinal Reinforcement in Columns Subject to Ductility Demands for SDCs C and D

Guide Specifications Article 8.8.3

The splicing of longitudinal column reinforcement outside the plastic hinging region shall be accomplished using mechanical couplers that are capable of developing a minimum tensile strength of 85 ksi. Splices shall be staggered at least 2 feet. Lap splices shall not be used. The design engineer shall clearly identify the locations where splices in longitudinal column reinforcement are permitted on the plans. In general, where the length of the rebar cage is less than 60 feet (72 feet for #14 and #18 bars), no splice in longitudinal reinforcements shall be allowed.

4.2.32 Minimum Development Length of Reinforcing Steel for SDCs A and D

Guide Specifications Article 8.8.4

Add C8.8.4:

The longitudinal reinforcing bar should also meet the longitudinal development requirements in the AASHTO *LRFD Bridge Design Specifications* for all load cases other than seismic loads. Column longitudinal bars shall be extended into the cap beam and footing as close as practically possible to the opposite face of the cap beam or footing even though the develop length required in Eq.1 and the AASHTO Specifications may be met with a shorter anchorage length. In the case of prestressed girder structures with integral cap beams, the longitudinal reinforcement shall be extended as close as possible to the top of the stage 1 cap beam. The additional length is required to develop favorable bond-strut angles in the column-cap beam and column-footing joint. Eq.1 should be used to limit the reinforcing bar size for a given bridge joint geometry.

4.2.33 Requirements for Lateral Reinforcement for SDCs B, C, and D

Guide Specifications Article 8.8.9

Add the following paragraphs:

For members that are reinforced with single circular hoops, the hoop weld splices shall be staggered around the column by a minimum distance of ⅓ of the hoop circumference.

For members that are reinforced with interlocking hoops, the hoop weld splices shall be placed at centerline of pier near centerline of column.

4.2.34 Development Length for Column Bars Extended into Oversized Pile Shafts for SDCs C and D

Guide Specifications Article 8.8.10

Extending column bars into oversized shaft shall be per Section 7.4.4.C of this manual, based on TRAC Report WA-RD 417.1 "Non Contact Lap Splice in Bridge Column-Shaft Connections."

4.2.35 Lateral Reinforcements for Columns Supported on Oversized Pile Shaft for SDCs C and D

Guide Specifications Article 8.8.11

Add C8.8.11:

The spacing of hoops or pitch of spirals of the column cage may be doubled along the entire embedded length of the column cage into the shaft.

4.2.36 Lateral Confinement for Oversized Pile Shaft for SDCs C and D

Guide Specifications Article 8.8.12

The requirement of this article for shaft lateral reinforcement in the column-shaft splice zone may be replaced with Section 7.8.2 K of this manual.

4.2.37 Lateral Confinement for Non-Oversized Strengthened Pile Shaft for SDCs C and D

Guide Specifications Article 8.8.13

Non-oversized column-shaft is not permissible unless approved by the WSDOT Bridge Design Engineer.

4.2.38 Requirements for Capacity Protected Members

Guide Specifications Article 8.9

Add the following paragraphs:

For SDCs C and D where liquefaction is identified, with the WSDOT Bridge Design Engineer's approval, pile and drilled shaft in-ground hinging may be considered as an ERE. Where in-ground hinging is part of ERS, the confined concrete core should be limited to a maximum compressive strain of 0.008 and the member ductility demand shall be limited to 4.

Bridges shall be analyzed and designed for the nonliquefied condition and the liquefied condition in accordance with Article 6.8. The capacity protected members shall be designed in accordance with the requirements of Article 4.11. To ensure the formation of plastic hinges in columns, oversized pile shafts shall be designed for an expected nominal moment capacity, M_{ne}, at any location along the shaft, that is, equal to 1.25 times moment demand generated by the overstrength column plastic hinge moment and associated shear force at the base of the column. The safety factor of 1.25 may be reduced to 1.0 depending on the soil properties and upon the WSDOT Bridge Design Engineer's approval.

The design moments below ground for extended pile shaft may be determined using the Nonlinear Static Procedure (pushover analysis) by pushing them laterally to the displacement demand obtained from an elastic response spectrum analysis. The point of maximum moment shall be identified based on the moment diagram. The expected plastic hinge zone shall extend 3D above and below the point of maximum moment. The plastic hinge zone shall be designated as the "No-splice" zone and the transverse steel for shear and confinement shall be provided accordingly.

Guide Specifications Article C8.9

Add the following paragraphs:

Oversized pile shafts are designed so the plastic hinge will form at or above the shaft/column interface, thereby, containing the majority of inelastic action to the ductile column element. Therefore, oversized pile shafts should be designed to remain elastic.

The moment along a pile shaft is dependent upon the geotechnical properties of the surrounding soil and the stiffness of the shaft. To ensure the formation of plastic hinges in columns and to minimize the damage to oversized pile shafts, a factor of 1.25 is used in the design of oversized pile shafts. This factor also accommodates the uncertainty associated with estimates on soil properties and stiffness.

Extended pile shafts (same sized column shaft) are designed so the plastic hinges will form below ground in the pile shaft. The concrete cover, area of transverse and longitudinal reinforcement may change between the column and the pile shaft, but the cross section of the confined core is the same for both the column and the pile shaft. The extended pile shafts shall not be used in the WSDOT projects without the WSDOT Bridge Design Engineer's approval. The ductility demand for the pile shaft shall be less than the ductility demand for the column supported by the shaft.

To avoid the plastic hinge forming below ground, the pile shaft may be strengthened and shall be designed for a expected nominal moment capacity equal to 1.25 times the moment demand generated by the overstrength moment of supported column.

4.2.39 Superstructure Capacity Design for Integral Bent Caps for Longitudinal Direction for SDCs B, C, and D

Guide Specifications Article 8.10

Add the following paragraph:

For precast prestressed girder bridges, two-thirds of the column plastic hinging moment at the c.g. of the superstructure shall be resisted by girders within the effective width, and the remaining one-third by girders outside the effective width. See Section 5.1.3.D.4 of this manual for additional details.

4.2.40 Superstructure Capacity Design for Transverse Direction (Integral Bent Cap) for SDCs B, C, and D

Guide Specifications Article 8.121

Revise the last paragraph as follows:

For SDCs C and D, the longitudinal flexural bent cap beam reinforcement shall be continuous. Splicing of cap beam longitudinal flexural reinforcement shall be accomplished using mechanical couplers that are capable of developing a minimum tensile strength of 85 ksi. Splices shall be staggered at least 2 feet. Lap splices shall not be used.

4.2.41 Superstructure Design for Non-Integral Bent Caps for SDCs B, C, and D

Guide Specifications Article 8.12

Non-Integral Bent Caps shall not be used for continuous concrete bridges in SDC B, C, and D except at the expansion joints between superstructure segments.

4.2.42 Joint Proportioning

Guide Specifications Article 8.13.2

Revise Article 8.13.2 as follows:

Moment-resisting joints shall be proportioned so that the principal stresses satisfy the requirements of Eq. 1 and Eq. 2

- For principal compression, p_c:

$$p_c \leq 0.25 f'_c \tag{8.13.2-1}$$

- For principal tension, p_t:

$$p_t \leq 0.38\sqrt{f'_c} \tag{8.13.2-2}$$

In which:

$$p_t = \left(\frac{f_h + f_v}{2}\right) - \sqrt{\left(\frac{f_h - f_v}{2}\right)^2 + v_{jh}^2} \tag{8.13.2-3}$$

$$p_c = \left(\frac{f_h + f_v}{2}\right) + \sqrt{\left(\frac{f_h - f_v}{2}\right)^2 + v_{jh}^2} \tag{8.13.2-4}$$

Where:

f_h = Average axial horizontal stress (ksi)
f_v = Average axial vertical stress (ksi)
v_{jh} = Average joint shear stress (ksi)

The horizontal axial stress is based on the mean axial force at the center of joint.

$$f_h = \frac{P_b}{B_{cap} D_s} \quad (8.13.2\text{-}5)$$

Where:

P_b = Beam axial force at the center of the joint including the effects of prestressing and the shear associated with plastic hinging (kips)
B_{cap} = Bent cap width (in.)
D_s = Depth of superstructure at the bent cap for integral joints under longitudinal response and depth of cap beam for nonintegral bent caps and integral joint under transverse response (in.)

For most projects, f_h can typically be ignored since there is typically no prestress in the cap.

In the vertical direction, the average axial stress in the joint is provided by the axial force in the column. Assuming a 45° spread away from the boundary of the column to a plane at mid-depth of the bent cap, the average axial stress is calculated by the following equation:

$$f_v = \frac{P_c}{(D_c + D_b) B_{cap}} \quad (8.13.2\text{-}6)$$

Where:

P_c = Column axial force including the effects of overturning (kips)
B_{cap} = Bent cap width (in.)
D_c = Diameter or cross-sectional dimension of column parallel to bent cap (in.)
D_b = Depth of bent cap (in.)

Eq.1 shall be modified if the cap beam does not extend beyond the column exterior face greater than the bent cap depth.

The average joint shear stress, v_{jh}, can be approximated with the following equation:

$$v_{jh} = \frac{M}{h_b D_c B_{eff}} \quad (8.13.2\text{-}7)$$

Where:

M = The column overstrength moment, M_{po}, in addition to the moment induced due to eccentricity between the column plastic hinge location and the c.g. of bottom longitudinal reinforcement of the cap beam or superstructure (kip-in.)
D_c = Diameter or cross-sectional dimension of column in the direction of loading (in.)
h_b = The distance from c.g. of tensile force to c.g. of compressive force on the section (in.). This level arm may be approximated by D_s.
B_{eff} = Effective width of joint (in.)

The effective width of joint, B_{eff}, depends on the shape of the column framing into the joint and is determined using the following equations.

- For circular columns:

$$B_{eff} = \sqrt{2}\, D_c \quad (8.13.2\text{-}8)$$

- For rectangular columns:

$$B_{eff} = B_c + D_c \quad (8.13.2\text{-}9)$$

For transverse response, the effective width will be the smaller of the value given by the above equations or the cap beam width. Figure 8.13.2-1 clarifies the quantities to be used in this calculation.

Where:

B_c = Diameter or width of column or wall measured normal to the direction of loading (in.)

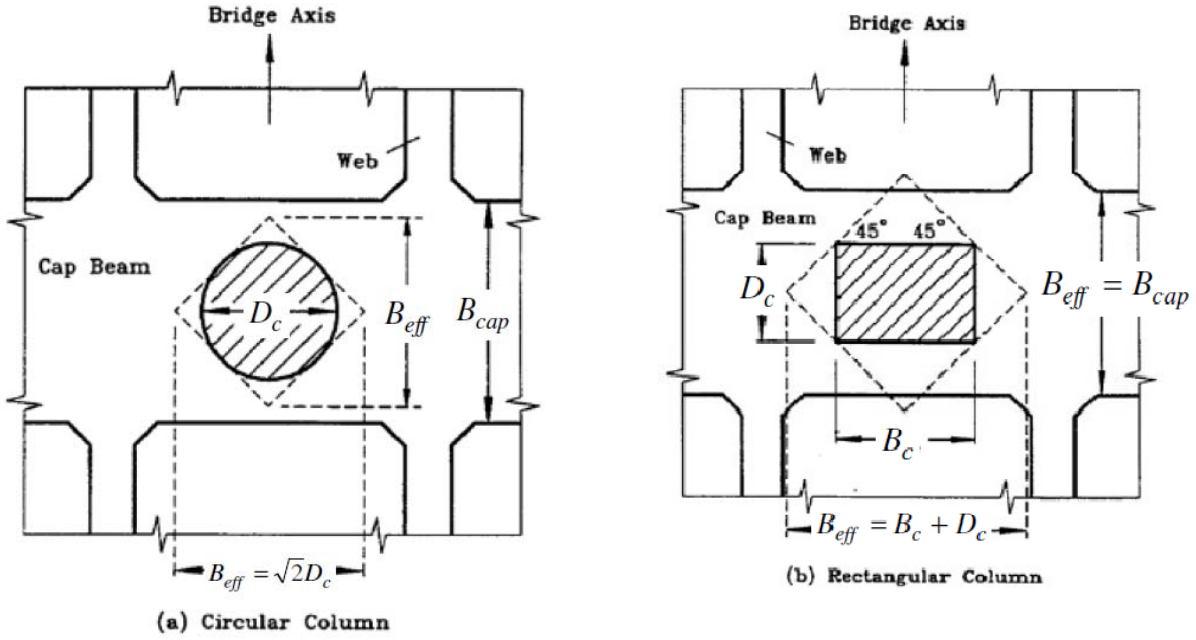

Figure 8.13.2-1 Effective Joint Width for Shear Stress Calculation
BDM Figure 4.2.42-1

4.2.43 Minimum Joint Shear Reinfocing

Guide Specifications Article 8.13.3

Add commentary C8.13.3 as follows:

Additional joint reinforcements specified in Article 8.13.4.2 for integral bent cap and Article 8.13.5.1 for nonintegral bent cap are based on the tests by Priestley (1996) and Sritharan (2005) for certain standard joints as shown in Figure C8.13.1-1 and Figure 8.13.4.2-1-2 using the external strut force transfer method. The joint reinforcements shall be placed within a distance of 0.5 D_c from the column surface. Consequently, these specifications are only applicable to the joints that closely match the geometry of test joints as detailed in Figures 8.13.4.2-1-1 to 3 and Figures 8.13.5.1.1-1 to 2. Bent cap beams not satisfying these joint geometry and detail requirements shall be designed based upon the strut and tie provisions of the *AASHTO LRFD Bridge Design Specifications*.

4.2.44 Additional Longitudinal Cap Beam Reinforcement

Guide Specifications Article 8.13.5.1.3

Add the following:

This reinforcement shall extend a sufficient distance to develop its yield strength at a distance of $0.5D_c$ from the column face as shown in Figure 1.

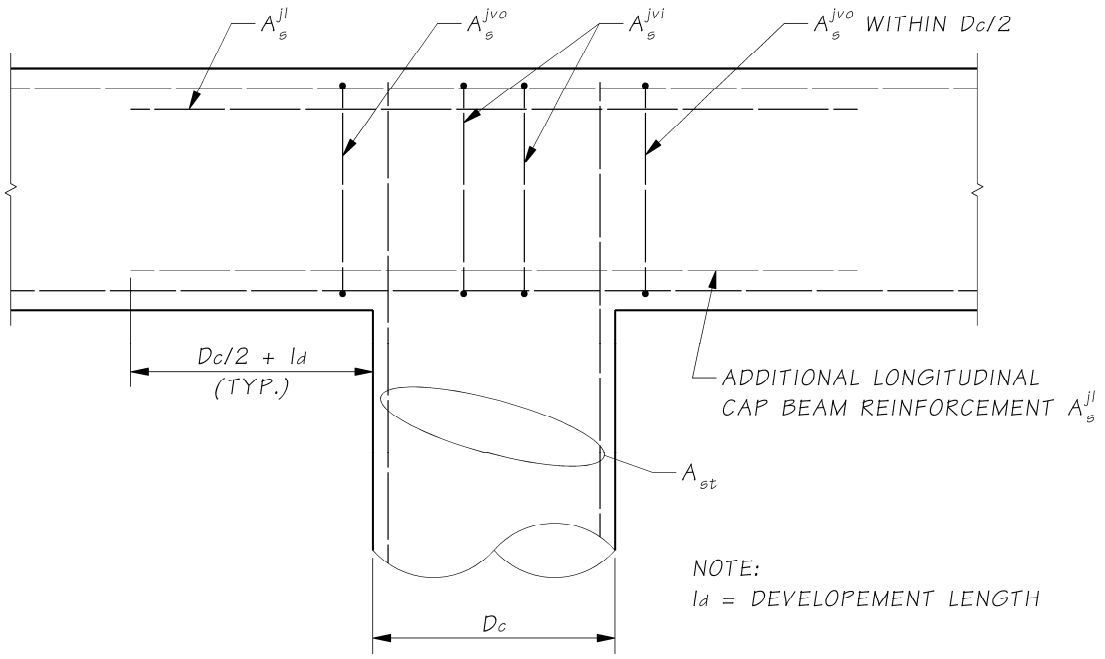

Figure 8.13.5.1.3-1 Additional Longitudinal Cap Beam Reinforcement for Joint Force Transfer
BDM Figure 4.2.44-1

Add C8.13.5.1.3:

The additional longitudinal cap beam reinforcement in reinforced concrete "T" joint is based on the force transfer method proposed by Sritharan (2005).

4.2.45 Horizontal Isolated Flares

Guide Specifications Article 8.14.1

Delete the last sentence in second paragraph.

Delete the entire third paragraph and replace with the following:

For SDCs C and D, the gap shall be large enough so that it will not close during a seismic event. The gap thickness shall be based on the estimated ductility demand and corresponding plastic hinge rotation capacity. The total deformation of the flare edge can be calculated by multiplying the total rotation, which is the summation of θ_p and θ_y, by the distance from the neutral axis of the section at the ultimate curvature to the edge of flare. The yield rotation, θ_y, can be calculated using the moment-area method by integrating the M/EI along the column height. The plastic rotation, θ_p, is given by:

$$\theta_p = L_p(\phi_u - \phi_y) \quad (8.14.1\text{-}1)$$

Where:

L_p = Analytical plastic hinge length as determined in Equation 4.11.6-3 (in.).
ϕ_u = Ultimate curvature as defined in Article 8.5.

The procedure is based on curvature analysis of the section and does not include bond slip and the deflection of the beam. To prevent the gap closure, the calculated gap thickness shall be multiplied by a factor of 3 to determine the required gap.

Add C8.14.1:

The required gap is determined using Caltrans procedure and the safety factor recommended by Chandane et al. (2004).

4.2.46 Column Shear Key Design for SDCs C and D

Guide Specifications Article 8.15

Add the following paragraph:

The column hinge shall be designed in accordance with the *AASHTO LRFD Bridge Design Specifications* Article 5.8.4 provisions for shear friction using the nominal material strength properties. The design procedure and hinge detail per TRAC Report WA-RD 220.1 titled "Moment-Reducing Hinge Details for the Based of Bridge Columns" should be used. The thickness of the expansion joint filler shall allow the maximum column rotation without crushing the edge of the column concrete against the cap beam or footing.

4.2.47 Cast-in-Place and Precast Concrete Piles

Guide Specifications Article 8.16.2

Minimum longitudinal reinforcement of 0.75% of A_g shall be provided for CIP piles in SDCs B, C, and D. Longitudinal reinforcement shall be provided for the full length of pile unless approved by the WSDOT Bridge Design Engineer.

4.3 Seismic Design Requirements for Bridge Widening Projects

4.3.1 Seismic Analysis and Retrofit Policy

Widening of existing bridges is often challenging, specifically when it comes to determining how to address elements of the existing structure that do not meet current design standards. The Seismic Analysis and Retrofit Policy for Bridge Widening Projects (Figure 4.3-1) has been established to give bridge design engineers guidance on how and when to address structural deficiencies in existing bridges that are being widened. This policy balances the engineers responsibility to "safeguard life, health, and property" (WAC 196-27A-020) with their responsibility to "achieve the goals and objectives agreed upon with their client or employer." (WAC 196-27A-020 (2)(a)). Current versions of bridge design specifications/codes do not provide guidance on how to treat existing structures that are being widened. This policy is based on, and validated by, the requirements of the International Building Code (2009 IBC Section 3403.4). The IBC is the code used throughout the nation for design of most structures other than bridges. Thus, the requirements of the IBC can be taken to provide an acceptable level of safety that meets the expectations of the public.

This "Do No Harm" policy requires the bridge engineer to compare existing bridge element seismic capacity/demand ratios for the before widening condition to those of the after widening condition. If the capacity/demand ratio is not decreased, the widening can be designed and constructed without retrofitting existing seismically deficient bridge elements. In this case, retrofit of seismically deficient elements is recommended but not required. The decision to retrofit these elements is left to the Region and is based on funding availability. If the widened capacity/demand ratios are decreased, the seismically deficient existing elements must be retrofitted as part of the widening project.

This policy allows bridge widening projects to be completed without addressing existing seismic risks, provided "No Harm" is done to the existing structure. The existing seismic risks are left to be addressed by a bridge seismic retrofit project. This approach maintains the priorities that have been set by the Washington State Legislature. Most widening projects are funded by the I1 - Mobility Program. The objective of the I1-Mobility Program is to improve mobility… not to address seismic risks. Bridge seismic risks are addressed through bridge seismic retrofit projects that are funded as part of the P2 - Structures Preservation Program. The Legislature has established the priority of these and other programs, and set funding levels accordingly. This policy upholds the priorities established by the Legislature, by accomplishing widening (mobility) projects without requiring that retrofit (preservation/risk reduction) work be added to the scope, provided the existing structure is not made worse.

Widening elements (new structure) shall be designed to meet current WSDOT standards for new bridges.

A seismic analysis is not required for single-span bridges. However, existing elements of single span bridges shall meet the requirements of *AASHTO Guide Specifications for LRFD Seismic Bridge Design* Section 4.5.

A seismic analysis is not required for bridges in SDC A. However, existing elements of bridges in SDC A shall meet the requirements of *AASHTO Guide Specifications for LRFD Seismic Bridge Design* Section 4.6.

When the addition of the widening has insignificant effects on the existing structure elements, the seismic analysis may be waived with the WSDOT Bridge Design Engineer's approval. In many cases, adding less than 10% mass without new substructure could be considered insignificant.

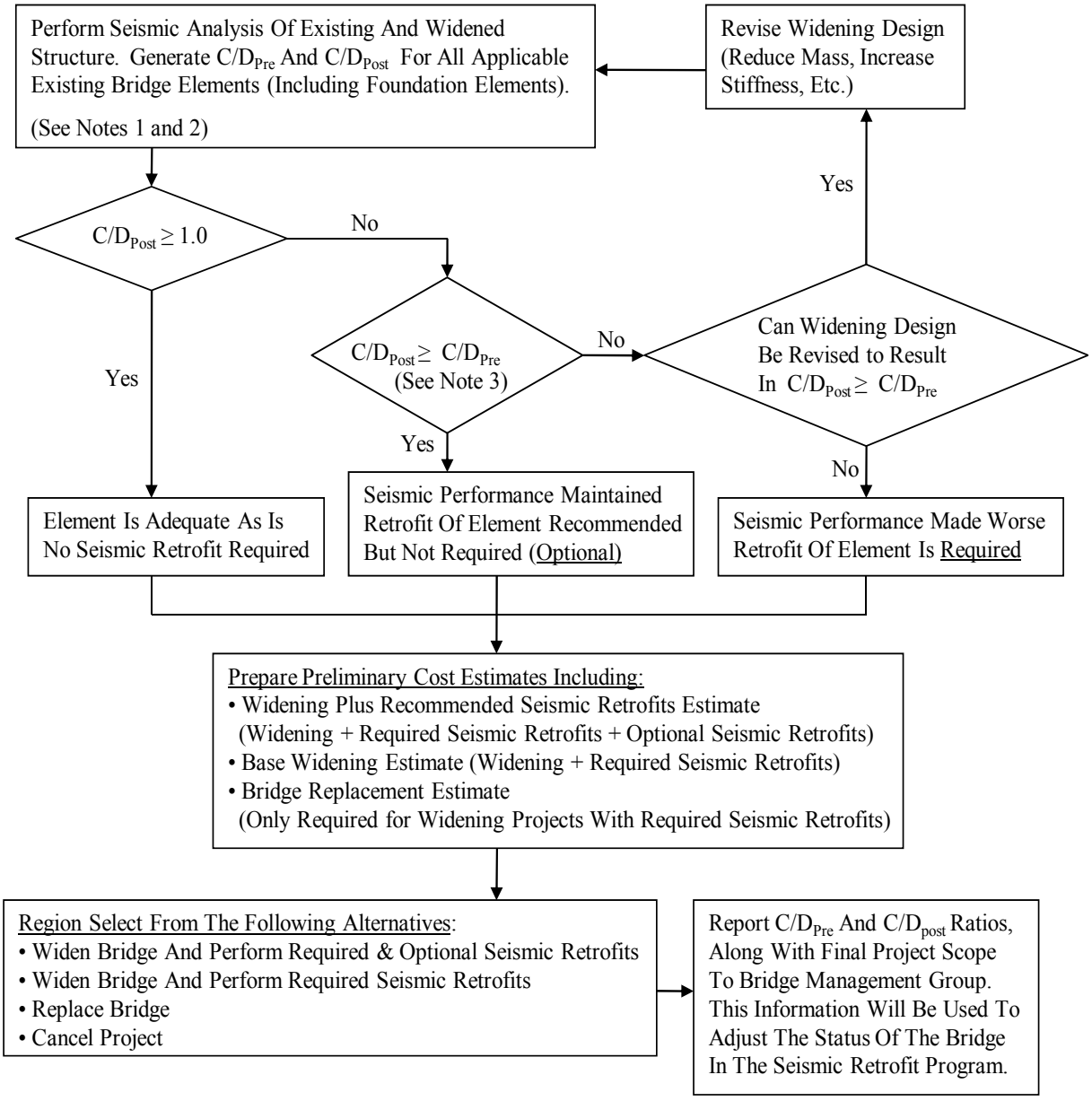

LEGEND

C/D$_{Pre}$ = Existing Bridge Element Seismic Capacity Demand Ratio Before Widening
C/D$_{Post}$ = Existing Bridge Element Seismic Capacity Demand Ratio After Widening

NOTES

1. Widening elements (new structure) shall be designed to meet current WSDOT standards for New Bridges.
2. Seismic analysis shall account for substandard details of the existing bridge.
3. C/D ratios are evaluated for each existing bridge element.

WSDOT Seismic Analysis and Retrofit Policy for Bridge Widening Projects

Figure 4.3-1

4.3.2 Design and Detailing Considerations

- **Support Length –** The support length at existing abutments, piers, in-span hinges and pavement seats shall be checked. If there is a need for longitudinal restrainers, transverse restrainers or additional support length on the existing structure they shall be included in the widening design.
- **Connections Between Existing and New Elements –** Connections between the new elements and existing elements should be designed for maximum over-strength forces. Where yielding is expected in the crossbeam connection at the Extreme Event limit state, the new structure shall be designed to carry live loads independently at the Strength I limit state. In cases where large differential settlement and/or a liquefaction-induced loss of bearing strength are expected, the connections may be designed to deflect or hinge in order to isolate the two parts of the structure. Elements subject to inelastic behavior shall be designed and detailed to sustain the expected deformations.

  Longitudinal joints between the existing and new structure are not permitted.
- **Differential Settlement –** The allowable differential settlement of bridges depends on the type of construction, the type of foundation, and the nature of soil (sand or clay). The geotechnical designer should evaluate the potential for differential settlement between the existing structure and widening structure. Additional geotechnical measures may be required to limit differential settlements to tolerable levels for both static and seismic conditions. The bridge designer shall evaluate, design and detail all elements of new and existing portions of the widening structure for the differential settlement warranted by the Geotechnical Engineer. Experience has shown that bridges can and often do accommodate more movement and/or rotation than traditionally allowed or anticipated in design. Creep, relaxation, and redistribution of force effects accommodate these movements. Some studies have been made to synthesize apparent response. The angular distortion appears to be the useful criteria for establishing the allowable limits. These studies indicate that angular distortions between adjacent foundations greater than 0.008 (RAD) in simple spans and 0.004 (RAD) in continuous spans should not be permitted in settlement criteria (Moulton et al. 1985; DiMillio, 1982; Barker et al. 1991). Other angular distortion limits may be appropriate after consideration of:
  - Cost of mitigation through larger foundations, realignment or surcharge,
  - Ride-ability,
  - Aesthetics, and,
  - Safety.

  Rotation movements should be evaluated at the top of the substructure unit (in plan location) and at the deck elevation.

  The horizontal displacement of pile and shaft foundations shall be estimated using procedures that consider soil-structure interaction (see WSDOT *Geotechnical Design Manual* M 46-03 Section 8.12.2.3). Horizontal movement criteria should be established at the top of the foundation based on the tolerance of the structure to lateral movement, with consideration of the column length and stiffness. Tolerance of the superstructure to lateral movement will depend on bridge seat widths, bearing type(s), structure type, and load distribution effects.
- **Foundation Types –** The foundation type of the new structure should match that of the existing structure. However, a different type of foundation may be used for the new structure due to geotechnical recommendations or the limited space available between existing and new structures. For example, a shaft foundation may be used in lieu of spread footing.
- **Existing Strutted Columns –** The horizontal strut between existing columns may be removed. The existing columns shall then be analyzed with the new un-braced length and retrofitted if necessary.
- **Non-Structural Element Stiffness –** Median barrier and other potentially stiffening elements shall be isolated from the columns to avoid any additional stiffness to the system.

- Deformation capacities of existing bridge members that do not meet current detailing standards shall be determined using the provisions of Section 7.8 of the *Retrofitting Manual for Highway Structures: Part 1 – Bridges*, FHWA-HRT-06-032. Deformation capacities of existing bridge members that meet current detailing standards shall be determined using the latest edition of the *AASHTO Guide Specifications for LRFD Seismic Bridge Design*.
- Joint shear capacities of existing structures shall be checked using Caltrans *Bridge Design Aid*, 14-4 Joint Shear Modeling Guidelines for Existing Structures.
- In lieu of specific data, the reinforcement properties provided in Table 4.3.2-1 should be used.

Property	Notation	Bar Size	ASTM A706	ASTM A615 Grade 60	ASTM A615 Grade 40
Specified minimum yield stress (ksi)	f_y	#3 - #18	60	60	40
Expected yield stress (ksi)	f_{ye}	#3 - #18	68	68	48
Expected tensile strength (ksi)	f_{ue}	#3 - #18	95	95	81
Expected yield strain	ε_{ye}	#3 - #18	0.0023	0.0023	0.00166
Onset of strain hardening	ε_{sh}	#3 - #8	0.0150	0.0150	0.0193
		#9	0.0125	0.0125	
		#10 & #11	0.0115	0.0115	
		#14	0.0075	0.0075	
		#18	0.0050	0.0050	
Reduced ultimate tensile strain	ε_{su}^{R}	#4 - #10	0.090	0.060	0.090
		#11 - #18	0.060	0.040	0.060
Ultimate tensile strain	ε_{su}	#4 - #10	0.120	0.090	0.120
		#11 - #18	0.090	0.060	0.090

Stress Properties of Reinforcing Steel Bars
Table 4.3.2-1

4.4 Seismic Retrofitting of Existing Bridges

4.4.1 General

Seismic retrofitting of existing bridges shall be performed in accordance with the FHWA publication FHWA-HRT-06-032, *Seismic Retrofitting Manual for Highway Structures: Part 1 – Bridges*.

4.4.2 Seismic Analysis Requirements

The first step in retrofitting a bridge is to analyze the existing structure to identify seismically deficient elements. The initial analysis consists of generating capacity/demand ratios for all relevant bridge components. Seismic displacement and force demands shall be determined using the Multi-Mode Spectral Analysis of section 5.4.2.2 (at a minimum). Prescriptive requirements, such as support length, shall be considered a demand, and shall be included in the analysis. Seismic capacities shall be determined in accordance with the requirements of the Seismic Retrofitting Manual. Displacement capacities shall be determined by the Method D2 – Structure Capacity/Demand (Pushover) Method of Section 5.6. For most WSDOT bridges, the seismic analysis need only be performed for the upper level (1000-year return period) ground motions with a Life Safety seismic performance level.

4.4.3 Seismic Retrofit Design

Once seismically deficient bridge elements have been identified, appropriate retrofit measures shall be selected and designed. Table 1-11, Chapters 8, 9, 10, 11, and Appendices D thru F of the Seismic Retrofitting Manual shall be used in selecting and designing the seismic retrofit measures. The WSDOT Bridge and Structure Office Seismic Specialist shall be consulted in the selection and design of the retrofit measures.

4.4.4 Computer Analysis Verification

The computer results shall be verified to ensure accuracy and correctness. The designer should use the following procedures for model verification:

- Using graphics to check the orientation of all nodes, members, supports, joint and member releases. Make sure that all the structural components and connections correctly model the actual structure.
- Check dead load reactions with hand calculations. The difference should be less than 5%.
- Calculate fundamental and subsequent modes by hand and compare results with computer results.
- Check the mode shapes and verify that structure movements are reasonable.
- Increase the number of modes to obtain 90% or more mass participation in each direction. GTSTRUDL/SAP2000 directly calculates the percentage of mass participation.
- Check the distribution of lateral forces. Are they consistent with column stiffness? Do small changes in stiffness of certain columns give predictable results?

4.4.5 Earthquake Restrainers

Longitudinal restrainers shall be high strength bars in accordance with the requirements of Bridge Special provision BSP022604.

4.5 Seismic Design Requirements for Retaining Walls

4.5.1 General

All retaining walls shall include seismic design load combinations. The design acceleration for retaining walls shall be determined in accordance with the *AASHTO Guide Specifications for LRFD Seismic Bridge Design*. Once the design acceleration is determined, the designer shall follow the applicable design specification requirements listed below:

Wall Types	Design Specifications
Soldier Pile Walls With and Without Tie-Backs	AASHTO LRFD Bridge Design Specifications
Pre-Approved Proprietary Walls	AASHTO LRFD Bridge Design Specifications or the AASHTO Standard Specifications for Highway Bridges-17th Edition and 1,000 yr map design acceleration.
Non-Preapproved Proprietary Walls	AASHTO LRFD Bridge Design Specifications
Standard Plan Geosynthetic Walls	AASHTO LRFD Bridge Design Specifications
Non-Standard Geosynthetic Walls	AASHTO LRFD Bridge Design Specifications
Standard Plan Reinforced Concrete Cantilever Walls	AASHTO LRFD Bridge Design Specifications
Non-Standard Non-Proprietary Walls	AASHTO LRFD Bridge Design Specifications
Soil Nail Walls	AASHTO LRFD Bridge Design Specifications
Standard Plan Noise Barrier Walls	*AASHTO Guide Specifications for Structural Design of Sound Barriers* – 1989 & Interims.
Non-Standard Noise Barrier Walls	Design per Chapter 3 of this manual.
Pre-Approved and Standard Plan Moment Slabs for SE Walls and Geosynthetic Walls	AASHTO LRFD Bridge Design Specifications
Non-Pre-Approved and Non-Standard Moment Slabs for SE Walls and Geosynthetic Walls	AASHTO LRFD Bridge Design Specifications
Non-Standard Non-Proprietary Walls, Gravity Blocks, Gabion Walls	AASHTO LRFD Bridge Design Specifications

Exceptions to the cases described above may occur with approval from the WSDOT Bridge Design Engineer and/or the WSDOT Geotechnical Engineer.

4.99 References

AASHTO *LRFD Bridge Design Specifications*, 4th Edition, and Interims through 2009.

AASHTO *Guide Specifications for LRFD Seismic Bridge Design*, 1st Edition, 2009.

Caltrans. *Bridge Design Aids* 14-4 Joint Shear Modeling Guidelines for Existing Structures, California Department of Transportation, August 2008.

Chandane,S., D. Sanders, and M. Saiidi, "Static and Dynamic Performance of RC Bridge Bents with Architectural-Flared Columns," Report No. CCEER-03-08, University of Nevada, Reno, 2004.

FHWA *Seismic Retrofitting Manual for Highway Structures: Part 1-Bridges*, Publication No. FHWA-HRT-06-032, January 2006.

Sritharan, S., "Improved Seismic Design Procedure for Concrete Bridge Joints", Journal of the Structural Engineering, ASCE, Vol. 131, No. 9, September 2005, pp. 1334-1344.

Design Example – Restrainer Design

FHWA-HRT-06-032 *Seismic Retrofitting Manual for Highway Structures: Part 1 - Bridges*, Example 8.1
Restrainer Design by Iterative Method

N =	12.00 "	Seat Width (inch)
d_c =	2.00 "	concrete cover on vertical faces at seat (inch)
"G" =	1.00 "	expansion joint gap (inch). For new structures, use maximum estimated opening.
F.S. =	0.67	safety factor against the unseating of the span
F_y =	176.00 ksi	restrainer yield stress (ksi)
E =	10,000	restrainer modulus of elasticity (ksi)
L =	18.00 '	restrainer length (ft.)
D_{rs} =	1.00 "	restrainer slack (inch)
W_1 =	5000.00	the weight of the less flexible frame (kips) (Frame 1)
W_2 =	5000.00	the stiffness of the more flexible frame (kips) (Frame 2)
K_1 =	2040	the stiffness of the less flexible frame (kips/in) (Frame 1)
K_2 =	510	the stiffness of the more flexible frame (kips/in) (Frame 2) OK
μ_d =	4.00	Target displacement ductility of the frames
g =	386.40	acceleration due to gravity (in/sec^2)
ξ =	0.05	design spectrum damping ratio
S_{DS} =	1.75	short period coefficient $S_{DS} = F_a S_s$
S_{D1} =	0.70	long period coefficient $S_{D1} = F_v S_1$
A_s =	0.28	effective peak ground acceleration coefficient
Δ_{tol} =	0.05 "	converge tolerance

Calculate the period at the end of constant design spectral acceleration plateau (sec)

$$T_s = \frac{S_{D1}}{S_{DS}} = 0.7 / 1.75 = 0.4 \text{ sec}$$

Calculate the period at beginning of constant design spectral acceleration plateau (sec)

$$T_o = 0.2 T_s = 0.2 * 0.4 = 0.08 \text{ sec}$$

Step 1: Calculate Available seat width, D_{as}

D_{as} = 12 - 1 - 2 * 2 = 7 " 0.67 * 7 = 4.69 "

Step 2: Calculate Maximum Allowable Expansion Joint Displacement and compare to the available seat width.

D_r = 1 + 176 * 18 * 12 / 10000 = 4.8 " >= 4.69 " NG

Step 3: Compute expansion joint displacement without restrainers

The effective stiffness of each frame are modified due to yielding of frames.

$K_{1,eff}$ = 2040 / 4 = 510 kip/in

$K_{2,eff}$ = 510 / 4 = 127.5 kip/in

The effective natural period of each frame is given by:

$$T_{1,eff} = 2\pi\sqrt{\frac{W_1}{gK_{1,eff}}}$$ = 2 * PI() *(5000 / (386.4 * 510))^0.5 = 1 sec.

$$T_{2,eff} = 2\pi\sqrt{\frac{W_2}{gK_{2,eff}}}$$ = 2 * PI() *(5000 / (386.4 * 127.5))^0.5 = 2 sec.

The effective damping and design spectrum correction factor is:

ξ_{eff} = 0.05 + (1 - 0.95 /(4) ^ 0.5 - 0.05 * (4) ^ 0.5) / PI() = 0.19

c_d = 1.5 / (40 * 0.19 + 1) + 0.5 = 0.68

Determine the frame displacement from Design Spectrum

$T_{1,eff}$ = 1.00 sec. $S_a(T_{1,eff})$ = 0.699

$T_{2,eff}$ = 2.00 sec. $S_a(T_{2,eff})$ = 0.350

Modified displacement for damping other than 5 percent damped bridges

$$D_1 = \left(\frac{T_{1,eff}}{2\pi}\right)^2 c_d\, S_a(T_{1,eff})\, g$$ = (1 / (2*PI()))^2 * 0.68* 0.699 * 386.4 = 4.65 "

$$D_2 = \left(\frac{T_{2,eff}}{2\pi}\right)^2 c_d\, S_a(T_{2,eff})\, g$$ = (2 / (2*PI()))^2 * 0.68* 0.35 * 386.4 = 9.3 "

The relative displacement of the two frames can be calculated using the CQC combination of the two frame displacement as given by equation (Eq. 3)

the frequency ratio of modes, $\beta = \frac{\omega_1}{\omega_2} = \frac{T_2}{T_1}$ = 2 / 1 = 2

The cross-correlation coefficient,

$$\rho_{12} = \frac{8\xi_{eff}^2(1+\beta)\beta^{3/2}}{(1-\beta^2)^2 + 4\xi_{eff}^2\beta(1+\beta)^2}$$

ρ_{12} = (8 * 0.19 ^2)*(1 + 2)*(2 ^(3/2))/((1 - 2 ^2)^2 + 4* 0.19 ^2* 2 *(1+ 2)^2) = 0.2

The initial relative hinge displacement

D_{eq_o} = (4.65 ^2 + 9.3 ^2 - 2 * 0.2 * 4.65 * 9.3) ^ 0.5 = 9.52 " >=2/3 Das = 4.69 "

Restrainers are required

Step 4: Estimate the Initial restrainer stiffness

$$K_{eff_{\mathrm{mod}}} = \frac{K_{1,eff} K_{2,eff}}{K_{1,eff} + K_{2,eff}}$$ = (510 * 127.5) / (510 + 127.5) = 102 kip/in

$$K_{r_1} = \frac{K_{eff_{\mathrm{mod}}} (D_{eq_o} - D_r)}{D_{eq_o}}$$ = 102 * (9.52 - 4.8) / 9.52 = 50.54 kip/in

Adjust restrainer stiffness to limit the joint displacement to a prescribed value D_r.
This can be achieve by using Goal Seek on the Tools menu.

Goal Seek			
Set Cell	J104	Cell Address for	$\Delta = D_{eq} - D_r$
To Value			
By Changing Cell	D104	Cell address for initial guess	

Apply the Goal Seek every time you use the spreadsheet and Click OK

K_r = 193.21 kip/in (Input a value to start) Δ = 0.00 "

Step 5: Calculate Relative Hinge Displacement from modal analysis.

Frame 1 mass m_1 = 5000 / 386.4 = 12.94 kip. Sec^2 / in

Frame 2 mass m_2 = 5000 / 386.4 = 12.94 kip. Sec^2 / in

$K_{1,eff}$ = 510.00 kip/in $K_{2,eff}$ = 127.50 kip/in

Solve the following quadratic equation for natural frequencies

$$A(\omega_i^2)^2 + B(\omega_i^2) + C = 0$$

$A = m_1 m_2$ = 12.94 * 12.94 = 167.44

$B = -m_1(K_{2,eff} + K_r) - m_2(K_{1,eff} + K_r)$
= - 12.94 * (127.5 + 193.21) - 12.94 * (510 + 193.21) = -13249.52

$C = K_{1,eff} K_{2,eff} + (K_{1,eff} + K_{2,eff}) K_r$

C = 510 * 127.5 + (510 + 127.5) * 193.21 = 188197.22

The roots of this quadratic are

ω_1^2 = (-(-13249.52) +((-13249.52) ^2-4* 167.44 * 188197.22)^0.5)/(2*167.44) = 60.57

ω_2^2 = (-(-13249.52-((-13249.52)^2-4*167.44*188197.22)^0.5)/(2*167.44) = 18.56

The natural frequencies are

ω_1 = 7.78 rad/sec ω_2 = 4.31 rad/sec

The corresponding natural periods are

$T = \frac{2\pi}{\omega}$ $T_{1,eff}$ = 0.81 sec. $T_{2,eff}$ = 1.46 sec.

For mode 1, ω_1 = 7.78 rad/sec ω_1^2 = 60.57

$K_{1,eff} + K_r - m_1\omega_1^2$ = 510 + 193.21 - 12.94 * 60.57 = -80.61

The relative value (modal shape) corresponding

$$\frac{\phi_{11}}{\phi_{21}} = \frac{K_r}{K_{1,eff} + K_r - m_1\omega_1^2}$$ = 193.21 / -80.61 = -2.397

It is customary to describe the normal modes by assigning a unit value to one of the amplitudes.
For the first mode, set ϕ_{21} = 1.00 then ϕ_{11} = -2.40
The mode shape for the first mode is

$$\{\phi_1\} = \begin{Bmatrix} \phi_{11} \\ \phi_{21} \end{Bmatrix} = \begin{Bmatrix} -2.40 \\ 1.00 \end{Bmatrix}$$

For mode 2, ω_2 = 4.31 rad/sec ω_2^2 = 18.56

$K_{1,eff} + K_r - m_1\omega_2^2$ = 510 + 193.21 - 12.94 * 18.56 = 463.11

The relative value

$$\frac{\phi_{12}}{\phi_{22}} = \frac{K_r}{K_{1,eff} + K_r - m_1\omega_2^2}$$ = 193.21 / 463.11 = 0.417

For the 2nd mode, set ϕ_{12} = 1.00 then ϕ_{22} = 2.40

The mode shape for the 2nd mode is

$$\{\phi_2\} = \begin{Bmatrix}\phi_{12}\\ \phi_{22}\end{Bmatrix} = \begin{Bmatrix}1.00\\ 2.40\end{Bmatrix}$$

Calculate the participation factor for mode " 1 " $P_1 = \frac{\{\phi_1\}^T[M]\{1\}}{\{\phi_1\}^T[K]\{\phi_1\}}(\{a\}^T\{\phi_1\})$

$\{\phi_1\}^T[M]\{1\} = m_1\phi_{11} + m_2\phi_{21}$ = 12.94 * -2.4 + 12.94 * 1 = -18.08

$\{\phi_1\}^T[K]\{\phi_1\} = (K_{1,eff} + K_r)\phi_{11}^2 - 2K_r\phi_{11}\phi_{21} + (K_{2,eff} + K_r)\phi_{21}^2$

= (510 + 193.21) * (-2.4) ^2 - 2* 193.21 * -2.4 * 1 + (127.5 + 193.21) * (1) ^2 = 5286.98

$\{a\}^T\{\phi_1\} = \phi_{21} - \phi_{11}$ = 1 - -2.4 = 3.4

P_1 = -18.08 / 5286.98 * 3.4 = -0.0116 sec.^{2}

Calculate the participation factor for mode " 2 " $P_2 = \frac{\{\phi_2\}^T[M]\{1\}}{\{\phi_2\}^T[K]\{\phi_2\}}(\{a\}^T\{\phi_2\})$

$\{\phi_2\}^T[M]\{1\} = m_1\phi_{12} + m_2\phi_{22}$ = 12.94 * 1 + 12.94 * 2.4 = 43.96

$\{\phi_2\}^T[K]\{\phi_1\} = (K_{1,eff} + K_r)\phi_{12}^2 - 2K_r\phi_{12}\phi_{22} + (K_{2,eff} + K_r)\phi_{22}^2$

= (510 + 193.21) * (1) ^2 - 2* 193.21 * 1 * 2.4 + (127.5 + 193.21) * (2.4) ^2 = 1619.53

$\{a\}^T\{\phi_2\} = \phi_{22} - \phi_{12}$ = 2.4 - 1 = 1.4

P_2 = 43.96 / 1619.53 * 1.4 = 0.0379 sec.^{2}

Determine the frame displacement from Design Spectrum

$T_{1,eff}$ = 0.81 sec. $S_a(T_{1,eff})$ = 0.867

$T_{2,eff}$ = 1.46 sec. $S_a(T_{2,eff})$ = 0.480

Calculate new relative displacement at expansion joint

$D_{eq1} = P_1 c_d S_a(T_{1,eff}, 0.05)\, g =$ -0.0116 * 0.68 * 0.867 * 386.4 = -2.64 "

$D_{eq2} = P_2 c_d S_a(T_{2,eff}, 0.05)\, g =$ 0.0379 * 0.68 * 0.48 * 386.4 = 4.77 "

The effective period ratio

$$\beta = \frac{\omega_1}{\omega_2} = \frac{T_{2,eff}}{T_{1,eff}}$$ = 1.46 / 0.81 = 1.81

The cross-correlation coefficient,

ρ_{12} = (8 * 0.19 ^2)*(1+ 1.81)*(1.81 ^(3/2))/((1 -1.81 ^2)^2+4* 0.19 ^2* 1.81 *(1+1.81)^2)

= 0.26

D_{eq_1} = ((-2.64)^2 + (4.77)^2+2* 0.26 * (-2.64) * (4.77))^0.5 = 4.8 "

>4.8 "

$\Delta = D_{eq} - D_r$ = 4.8 - 4.8 = 0 "

OK Go to Step 7 and calculate the number of restrainers

Step 7: Calculate number of restrainers

$$N_r = \frac{K_r D_r}{F_y A_r}$$

D_r = 4.80 " K_r = 193.21 kip/in F_y = 176.00 ksi

A_r = 0.222 in^2

N_r = (193.21 * 4.8) / (176 * 0.222) = 23.74 restrainers

1. Introduction

This example serves to illustrate the procedure used to perform nonlinear static "pushover" analysis in both the longitudinal and transverse directions in accordance with the *AASHTO Guide Specifications for LRFD Seismic Bridge Design* using SAP2000. A full model of the bridge is used to compute the displacement demand from a response-spectrum analysis. To perform the pushover analysis in the longitudinal direction, the entire bridge is pushed in order to include the frame action of the superstructure and adjacent bents. To perform the pushover analysis in the transverse direction, a bent is isolated using the SAP2000 "staged construction" feature. The example bridge is symmetric and has three spans. It is assumed the reader has some previous knowledge of how to use SAP2000. This example was created using SAP2000 version 14.2.0.

Note: By producing this example, the Washington State Department of Transportation does not warrant that the SAP2000 software does not include errors. The example does not relieve Design Engineers of their professional responsibility for the software's accuracy and is not intended to do so. Design Engineers should verify all computer results with hand calculations.

Brief Table of Contents of Example:

1. Introduction 1

2. Model Setup 2
- 2.1 Overview of Model 2
- 2.2 Foundations Modeling 3
- 2.3 Materials Modeling 6
- 2.4 Column Modeling 15
- 2.5 Crossbeam Modeling 19
- 2.6 Superstructure Modeling 20
- 2.7 Gravity Load Patterns 22

3. Displacement Demand Analysis 23
- 3.1 Modal Analysis 23
- 3.2 Response-Spectrum Analysis 27
- 3.3 Displacement Demand 32

4. Displacement Capacity Analysis 34
- 4.1 Hinge Definitions and Assignments 34
- 4.2 Pushover Analysis 41

5. Code Requirements 66
- 5.1 P-Δ Capacity Requirement Check 66
- 5.2 Minimum Lateral Strength Check 67
- 5.3 Structure Displacement Demand/Capacity Check 69
- 5.4 Member Ductility Requirement Check 73
- 5.5 Column Shear Demand/Capacity Check 79
- 5.6 Balanced Stiffness and Frame Geometry Requirement Check 83

2. Model Setup

2.1 Overview of Model

This example employs SAP2000. The superstructure is modeled using frame elements for each of the girders and shell elements for the deck. Shell elements are also used to model the end, intermediate, and pier diaphragms. Non-prismatic frame sections are used to model the crossbeams since they have variable depth. The X-axis is along the bridge's longitudinal axis and the Z-axis is vertical. The units used for inputs into SAP2000 throughout this example are kip-in. The following summarizes the bridge being modeled:

- All spans are 145' in length
- (5) lines of prestressed concrete girders (WF74G) with 9'-6" ctc spacing
- 8" deck with 46'-11" to width
- Girders are continuous and fixed to the crossbeams at the intermediate piers
- (2) 5' diameter columns at bents
- Combined spread footings – 20'L x 40'W x 5'D at each bent
- Abutment longitudinal is free, transverse is fixed

Figure 2.1-1 shows a view of the model in SAP2000.

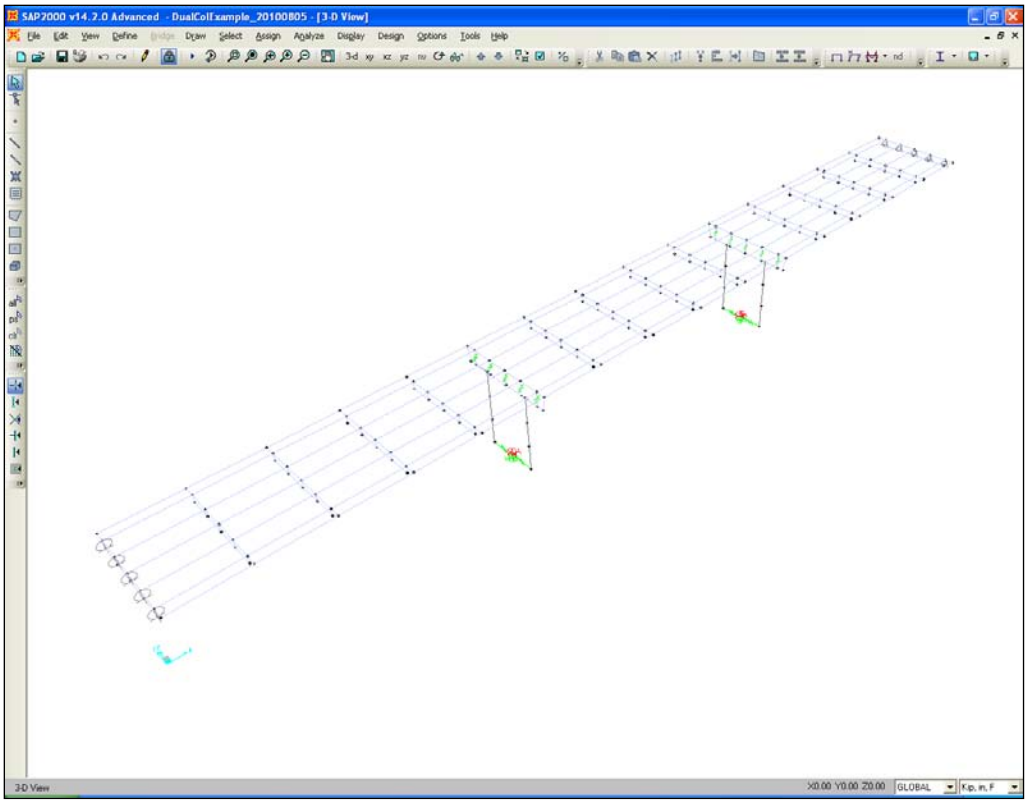

Wireframe 3-D View of Model
Figure 2.1-1

2.2 Foundations Modeling

2.2.1 Intermediate Piers

Each bent is supported by a combined spread footing that is 20'L x 40'W x 5'D. These footings are modeled using springs. Rigid links connect the bases of the columns to a center joint that the spring properties are assigned to as shown in Figure 2.2.1-1.

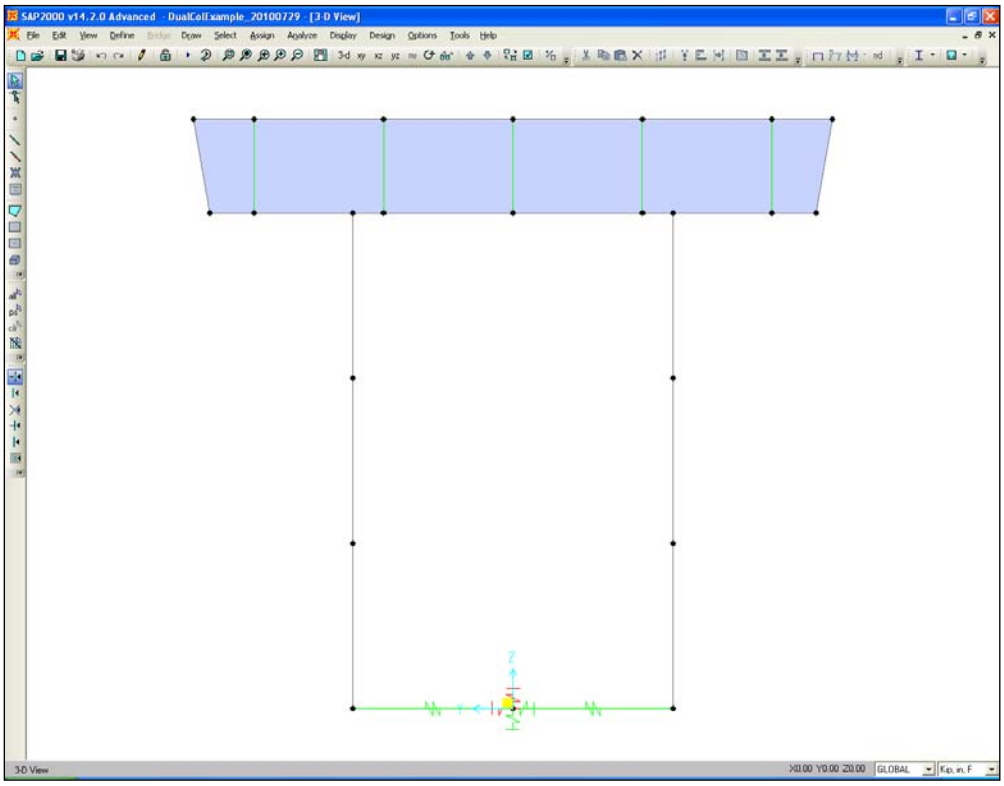

Wireframe 2-D View of Bent
Figure 2.2.1-1

The soil springs were generated using the method for spread footings outlined in Chapter 7 of the *Washington State Department of Transportation Bridge Design Manual*. The assumed soil parameters were G = 1,700 ksf and ν = 0.35. The spring values used in the model for the spread footings are shown in Table 2.2.1-1.

Degree of Freedom	Stiffness Value
UX	18,810 kip/in
UY	16,820 kip/in
UZ	18,000 kip/in
RX	1,030,000,000 kip-in/rad
RY	417,100,000 kip-in/rad
RZ	1,178,000,000 kip-in/rad

Joint Spring Values for Spread Footings
Table 2.2.1-1

Figure 2.2.1-2 shows the spread footing joint spring assignments (**Assign menu > Joint > Springs**).

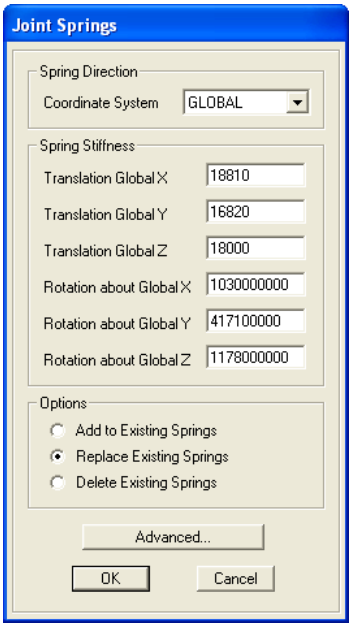

Spread Footing Joint Spring Assignments
Figure 2.2.1-2

The springs used in the demand model (response-spectrum model) are the same as the springs used in the capacity model (pushover model). It is also be acceptable to conservatively use fixed-base columns for the capacity model.

2.2.2 Abutments

The superstructure is modeled as being free in the longitudinal direction at the abutments in accordance with the policies outlined in the *Washington State Department of Transportation Bridge Design Manual*. The abutments are fixed in the transverse direction in this example for simplification. However, please note that the *AASHTO Guide Specifications for LRFD Seismic Bridge Design* require the stiffness of the transverse abutments be modeled. Since there are five girder lines instead of a spine element, the joints at the ends of the girders at the abutments all have joint restraints assigned to them. The girder joint restraint assignments at the abutments are listed in Table 2.2.2-1.

Degree of Freedom	Fixity
UX	Free
UY	Fixed
UZ	Fixed
RX	Free
RY	Free
RZ	Free

Joint Fixity for Girder Joints at Abutments
Table 2.2.2-1

Figure 2.2.2-1 shows the girder joint restraints at the abutments (**Assign menu > Joint > Restraints**).



Girder Joint Restraint Assignments at Abutments
Figure 2.2.2-1

2.3 Materials Modeling

SAP2000's default concrete material properties have elastic moduli based on concrete densities of 144 psf. The elastic moduli of the concrete materials used in this example are based on the Washington State Department of Transportation's policy on concrete densities to be used in the calculations of elastic moduli. Please see the current WSDOT *Bridge Design Manual* and *Bridge Design Memorandums*. In Version 14 of SAP2000, nonlinear material properties for Caltrans sections are no longer defined in Section Designer and are now defined in the material definitions themselves. Table 2.3-1 lists the material definitions used in the model and the elements they are applied to (**Define menu > Materials**).

Material Name	Material Type	Section Property Used For	Material Unit Weight (pcf) For Dead Load	Material Unit Weight (pcf) For Modulus of Elasticity
4000Psi-Deck	Concrete	Deck	155	150
4000Psi-Other	Concrete	Crossbeams & Diaphragms	150	145
5200Psi-Column	Concrete	Columns	150	145
7000Psi-Girder	Concrete	Girders	165	155
A706-Other	Rebar	Rebar Other Than Columns	490	-
A706-Column	Rebar	Column Rebar	490	-

Material Properties Used in Model
Table 2.3-1

The "5200Psi-Column" and "A706-Column" material definitions are created to define the expected, nonlinear properties of the column section.

The Material Property Data for the material "4000Psi-Deck" is shown in Figure 2.3-1 (**Define menu > Materials > *select* 4000Psi-Deck > *click* Modify/Show Material *button***).

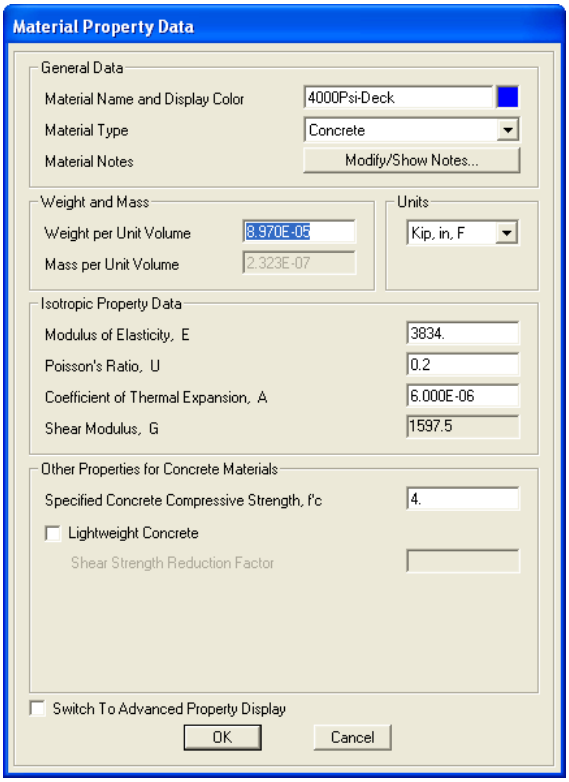

Material Property Data for Material "4000Psi-Deck"
Figure 2.3-1

The Material Property Data for the material "4000Psi-Other" is shown in Figure 2.3-2 (**Define menu > Materials > *select* 4000Psi-Other > *click* Modify/Show Material *button***).

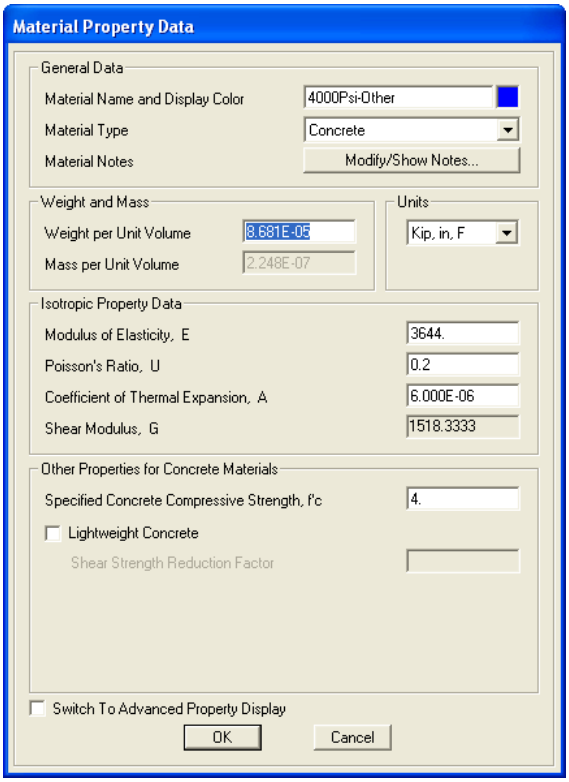

Material Property Data for Material "4000Psi-Other"
Figure 2.3-2

The Material Property Data for the material "7000Psi-Girder" is shown in Figure 2.3-3 (**Define menu > Materials >** ***select*** **7000Psi-Girder >** ***click*** **Modify/Show Material** ***button***).

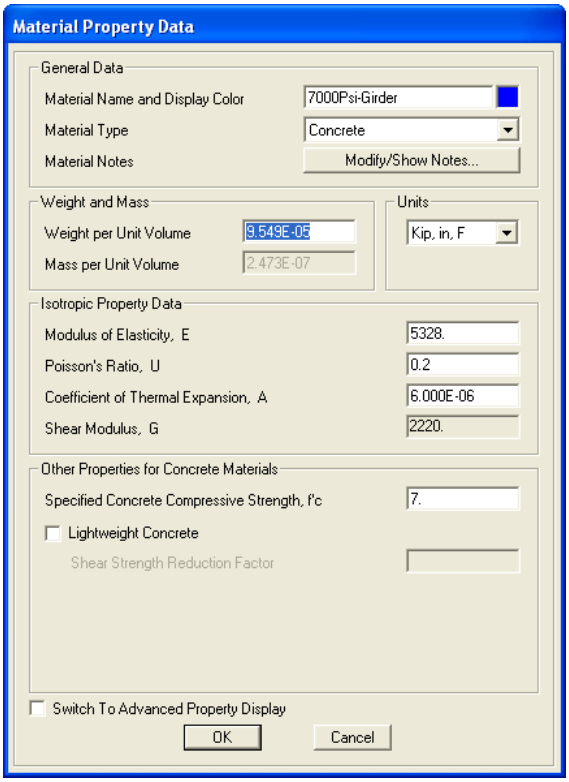

Material Property Data for Material "7000Psi-Girder"
Figure 2.3-3

The Material Property Data for the material "5200Psi-Column" is shown Figure 2.3-4 (**Define menu > Materials >** ***select*** **5200Psi-Column >** ***click*** **Modify/Show Material** ***button***).

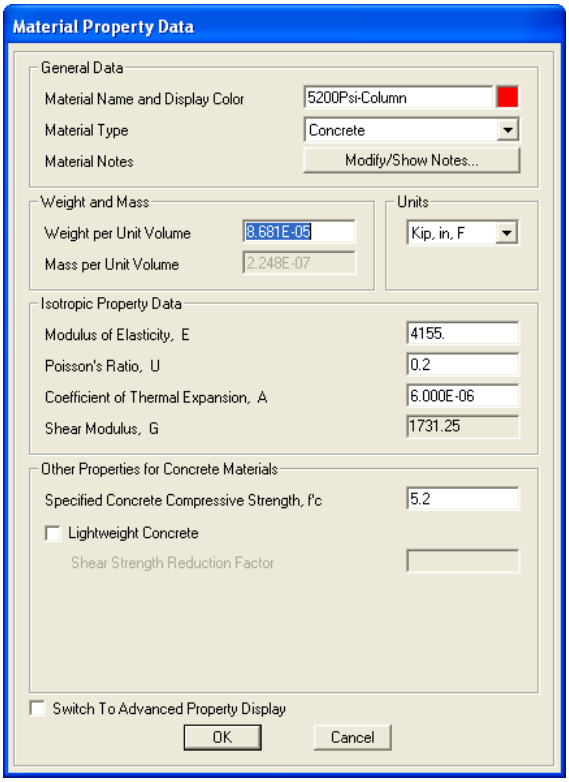

Material Property Data for Material "5200Psi-Column"
Figure 2.3-4

When the **Switch To Advanced Property Display** box shown in Figure 2.3-4 is checked , the window shown in Figure 2.3-5 opens.

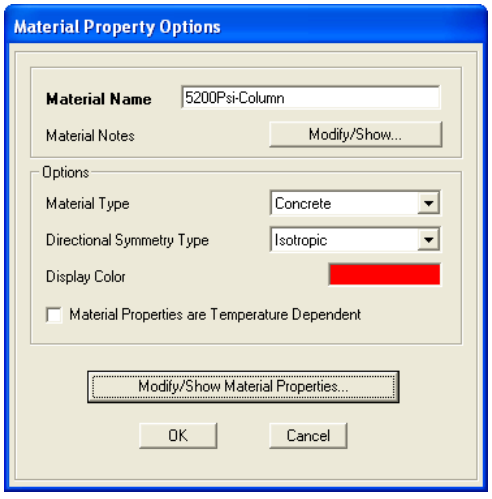

Advanced Material Property Options for Material "5200Psi-Column"
Figure 2.3-5

By clicking the **Modify/Show Material Properties** button in Figure 2.3-5, the window shown in Figure 2.3-6 opens.

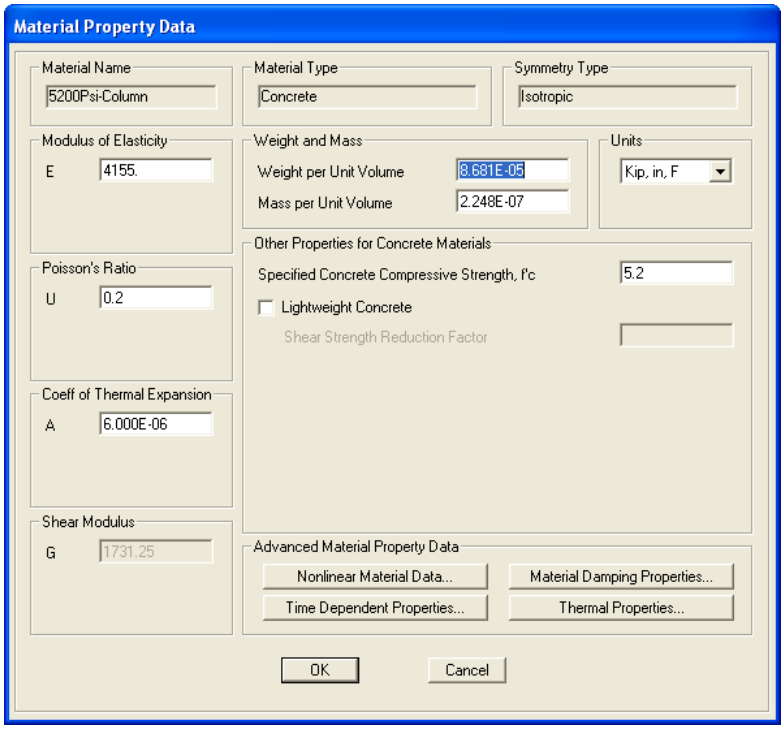

Advanced Material Property Data for Material "5200Psi-Column"
Figure 2.3-6

By clicking the **Nonlinear Material Data** button in Figure 2.3-6, the window shown in Figure 2.3-7 opens.

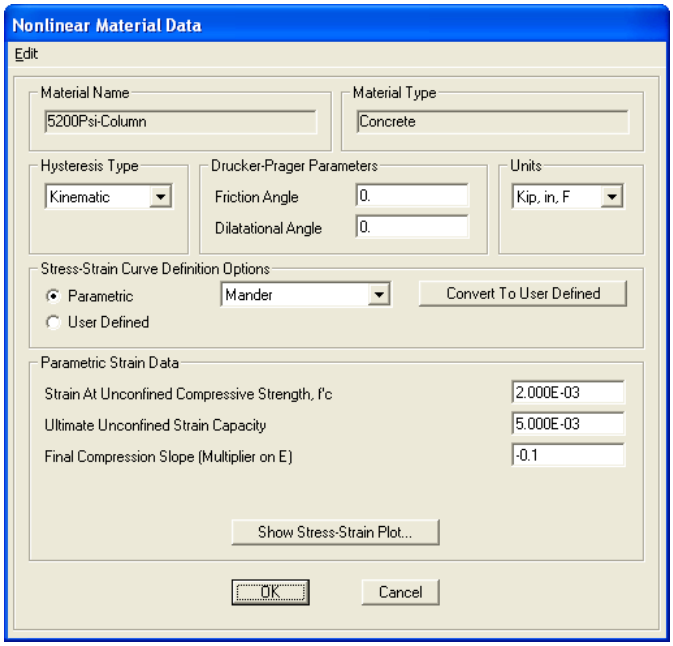

Nonlinear Material Data for Material "5200Psi-Column"
Figure 2.3-7

Note that in Figure 2.3-7 the *Strain At Unconfined Compressive Strength, f'c* and the *Ultimate Unconfined Strain Capacity* are set to the values required in Section 8.4.4 of the *AASHTO Guide Specifications for LRFD Seismic Bridge Design*. These unconfined properties are parameters used in defining the Mander confined concrete stress-strain curve of the column core. It is seen

that under the *Stress-Strain Definition Options*, **Mander** is selected. By clicking the **Show Stress-Strain Plot** button in Figure 2.3-7, a plot similar to that shown Figure 2.3-8 is displayed.

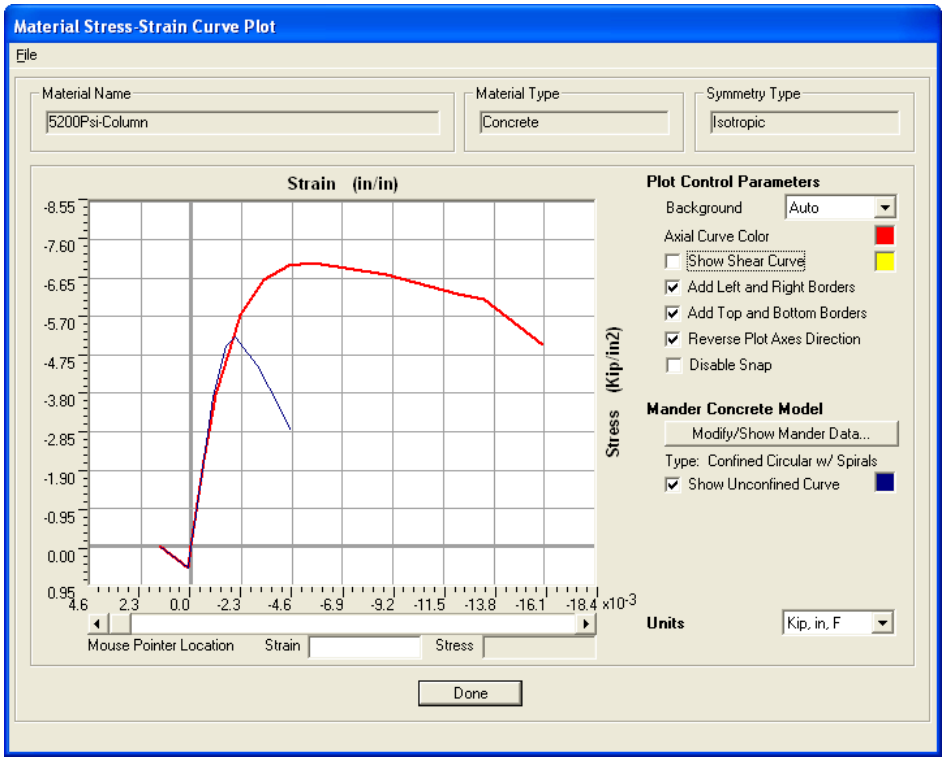

Material Stress-Strain Curve Plot for Material "5200Psi-Column"
Figure 2.3-8

Figure 2.3-8 shows both the confined and unconfined nonlinear stress-strain relationships. The user should verify that the concrete stress-strain curves are as expected.

The Material Property Data for the material "A706-Other" is shown in Figure 2.3-9 (**Define menu > Materials > *select* A706-Other > *click* Modify/Show Material *button***).

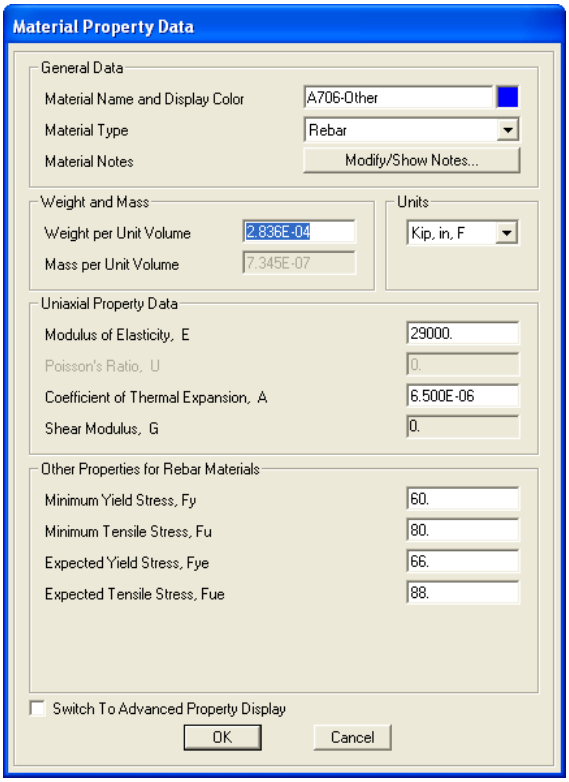

Material Property Data for Material "A706-Other"
Figure 2.3-9

The Material Property Data for the material "A706-Column" is shown in Figure 2.3-10 (**Define menu > Materials > *select* A706-Column > *click* Modify/Show Material *button***).

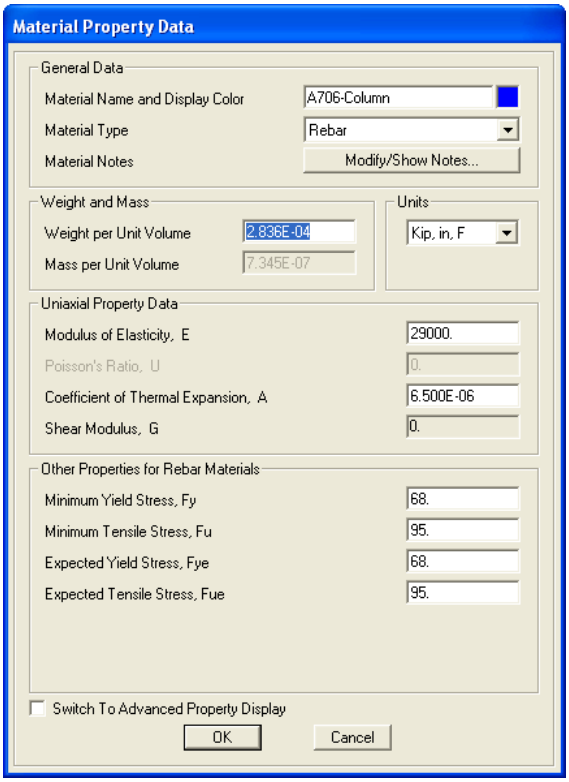

Material Property Data for Material "A706-Column"
Figure 2.3-10

When the **Switch To Advanced Property Display** box in Figure 2.3-10 is checked, the window shown in Figure 2.3-11 opens.

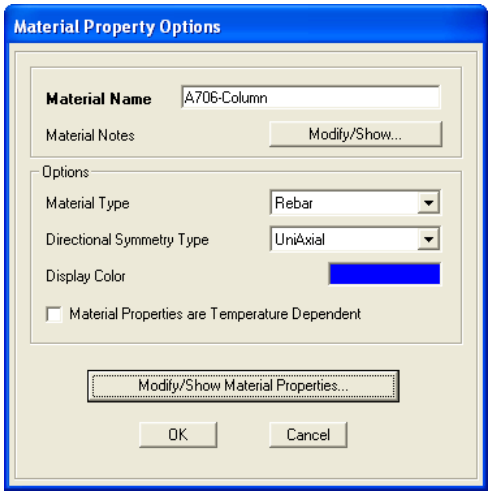

Advanced Material Property Options for Material "A706-Column"
Figure 2.3-11

By clicking the **Modify/Show Material Properties** button in Figure 2.3-11, the window shown in Figure 2.3-12 opens.

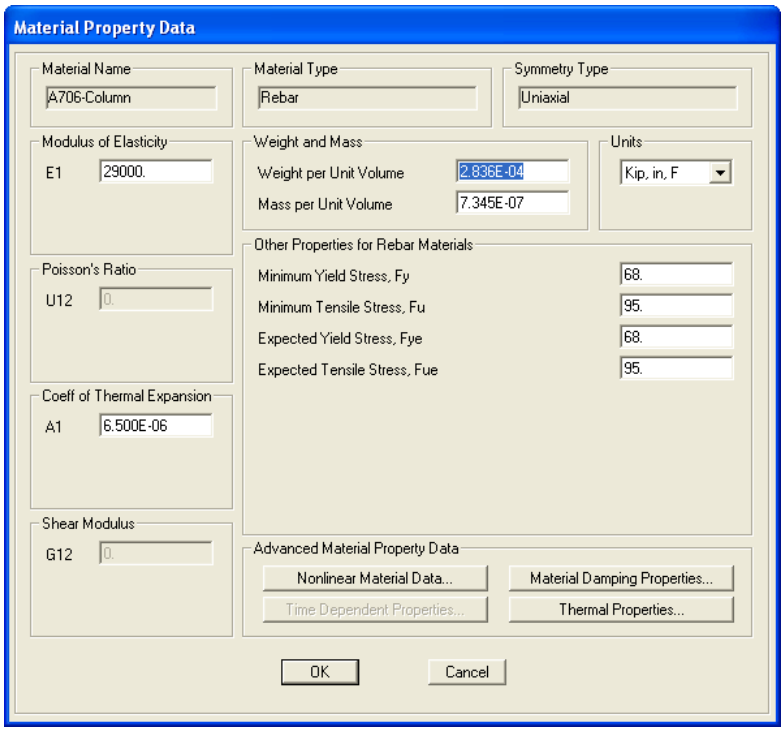

Advanced Material Property Data for Material "A706-Column"
Figure 2.3-12

In Figure 2.3-12, the *Minimum Yield Stress, Fy* = **68** ksi and the *Minimum Tensile Stress, Fu* = **95** ksi as required per Table 8.4.2-1 of the *AASHTO Guide Specifications for LRFD Seismic Bridge Design*. SAP2000 uses F_y and F_u instead of F_{ye} and F_{ue} to generate the nonlinear stress-strain curve. Therefore, the F_{ye} and F_{ue} inputs in SAP2000 do not serve a purpose for this analysis. By clicking the **Nonlinear Material Data** button in Figure 2.3-12, the window shown in Figure 2.3-13 opens.

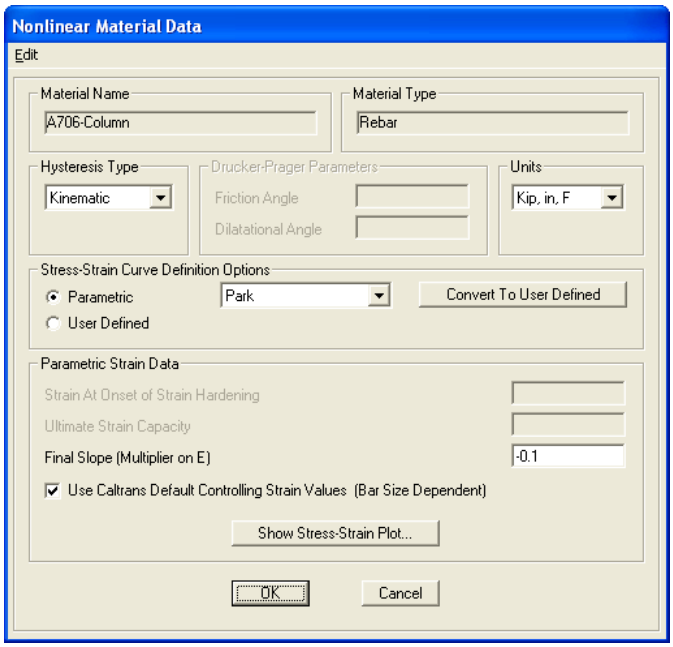

Nonlinear Material Data for Material "A706-Column"
Figure 2.3-13

In Figure 2.3-13, it is seen that under the *Stress-Strain Curve Definitions Options*, **Park** is selected. Also the box for *Use Caltrans Default Controlling Strain Values* is checked. By clicking the **Show Stress-Strain Plot** button in Figure 2.3-13 the plot shown in Figure 2.3-14 is displayed.

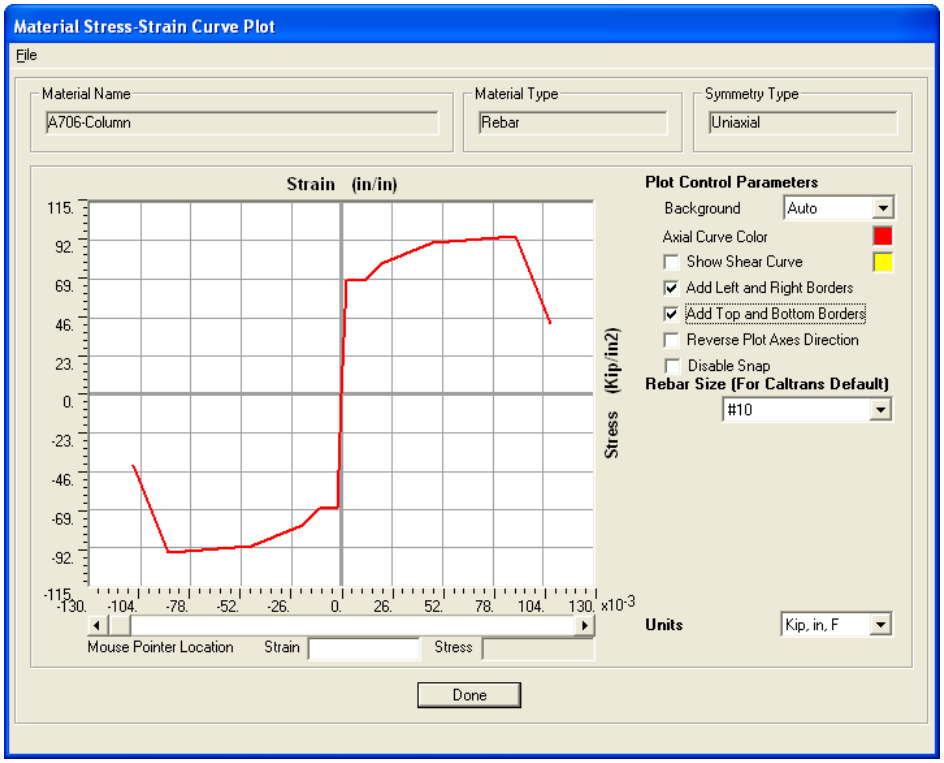

Material Stress-Strain Curve Plot for Material "A706-Column"
Figure 2.3-14

In Figure 2.3-14, the strain at which the stress begins to decrease is ε^{R}_{su}, which the user should verify for correctness.

2.4 Column Modeling

There are two columns at each bent. The columns are five feet in diameter and have (24) #10 bars for longitudinal steel, which amounts to a steel-concrete area ratio of about 1%. In the hinge zones, the columns have confinement steel consisting of #6 spiral bars with a 3.5 inch spacing.

The column elements have rigid end offsets assigned to them at the footings and crossbeams. The net clear height of the columns is 29'-2". The columns are split into three frame elements. Section 5.4.3 of the *AASHTO Guide Specifications for LRFD Seismic Bridge Design* requires that columns be split into a minimum of three elements.

Figure 2.4-1 shows the frame section property definition for the column elements (**Define menu > Section Properties > Frame Sections > *select* COL > *click* Modify/Show Property *button***).

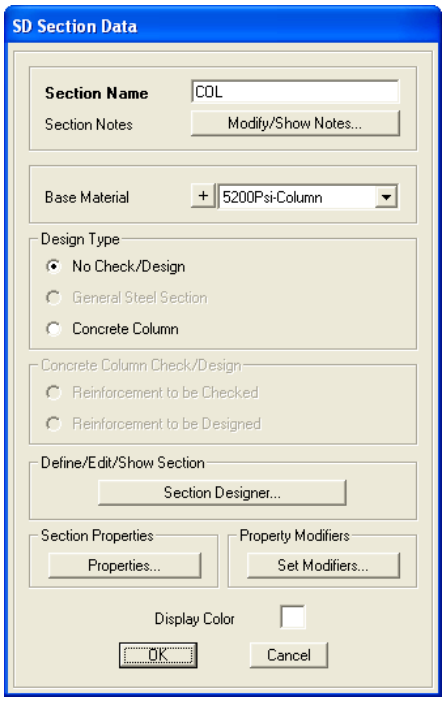

Frame Section Property Definition for Frame Section "COL"
Figure 2.4-1

By clicking the **Section Designer** button in Figure 2.4-1, the window shown in Figure 2.4-2 opens. The "COL" frame section is defined using a round Caltrans shape in Section Designer as shown in Figure 2.4-2.

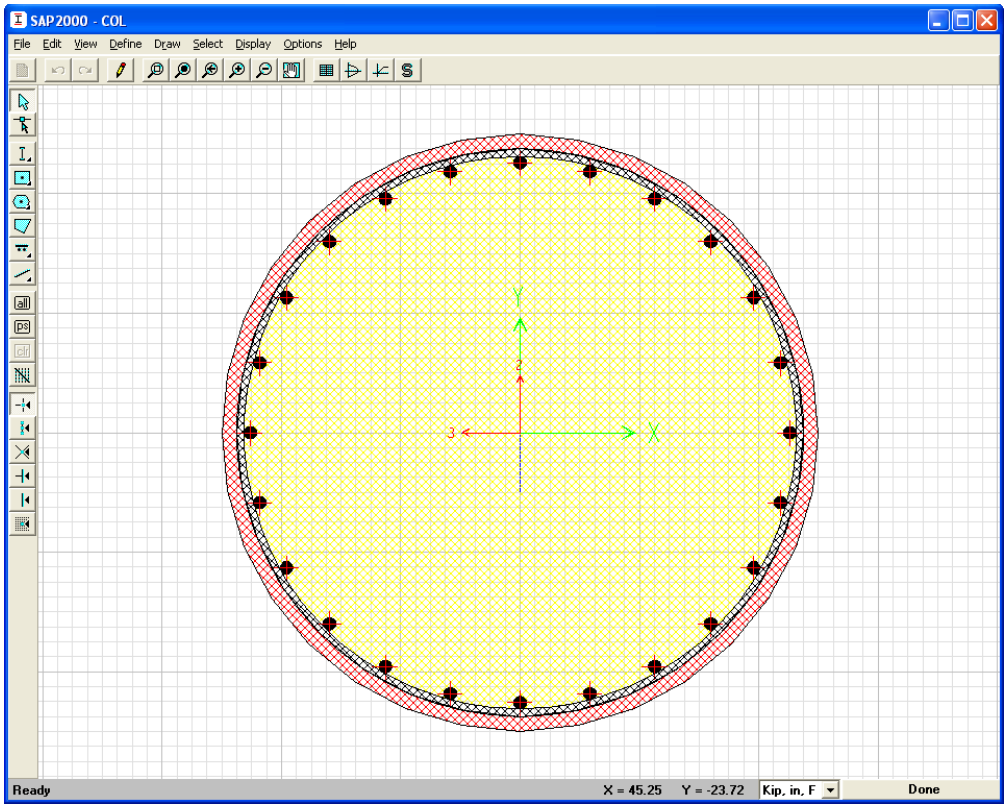

Section Designer View of Frame Section "COL"
Figure 2.4-2

By right-clicking on the section shown in Figure 2.4-2, the window shown in Figure 2.4-3 opens. Figure 2.4-3 shows the parameter input window for the Caltrans shape is shown in Figure 2.4-2.

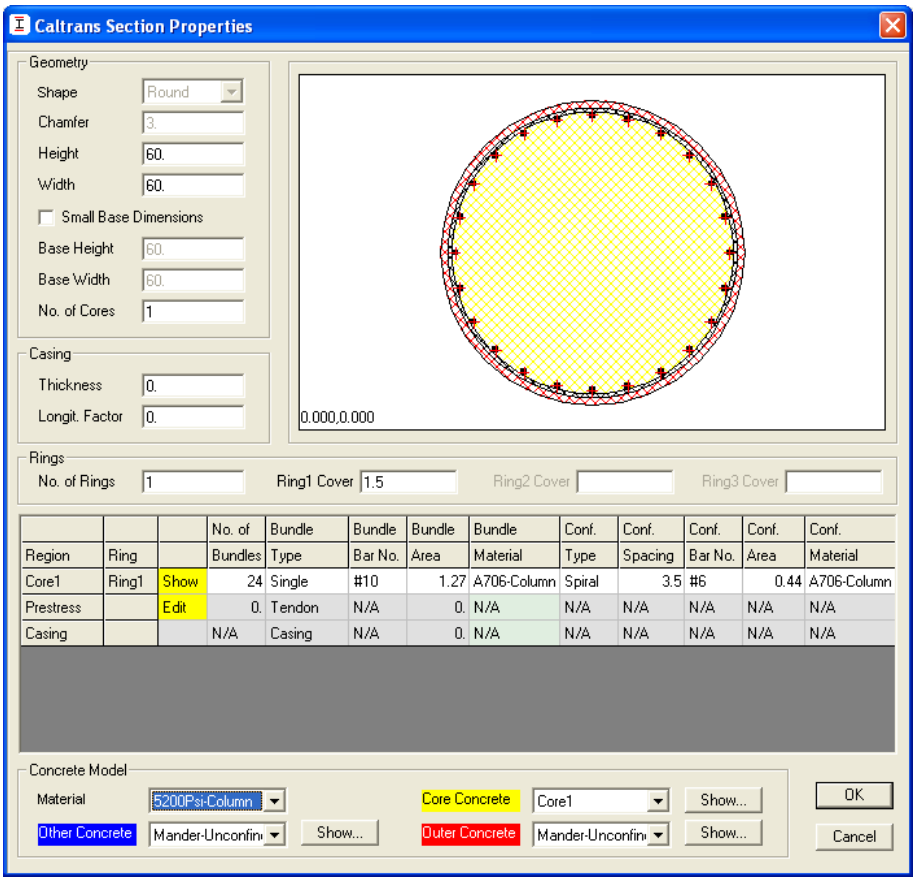

Caltrans Section Properties for Frame Section "COL"
Figure 2.4-3

By clicking the **Show** button for the *Core Concrete* in Figure 2.4-3, the window shown in Figure 2.4-4 opens.

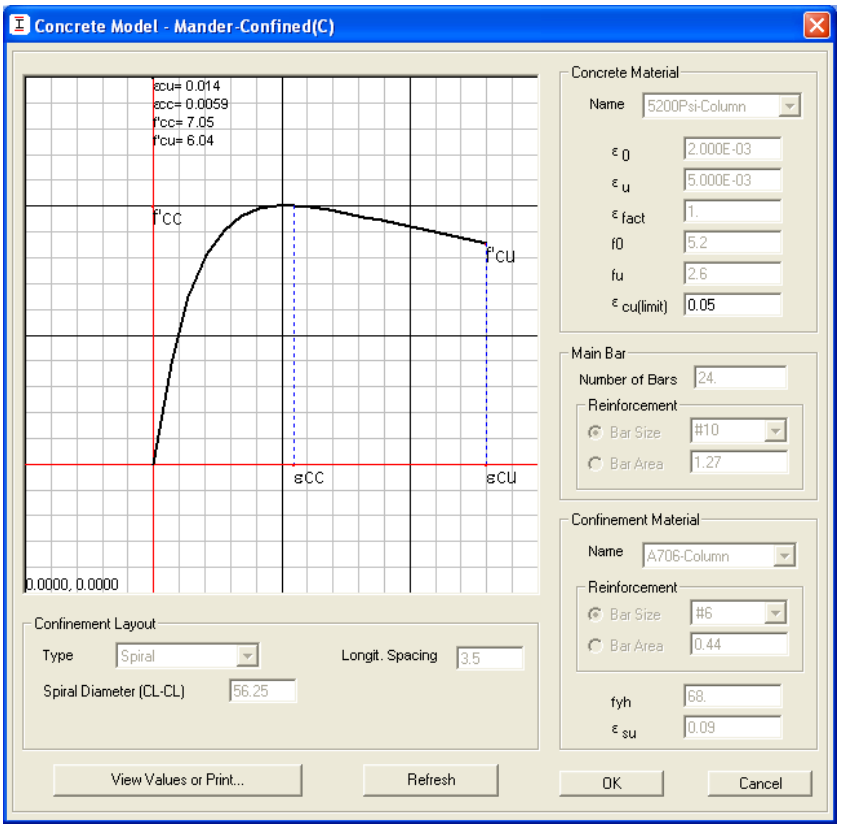

Concrete Model for Core of Frame Section "COL"
Figure 2.4-4

Figure 2.4-4 shows the Mander confined stress-strain concrete model for the core of the column. The user should verify that the concrete stress-strain curve is as expected.

2.5 Crossbeam Modeling

The crossbeams are modeled as frame elements with non-prismatic section properties due to the variable depth of the sections (**Define menu > Section Properties > Frame Sections**). The crossbeam elements have their insertion points set to the top center (**Assign menu > Frame > Insertion Point**). The pier diaphragm above the crossbeam is modeled with shell elements. An extruded view of the bent is shown in Figure 2.5-1.

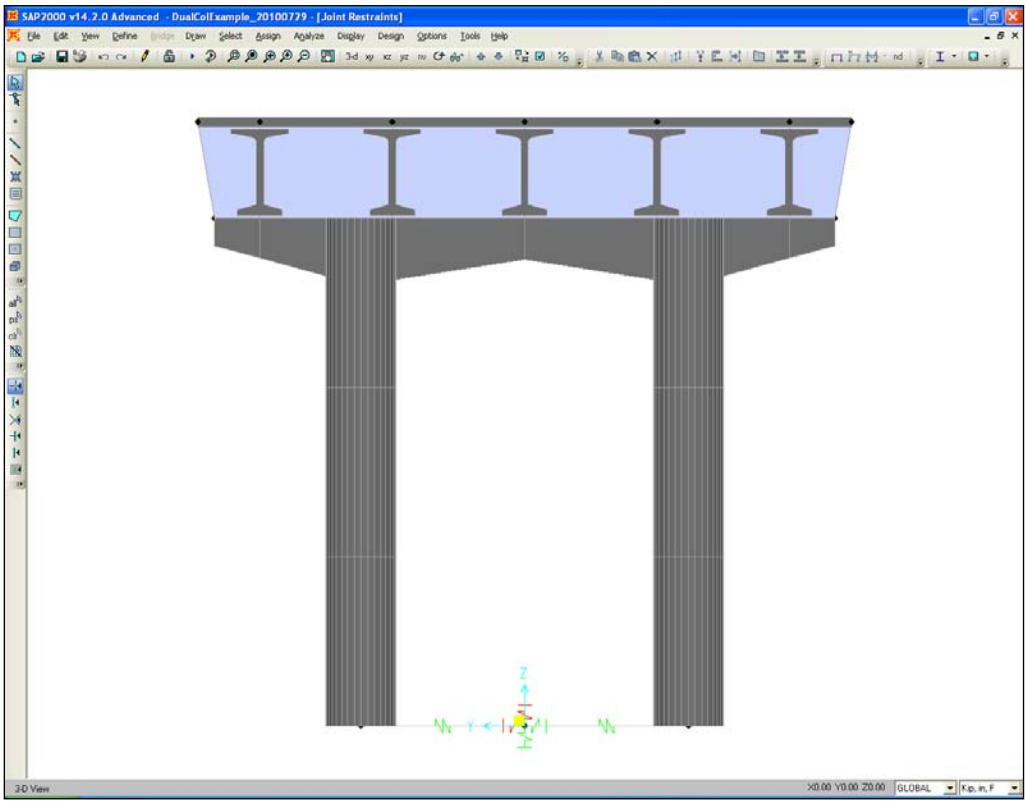

Extruded 2-D View of Bent
Figure 2.5-1

2.6 Superstructure Modeling

The girders are Washington State Department of Transportation WF74Gs. The frame section definition for section "WF74G" is shown in Figure 2.6-1 (**Define menu > Section Properties > Frame Sections > *select* WF74G > *click* Modify/Show Property *button***).

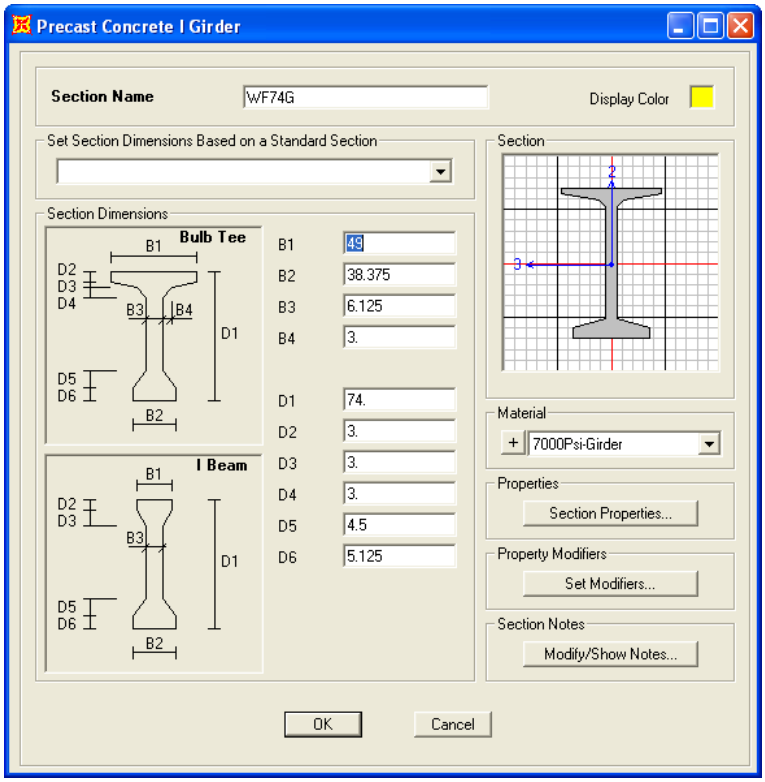

Frame Section Parameter Input for Frame Section "WF74G"
Figure 2.6-1

The girders are assigned insertion points such that they connect to the same joints as the deck elements but are below the deck. Since the deck is 8 inches thick and the gap between the top of the girder and the soffit of the deck is 3 inches, the insertion point is 7 inches (8 in./2 +3 in.) above the top of the girder. Figure 2.6-2 shows the girder frame element insertion point assignments (**Assign menu > Frame > Insertion Point**).

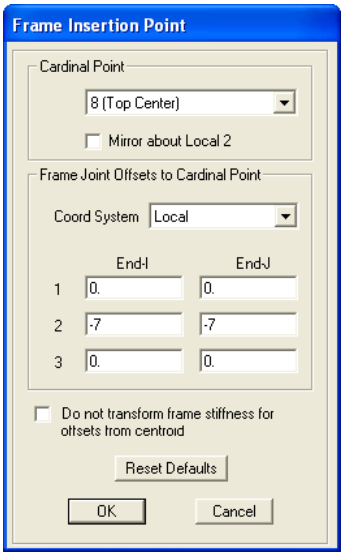

Girder Frame Element Insertion Point Assignments
Figure 2.6-2

Links connect the girders to the crossbeams which models the fixed connection between these elements. See the screen shot shown in Figure 2.6-3.

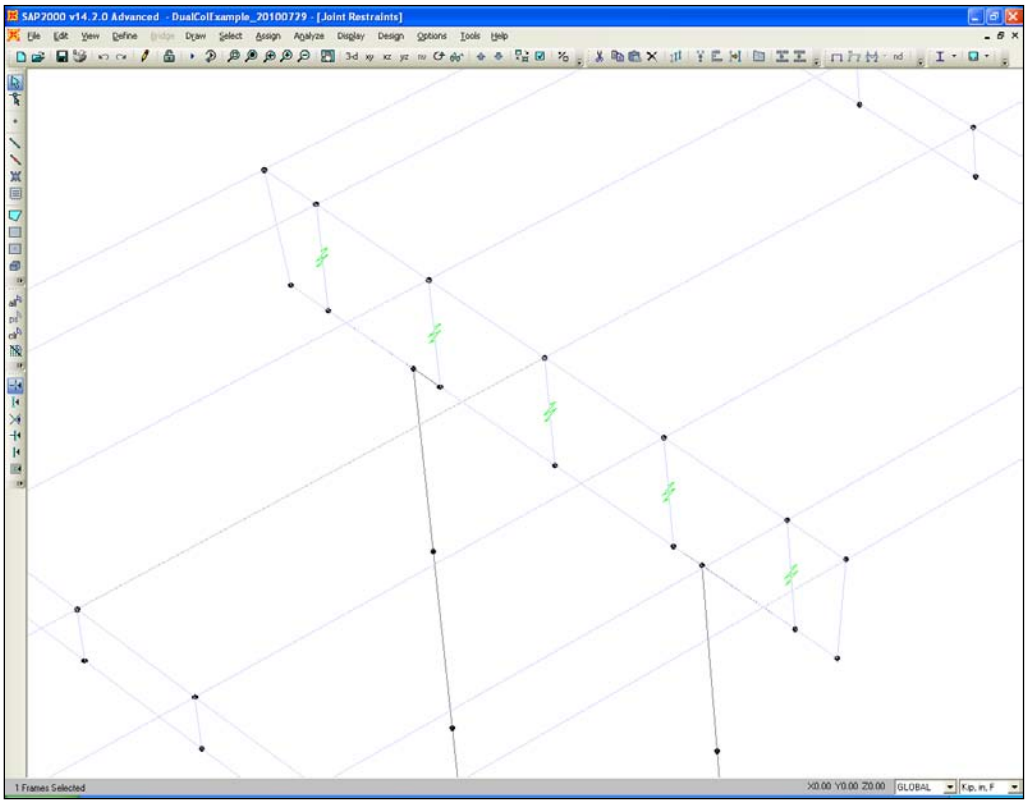

Wireframe 3-D View of Bent and Superstructure Intersection
Figure 2.6-3

The superstructure is broken into five segments per span. Section 5.4.3 of the *AASHTO Guide Specifications for LRFD Seismic Bridge Design* requires that a minimum of four segments per span be used.

2.7 Gravity Load Patterns

There are three dead load patterns in the model: “DC-Structure”, “DC-Barriers”, and “DW-Overlay”. The “DC-Structure” case includes the self weight of the structural components. The “DC-Barriers” case includes the dead load of the barriers, which is applied as an area load to the outermost deck shells. The “DW-Overlay” case includes the future overlay loads applied to the deck shells. The dead load pattern definitions are shown Figure 2.7-1 (**Define menu > Load Patterns**).

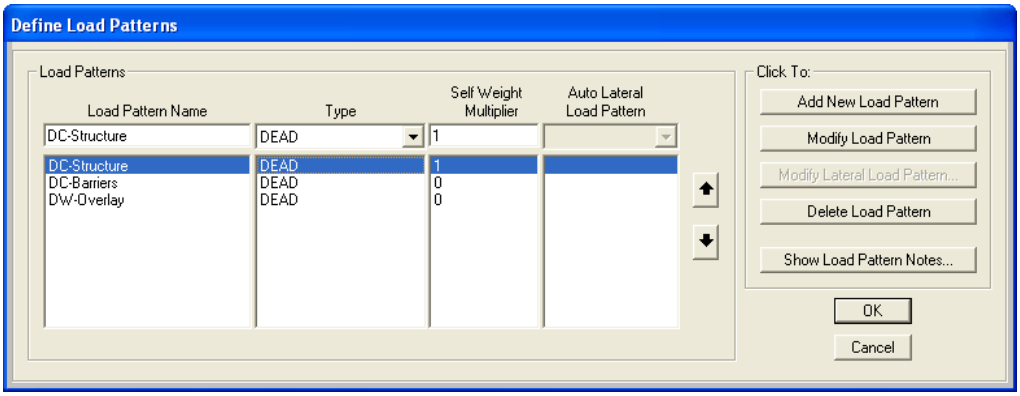

Dead Load Pattern Definitions
Figure 2.7-1

The designer should verify the weight of the structure in the model with hand calculations.

3. Displacement Demand Analysis

3.1 Modal Analysis

3.1.1 Mass Source

All of the dead loads are considered as contributing mass for the modal load case. A display of the mass source definition window from SAP2000 is shown in Figure 3.1.1-1 (**Define menu > Mass Source**).

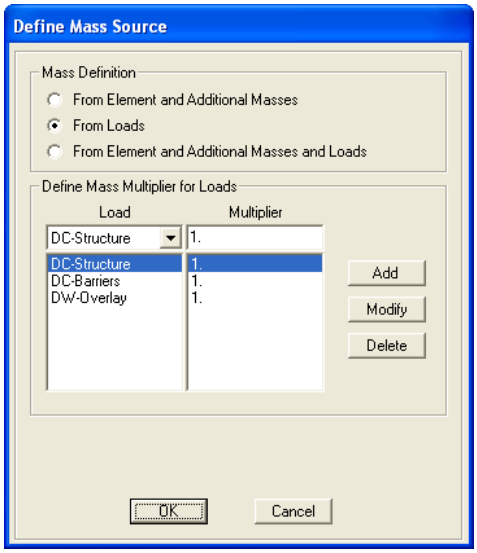

Mass Source Definition
Figure 3.1.1-1

3.1.2 Cracking of Columns

Section 5.6 of the *AASHTO Guide Specifications for LRFD Seismic Bridge Design* provides diagrams that can be used to determine the cracked section properties of the columns. However, SAP2000's Section Designer can be used to compute the effective section properties. If using Section Designer, the designer should verify that the method of calculation conforms to *AASHTO Guide Specifications of LRFD Seismic Bridge Design*. The column axial dead load at mid-height is approximately 1,250 kips without including the effects of the construction staging. For the bridge in this example, the inclusion of staging effects would cause the axial load in the columns to vary by less than ten percent. Such a small change in axial load would not significantly alter the results of this analysis. However, there are situations where the inclusion of construction sequence effects will significantly alter the analysis. Therefore, engineering judgment should be used when decided whether or not to include the effects of staging. By having Section Designer perform a moment-curvature analysis on the column section with an axial load of 1,250 kips, it is found that ICrack = 212,907 inch^4. The gross moment of inertia is 628,044 inch^4 (as calculated by SAP2000). Therefore, the ratio is 212,907/628,044 = 0.34. The moment-curvature analysis is shown in Figure 3.1.2-1 (**Define menu > Section Properties > Frame Sections > *select* COL > *click* Modify/Show Property *button* > *click* Section Designer *button* > Display menu > Show Moment-Curvature Curve**).

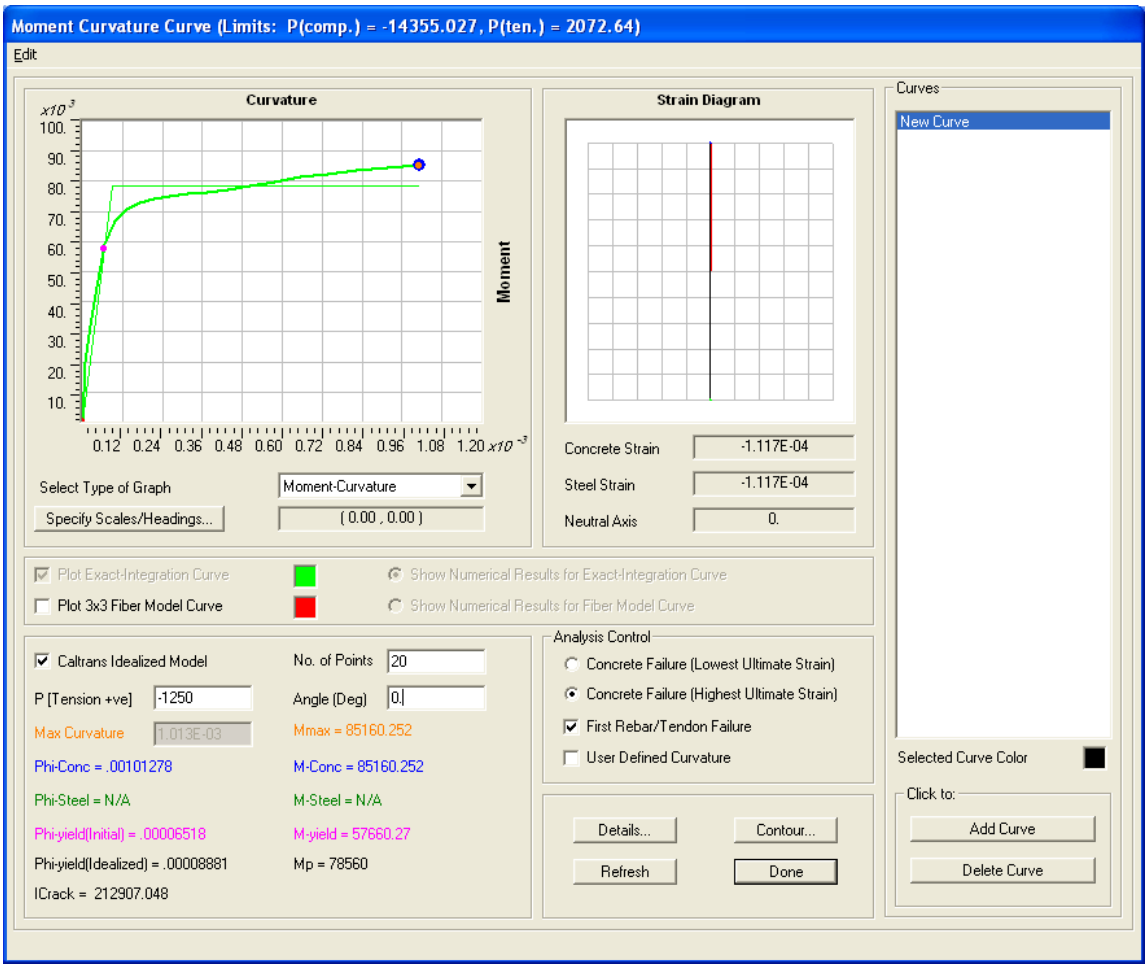

Moment Curvature Curve for Frame Section "COL" at P = -1250 kips
Figure 3.1.2-1

It can be seen in Figure 3.1.2-1 that concrete strain capacity limits the available plastic curvature. Designers should verify that SAP2000's bilinearization is acceptable. The property modifiers are then applied to the column frame elements as shown in Figure 3.1.2-2 (**Assign menu > Frame > Property Modifiers**).

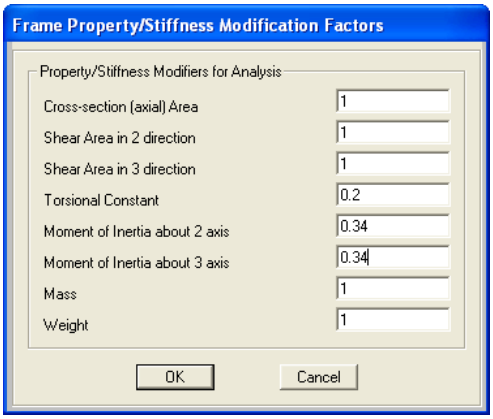

Frame Property Modification Factor for Column Frame Elements
Figure 3.1.2-2

The torsional constant modifier is 0.2 for columns as required by Section 5.6.5 of the *AASHTO Guide Specifications for LRFD Seismic Bridge Design*.

3.1.3 Load Case Setup

The "MODAL" load case uses Ritz vectors and is defined in SAP2000 as shown in Figure 3.1.3-1 (**Define menu > Load Cases > *select* MODAL > *click* Modify/Show Load Case *button***).

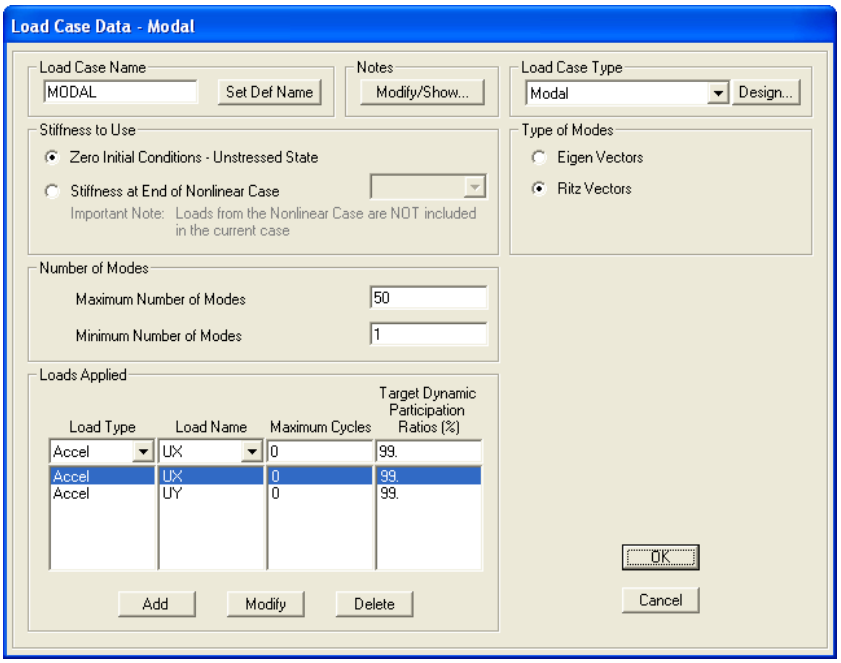

Load Case Data for Load Case "MODAL"
Figure 3.1.3-1

3.1.4 Verification of Mass Participation

Section 5.4.3 of the *AASHTO Guide Specifications for LRFD Seismic Bridge Design* requires a minimum of 90% mass participation in both directions. For this example, the mass is considered to be the same in both directions even though the end diaphragms are free in the longitudinal direction and restrained in the transverse direction. By displaying the *Modal Participating Mass Ratios* table for the "MODAL" load case it is found that the X-direction (longitudinal) reaches greater than 90% mass participation on the first mode shape, while the Y-direction (transverse) reaches greater than 90% mass participation by the seventeenth mode shape. This implies that the minimum code requirements could be met by including only seventeen mode shapes. The *Modal Participating Mass Ratios* table is shown in Figure 3.1.4-1 (**Display menu > Show Tables > *check* Modal Participating Mass Ratios > *click* OK *button***).

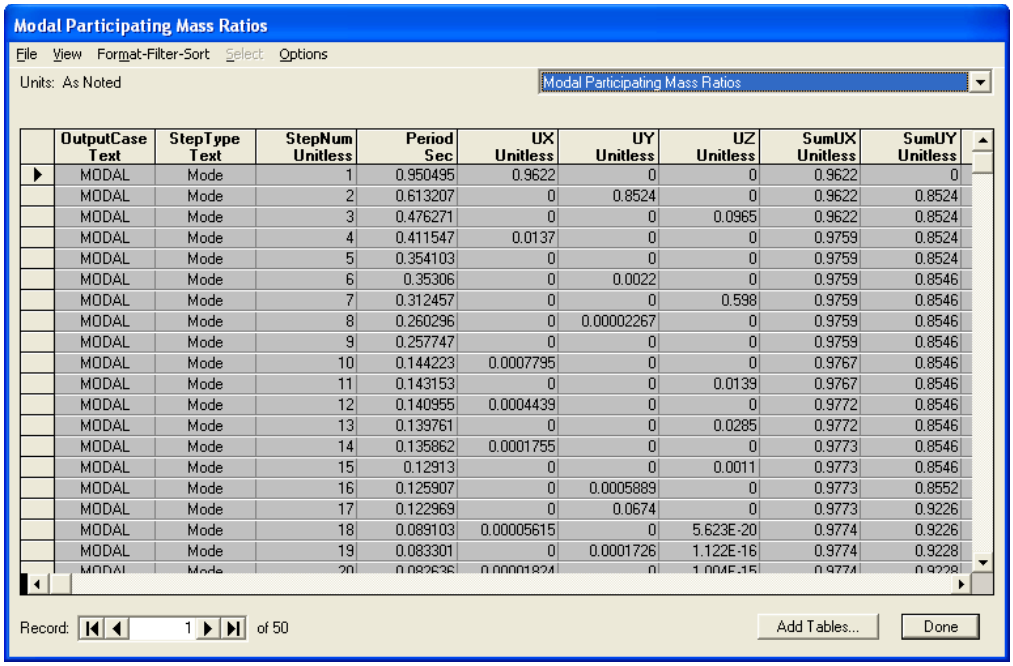

Modal Participating Mass Ratios

File View Format-Filter-Sort Select Options

Units: As Noted — Modal Participating Mass Ratios

	OutputCase Text	StepType Text	StepNum Unitless	Period Sec	UX Unitless	UY Unitless	UZ Unitless	SumUX Unitless	SumUY Unitless
▶	MODAL	Mode	1	0.950495	0.9622	0	0	0.9622	0
	MODAL	Mode	2	0.613207	0	0.8524	0	0.9622	0.8524
	MODAL	Mode	3	0.476271	0	0	0.0965	0.9622	0.8524
	MODAL	Mode	4	0.411547	0.0137	0	0	0.9759	0.8524
	MODAL	Mode	5	0.354103	0	0	0	0.9759	0.8524
	MODAL	Mode	6	0.35306	0	0.0022	0	0.9759	0.8546
	MODAL	Mode	7	0.312457	0	0	0.598	0.9759	0.8546
	MODAL	Mode	8	0.260296	0	0.00002267	0	0.9759	0.8546
	MODAL	Mode	9	0.257747	0	0	0	0.9759	0.8546
	MODAL	Mode	10	0.144223	0.0007795	0	0	0.9767	0.8546
	MODAL	Mode	11	0.143153	0	0	0.0139	0.9767	0.8546
	MODAL	Mode	12	0.140955	0.0004439	0	0	0.9772	0.8546
	MODAL	Mode	13	0.139761	0	0	0.0285	0.9772	0.8546
	MODAL	Mode	14	0.135862	0.0001755	0	0	0.9773	0.8546
	MODAL	Mode	15	0.12913	0	0	0.0011	0.9773	0.8546
	MODAL	Mode	16	0.125907	0	0.0005889	0	0.9773	0.8552
	MODAL	Mode	17	0.122969	0	0.0674	0	0.9773	0.9226
	MODAL	Mode	18	0.089103	0.00005615	0	5.623E-20	0.9774	0.9226
	MODAL	Mode	19	0.083301	0	0.0001726	1.122E-16	0.9774	0.9228
	MODAL	Mode	20	0.082636	0.00001824	0	1.004E-15	0.9774	0.9228

Record: 1 of 50 — Add Tables... — Done

Modal Participating Mass Ratios for Load Case "MODAL"

Figure 3.1.4-1

Figure 3.1.4-1 also shows that the first mode in the X-direction (longitudinal) has a period of 0.95 seconds and the first mode in the Y-direction (transverse) has period of 0.61 seconds. The designer should verify fundamental periods with hand calculations. The designer should also visually review the primary mode shapes to verify they represent realistic behavior.

3.2 Response-Spectrum Analysis

3.2.1 Seismic Hazard

The bridge is located in Redmond, Wash. The mapped spectral acceleration coefficients are:

$PGA = 0.396$ g
$S_s = 0.883$ g
$S_1 = 0.294$ g

A site class of E is assumed for this example and the site coefficients are:

$F_{PGA} = 0.91$
$F_a = 1.04$
$F_v = 2.82$

Therefore, the response-spectrum is generated using the following parameters:

$A_s = F_{PGA}*PGA = 0.361$ g
$S_{DS} = F_a*S_s = 0.919$ g
$S_{D1} = F_v*S_1 = 0.830$ g

Since S_{D1} is greater than or equal to 0.50, per Table 3.5-1 of the *AASHTO Guide Specifications for LRFD Seismic Bridge Design* the Seismic Design Category is D.

3.2.2 Response-Spectrum Input

The spectrum is defined from a file created using the AASHTO Earthquake Ground Motion Parameters tool. A screen shot of the response-spectrum as inputted in SAP2000 is shown in Figure 3.2.2-1 (**Define menu > Functions > Response Spectrum > *select* SC-E > *click* Show Spectrum *button***).

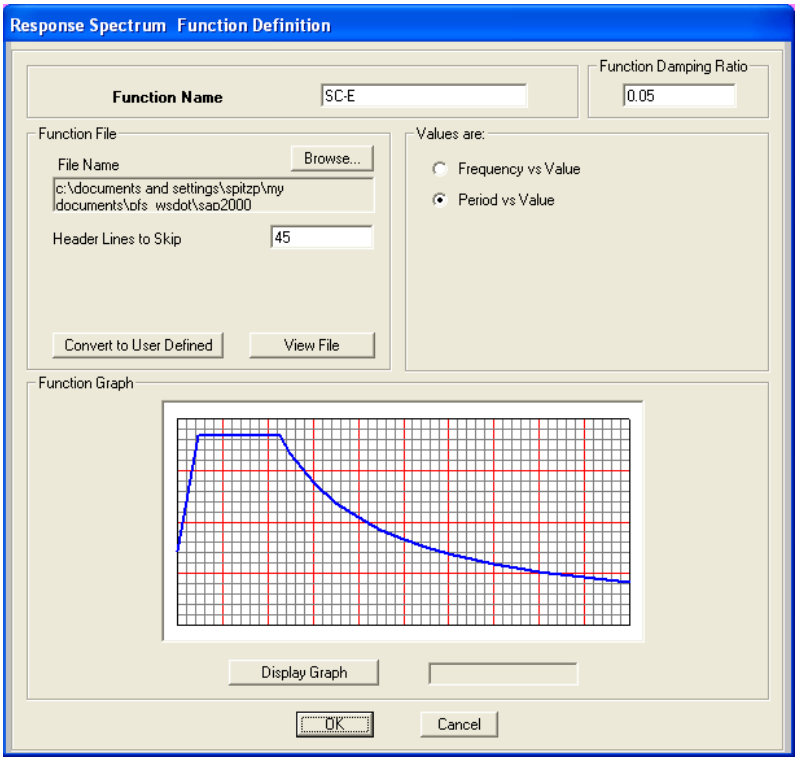

Response Spectrum Function Definition from File for Function "SC-E"
Figure 3.2.2-1

When the **Convert to User Defined** button is clicked, the function appears as shown in Figure 3.2.2-2.

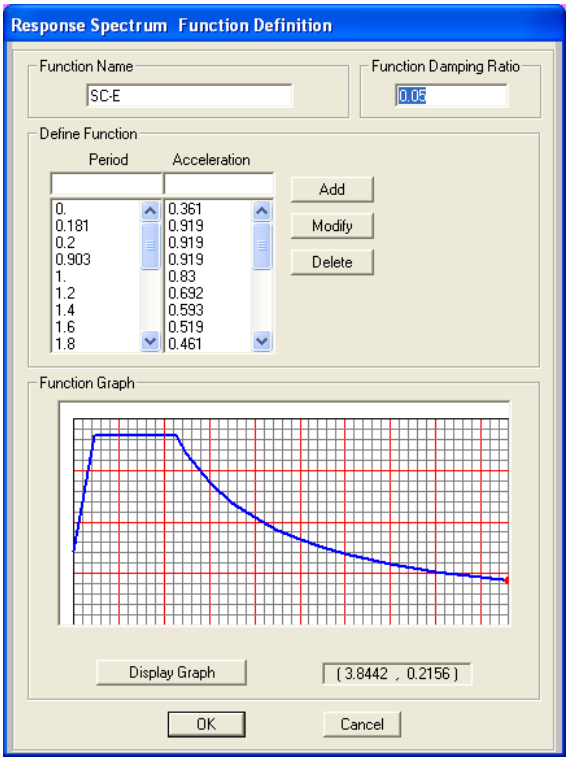

Response Spectrum Function Definition for Function "SC-E"
Figure 3.2.2-2

Having the response-spectrum function stored as "User Defined" is advantageous because the data is stored within the .SDB file. Therefore, if the .SDB file is transferred to a different location (different computer), the response-spectrum function will also be moved.

3.2.3 Load Case Setup

Two response-spectrum analysis cases are setup in SAP2000: one for each orthogonal direction.

3.2.3.1 Longitudinal Direction

The load case data for the X-direction is shown in Figure 3.2.3.1-1 (**Define menu > Load Cases > *select* EX > *click* Modify/Show Load Case *button***).

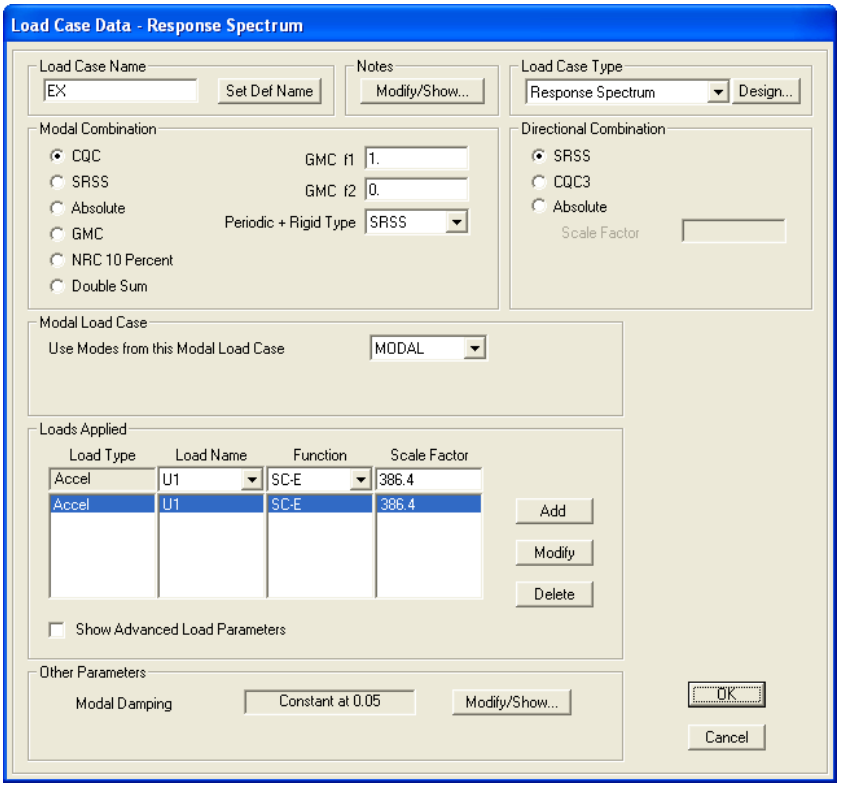

Load Case Data for Load Case "EX"
Figure 3.2.3.1-1

3.2.3.2 Transverse Direction

The load case data for the Y-direction is shown Figure 3.2.3.2-1 (**Define menu > Load Cases > *select* EY > *click* Modify/Show Load Case *button***).

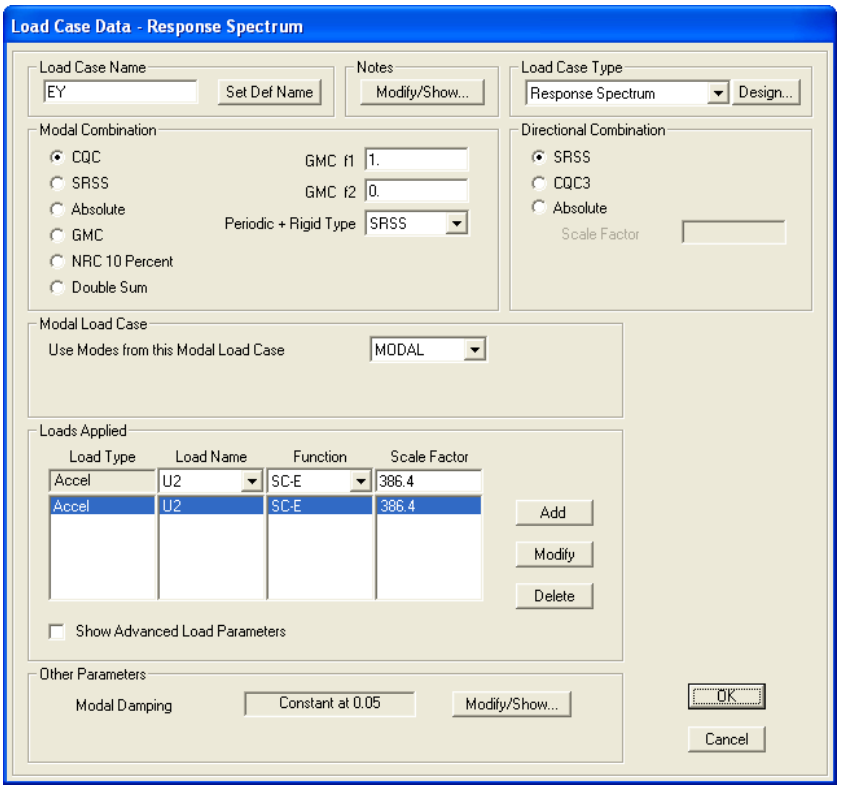

Load Case Data for Load Case "EY"
Figure 3.2.3.2-1

3.2.4 Response-Spectrum Displacements

The column displacements in this example are tracked at Joint 33, which is located at the top of a column. Since the bridge is symmetric, all of the columns have the same displacements in the response-spectrum analyses.

3.2.4.1 Longitudinal Direction

The horizontal displacements at the tops of the columns from the EX analysis case are U1 = 7.48 inches and U2 = 0.00 inches. This is shown in Figure 3.2.4.1-1 as displayed in SAP2000 (**Display menu > Show Deformed Shape > *select* EX > *click* OK *button***).

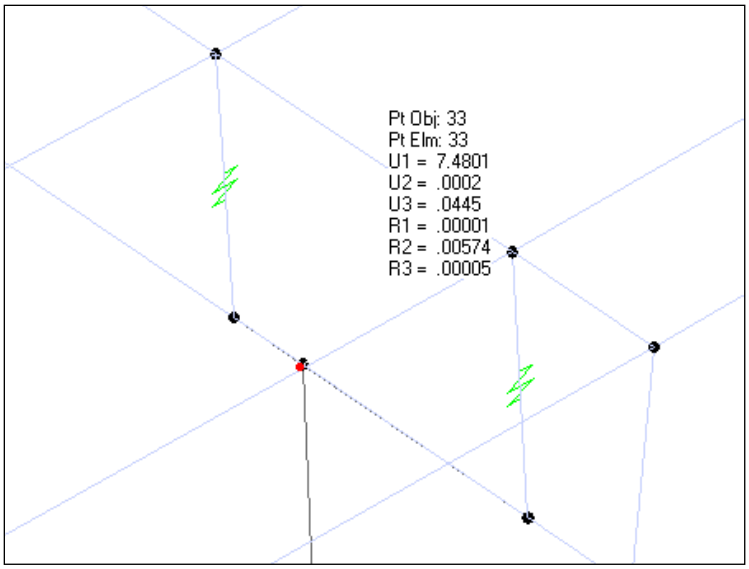

Joint Displacement at Joint 33 for Load Case "EX"
Figure 3.2.4.1-1

3.2.4.2 Transverse Direction

The horizontal displacements at the tops of the columns from the EY analysis case are U1 = 0.17 inches and U2 = 3.55 inches. This is shown in Figure 3.2.4.2-1 as displayed in SAP2000 (**Display menu > Show Deformed Shape >** ***select*** **EY >** ***click*** **OK** ***button***).

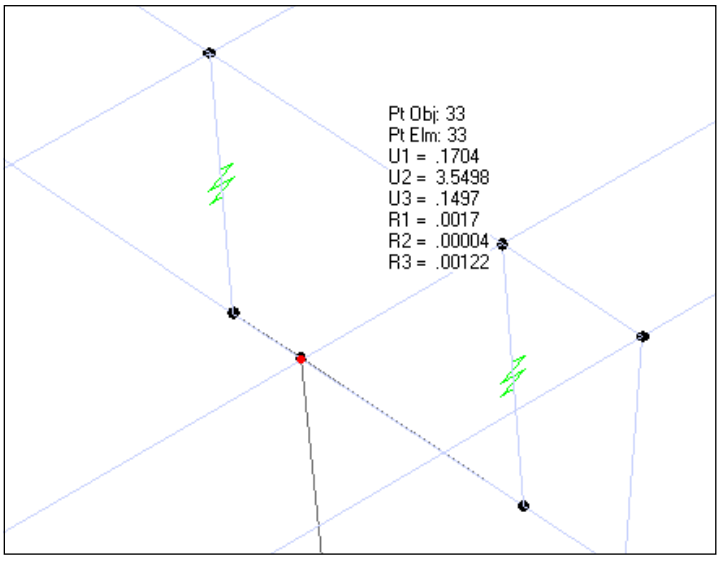

Joint Displacement at Joint 33 for Load Case "EY"
Figure 3.2.4.2-1

3.3 Displacement Demand

3.3.1 Displacement Magnification

Displacement magnification must be performed in accordance with Section 4.3.3 of the *AASHTO Guide Specifications for LRFD Seismic Bridge Design*.

Compute T_s and T^*:

T_s = S_{D1} / S_{DS}
= 0.830 / 0.919
= 0.903 sec.

T^* = 1.25 T_s
= 1.25 * 0.903
= 1.13 sec.

3.3.1.1 Longitudinal Direction

Compute magnification for the X-direction (Longitudinal):

T_{Long} = 0.95 sec. (see section 3.1.4)

T^* / T_{Long} = 1.13 / 0.95
= 1.19 > 1.0 => Magnification is required

R_{d_Long} = $(1 - 1/\mu_D) * (T^* / T) + 1 / \mu_D$
= (1 – 1/6) * (1.19) + 1/6 (Assume $\mu_D = 6$)
= 1.16

3.3.1.2 Transverse Direction

Compute magnification for the Y-direction (Transverse):

T_{Trans} = 0.61 sec. (see section 3.1.4)

T^* / T_{Trans} = 1.13 / 0.61
= 1.85 > 1.0 => Magnification is required

R_{d_Trans} = $(1 - 1/\mu_D) * (T^* / T) + 1 / \mu_D$
= (1 – 1/6) * (1.85) + 1/6 (Assume $\mu_D = 6$)
= 1.71

3.3.2 Column Displacement Demand

Section 4.4 of the *AASHTO Guide Specifications for LRFD Seismic Bridge Design* requires that 100% plus 30% of the displacements from each orthogonal seismic load case be combined to determine the displacement demands. The displacements are tracked as Joint 33, which is located at the top of a column.

3.3.1.1 Longitudinal Direction

For the X-direction (100EX + 30EY):

UX (due to EX) = 7.48 in.

UX (due to EY) = 0.17 in.

Therefore,

$$\Delta^{L}_{D\_Long} = 1.0 * R_{d\_Long} * 7.48 + 0.3 * R_{d\_Trans} * 0.17$$
$$= 1.0 * 1.16 * 7.48 + 0.3 * 1.71 * 0.17$$
$$= 8.76 \text{ in.} \Rightarrow \text{This is the displacement demand for the X-Dir}$$

3.3.1.2 Transverse Direction

For the Y-direction (100EY + 30EX):

UY (due to EY) = 3.55 in.

UY (due to EX) = 0.00 in.

Therefore,

$$\Delta^{L}_{D\_Trans} = 1.0 * R_{d\_Trans} * 3.55 + 0.3 * R_{d\_Long} * 0.00$$
$$= 1.0 * 1.71 * 3.55 + 0.3 * 1.16 * 0.00$$
$$= 6.07 \text{ in.} \Rightarrow \text{This is the Displacement Demand for the Y-Dir}$$

4. Displacement Capacity Analysis

4.1 Plastic Hinge Definitions and Assignments

4.1.1 Column Inflection Points

The tops and bottoms of all columns have enough moment fixity in all directions to cause plastic hinging, which means the columns will exhibit behavior similar to a fixed-fixed column. The plastic moment capacities of the columns under dead loads will be used to approximate the location of the column inflection points. Therefore, the axial loads (due to dead load) at the top and bottom of the columns must be determined. Due to the symmetry of the bridge in this example, the axial loads are the same for all of the columns, which will not be true for most bridges. Figure 4.1.1-1 shows the axial force diagram for the DC+DW load case as displayed in SAP2000 (**Display menu > Show Forces/Stresses > Frames/Cables > *select* DC+DW > *select* Axial Force > *click* OK *button***).

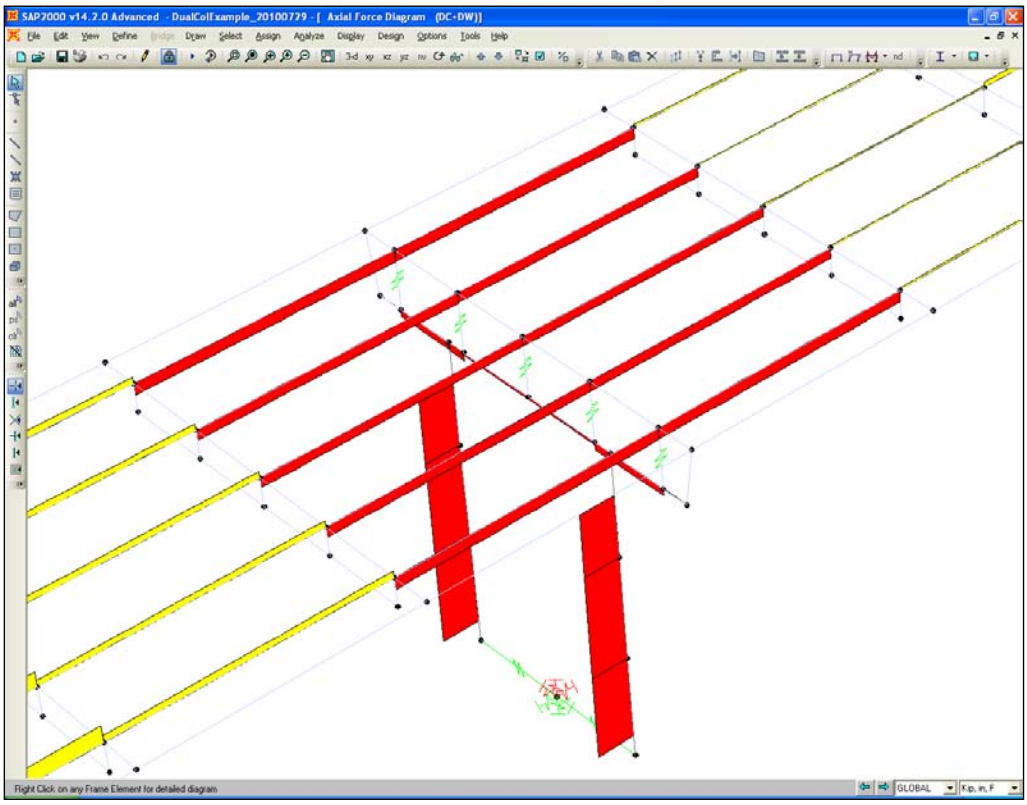

Frame Axial Force Diagram for Load Case "DC+DW"
Figure 4.1.1-1

From the axial loads displayed for the DC+DW load case it is determined that the axial force at the bottom of the column is approximately 1,290 kips and the axial force at the top of the column is approximately 1,210 kips (see section 3.1.2 of this example for a discussion on the inclusion of construction sequence effects on column axial loads). It is expected that the difference in axial load between the tops and bottoms of the columns will not result in a significant difference in the plastic moment. However, on some bridges the axial loads at the tops and bottoms of the columns may be substantially different or the column section may vary along its height producing significantly different plastic moments at each end.

The moment-curvature analysis of the column base is shown in Figure 4.1.1-2 (**Define menu > Section Properties > Frame Sections > *select* COL > *click* Modify/Show Property *button* > *click* Section Designer *button* > Display menu > Show Moment-Curvature Curve**).

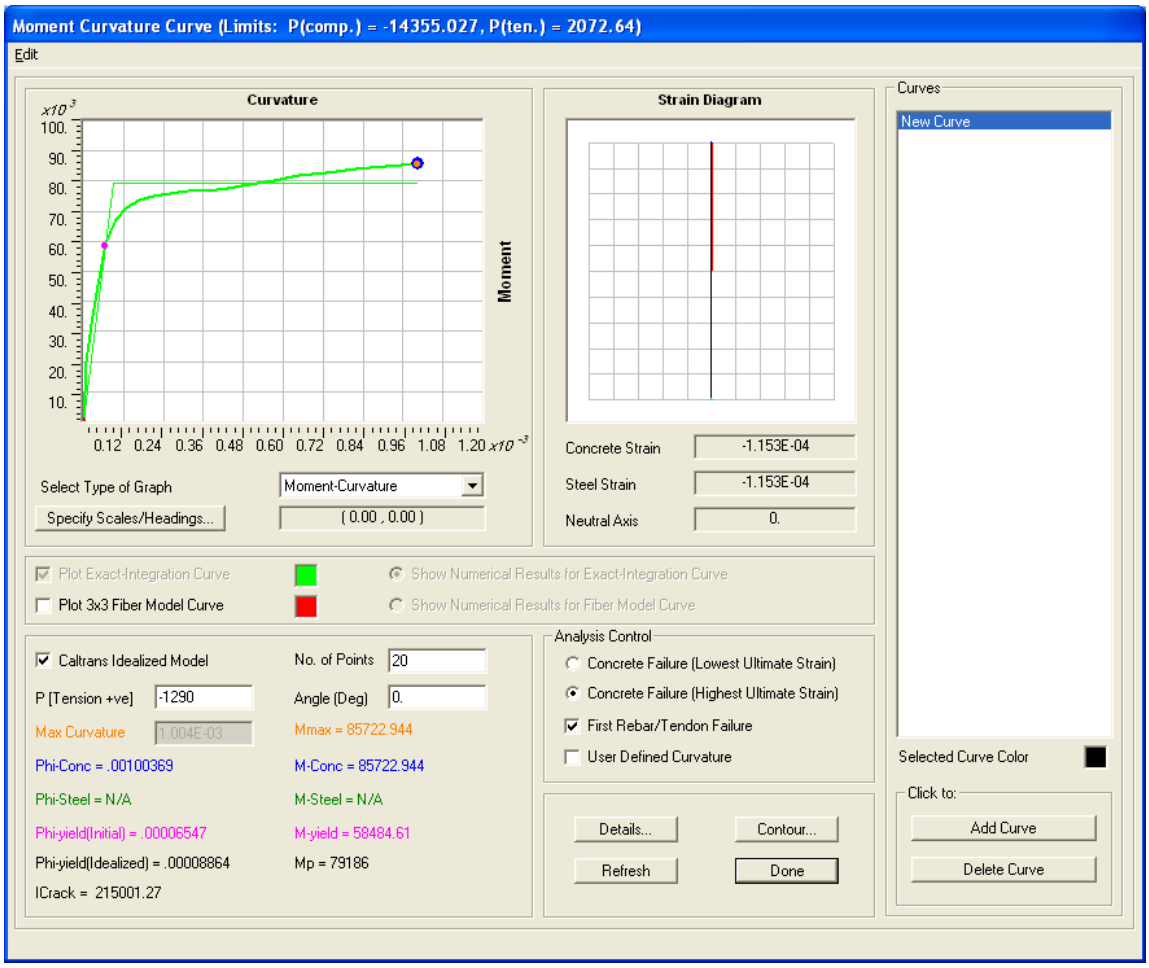

Moment Curvature Curve for Frame Section "COL" at P = -1290 kips
Figure 4.1.1-2

It is seen in Figure 4.1.1-2 that the plastic moment capacity at the base of the column is 79,186 kip-inches (with only dead load applied).

The moment-curvature analysis of the column top is shown in Figure 4.1.1-3 (**Define menu > Section Properties > Frame Sections > *select* COL > *click* Modify/Show Property *button* > *click* Section Designer *button* > Display menu > Show Moment-Curvature Curve**).

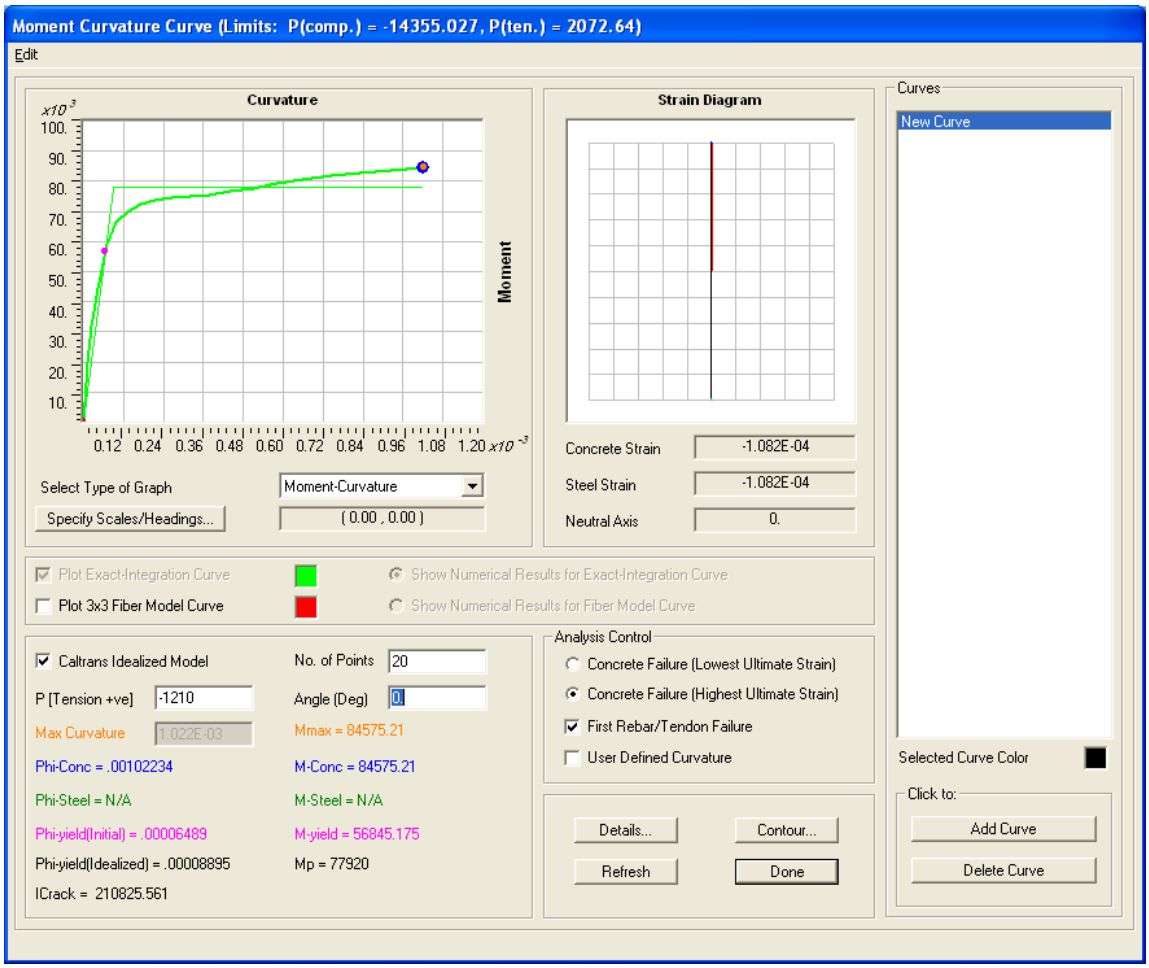

Moment Curvature Curve for Frame Section "COL" at P = -1210 kips
Figure 4.1.1-3

It is seen in Figure 4.1.1-3 that the plastic moment capacity at the top of the column is 77,920 kip-inches (with only dead load applied).

The clear height of the columns is 350 inches; therefore:

L_1 = Length from point of maximum moment at base of column to inflection point (in.)
= 350 x $M_{p\_col\_base}$ / ($M_{p\_col\_base}$ + $M_{p\_col\_top}$)
= 350 x 79186 / (79186 + 77920)
= 176 in.

L_2 = Length from point of maximum moment at top of column to inflection point (in.)
= 350 – L_1
= 350 – 176
= 174 in.

4.1.2 Plastic Hinge Lengths

The plastic hinge lengths must be computed at both the tops and bottoms of the columns using the equations in Section 4.11.6 of the *AASHTO Guide Specifications for LRFD Seismic Bridge Design*. The hinge length is computed as follows:

$$L_p = 0.08L + 0.15f_{ye}d_{bl} \geq 0.3f_{ye}d_{bl}$$

Where:

L = length of column from point of maximum moment to the point of moment contraflexure (in.)
= L_1 at the base of the columns ($L_{1Long} = L_{1Trans} = 176$ in.)
= L_2 at the top of the columns ($L_{2Long} = L_{2Trans} = 174$ in.)

f_{ye} = expected yield strength of longitudinal column reinforcing steel bars (ksi)
= 68 ksi (ASTM A706 bars).

d_{bl} = nominal diameter of longitudinal column reinforcing steel bars (in.)
= 1.27 in. (#10 bars)

L_{p1} = Plastic hinge length at base of column
$= 0.08*176 + 0.15*68*1.27 \geq 0.3*68*1.27$
$= 27.03 \geq 25.91$
= 27.0 in.

L_{p2} = Plastic hinge length at top of column
$= 0.08*174 + 0.15*68*1.27 \geq 0.3*68*1.27$
$= 26.87 \geq 25.91$
= 26.9 in.

In this example, the plastic hinge lengths in both directions are the same because the locations of the inflection points in both directions are the same. This will not always be the case, such as when there is a single column bent.

4.1.3 Assign Plastic Hinges

In order to assign the plastic hinges to the column elements, the relative locations of the plastic hinges along the column frame elements must be computed.

For the bases of the columns:

Relative Length = [Footing Offset + (Hinge Length / 2)] / Element Length
= [30 + (27.0 / 2)] / 146
= 0.30

For the tops of the columns:

Relative Length = [Element Length – Xbeam Offset – (Hinge Length / 2)] / Element Length
= [146 – 58 – (26.9 / 2)] / 146
= 0.51

The hinges at the bases of the columns are assigned at relative distances as shown in Figure 4.1.3-1 (**Assign menu > Frame > Hinges**).

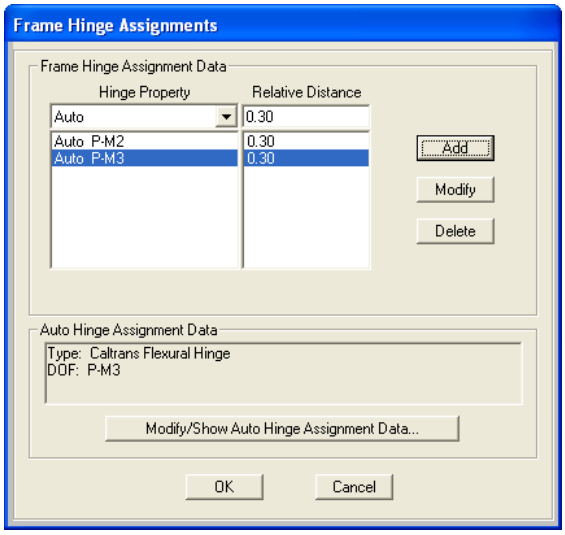

Frame Hinge Assignments for Column Bases
Figure 4.1.3-1

By selecting the **Auto P-M3** Hinge Property in Figure 4.1.3-1 and clicking the **Modify/Show Auto Hinge Assignment Data** button, the window shown in Figure 4.1.3-2 opens. Figure 4.1.3-2 shows the *Auto Hinge Assignment Data* form with input parameters for the hinges at the bases of the columns in the longitudinal direction. Due to the orientation of the frame element local axes, the P-M3 hinge acts in the longitudinal direction.

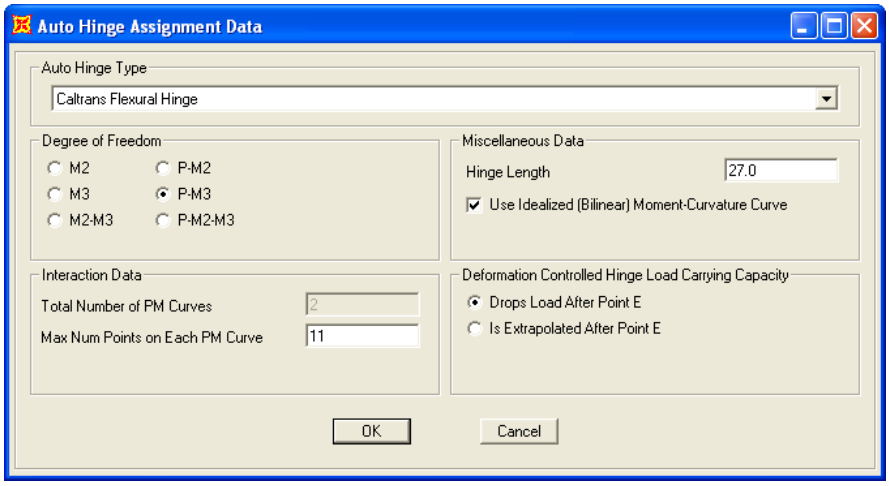

Auto Hinge Assignment Data for Column Bases in Longitudinal Direction
Figure 4.1.3-2

By selecting the **Auto P-M2** Hinge Property in Figure 4.1.3-1 and clicking the **Modify/Show Hinge Assignment Data** button in Figure 4.1.3-1, the window shown in Figure 4.1.3-3 opens. Figure 4.1.3-3 shows the *Auto Hinge Assignment Data* form with input parameters for the hinges at the bases of the columns in the transverse direction. Due to the orientation of the frame element local axes, the P-M2 hinge acts in the transverse direction.

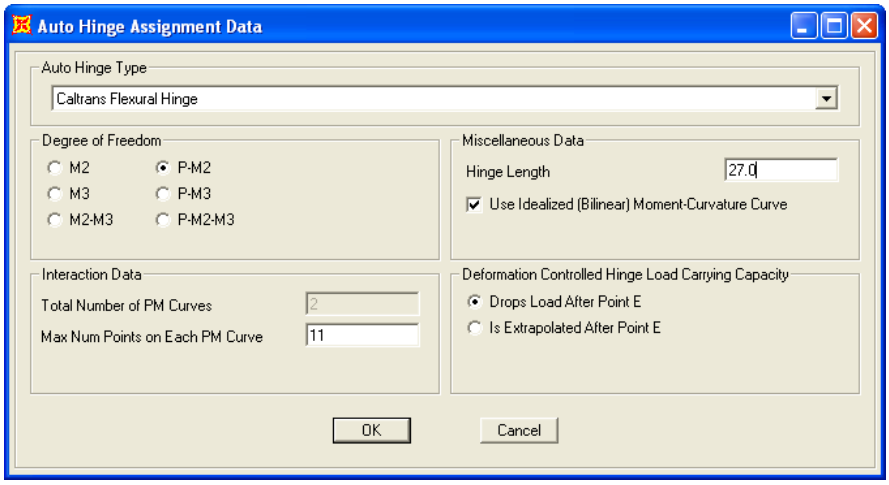

Auto Hinge Assignment Data for Column Bases in Transverse Direction
Figure 4.1.3-3

In Figures 4.1.3-2 and 4.1.3-3 it is seen that the *Hinge Length* is set to **27.0** inches, the **Use Idealized (Bilinear) Moment-Curvature Curve** box is checked, and the **Drops Load After Point E** option is selected.

The hinges at the tops of the columns are assigned at relative distances as shown in Figure 4.1.3-4 (**Assign menu > Frame > Hinges**).

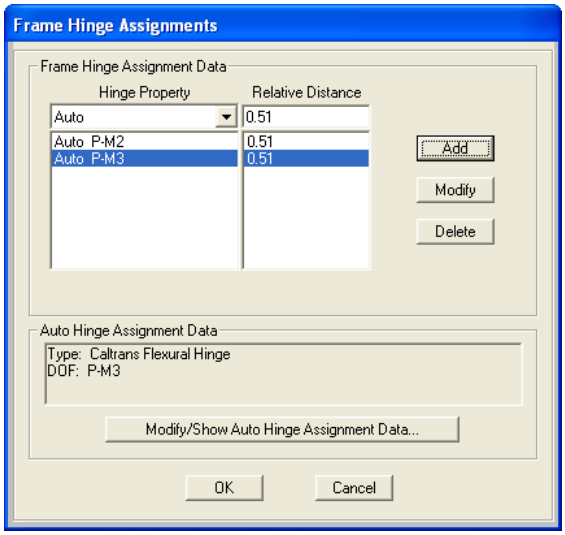

Frame Hinge Assignments for Column Tops
Figure 4.1.3-4

By selecting the **Auto P-M3** Hinge Property in Figure 4.1.3-4 and clicking the **Modify/Show Auto Hinge Assignment Data** button, the window shown in Figure 4.1.3-5 opens. Figure 4.1.3-5 shows the *Auto Hinge Assignment Data* form with input parameters for the hinges at the tops of the columns in the longitudinal direction. Due to the orientation of the frame element local axes, the P-M3 hinge acts in the longitudinal direction.

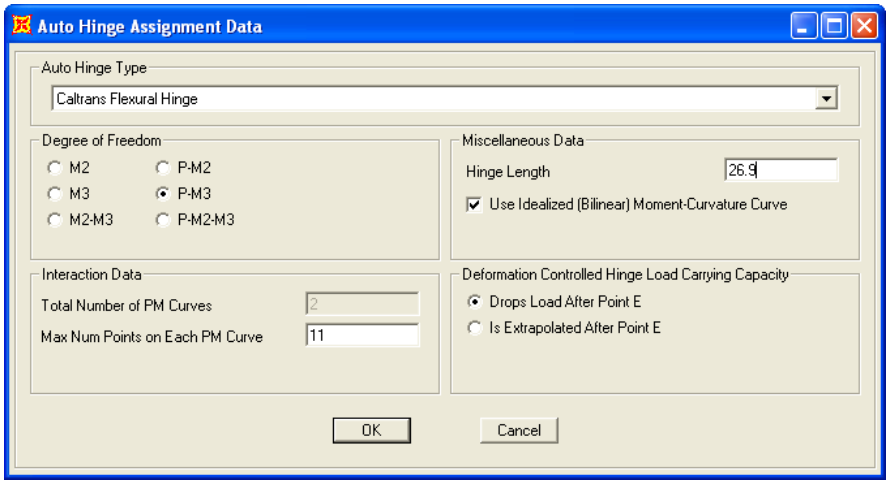

Auto Hinge Assignment Data for Column Tops in Longitudinal Direction
Figure 4.1.3-5

By selecting the **Auto P-M2** Hinge Property in Figure 4.1.3-4 and clicking the **Modify/Show Hinge Assignment Data** button, the window shown in Figure 4.1.3-6 opens. Figure 4.1.3-6 shows the *Auto Hinge Assignment Data* form with input parameters for the hinges at the tops of the columns in the transverse direction. Due to the orientation of the frame element local axes, the P-M2 hinge acts in the transverse direction.

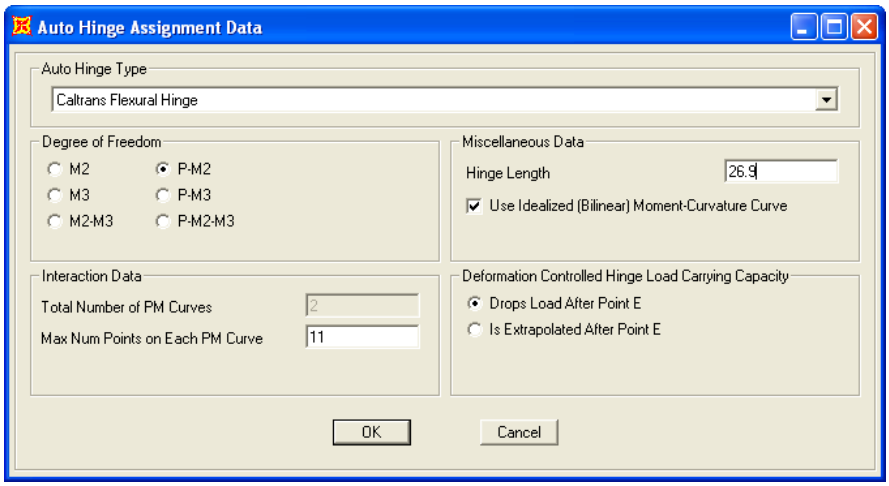

Auto Hinge Assignment Data for Column Tops in Transverse Direction
Figure 4.1.3-6

In Figures 4.1.3-5 and 4.1.3-6 it is seen that the *Hinge Length* is set to **26.9** inches, the **Use Idealized (Bilinear) Moment-Curvature Curve** box is checked, and the **Drops Load After Point E** option is selected.

4.2 Pushover Analysis

4.2.1 Lateral Load Distributions

4.2.1.1 Longitudinal Direction

The lateral load distribution used in this example for the pushover analysis in the longitudinal direction is a direct horizontal acceleration on the structure mass. Also, the dead load can be applied as previously defined since the entire structure is present during the pushover analysis. It should be noted that a lateral load distribution proportional to the fundamental mode shape in the longitudinal direction is also acceptable provided that at least 75% of the structure mass participates in the mode. This recommendation is derived from provisions in *FEMA 356: Prestandard and Commentary for the Seismic Rehabilitation of Buildings*.

4.2.1.2 Transverse Direction

The lateral load distribution used in this example for the pushover analysis in the transverse direction consists of a horizontal load applied at the equivalent of the centroid of the superstructure. This load distribution is used to mimic a direct horizontal acceleration on the superstructure mass. The load is applied this way because the bent is isolated using staged construction and the superstructure is not present for the transverse pushover load case. As mentioned above, a lateral load distribution proportional to the fundamental mode shape in the transverse direction is also acceptable provided that at least 75% of the structure mass participates in the mode.

A special load pattern must be created for the column dead loads since the entire structure is not in place during the pushover analysis. A new load pattern called "Dead-Col_Axial" is added as shown in Figure 4.2.1.2-1 (**Define menu > Load Patterns**).



"Dead-Col_Axial" Load Pattern Definition
Figure 4.2.1.2-1

The column axial loads are 1,250 kips (average of top and bottom). The column dead load moments in the transverse direction are small and can be neglected. Figure 4.2.1.2-2 shows the joint forces assignment window for the "Dead-Col_Axial" load pattern (**Assign menu > Joint Loads > Forces**).

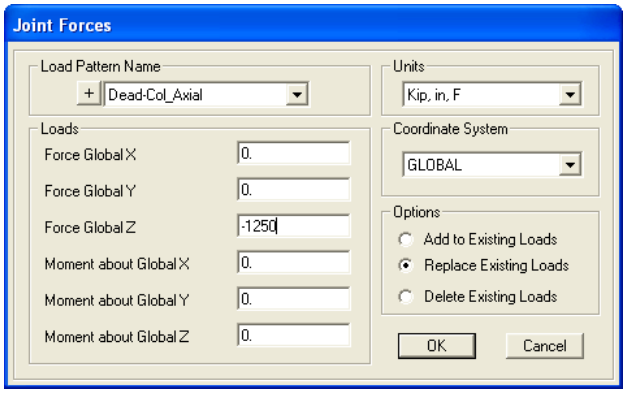

Joint Force Assignment for Load Pattern "Dead-Col_Axial"
Figure 4.2.1.2-2

After the forces defined in Figure 4.2.1.2-2 have been assigned, they can be viewed as shown in Figure 4.2.1.2-3.

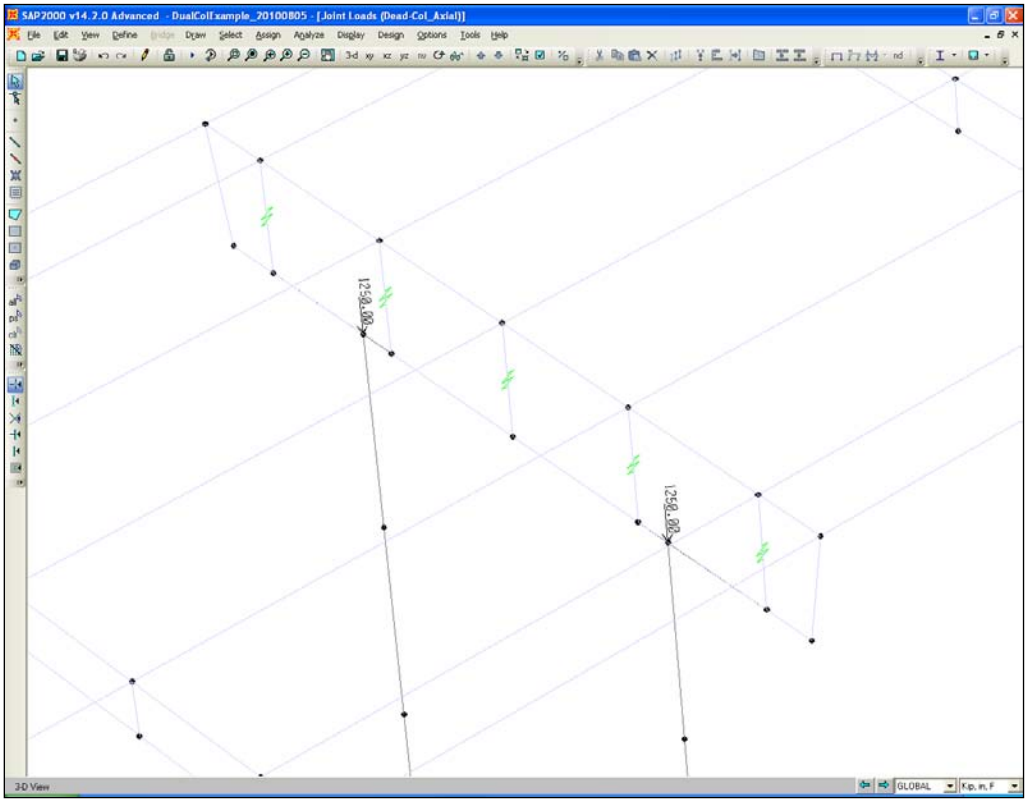

Wireframe View of Assigned Forces for Load Pattern "Dead-Col_Axial"
Figure 4.2.1.2-3

To define the transverse pushover analysis lateral load distribution, a new load pattern called "Trans_Push" is added as shown in Figure 4.2.1.2-4 (**Define menu > Load Patterns**).



"Trans_Push" Load Pattern Definition
Figure 4.2.1.2-4

Since the superstructure is not defined as a spine element, there is no joint in the plane of the bent located at the centroid of the superstructure. Therefore, the load distribution for the transverse pushover analysis is an equivalent horizontal load consisting of a point load and a moment applied at the center crossbeam joint. The centroid of the superstructure is located 58.83 inches above the center joint. As a result, a joint force with a horizontal point load of 100 kips and a moment of 100*58.83 = 5,883 kip-inches is used. Special care should be taken to ensure that the shear and moment are applied in the proper directions. The joint forces are assigned to the crossbeam center joint as shown in Figure 4.2.1.2-5 (**Assign menu > Joint Loads > Forces**).

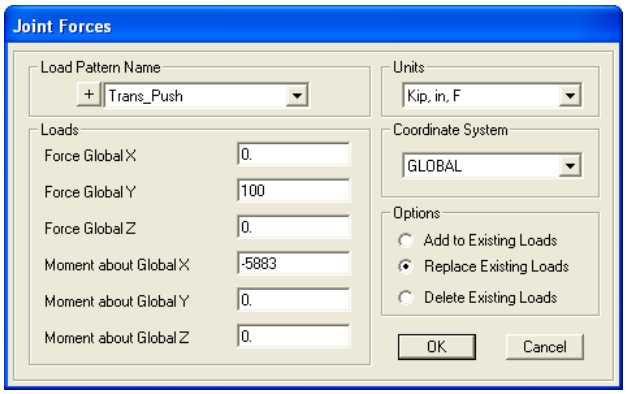

Joint Force Assignment for Load Pattern "Trans_Push"
Figure 4.2.1.2-5

After the forces defined in Figure 4.2.1.2-5 have been assigned, they can be viewed as shown in Figure 4.2.1.2-6.

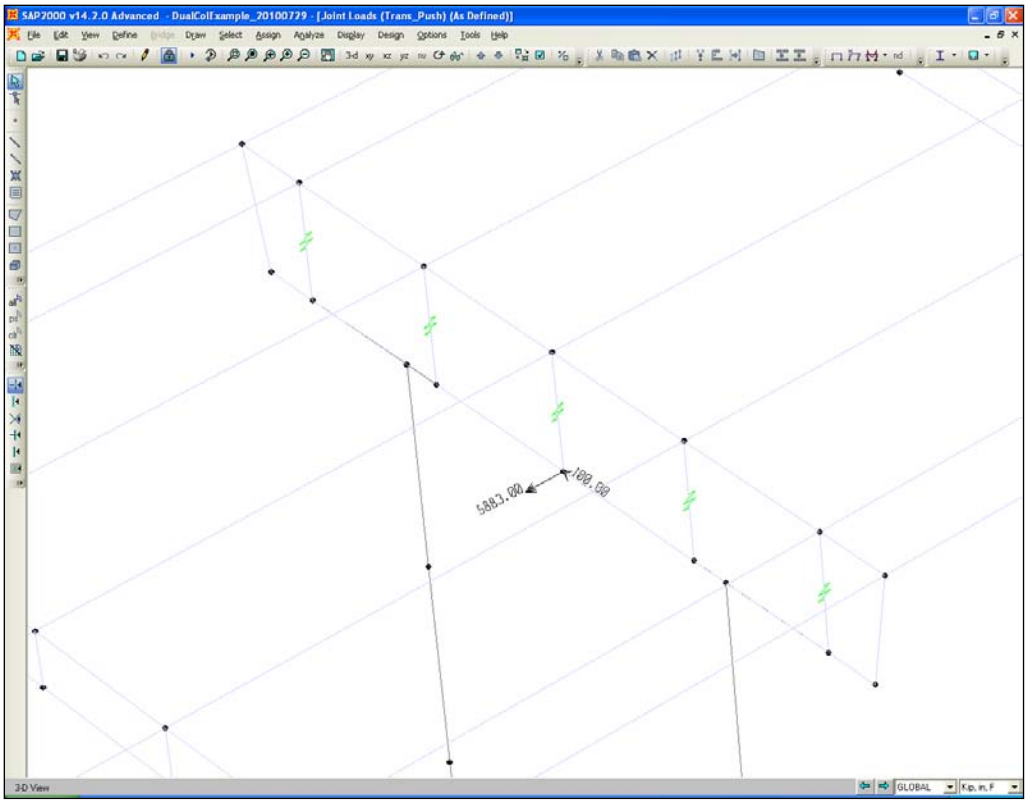

Wireframe View of Assigned Forces for Load Pattern "Trans_Push"
Figure 4.2.1.2-6

4.2.2 Load Case Setup

4.2.2.1 Longitudinal Direction

The dead load (DC+DW) must be applied prior to performing the pushover analysis. To do so in the longitudinal direction, a new load case is created called "LongPushSetup". In this load case, the dead load (DC+DW) is applied and the case is run as a nonlinear analysis. By running the load case as a nonlinear analysis type, another load case can continue from it with the loads stored in the structure.

The *Load Case Data* form for the "LongPushSetup" load case is shown in Figure 4.2.2.1-1 (**Define menu > Load Cases > *select* LongPushSetup > *click* Modify/Show Load Case *button***).

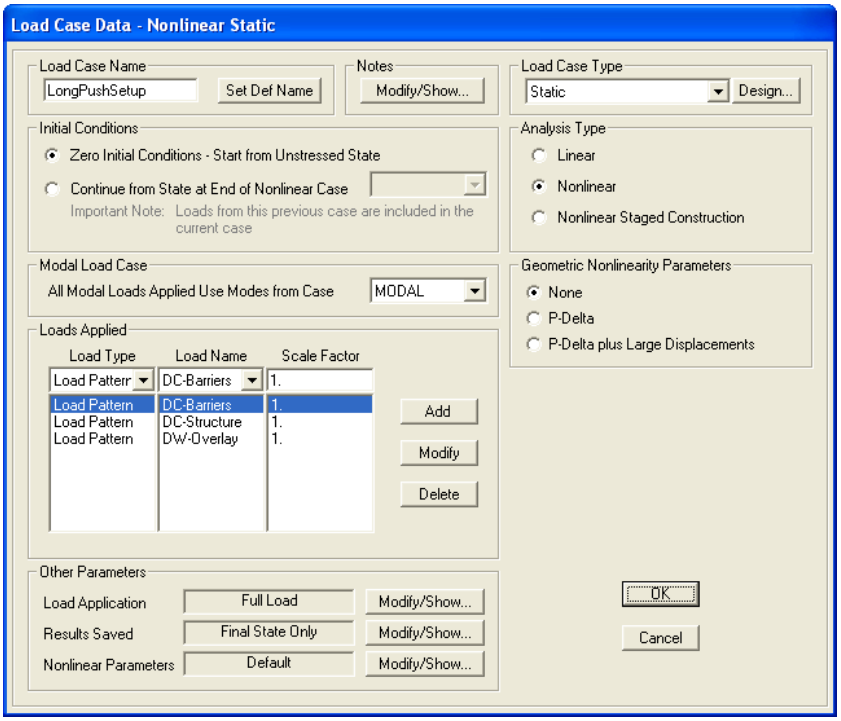

Load Case Data for Load Case "LongPushSetup"
Figure 4.2.2.1-1

It is seen in Figure 4.2.2.1-1 that the *Initial Conditions* are set to **Zero Initial Conditions – Start from Unstressed State**, the *Load Case Type* is **Static**, the *Analysis Type* is set to **Nonlinear**, and the *Geometric Nonlinearity Parameters* are set to **None**.

A new load case is now created called "LongPush", which will actually be the pushover analysis case. The *Load Case Data* form for the "LongPush" load case is shown in Figure 4.2.2.1-2 (**Define menu > Load Cases > *select* LongPush > *click* Modify/Show Load Case *button***).

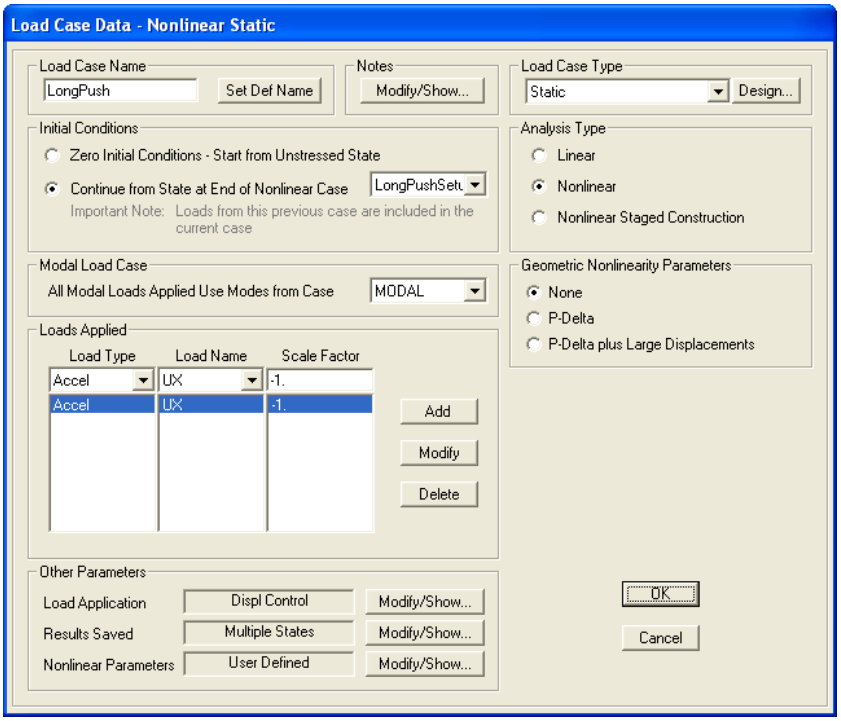

Load Case Data for Load Case "LongPush"
Figure 4.2.2.1-2

It is seen in Figure 4.2.2.1-2 that the *Initial Conditions* are set to **Continue from State at End of Nonlinear Case "LongPushSetup"**, the *Load Case Type* is **Static**, the *Analysis Type* is **Nonlinear**, and the *Geometric Nonlinearity Parameters* are set to **None**. Under *Loads Applied*, the *Load Type* is set to **Accel** in the **UX** direction with a *Scale Factor* equal to **-1**. Applying the acceleration in the negative X-direction results in a negative base shear and positive X-direction displacements.

By clicking the **Modify/Show** button for the *Load Application* parameters in Figure 4.2.2.1-2, the window shown in Figure 4.2.2.1-3 opens. It is seen in Figure 4.2.2.1-3 that the *Load Application Control* is set to **Displacement Control**, the *Load to a Monitored Displacement Magnitude of* value is set at **11** inches which is greater than the longitudinal displacement demand of 8.76 inches. Also, the *DOF* being tracked is **U1** *at Joint* **33**.

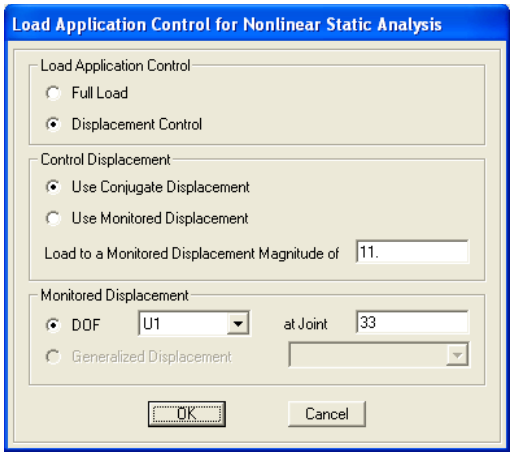

Load Application Control for Load Case "LongPush"
Figure 4.2.2.1-3

By clicking the **Modify/Show** button for the *Results Saved* in Figure 4.2.2.1-2, the window shown in Figure 4.2.2.1-4 opens. It is seen in Figure 4.2.2.1-4 that the *Results Saved* option is set to **Multiple States**, the *Minimum Number of Saved States* is set to **22**, which ensures that a step will occur for at least every half-inch of displacement. Also, the *Save positive Displacement Increments Only* box is checked.

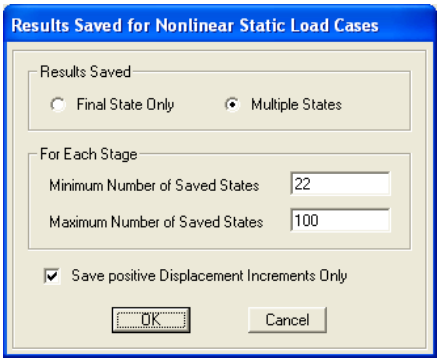

Results Saved for Load Case "LongPush"
Figure 4.2.2.1-4

4.2.2.2 Transverse Direction

As with the longitudinal direction, the dead load must be applied prior to performing the pushover analysis in the transverse direction. However, for the transverse direction, a single bent will be isolated using staged construction prior to performing the pushover analysis. To do so, the elements at Pier 2 are selected and then assigned to a group (**Assign menu > Assign to Group**). Figure 4.2.2.2-1 shows the *Group Definition* for the group "Pier2" (**Define menu > Groups > *select* Pier2 > *click* Modify/Show Group *button***).

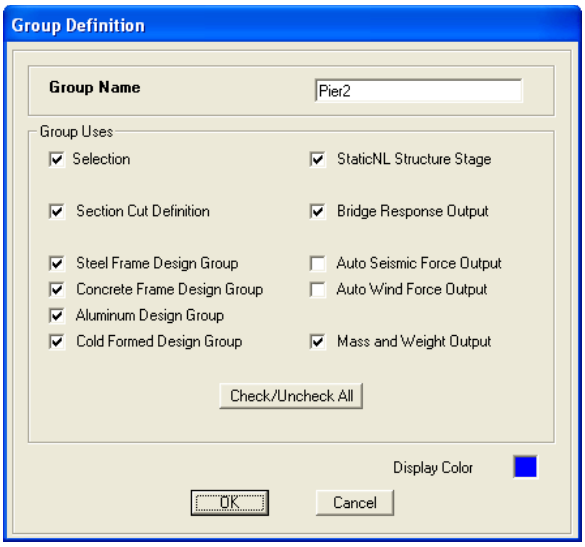

Group Definition for Group "Pier2"
Figure 4.2.2.2-1

To isolate the bent and apply the static loads to the columns, a staged construction load case called "TransPushSetup" is created (**Define menu > Load Cases > *select* TransPushSetup > *click* Modify/Show Load Case *button***). The "TransPushSetup" analysis case has two stages, one to isolate the bent, and one to apply the column axial loads. Note these two stages could be

combined into one stage without altering the results. Stage 1 of the "TransPushSetup" load case definition is shown in Figure 4.2.2.2-2.

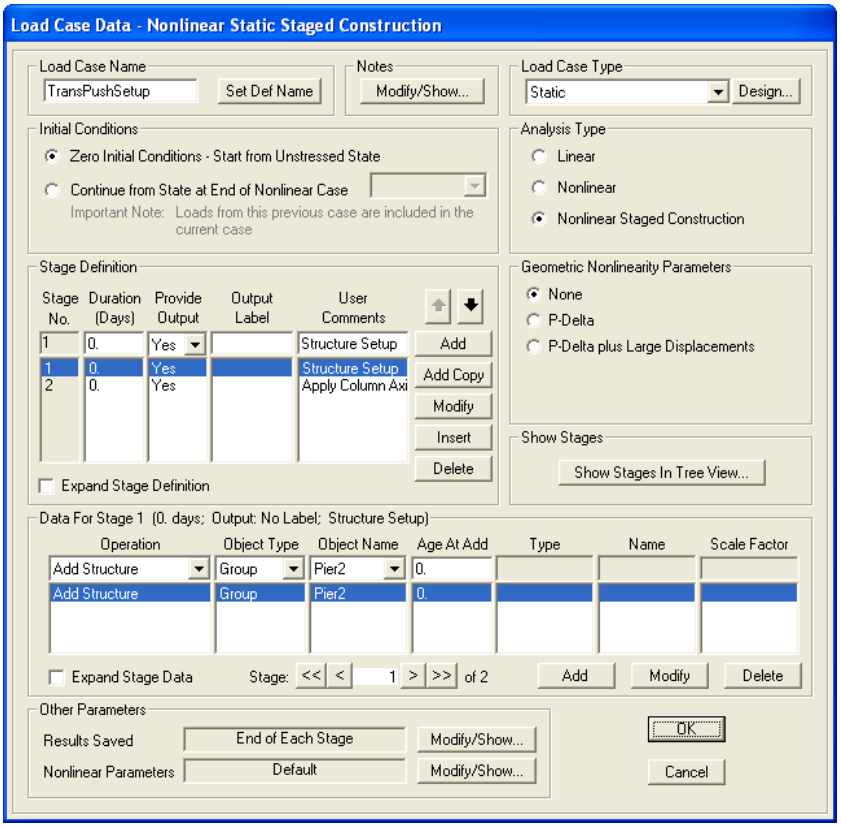

Stage 1 Load Case Data for Load Case "TransPushSetup"
Figure 4.2.2.2-2

It is seen in Figure 4.2.2.2-2 that the only elements added are those in the group "Pier2", the *Initial Conditions* are set to **Zero Initial Conditions – Start from Unstressed State**, the *Load Case Type* is **Static**, the *Analysis Type* is set to **Nonlinear Staged Construction**, and the *Geometric Nonlinearity Parameters* are set to **None**. Stage 2 of the "TransPushSetup" load case definition is shown in Figure 4.2.2.2-3.

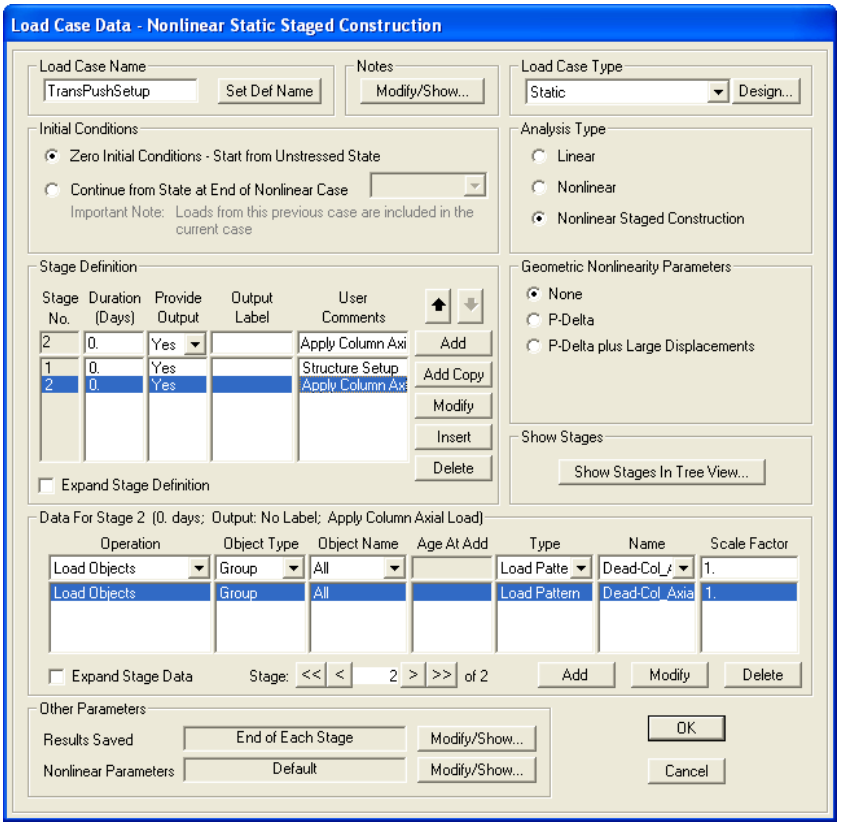

Stage 2 Load Case Data for Load Case "TransPushSetup"
Figure 4.2.2.2-3

It is seen in Figure 4.2.2.2-3 that the load pattern "Dead-Col_Axial" is applied.

A new load case is now created called "TransPush", which will actually be the pushover analysis case. The *Load Case Data* form for the "TransPush" load case is shown in Figure 4.2.2.2-4 (**Define menu > Load Cases > *select* TransPush > *click* Modify/Show Load Case *button***).

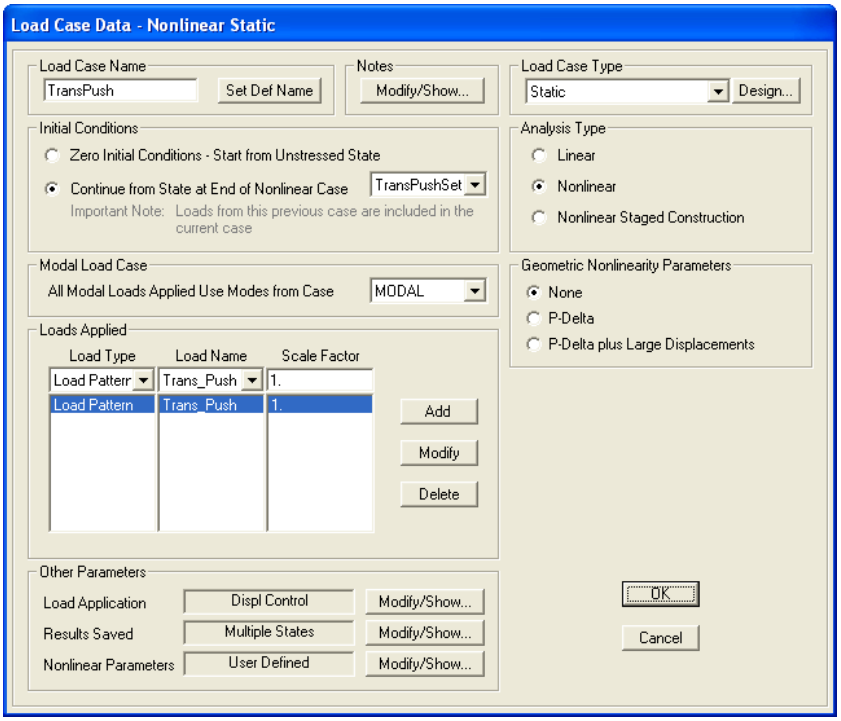

Load Case Data for Load Case "TransPush"
Figure 4.2.2.2-4

It is seen in Figure 4.2.2.2-4 that the *Initial Conditions* are set to **Continue from State at End of Nonlinear Case "TransPushSetup"**, the *Load Case Type* is **Static**, the *Analysis Type* is **Nonlinear**, and the *Geometric Nonlinearity Parameters* are set to **None**. Under *Loads Applied*, the *Load Type* is set to **Load Pattern** with the *Load Name* set to **Trans_Push** and the *Scale Factor* is equal to **1**.

By clicking the **Modify/Show** button for the *Load Application* parameters in Figure 4.2.2.2-4, the window shown in Figure 4.2.2.2-5 opens. It is seen in Figure 4.2.2.2-5 that the *Load Application Control* is set to **Displacement Control**, the *Load to a Monitored Displacement Magnitude of* value is set at **10** inches, which is larger than the transverse displacement demand of 6.07 inches. Also, the *DOF* being tracked is **U2** *at Joint* **33**.

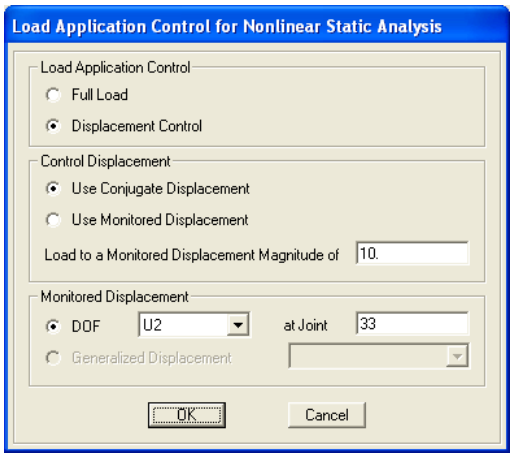

Load Application Control for Load Case "TransPush"
Figure 4.2.2.2-5

By clicking the **Modify/Show** button for the *Results Saved* in Figure 4.2.2.2-4, the window shown in Figure 4.2.2.2-6 opens. It is seen in Figure 4.2.2.2-6 that the *Results Saved* option is set to **Multiple States**, the *Minimum Number of Saved States* is set to **20**, which ensures that a step will occur for at least every half-inch of displacement. Also, the *Save positive Displacement Increments Only* box is checked.

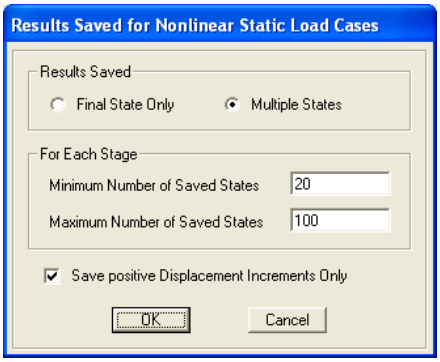

Results Saved for Load Case "TransPush"
Figure 4.2.2.2-6

4.2.3 Load Case Results

4.2.3.1 Longitudinal Direction

The system pushover curve for the longitudinal direction is shown in Figure 4.2.3.1-1 (**Display menu > Show Static Pushover Curve**). The point on the curve where the base shear begins to decrease indicates the displacement at which the first plastic hinge reaches its curvature limit state and is the displacement capacity of the structure.

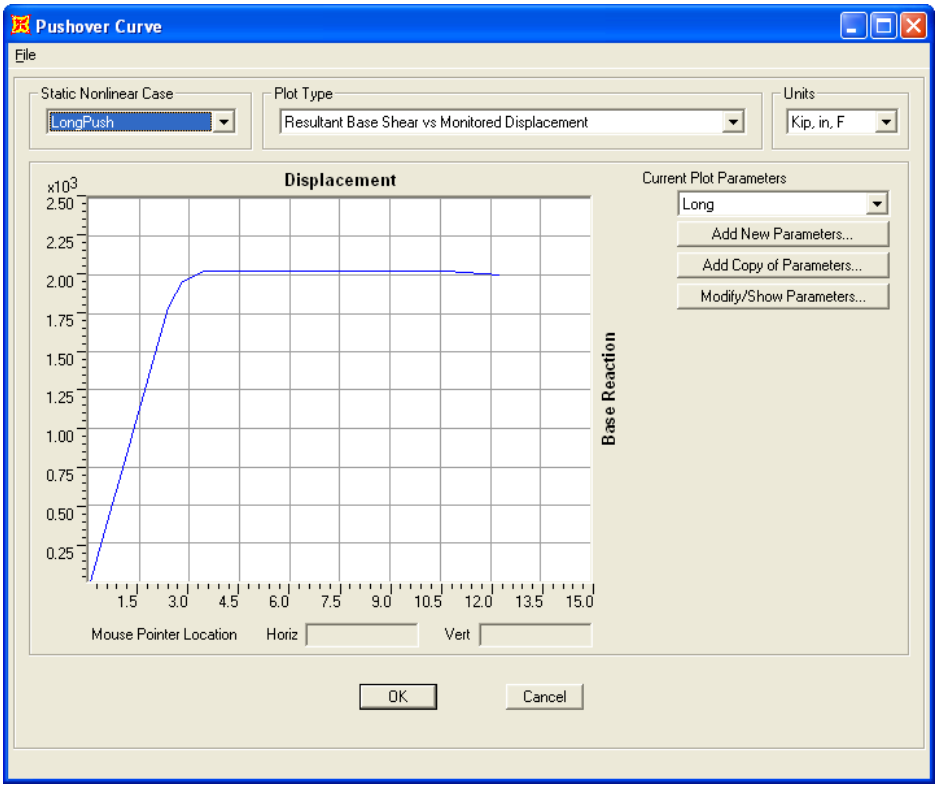

Pushover Curve for Load Case "LongPush"
Figure 4.2.3.1-1

Figures 4.2.3.1-2 through 4.2.3.1-13 show the deformed shape of the structure at various displacements for the load case "LongPush" (**Display menu > Show Deformed Shape > *select* LongPush > *click* OK *button***). Note that the plastic hinge color scheme terms such as "IO", "LS", and "CP" are in reference to performance based design of building structures. However, for Caltrans plastic hinges, the colors are discretized evenly along the plastic deformation. Therefore, the color scheme still provides a visual representation of the hinge plastic strain progression that is useful.

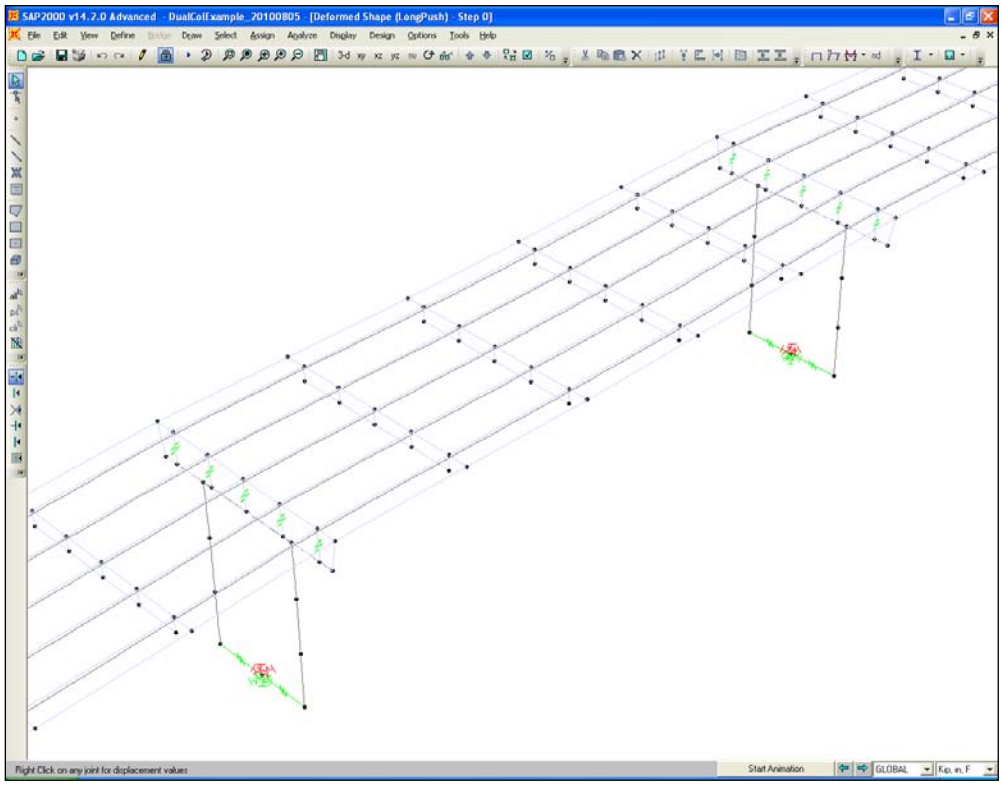

View of Deformed Shape for the Load Case "LongPush" at UX = 0.0 in.
Figure 4.2.3.1-2

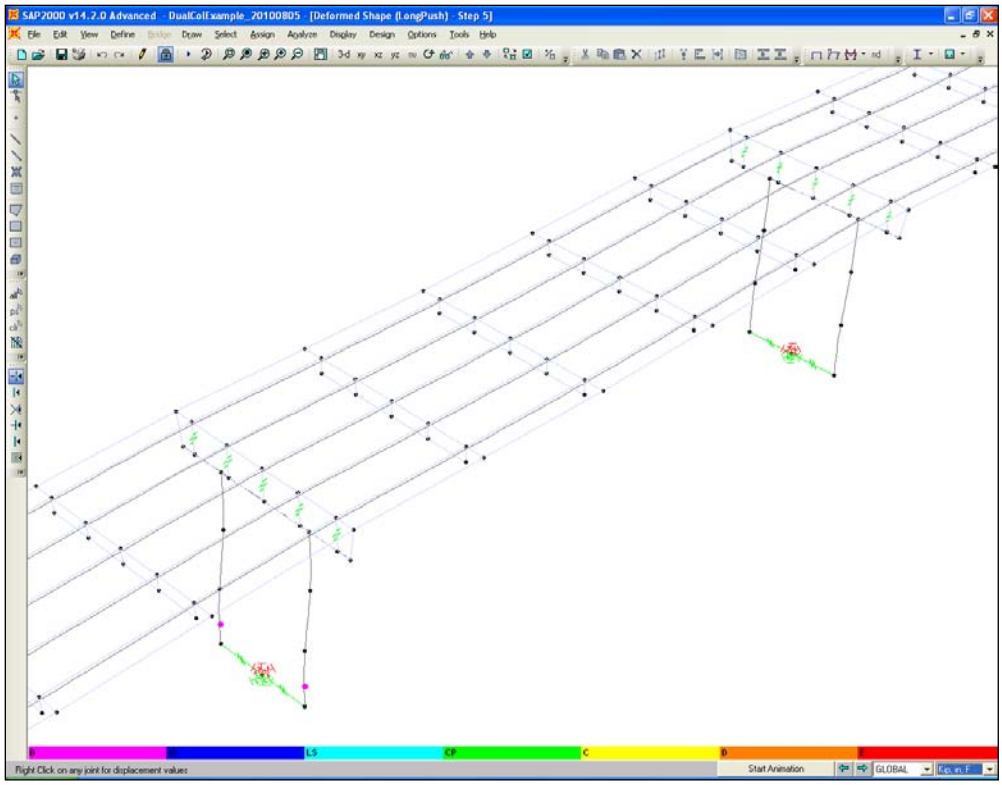

View of Deformed Shape for the Load Case "LongPush" at UX = 2.3 in.
Figure 4.2.3.1-3

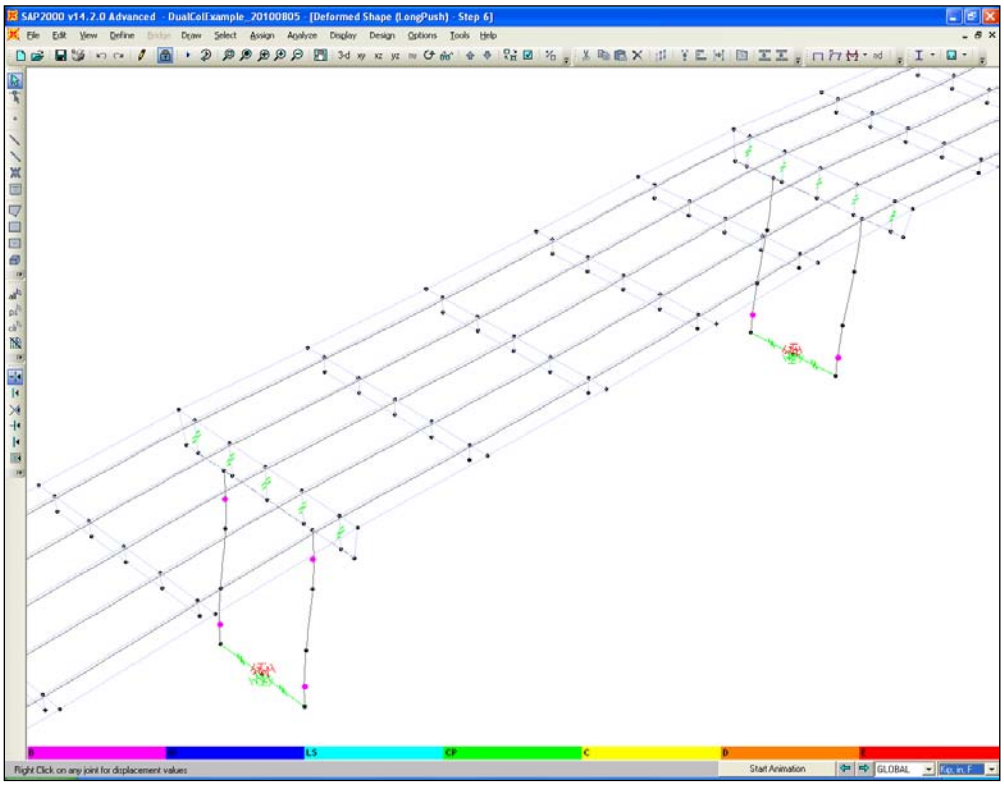

View of Deformed Shape for the Load Case "LongPush" at UX = 2.8 in.
Figure 4.2.3.1-4

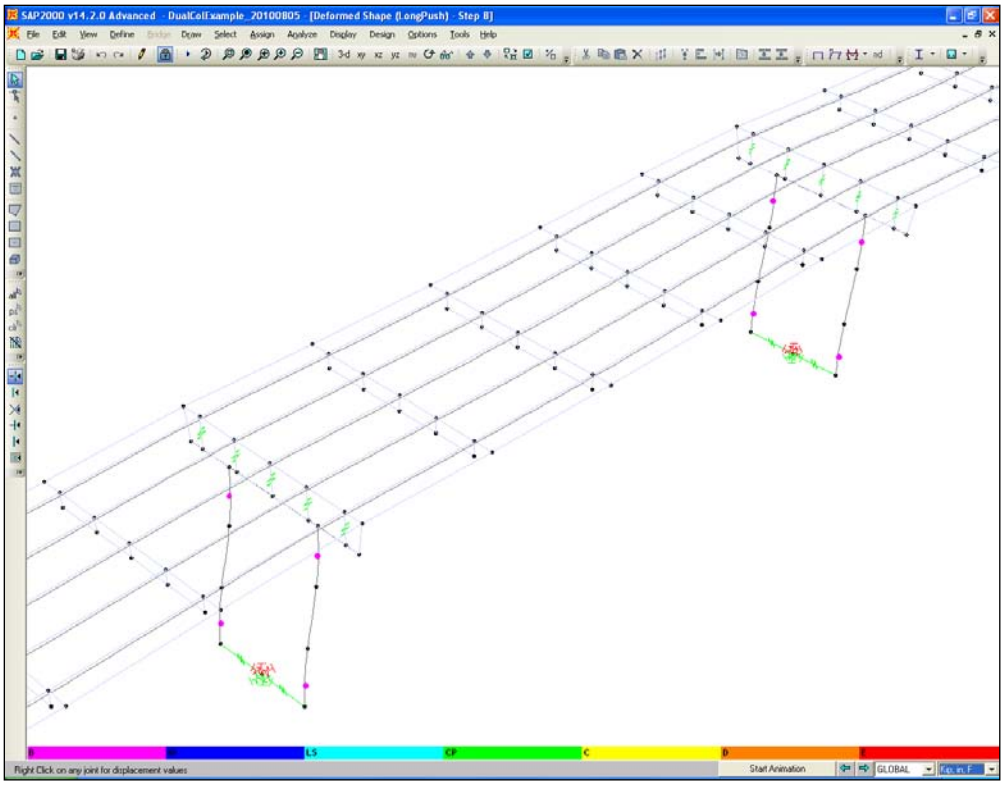

View of Deformed Shape for the Load Case "LongPush" at UX = 3.5 in.
Figure 4.2.3.1-5

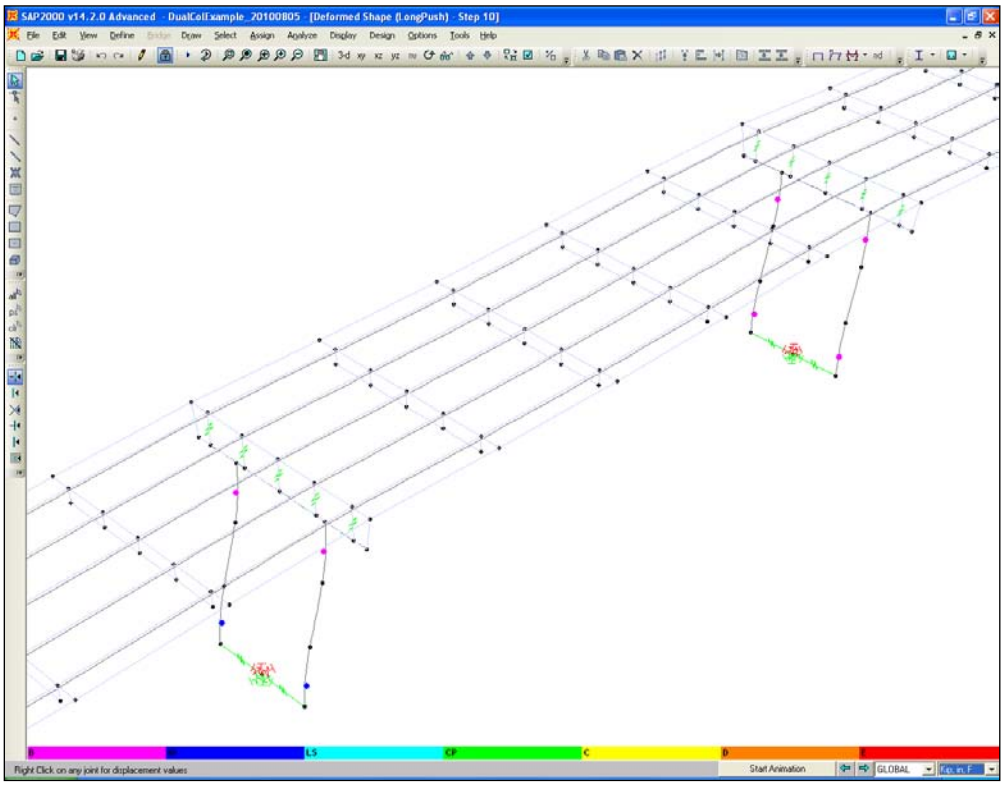

View of Deformed Shape for the Load Case "LongPush" at UX = 4.4 in.
Figure 4.2.3.1-6

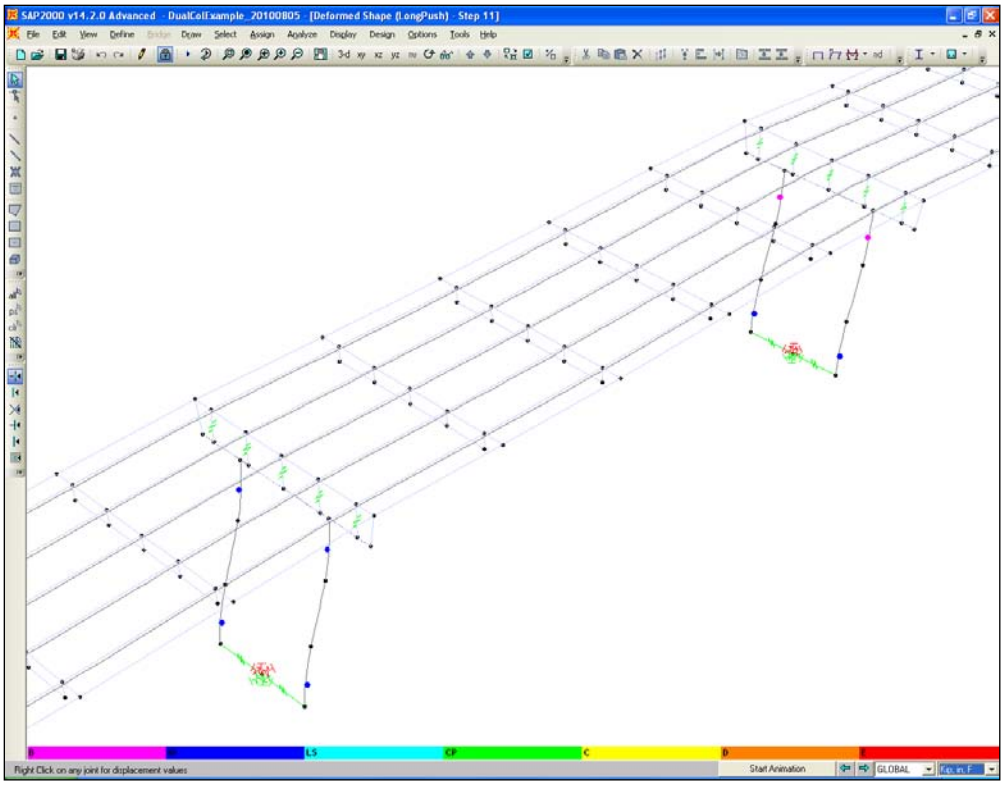

View of Deformed Shape for the Load Case "LongPush" at UX = 4.9 in.
Figure 4.2.3.1-7

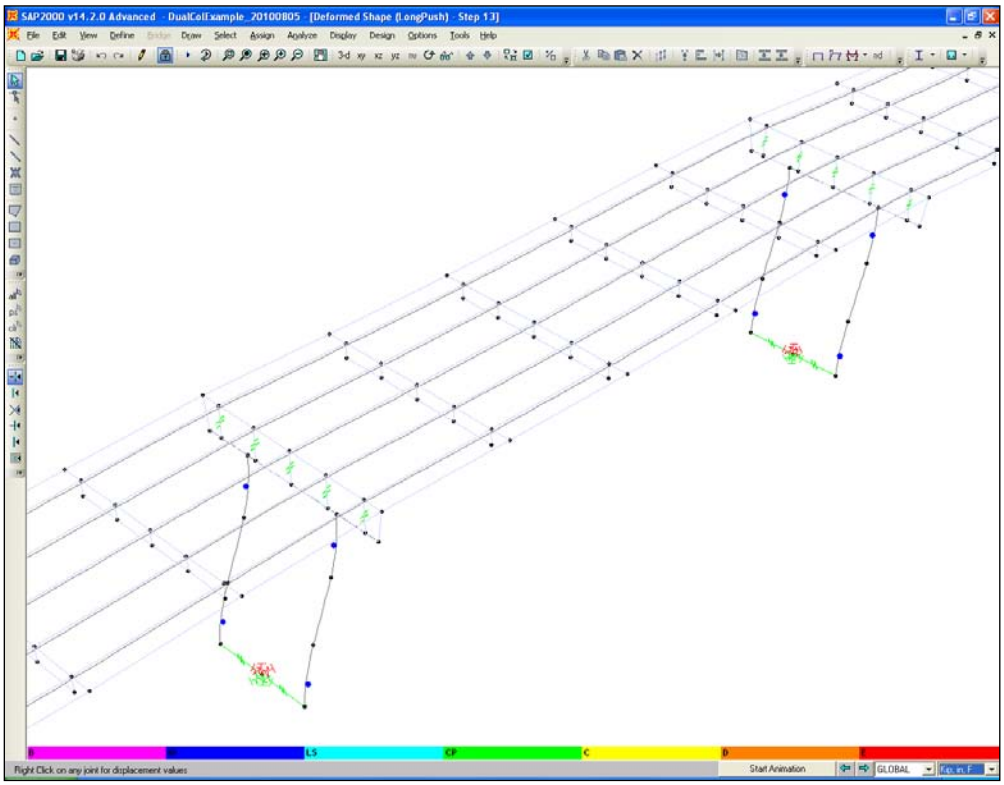

View of Deformed Shape for the Load Case "LongPush" at UX = 5.9 in.
Figure 4.2.3.1-8

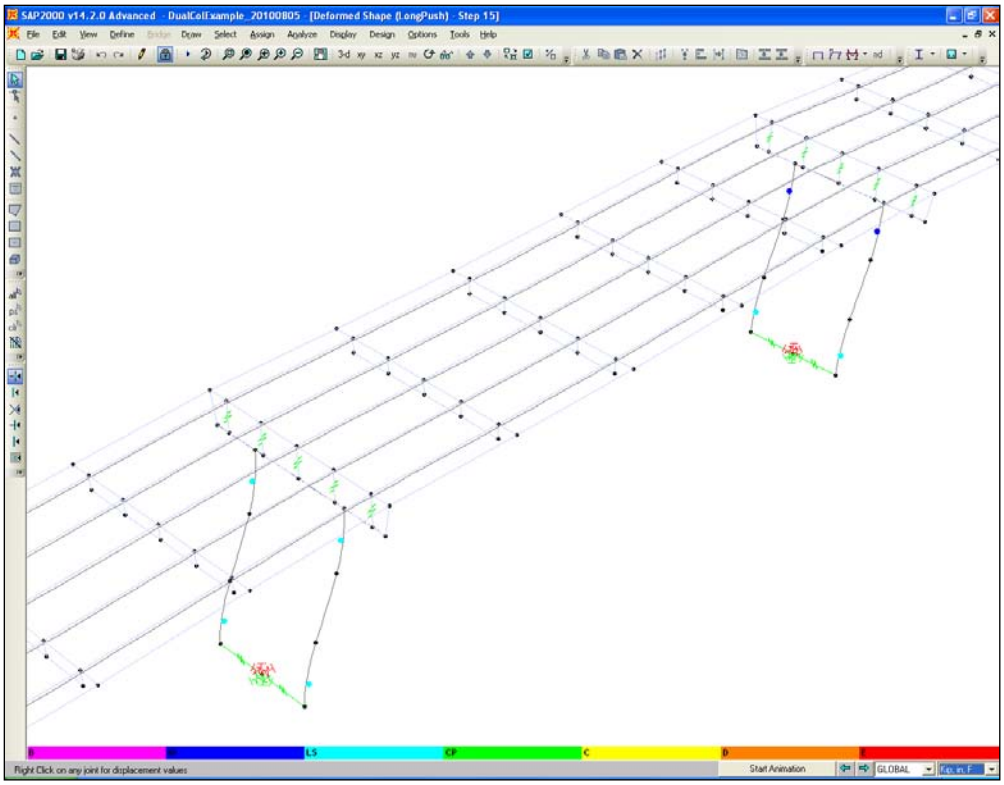

View of Deformed Shape for the Load Case "LongPush" at UX = 6.9 in.
Figure 4.2.3.1-9

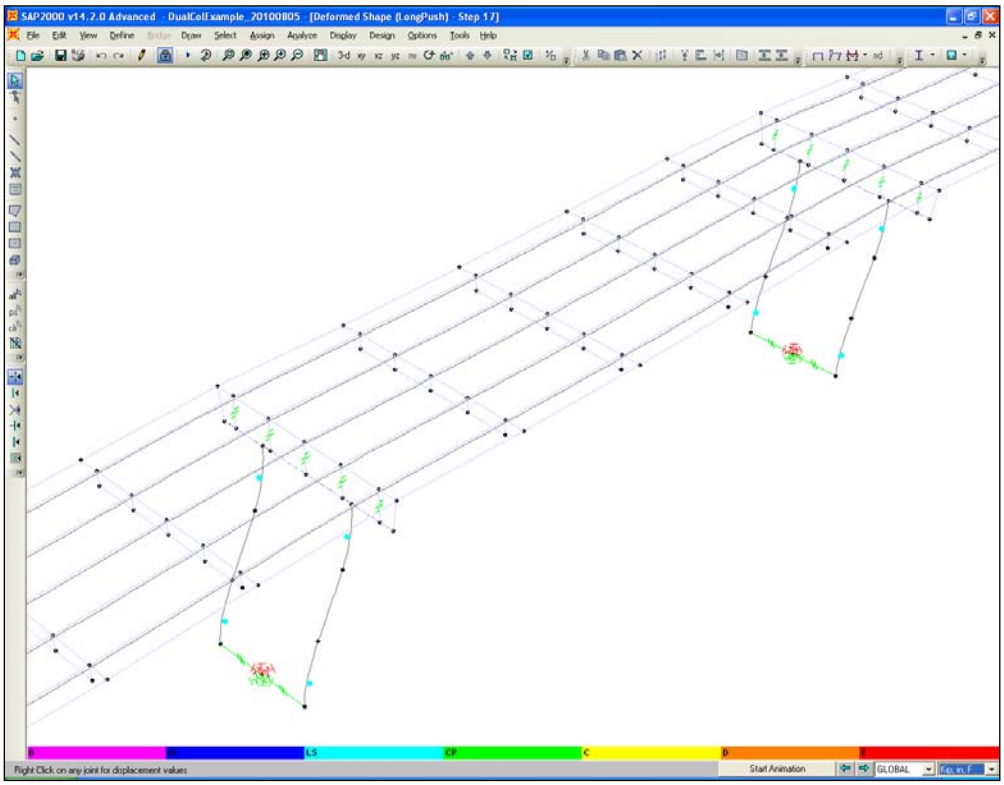

View of Deformed Shape for the Load Case "LongPush" at UX = 7.9 in.
Figure 4.2.3.1-10

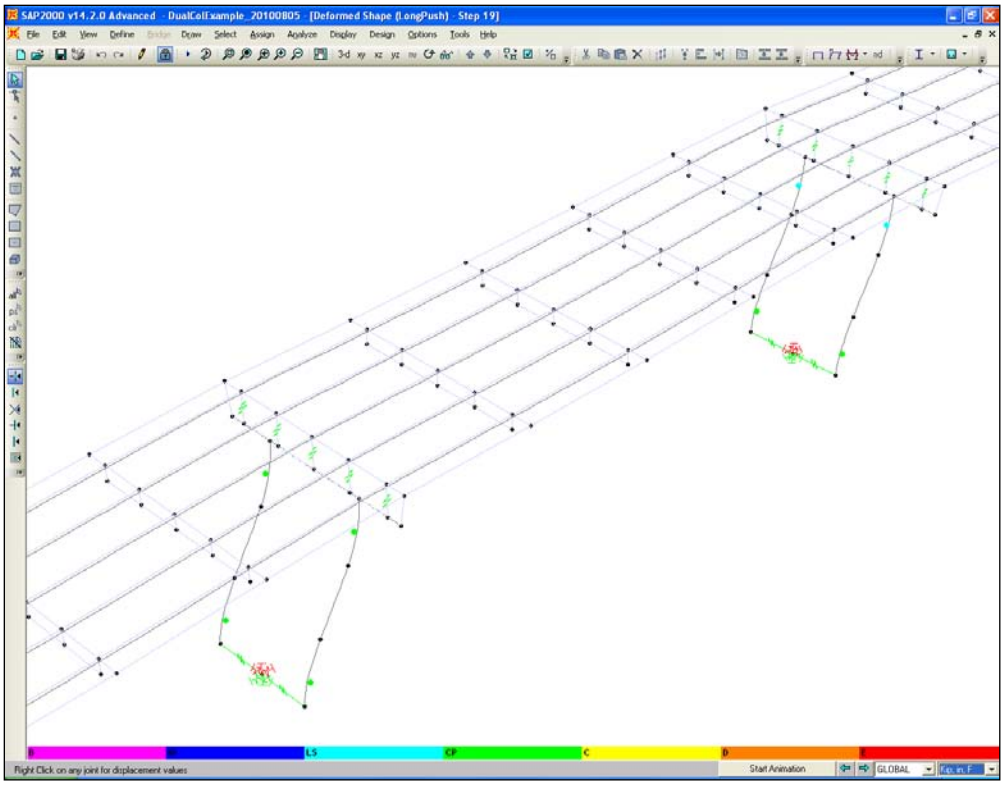

View of Deformed Shape for the Load Case "LongPush" at UX = 8.9 in.
Figure 4.2.3.1-11

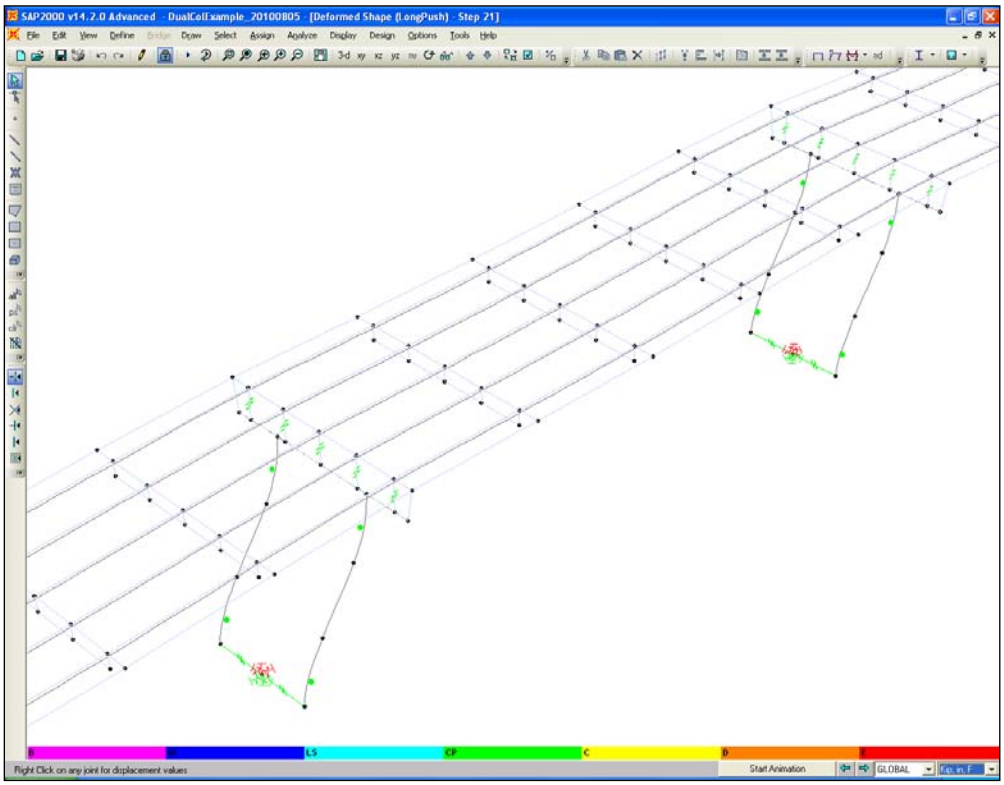

View of Deformed Shape for the Load Case "LongPush" at UX = 9.9 in.
Figure 4.2.3.1-12

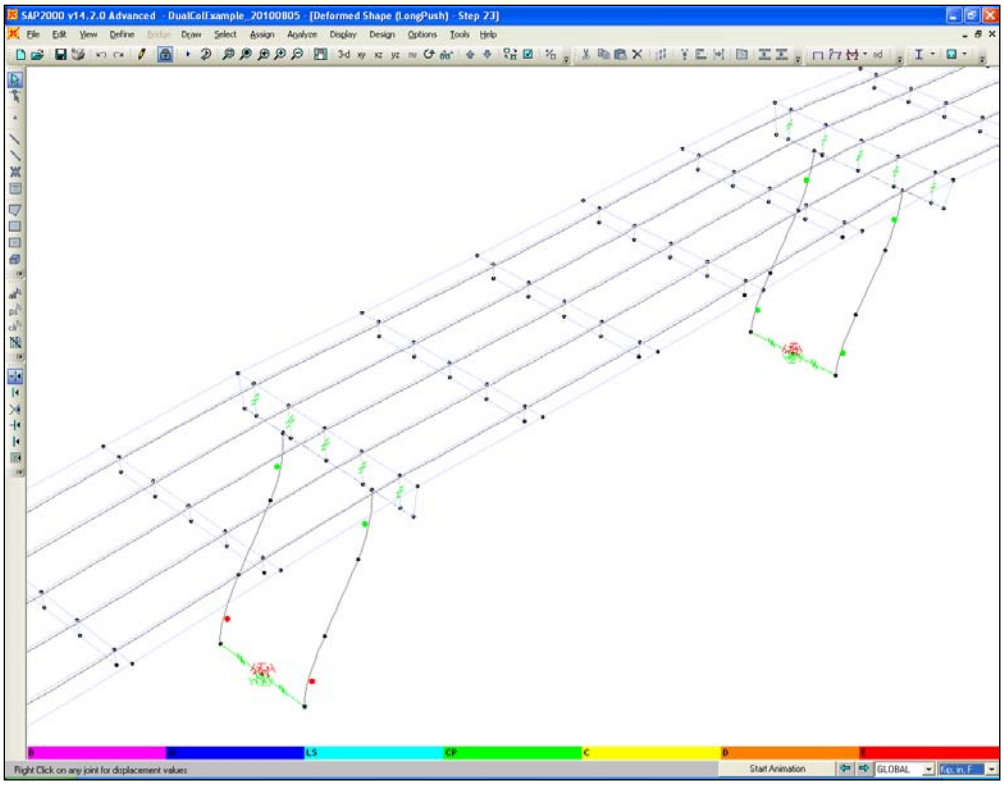

View of Deformed Shape for the Load Case "LongPush" at UX = 10.7 in.
Figure 4.2.3.1-13

4.2.3.2 Transverse Direction

The system pushover curve for the transverse direction is shown in Figure 4.2.3.2-1 (**Display menu > Show Static Pushover Curve**). The point on the curve where the base shear begins to decrease indicates the displacement at which the first plastic hinge reaches its curvature limit state and is the displacement capacity of the structure.

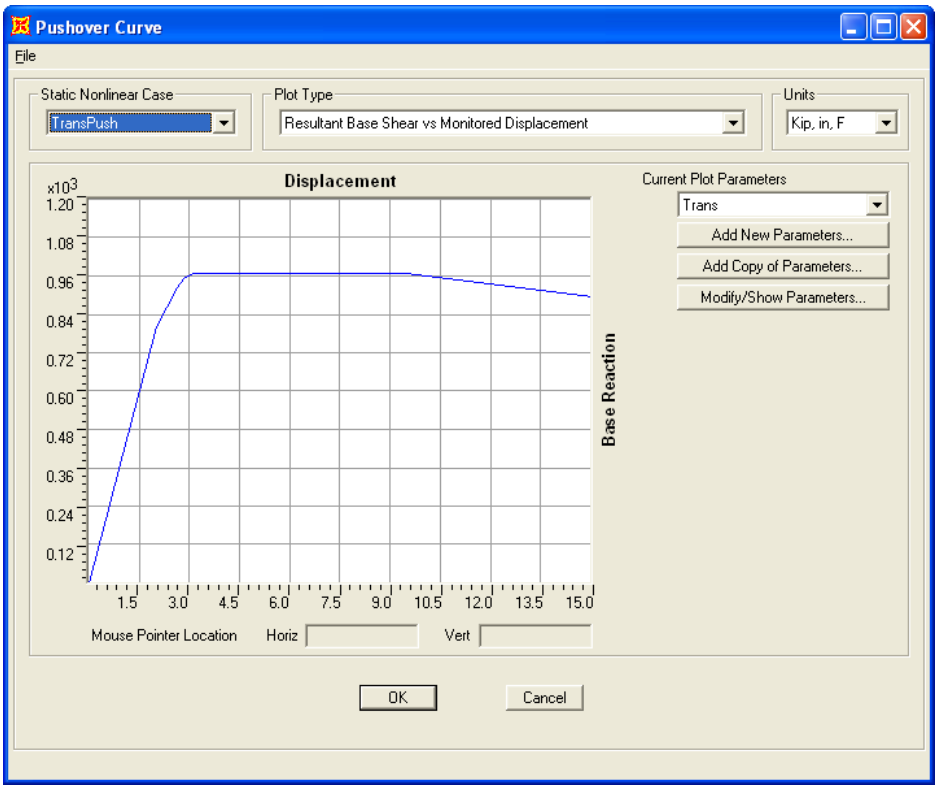

Pushover Curve for Load Case "TransPush"
Figure 4.2.3.2-1

Figures 4.2.3.2-2 through 4.2.3.2-13 show the deformed shape of the structure at various displacements for the load case "TransPush" (**Display menu > Show Deformed Shape > *select* TransPush > *click* OK *button***). Note that the plastic hinge color scheme terms such as "IO", "LS", and "CP" are in reference to performance-based design of building structures. However, for Caltrans plastic hinges, the colors are discretized evenly along the plastic deformation. Therefore, the color scheme still provides a visual representation of the hinge plastic strain progression that is useful.

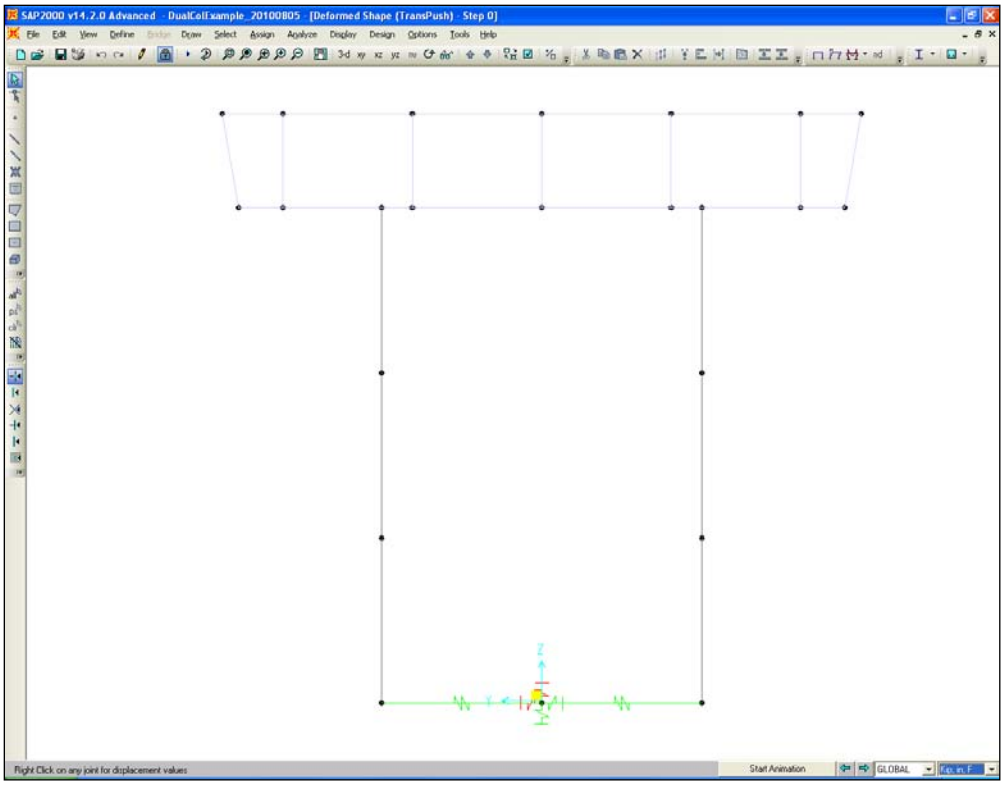

View of Deformed Shape for the Load Case "TransPush" at UY = 0.0 in.
Figure 4.2.3.2-2

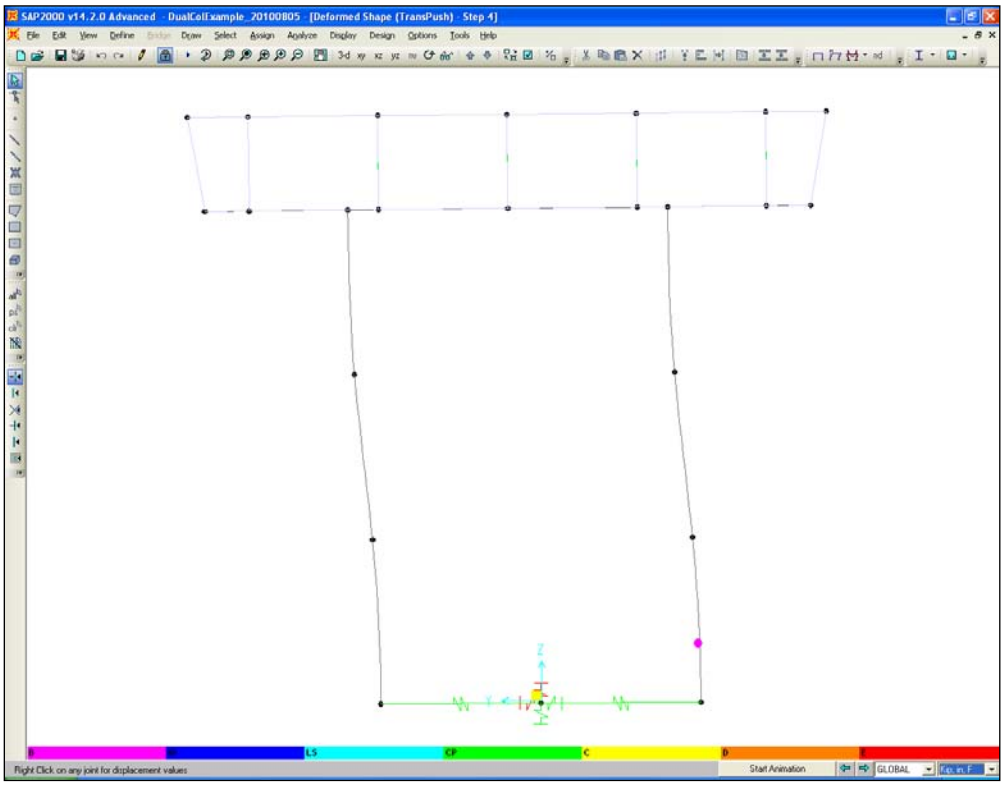

View of Deformed Shape for the Load Case "TransPush" at UY = 2.0 in.
Figure 4.2.3.2-3

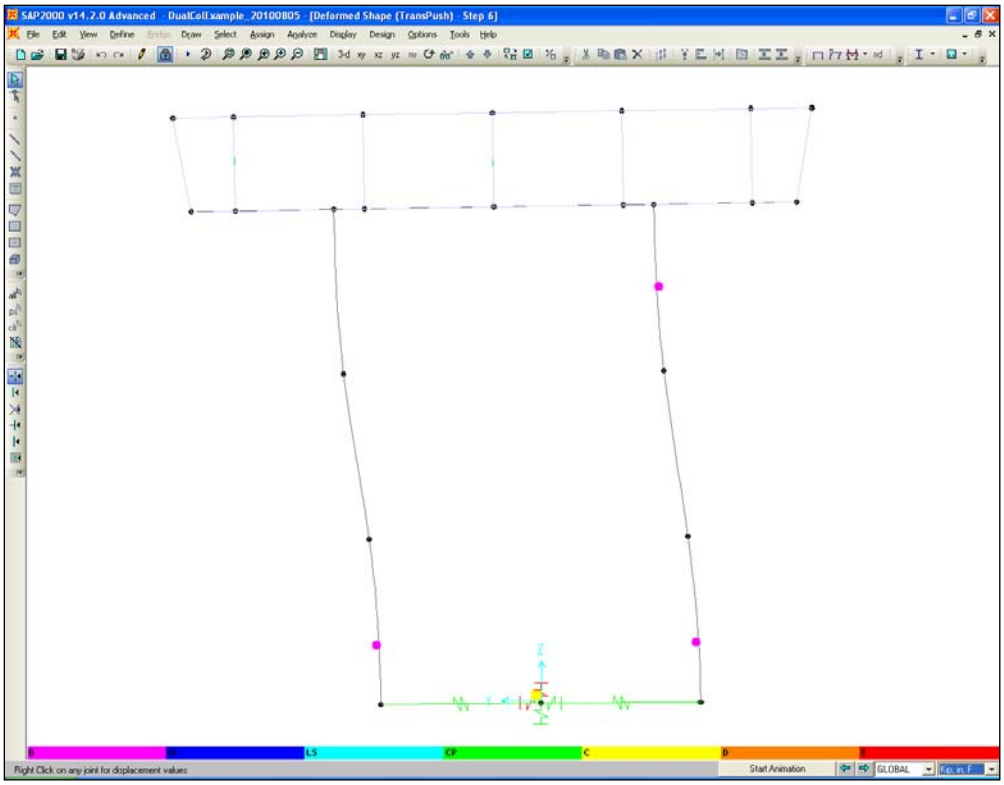

View of Deformed Shape for the Load Case "TransPush" at UY = 2.8 in.
Figure 4.2.3.2-4

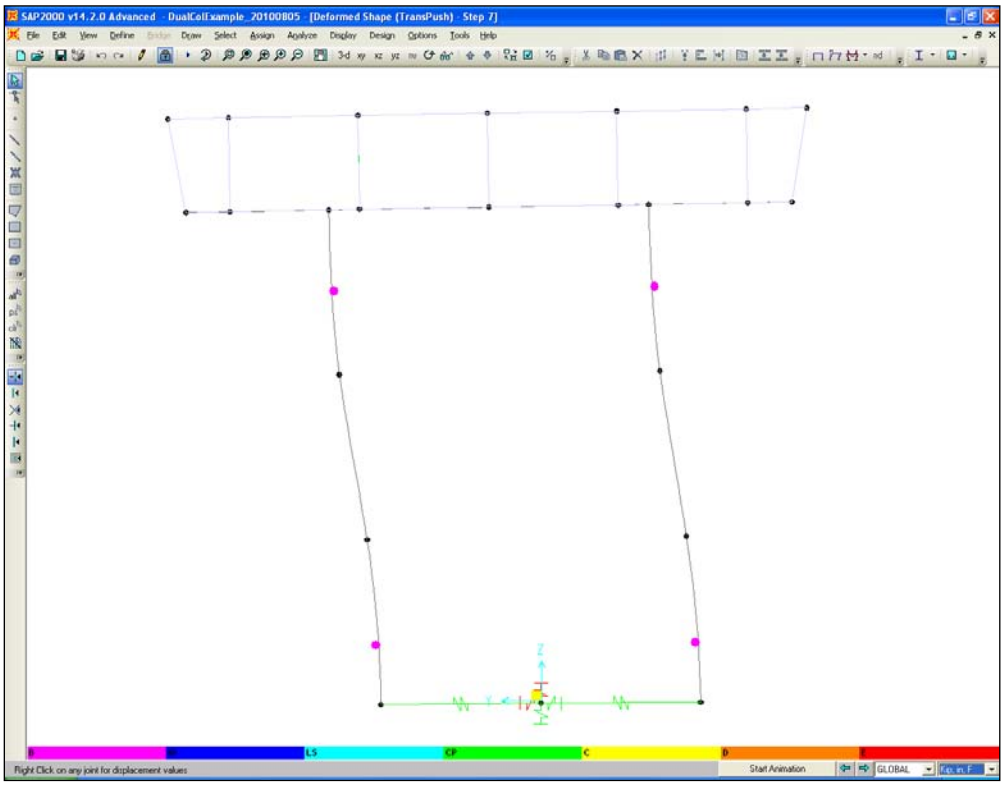

View of Deformed Shape for the Load Case "TransPush" at UY = 3.1 in.
Figure 4.2.3.2-5

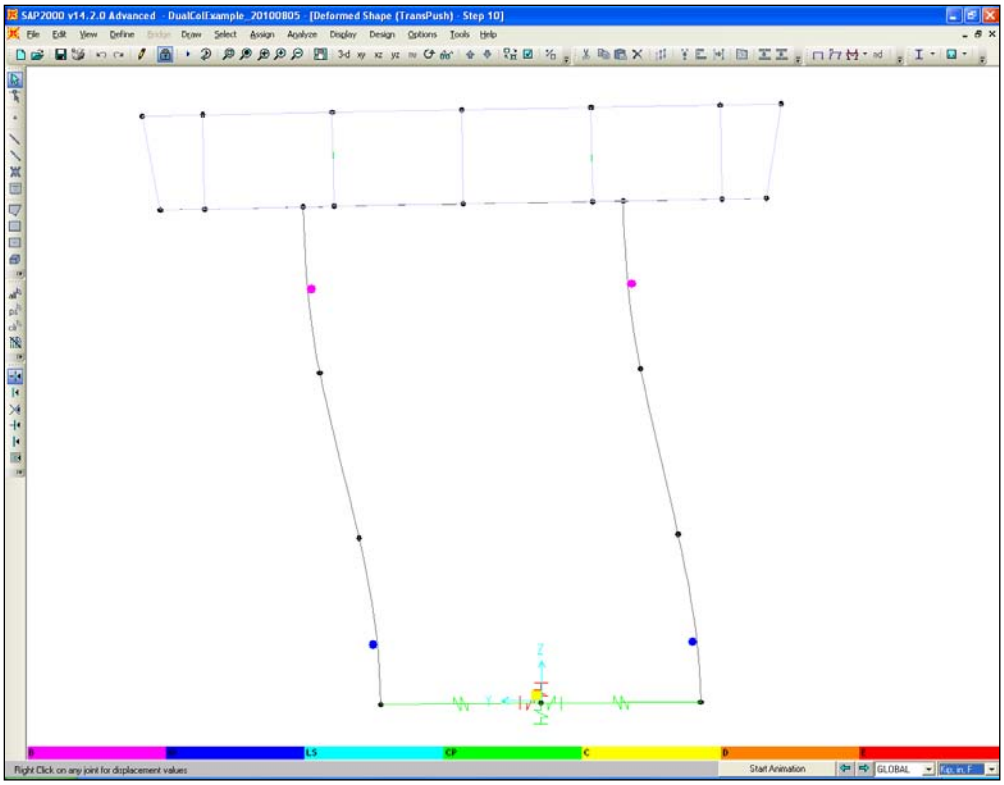

View of Deformed Shape for the Load Case "TransPush" at UY = 4.6 in.
Figure 4.2.3.2-6

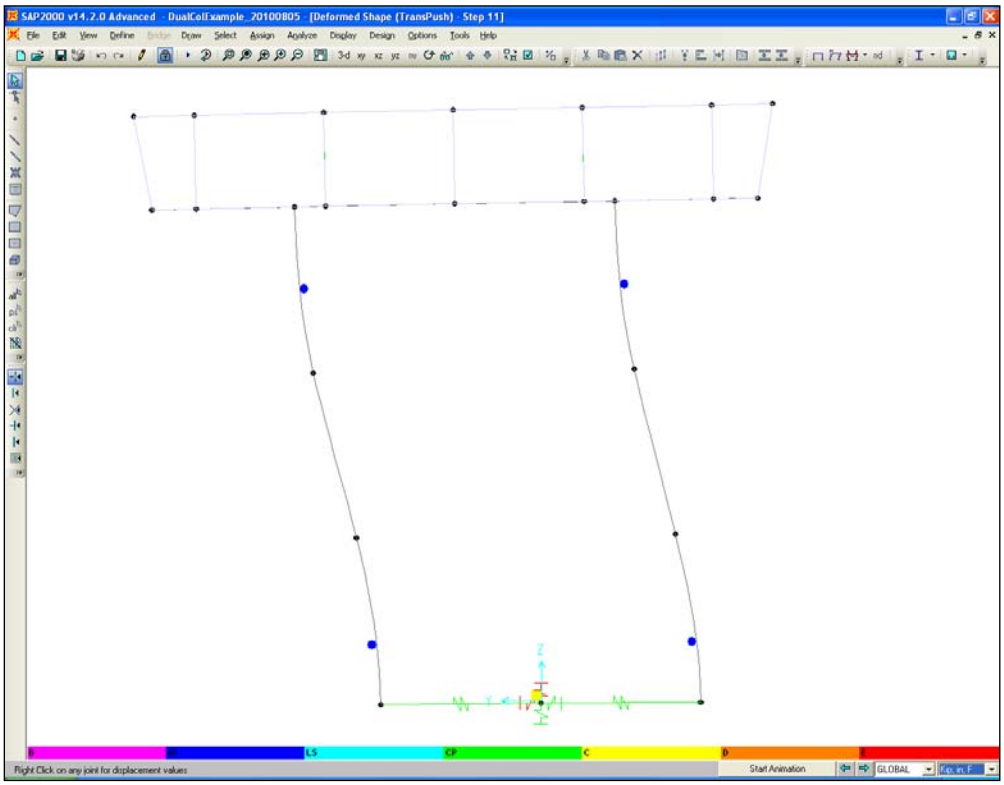

View of Deformed Shape for the Load Case "TransPush" at UY = 5.1 in.
Figure 4.2.3.2-7

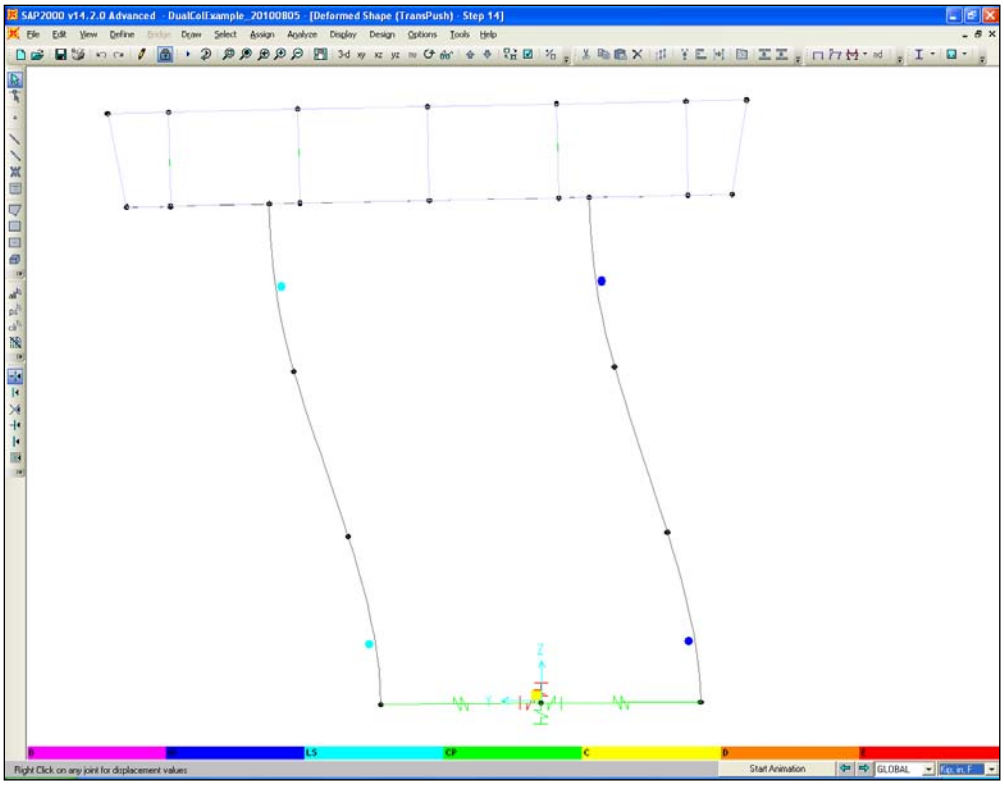

View of Deformed Shape for the Load Case "TransPush" at UY = 6.6 in.
Figure 4.2.3.2-8

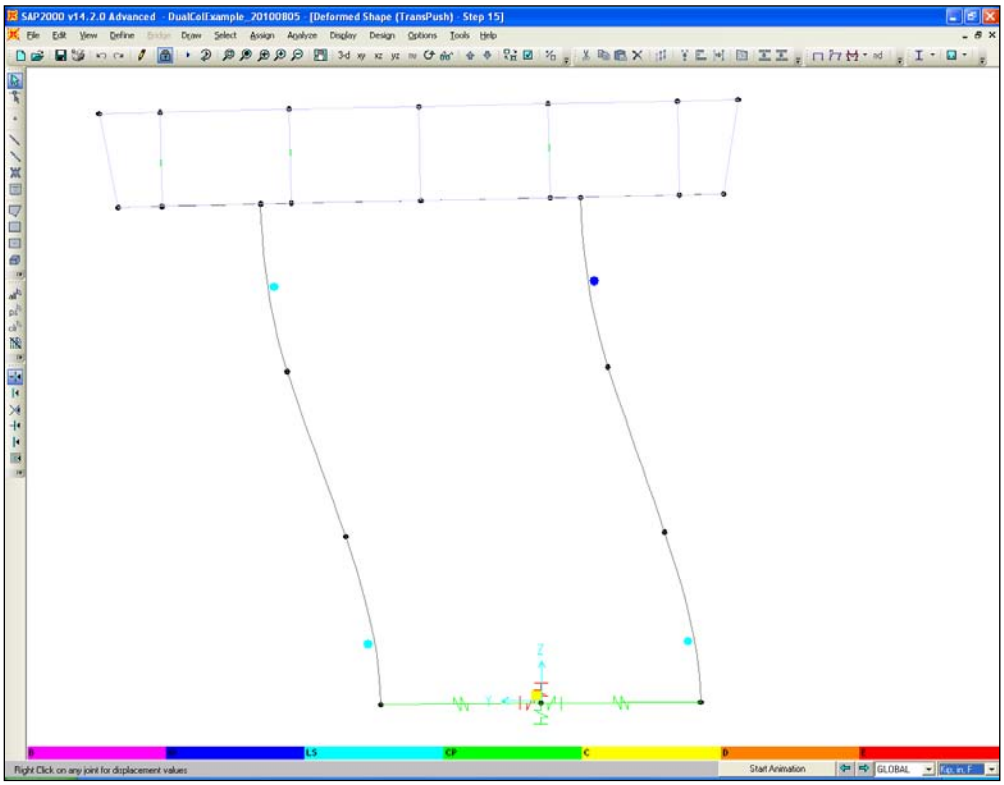

View of Deformed Shape for the Load Case "TransPush" at UY = 7.1 in.
Figure 4.2.3.2-9

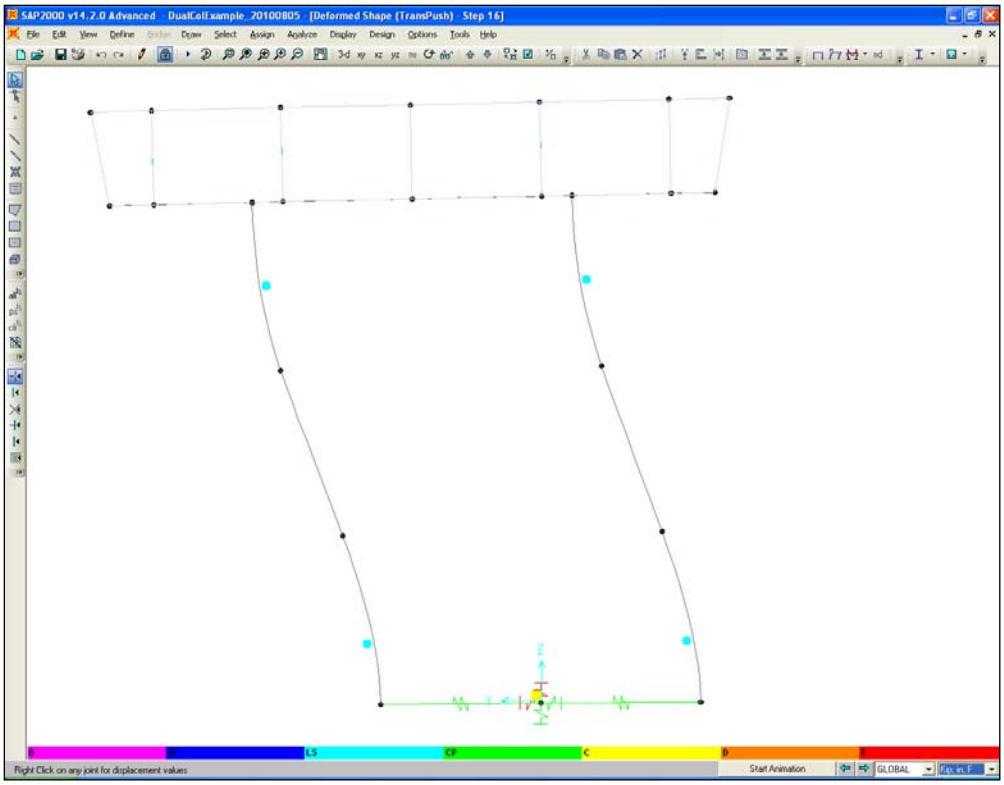

View of Deformed Shape for the Load Case "TransPush" at UY = 7.6 in.
Figure 4.2.3.2-10

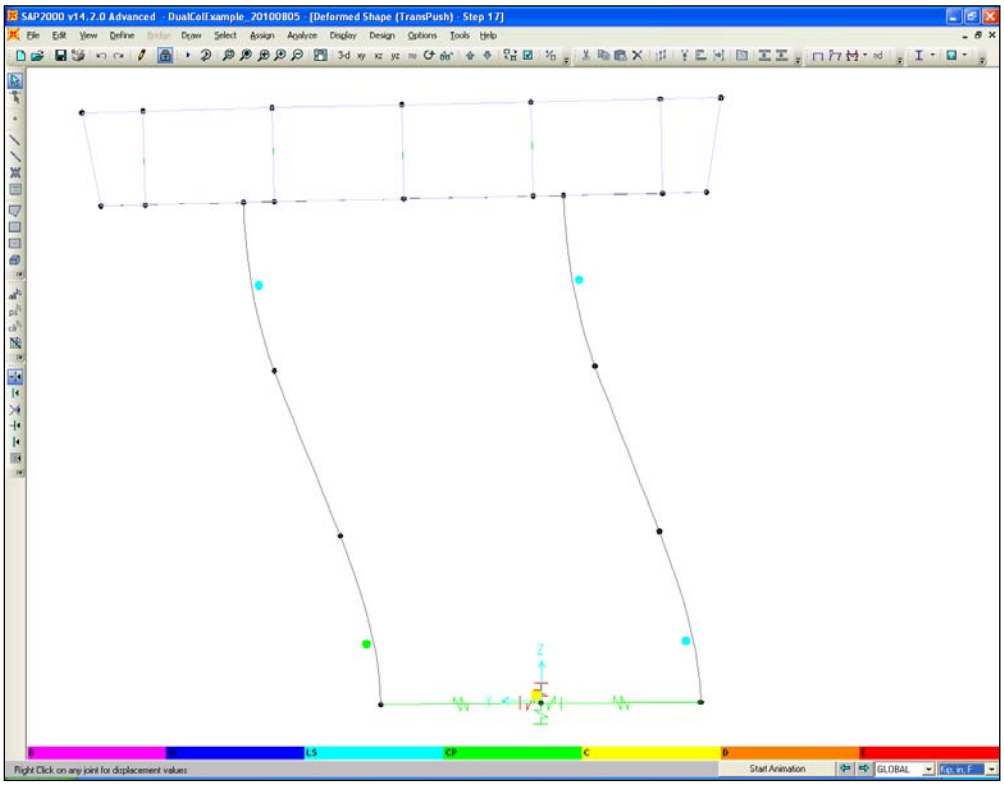

View of Deformed Shape for the Load Case "TransPush" at UY = 8.1 in.
Figure 4.2.3.2-11

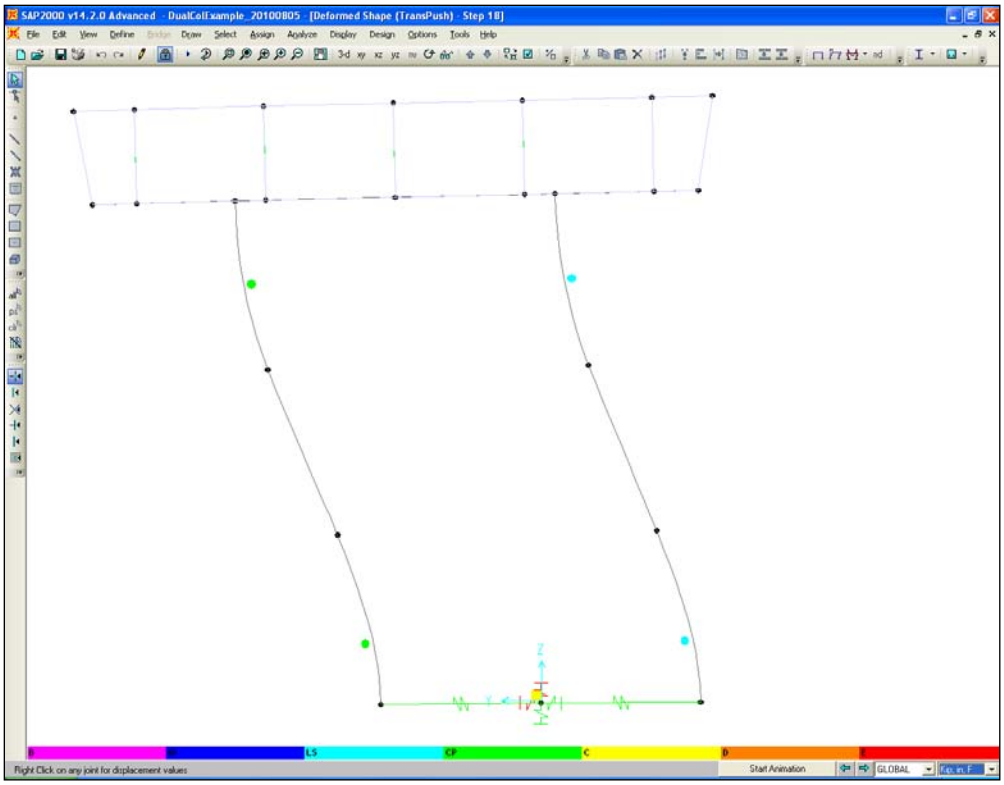

View of Deformed Shape for the Load Case "TransPush" at UY = 8.6 in.
Figure 4.2.3.2-12

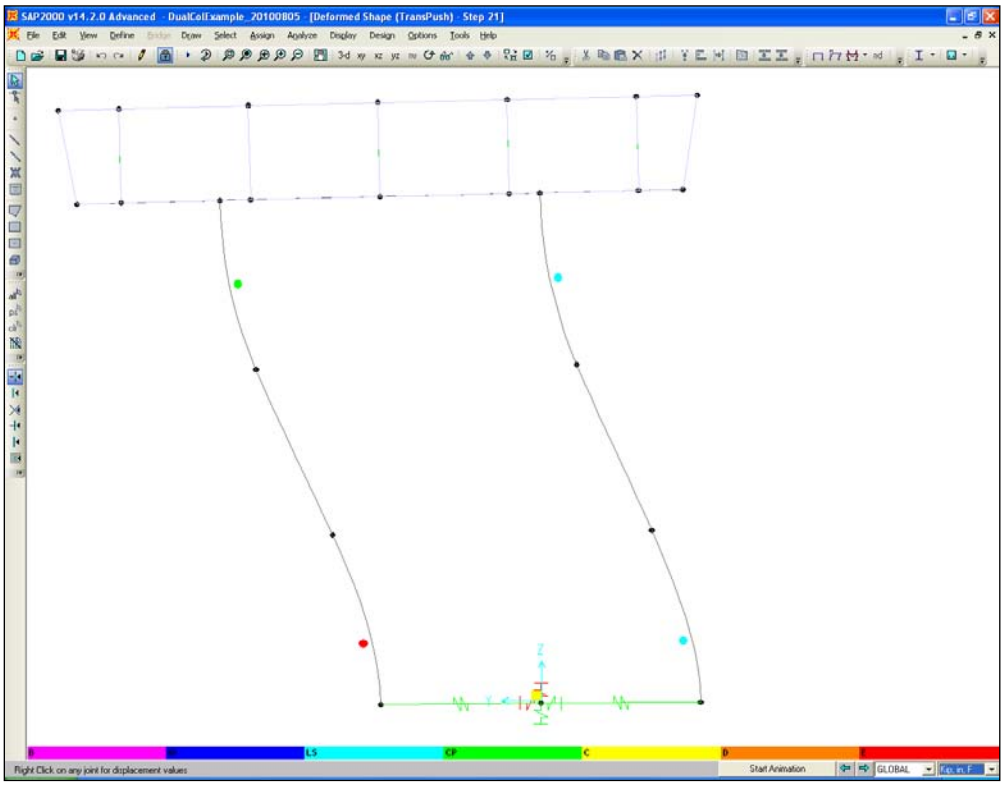

View of Deformed Shape for the Load Case "TransPush" at UY = 9.5 in.
Figure 4.2.3.2-13

5. Code Requirements

5.1 P-Δ Capacity Requirement Check

The requirements of section 4.11.5 of the *AASHTO Guide Specifications for LRFD Seismic Bridge Design* must be satisfied or a nonlinear time history analysis that includes P-Δ effects must be performed. The requirement is as follows:

$P_{dl}\Delta_r \leq 0.25\ M_p$

Where:

P_{dl} = unfactored dead load acting on the column (kip)
= 1,250 kips

Δ_r = relative lateral offset between the point of contraflexure and the furthest end of the plastic hinge (in.)
= Δ^L_D / 2 (Assumed since the inflection point is located at approximately mid-height of the column. If the requirements are not met, a more advanced calculation of Δ_r will be performed)

M_p = idealized plastic moment capacity of reinforced concrete column based upon expected material properties (kip-in.)
= 78,560 kip-in. (See Figure 3.1.2-1)

5.1.1 Longitudinal Direction

$0.25M_p$= 0.25 * 78,560
= 19,640 kip-in.

Δ_r = $\Delta^L_{D\_Long}$ / 2
= 8.76 / 2
= 4.38 in.

$P_{dl}\Delta_r$ = 1,250 * 4.38
= 5,475 kip-in. < $0.25M_p$ = 19,640 kip-in. => Okay

5.1.2 Transverse Direction

Δ_r = $\Delta^L_{D\_Trans}$ / 2
= 6.07 / 2
= 3.04 in.

$P_{dl}\Delta_r$ = 1,250 kips * 3.04
= 3,800 kip-in. < $0.25M_p$ = 19,640 kip-in. => Okay

5.2 Minimum Lateral Strength Check

The requirements of Section 8.7.1 of the *AASHTO Guide Specifications for LRFD Seismic Bridge Design* must be satisfied. The requirement is as follows:

$M_{ne} \geq 0.1\ P_{trib}\ (H_h + 0.5\ D_s) / \Lambda$

Where:

M_{ne} = nominal moment capacity of the column based upon expected material properties as shown in Figure 8.5-1 of the *AASHTO Guide Specifications for LRFD Seismic Bridge Design* (kip-in.)

P_{trib} = greater of the dead load per column or force associated with the tributary seismic mass collected at the bent (kip)

H_h = the height from the top of the footing to the top of the column or the equivalent column height for a pile extension (in.)
= 34.0 * 12 (Top of footing to top of crossbeam)
= 408 in.

D_s = depth of superstructure (in.)
= 7.083 * 12
= 85 in.

Λ = fixity factor (See Section 4.8.1 of the *AASHTO Guide Specifications for LRFD Seismic Bridge Design*)
= 2 for fixed top and bottom

Determine P_{trib}:

Since the abutments are being modeled as free in the longitudinal direction, all of the seismic mass is collected at the bents in the longitudinal direction. Therefore, the force associated with the tributary seismic mass collected at the bent is greater than the dead load per column and is computed as follows:

P_{trib} = Weight of Structure / # of bents / # of columns per bent
= 6,638 / 2 / 2
= 1,660 kips

Note that a more sophisticated analysis to determine the tributary seismic mass would be necessary if the bridge were not symmetric and the bents did not have equal stiffness.

Determine M_{ne}:

Section 8.5 of the *AASHTO Guide Specifications for LRFD Seismic Bridge Design* defines M_{ne} as the expected nominal moment capacity based on the expected concrete and reinforcing steel strengths when the concrete strain reaches a magnitude of 0.003. Section Designer in SAP2000 can be used to determine M_{ne} by performing a moment-curvature analysis and displaying the moment when the concrete reaches a strain of 0.003. The moment-curvature diagram for the column section is shown in Figure 5.2-1 with values displayed at a concrete strain of 0.002989 (**Define menu > Section Properties > Frame Sections > *select* COL > *click* Modify/Show**

Property *button* > *click* Section Designer *button* > Display menu > Show Moment-Curvature Curve).

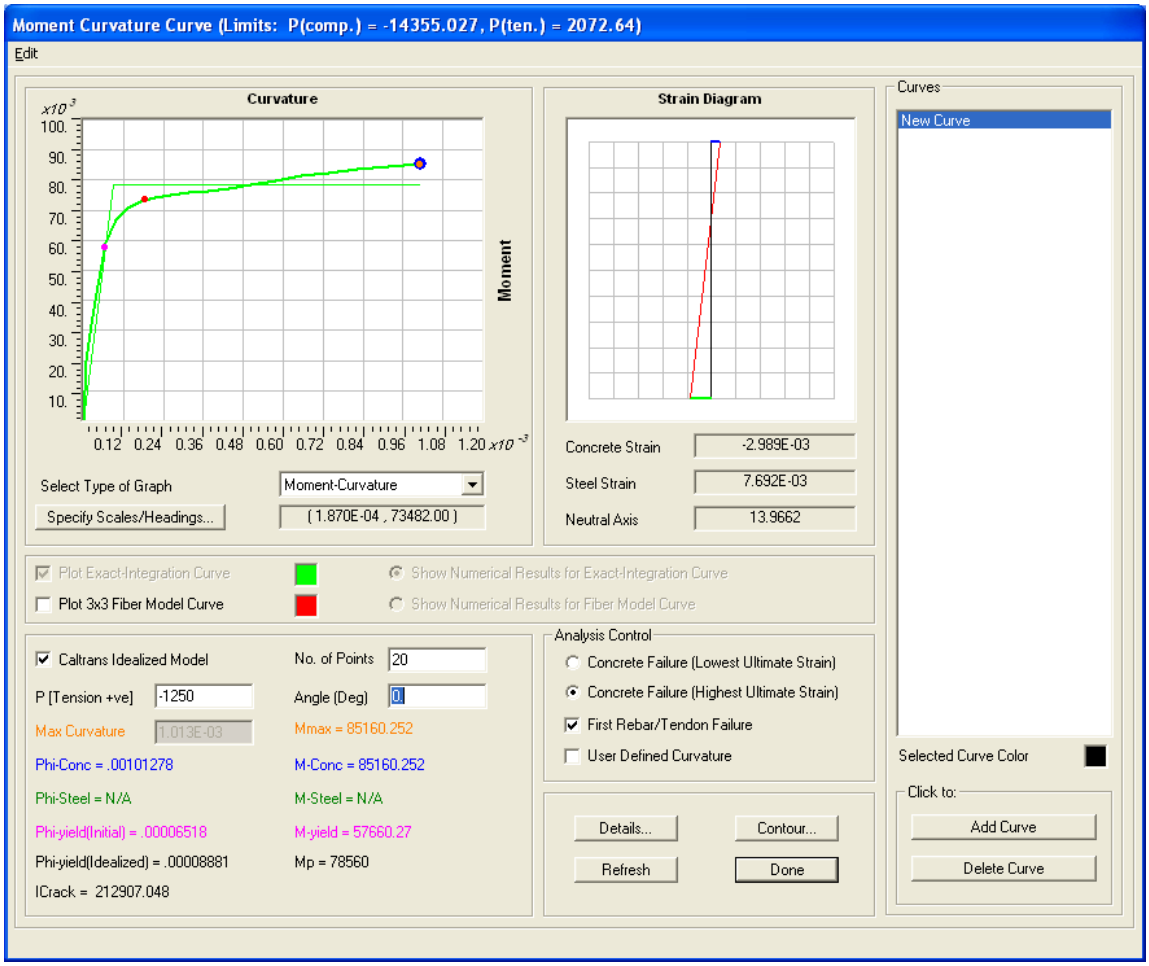

Moment-Curvature Curve for Frame Section "COL" at $\varepsilon_c = 0.003$
Figure 5.2-1

It is seen in Figure 5.2-1 that M_{ne} = 73,482 kip-inches.

Perform Check:

$0.1\ P_{trib}\ (H_h + 0.5\ D_s) / \Lambda$ = 0.1 * 1,660 * (408 + 0.5 * 85) / 2
= 37,392 kip-in. < 73,482 kip-in. = M_{ne} => Okay

5.3 Structure Displacement Demand/Capacity Check

The requirements of Section 4.8 of the *AASHTO Guide Specifications for LRFD Seismic Bridge Design* must be satisfied. The requirement is as follows:

$$\Delta^{L}_{D} < \Delta^{L}_{C}$$

Where:

Δ^{L}_{D} = displacement demand taken along the local principal axis of the ductile member (in.)

Δ^{L}_{C} = displacement capacity taken along the local principal axis corresponding to Δ^{L}_{D} of the ductile member (in.)

5.3.1 Longitudinal Direction

From section 3.3.2.1, the displacement demand in the longitudinal direction is $\Delta^{L}_{D\_Long} = 8.73$ inches.

Determine $\Delta^{L}_{C\_Long}$:

The displacement capacity can be determined from the pushover curve as show in Figure 5.3.1-1 (**Display menu > Show Static Pushover Curve**).

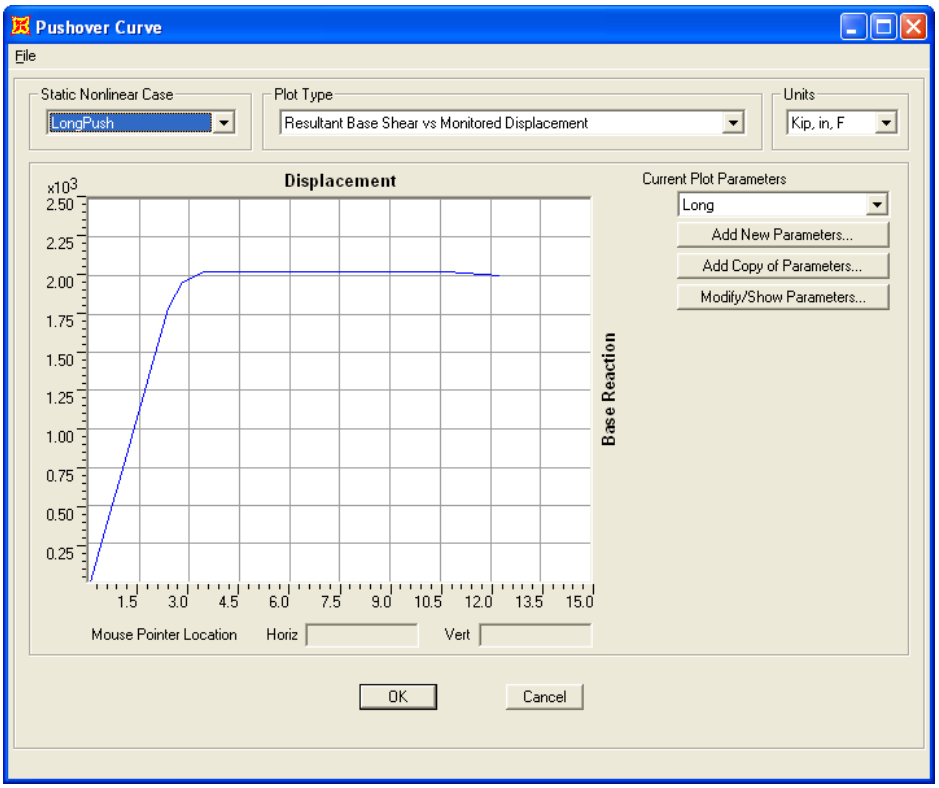

Pushover Curve for Load Case "LongPush"

Figure 5.3.1-1

The displacement at which the first hinge ruptures (fails) is the displacement capacity of the structure and is also the point at which the base shear begins to decrease. It can be seen in Figure 5.3.1-1 that the base shear does not decrease until a displacement of approximately 11 inches. This suggests the displacement capacity of the bridge in the longitudinal direction is greater than

the displacement demand. To confirm this, the table shown in Figure 5.3.1-2 can be displayed by clicking **File menu > Display Tables** in Figure 5.3.1-1.

Table Display

File Edit

Pushover Curve - LongPush

Step	Displacemer	BaseForce	AtoB	BtoIO	IOtoLS	LStoCP	CPtoC	CtoD	DtoE	BeyondE	Total
	in	Kip									
0	0.041996	0.000	16	0	0	0	0	0	0	0	16
1	0.541996	386.976	16	0	0	0	0	0	0	0	16
2	1.041996	773.952	16	0	0	0	0	0	0	0	16
3	1.541996	1160.928	16	0	0	0	0	0	0	0	16
4	2.041996	1547.905	16	0	0	0	0	0	0	0	16
5	2.347536	1784.379	14	2	0	0	0	0	0	0	16
6	2.793085	1955.096	10	6	0	0	0	0	0	0	16
7	3.293085	2009.869	10	6	0	0	0	0	0	0	16
8	3.449424	2026.995	8	8	0	0	0	0	0	0	16
9	3.949424	2027.072	8	8	0	0	0	0	0	0	16
10	4.449424	2027.149	8	6	2	0	0	0	0	0	16
11	4.949424	2027.227	8	2	6	0	0	0	0	0	16
12	5.449424	2027.304	8	2	6	0	0	0	0	0	16
13	5.949424	2027.381	8	0	8	0	0	0	0	0	16
14	6.449424	2027.459	8	0	8	0	0	0	0	0	16
15	6.949424	2027.536	8	0	2	6	0	0	0	0	16
16	7.449424	2027.613	8	0	2	6	0	0	0	0	16
17	7.949424	2027.691	8	0	0	8	0	0	0	0	16
18	8.449424	2027.768	8	0	0	8	0	0	0	0	16
19	8.949424	2027.845	8	0	0	2	6	0	0	0	16
20	9.449424	2027.923	8	0	0	2	6	0	0	0	16
21	9.949424	2028.000	8	0	0	0	8	0	0	0	16
22	10.449424	2028.077	8	0	0	0	8	0	0	0	16
23	10.690280	2028.114	8	0	0	0	6	0	0	2	16
24	12.288808	2000.729	8	0	0	0	0	0	0	8	16

Current Sort String

Current Filter String

Done

Pushover Curve Tabular Data for Load Case "LongPush"

Figure 5.3.1-2

Figure 5.3.1-2 shows the step, displacement, base force, and hinge state data for the longitudinal pushover analysis. By definition, hinges fail if they are in the "Beyond E" hinge state. In Figure 5.3.1-2 it can be seen that step 23 is the first step any hinges reach the "Beyond E" hinge state. Therefore, $\Delta^{L}_{C\_Long}$ = 10.69 inches and the following can be stated:

$\Delta^{L}_{C\_Long}$ = 10.69 in. > $\Delta^{L}_{D\_Long}$ = 8.76 in. => Longitudinal Displacement Demand/Capacity is Okay

5.3.2 Transverse Direction

From Section 3.3.2.2 of this example, the displacement demand in the transverse direction is $\Delta^{L}_{D\_Trans}$ = 6.07 inches.

Determine $\Delta^{L}_{C\_Trans}$:

The displacement capacity can be determined from the pushover curve as show in Figure 5.3.2-1 (**Display menu > Show Static Pushover Curve**).

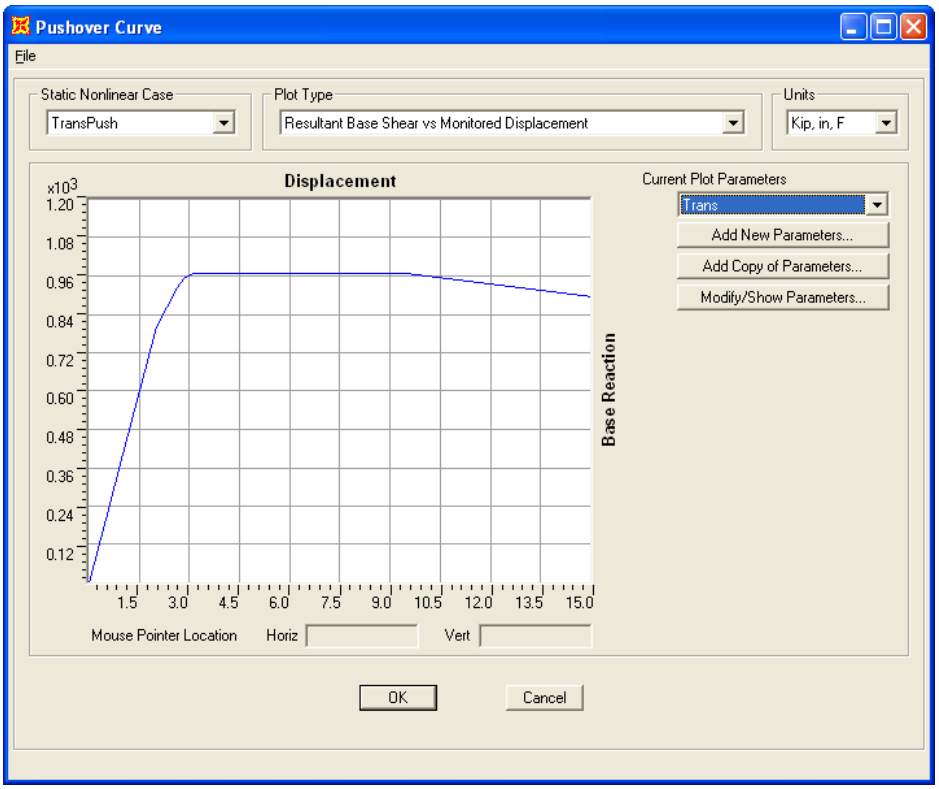

Pushover Curve for Load Case "TransPush"
Figure 5.3.2-1

As mentioned above, the displacement at which the first plastic hinge ruptures (fails) is the displacement capacity of the structure and is also the point at which the base shear begins to decrease. It can be seen in Figure 5.3.2-1 that the base shear does not decrease until a displacement of approximately 9.5 inches. This suggests the displacement capacity of the bridge in the transverse direction is greater than the displacement demand. To confirm this, the table shown in Figure 5.3.2-2 can be displayed by clicking **File menu > Display Tables** in Figure 5.3.2-1.

Table Display

File Edit

Pushover Curve - TransPush

Step	Displacemer	BaseForce	AtoB	BtoIO	IOtoLS	LStoCP	CPtoC	CtoD	DtoE	BeyondE	Total
	in	Kip									
0	6.954E-14	0.000	16	0	0	0	0	0	0	0	16
1	0.500000	200.397	16	0	0	0	0	0	0	0	16
2	1.000000	400.794	16	0	0	0	0	0	0	0	16
3	1.500000	601.191	16	0	0	0	0	0	0	0	16
4	1.997909	800.750	15	1	0	0	0	0	0	0	16
5	2.640122	921.742	14	2	0	0	0	0	0	0	16
6	2.817235	952.995	13	3	0	0	0	0	0	0	16
7	3.111880	969.285	12	4	0	0	0	0	0	0	16
8	3.611880	969.285	12	4	0	0	0	0	0	0	16
9	4.111880	969.286	12	4	0	0	0	0	0	0	16
10	4.611880	969.286	12	2	2	0	0	0	0	0	16
11	5.111880	969.286	12	0	4	0	0	0	0	0	16
12	5.611880	969.286	12	0	4	0	0	0	0	0	16
13	6.111880	969.286	12	0	4	0	0	0	0	0	16
14	6.611880	969.286	12	0	2	2	0	0	0	0	16
15	7.111880	969.286	12	0	1	3	0	0	0	0	16
16	7.611880	969.286	12	0	0	4	0	0	0	0	16
17	8.111880	969.286	12	0	0	3	1	0	0	0	16
18	8.611880	969.286	12	0	0	2	2	0	0	0	16
19	9.111880	969.286	12	0	0	2	2	0	0	0	16
20	9.512590	969.287	12	0	0	2	1	1	0	0	16
21	9.512603	969.287	12	0	0	2	1	0	0	1	16
22	78.87421	57.538	12	0	0	0	0	0	0	4	16

Current Sort String

Current Filter String

Done

Pushover Curve Tabular Data for Load Case "TransPush"

Figure 5.3.2-2

Figure 5.3.2-2 shows the step, displacement, base force, and hinge state data for the transverse pushover analysis. Recall the transverse pushover analysis only includes a single bent. By definition, hinges fail if they are in the "Beyond E" hinge state. In Figure 5.3.2-2 it can be seen that step 21 is the first step any hinges reach the "Beyond E" hinge state. Therefore, $\Delta^{L}_{C\_Trans}$ = 9.51 inches and the following can be stated:

$\Delta^{L}_{C\_Trans}$ = 9.51 in. > $\Delta^{L}_{D\_Trans}$ = 6.07 in. => Transverse Displacement Demand/Capacity is Okay

5.4 Member Ductility Requirement Check

The requirements for hinge ductility demands in Section 4.9 of the *AASHTO Guide Specifications for LRFD Seismic Bridge Design* must be met for all hinges in the structure. The member ductility demand may be computed as follows:

$\mu_D \leq 6$ (for multiple column bents)

Where:

μ_D = ductility demand
$= 1 + \Delta_{pd} / \Delta_{yi}$

Δ_{yi} = idealized yield displacement (does not include soil effects) (in.)
$= \varphi_{yi} * L^2 / 3$

L = length from point of maximum moment to the inflection point (in.)

φ_{yi} = idealized yield curvature (1/in.)

Δ_{pd} = plastic displacement demand (in.)
$= \theta_{pd} * (L - 0.5*L_p)$

θ_{pd} = plastic rotation demand determined by SAP2000 (rad.)

L_p = plastic hinge length (in.)

Therefore:

$\mu_D = 1 + 3 * [\theta_{pd} / (\varphi_{yi} * L)] * (1 - 0.5 * L_p / L)$

This example will explicitly show how to compute the ductility demand for the lower hinge of the trailing column being deflected in the transverse direction. The ductility demands for the remaining hinges are presented in tabular format.

Determine L:

The locations of the inflection points were approximated previously to determine the hinge lengths. However, now that the pushover analysis has been performed, the actual inflection points can be determined.

Figure 5.3.2-2 shows that at step 13 the displacement is 6.11 inches, which is slightly greater than the displacement demand. Figure 5.4-1 shows the column moment 2-2 diagram at step 13 of the TransPush load case as displayed in SAP2000 (**Display menu > Show Forces/Stresses > Frames/Cables >** ***select*** **TransPush >** ***select*** **Moment 2-2 >** ***select*** **Step 13 >** ***click*** **OK** ***button***).

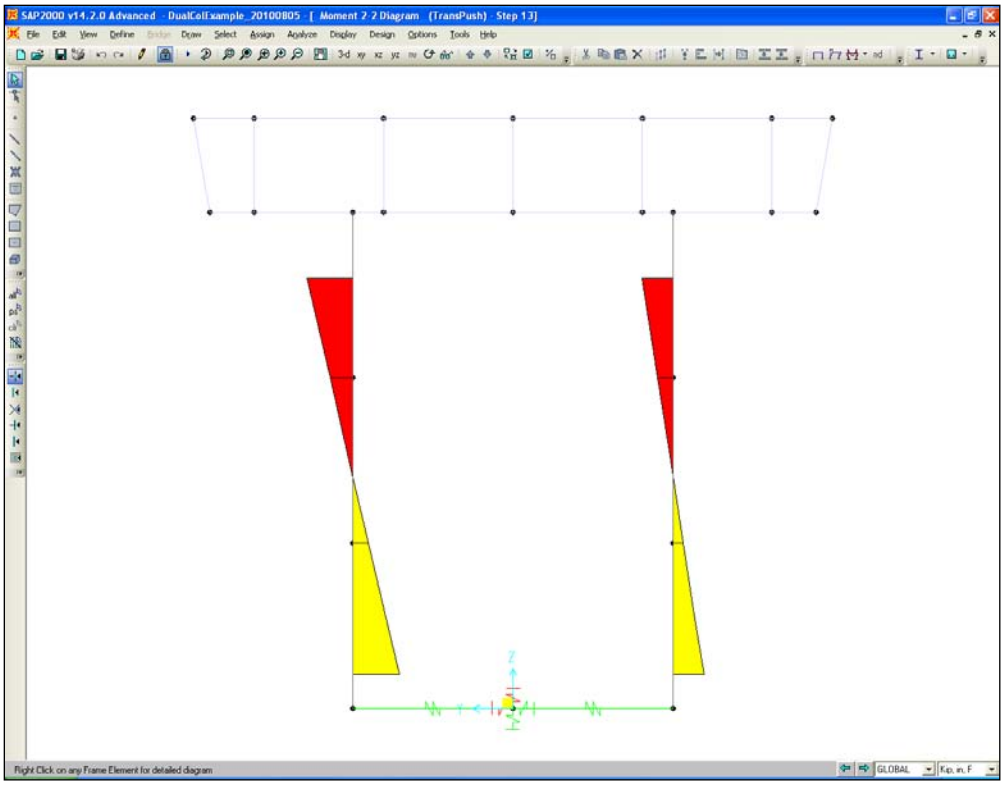

Frame Moment 2-2 Diagram for Load Case "TransPush" at Step 13
Figure 5.4-1

From this information it is found that the inflection point is 59 inches above the lower joint on the middle column element and the following is computed:

L = Length from point of maximum moment at base of column to inflection point
= Length of Lower Element – Footing Offset + 59
= 146 – 30 + 59
= 175 in.

Determine θ_{pd}:

Since the displacement of the bent at step 13 is greater than the displacement demand, the plastic rotation at step 13 is greater than or equal to the plastic rotation demand. The plastic rotation at each step can be found directly from the hinge results in SAP2000. The name of the lower hinge on the trailing column is 1H1. Figure 5.4-2 shows the plastic rotation plot of hinge 1H1 at step 13 of the TransPush load case (**Display menu > Show Hinge Results > *select hinge* 1H1 (Auto P-M2) > *select load case* TransPush > *select step* 13 > *click* OK *button***).

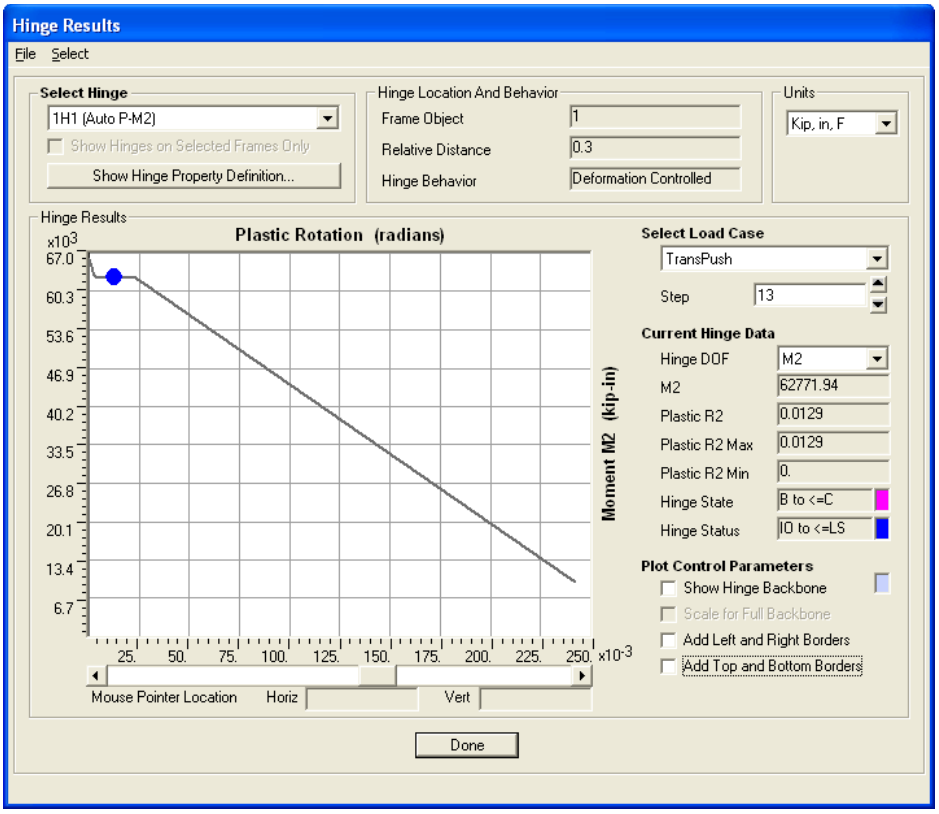

Hinge "1H1" Plastic Rotation Results for Load Case "TransPush" at Step 13
Figure 5.4-2

Figure 5.4-2 shows that the plastic rotation for hinge 1H1 is 0.0129 radians. Therefore θ_{pd} = 0.0129 radians.

Determine φ_{yi}:

The idealized yield curvature will be found by determining the axial load in the hinge at first yield and then inputting that load into Section Designer. The axial load at yield can be found by viewing the hinge results at step 4 (when the hinge first yields). Figure 5.4-3 shows the axial plastic deformation plot of hinge 1H1 at step 4 of the TransPush load case (**Display menu > Show Hinge Results >** ***select hinge*** **1H1 (Auto P-M2) >** ***select load case*** **TransPush >** ***select step*** **4 >** ***select hinge DOF*** **P >** ***click*** **OK** ***button***).

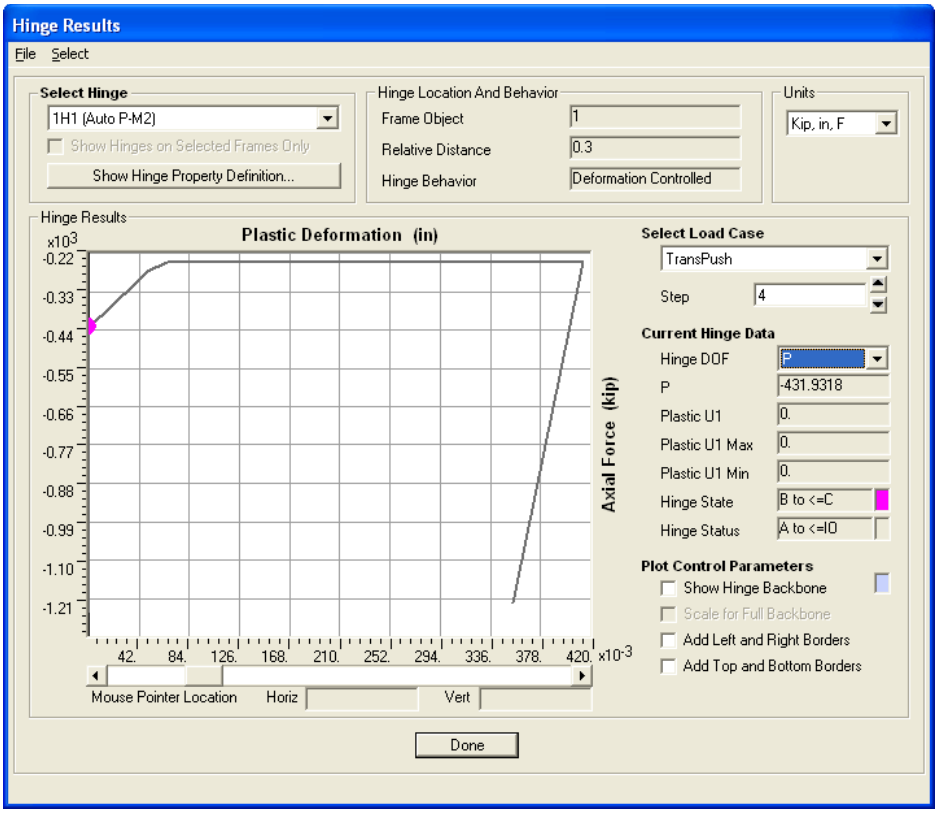

Hinge "1H1" Axial Plastic Deformation Results for Load Case "TransPush" at Step 4

Figure 5.4-3

Figure 5.4-3 shows that the axial load in hinge 1H1 at step 4 of the TransPush load case is -432 kips. That load can now be entered into Section Designer to determine the idealized yield curvature, φ_{yi}. The moment-curvature diagram for the column section with P = -432 kips is shown in Figure 5.4-4 (**Define menu > Section Properties > Frame Sections > *select* COL > *click* Modify/Show Property *button* > *click* Section Designer *button* > Display menu > Show Moment-Curvature Curve**).

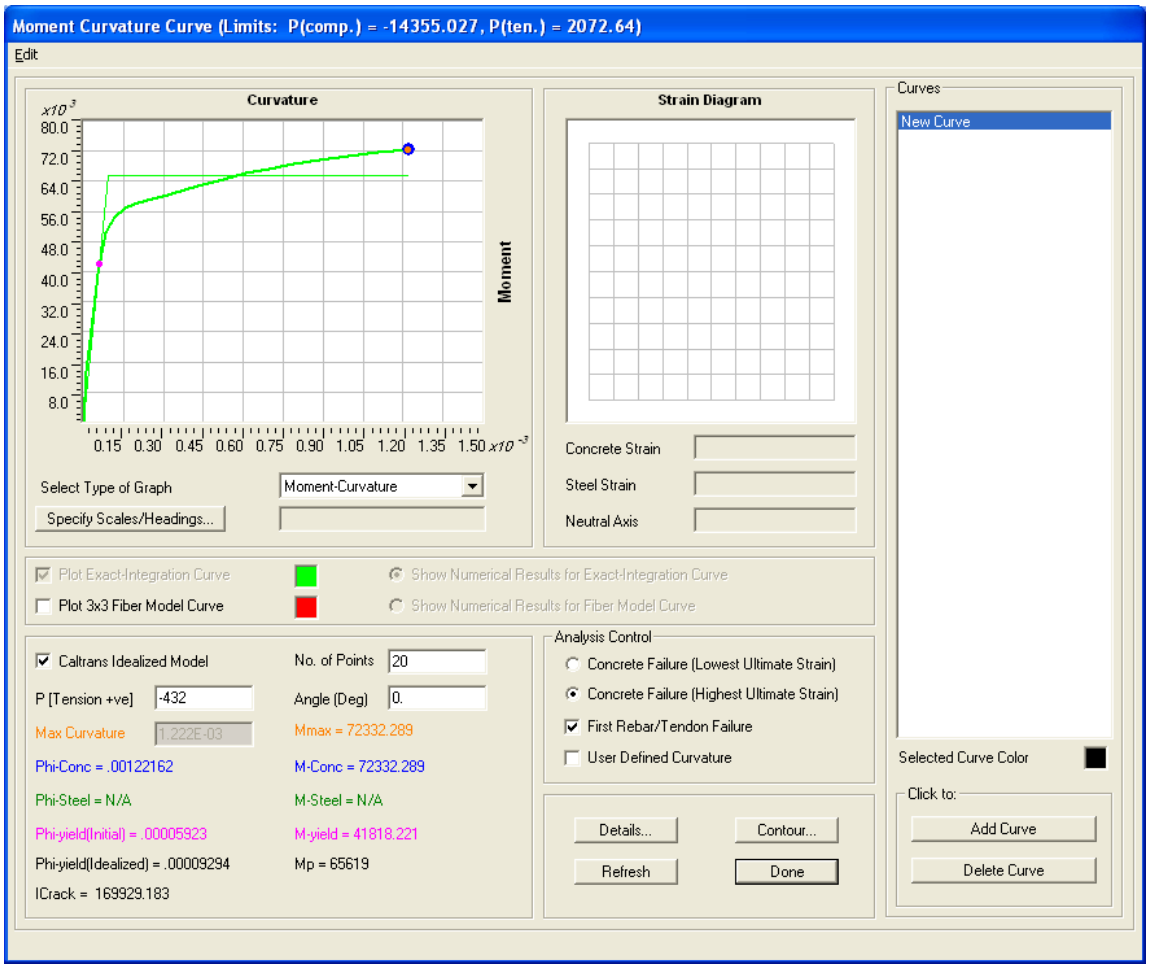

Moment-Curvature Curve for Frame Section "COL" at P = -432 kips
Figure 5.4-4

Figure 5.4-4 shows that Phi-yield(Idealized) = .00009294. Therefore: $\varphi_{yi} = 0.00009294$ inches^{-1}.

The ductility demand in the transverse direction for the lower hinge in the trailing column can now be calculated as follows:

$$\mu_D = 1 + 3 * [\theta_{pd} / (\varphi_{yi} * L)] * (1 - 0.5 * L_p / L)$$

Where:

L = 175 in.

φ_{yi} = 0.00009294 in.$^{-1}$

θ_{pd} = 0.0129 rad.

L_p = 27.0 in.

Therefore:

$$\mu_D = 1 + 3 * [0.0129 / (0.00009294 * 175)] * (1 - 0.5 * 27.0 / 175)$$
$$= 3.2 < 6 \Rightarrow \text{okay}$$

The ductility demands and related values for all column hinges are shown in Table 5.4-1.

Pushover Direction	Column and Hinge Location	Hinge Name	Yield Step	Axial Load at Yield	φ_{yi}	θ_{pd}	L_p	L	μ_D
(Long/Trans)	(-)	(-)	(#)	(kips)	(1/in.)	(rad.)	(in.)	(in.)	(-)
Longitudinal	Trailing Lower	1H2	5	-1222	.0000889	.0207	27.0	175	4.7
Longitudinal	Trailing Upper	3H2	6	-1135	.00008926	.0204	26.9	175	4.6
Longitudinal	Leading Lower	7H2	6	-1354	.00008851	.0195	27.0	175	4.5
Longitudinal	Leading Upper	9H2	8	-1277	.0000887	.0168	26.9	175	4.0
Transverse	Trailing Lower	1H1	4	-432	.00009294	.0129	27.0	175	3.2
Transverse	Trailing Upper	3H1	5	-305	.00009292	.0118	26.9	175	3.0
Transverse	Leading Lower	4H1	6	-2226	.00009185	.0104	27.0	175	2.8
Transverse	Leading Upper	6H1	7	-2253	.00009186	.00902	26.9	175	2.6

Ductility Demands for All Column Hinges
Table 5.4-1

Table 5.4-1 shows that all hinge ductility demands are less than 6.

5.5 Column Shear Demand/Capacity Check

The column shear requirements in Section 8.6 of the *AASHTO Guide Specifications for LRFD Seismic Bridge Design* must be met for all columns in the structure.

$$\varphi_s V_n \geq V_u$$

Where:

φ_s = 0.9
V_n = nominal shear capacity (kips)
= $V_c + V_s$

Concrete Shear Capacity:

V_c = concrete contribution to shear capacity (kips)
= $v_c A_e$

Where:

A_e = 0.8 A_g
A_g = gross area of member cross-section (in.^{2})

v_c if P_u is compressive:

$$v_c = 0.032\ \alpha' \left[1 + P_u / (2\ A_g)\right] f'_c{}^{1/2} \leq \min\left(0.11\ f'_c{}^{1/2},\ 0.047\ \alpha'\ f'_c{}^{1/2}\right)$$

v_c otherwise:

v_c = 0

For circular columns with spiral reinforcing:

$$0.3 \leq \alpha' = f_s / 0.15 + 3.67 - \mu_D \leq 3$$
$f_s = \rho_s f_{yh} \leq 0.35$
$\rho_s = (4\ A_{sp}) / (s\ D')$

Where:

P_u = ultimate compressive force acting on section (kips)
A_{sp} = area of spiral (in.^{2})
s = pitch of spiral (in.)
D' = diameter of spiral (in.)
f_{yh} = nominal yield stress of spiral (ksi)
f'_c = nominal concrete strength (ksi)
μ_D = maximum local ductility demand of member

Steel Shear Capacity:

V_s = steel contribution to shear capacity (kips)
$V_s = (\pi / 2)\ (A_{sp}\ f_{yh}\ D') / s$

This example will explicitly show how to perform the shear demand/capacity check for the trailing column being deflected in the transverse direction. The shear demand/capacity checks for the remaining columns are presented in tabular format.

Determine V_u:

Figure 5.5-1 shows the column shear diagram for the TransPush load case as displayed in SAP2000 (**Display menu > Show Forces/Stresses > Frames/Cables > *select* TransPush > *select* Shear 3-3 > *select* Step 13 > *click* OK *button***).

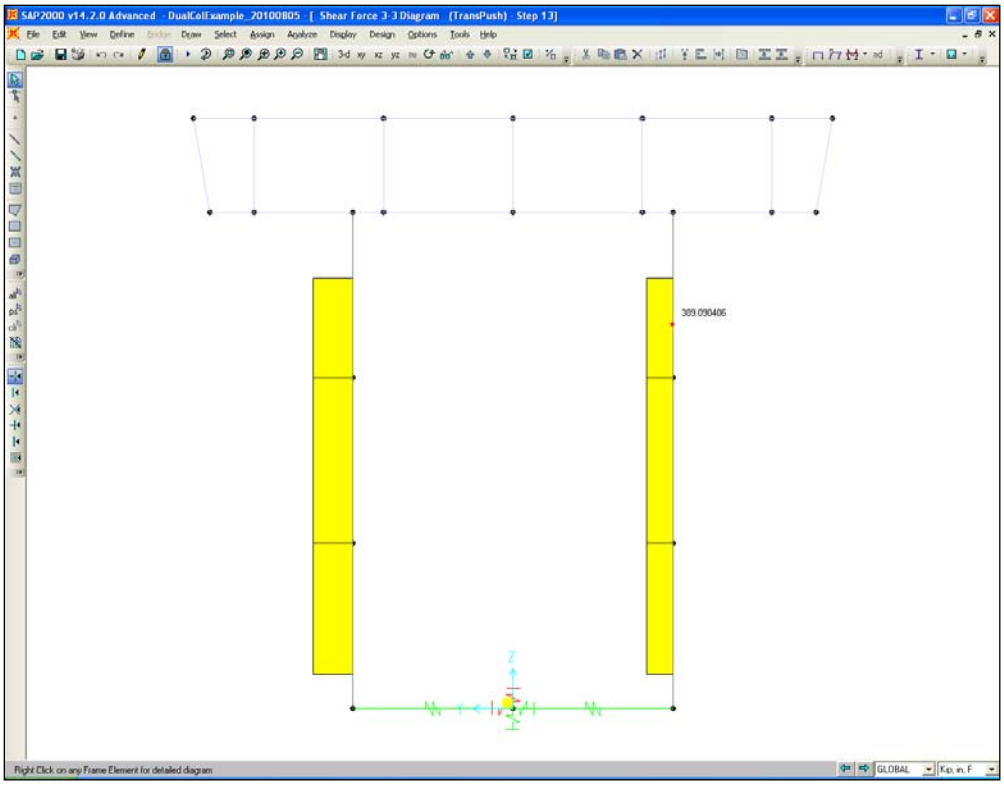

Frame Shear 3-3 Diagram for Load Case "TransPush" at Step 13
Figure 5.5-1

From Figure 5.5-1 it is determined that the plastic shear in the trailing column is 389 kips. Section 8.6.1 states that V_u shall be determined on the basis of V_{po}, which is the shear associated with the overstrength moment, M_{po}, defined in Section 8.5 of the *AASHTO Guide Specifications for LRFD Seismic Bridge Design*. For ASTM A 706 reinforcement the overstrength magnifier is 1.2, and so the shear for the SAP2000 model must be multiplied by this factor.

Therefore:

$$V_u = \lambda_{mo} V_p$$

Where:

$\lambda_{po} = 1.2$
$V_p = 389$ kips

and

$V_u = 1.2 * 389$
$= 467$ kips

Determine V_c:

Figure 5.5-2 shows the column axial load diagram for the TransPush load case as displayed in SAP2000 (**Display menu > Show Forces/Stresses > Frames/Cables > *select* TransPush > *select* Axial Force > *select* Step 13 > *click* OK *button***).

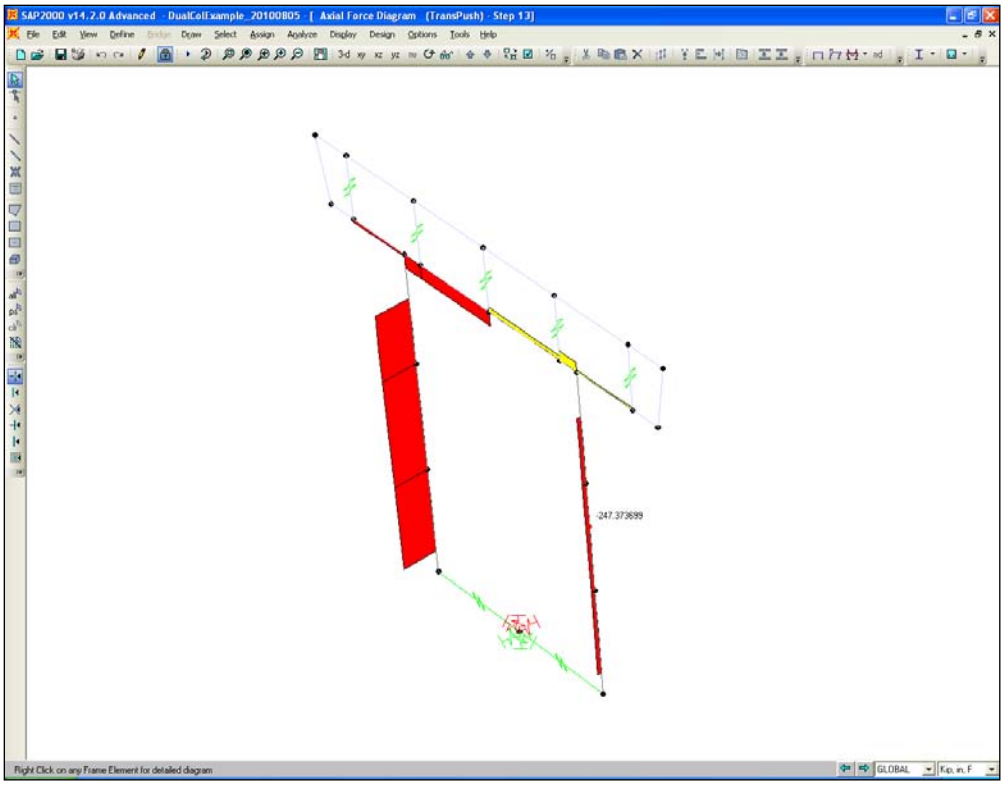

Frame Axial Force Diagram for Load Case "TransPush" at Step 13
Figure 5.5-2

From Figure 5.5-2 it is determined that the axial force in the trailing column is -247 kips.

Therefore:

P_u = 247 kips

A_g = $\pi * 60^2 / 4$
= 2827.4 $in.^2$

A_e = $0.8\ A_g$
= $0.8 * 2827.4$
= 2262 $in.^2$

A_{sp} = 0.44 $in.^2$

s = 3.5 in.

D' = 60 – 1.5 – 1.5 – 0.75
= 56.25 in.

f_{yh} = 60 ksi

f'_c = 4 ksi

ρ_s = $(4\ A_{sp}) / (s\ D')$
= $(4 * 0.44) / (3.5 * 56.25)$
= 0.0089

f_s = $\rho_s f_{yh} \leq 0.35$
= $0.0089 * 60 \leq 0.35$
= $0.54 \leq 0.35$
= 0.35 ksi

μ_D = 3.2 (see Section 5.4 of this example)

$0.3 \le \alpha'$ $= f_s / 0.15 + 3.67 - \mu_D \le 3$
$= 0.35 / 0.15 + 3.67 - 3.2 \le 3$
$= 0.35 / 0.15 + 3.67 - 3.2 \le 3$
$= 2.8 \le 3$

α' = 2.8

v_c $= 0.032\ \alpha' [1 + P_u / (2\ A_g)]\ f'_c{}^{1/2} \le \min (0.11\ f'_c{}^{1/2} , 0.047\ \alpha'\ f'_c{}^{1/2})$
$= 0.032 * 2.8 * [1 + 247 / (2 * 2827.4)]\ 4^{1/2} \le \min (0.11 * 4^{1/2}, 0.047 * 2.8 * 4^{1/2})$
$= 0.187 \le \min (0.22 , 0.263)$
$= 0.187$ ksi

V_c $= v_c A_e$
$= 0.187 * 2262$
$= 423$ kips

Determine V_s:

V_s $= (\pi / 2)\ (A_{sp}\ f_{yh}\ D') / s$
$= (\pi / 2)\ (0.44 * 60 * 56.25) / 3.5$
$= 666$ kips

Determine $\varphi_s V_n$:

$\varphi_s V_n$ $= \varphi_s\ (V_c + V_s)$
$= 0.9 * (423 + 666)$
$= 980$ kips $> V_u = 467$ kips => okay

The shear demands and capacities and related values for all columns are shown in Table 5.5-1.

Pushover Direction	Column	V_p	V_u	P_u	μ_D	α'	v_c	V_c	V_s	$\varphi_s V_n$
(Long/Trans)	(-)	(kips)	(kips)	(kips)	(-)	(-)	(ksi)	(kips)	(kips)	(kips)
Longitudinal	Trailing	484	581	1175	4.7	1.3	0.10	228	666	804
Longitudinal	Leading	497	596	1320	4.5	1.5	0.12	268	666	841
Transverse	Trailing	389	467	247	3.2	2.8	0.19	423	666	980
Transverse	Leading	580	696	2253	2.8	3.0	0.22	498	666	1047

Column Shear Demands and Capacities
Table 5.5-1

Table 5.5-1 shows that the shear capacities are greater than the shear demands for all columns.

5.6 Balanced Stiffness and Frame Geometry Requirement Check

The balanced stiffness and balanced frame geometry requirements of Sections 4.1.2 and 4.1.3 of the *AASHTO Guide Specifications for LRFD Seismic Bridge Design* must be met. Due to the symmetry of this example, these requirements are okay by inspection. However, on many bridges these requirements may highly influence the design.

Chapter 5 Concrete Structures Contents

5.0 General 5.0-1

5.1 Materials 5.1-1
- 5.1.1 Concrete 5.1-1
- 5.1.2 Reinforcing Steel 5.1-6
- 5.1.3 Prestressing Steel 5.1-9
- 5.1.4 Prestress Losses 5.1-13
- 5.1.5 Prestressing Anchorage Systems 5.1-16
- 5.1.6 Post-tensioning Ducts 5.1-16

5.2 Design Considerations 5.2-1
- 5.2.1 Service and Fatigue Limit States 5.2-1
- 5.2.2 Strength-Limit State 5.2-2
- 5.2.3 Strut-and-tie Model 5.2-7
- 5.2.4 Deflection and Camber 5.2-7
- 5.2.5 Construction Joints 5.2-9
- 5.2.6 Inspection Lighting and Access 5.2-10

5.3 Reinforced Concrete Box Girder Bridges 5.3-1
- 5.3.1 Box Girder Basic Geometries 5.3-1
- 5.3.2 Reinforcement 5.3-5
- 5.3.3 Crossbeam 5.3-13
- 5.3.4 End Diaphragm 5.3-16
- 5.3.5 Dead Load Deflection and Camber 5.3-18
- 5.3.6 Thermal Effects 5.3-19
- 5.3.7 Hinges 5.3-19
- 5.3.8 Drain Holes 5.3-19

5.4 Hinges and Inverted T-Beam Pier Caps 5.4-1

5.5 Bridge Widenings 5.5-1
- 5.5.1 Review of Existing Structures 5.5-1
- 5.5.2 Analysis and Design Criteria 5.5-2
- 5.5.3 Removing Portions of the Existing Structure 5.5-5
- 5.5.4 Attachment of Widening to Existing Structure 5.5-5
- 5.5.5 Expansion Joints 5.5-17
- 5.5.6 Possible Future Widening for Current Designs 5.5-18
- 5.5.7 Bridge Widening Falsework 5.5-18
- 5.5.8 Existing Bridge Widenings 5.5-18

5.6 Precast Prestressed Girder Superstructures 5.6-1
5.6.1 WSDOT Standard Girder Types 5.6-1
5.6.2 Design Criteria 5.6-3
5.6.3 Fabrication and Handling 5.6-11
5.6.4 Superstructure Optimization 5.6-15
5.6.5 Repair of Damaged Girders at Fabrication 5.6-18
5.6.6 Repair of Damaged Girders in Existing Bridges 5.6-18
5.6.7 Short Span Precast Prestressed Bridges 5.6-21
5.6.8 Precast Prestressed Concrete Tub Girders 5.6-22
5.6.9 Prestressed Girder Checking Requirement 5.6-23
5.6.10 Review of Shop Plans for Pretensioned Girders 5.6-23

5.7 Deck Slabs 5.7-1
5.7.1 Deck Slab Requirements 5.7-1
5.7.2 Deck Slab Reinforcement 5.7-2
5.7.3 Stay-in-place Deck Panels 5.7-6
5.7.4 Bridge Deck Protection 5.7-7
5.7.5 Bridge Deck HMA Paving Design Policies 5.7-12

5.8 Cast-in-place Post-tensioned Bridges 5.8-1
5.8.1 Design Parameters 5.8-1
5.8.2 Analysis 5.8-8
5.8.3 Post-tensioning 5.8-9
5.8.4 Shear and Anchorages 5.8-14
5.8.5 Temperature Effects 5.8-15
5.8.6 Construction 5.8-16
5.8.7 Post-tensioning Notes — Cast-in-place Girders 5.8-17

5.9 Spliced Precast Girders 5.9-1
5.9.1 Definitions 5.9-1
5.9.2 WSDOT Criteria for Use of Spliced Girders 5.9-2
5.9.3 Girder Segment Design 5.9-2
5.9.4 Joints Between Segments 5.9-2
5.9.5 Review of Shop Plans for Precast Post-tensioned Spliced-girders 5.9-7
5.9.6 Post-tensioning Notes — Precast Post-tensioning Spliced-Girders 5.9-8

5.99 References 5.99-1

Appendix 5.1-A1 Standard Hooks 5.1-A1-1
Appendix 5.1-A2 Minimum Reinforcement Clearance and Spacing for Beams and Columns 5.1-A2-1
Appendix 5.1-A3 Reinforcing Bar Properties 5.1-A3-1
Appendix 5.1-A4 Tension Development Length of Deformed Bars 5.1-A4-1
Appendix 5.1-A5 Compression Development Length and Minimum Lap Splice of Grade 60 Bars 5.1-A5-1
Appendix 5.1-A6 Tension Development Length of 90º and 180º Standard Hooks 5.1-A6-1
Appendix 5.1-A7 Tension Lap Splice Lengths of Grade 60 Bars — Class B 5.1-A7-1
Appendix 5.1-A8 Prestressing Strand Properties and Development Length 5.1-A8-1
Appendix 5.2-A1 Working Stress Design 5.2-A1-1
Appendix 5.2-A2 Working Stress Design 5.2-A2-1
Appendix 5.2-A3 Working Stress Design 5.2-A3-1
Appendix 5.3-A1 Positive Moment Reinforcement 5.3-A1-1
Appendix 5.3-A2 Negative Moment Reinforcement 5.3-A2-1

Appendix 5.3-A3	Adjusted Negative Moment Case I (Design for M at Face of Support)	5.3-A3-1
Appendix 5.3-A4	Adjusted Negative Moment Case II (Design for M at ¼ Point)	5.3-A4-1
Appendix 5.3-A5	Cast-In-Place Deck Slab Design for Positive Moment Regions f'_c = 4.0 ksi	5.3-A5-1
Appendix 5.3-A6	Cast-In-Place Deck Slab Design for Negative Moment Regions f'_c = 4.0 ksi	5.3-A6-1
Appendix 5.3-A7	Slab Overhang Design-Interior Barrier Segment	5.3-A7-1
Appendix 5.3-A8	Slab Overhang Design-End Barrier Segment	5.3-A8-1
Appendix 5.6-A1-1	Span Capability of W Girders	5.6-A1-1
Appendix 5.6-A1-2	Span Capability of WF Girders	5.6-A1-2
Appendix 5.6-A1-3	Span Capability of Bulb Tee Girders	5.6-A1-3
Appendix 5.6-A1-4	Span Capability of Deck Bulb Tee Girders	5.6-A1-4
Appendix 5.6-A1-5	Span Capability of Slab Girders with 5″ CIP Topping	5.6-A1-5
Appendix 5.6-A1-6	Span Capability of Trapezoidal Tub Girders without Top Flange	5.6-A1-6
Appendix 5.6-A1-7	Span Capability of Trapezoidal Tub Girders with Top Flange	5.6-A1-7
Appendix 5.6-A1-8	Span Capability of Post-tensioned Spliced I-Girders	5.6-A1-8
Appendix 5.6-A1-9	Span Capability of Post-tensioned Spliced Tub Girders	5.6-A1-9
Appendix 5.6-A1-10	I-Girder Sections	5.6-A1-10
Appendix 5.6-A1-11	Short Spam and Deck Girder Sections	5.6-A1-11
Appendix 5.6-A1-12	Spliced Girder Sections	5.6-A1-12
Appendix 5.6-A1-13	Tub Girder Sections	5.6-A1-13
Appendix 5.6-A2-1	Single Span Prestressed Girder Construction Sequence	5.6-A2-1
Appendix 5.6-A2-2	Multiple Span Prestressed Girder Construction Sequence	5.6-A2-2
Appendix 5.6-A2-3	Raised Crossbeam Prestressed Girder Construction Sequence	5.6-A2-3
Appendix 5.6-A3-1	W42G Girder Details 1 of 2	5.6-A3-1
Appendix 5.6-A3-2	W42G Girder Details 2 of 2	5.6-A3-2
Appendix 5.6-A3-3	W50G Girder Details 1 of 2	5.6-A3-3
Appendix 5.6-A3-4	W50G Girder Details 2 of 2	5.6-A3-4
Appendix 5.6-A3-5	W58G Girder Details 1 of 3	5.6-A3-5
Appendix 5.6-A3-6	W58G Girder Details 2 of 3	5.6-A3-6
Appendix 5.6-A3-7	W58G Girder Details 3 of 3	5.6-A3-7
Appendix 5.6-A3-8	W74G Girder Details 1 of 3	5.6-A3-8
Appendix 5.6-A3-9	W74G Girder Details 2 of 3	5.6-A3-9
Appendix 5.6-A3-10	W74G Girder Details 3 of 3	5.6-A3-10
Appendix 5.6-A4-1	WF Girder Schedule	5.6-A4-1
Appendix 5.6-A4-2	WF36G Girder Details 1 of 3	5.6-A4-2
Appendix 5.6-A4-3	WF42G Girder Details 1 of 3	5.6-A4-3
Appendix 5.6-A4-4	WF50G Girder Details 1 of 3	5.6-A4-4
Appendix 5.6-A4-5	WF58G Girder Details 1 of 3	5.6-A4-5
Appendix 5.6-A4-6	WF66G Girder Details 1 of 3	5.6-A4-6
Appendix 5.6-A4-7	WF74G Girder Details 1 of 3	5.6-A4-7
Appendix 5.6-A4-8	WF83G Girder Details 1 of 3	5.6-A4-8
Appendix 5.6-A4-9	WF95G Girder Details 1 of 3	5.6-A4-9
Appendix 5.6-A4-10	WF100G Girder Details 1 of 3	5.6-A4-10
Appendix 5.6-A4-11	WF Girder Details 2 of 3	5.6-A4-11
Appendix 5.6-A4-12	WF Girder Details 3 of 3	5.6-A4-12
Appendix 5.6-A4-13	Additional Extended Strands	5.6-A4-13
Appendix 5.6-A4-14	End Diaphragm Details	5.6-A4-14
Appendix 5.6-A4-15	L Abutment End Diaphragm Details	5.6-A4-15
Appendix 5.6-A4-16	Flush Diaphragm at Intermediate Pier Details	5.6-A4-16
Appendix 5.6-A4-17	Recessed Diaphragm at Intermediate Pier Details	5.6-A4-17
Appendix 5.6-A4-18	Hinge Diaphragm at Intermediate Pier Details	5.6-A4-18
Appendix 5.6-A4-19	Partial Intermediate Diaphragm Details	5.6-A4-19
Appendix 5.6-A4-20	Full Intermediate Diaphragm Details	5.6-A4-20
Appendix 5.6-A4-21	I Girder Bearing Details	5.6-A4-21

Appendix 5.6-A5-1 W32BTG Girder Details 1 of 3 . . . . . 5.6-A5-1
Appendix 5.6-A5-2 W38BTG Girder Details 1 of 3 . . . . . 5.6-A5-2
Appendix 5.6-A5-3 W62BTG Girder Details 1 of 3 . . . . . 5.6-A5-3
Appendix 5.6-A5-4 Bulb Tee Girder Details 2 of 3. . . . . 5.6-A5-4
Appendix 5.6-A5-5 Bulb Tee Girder Details 3 of 3. . . . . 5.6-A5-5
Appendix 5.6-A6-1 Deck Bulb Tee Girder Schedule 5.6-A6-1
Appendix 5.6-A6-2 Deck Bulb Tee Girder Details 1 of 2 . . . . . 5.6-A6-2
Appendix 5.6-A6-3 Deck Bulb Tee Girder Details 2 of 2 . . . . . 5.6-A6-3
Appendix 5.6-A8-1 Slab Girder Schedule 5.6-A8-1
Appendix 5.6-A8-2 12″ Slab Girder Details 1 of 2 . . . . . 5.6-A8-2
Appendix 5.6-A8-3 18″ Slab Girder Details 1 of 2 . . . . . 5.6-A8-3
Appendix 5.6-A8-4 26″ Slab Girder Details 1 of 2 . . . . . 5.6-A8-4
Appendix 5.6-A8-5 30″ Slab Girder Details 1 of 2 . . . . . 5.6-A8-5
Appendix 5.6-A8-6 36″ Slab Girder Details 1 of 2 . . . . . 5.6-A8-6
Appendix 5.6-A8-7 Slab Girder Details 2 of 2 . . . . . 5.6-A8-7
Appendix 5.6-A8-8 Slab Girder Fixed Diaphragm 5.6-A8-8
Appendix 5.6-A8-9 Slab Girder Hinge Diaphragm. 5.6-A8-9
Appendix 5.6-A8-10 Slab Girder End Pier 5.6-A8-10
Appendix 5.6-A9-1 Tub Girder Schedule and Notes. 5.6-A9-1
Appendix 5.6-A9-2 Tub Girder Details 1 of 3 . . . . . 5.6-A9-2
Appendix 5.6-A9-3 Tub Girder Details 2 of 3 . . . . . 5.6-A9-3
Appendix 5.6-A9-4 Tub Girder Details 3 of 3 . . . . . 5.6-A9-4
Appendix 5.6-A9-5 Tub Girder End Diaphragm on Girder Details. 5.6-A9-5
Appendix 5.6-A9-6 Tub Girder Raised Crossbeam Details 5.6-A9-6
Appendix 5.6-A9-7 Tub S-I-P Deck Panel Girder End Diaphragm on Girder Details 5.6-A9-7
Appendix 5.6-A9-8 Tub S-I-P Deck Panel Girder Raised Crossbeam Details 5.6-A9-8
Appendix 5.6-A9-9 Tub Girder Bearing Details. 5.6-A9-9
Appendix 5.6-A10-1 SIP Deck Panel Details. 5.6-A10-1
Appendix 5.9-A1-1 WF74PTG Spliced Girders Details 1 of 5. . . . . 5.9-A1-1
Appendix 5.9-A1-2 WF74PTG Spliced Girder Details 2 of 5 . . . . . 5.9-A1-2
Appendix 5.9-A1-3 Spliced Girder Details 3 of 5. . . . . 5.9-A1-3
Appendix 5.9-A1-4 WF74PTG Girder Details 4 of 5 . . . . . 5.9-A1-4
Appendix 5.9-A1-5 Spliced Girder Details 5 of 5. . . . . 5.9-A1-5
Appendix 5.9-A2-1 WF83PTG Spliced Girder Details 1 of 5 . . . . . 5.9-A2-1
Appendix 5.9-A2-2 WF83PTG Spliced Girder Details 2 of 5 . . . . . 5.9-A2-2
Appendix 5.9-A2-4 WF83PTG Spliced Girder Details 4 of 5 . . . . . 5.9-A2-3
Appendix 5.9-A3-1 WF95PTG Spliced Girder Details 1 of 5 . . . . . 5.9-A3-1
Appendix 5.9-A3-2 WF95PTG Spliced Girder Details 2 of 5 . . . . . 5.9-A3-2
Appendix 5.9-A3-4 WF95PTG Spliced Girder Details 4 of 5 . . . . . 5.9-A3-3
Appendix 5.9-A4-1 Tub Spliced Girder Miscellaneous Bearing Details 5.9-A4-1
Appendix 5.9-A4-2 Tub Spliced Girder Details 1 of 5 . . . . . 5.9-A4-2
Appendix 5.9-A4-3 Tub Spliced Girder Details 2 of 5 . . . . . 5.9-A4-3
Appendix 5.9-A4-4 Tub Spliced Girder Details 3 of 5 . . . . . 5.9-A4-4
Appendix 5.9-A4-5 Tub Spliced Girder Details 4 of 5 . . . . . 5.9-A4-5
Appendix 5.9-A4-6 Tub Spliced Girder Details 5 of 5 . . . . . 5.9-A4-6
Appendix 5.9-A4-7 Tub Spliced Girder End Diaphragm on Girder Details. 5.9-A4-7
Appendix 5.9-A4-8 Tub Spliced Girder Raised Crossbeam Details 5.9-A4-8
Appendix 5.9-A5-1 Tub SIP Deck Panel Spliced Girder Details 1 of 5. . . . . 5.9-A5-1
Appendix 5.9-A5-2 Tub SIP Deck Panel Spliced Girder Details 2 of 5. . . . . 5.9-A5-2
Appendix 5.9-A5-3 Tub SIP Deck Panel Spliced Girder Details 3 of 5. . . . . 5.9-A5-3
Appendix 5.9-A5-4 Tub SIP Deck Panel Spliced Girder Details 4 of 5. . . . . 5.9-A5-4
Appendix 5.9-A5-5 Tub SIP Deck Panel Spliced Girder Details 5 of 5. . . . . 5.9-A5-5

Appendix 5.9-A5-6	Tub SIP Deck Panel Girder End Diaphragm on Girder Details	5.9-A5-6
Appendix 5.9-A5-7	Tub SIP Deck Panel Girder Raised Crossbeam Details	5.9-A5-7
Appendix 5-B1	"A" Dimension for Precast Girder Bridges	5-B1-1
Appendix 5-B2	Vacant	5-B2-1
Appendix 5-B3	Existing Bridge Widenings	5-B3-1
Appendix 5-B4	Post-tensioned Box Girder Bridges	5-B4-1
Appendix 5-B5	Simple Span Prestressed Girder Design	5-B5-1
Appendix 5-B6	Cast-in-Place Slab Design Example	5-B6-1
Appendix 5-B7	Precast Concrete Stay-in-place (SIP) Deck Panel	5-B7-1
Appendix 5-B8	W35DG Deck Bulb Tee 48" Wide	5-B8-1
Appendix 5-B9	Prestressed Voided Slab with Cast-in-Place Topping	5-B9-1
Appendix 5-B10	Positive EQ Reinforcement at Interior Pier of a Prestressed Girder	5-B10-1
Appendix 5-B11	LRFD Wingwall Design Vehicle Collision	5-B11-1
Appendix 5-B12	Flexural Strength Calculations for Composite T-Beams	5-B12-1
Appendix 5-B13	Strut-and-Tie Model Design Example for Hammerhead Pier	5-B13-1
Appendix 5-B14	Shear and Torsion Capacity of a Reinforced Concrete Beam	5-B14-1
Appendix 5-B15	Sound Wall Design – Type D-2k	5-B15-1

5.0 General

The provisions in this section apply to the design of cast-in-place (CIP) and precast bridges constructed of normal density concrete and reinforced with mild reinforcing steel and/or prestressing strands or bars. The provisions are based on concrete ultimate compressive strengths of 10.0 ksi or less.

Prior to precast pretensioned and post-tensioned concrete members introduced in the early 1960s, all short and medium span bridges were built as CIP reinforced concrete superstructures. Many of the bridges built before 1960 are still functional, durable, and structurally sound. The service life of some of these early bridges can be extended by widening their decks to accommodate increased traffic demand or to improve safety.

5.1 Materials

Design of concrete structures shall be based on the properties cited herein and in the current AASHTO LRFD Specifications, AASHTO LRFD Bridge Construction Specifications[1], and the WSDOT *Standard Specifications for Road, Bridge, and Municipal Construction*.

5.1.1 Concrete

A. **Strength of Concrete** – Pacific NW aggregates have consistently resulted in excellent concrete strengths, to as much as 10,000 psi in 28 days. The following strengths are normally used for design.

1. **CIP Concrete Bridges** – Since conditions for placing and curing concrete on CIP bridges are not as controlled, as they are for precast bridge sections, a lower concrete strength is used. Class 4000 concrete is typically used for all CIP concrete bridges. Where significant economy can be gained and structural requirements dictate, Class 5000 concrete can be used. Use of Class 5000 or higher requires approval of the Bridge Design Engineer, Bridge Construction Office, and Materials Lab.
2. **Precast Girders** – Nominal 28-day concrete strength (f'_c) for precast girders is 7,000 psi. Where higher strengths would eliminate a line of girders, a maximum of 10,000 psi can be specified.

   The minimum concrete compressive strength at release (f'_{ci}) for each prestressed girder in a bridge is to be calculated and shown in the plans. For a 28-day concrete compressive strength of 7,000 psi, a concrete compressive strength at release of between 3,500 and 6,000 psi shall be specified. For high strength concrete, the compressive strength at release shall be limited to 7,500 psi. Release strengths of up to 8,500 psi can be achieved with extended curing for special circumstances. The specified concrete strength at release should be rounded to the next highest 100 psi.

B. **Classes of Concrete** –

1. **Class 3000** – Used in large sections with light to nominal reinforcement, mass pours, sidewalks, curbs, gutters, and nonstructural concrete guardrail anchors, luminaire bases.
2. **Class 4000** – Used in CIP post-tensioned or conventionally reinforced concrete box girders, slabs, traffic and pedestrian barriers, approach slabs, footings, box culverts, wing walls, curtain walls, retaining walls, columns, and crossbeams.
3. **Class 4000A** – Used for bridge approach slabs.
4. **Class 4000D** – Used for all CIP bridge decks unless otherwise approved by the WSDOT Bridge Design Engineer.
5. **Class 4000P** – Used for CIP pile and shaft.
6. **Class 4000W** – Used underwater in seals.

7. **Class 5000 or higher** – Used in CIP post-tensioned concrete box girder construction or in other special structural applications if significant economy can be gained.

The 28-day compressive design strengths (f'_c) are shown in Table 5.1.1-1.

Classes of Concrete	f'_c (psi)
COMMERCIAL	2300
3000	3000
4000, 4000A, 4000D	4000
4000W	2400*
5000	5000**
6000	6000
4000P	3400***

* 40% reduction from Class 4000.

** Class 5000 concrete is available within a 30-mile radius of Seattle, Spokane, and Vancouver. Outside this 30-mile radius, concrete suppliers do not have the quality control procedures and expertise to supply control Class 5000 concrete.

*** 15% reduction from Class 4000 for piles and shafts.

28-Day Compressive Design Strength
Table 5.1.1-1

C. Relative Compressive Concrete Strength

1. During design or construction of a bridge, it is necessary to determine the strength of concrete at various stages of construction. For instance, Section 6-02.3(17)J of the WSDOT *Standard Specifications* discusses the time at which falsework and forms can be removed to various percentages of the concrete design strength. Occasionally, construction problems will arise which require a knowledge of the relative strengths of concrete at various ages. Table 5.1.1-2 shows the approximate values of the minimum compressive strengths of different classes of concrete at various ages. If the concrete has been cured under continuous moist curing at an average temperature, it can be assumed that these values have been developed.

2. Curing of the concrete (especially in the first 24 hours) has a very important influence on the strength development of concrete at all ages. Temperature affects the rate at which the chemical reaction between cement and water takes place. Loss of moisture can seriously impair the concrete strength.

3. If test strength is above or below that shown in Table 5.1.1-2, the age at which the design strength will be reached can be determined by direct proportion.

   For example, if the relative strength at 10 days is 64% instead of the minimum 70% shown in Table 5.1.1-2, the time it takes to reach the design strength can be determined as follows:

   Let x = relative strength to determine the age at which the concrete will reach the design strength

$$\frac{x}{70} = \frac{100}{64} \quad Therefore, x = 110\% \tag{5.1.1-1}$$

   From Table 5.1.1-2, the design strength should be reached in 40 days.

Age	Relative Strength	Class 5000	Class 4000	Class 3000	Age	Relative Strength	Class 5000	Class 4000	Class 3000
Days	%	ksi	ksi	ksi	Days	%	ksi	ksi	ksi
3	35	1.75	1.40	1.05	20	91	4.55	3.64	2.73
4	43	2.15	1.72	1.29	21	93	4.65	3.72	2.79
5	50	2.50	2.00	1.50	22	94	4.70	3.76	2.82
6	55	2.75	2.20	1.65	23	95	4.75	3.80	2.85
7	59	2.95	2.36	1.77	24	96	4.80	3.84	2.88
8	63	3.15	2.52	1.89	25	97	4.85	3.88	2.91
9	67	3.35	2.68	2.01	26	98	4.90	3.92	2.94
10	70	3.5	2.80	2.10	27	99	4.95	3.96	2.97
11	73	3.65	2.92	2.19	28	100	5.00	4.00	3.00
12	75	3.75	3.00	2.25	30	102	5.10	4.08	3.06
13	77	3.85	3.08	2.31	40	110	5.50	4.40	3.30
14	79	3.95	3.16	2.37	50	115	5.75	4.60	3.45
15	81	4.05	3.24	2.43	60	120	6.00	4.80	3.60
16	83	4.15	3.32	2.49	70	125	6.25	5.00	3.75
17	85	4.25	3.34	2.55	80	129	6.45	5.16	3.87
18	87	4.35	3.48	2.61	90	131	6.55	5.24	3.93
19	89	4.45	3.56	2.67	100	133	6.70	5.40	4.00

Relative and Compressive Strength of Concrete
Table 5.1.1-2

D. **Modulus of Elasticity** – The modulus of elasticity shall be determined as specified in AASHTO LRFD 5.4.2.4. For calculation of the modulus of elasticity, the unit weight of plain concrete (w_c) shall be taken as 0.155 kcf for precast pretensioned or post-tensioned spliced girders and 0.150 kcf for normal-weight concrete. The correction factor (K_1) shall normally be taken as 1.0.

E. **Creep** – The creep coefficient shall be calculated per AASHTO LRFD 5.4.2.3.2. The relative humidity, *H*, may be taken as 75% for standard conditions. The maturity of concrete, *t*, may be taken as 2000 days for standard conditions. The volume-to-surface ratio, *V/S*, is given in Table 5.6.1-1 for standard WSDOT girders.

In determining the maturity of concrete at initial loading, t_i, one day of accelerated curing by steam or radiant heat may be taken as equal to seven days of normal curing.

The final deflection is a combination of the elastic deflection and the creep effect associated with given loads shown by the equation below.

$$\Delta_{total} = \Delta_{elastic}[1 + \psi(t, t_i)] \qquad (5.1.1\text{-}2)$$

Figure 5.1.1-1 provides creep coefficients for a range of typical initial concrete strength values, f'_{ci}, as a function of time from initial seven day steam cure (t_i = 7 days). The figure uses a volume-to-surface, *V/S*, ratio of 3.3 as an average for W-type and tub girders and relative humidity, *H*, equal to 75%.

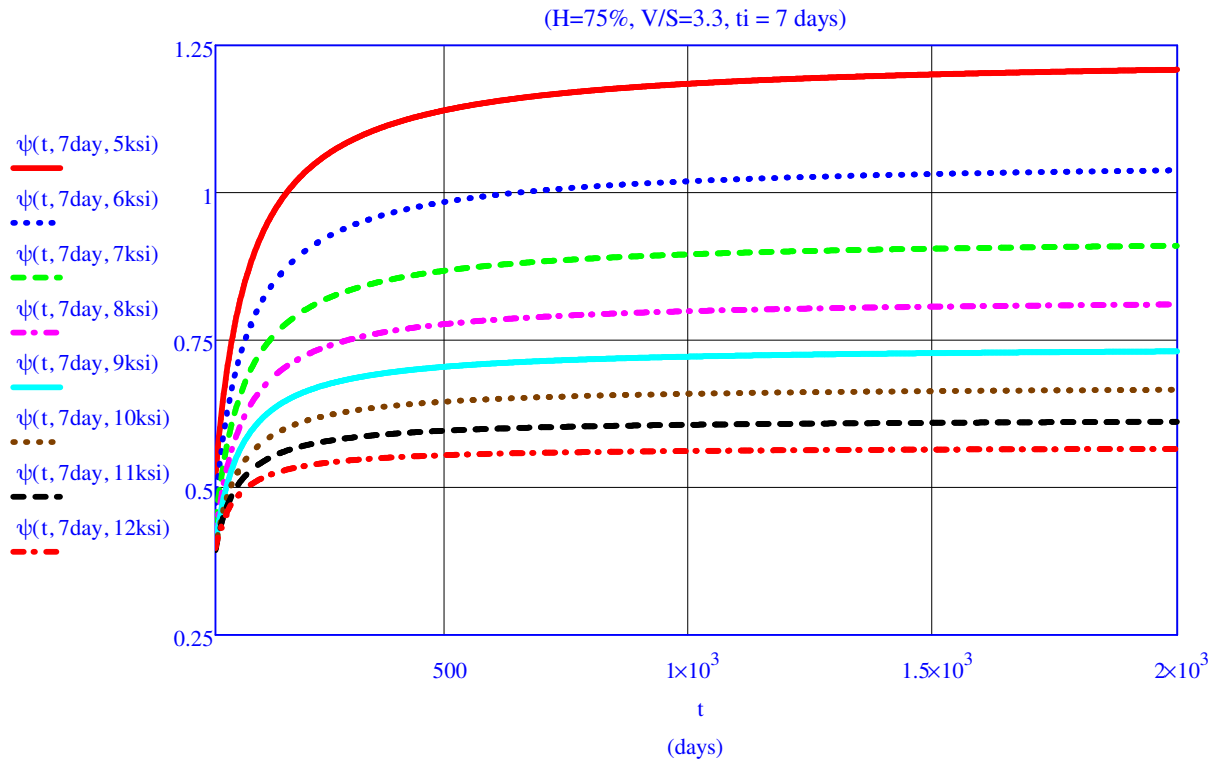

Creep Coefficient for Standard Conditions as Function of Initial Concrete Strength
Figure 5.1.1-1

F. **Shrinkage** – Concrete shrinkage strain, ε_{sh}, shall be calculated per AASHTO LRFD.

G. **Grout** – Grout is usually a prepackaged cement based grout or nonshrink grout that is mixed, placed, and cured as recommended by the manufacturer. It is used under steel base plates for both bridge bearings and luminaries or sign bridge bases. Should the grout pad thickness exceed 4″, steel reinforcement shall be used. For design purposes, the strength of the grout, if properly cured, can be assumed to be equal to or greater than that of the adjacent concrete but not greater than 4000 psi. Nonshrink grout is used in keyways between precast prestressed tri-beams, double-tees, and deck bulb tees (see Standard Specifications Section 6-02.3(25)O for deck bulb tee exception).

H. **Mass Concrete** – Mass concrete is any volume of concrete with dimensions large enough to require that measures be taken to cope with the generation of heat from hydration of the cement and attendant volume change to minimize cracking. Temperature-related cracking may be experienced in thick-section concrete structures, including spread footings, pile caps, bridge piers, crossbeams, thick walls, and other structures as applicable.

Concrete placements with least dimension greater than 6 feet should be considered mass concrete, although smaller placements with least dimension greater than 3 feet may also have problems with heat generation effects. Shafts need not be considered mass concrete.

The temperature of mass concrete shall not exceed 160°F. The temperature difference between the geometric center of the concrete and the center of nearby exterior surfaces shall not exceed 35°F.

Designers could mitigate heat generation effects by specifying construction joints and placement intervals. Designers should consider requiring the Contractor to submit a thermal control plan, which may include such things as:

1. Temperature monitors and equipment.
2. Insulation.
3. Concrete cooling before placement.

4. Concrete cooling after placement, such as by means of internal cooling pipes.
5. Use of smaller, less frequent placements.
6. Other methods proposed by the Contractor and approved by the Engineer.

Concrete mix design optimization, such as using low-heat cement, fly ash or slag cement, low-water/cement ratio, low cementitious materials content, larger aggregate, etc. is acceptable as long as the concrete mix meets the requirements of the standard specifications for the specified concrete class.

The ACI Manual of Concrete Practice Publication 207 and specifications used for the Tacoma Narrows Bridge Project suspension cable anchorages (2003-2006) can be used as references.

I. **Self-Consolidating Concrete (SCC)** – Self-consolidating concrete (SCC) shall not be used in structural members. SCC may be used for other applications such as precast noise wall panels, barriers, three-sided structures, etc. as described in Standard Specification 6-02.3(27).

Designers shall consider potential effects on mechanical and visco-elastic properties including lower modulus of elasticity, higher creep coefficient, higher shrinkage strain, longer bond transfer and development lengths of strands, flexural and shear strengths, etc.[25]

J. **Shotcrete** – Shotcrete could be used as specified in WSDOT Standard Plans. Shotcrete may not be suitable for some critical applications unless approved by the Engineer of Record.

Substitution of CIP conventional concrete in the contract document with shotcrete needs the approval of the Engineer of Record.

Some of the shortfalls of shotcrete as compared to conventional CIP concrete include:

- **Durability** – Conventional concrete is placed in forms and vibrated for consolidation. Shotcrete, whether placed by wet or dry material feed, is pneumatically applied to the surface and is not consolidated as conventional concrete. Due to the difference in consolidation, permeability can be affected. If the permeability is not low enough, the service life of the shotcrete will be affected and may not meet the minimum of 75 years specified for conventional concretes.

  Observation of some projects indicates the inadequate performance of shotcrete to properly hold back water. This results in leaking and potential freezing, seemingly at a higher rate than conventional concrete. Due to the method of placement of shotcrete, air entrainment is difficult to control. This leads to less resistance of freeze/thaw cycles.
- **Cracking** – There is more cracking observed in shotcrete surfaces compared to conventional concrete. Excessive cracking in shotcrete could be attributed to its higher shrinkage, method of curing, and lesser resistance to freeze/thaw cycles. The shotcrete cracking is more evident when structure is subjected to differential shrinkage.
- **Corrosion Protection** – The higher permeability of shotcrete places the steel reinforcement (whether mesh or bars) at a higher risk of corrosion than conventional concrete applications. Consideration for corrosion protection may be necessary for some critical shotcrete applications.
- **Safety** – Carved shotcrete and shotcrete that needs a high degree of relief to accent architectural features lead to areas of 4″-6″ of unreinforced shotcrete. These areas can be prone to an accelerated rate of deterioration. This, in turn, places pedestrians, bicyclists, and traffic next to the wall at risk of falling debris.
- **Visual Quality and Corridor Continuity** – As shotcrete is finished by hand, standard architectural design, as defined in the WSDOT *Design Manual* M 22-01, typically cannot be met. This can create conflicts with the architectural guidelines developed for the corridor. Many times the guidelines are developed with public input. If the guidelines are not met, the public develops a distrust of the process. In other cases, the use of faux rock finishes, more commonly used by the private sector, can create the perception of the misuse of public funds.

K. **Lightweight Aggregate Concrete** – Lightweight aggregate concrete may be used for precast and CIP members upon approval of the WSDOT Bridge Design Engineer.

5.1.2 Reinforcing Steel

A. **Grades** – Steel reinforcing bars are manufactured as plain or deformed bars (which have ribbed projections that grip the concrete in order to provide better bond between steel and concrete). In Washington State, the reinforcing bars are always deformed.

Reinforcing bars conform to Section 9-07.2 of the *Standard Specifications*.

B. **Sizes** – Reinforcing bars are referred to in the contract plans and specifications by number and vary in size from #3 to #18. For bars up to and including #8, the number of the bar coincides with the bar diameter in eighths of an inch. The #9, #10, and #11 bars have diameters that provide areas equal to 1″ × 1″ square bars, 1⅛″ × 1⅛″ square bars and 1¼″ × 1¼″ square bars respectively. Similarly, the #14 and #18 bars correspond to 1½″ × 1½″ and 2″ × 2″ square bars, respectively. Appendix 5.1-A3 shows the sizes, number, and various properties of the types of bars used in Washington State.

C. **Development** –

1. **Tension Development Length** – Development length or anchorage of reinforcement is required on both sides of a point of maximum stress at any section of a reinforced concrete member. Development of reinforcement in tension shall be per AASHTO LRFD 5.11.2.1.

   Appendix 5.1-A4 shows the tension development length for both uncoated and epoxy coated Grade 60 bars for normal weight concrete with specified strengths of 3,000 to 6,000 psi.

2. **Compression Development Length** – Development of reinforcement in compression shall be per AASHTO LRFD 5.11.2.2. The basic development lengths for deformed bars in compression are shown in Appendix 5.1-A5. These values may be modified as described in AASHTO. However, the minimum development length shall be 1′-0″.

3. **Tension Development Length of Standard Hooks** – Standard hooks are used to develop bars in tension where space limitations restrict the use of straight bars. Tension development length of 90° & 180° standard hooks are shown in Appendix 5.1-A6.

D. **Splices** – Three methods are used to splice reinforcing bars: lap splices, mechanical splices, and welded splices. The Contract Plans shall clearly show the locations and lengths of splices. Splices shall be per AASHTO LRFD 5.11.5.

Lap splicing of reinforcing bars is the most common method. No lap splices, for either tension or compression bars, shall be less than 2′-0″.

1. **Tension Lap Splices** – Many of the same factors which affect development length affect splices. Consequently, tension lap splices are a function of the bar's development length, l_d. There are three classes of tension lap splices: Class A, B, and C. Designers are encouraged to splice bars at points of minimum stress and to stagger lap splices along the length of the bars.

   Appendix 5.1-A7 shows tension lap splices for both uncoated and epoxy coated Grade 60 bars for normal weight concrete with specified strengths of 3,000 to 6,000 psi.

2. **Compression Lap Splices** – The compression lap splices shown in Appendix 5.1-A5 are for concrete strengths greater than 3,000 psi. If the concrete strength is less than 3,000 psi, the compression lap splices shall be increased by one third. Note that when two bars of different diameters are lap spliced, the length of the lap splice shall be the larger of the lap splice for the smaller bar or the development length of the larger bar.

3. **Mechanical Splices** – Mechanical splices are proprietary splicing mechanisms. The requirements for mechanical splices are found in AASHTO LRFD 5.5.3.4 and 5.11.5.2.2.

4. **Welded Splices** – ASHTO LRFD 5.11.5.2.3 describes the requirements for welded splices. On modifications to existing structures, welding of reinforcing bars may not be possible because of the non-weldability of some steels.

E. **Hooks and Bends** – For hook and bend requirements, see AASHTO LRFD 5.10.2. Standard hooks and bend radii are shown in Appendix 5.1-A1.

F. **Fabrication Lengths** – Reinforcing bars are available in standard mill lengths of 40′ for bar sizes #3 and #4 and 60′ for bar sizes of #5 and greater. Designers shall limit reinforcing bar lengths to the standard mill lengths. Because of placement considerations, designers should consider limiting the overall lengths of bar size #3 to 30′ and bar size #5 to 40′.

Spirals of bar sizes #4 through #6 are available on 5,000 lb coils. Spirals should be limited to a maximum bar size of #6.

G. **Placement** – Placement of reinforcing bars can be a problem during construction. Sometimes it may be necessary to make a large scale drawing of reinforcement to look for interference and placement problems in confined areas. If interference is expected, additional details are required in the contract plans showing how to handle the interference and placement problems. Appendix 5.1-A2 shows the minimum clearance and spacing of reinforcement for beams and columns.

H. **Member Reinforcement Requirements** – There are several AASHTO LRFD specification requirements to ensure that minimum reinforcement is provided in reinforced concrete members.

1. **Flexure** – The minimum reinforcement requirements of AASHTO LRFD 5.7.3.3.2 are replaced with the following:

Unless otherwise specified, at any section of a tension-controlled flexural component, the amount of prestressed and nonprestressed tensile reinforcement shall be adequate to develop a factored flexural resistance at least equal to the lesser of:

- Factored cracking moment, $M_{cr\text{-}mod}$, determined on the basis of elastic distribution and modulus of rupture.

$$M_{cr\text{-}mod} = \gamma_3\left[(\gamma_1 f_r + \gamma_2 f_{cpe})S_c - M_{dnc}\left(\frac{S_c}{S_{nc}} - 1\right)\right]$$

Where:

f_r = modulus of rupture of concrete specified in LRFD Article 5.4.2.6 (ksi).

f_{cpe} = compressive stress in concrete due to effective prestress forces only (after allowance for all prestress losses) at extreme fiber of section where tensile stress is caused by externally applied loads (ksi)

M_{dnc} = total unfactored dead load moment acting on the monolithic or noncomposite section (kip-in)

S_c = section modulus for the extreme fiber of the composite section where tensile stress is caused by externally applied loads (in^3)

S_{nc} = section modulus for the extreme fiber of the monolithic or noncomposite section where tensile stress is caused by externally applied loads (in^3)

The following factors account for variability in the flexural cracking strength of concrete, variability of prestress and the ratio of nominal yield stress of reinforcement to ultimate.

γ_1 = 1.56, which can be reduced to 1.2 for precast segmental structures.

γ_2 = 1.1

γ_3 = the ratio of yield stress to ultimate stress of the reinforcement (0.67 for A615 Grade 60, and 0.75 for A706 Grade 60 reinforcement). For prestressed concrete structures, use 1.0.

Appropriate values for M_{dnc} and S_{nc} shall be used for any intermediate composite sections. Where the beams are designed for the monolithic or noncomposite section to resist all loads, substitute S_{nc} for S_c in the above equation for the calculation of $M_{cr\text{-}mod}$.

- 1.33 times the factored moment required by the applicable strength load combinations specified in LRFD Table 3.4.1-1.

2. **Compression** – For compression members, the area of longitudinal reinforcement shall meet the requirements of AASHTO LRFD 5.7.4.2 and AASHTO Guide Specifications for LRFD Seismic Bridge Design 8.8. Additional lateral reinforcement requirements are given in AASHTO LRFD 5.7.4 and the AASHTO Guide Specifications for LRFD Seismic Bridge Design.

I. **Joint and Corner Details** –

1. **T-Joint** – The forces form a tension crack at 45° in the joint. Reinforcement as shown in Figure 5.1.2-1 is more than twice as effective in developing the strength of the corner than if the reinforcement was turned 180°.

2. **"Normal" Right Corners** – Corners subjected to bending as shown in Figure 5.1.2-2 will crack radially in the corner outside of the main reinforcing steel. Smaller size reinforcing steel shall be provided in the corner to distribute the radial cracking.

3. **Right or Obtuse Angle Corners** – Corners subjected to bending as shown in Figure 5.1.2-3 tend to crack at the reentrant corner and fail in tension across the corner. If not properly reinforced, the resisting corner moment may be less than the applied moment.

   Reinforced as shown in Figure 5.1.2-3, but without the diagonal reinforcing steel across the corner, the section will develop 85% of the ultimate moment capacity of the wall. If the bends were rotated 180°, only 30% of the wall capacity would be developed.

   Adding diagonal reinforcing steel across the corner, approximately equal to 50% of the main reinforcing steel, will develop the corner strength to fully resist the applied moment. Extend the diagonal reinforcement past the corner each direction for anchorage. Since this bar arrangement will fully develop the resisting moment, a fillet in the corner is normally unnecessary.

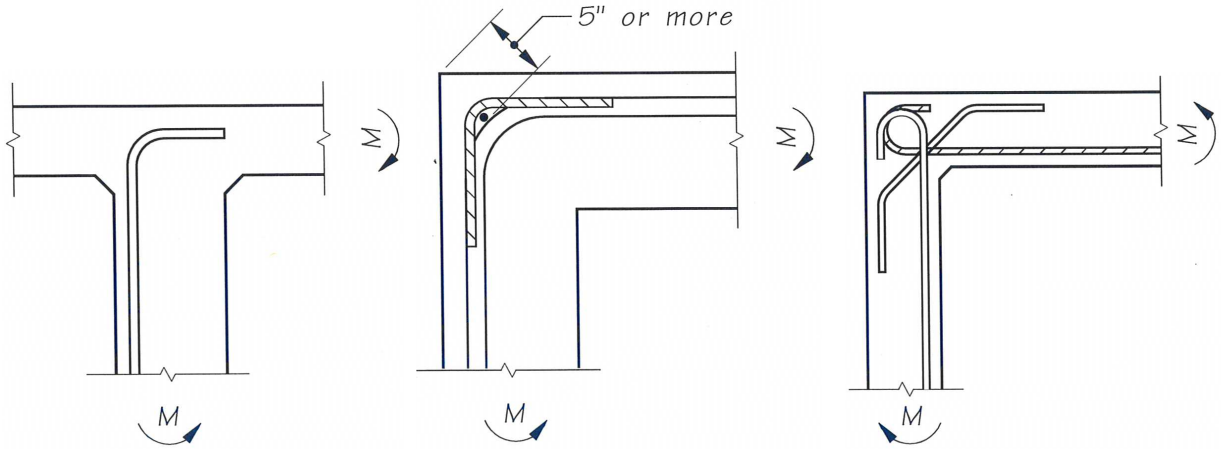

T-Joint Reinforcing Details
Figure 5.1.2-1

"Normal" Right Corner Reinforcing Details
Figure 5.1.2-2

Right or Obtuse Angle Corner Reinforcing Details
Figure 5.1.2-3

J. **Welded Wire Reinforcement in Precast Prestressed Girders** – Welded wire reinforcement can be used to replace mild steel reinforcement in precast prestressed girders. Welded wire reinforcement shall meet all AASHTO requirements (see AASHTO LRFD 5.4.3, 5.8.2.6, 5.8.2.8, C.5.8.2.8, 5.10.6.3, 5.10.7, 5.10.8, 5.11.2.6.3, etc.).

The yield strength shall be greater than or equal to 60 ksi. The design yield strength shall be 60 ksi. Welded wire reinforcement shall be deformed. Welded wire reinforcement shall have the same area and spacing as the mild steel reinforcement that it replaces.

Shear stirrup longitudinal wires (tack welds) shall be excluded from the web of the girder and are limited to the flange areas as described in AASHTO LRFD 5.8.2.8. Longitudinal wires for anchorage of welded wire reinforcement shall have an area of 40% or more of the area of the wire being anchored as described in ASTM A497 but shall not be less than D4.

5.1.3 Prestressing Steel

A. **General** – Three types of high-tensile steel used for prestressing steel are:

1. **Strands** – AASHTO M 203 Grade 270, low relaxation or stress relieved
2. **Bars** – AASHTO M 275 Type II
3. **Parallel Wires** – AASHTO M 204 Type WA

All WSDOT designs are based on low relaxation strands using either 0.5″ or 0.6″ diameter strands for girders, and ⅜″ or 7⁄16″ diameter strands for stay-in-place precast deck panels. Properties of uncoated and epoxy-coated prestressing stands are shown in Appendix 5.1-A8. 0.62″ and 0.7″ diameter strands may be used for top temporary strands in precast girders.

B. **Allowable Stresses** – Allowable stresses for prestressing steel are as listed in AASHTO LRFD 5.9.3.

C. **Prestressing Strands** – Standard strand patterns for all types of WSDOT prestressed girders are shown throughout Appendix 5.6-A and Appendix 5.9-A.

1. **Straight Strands** – The position of the straight strands in the bottom flange is standardized for each girder type.
2. **Harped Strands** – The harped strands are bundled between the harping points (the 0.4 and 0.6 points of the girder length). The girder fabricator shall select a bundle configuration that meets plan centroid requirements.

   There are practical limitations to how close the centroid of harped strands can be to the bottom of a girder. The minimum design value for this shall be determined using the following guide: Up to 12 harped strands are placed in a single bundle with the centroid 4″ above the bottom of the girder. Additional strands are placed in twelve-strand bundles with centroids at 2″ spacing vertically upwards.

   At the girder ends, the strands are splayed to a normal pattern. The centroid of strands at both the girder end and the harping point may be varied to suit girder stress requirements.

   The slope of any individual harped strands shall not be steeper than 8 horizontal to 1 vertical for 0.6″ diameter strands, and 6 horizontal to 1 vertical for 0.5″ diameter strands.

   The harped strand exit location at the girder ends shall be held as low as possible while maintaining the concrete stresses within allowable limits.
3. **Temporary Strands** – Temporary strands in the top flanges of girders may be required for shipping (see Section 5.6.3). These strands may be pretensioned and bonded only for the end 10 feet of the girder, or may be post-tensioned prior to lifting the girder from the form. These strands can be considered in design to reduce the required transfer strength, to provide stability during shipping, and to reduce the “A” dimension. These strands must be cut before the CIP intermediate diaphragms are placed.

D. **Development of Prestressing Strand** –

1. **General** – Development of prestressing strand shall be as described in AASHTO LRFD 5.11.4.

   The development length of bonded uncoated & coated prestressing strands are shown in Appendix 5.1-A8.

2. **Partially Debonded Strands** – Where it is necessary to prevent a strand from actively supplying prestress force near the end of a girder, it shall be debonded. This can be accomplished by taping a close fitting PVC tube to the stressed strand from the end of the girder to some point where the strand can be allowed to develop its load. Since this is not a common procedure, it shall be carefully detailed on the plans. It is important when this method is used in construction that the taping of the tube is done in such a manner that concrete cannot leak into the tube and provide an undesirable bond of the strand.

   Partially debonded strands shall meet the requirements of AASHTO LRFD 5.11.4.3.

3. **Strand Development Outside of Girder** – Extended bottom prestress strands are used to connect the ends of girders with diaphragms and resist loads from creep effects, shrinkage effects, and positive moments.

   Extended strands must be developed in the short distance within the diaphragm (between two girder ends at intermediate piers). This is normally accomplished by requiring strand chucks and anchors as shown in Figure 5.1.3-1. Strand anchors are normally installed at 1′-9″ from the girder ends. The number of extended strands shall not exceed one-half of the total number of straight strands in the girder and shall not be less than four.

   The designer shall calculate the number of extended straight strands needed to develop the required capacity at the end of the girder.

   For fixed intermediate piers at the Extreme Event I limit state, the total number of extended strands for each girder end shall not be less than:

$$N_{ps} = 12[M_{sei} \cdot K - M_{SIDL}] \cdot \frac{1}{0.9\phi A_{ps} f_{py} d} \qquad (5.1.3\text{-}1)$$

Where:

M_{sei} = Moment due to overstrength plastic moment capacity of the column and associated overstrength plastic shear, either within or outside the effective width, per girder, kip-ft

M_{SIDL} = Moment due to superimposed dead loads (traffic barrier, sidewalk, etc.) per girder, kip-ft

K = Span moment distribution factor as shown in Figure 5.1.3-2 (use maximum of K1 and K2)

A_{ps} = Area of each extended strand, in^2

f_{py} = Yield strength of prestressing steel specified in AASHTO LRFD Table 5.4.4.1-1, ksi

d = Distance from top of deck slab to c.g. of extended strands, in

φ = Flexural resistance factor, 1.0

The plastic hinging moment at the c.g. of the superstructure is calculated using the following:

$$M_{po}^{CG} = M_{po}^{top} + \frac{\left(M_{po}^{top} + M_{po}^{base}\right)}{L_c} h \qquad (5.1.3\text{-}2)$$

Where:

M_{po}^{top} = Plastic overstrength moment at top of column, kip-ft

M_{po}^{base} = Plastic overstrength moment at base of column, kip-ft

h = Distance from top of column to c.g. of superstructure, ft

L_c = Column clear height used to determine overstrength shear associated with the overstrength moments, ft

For precast, prestressed girders with cast-in-place deck slabs, two-thirds of the plastic hinging moment at the c.g. of the superstructure shall be resisted by girders within the effective width. The remaining one-third shall be resisted by girders outside the effective width. The plastic hinging moment per girder is calculated using the following:

$$M_{sei}^{Int} = \frac{2M_{po}^{CG}}{3N_g^{int}} \text{ For girders within the effective width} \quad (5.1.3\text{-}3)$$

$$M_{sei}^{Ext} = \frac{M_{po}^{CG}}{3N_g^{ext}} \text{ For girders outside the effective width} \quad (5.1.3\text{-}4)$$

$$\text{If } M_{sei}^{Int} \geq M_{sei}^{Ext} \text{ then } M_{sei} = M_{sei}^{Int} \quad (5.1.3\text{-}5)$$

$$\text{If } M_{sei}^{Int} < M_{sei}^{Ext} \text{ then } M_{sei} = \frac{M_{po}^{CG}}{N_g^{int}+N_g^{ext}} \quad (5.1.3\text{-}6)$$

Where:

N_g^{int} = Number of girders encompassed by the effective width
N_g^{ext} = Number of girders outside the effective width

The effective width for the extended strand calculation shall be taken as:

$$B_{eff} = D_c + D_s \quad (5.1.3\text{-}7)$$

Where:

D_c = Diameter or width of column, see Figure 5.1.3-3
D_s = Depth of superstructure from top of column to top of deck slab, see Figure 5.1.3-3

See Appendix 5-B10 for a design example.

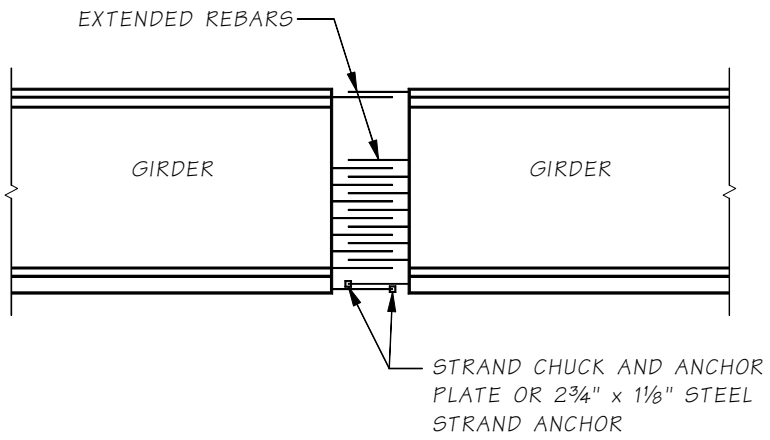

Strand Development
Figure 5.1.3-1

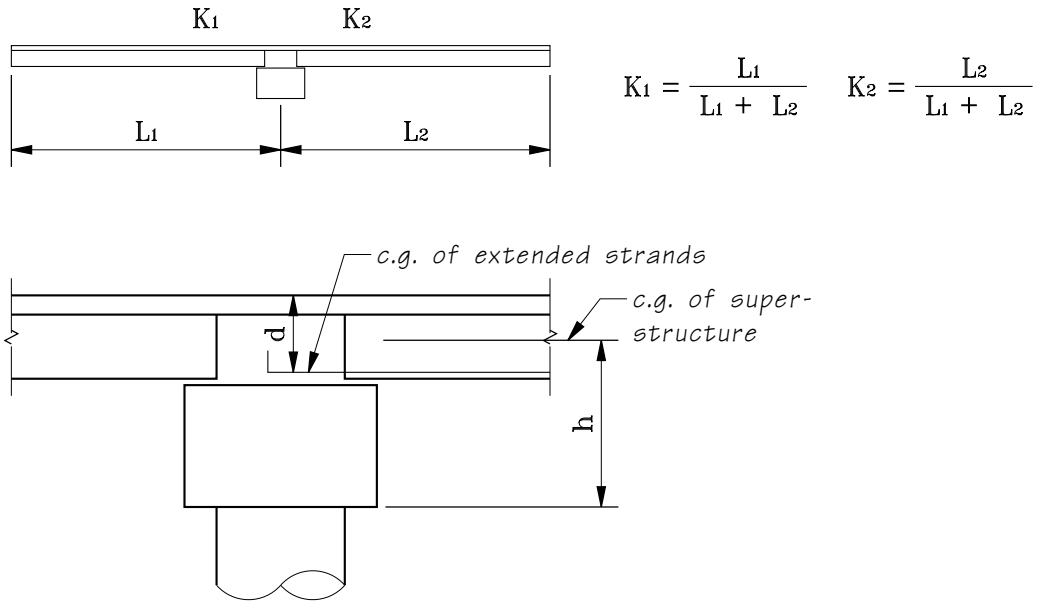

Extended Strand Design
Figure 5.1.3-2

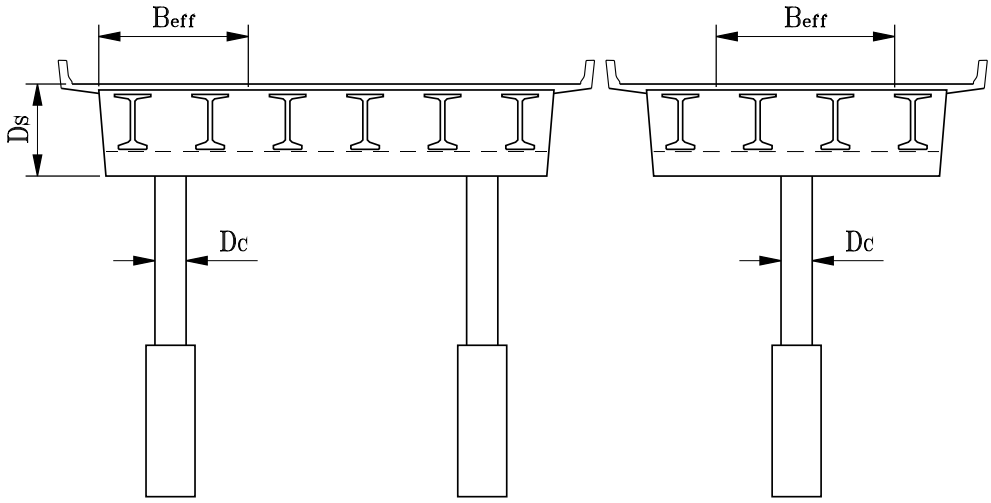

Effective Superstructure Width for Extended Strand Design
Figure 5.1.3-3

5.1.4 Prestress Losses

AASHTO LRFD Specifications outline the method of predicting prestress losses for usual prestressed concrete bridges that shall be used in design except as noted below.

A. **Instantaneous Losses**

1. **Elastic Shortening of Concrete** – Transfer of prestress forces into the girder ends results in an instantaneous elastic loss. The prestress loss due to elastic shortening shall be added to the time dependent losses to determine the total losses. The loss due to elastic shortening shall be taken as per AASHTO LRFD 5.9.5.2.3.

   For pretensioned member and low-relaxation strands, f_{cgp} may be calculated based on $0.7f_{pu}$. For post-tensioned members with bonded tendons, f_{cgp} may be calculated based on prestressing force after jacking at the section of maximum moment.

2. **Anchorage Set Loss** – The anchor set loss shall be based on ⅜″ slippage for design purposes. Anchor set loss and the length affected by anchor set loss is shown in Figure 5.1.4-1.

$$x = \sqrt{\frac{\Delta_{set} A_{PT} E_p L}{P_{j\text{-}left} - P_{j\text{-}right}}} \qquad (5.1.4\text{-}1)$$

$$\Delta f_{pA} = \frac{2x\left(P_{j\text{-}left} - P_{j\text{-}right}\right)}{A_{PT} L} \qquad (5.1.4\text{-}2)$$

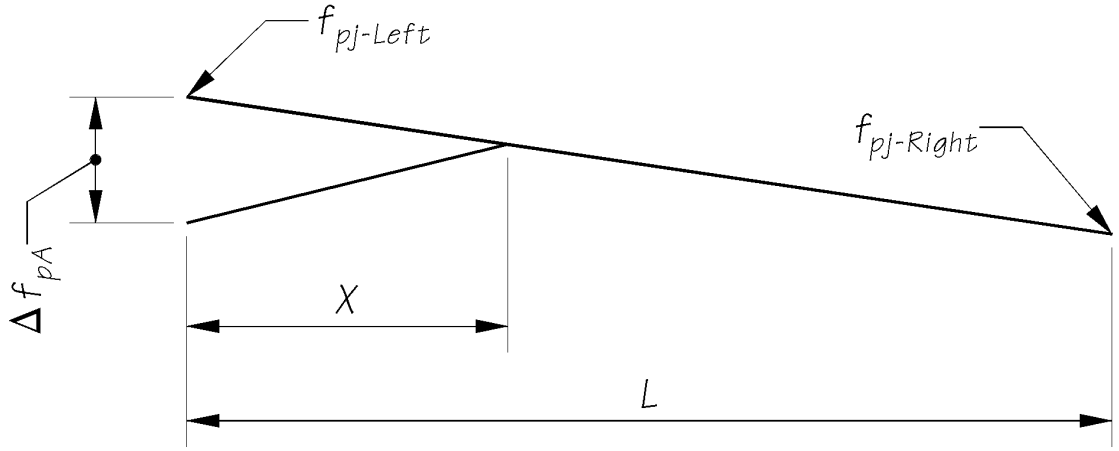

Anchorage Set Loss
Figure 5.1.4-1

3. **Friction Losses** – Friction losses occurring during jacking and prior to anchoring depend on the system and materials used. For a rigid spiral galvanized ferrous metal duct system, μ shall be 0.20 and $K = 0.0002$. For plastic ducts, the designer shall use the values shown in AASHTO LRFD Table 5.9.5.2.2b.

   To avoid the substantial friction loss caused by sharp tendon curvature in the end regions where the tendons flare out from a stacked arrangement towards the bearing plates, use 0.10 times the span length or 20 feet as the minimum flare zone length. The recommended minimum radius (horizontal or vertical) of flared tendons is 200 feet. In the special cases where sharp curvature cannot be avoided, extra horizontal and vertical ties shall be added along the concave side of the curve to resist the tendency to break through the web.

$$\Delta f_{pF} = f_{pj}\left(1 - e^{-(kx + \mu\alpha)}\right) \qquad (5.1.4\text{-}3)$$

When summing the α angles for total friction loss along the structure, horizontal curvature of the tendons as well as horizontal and vertical roadway curvature shall be included in the summation. The α angles for horizontally and vertically curved tendons are shown in Figure 5.1.4-2.

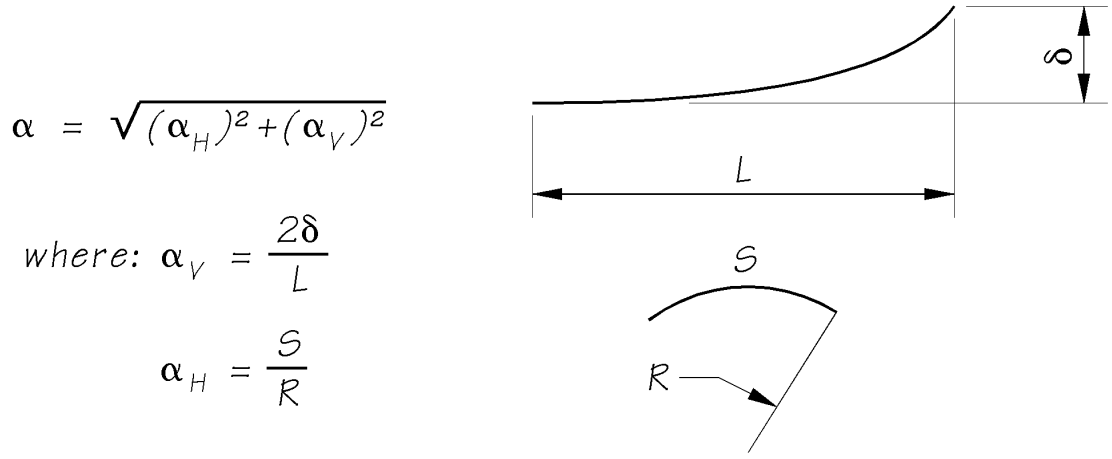

The α Angles for Curved PT Tendons
Figure 5.1.4-2

B. **Approximate Estimate of Time-Dependent Losses** – The Approximate Estimate of Time-Dependent Losses of AASHTO LRFD 5.9.5.3 may be used for precast, prestressed girders with composite decks as long as the conditions set forth in AASHTO are satisfied.

For members of unusual dimensions, level of prestressing, construction staging, or concrete constituent materials and for post-tensioned members, the Refined Estimates of AASHTO LRFD 5.9.5.4 shall be used.

C. **Refined Estimates of Time-Dependent Losses** – The Refined Estimate of Time-Dependent Losses of AASHTO LRFD 5.9.5.4 is the standard practice for prestress loss calculations.

D. **Total Prestress Loss** – For standard precast, pretensioned members with CIP deck subject to normal loading and environmental conditions and pretensioned with low relaxation strands, the total prestress loss may be estimated as:

$$\Delta f_{pT} = \Delta f_{pRO} + \Delta f_{pES} + \Delta f_{pED} + \Delta f_{pLT} \qquad (5.1.4\text{-}4)$$

The first term relates to initial relaxation that occurs between the time of strand stressing and prestress transfer.

$$\Delta f_{pRO} = \frac{log(24t)}{40}\left(\frac{f_{pj}}{f_{py}} - 0.55\right) f_{pj} \qquad (5.1.4\text{-}5)$$

Where:

t = Duration of time between strand stressing and prestress transfer, typically 1 day.
f_{pj} = Jacking stress
f_{py} = Yield strength of the strand

The second term, Δf_{pES}, accounts for elastic shortening and is in accordance with AASHTO LRFD 5.9.5.2.3a.

The elastic gain due to deck placement and superimposed dead loads is taken to be:

$$\Delta f_{pED} = \frac{E_p}{E_c}\left[-\frac{(M_{slab} + M_{diaphragms})e_{ps}}{I_g} - \frac{M_{sidl}(Y_{bc} - Y_{bg} + e_{ps})}{I_c}\right] \quad (5.1.4\text{-}6)$$

Where:

E_p = Modulus of elasticity of the prestressing strand
E_c = Modulus of elasticity of the concrete at the time of loading
M_{slab} = Moment caused by deck slab placement
$M_{diaphragms}$ = Moment caused by diaphragms and other external loads applied to the non-composite girder section
M_{sidl} = Moment caused by all superimposed dead loads including traffic barriers and overlays
e_{ps} = Eccentricity of the prestressing strand
I_g = Moment of inertia of the non-composite girder
I_c = Moment of inertia of the composite girder
Y_{bg} = Location of the centroid of the non-composite girder measured from the bottom of the girder
Y_{bc} = Location of the centroid of the composite girder measured from the bottom of the girder

Long term time dependent losses, Δf_{pLT}, are computed in accordance with the refined estimates of AASHTO LRFD 5.9.5.4 or a detailed time-step method.

E. **Temporary Losses** – For checking stresses during release, lifting, transportation, and erection of prestressed girders, the elastic and time-dependent losses may be computed based on the following assumptions.

1. **Lifting of Girders From Casting Beds** – For normal construction, forms are stripped and girders are lifted from the casting bed within one day.

2. **Transportation** – Girders are most difficult to transport at a young age. The hauling configuration causes reduced dead load moments in the girder and the potential for overstress between the harping points. Overstress may also occur at the support points depending on the prestressing and the trucking configuration. This is compounded by the magnitude of the prestress force not having been reduced by losses. For an aggressive construction schedule girders are typically transported to the job site around day 10.

   When losses are estimated by the Approximate Estimate of AASHTO LRFD 5.9.5.3, the losses at the time of hauling may be estimated by:

$$\Delta f_{pTH} = \Delta f_{pRO} + \Delta f_{pES} + \Delta f_{pH} \quad (5.1.4\text{-}7)$$

   Where:

Δf_{pTH} = total loss at hauling
Δf_{pH} = time dependent loss at time of hauling = $3\frac{f_{pi}A_{ps}}{A_g}\gamma_h\gamma_{st} + 3\gamma_h\gamma_{st} + 0.6$

3. **Erection** – During construction the non-composite girders must carry the full weight of the deck slab and interior diaphragms. This loading typically occurs around 120 days for a normal construction schedule.

4. **Final Configuration** – The composite slab and girder section must carry all conceivable loads including superimposed dead loads such as traffic barriers, overlays, and live loads. It is assumed that superimposed dead loads are placed at 120 days and final losses occur at 2,000 days.

5.1.5 Prestressing Anchorage Systems

There are numerous prestressing systems. Most systems combine a method of prestressing the strands with a method of anchoring it to concrete.

WSDOT requires approval of all multi-strand and/or bar anchorages used in prestressed concrete bridges as described in *Standard Specifications* 6-02.3(26).

5.1.6 Post-tensioning Ducts

Post-tensioning ducts shall meet the requirements of *Standard Specification* 6-02.3(26)E.

Ducts for longitudinal post-tensioning tendons in precast spliced I-girders shall be made of rigid galvanized spiral ferrous metal to maintain standard girder concrete cover requirements.

The radius of curvature of tendon ducts shall not be less than 20 feet except in anchorage areas where 12 feet may be permitted.

5.2 Design Considerations

5.2.1 Service and Fatigue Limit States

A. **General –** Service limit state is used to satisfy allowable stresses, deflection, and control of cracking requirements. Design aids for tensile stress in reinforcement at the service limit state, f_{ss}, are provided in Appendices 5.2-A1, 5.2-A2, and 5.2-A3.

B. **Control of Cracking** – Reinforcement shall be provided and spaced to meet the requirements in AASHTO LRFD 5.7.3.4 "Control of Cracking by Distribution of Reinforcement." The exposure factor shall be based upon a Class 2 exposure condition.

C. **Allowable Stresses in Prestressed Members –** Under service limit state the tensile stresses in the precompressed tensile zone shall be limited to zero. This prevents cracking of the concrete during the service life of the structure and provides additional stress and strength capacity for overloads. Allowable concrete stresses for the service and fatigue limit states are shown in Table 5.2.1-1.

Condition	Stress	Location	Allowable Stress
Temporary Stress at Transfer and at Lifting from Casting Bed	Tensile	In areas other than the precompressed tensile zone and without bonded reinforcement	$0.0948\sqrt{f'_{ci}} \leq 0.2\ (ksi)$
		In areas with bonded reinforcement sufficient to resist tensile force in the concrete	$.19\sqrt{f'_{ci}}\ (ksi)$
	Compressive	All Locations	$0.65\ f'_{ci}$
Temporary Stress at Shipping and Erection	Tensile	In areas other than the precompressed tensile zone and without bonded reinforcement	$0.0948\sqrt{f'_c}\ (ksi)$
		In areas other than the precompressed tensile zone and with bonded reinforcement, plumb girder with impact	$0.19\sqrt{f'_c}\ (ksi)$
		In areas other than the precompressed tensile zone and with bonded reinforcement, inclined girder without impact	$0.24\sqrt{f'_c}\ (ksi)$
		In areas other than the precompressed tensile zone and with bonded reinforcement, after temporary top strand detensioning	$0.19\sqrt{f'_c}\ (ksi)$
	Compressive	All locations	$0.65\ f'_c$
Final Stresses at Service Load	Tensile	Precompressed tensile zone	0.0
	Compressive	Effective prestress and permanent loads	$0.45\ f'_c$
		Effective prestress, permanent loads and transient loads	$0.60\ f'_c$
Final Stresses at Fatigue Load	Compressive	Fatigue I Load Combination plus one-half effective prestress and permanent loads per AASHTO LRFD 5.5.3.1	$0.40\ f'_c$

Allowable Stresses in Prestressed Concrete Members
Table 5.2.1-1

5.2.2 Strength-Limit State

A. **Flexure** – Design for flexural force effects shall be per AASHTO LRFD 5.7.

For precast prestressed girders, the approximate methods of AASHTO LRFD 5.7.3 underestimate the flexural strength of the composite deck-girder system[2, 23]. Strain compatibility approaches such as the PCI Bridge Design Manual[3] method (PCI BDM Section 8.2.2.5) and the Nonlinear Strain Compatibility Analysis method in the PCI Journal[23] are recommended. In addition to the effective area of the deck, the top flange of the girder and the mild reinforcement in the deck and the top flange of the girder may be included in the analysis.

The typical section for computation of precast, prestressed girder composite section properties is shown in Figure 5.6.2-1.

1. **Resistance Factors** – The resistance factors for tension-controlled sections are given in Table 5.2.2-1.

Resistance Factors		Precast Members	CIP Members
Conventional Construction (other than segmentally constructed bridges)	Mild Reinforcement	1.0	0.9
	Prestressed	1.0	0.9
	Spliced Girders	0.95	

Flexural Resistance Factor for Tension-Controlled Concrete Members
Table 5.2.2-1

For tension-controlled partially prestressed members, the resistance factor shall be taken as 0.9.

For members in the transition zone between tension-controlled and compression-controlled sections, the resistance factor shall be taken as follows:

For precast members:

$$0.75 \le \varphi = 0.583 + 0.25\left(\frac{d_t}{c} - 1\right) \le 1.0 \qquad (5.2.2\text{-}1)$$

For CIP members:

$$0.75 \le \varphi = 0.650 + 0.15\left(\frac{d_t}{c} - 1\right) \le 0.9 \qquad (5.2.2\text{-}2)$$

For precast spliced girders with CIP closures:

$$0.75 \le \varphi = 0.616 + 0.20\left(\frac{d_t}{c} - 1\right) \le 0.95 \qquad (5.2.2\text{-}3)$$

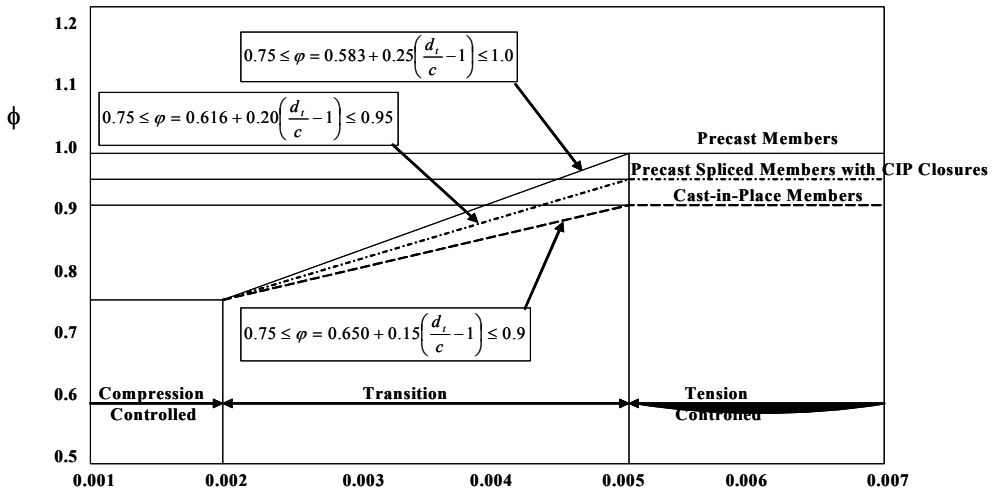

Variation of φ with Net Tensile Strain ε_t
Figure 5.2.2-1

2. **Flexural Design of Nonprestressed Singly-Reinforced Rectangular Beams** – For design purposes, the area of reinforcement for a nonprestressed singly-reinforced rectangular beam or slab can be determined by letting:

$$M_u = \phi M_n = \phi A_s f_y \left(d - \frac{a}{2}\right) \quad (5.2.2\text{-}4)$$

However, if:

$$a = \frac{A_s f_y}{0.85 f_c' b} \quad (5.2.2\text{-}5)$$

Equation (5) can be substituted into equation (4) and solved for A_s:

$$A_s = \left(\frac{0.85 f_c' b}{f_y}\right)\left[d - \sqrt{d^2 - \frac{2M_u}{0.85 f_c' b \phi}}\right] \quad (5.2.2\text{-}6)$$

Where:

A_s = Area of tension reinforcement (in^2)
M_u = Factored moment (kip-in)
f'_c = Specified compressive strength of concrete (ksi)
f_y = Specified minimum yield strength of tension reinforcement (ksi)
b = Width of the compression face (in)
d = Distance from compression face to centroid of tension reinf. (in)
Φ = 0.9

The resistance factor should be assumed to be 0.9 for a tension-controlled section for the initial determination of A_s. This assumption must then be verified by checking that the tensile strain in the extreme tension steel is equal to or greater than 0.005. This will also assure that the tension reinforcement has yielded as assumed.

$$\epsilon_t = 0.003\left(\frac{d_t - c}{c}\right) \geq 0.005 \quad (5.2.2\text{-}7)$$

Where:

ϵ_t = Tensile strain in the extreme tension steel

d_t = Distance from extreme compression fiber to centroid of extreme tension reinforcement (in)

$c = \frac{A_s f_y}{0.85 f_c' b \beta_1}$

β_1 = From AASHTO LRFD 5.7.2.2

B. **Shear** – AASHTO LRFD 5.8 addresses shear design of concrete members.

1. The shear design of prestressed members shall be based on the general procedure of AASHTO LRFD 5.8.3.4.2.
2. The shear design of all non-prestressed members shall be based on either the general procedure, or the simplified procedure of AASHTO LRFD 5.8.3.4.1.
3. The strut-and-tie model shall be employed as required by AASHTO LRFD 5.8.1.1 & 2 for regions adjacent to abrupt changes in cross-section, openings, draped ends, deep beams, corbels, integral bent caps, c-bent caps, outrigger bents, deep footings, pile caps, etc.
4. AASHTO LRFD 5.8.3.4.3 "Simplified Procedure for Prestressed and Nonprestressed Sections" shall not be used.
5. The maximum spacing of transverse reinforcement is limited to 18 inches.

For prestressed girders, shear for the critical section at d_v from the internal face of the support and at the harping point are of particular interest.

C. **Interface Shear** – Interface shear transfer (shear friction) design is to be performed in accordance with AASHTO LRFD 5.8.4.

If a roughened surface is required for shear transfer at construction joints in new construction, they shall be identified in the plans. See Standard Specification Section 6-02.3(12)A.

When designing for shear transfer between new and existing concrete, the designer shall consider the high construction cost associated with roughening existing concrete surfaces. Whenever practical, the design for placing new concrete against existing concrete shall be completed such that roughening of the existing concrete surfaces is not required (i.e. use cohesion and friction factors for a surface that is not intentionally roughened).

When the additional capacity provided by a roughened surface is required, the surface roughening shall meet the requirements specified in AASHTO LRFD 5.8.4.3 (i.e. uniform ¼″ minimum amplitude). See *Standard Specification* Section 6-02.3(12)B and applicable WSDOT special provisions for concrete removal for reference.

The spall pattern roughening detail shown in Figure 5.2.2-2 may be included on plans as an alternative to the default uniform ¼″ amplitude roughening.

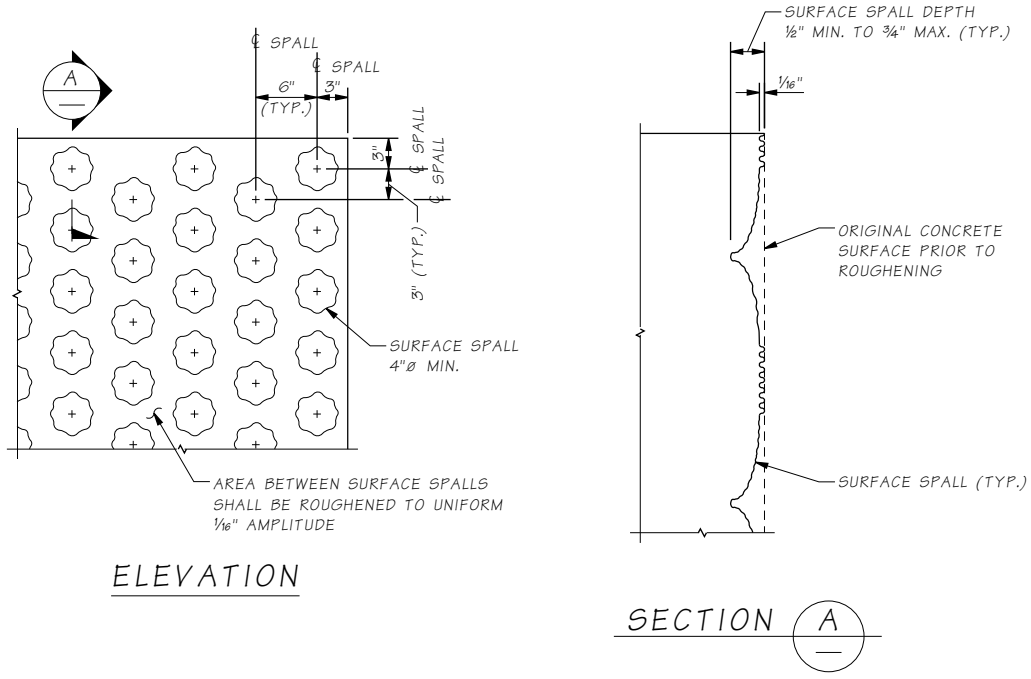

Spall Pattern Roughening Detail
Figure 5.2.2-2

Interface shear in prestressed girder design is critical at the interface connection between deck slab and girder, and at the end connection of the girder to a diaphragm or crossbeam. Shear in these areas is resisted by roughened or saw-tooth shear keyed concrete as well as reinforcement extending from the girder.

1. **Interface Shear Between Deck Slab and Girder** – The top surfaces of girders with cast-in-place decks shall be roughened as described in Standard Specification 6-02.3(25)H. The interface shear is resisted by the girder stirrups which extend up into the deck slab as well as the roughened top surface of the girder top flange.

   It is conservative to compute the interface shear force using the full factored loading applied to the composite deck slab and girder. However, the interface shear force need only be computed from factored loads applied to the composite section after the deck slab is placed such as superimposed dead loads and live loads.

   For SIP deck systems, only the roughened top flange surface between SIP panel supports (and the portion of the permanent net compressive force P_c on that section) is considered engaged in interface shear transfer.

2. **Interface Shear Friction at Girder End** – A prestressed girder may be required to carry shears at the end surface of the girder.

   An end condition at an intermediate pier crossbeam is shown in Figure 5.2.2-5. The shear which must be carried along the interface A-A is the actual factored shear acting on the section. The portion of the girder end that is roughened with saw-toothed shear keys shown on the standard girder plans may be considered as a "surface intentionally roughened to an amplitude of 0.25 inches". Shear resistance must be developed using interface shear theory assuming the longitudinal bars and the extended strands are actively participating. The main longitudinal deck slab reinforcement is already fully stressed by negative bending moments and thus cannot be considered for shear requirements. All bars, including the extended strands, must be properly anchored in order to be considered effective. This anchorage requirement must be clearly shown on the plans.

Similar requirements exist for connecting the end diaphragm at bridge ends where the diaphragm is cast on the girders (girder End Type A). In this case, however, loads consist only of the factored diaphragm dead load, approach slab dead load, and those wheel loads which can distribute to the interface. Longitudinal reinforcement provided at girder ends shall be identical in both ends of the girder for construction simplicity.

The program PGSuper does not check interface shear friction at girder ends. Standard girder plan details are adequate for girder End Types A and B. Standard girder plan details shall be checked for adequacy for girder End Types C and D.

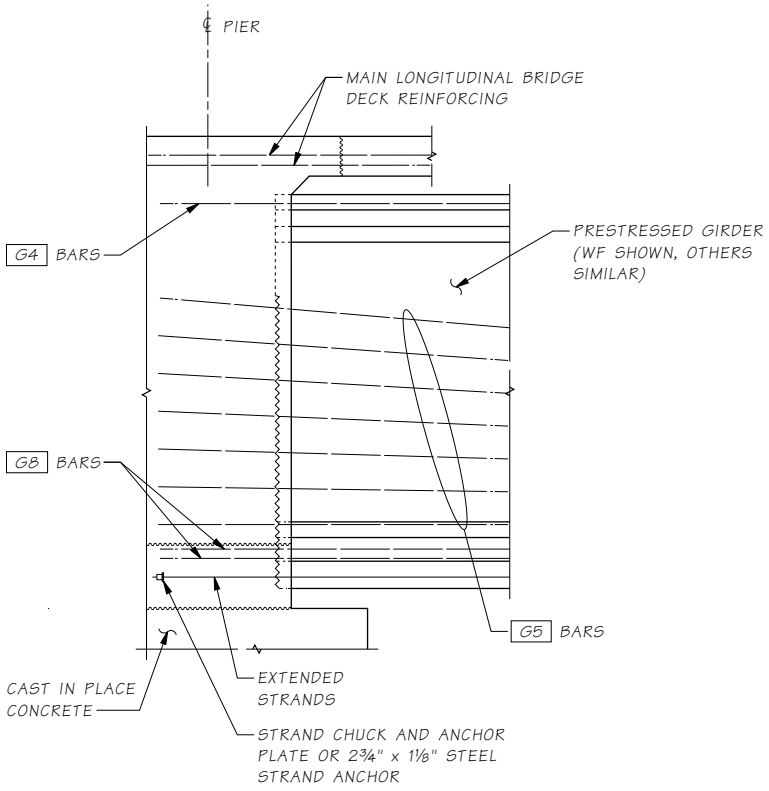

End Connection for Continuous Span Girder
Figure 5.2.2-3

D. **Shear and Torsion** – The design for shear and torsion is based on ACI 318-02 Building Code[4] Requirements for Structural Concrete and Commentary (318F-02) and is satisfactory for bridge members with dimensions similar to those normally used in buildings. AASHTO LRFD 5.8.3.6 may also be used for design.

According to Hsu[5], utilizing ACI 318-02 is awkward and overly conservative when applied to large-size hollow members. Collins and Mitchell[6] propose a rational design method for shear and torsion based on the compression field theory or strut-and-tie method for both prestressed and non-prestressed oncrete beams. These methods assume that diagonal compressive stresses can be transmitted through cracked concrete. Also, shear stresses are transmitted from one face of the crack to the other by a combination of aggregate interlock and dowel action of the stirrups.

For recommendations and design examples, the designer can refer to the paper by M.P. Collins and D. Mitchell, Shear and Torsion Design of Prestressed and Non-Prestressed Concrete Beams, PCI Journal, September-October 1980, pp. 32-100[6].

5.2.3 Strut-and-tie Model

Strut-and-tie models shall be used near regions of discontinuity or where beam theory is not applicable. Design and detailing considerations for strut-and-tie modeling is covered in AASHTO LRFD 5.6.3. See Appendix 5-B for a strut-and-tie design example for a pier cap.

5.2.4 Deflection and Camber

A. **General** – Flexural members are designed to have adequate stiffness to limit deflections or any deformations which may adversely affect the strength or serviceability of the structure at service load plus impact. The minimum superstructure depths are specified in AASHTO LRFD Table 2.5.2.6.3-1 and deflections shall be computed in accordance with AASHTO LRFD 5.7.3.6.2.

Accurate predictions of deflections are difficult to determine, since modulus of elasticity of concrete, E_c, varies with stress and age of concrete. Also, the effects of creep on deflections are difficult to estimate. For practical purposes, an accuracy of 10 to 20% is often sufficient. Prestressing can be used advantageously to control deflections; however, there are cases where excessive camber due to prestress has caused problems.

B. **Preliminary Estimate for Precast Prestressed Members** – For preliminary design, the long term deflection and camber of precast prestressed members may be estimated using the procedure given in the PCI Design Handbook[10] 4.8.4.

C. **Deflection Calculation for Precast Prestressed Girders –** The "*D*" dimension is the computed girder deflection at midspan (positive upward) immediately prior to deck slab placement.

Standard Specification 6-02.3(25)K defines two levels of girder camber at the time the deck concrete is placed, denoted D @ 40 Days and D @ 120 Days. They shall be shown in the plans to provide the contractor with lower and upper bounds of camber that can be anticipated in the field.

PGSuper calculates estimated cambers at 40 days (D_{40}) and 120 days (D_{120}). Due to variations in observed camber, these estimated cambers are generally considered to be upper bounds at their respective times. This is based on measured girder cambers of prestressed precast concrete girders compared with the estimated cambers from PGSuper.

D @ 120 Days is the upper bound of expected camber range at a girder age of 120 days after the release of prestress and is primarily intended to mitigate interference between the top of the cambered girder and the placement of concrete deck reinforcement. It is also used to calculate the "A" dimension at the girder ends. The age of 120 days was chosen because data has shown that additional camber growth after this age is negligible. D @ 120 Days may be taken as D120, the estimated camber at 120 days reported by PGSuper.

D @ 40 Days is the lower bound of expected camber range at a girder age of 40 days (30 days after the earliest allowable girder shipping age of 10 days). To match the profile grade, girders with too little camber require an increased volume of haunch concrete along the girder length. For girders with large flange widths, such as the WF series, this can add up to significant quantities of additional concrete for a large deck placement. Thus, the lower bound of camber allows the contractor to assess the risk of increased concrete quantities and mitigates claims for additional material. D @ 40 Days may be taken as 50% of D_{40}, the estimated camber at 40 days reported by PGSuper.

Figure 5.2.4-1 shows a typical pattern of girder deflection with time at centerline span. Portions of this characteristic curve are described below. The subparagraph numbers correspond to circled numbers on the curve.

1. **Elastic Deflection Due to Release of Prestress** – The prestress force produces moments in the girder tending to bow the girder upward. Resisting these moments are girder section dead load moments. The result is a net upward deflection.
2. **Creep Deflection Before Cutting Temporary Strands** – The girder continues to deflect upward due to the effect of creep. This effect is computed using the equation stated in Section 5.1.1E.
3. **Deflection Due to Cutting of Temporary Strands** – Cutting of temporary strands results in an elastic upward deflection. The default time interval for creep calculations for release of top temporary strands is 90 days after the release of prestress during girder fabrication for D_{120} (10 days for D_{40}).
4. **Diaphragm Load Deflection** – The load of diaphragm is applied to the girder section resulting in an elastic downward deflection. The default time interval for creep calculations for placing diaphragms is 90 days after the release of prestress during girder fabrication for D_{120} (10 days for D_{40}).
5. **Creep Deflection After Casting Diaphragms** – The girder continues to deflect upward for any time delay between diaphragms and deck slab casting.
6. **Deck Slab Load Deflection** – The load of the deck slab is applied to the girder section resulting in an elastic downward deflection. The default time interval for creep calculations for placing the deck slab is 120 days after the release of prestress during girder fabrication for D_{120} (40 days for D_{40}).
7. **Superimposed Dead Load Deflection** – The load of the traffic barriers, sidewalk, overlay, etc. is applied to the composite girder section resulting in an elastic downward deflection.
8. **Final Camber** – It might be expected that the above deck slab dead load deflection would be accompanied by a continuing downward deflection due to creep. However, many measurements of actual structure deflections have shown that once the deck slab is poured, the girder tends to act as though it is locked in position. To obtain a smooth riding surface on the deck, the deflection indicated on Figure 5.2.4-1 as "Screed Camber" (known as "C") is added to the profile grade elevation of the deck screeds. The "C" dimension and the "Screed Setting Dimensions" detail shall be given in the plans.

D. **Pre-camber –** Precast prestressed girders may be precambered to compensate for the natural camber and for the effect of the roadway geometry. Precambering is allowed upon approval of the WSDOT Bridge Design Engineer.

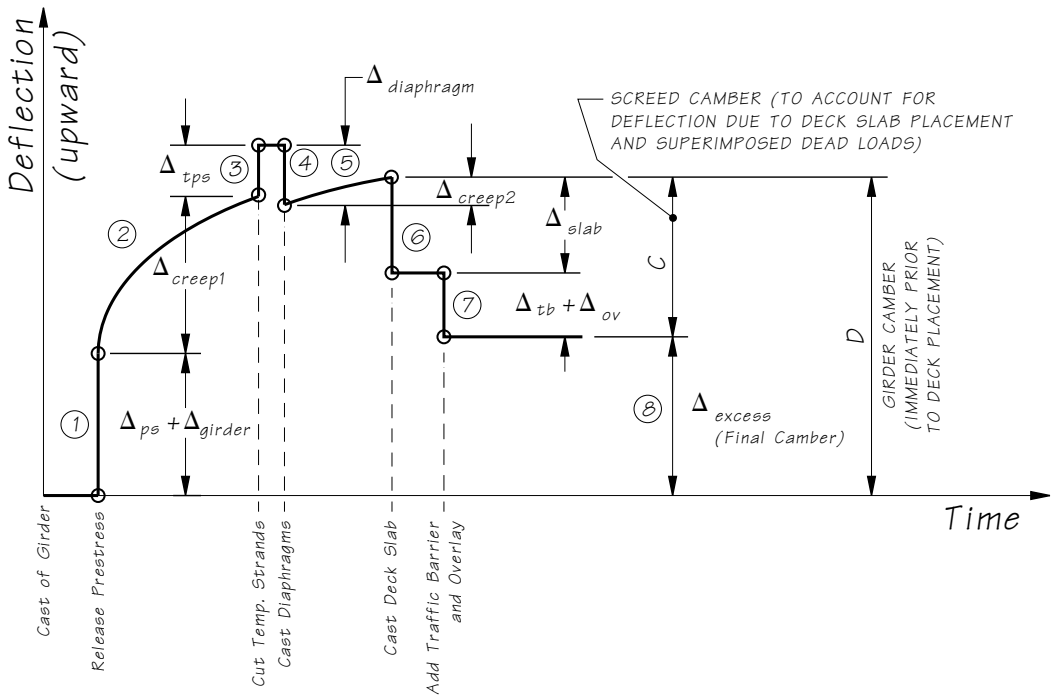

Prestressed Girder Camber
Figure 5.2.4-1

5.2.5 Construction Joints

Construction joints must divide the structure into a logical pattern of separate elements which also permit ease of manufacture and assembly.

The joint surfaces should be oriented perpendicular to the centroidal axis of the precast element.

A. Types of Joints:

Joints are either wide or match cast. Depending on their width, they may be filled with CIP concrete or grout. Match cast joints are normally bonded with an epoxy bonding agent. Dry match cast joints are not recommended.

B. Shear Keys:

In order to assist shear transmission in wide joints, use a suitable system of keys. The shape of the keys may be chosen to suit a particular application and they can be either single keys or multiple keys. Single keys are generally large and localized whereas multiple keys generally cover as much of the joint surface area as is practical.

Single keys provide an excellent guide for erection of elements. Single keys are preferred for all match cast joints.

For all types of joints, the surfaces must be clean, free from grease and oil, etc. When using epoxy for bonding, the joints shall be lightly sandblasted to remove laitance. For CIP or other types of wide joints, the adjacent concrete surfaces shall be roughened and kept thoroughly wet, prior to construction of the joint. CIP joints are generally preferred.

5.2.6 Inspection Lighting and Access

A. **Confined Spaces –** See Section 10.8.1 for design requirements for confined spaces.

B. **Access Hatch, Air Vent Holes and Inspection Lighting**

- For box girders with less than 4 ft inside clear height, inspection lighting and access need not be provided. Utilities and/or restrainers will not be permitted inside the girder cell.
- For box girders with 4 ft or more inside clear height, but less than 6.5 ft, inspection lighting and access shall be provided only if utilities and/or restrainers are provided inside the box girder.
- For box girders with 6.5 ft or more inside clear height, inspection lighting and access shall always be provided.
- For prestressed tub girders, inspection lighting and access shall not be provided. Utilities and/or restrainers will not be permitted inside the girder.

When access is required for inspection and maintenance, ventilation details shall also be included. Access hatches with doors should be placed in the bottom slab and holes must be at a minimum 2′-6″ diameter or 2′-6″ square. If locks are needed, they must be keyed to one master. Figures 5.2.6-1 and 5.2.6-2 show Access hatch details and Air Vent details respectively. Refer to the WSDOT *Design Manual* Chapter 1040 for bridge inspection lighting requirements. Coordinate with the Region Office to include lighting with the electrical plans.

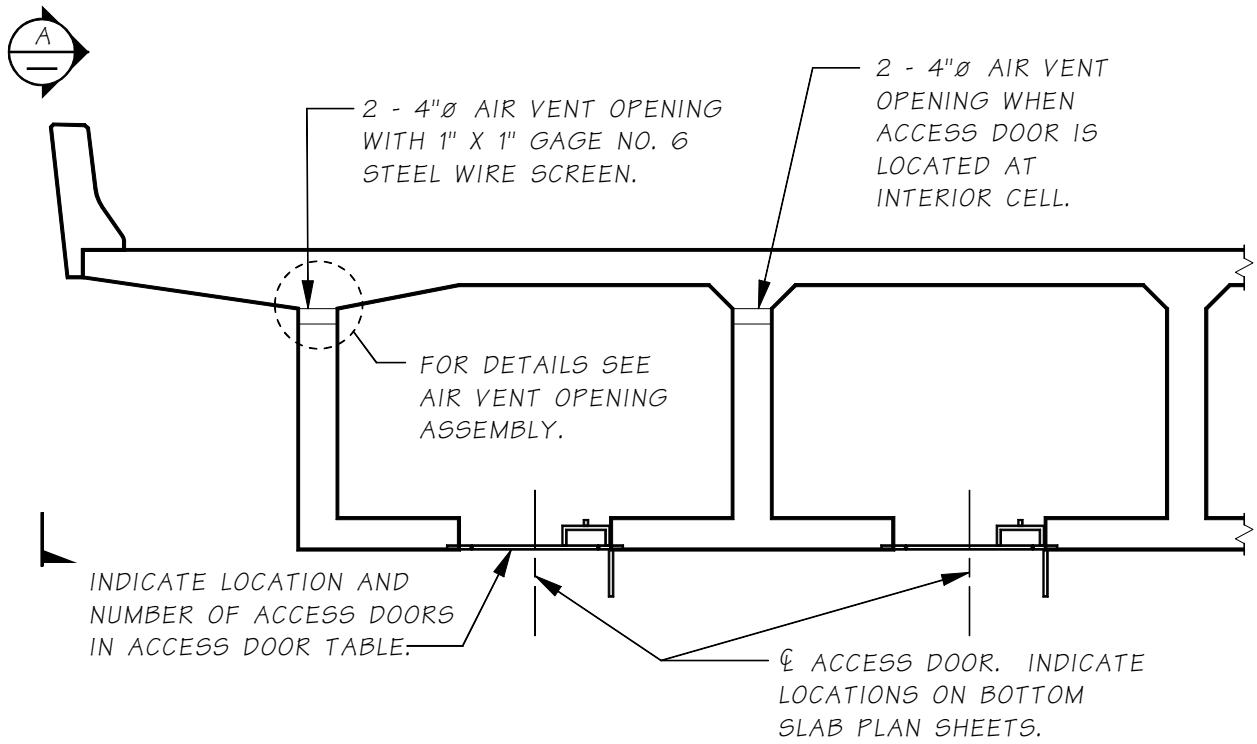

ELEVATION - AIR VENT HOLE IN WEBS

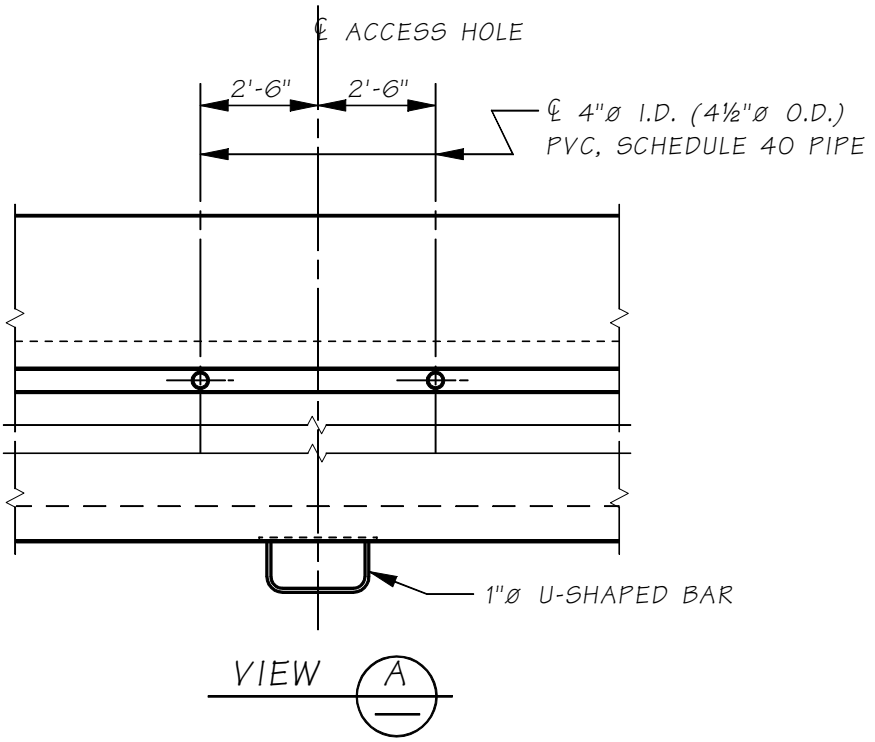

Access Hatch Details

Figure 5.2.6-1

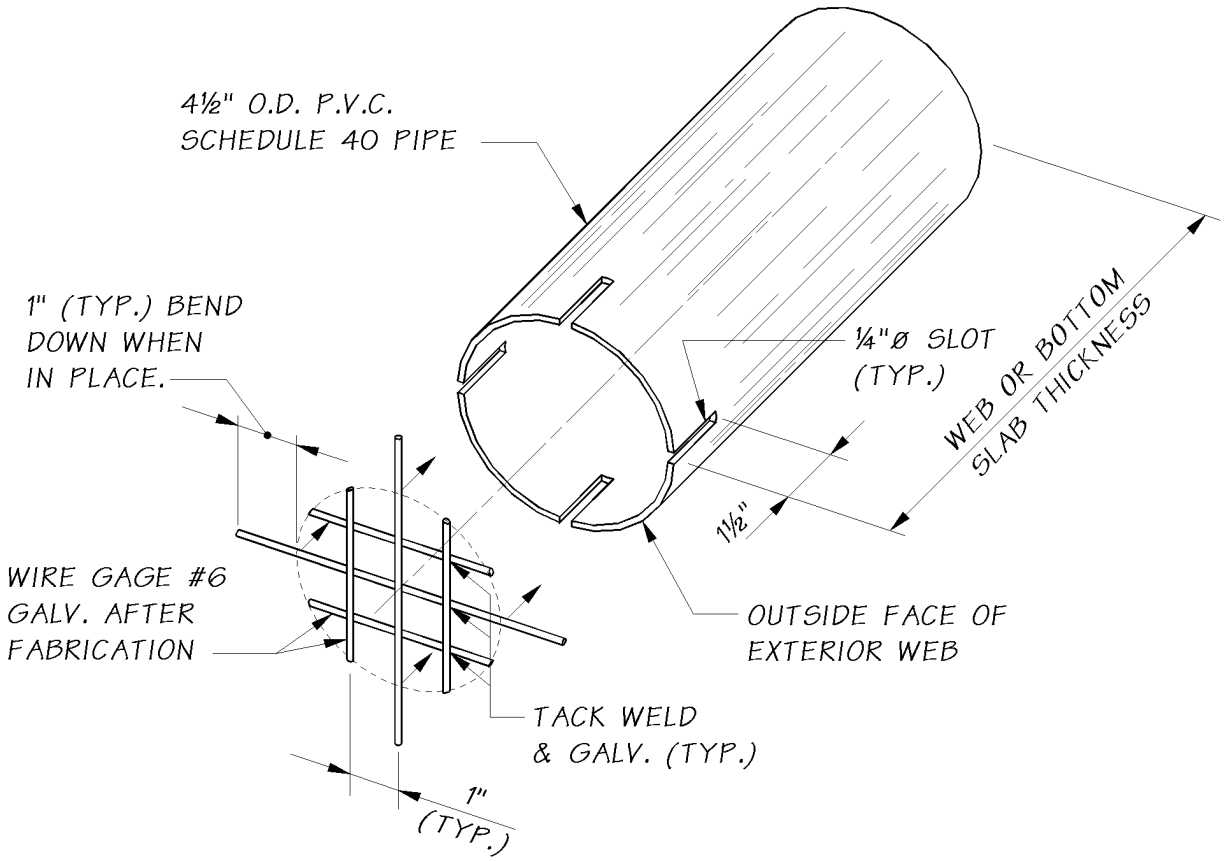

Air Vent Opening Detail
Figure 5.2.6-2

5.3 Reinforced Concrete Box Girder Bridges

Post-tensioning shall be required for all new CIP reinforced concrete single-span or multi-span box girder bridges.

The use of CIP reinforced concrete (RC) box girder bridges without post-tensioning shall be restricted to widening existing RC box girder bridges. RC box girder bridges may also be used for bridges with tight curvatures or irregular geometry upon the WSDOT Bridge Design Engineer's approval. Partial prestressing shall not be considered for design of RC box girders.

The performance and longevity of RC box girder bridges have been a major concern. Cracking in RC box girders are flexural in nature and are an inherent part of reinforced concrete design. RC box girders are designed for ultimate strength and checked for distribution of reinforcement for service conditions and control of cracking. This means that the concrete cracks under applied loads but the cracks are under control. Open cracks in RC box girders result in rebar corrosion and concrete deterioration, affecting the bridge longevity. Post-tensioning RC box girders eliminates cracks, limits corrosion, and improves structural performance.

The above requirements apply equally to RC T-beam and slab bridges. However, these types of superstructures are not encouraged. See also Sections 2.4.1.C & D.

5.3.1 Box Girder Basic Geometries

A. **Web Spacing –** The most economical web spacing for ordinary box girder bridges varies from about 8 to 12 feet. Greater girder spacing requires some increase in both top and bottom slab thickness, but the cost of the additional concrete can be offset by decreasing the total number of girder stems. Fewer girder stems reduces the amount of form work required and can lower costs.

The number of girder stems can be reduced by cantilevering the top slab beyond the exterior girders. A deck overhang of approximately one-half the girder spacing generally gives satisfactory results. This procedure usually results in a more aesthetic as well as a more economical bridge.

For girder stem spacing in excess of 12 feet or cantilever overhang in excess of 6 feet, transverse post-tensioning shall be used.

B. **Basic Dimensions –** The basic dimensions for concrete box girders with vertical and sloped exterior webs are shown in Figures 5.3.1-1 & 2, respectively.

1. **Top Slab Thickness, T1** – (includes ½″ wearing surface)

   $T1 = \frac{12(S+10)}{30}$ but not less than 7″ with overlay or 7.5″ without overlay.

2. **Bottom Slab Thickness, T2** –

   a. Near center span

      $T2 = \frac{12\,S_{clr}}{16}$ but not less than 5.5″ (normally 6.0″ is used).

   b. Near intermediate piers

      Thickening of the bottom slab is often used in negative moment regions to control compressive stresses that are significant.

      Transition slope = 24:1 (see T2 in Figure 5.3.1-1).

3. **Girder Stem (Web) Thickness, T3**

   a. **Near Center Span**

      Minimum T3 = 9.0″ — vertical

      Minimum T3 = 10.0″ — sloped

b. **Near Supports –** Thickening of girder stems is used in areas adjacent to supports to control shear requirements.

Changes in girder web thickness shall be tapered for a minimum distance of 12 times the difference in web thickness.

Maximum T3 = T3 + 4.0″ maximum

Transition length = 12 x (difference in web thickness)

4. **Intermediate Diaphragm Thickness, T4 and Diaphragm Spacing**

a. For tangent and curved bridge with R > 800 feet

T4 = 0″ (diaphragms are not required.)

b. For curved bridge with R < 800 feet

T4 = 8.0″

Diaphragm spacing shall be as follows:

For 600′ < R < 800′at ½ pt. of span.

For 400′ < R < 600′ at ⅓ pt. of span.

For R < 400′ at ¼ pt. of span.

C. **Construction Considerations –** Review the following construction considerations to minimize constructability problems:

1. Construction joints at slab/stem interface or fillet/stem interface at top slab are appropriate.
2. All construction joints to have roughened surfaces.
3. Bottom slab is parallel to top slab (constant depth).
4. Girder stems are vertical.
5. Dead load deflection and camber to nearest ⅛″.
6. Skew and curvature effects have been considered.
7. Thermal effects have been considered.
8. The potential for falsework settlement is acceptable. This always requires added stirrup reinforcement in sloped outer webs.

D. **Load Distribution**

1. **Unit Design –** According to the AASHTO LRFD Specifications, the entire slab width shall be assumed effective for compression. It is both economical and desirable to design the entire superstructure as a unit rather than as individual girders. When a reinforced box girder bridge is designed as an individual girder with a deck overhang, the positive reinforcement is congested in the exterior cells. The unit design method permits distributing all girder reinforcement uniformly throughout the width of the structure.
2. **Dead Loads –** Include additional D.L. for top deck forms:

5 lbs. per sq. ft. of the area.

10 lbs. per sq. ft. if web spacing > 10′-0″.

3. **Live Load –** See Section 3.9.4 for live load distribution to superstructure and substructure.

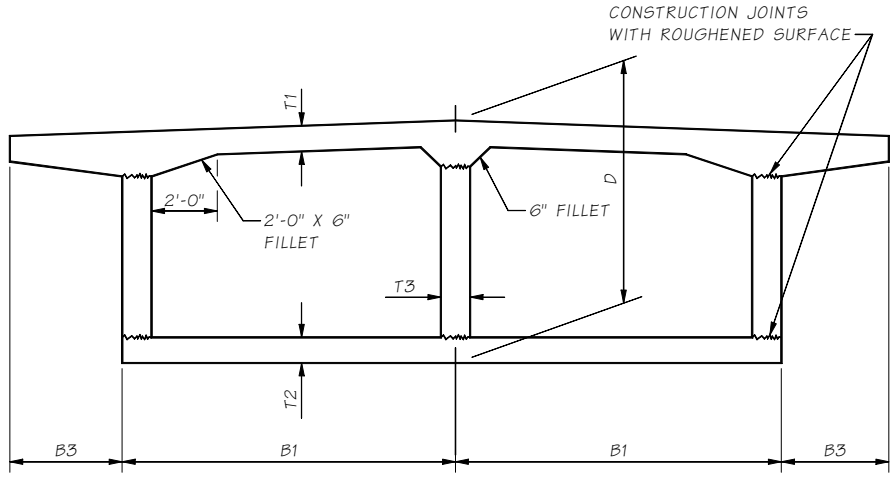

(a)

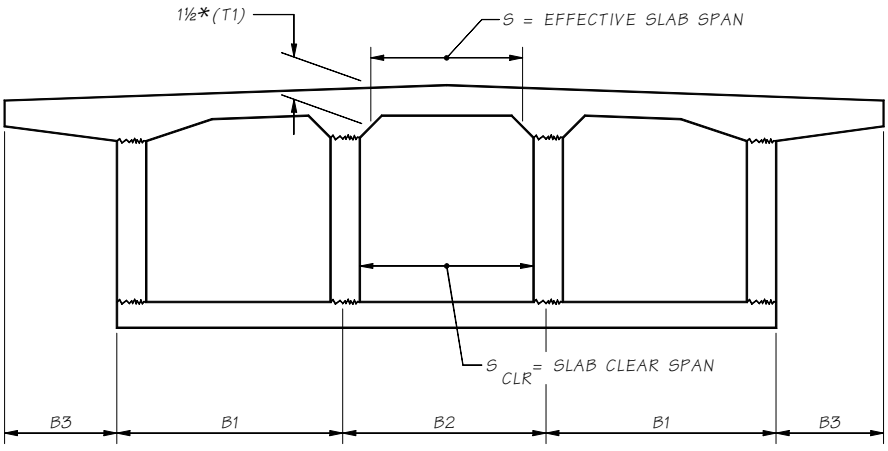

(b)

Basic Dimensions - Vertical Webs
Figure 5.3.1-1

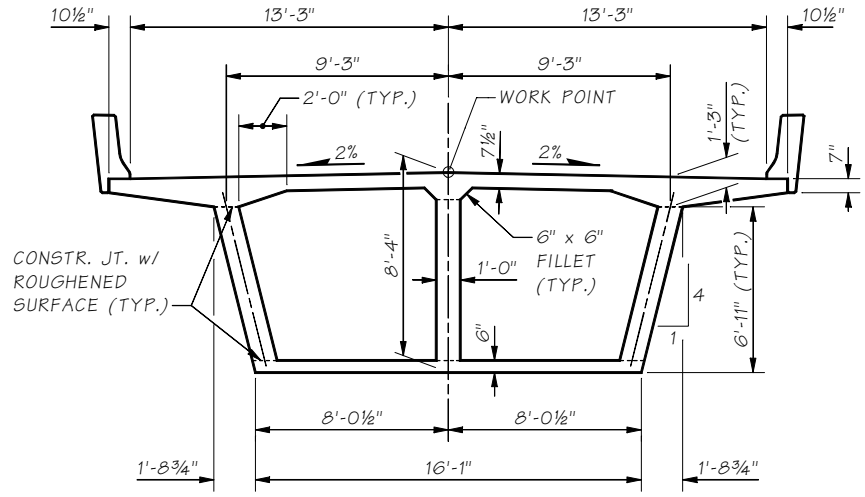

a - 2% CROWN

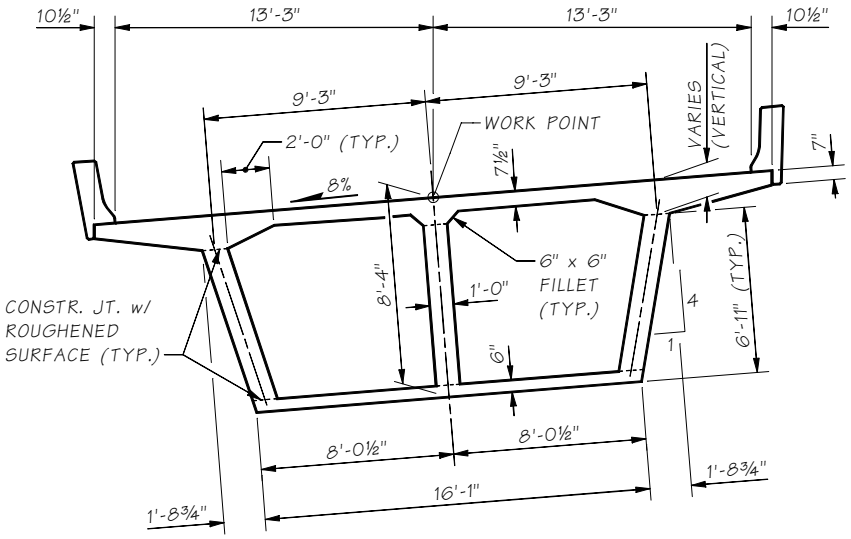

b - 8% SUPERELEVATION

BASIC DIMENSIONS
SLOPED WEBS

Dimensions are shown for demonstration only

Basic Dimensions - Sloped Webs
Figure 5.3.1-2

5.3.2 Reinforcement

This section discusses flexural and shear reinforcement for top slab, bottom slab, webs, and intermediate diaphragms in box girders.

A. **Top Slab Reinforcement**

1. **Near Center of Span –** Figure 5.3.2-1 shows the reinforcement required near the center of the span and Figure 5.3.2-2 shows the overhang reinforcement.
   a. Transverse reinforcing in the top and bottom layers to transfer the load to the main girder stems.
   b. Bottom longitudinal "distribution reinforcement" in the middle half of the deck span in S_{eff} is provided to aid distributing the wheel loads.
   c. Top longitudinal "temperature and shrinkage reinforcement."
2. **Near Intermediate Piers –** Figure 5.3.2-3 illustrates the reinforcement requirement near intermediate piers.
   a. Transverse reinforcing same as center of span.
   b. Longitudinal reinforcement to resist negative moment (see Figure 5.3.2-3).
   c. "Distribution of flexure reinforcement" to limit cracking shall satisfy the requirement of AASHTO LRFD 5.7.3.4 for class 2 exposure condition.
3. **Bar Patterns**
   a. **Transverse Reinforcement –** It is preferable to place the transverse reinforcement normal to bridge center line and the areas near the expansion joint and bridge ends are reinforcement by partial length bars.
   b. **Longitudinal Reinforcement**

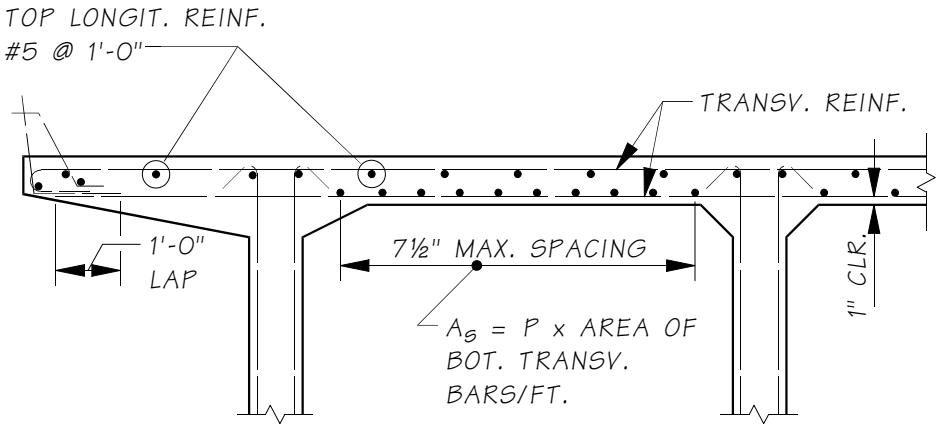

$$P = \frac{220}{\sqrt{S}} \qquad (MAX. = .67)$$

Partial Section Near Center of Span
Figure 5.3.2-1

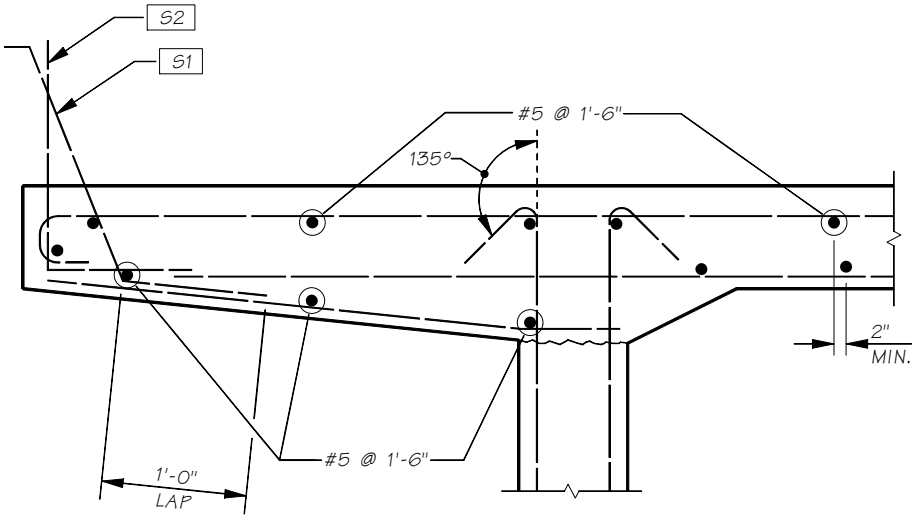

Overhang Detail
Figure 5.3.2-2

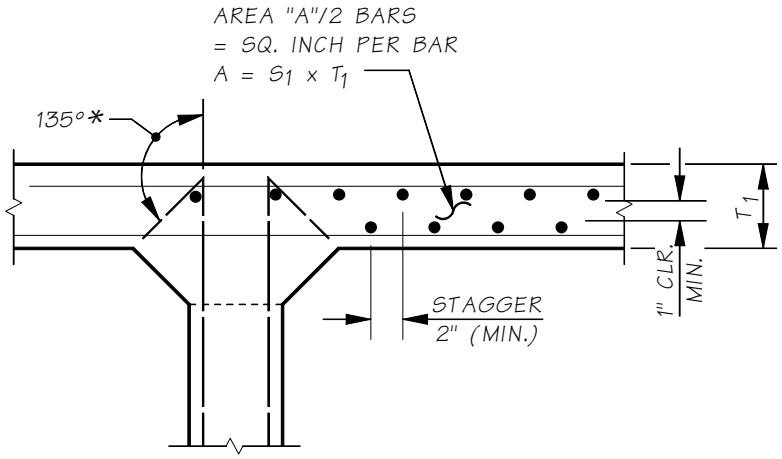

* ALL REBARS SHALL BE EPOXY COATED, BEND STIRRUPS 135 DEGREES. DO NOT EPOXY COAT STIRRUPS.

Top Slab Flexural Reinforcing Near Intermediate Pier
Figure 5.3.2-3

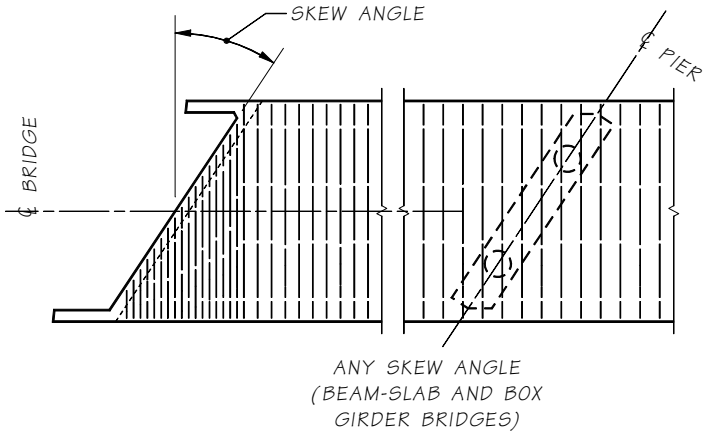

Partial Plans at Abutments
Figure 5.3.2-4

B. **Bottom Slab Reinforcement**

1. **Near Center of Span –** Figure 5.3.2-5 shows the reinforcement required near the center of the span.

   a. Minimum transverse "distributed reinforcement."

   A_s = 0.005 × flange area with ½A_s distributed equally to each surface.

   b. Longitudinal "main reinforcement" to resist positive moment.

   c. Check "distribution of flexure reinforcement" to limit cracking per AASHTO LRFD 5.7.3.4 for class 2 exposure condition.

   d. Add steel for construction load (sloped outer webs).

2. **Near Intermediate Piers –** Figure 5.3.2-6 shows the reinforcement required near intermediate piers.

   a. Minimum transverse reinforcement same as center of span.

   b. Minimum longitudinal "temperature and shrinkage reinforcement."

   A_s = 0.004 × flange area with ½A_s distributed equally to each face.

   c. Add steel for construction load (sloped outer webs).

3. **Bar Patterns**

   a. **Transverse Reinforcement –** All bottom slab transverse bars shall be bent at the outside face of the exterior web. For a vertical web, the tail splice will be 1′-0″ and for sloping exterior web 2′-0″ minimum splice with the outside web stirrups. See Figure 5.3.2-7.

   b. **Longitudinal Reinforcement –** For longitudinal reinforcing bar patterns, see Figures 5.3.2-5 & 6.

C. **Web Reinforcement**

1. **Vertical Stirrups –** Vertical stirrups for a reinforced concrete box section is shown in Figure 5.3.2-8.

   The web reinforcement shall be designed for the following requirements:

   Vertical shear requirements.

   - Out of plane bending on outside web due to live load on cantilever overhang.
   - Horizontal shear requirements for composite flexural members.
   - Minimum stirrups shall be:

$$\frac{A_v}{s} = 50\frac{b_w}{f_y} \qquad (5.3.2\text{-}1)$$

   but not less than #5 bars at 1′-6″,

   Where: b_W is the number of girder webs x T3

2. **Web Longitudinal Reinforcement –** Web longitudinal reinforcement for reinforced concrete box girders is shown in Figures 5.3.2-8 & 9. The area of skin reinforcement A_{sk} per foot of height on each side face shall be:

$$A_{sk} \geq 0.012(d - 30) \qquad (5.3.2\text{-}2)$$

Reinforcing steel spacing < Web thickness (T3) or 12″.

The maximum spacing of skin reinforcement shall not exceed the lesser of d/6 and 12″. Such reinforcement may be included in strength computations if a strain compatibility analysis is made to determine stresses in the individual bars or wires. The total area of longitudinal skin reinforcement in both faces need not exceed one half of the required flexural tensile reinforcement.

For CIP sloped outer webs, increase inside stirrup reinforcement and bottom slab top transverse reinforcement as required for the web moment locked-in during construction of the top slab. This moment about the bottom corner of the web is due to tributary load from the top slab concrete placement plus 10 psf form dead load. See Figure 5.3.2-10 for typical top slab forming.

D. **Intermediate Diaphragm –** Intermediate diaphragms are not required for bridges on tangent alignment or curved bridges with an inside radius of 800 feet or greater.

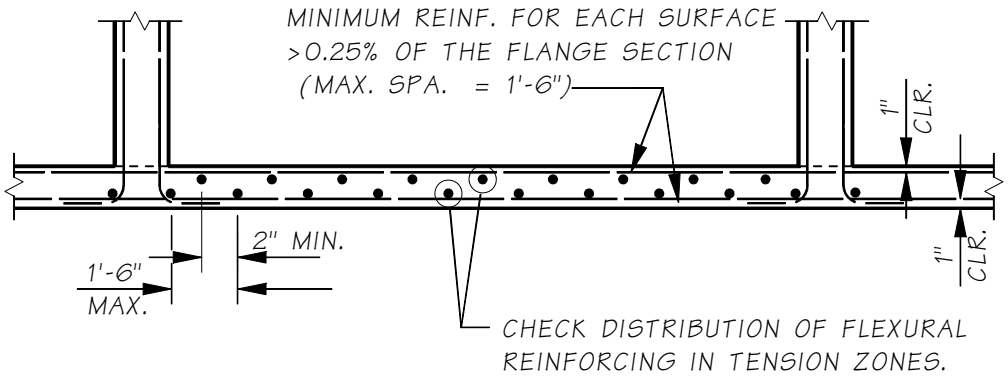

Bottom Slab Reinforcement Near Center of Span
Figure 5.3.2-5

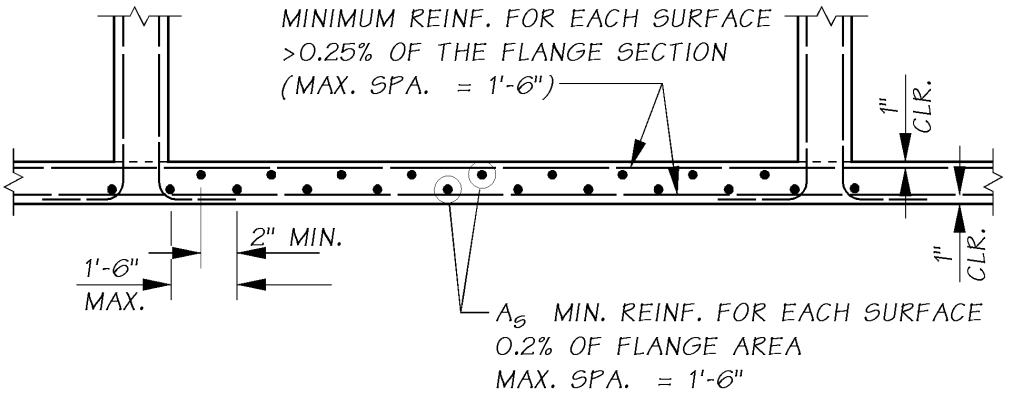

Bottom Slab Reinforcement Near Intermediate Pier
Figure 5.3.2-6

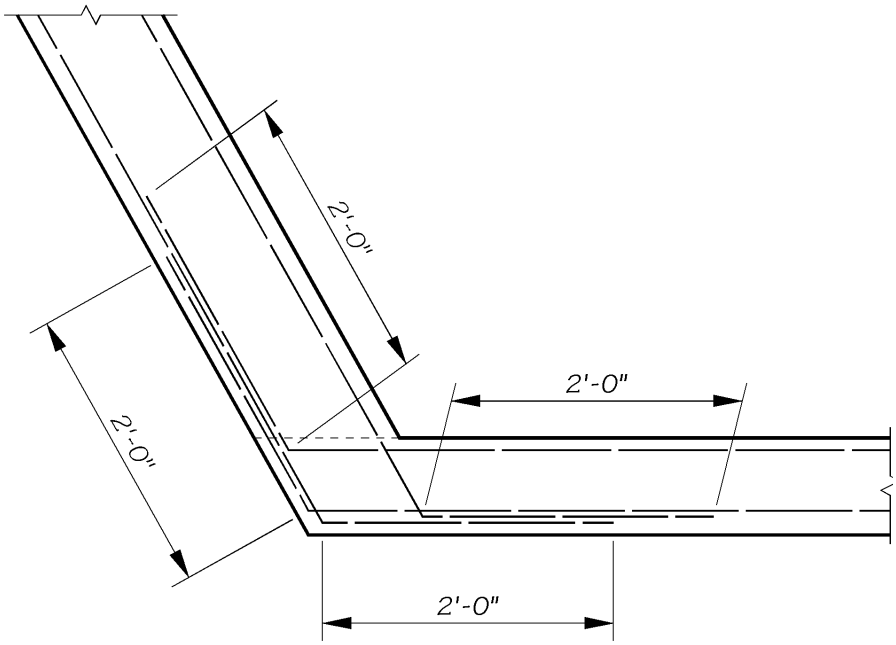

SLOPED WEB

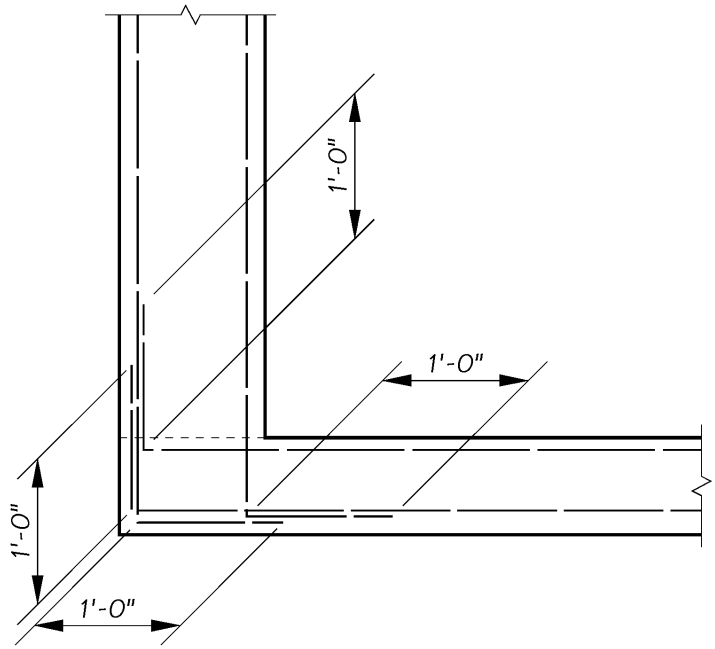

VERTICAL WEB

Web Reinforcement

Figure 5.3.2-7

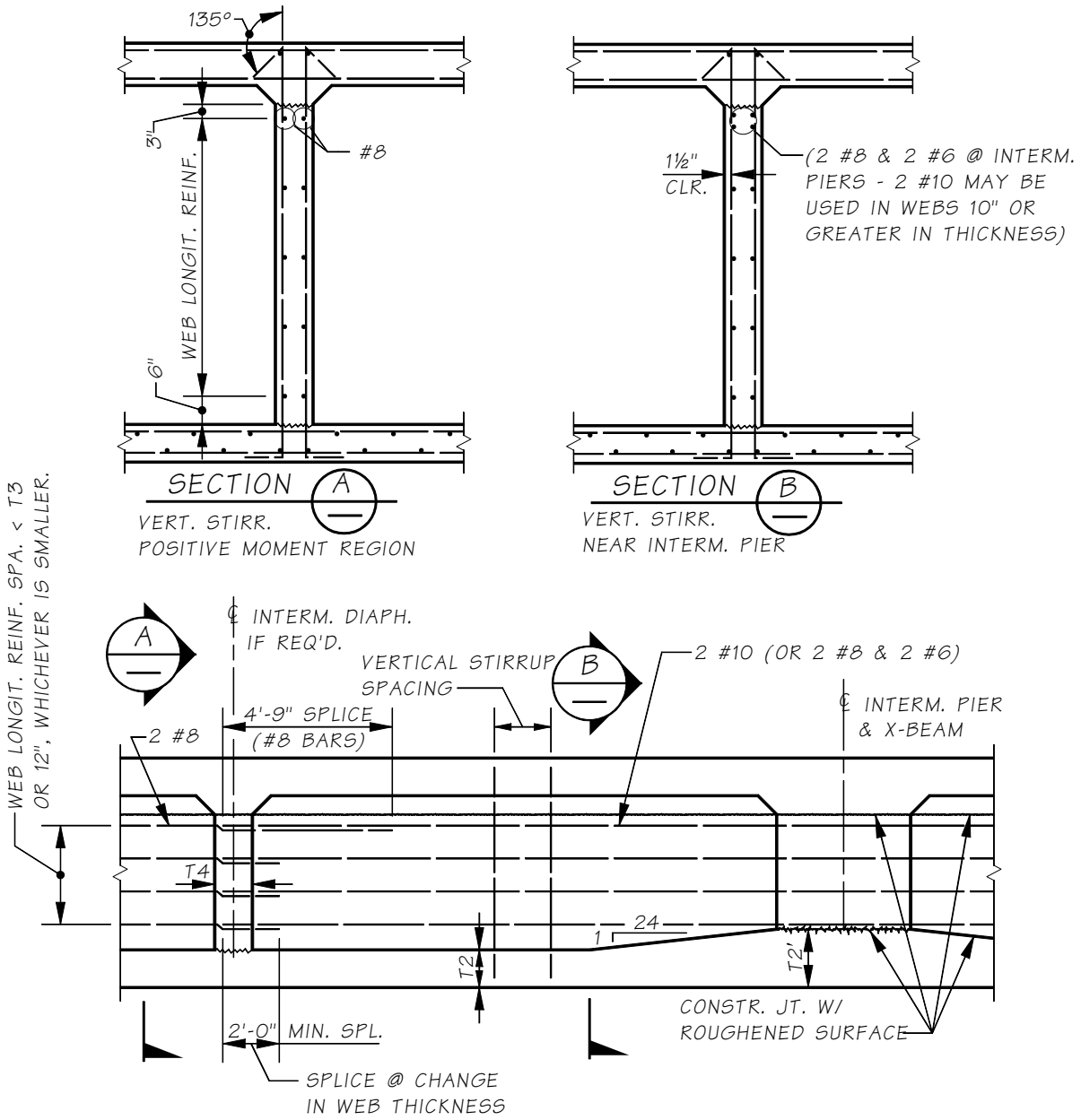

PARTIAL LONGITUDINAL GIRDER SECTION

Use 2 #10 (2 #8 & 2 #6 for 10" or less webs) at dead load negative moment region near piers. The length of shall be extended 35 diameters beyond the dead load point of inflecton. Do not splice the #10 (#8) bars near the pier. The #6 bars may be spliced at center pier. Use 2 #8 only for the positive moment region.

Web Reinforcement Details
Figure 5.3.2-8

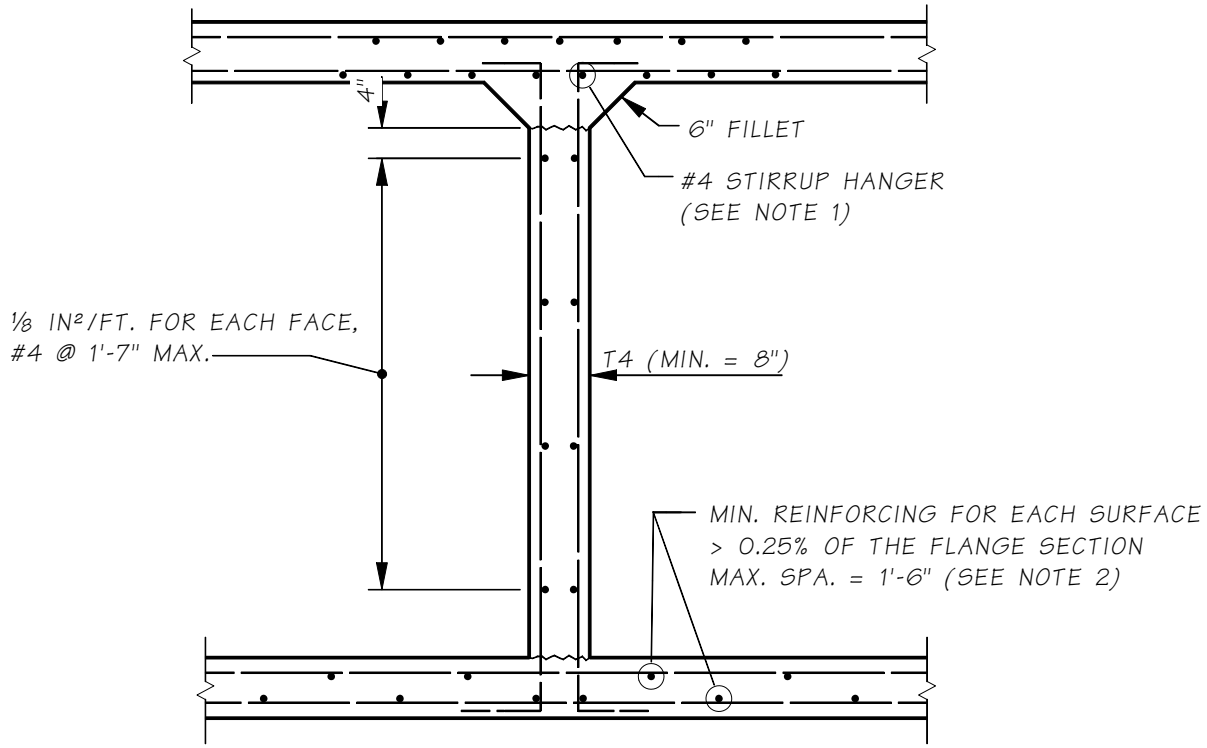

1. Stirrup hanger must be placed above longitudinal steel when diaphragm is skewed and slab reinforcement is placed normal to center of roadway. (Caution: Watch for the clearance with longitudinal steel.)

2. The reinforcement should have at least one splice to facilitate proper bar placement.

Web Reinforcement Details
Figure 5.3.2-9

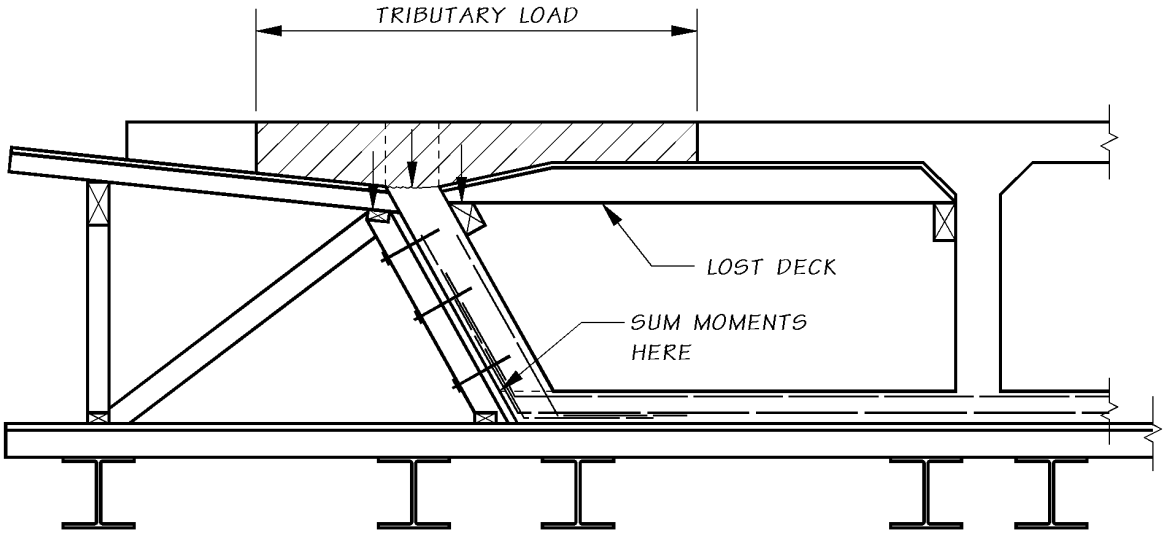

Notes:

1. The diagonal brace supports web forms during web pour. After cure, the web is stiffer than the brace, and the web attracts load from subsequent concrete placements.
2. The tributary load includes half the overhang because the outer web form remains tied to and transfers load to the web which is considerably stiffer than the formwork.
3. Increase web reinforcement for locked-in construction load due to top slab forming for sloped web box girders.

Typical Top Slab Forming for Sloped Web Box Girder

Figure 5.3.2-10

5.3.3 Crossbeam

A. **General –** Crossbeam shall be designed in accordance with the requirements of strength limit state design of AASHTO LRFD Specifications and shall satisfy the serviceability requirements for crack control.

B. **Basic Geometry –** For aesthetic purposes, it is preferable to keep the crossbeam within the superstructure so that the bottom slab of the entire bridge is a continuous plane surface interrupted only by the columns. Although the depth of the crossbeam may be limited, the width can be made as wide as necessary to satisfy design requirements. Normally, it varies from 3 feet to the depth of box but is not less than the column size plus 1′-0″ to allow placement of the column reinforcement as shown in see Figures 5.3.3-1 and 2.

Crossbeams on box girder type of construction shall be designed as a T beam utilizing the flange in compression, assuming the deck slab acts as a flange for positive moment and bottom slab a flange for negative moment. The effective overhang of the flange on a cantilever beam shall be limited to six times the flange thickness.

The bottom slab thickness is frequently increased near the crossbeam in order to keep the main box girder compressive stresses to a desirable level for negative girder moments as shown in Figures 5.3.3-1 & 2. This bottom slab flare also helps resist negative crossbeam moments. Consideration should be given to flaring the bottom slab at the crossbeam for designing the cap even if it is not required for resisting main girder moments.

C. **Loads –** For concrete box girders the superstructure dead load shall be considered as uniformly distributed over the crossbeam. For concrete box girders the live load shall be considered as the truck load directly to the crossbeam from the wheel axles. Truck axles shall be moved transversely over the crossbeam to obtain the maximum design forces for the crossbeam and supporting columns.

D. **Reinforcement Design and Details –** The crossbeam section consists of rectangular section with overhanging deck and bottom slab if applicable. The effective width of the crossbeam flange overhang shall be taken as the lesser of:

- 6 times slab thickness,
- 1/10 of column spacing, or
- 1/20 of crossbeam cantilever as shown in Figure 5.3.3-3.

The crossbeam shall have a minimum width of column dimension plus 6″.

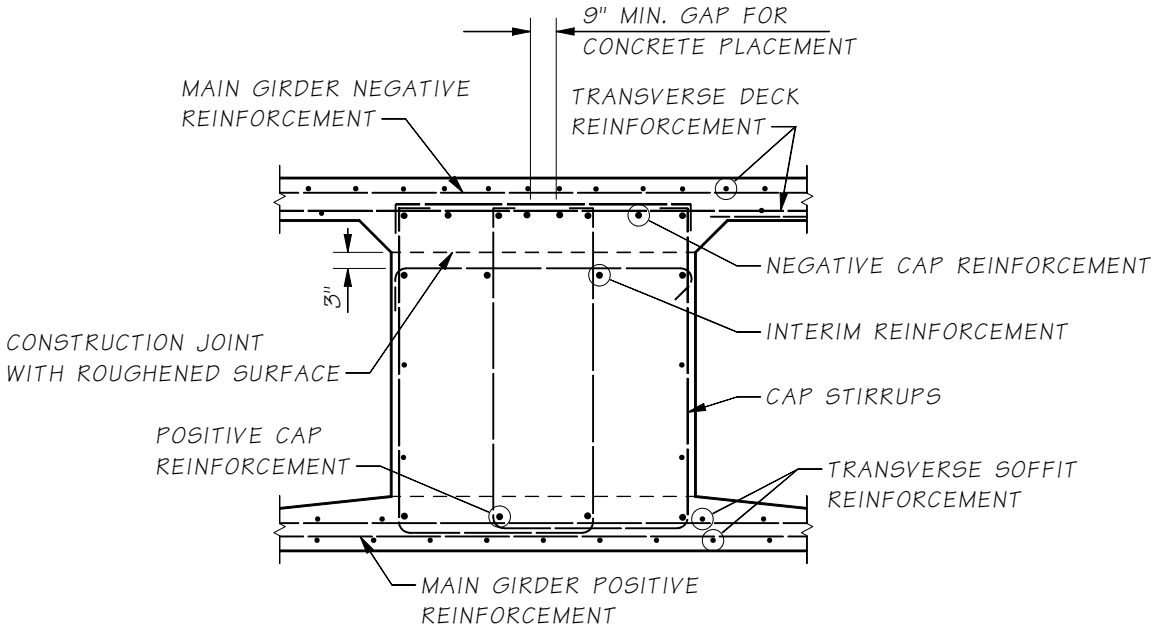

Crossbeam Top Reinforcement for Skew Angle ≤ 25°
Figure 5.3.3-1

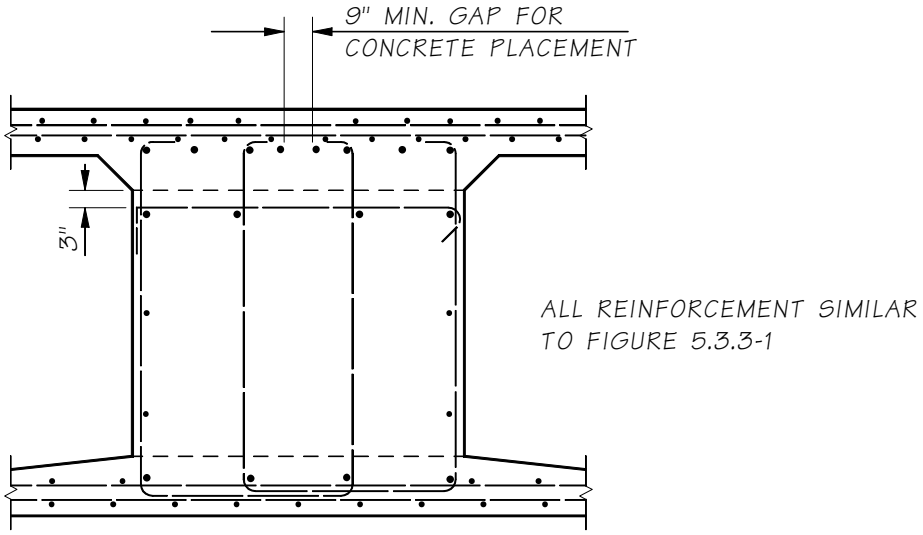

Crossbeam Top Reinforcement for Skew Angle > 25°
Figure 5.3.3-2

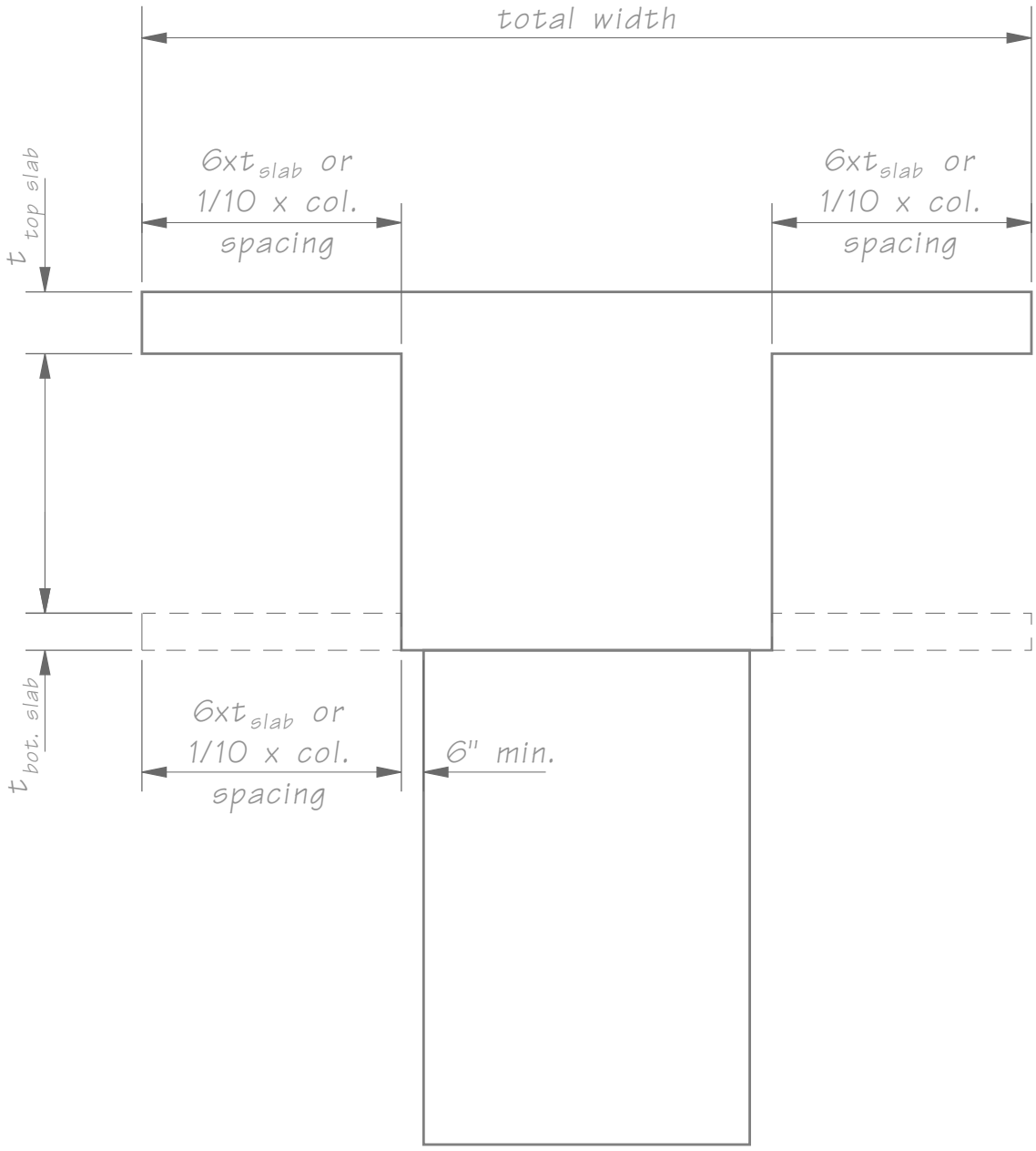

Effective Width of Crossbeam
Figure 5.3.3-3

Crossbeam is usually cast to the fillet below the top slab. To avoid cracking of concrete on top of the crossbeam, construction reinforcement shall be provided at approximately 3″ below the construction joint. The design moment for construction reinforcement shall be the factored negative dead load moment due to the weight of crossbeam and adjacent 10′ of superstructure each side. The total amount of construction reinforcement shall be adequate to develop an ultimate moment at the critical section at least 1.2 times the cracking moment M_{cr}.

Special attention should be given to the details to ensure that the column and crossbeam reinforcement will not interfere with each other. This can be a problem especially when round columns with a great number of vertical bars must be meshed with a considerable amount of positive crossbeam reinforcement passing over the columns.

1. **Top Reinforcement –** The negative moment critical section shall be at the ¼ point of the square or equivalent square columns.

   a. **When Skew Angle ≤ 25° –** If the bridge is tangent or slightly skewed deck transverse reinforcement is normal or radial to centerline bridge, the negative cap reinforcement can be placed either in contact with top deck negative reinforcement (see Figure 5.3.3-1) or directly under the main deck reinforcement.

   b. **When Skew Angle > 25° –** When the structure is on a greater skew and the deck steel is normal or radial to the longitudinal centerline of the bridge, the negative cap reinforcement should be lowered to below the main deck reinforcement (see Figure 5.3.3-2).

   c. **To avoid cracking of concrete** – Interim reinforcement is required below the construction joint in crossbeams.

      The interim reinforcement shall meet the minimum flexure reinforcement requirements of 5.1.2.H.1.

2. **Skin Reinforcement –** Longitudinal skin reinforcement shall be provided per AASHTO LRFD 5.7.3.4.

5.3.4 End Diaphragm

A. **Basic Geometry –** Bearings at the end diaphragms are usually located under the girder stems to transfer loads directly to the pier as shown in Figure 5.3.4-1. In this case, the diaphragm width shall be equal to or greater than bearing grout pads as shown Figure 5.3.4-2.

Designer shall provide access space for maintenance and inspection of bearings.

Allowance shall be provided to remove and replace the bearings. Lift point locations, jack capacity, number of jacks, and maximum permitted lift shall be shown in the plan details.

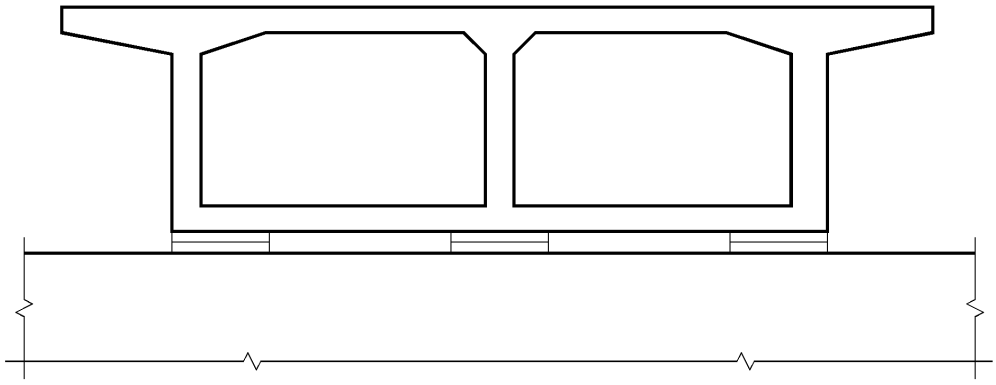

Bearing Locations at End Diaphragm
Figure 5.3.4-1

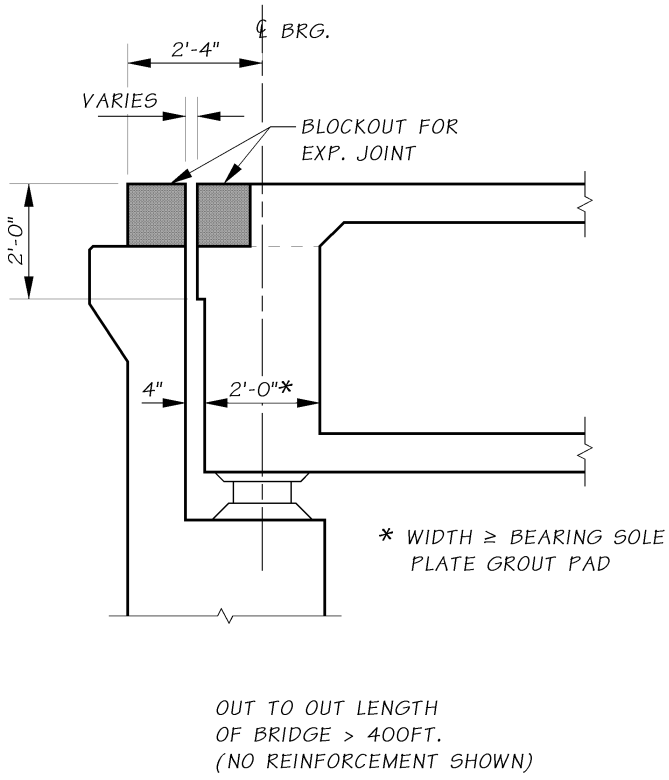

L-shape Abutment End Diaphragm
Figure 5.3.4-2

The most commonly used type of end diaphragm is shown in Figure 5.3.4-3. The dimensions shown here are used as a guideline and should be modified if necessary. This end diaphragm is used with a stub abutment and overhangs the stub abutment. It is used on bridges with an overall length less than 400 feet. If the overall length exceeds 400 feet, an L-shape abutment should be used.

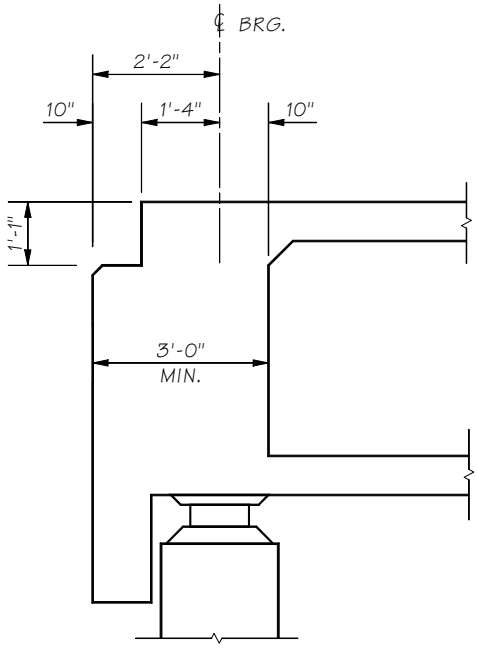

End Diaphragm with Stub Abutment
Figure 5.3.4-3

B. **Reinforcing Steel Details –** Typical reinforcement details for an end diaphragm are shown in Figure 5.3.4-4.

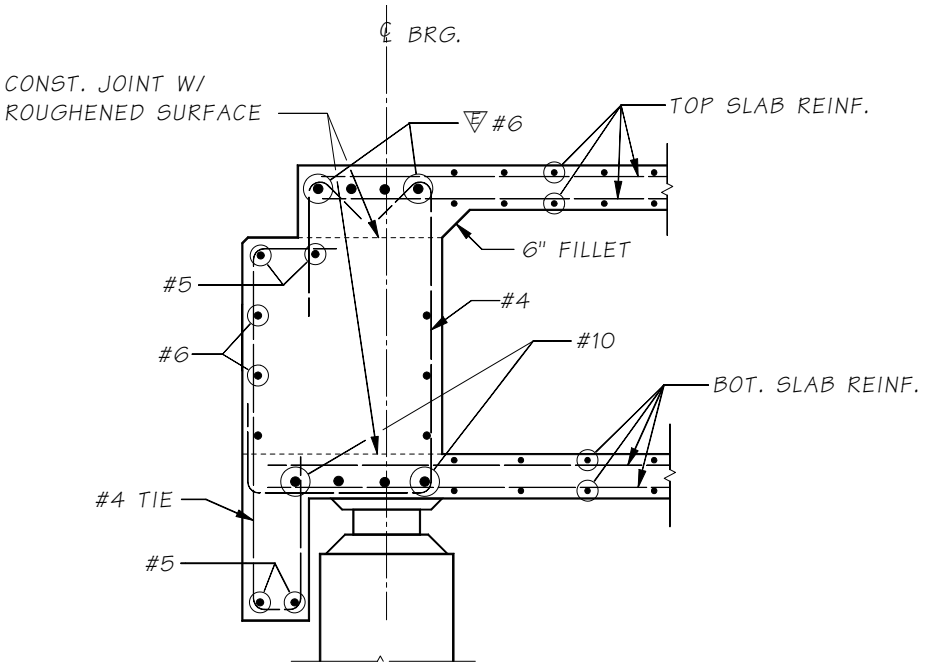

Typical End Diaphragm Reinforcement
Figure 5.3.4-4

5.3.5 Dead Load Deflection and Camber

Camber is the adjustment made to the vertical alignment to compensate for the anticipated dead load deflection and the long-term deflection caused by shrinkage and creep. Estimating long-term deflection and camber for reinforced concrete flexural members shall be based on the creep coefficient given in Section 5.1.1E. Alternatively, Table 5.3.5-1 may be used for long-term camber multipliers.

	Multiplier Coefficient
Girder Adjacent to Existing/Stage Construction	
Deflection (downward) — apply to the elastic deflection due to the weight of member	1.90
Deflection (downward) — apply to the elastic deflection due to superimposed dead load only	2.20
Girder Away From Existing/Stage Construction	
Deflection (downward) — apply to the elastic deflection due to the weight of member	2.70
Deflection (downward) — apply to the elastic deflection due to superimposed dead load only	3.00

Long-term Camber Multipliers
Table 5.3.5-1

In addition to dead load deflection, forms and falsework tend to settle and compress under the weight of freshly placed concrete. The amount of this take-up is dependent upon the type and design of the falsework, workmanship, type and quality of materials and support conditions. The camber shall be modified to account for anticipated take-up in the falsework.

5.3.6 Thermal Effects

Concrete box girder bridges are subjected to stresses and/or movements resulting from temperature variation. Temperature effects result from time-dependent variations in the effective bridge temperature and from temperature differentials within the bridge superstructure.

A. **Effective Bridge Temperature and Movement –** Proper temperature expansion provisions are essential in order to ensure that the structure will not be damaged by thermal movements. These movements, in turn, induce stresses in supporting elements such as columns or piers, and result in horizontal movement of the expansion joints and bearings. For more details, see Chapter 8.

B. **Differential Temperature –** Although time-dependent variations in the effective temperature have caused problems in both reinforced and prestressed concrete bridges, detrimental effects caused by temperature differential within the superstructure have occurred only in prestressed bridges. Therefore, computation of stresses and movements resulting from the vertical temperature gradients is not included in this chapter. For more details, see AASHTO Guide Specifications, Thermal Effects on Concrete Bridge Superstructures dated 1989.

5.3.7 Hinges

Hinges are one of the weakest links of box girder bridges subject to earthquake forces and it is desirable to eliminate hinges or reduce the number of hinges. For more details on the design of hinges, see Section 5.4.

Designer shall provide access space or pockets for maintenance and inspection of bearings.

Allowance shall be provided to remove and replace the bearings. Lift point locations, maximum lift permitted, jack capacity, and number of jacks shall be shown in the hinge plan details.

5.3.8 Drain Holes

Drain holes shall be placed in the bottom slab at the low point of each cell to drain curing water during construction and any rain water that leaks through the deck slab. Additional drains shall be provided as a safeguard against water accumulation in the cell (especially when waterlines are carried by the bridge). In some instances, drainage through the bottom slab is difficult and other means shall be provided (i.e., cells over large piers and where a sloping exterior web intersects a vertical web). In this case, a horizontal drain shall be provided through the vertical web. Figure 5.3.8-1 shows drainage details for the bottom slab of concrete box girder bridges with steel wire screen.

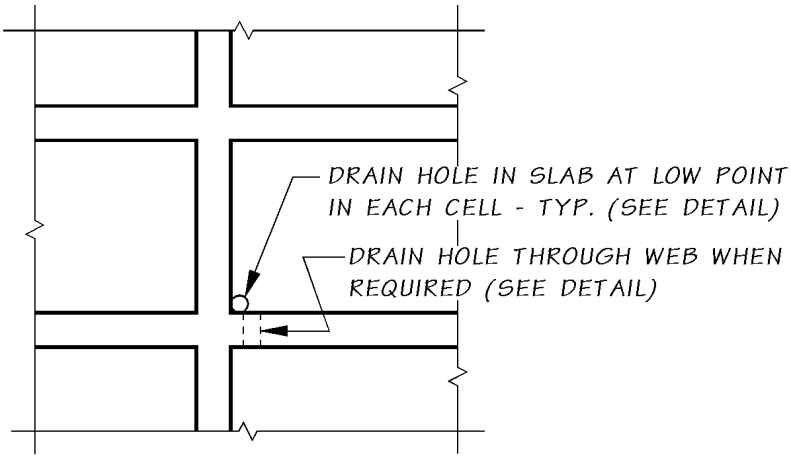

DRAIN HOLES
SHOWN ON FRAMING PLAN

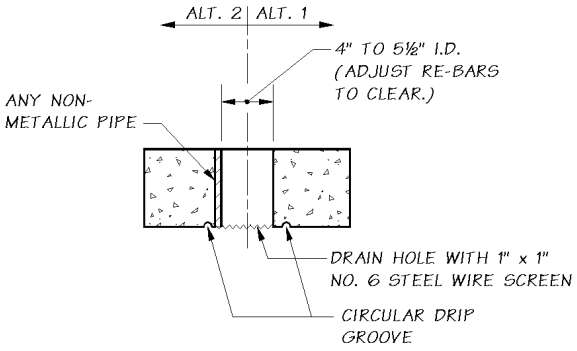

BOTTOM SLAB
DRAIN HOLE DETAIL

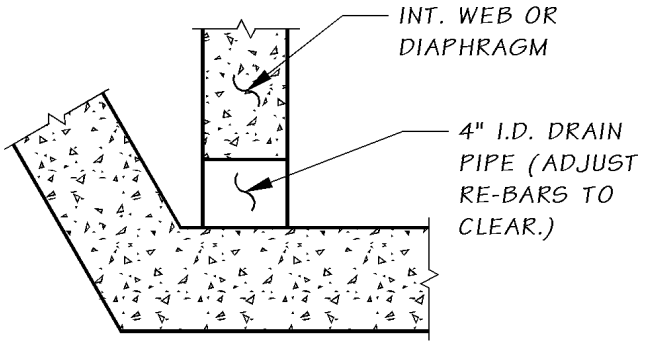

WEB DRAIN
HOLE DETAIL

Drain Hole Details
Figure 5.3.8-1

5.4 Hinges and Inverted T-Beam Pier Caps

Hinges and inverted T-beam pier caps require special design and detailing considerations. Continuous hinge shelves (both top and bottom projecting shelves) and continuous ledges of inverted T-beam pier caps, which support girders, are shown in Figure 5.4-1. In each case, vertical tensile forces (hanger tension) act at the intersection of the web and the horizontal hinge shelf or ledge. In the ledges of inverted T-beam pier caps, passage of live loads may also cause reversing torsional stresses which together with conventional longitudinal shear and bending produce complex stress distributions in the ledges[7, 8].

Figure 5.4-2 provides minimum shelf or ledge support lengths (N) and provides positive longitudinal linkage (e.g., earthquake restrainers) in accordance with the current AASHTO LRFD specifications for seismic design requirements. Design considerations for beam ledges, inverted T-beam and hinges are given in AASHTO LRFD 5.13.2.5.

Inverted T-beam pier caps shall not be used for precast girder bridges unless approved by the WSDOT Bridge Design Engineer.

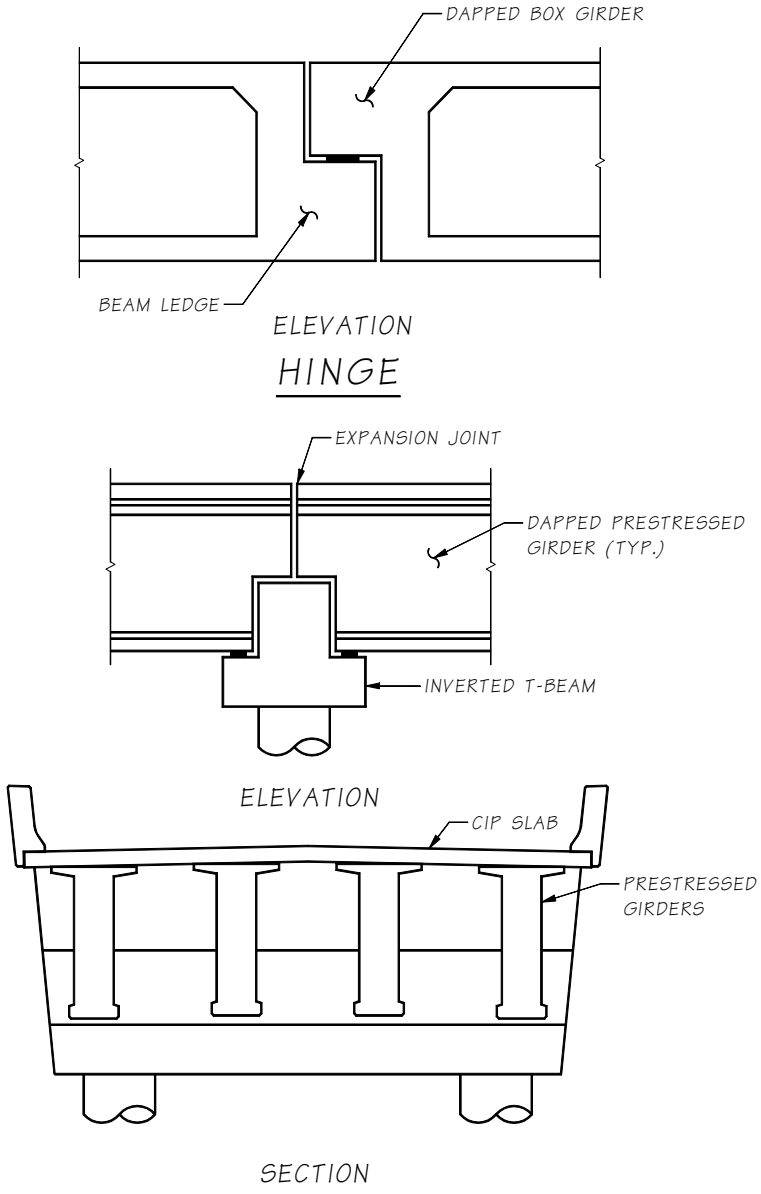

Hinge and Inverted T-Beam Pier Cap
Figure 5.4-1

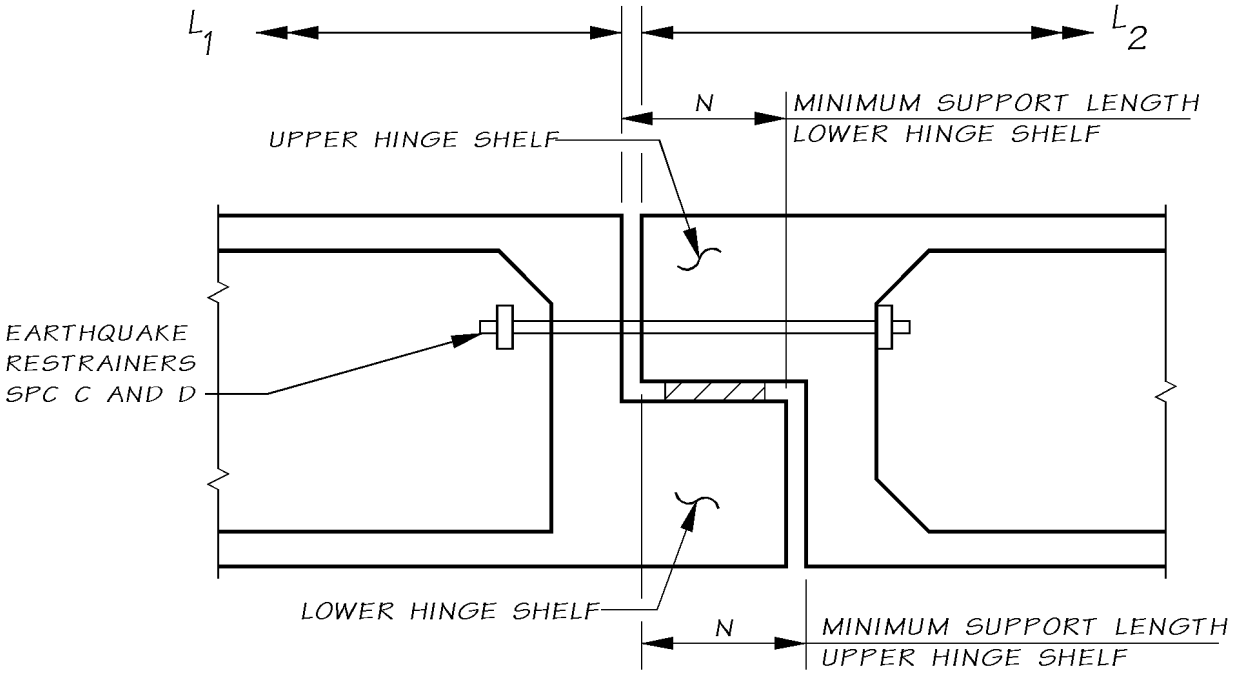

In-Span Hinge
Figure 5.4-2

5.5 Bridge Widenings

This section provides general guidance for the design of bridge widenings. Included are additions to the substructure and the superstructure of reinforced concrete box girder, flat slab, T-beam, and precast prestressed girder bridges. For additional information, see ACI Committee Report, Guide for Widening Highway Bridges[9].

5.5.1 Review of Existing Structures

A. **General –** Obtain the following documents from existing records for preliminary review, design, and plan preparation:

1. The "As-Built" contract plans, usually available from the "Bridge Engineering Information System" on the Bridge and Structures Office website.
2. The original contract plans and special provisions, which can be obtained from Engineering Records (Plans Vault), Records Control or the "Bridge Engineering Information System" on the Bridge and Structures Office website.
3. Check with the Bridge Preservation Unit for records of any unusual movements/rotations and other structural information.
4. Original design calculations, which are stored in State Archives and can be retrieved by Bridge Records personnel.
5. Current field data on Supplemental Site Data Form (including current deck elevations and cross slopes), are obtained from Region. Current field measurements of existing pier crossbeam locations are recommended so that new prestressed girders are not fabricated too short or too long. This is particularly important if piers have been constructed with different skews.
6. Original and current Foundation Reports from the Materials Lab or from the Plans Vault.
7. Change Order files to the original bridge contract in Records Control Unit.

B. **Original Contract Plans and Special Provisions –** Location and size of reinforcement, member sizes and geometry, location of construction joints, details, allowable design soil pressure, and test hole data are given on the plans. Original contract plans can be more legible than the microfilm copies.

The special provisions may include pertinent information that is not covered on the plans or in the AASHTO LRFD Specifications.

C. **Original Calculations –** The original calculations should be reviewed for any "special assumptions" or office criteria used in the original design. The actual stresses in the structural members, which will be affected by the widening, should be reviewed. This may affect the structure type selected for the widening.

D. **Final Records –** For major widening/renovation projects, the Final Records should be reviewed particularly for information about the existing foundations and piles. Sometimes the piles indicated on the original plans were omitted, revised, or required preboring. Final Records are available from Records Control or Bridge Records (Final Records on some older bridges may be in storage at the Materials Lab).

5.5.2 Analysis and Design Criteria

A. **General –** Each widening represents a unique situation and construction operations may vary between widening projects. The guidelines in this section are based on years of WSDOT design experience with bridge widenings.

1. **Appearance –** The widening of a structure should be accomplished in such a manner that the existing structure does not look "added on to." When this is not possible, consideration should be given to enclosure walls, cover panels, paint, or other aesthetic treatments. Where possible and appropriate, the structure's appearance should be improved by the widening.

2. **Materials –** Preferably, materials used in the construction of the widening shall have the same thermal and elastic properties as the materials in the original structure.

3. Load Distribution and Construction Sequence

   The members of the widening should be proportioned to provide similar longitudinal and transverse load distribution characteristics as the existing structure. Normally this can be achieved by using the same cross sections and member lengths that were used in the existing structure.

   The construction sequence and degree of interaction between the widening and the existing structure, after completion, shall be fully considered in determining the distribution of the dead load for design of the widening and stress checks for the existing structure.

   A suggested construction sequence or stage construction shall be clearly shown in the plans to avoid confusion and misinterpretation during construction. A typical construction sequence may involve placing the deck concrete, removing the falsework, placing the concrete for the closure strip, and placing the concrete for the traffic barrier.

4. **Specifications –** The design of the widening shall conform to the current AASHTO LRFD Specifications and the WSDOT *Standard Specifications for Road, Bridge, and Municipal Construction*.

5. **Geometrical Constraints –** The overall appearance and geometrical dimensions of the superstructure and columns of the widening should be the same or as close as possible to those of the existing structure. This is to ensure that the widening will have the same appearance and similar structural stiffness as the original structure.

6. **Overlay –** It should be established at the preliminary plan stage if an overlay is required as part of the widening.

7. **Strength of the Existing Structure –** A review of the strength of the main members of the existing structure shall be made for construction conditions utilizing AASHTO LRFD specifications.

   A check of the existing main members after attachment of the widening shall be made for the final design loading condition.

   If the existing structural elements do not have adequate strength, consult your supervisor or in the case of consultants, contact the Consultant Liaison Engineer for appropriate guidance.

   If significant demolition is required on the existing bridge, consideration should be given to requesting concrete strength testing for the existing bridge and including this information in the contract documents.

8. **Special Considerations**

   a. For structures that were originally designed for HS-20 loading, HL-93 shall be used to design the widening. For structures that were originally designed for less than HS-20, consideration should be given to replacing the structure instead of widening it.

   b. Longitudinal joints are not permitted in order to eliminate potentially hazardous vehicle control problems.

   c. The WSDOT *Standard Specifications* do not permit falsework to be supported from the existing structure unless the Plans and Specifications state otherwise. This requirement eliminates the transmission of vibration from the existing structure to the widening during construction. The existing structure may still be in service.

   d. For narrow widenings where the Plans and Specifications require that the falsework be supported from the original structure (e.g., there are no additional girders, columns, crossbeams, or closure strips), there shall be no external rigid supports such as posts or falsework from the ground. Supports from the ground do not permit the widening to deflect with the existing structure when traffic is on the existing structure. This causes the uncured concrete of the widening to crack where it joins the existing structure. Differential dead load deflection during construction shall be given consideration.

   e. Precast members may be used to widen existing CIP structures. This method is useful when the horizontal or vertical clearances during construction are insufficient to build CIP members.

   f. The alignment for diaphragms for the widening shall generally coincide with the existing diaphragms.

   g. When using battered piles, estimate the pile tip elevations and ensure that they will have ample clearance from all existing piles, utilities, or other obstructions. Also check that there is sufficient clearance between the existing structure and the pile driving equipment.

B. **Seismic Design Criteria for Bridge Widenings –** Seismic design of bridge widenings shall be per Section 4.3.

C. **Substructure**

1. **Selection of Foundation**

   a. The type of foundation to be used to support the widening shall generally be the same as that of the existing structure unless otherwise recommended by the Geotechnical Engineer. The effects of possible differential settlement between the new and the existing foundations shall be considered.

   b. Consider present bridge site conditions when determining new foundation locations. The conditions include: overhead clearance for pile driving equipment, horizontal clearance requirements, working room, pile batters, channel changes, utility locations, existing embankments, and other similar conditions.

2. **Scour and Drift –** Added piles and columns for widenings at water crossings may alter stream flow characteristics at the bridge site. This may result in pier scouring to a greater depth than experienced with the existing configuration. Added substructure elements may also increase the possibility of trapping drift. The Hydraulics Engineer shall be consulted concerning potential problems related to scour and drift on all widenings at water crossings.

D. **Superstructure**

1. **Camber –** Accurate prediction of dead load deflection is more important for widenings than for new bridges, since it is essential that the deck grades match.

   To obtain a smooth transition in transverse direction of the bridge deck, the camber of the girder adjacent to the existing structure shall be adjusted for the difference in camber between new and existing structure. A linear interpolation may be used to adjust the camber of the girders located away from the existing structure. The multipliers for estimating camber of new structure may be taken as shown in Table 5.3.5-1.

2. **Closure Strip –** Except for narrow deck slab widenings a closure strip is required for all CIP widenings. The width shall be the minimum required to accommodate the necessary reinforcement and for form removal. Reinforcement, which extends through the closure strip shall be investigated. Shear shall be transferred across the closure strip by shear friction and/or shear keys.

   All falsework supporting the widening shall be released and formwork supporting the closure strip shall be supported from the existing and newly widened structures prior to placing concrete in the closure strip. Because of deck slab cracking experienced in widened concrete decks, closure strips are required unless the mid-span dead load camber is ½″ or less.

3. **Stress Levels and Deflections in Existing Structures –** Caution is necessary in determining the cumulative stress levels, deflections, and the need for shoring in existing structural members during rehabilitation projects.

   For example, a T-beam bridge was originally constructed on falsework and the falsework was released after the deck slab concrete gained strength. As part of a major rehabilitation project, the bridge was closed to traffic and the entire deck slab was removed and replaced without shoring. Without the deck slab, the stems behave as rectangular sections with a reduced depth and width. The existing stem reinforcement was not originally designed to support the weight of the deck slab without shoring. After the new deck slab was placed, wide cracks from the bottom of the stem opened, indicating that the reinforcement was overstressed. This overstress resulted in a lower load rating for the newly rehabilitated bridge. This example shows the need to shore up the remaining T-beam stems prior to placing the new deck slab so that excessive deflections do not occur and overstress in the existing reinforcing steel is prevented.

   It is necessary to understand how the original structure was constructed, how the rehabilitated structure is to be constructed, and the cumulative stress levels and deflections in the structure from the time of original construction through rehabilitation.

E. **Stability of Widening –** For relatively narrow box girder and T-beam widenings, symmetry about the vertical axis should be maintained because lateral loads are critical during construction. When symmetry is not possible, use pile cap connections, lateral connections, or special falsework. A minimum of two webs is generally recommended for box girder widenings. For T-beam widenings that require only one additional web, the web should be centered at the axis of symmetry of the deck slab. Often the width of the closure strip can be adjusted to accomplish this.

   In prestressed girder bridge widenings with one or two lines of new girders, the end and intermediate diaphragms shall be placed prior to the deck slab casting to ensure the stability of the girders during construction. The closure shall be specified for deck slab but shall not be required for diaphragms. The designer shall investigate the adequacy of the existing girder adjacent to the widening for the additional load due to the weight of wet deck slab transferred through the diaphragms, taking into account the loss of removed overhang and barrier. The diaphragms must be made continuous with existing diaphragms.

5.5.3 Removing Portions of the Existing Structure

Portions of the existing structure to be removed shall be clearly indicated on the plans. Where a clean break line is required, a ¾″ deep saw cut shall be specified for a deck slab with normal wear and a ½″ deep saw cut for worn deck slabs. In no case, however, shall the saw blade cut or nick the main transverse top slab reinforcement. The special provisions shall state that care will be taken not to damage any reinforcement which is to be saved. Hydromilling is preferred where reinforcing bar cover is shallow and can effectively remove delaminated decks because of the good depth control it offers. When greater depths of slab are to be removed, special consideration should be given to securing exposed reinforcing bars to prevent undue vibration and subsequent fatigue cracks from occurring in the reinforcing bars.

The current General Special Provisions should be reviewed for other specific requirements on deck slab removal.

Removal of any portion of the main structural members should be held to a minimum. Careful consideration shall be given to the construction conditions, particularly when the removal affects the existing frame system. In extreme situations, preloading by jacking is acceptable to control stresses and deflections during the various stages of removal and construction. Removal of the main longitudinal deck slab reinforcement should be kept to a minimum. See "Slab Removal Detail" Figure 5.5.4-1 for the limiting case for the maximum allowable removal.

The plans shall include a note that critical dimensions and elevations are to be verified in the field prior tothe fabrication of precast units or expansion joint assemblies.

In cases where an existing sidewalk is to be removed but the supporting slab under the sidewalk is to be retained, Region personnel should check the feasibility of removing the sidewalk. Prior to design, Region personnel should make recommendations on acceptable removal methods and required construction equipment. The plans and specifications shall then be prepared to accommodate these recommendations. This will ensure the constructibility of plan details and the adequacy of the specifications.

5.5.4 Attachment of Widening to Existing Structure

A. **General**

1. **Lap and Mechanical Splices –** To attach a widening to an existing structure, the first choice is to utilize existing reinforcing bars by splicing new bars to existing. Lap splices or mechanical splices should be used. However, it may not always be possible to splice to existing reinforcing bars and spacing limitations may make it difficult to use mechanical splices.

2. **Welding Reinforcement –** Existing reinforcing steel may not be readily weldable. Mechanical splices should be used wherever possible. If welding is the only feasible means, the chemistry of the reinforcing steel must be analyzed and acceptable welding procedures developed.

3. **Drilling Into Existing Structure –** It may be necessary to drill holes and set dowels in epoxy resin in order to attach the widening to the existing structure.

   When drilling into heavily reinforced areas, chipping should be specified to expose the main reinforcing bars. If it is necessary to drill through reinforcing bars or if the holes are within 4 inches of an existing concrete edge, core drilling shall be specified. Core drilled holes shall be roughened before resin is applied. If this is not done, a dried residue, which acts as a bond breaker and reduces the load capacity of the dowel, will remain. Generally, the drilled holes are ⅛″ in diameter larger than the dowel diameter for #5 and smaller dowels and ¼″ in diameter larger than the dowel diameter for #6 and larger dowels.

   In special applications requiring drilled holes greater than 1½″ diameter or deeper than 2′, core drilling shall be specified. These holes shall also be intentionally roughened prior to applying epoxy resin.

Core drilled holes shall have a minimum clearance of 3″ from the edge of the concrete and 1″ clearance from existing reinforcing bars in the existing structure. These clearances shall be noted in the plans.

4. **Dowelling Reinforcing Bars Into the Existing Structure**

   a. Dowel bars shall be set with an approved epoxy resin. The existing structural element shall be checked for its adequacy to transmit the load transferred to it from the dowel bars.

   b. Dowel spacing and edge distance affect the allowable tensile dowel loads. Allowable tensile loads, dowel bar embedment, and drilled hole sizes for reinforcing bars (Grade 60) used as dowels and set with an approved epoxy resin are shown in Table 5.5.4-1. These values are based on an edge clearance greater than 3″, a dowel spacing greater than 6″, and are shown for both uncoated and epoxy coated dowels. Table 5.5.4-2 lists dowel embedment lengths when the dowel spacing is less than 6″. Note that in Table 5.5.4-2 the edge clearance is equal to or greater than 3″, because this is the minimum edge clearance for a drilled hole from a concrete edge.

      If it is not possible to obtain these embedments, such as for traffic railing dowels into existing deck slabs, the allowable load on the dowel shall be reduced by the ratio of the actual embedment divided by the required embedment.

   c. The embedments shown in Table 5.5.4-1 and Table 5.5.4-2 are based on dowels embedded in concrete with f'_c=4,000 psi.

Bar Size	Allowable Design Tensile Load, T* (kips)	Drill Hole Size (in)	Required Embedment, L_e	
			Uncoated (in)	Epoxy Coated (in)
#4	12.0	⅝	7	8
#5	18.6	¾	8	9
#6	26.4	1	9	10
#7	36.0	1⅛	11	12
#8	47.4	1¼	13	14.5
#9	60.0	1⅜	16	17½
#10	73.6	1½	20	22
#11	89.0	1⅝	25	28

* Allowable Tensile Load (Strength Design) = $(f_y)(A_s)$.

Allowable Tensile Load for Dowels Set With Epoxy Resin f'_c = 4,000 psi, Grade 60 Reinforcing Bars, Edge Clearance ≥ 3″, and Spacing ≥ 6″
Table 5.5.4-1

Bar Size	Allowable Design Tensile Load, T* (kips)	Drill Hole Size (in)	Required Embedment, L_e	
			Uncoated (in)	Epoxy Coated (in)
#4	12.0	⅝	9½	10½
#5	18.6	¾	10½	11½
#6	26.4	1	11½	12½
#7	36.0	1⅛	13½	15
#8	47.4	1¼	16½	18
#9	60.0	1⅜	20	22
#10	73.6	1½	24	27
#11	89.0	1⅝	30	33

*Allowable Tensile Load (Strength Design) = $(f_y)(A_s)$.

Allowable Tensile Load for Dowels Set With Epoxy Resin, f'_c=4,000 psi, Grade 60 Reinforcing Bars, Edge Clearance ≥ 3″, and Spacing < 6″
Table 5.5.4-2

5. **Shear Transfer Across a Dowelled Joint –** Shear shall be carried across the joint by shear friction. The existing concrete surface shall be intentionally roughened. Both the concrete and dowels shall be considered effective in transmiting the shear force. Chipping shear keys in the existing concrete can also be used to transfer shear across a dowelled joint, but is expensive.

6. **Preparation of Existing Surfaces for Concreting –** See "Removing Portions of Existing Concrete" in the General Special Provisions and Standard Specification 6-02.3(12) for requirements. Unsound, damaged, dirty, porous, or otherwise undesirable old concrete shall be removed, and the remaining concrete surface shall be clean, free of laitance, and intentionally roughened to ensure proper bond between the old and new concrete surfaces.

7. **Control of Shrinkage and Deflection on Connecting Reinforcement –** Dowels that are fixed in the existing structure may be subject to shear as a result of longitudinal shrinkage and vertical deflection when the falsework is removed. These shear forces may result in a reduced tensile capacity of the connection. When connecting the transverse reinforcing bars across the closure strip is unavoidable, the interaction between shear and tension in the dowel or reinforcing bar shall be checked. The use of wire rope or sleeved reinforcement may be acceptable, subject to approval by your supervisor.

   Where possible, transverse reinforcing bars shall be spliced to the existing reinforcing bars in a blocked-out area which can be included in the closure strip. Nominal, shear friction, temperature and shrinkage, and distribution reinforcing bars shall be bent into the closure strip.

   Rock bolts may be used to transfer connection loads deep into the existing structure, subject to the approval of your supervisor.

8. **Post-tensioning –** Post-tensioning of existing crossbeams may be utilized to increase the moment capacity and to eliminate the need for additional substructure. Generally, an existing crossbeam can be core drilled for post-tensioning if it is less than 30′ long. The amount of drift in the holes alignment may be approximately 1″ in 20′. For crossbeams longer than 30′, external post-tensioning should be considered.

   For an example of this application, refer to Contract 3846, Bellevue Transit Access – Stage 1.

B. **Connection Details –** The details on the following sheets are samples of details which have been used for widening bridges. They are informational and are not intended to restrict the designer's judgment.

1. **Box Girder Bridges –** Figures 5.5.4-1 through 5.5.4-6 show typical details for widening box girder bridges.

   Welding or mechanical butt splice are preferred over dowelling for the main reinforcement in crossbeams and columns when it can be done in the horizontal or flat position. It shall be allowed only when the bars to be welded are free from restraint at one end during the welding process.

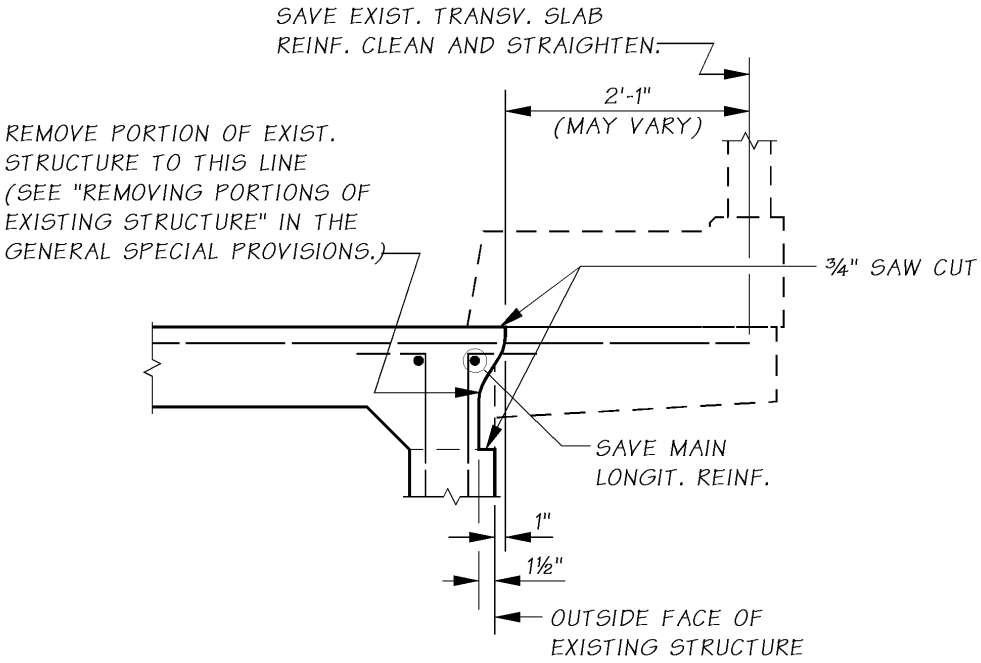

Deck Slab Removal Detail
Figure 5.5.4-1

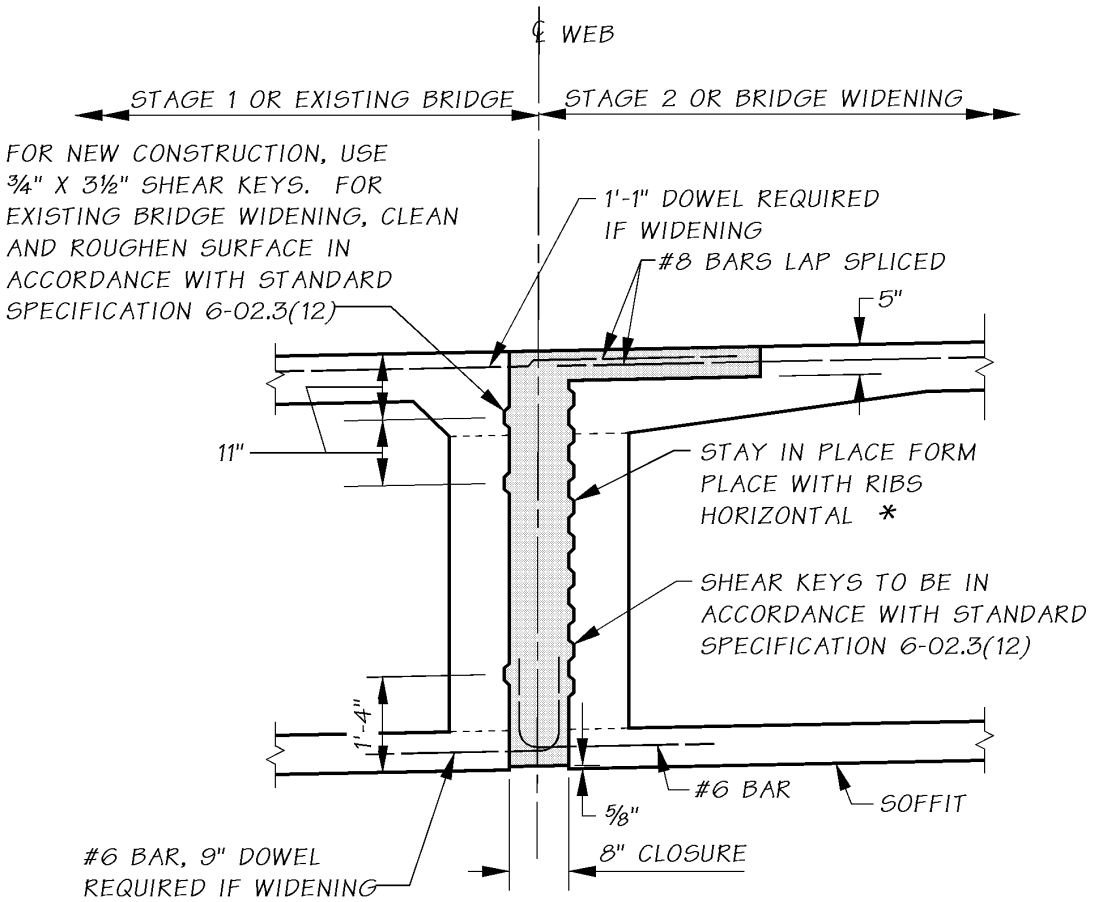

STAY IN PLACE FORM DETAIL
FOR BOX GIRDER STAGED CONSTRUCTION
OR WIDENING

* STAY IN PLACE FORMS SHALL BE SOLID GALVANIZED SHEET METAL. FORMS MUST BE VERTICALLY BRACED AS NECCESSARY TO PREVENT BOWING DURING CONCRETE PLACEMENT. TIMBER BRACING MUST BE REMOVED. IF STEEL WALES OR TIES ARE USED, THEY MAY BE LEFT IN PLACE. THE CONTRACTOR SHALL SUBMIT DESIGN CALCULATIONS IN ACCORDANCE WITH STANDARD SPECIFICATIONS 6-02.3(16) AND 6-02.3(17).

Box Girder Section in Span

Figure 5.5.4-2

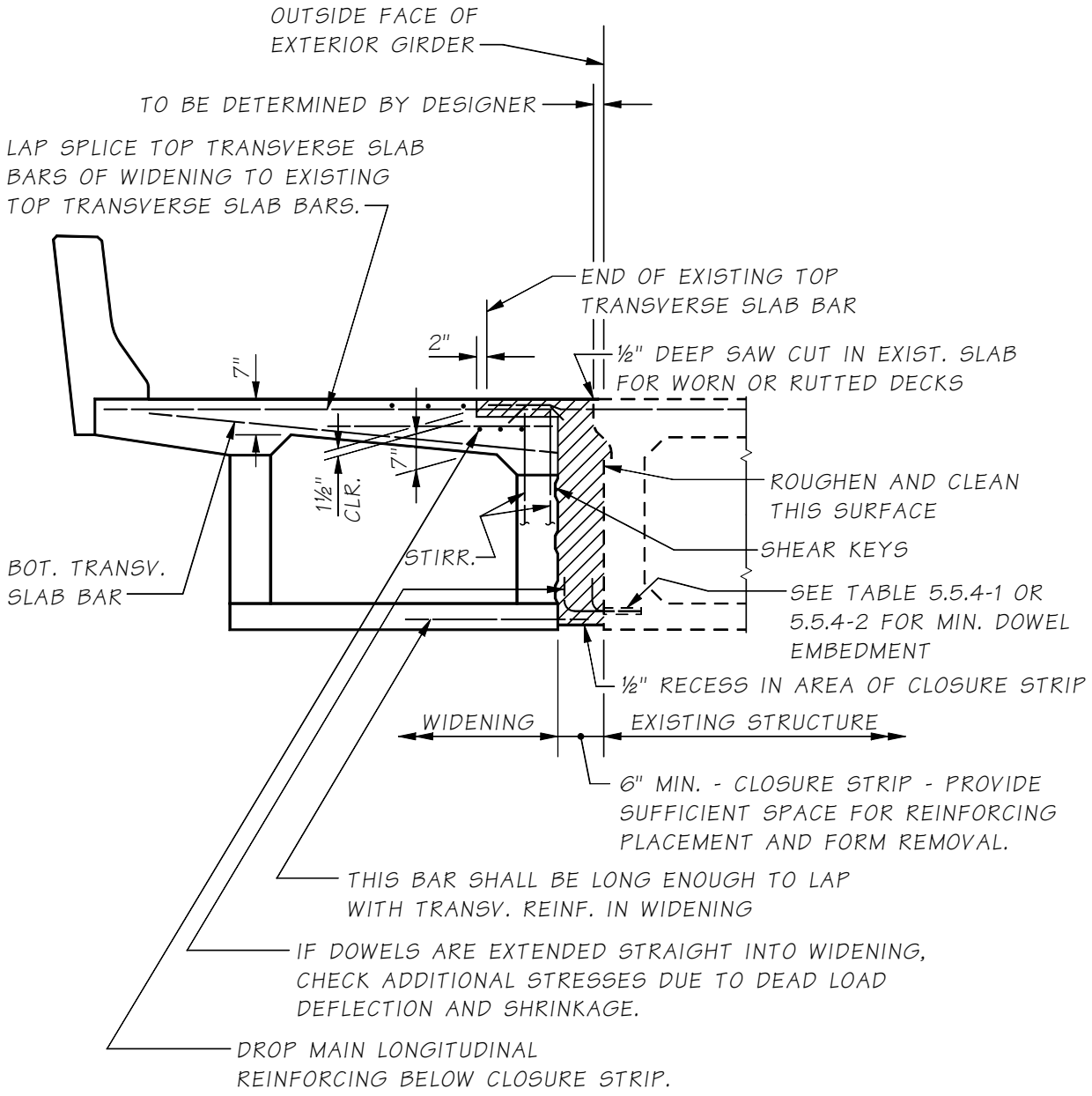

Box Girder Section Through Crossbeam

Figure 5.5.4-3

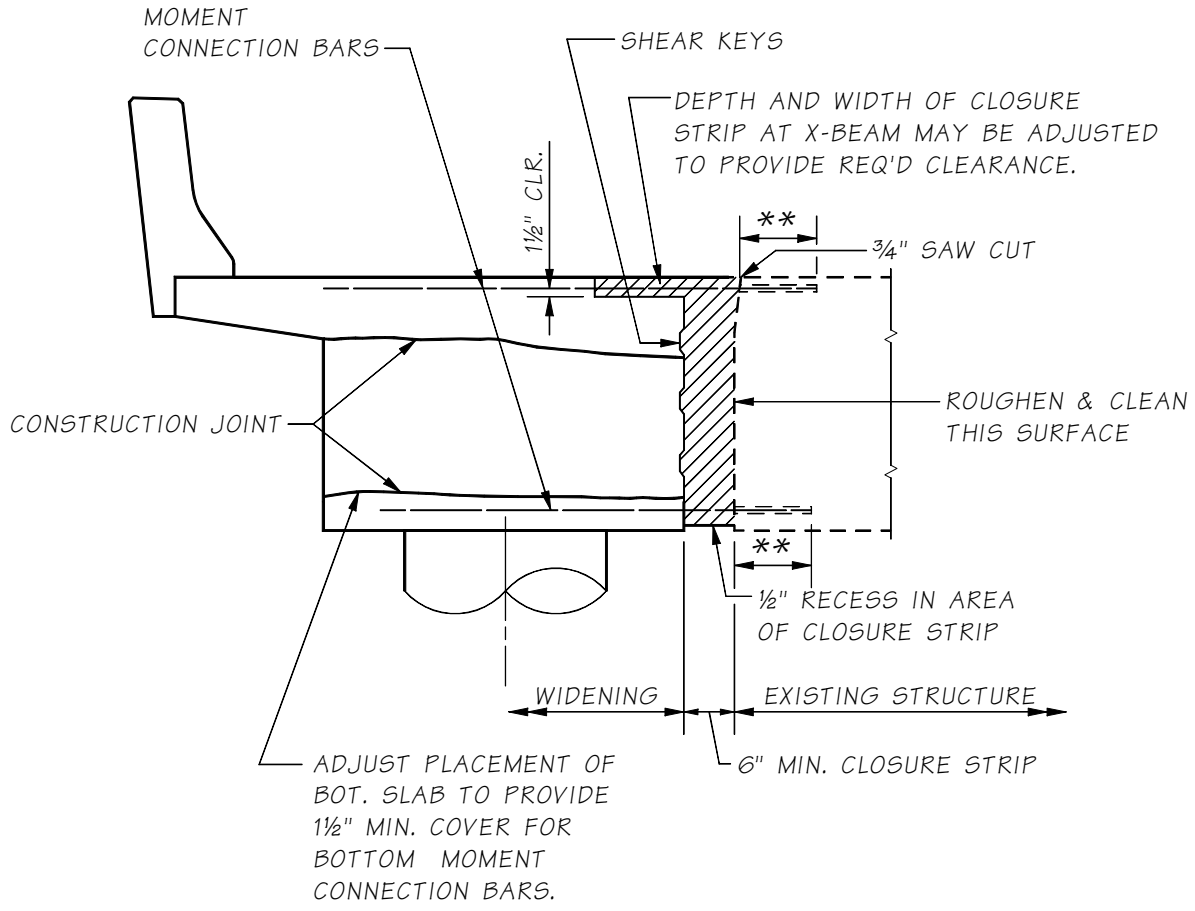

SEE "BOX GIRDER - SECTION IN SPAN" FOR ADDITIONAL DETAILS.

** SEE TABLE 5.5.4-1 OR 5.5.4-2
FOR MINIMUM DOWEL EMBEDMENT

Box Girder Section in Span at Diaphragm Alternate I
Figure 5.5.4-4

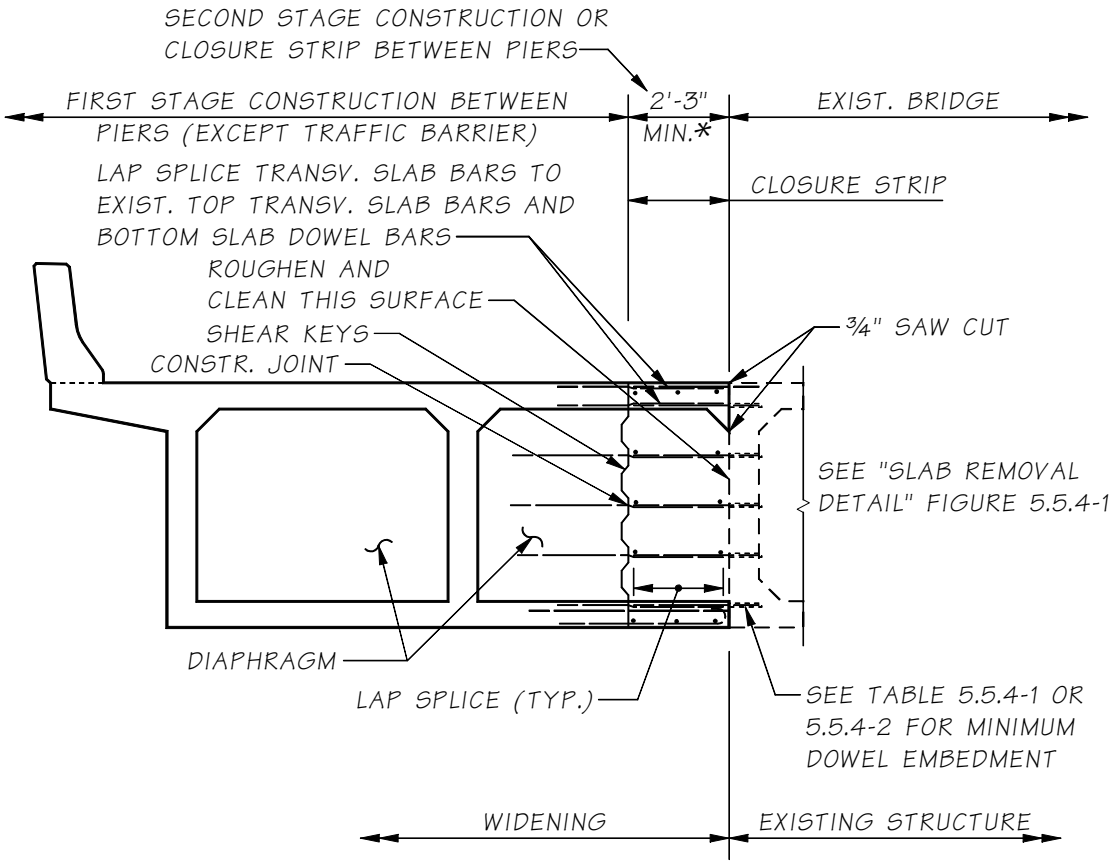

* IF LAP SPLICE EXCEEDS 2'-0", INCREASE WIDTH OF CLOSURE STRIP TO ACCOMMODATE INCREASED LAP SPLICE.

Box Girder Section in Span at Diaphragm Alternate II
Figure 5.5.4-5

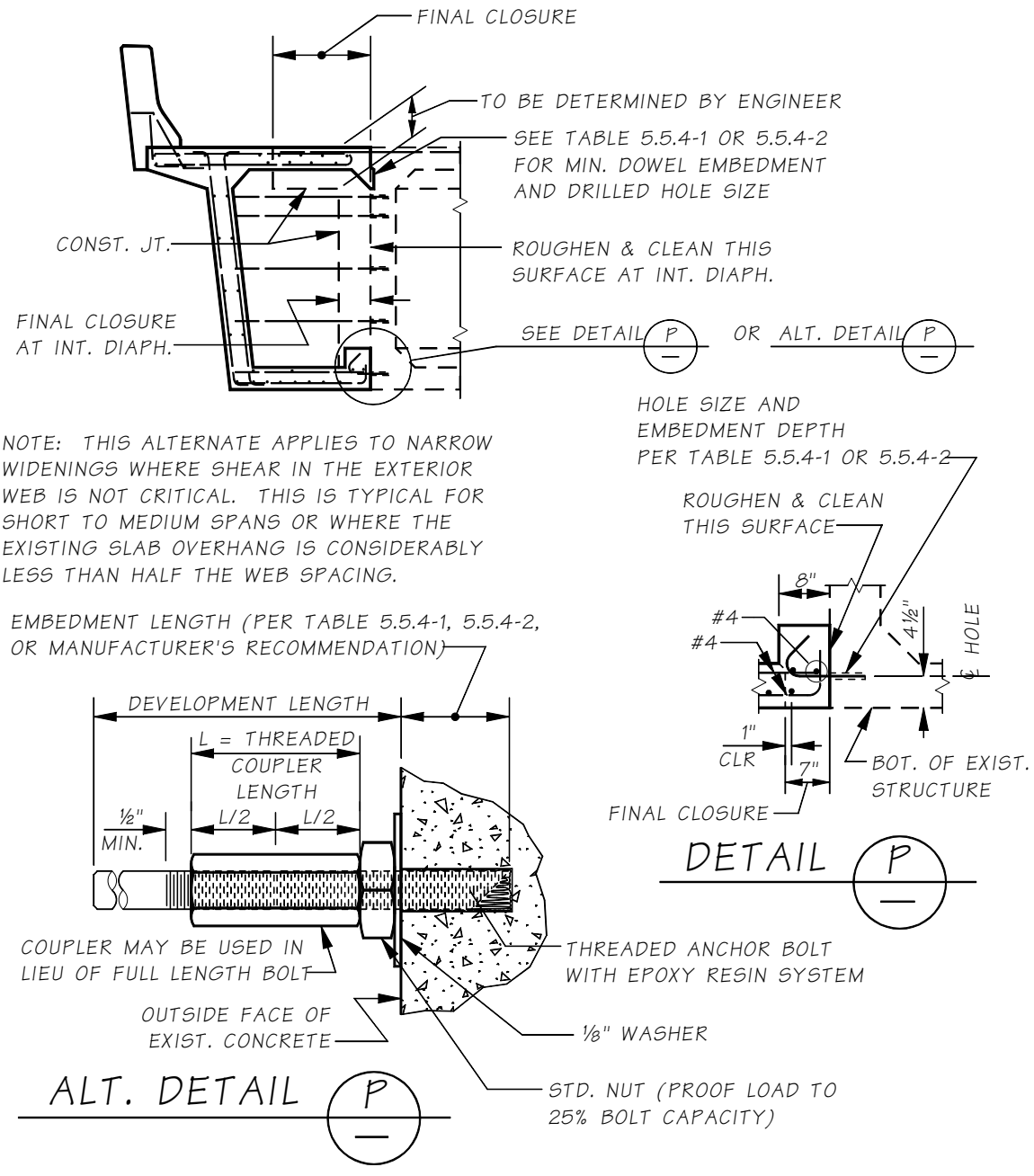

Narrow Box Girder Widening Details
Figure 5.5.4-6

2. **Flat Slab Bridges –** It is not necessary to remove any portion of the existing slab to expose the existing transverse reinforcing bars for splicing purposes, because the transverse slab reinforcement is only distribution reinforcement. The transverse slab reinforcement for the widening may be dowelled directly into the existing structure without meeting the normal splice requirements.

   For the moment connection details, see Figure 5.5.4-7.

   Note: Falsework shall be maintained under pier crossbeams until closure pour is made and cured for 10 days.

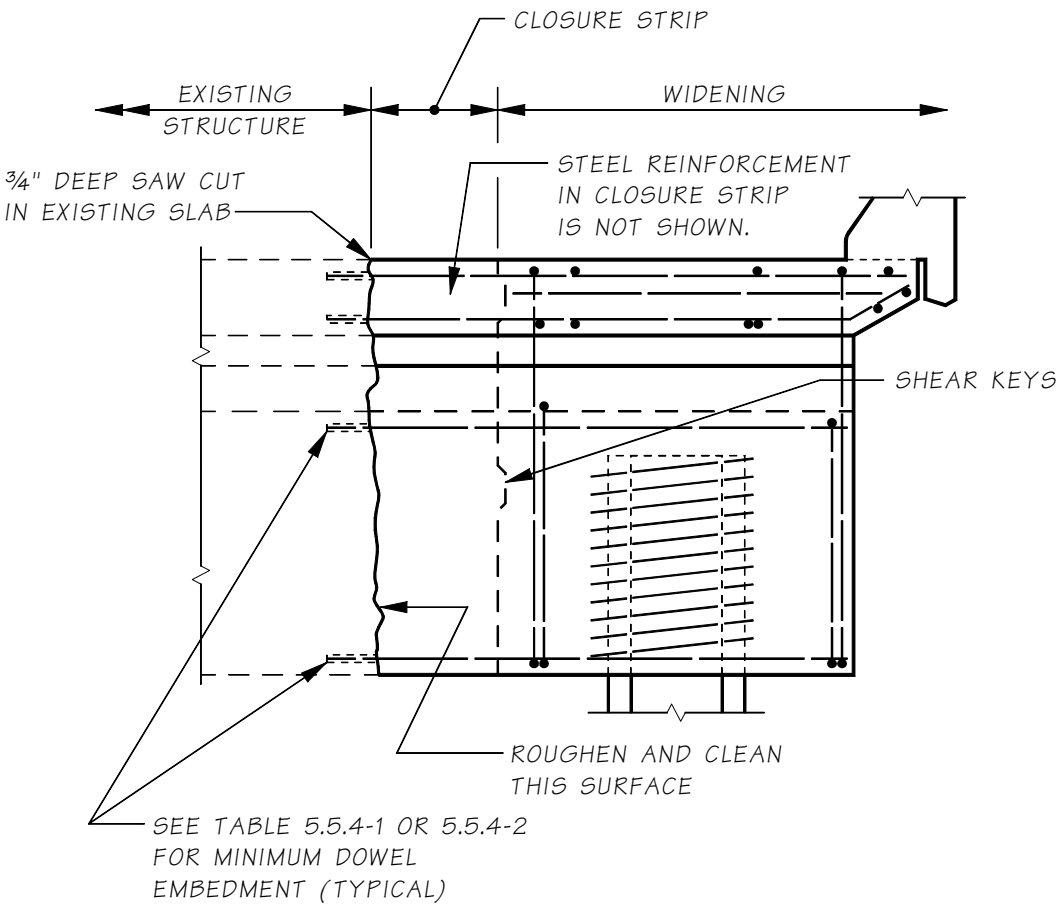

Flat Slab - Section Through Crossbeam
Figure 5.5.4-7

3. **T-Beam Bridges –** Use details similar to those for box girder bridges for crossbeam connections. See Figure 5.5.4-8 for slab connection detail.

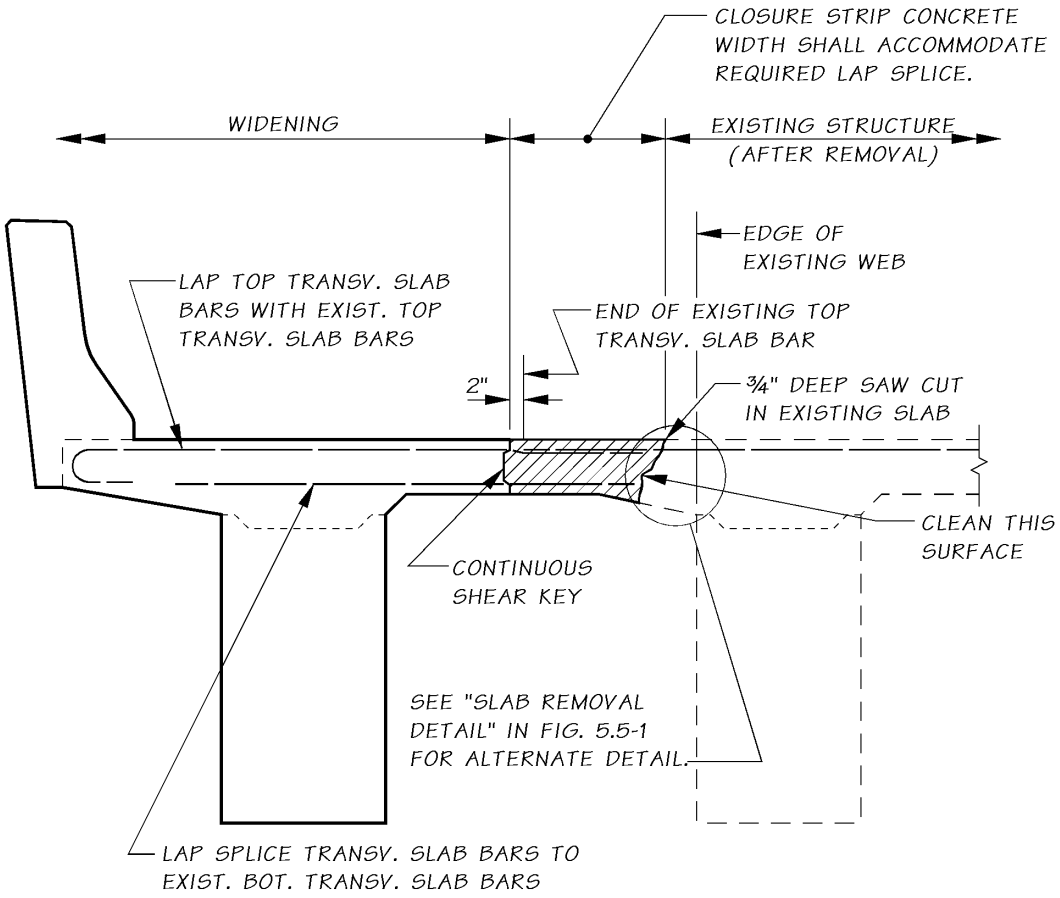

T-Beam - Section in Span
Figure 5.5.4-8

4. **Prestressed Concrete Girder Bridges –** Use details similar to those for box girder bridges for crossbeam moment connections and use details similar to those in Figure 5.5.4-9 for the slab connection detail.

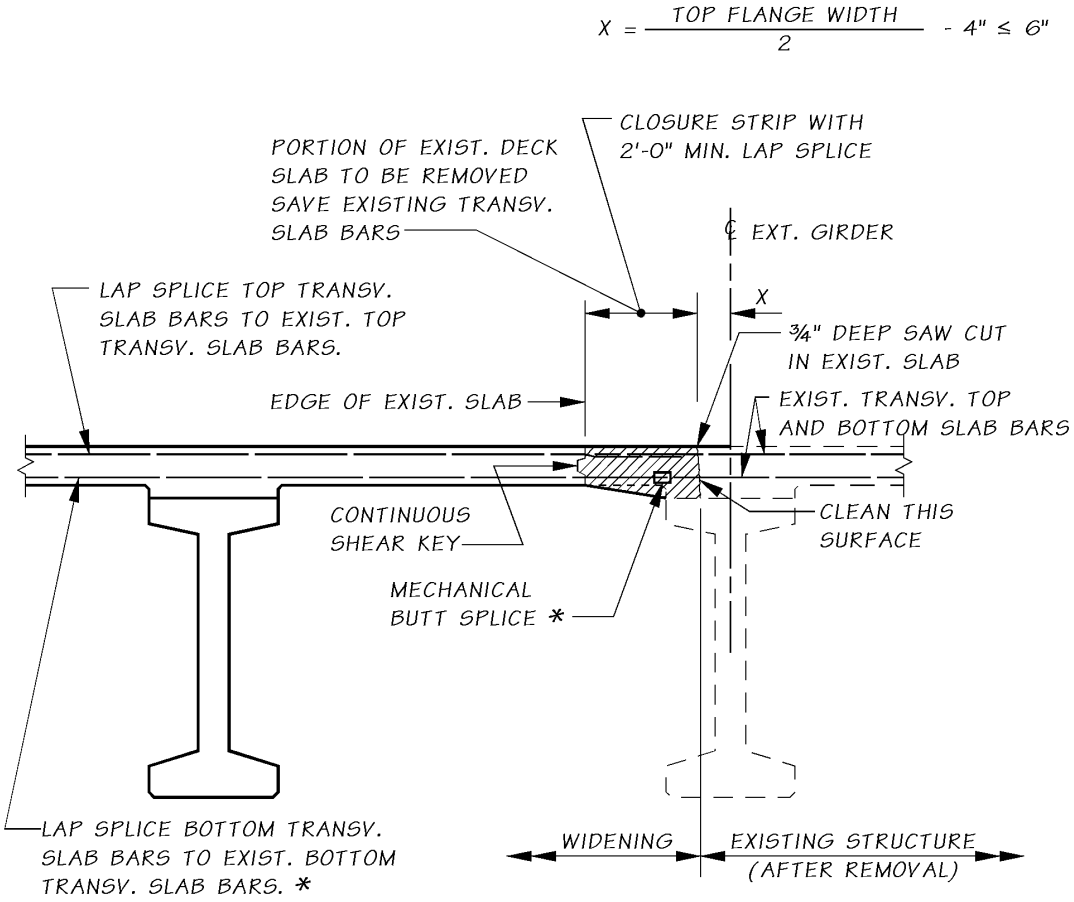

Prestressed Girder - Section in Span

Figure 5.5.4-9

5.5.5 Expansion Joints

The designer should determine if existing expansion joints can be eliminated. It will be necessary to determine what modifications to the structure are required to provide an adequate functional system when existing joints are eliminated.

For expansion joint design, see Section 9.1 Expansion Joints. Very often on widening projects it is necessary to chip out the existing concrete deck and rebuild the joint. Figures 5.5.5-1 & 2 show details for rebuilding joint openings for compression seal expansion joints.

If a widening project includes an overlay, the expansion joint may have to be raised, modified or replaced. See the Joint Specialist for plan details that are currently being used to modify or retrofit existing expansion joints.

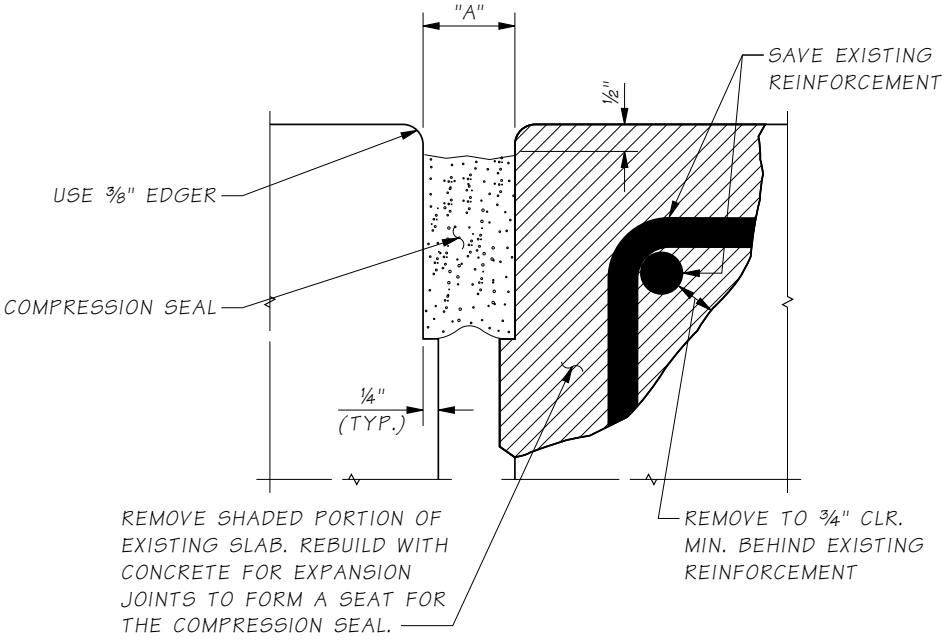

Expansion Joint Detail Shown for Compression Seal With Existing Reinforcing Steel Saved

Figure 5.5.5-1

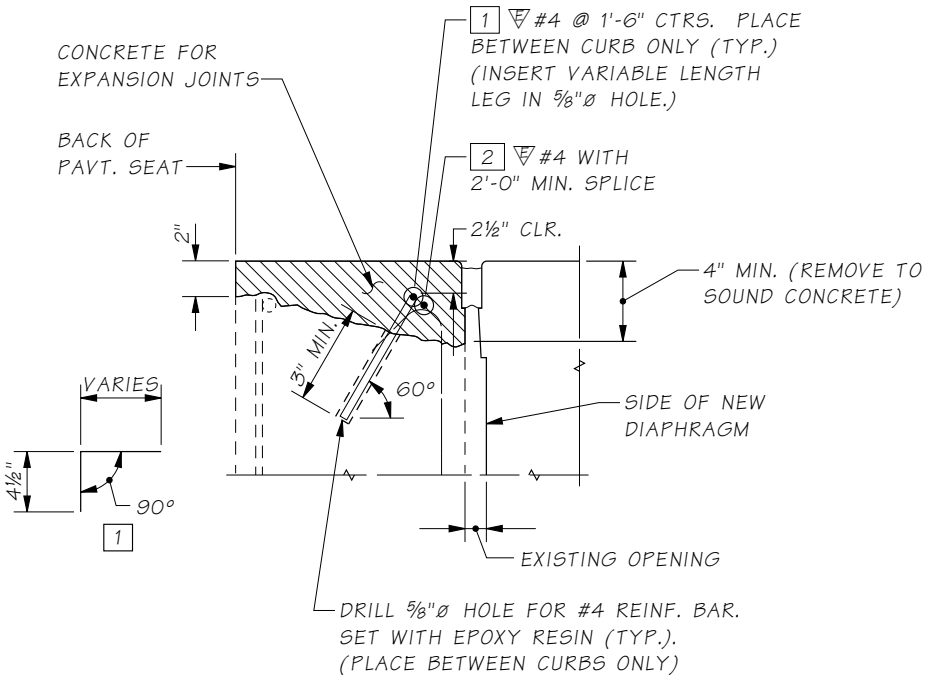

Expansion Joint Detail Shown for Compression Seal With New Reinforcing Steel Added

Figure 5.5.5-2

5.5.6 Possible Future Widening for Current Designs

For current projects that include sidewalks, provide a smooth rather than a roughened construction joint between the sidewalk and the slab.

5.5.7 Bridge Widening Falsework

For widenings which do not have additional girders, columns, crossbeams, or closure pours, falsework should be supported by the existing bridge. There should be an external support from the ground. The reason is that the ground support will not allow the widening to deflect the existing bridge when traffic is on the bridge. This will cause the "green" concrete to crack where it joins the existing bridge. The designer should contact the Bridge Construction Support Unit regarding falsework associated with widenings.

5.5.8 Existing Bridge Widenings

Appendix 5-B3 lists bridge widenings projects that may be used as design aids for the designers. These should not be construed as the only acceptable methods of widening; there is no substitute for the designer's creativity or ingenuity in solving the challenges posed by bridge widenings.

5.6 Precast Prestressed Girder Superstructures

The precast prestressed girder bridge is an economical and rapid type of bridge construction and often preferred for WSDOT bridges.

Precast sections are generally fabricated in plant or somewhere near the construction site and then erected. Precasting permits better material quality control and is often more economical than CIP concrete.

Pre-tensioning is accomplished by stressing strands to a predetermined tension and then placing concrete around the strands, while the stress is maintained. After the concrete has hardened, the strands are released and the concrete, which has become bonded to the tendon, is prestressed as a result of the strands attempting to relax to their original length. The strand stress is maintained during placing and curing of the concrete by anchoring the ends of strands to abutments that may be as much as 500′ apart. The abutments and appurtenances used in the prestressing procedure are referred to as a pre-tensioning bed or bench.

5.6.1 WSDOT Standard Girder Types

A girder type consists of a series of girder cross sections sharing a common shape. The numbers within girder series generally refer to the depth of the section in inches. Refer to Standard Specification 6-02.3(25) for a comprehensive list of Standard WSDOT girder types. Standard WSDOT girder types include:

Prestressed Concrete I Girders – Washington State Standard I Girders were adopted in the mid-1950s. The original series was graduated in 10foot increments from 30 feet to 100 feet. In 1990, revisions were made incorporating the results of the research done at Washington State University on girders without end blocks. The revisions included three major changes: a thicker web; end blocks were eliminated; and strand spacing was increased. The current Series of this type include W42G, W50G, W58G, and W74G.

Prestressed Concrete Wide Flange I Girders and Spliced Prestressed Concrete Girders – In 1999, deeper girders, commonly called “Supergirders” were added to the WSDOT standard concrete girders. These new supergirders may be pretensioned or post-tensioned. The pretensioned Series are designated as WF74G, WF83G and WF95G and the post-tensioned (spliced) Series are designated as WF74PTG, WF83PTG and WF95PTG.

In 2004 Series WF42G, WF50G, and WF58G were added to the prestressed girder standards. In 2008 Series WF66G, WF100G, and WF100PTG were added to the prestressed girder standards. In 2009 Series WF36G was added to the prestressed girder standards.

Bulb Tee Girders – In 2004 Series W32BTG, W38BTG and W62BTG were added to the prestressed girder standards.

Deck Bulb Tee Girders – This type of girder has a top flange designed to support traffic loads. They include Series W35DG, W41DG, W53DG and W65DG.

Prestressed Concrete Tub Girders – In 2004 prestressed concrete tub girders were added as standard girders.

All WSDOT prestressed girders are high performance high strength concrete girders. They generally rely on high strength concrete to be effective for the spans expected as a single piece. The approximate ranges of maximum span lengths are as shown in Table 5.6.1-1 and Appendix 5.6-A1.

Standard drawings for WSDOT prestressed girders are shown in Appendix 5.6-A and 5.9-A.

Type	Depth (in)	Area (in^2)	Iz (in^4)	Yb (in)	Wt (k/ft)	Volume to Surface Ratio (in)	Max. Span Capability (ft)	Max. Length (252 kips Limit) (ft)
W42G	42.00	373.25	76092	18.94	0.428	2.77	85	-
W50G	50.00	525.5	164958	22.81	0.602	3.12	115	-
W58G	58.00	603.5	264609	28.00	0.692	3.11	130	-
W74G	73.50	746.7	546110	38.08	0.856	2.90	150	-
WF36G	36.00	690.8	124772	17.54	0.792	3.24	105	-
WF42G	42.00	727.5	183642	20.36	0.834	3.23	120	-
WF50G	50.00	776.5	282559	24.15	0.890	3.22	140	-
WF58G	58.00	825.5	406266	27.97	0.946	3.21	155	-
WF66G	66.00	874.5	556339	31.80	1.002	3.20	165	-
WF74G	74.00	923.5	734356	35.66	1.058	3.19	175	-
WF83G	82.63	976.4	959393	39.83	1.119	3.19	190	-
WF95G	94.50	1049.1	1328995	45.60	1.202	3.18	190	-
WF100G	100.00	1082.8	1524912	48.27	1.241	3.17	205	203
W32BTG	32.00	537.0	73730	17.91	0.615	2.89	80	-
W38BTG	38.00	573.0	114108	21.11	0.657	2.90	95	-
W62BTG	62.00	717.0	384881	33.73	0.822	2.92	135	-
12″ Slab	12.00	556.0	6557	5.86	0.637	4.74	33	-
18″ Slab	18.00	653.1	21334	8.79	0.748	3.80	50	-
26″ Slab	26.00	920.1	64049	12.76	1.054	4.86	72	-
30″ Slab	30.00	1031.1	103241	14.75	1.181	4.73	83	-
36″ Slab	36.00	1379.7	205085	17.77	1.581	5.34	100	-
U54G4	54.00	1038.8	292423	20.97	1.190	3.51	130	-
U54G5	54.00	1110.8	314382	19.81	1.273	3.47	130	-
U66G4	66.00	1208.5	516677	26.45	1.385	3.51	150	-
U66G5	66.00	1280.5	554262	25.13	1.467	3.47	150	-
U78G4	78.00	1378.2	827453	32.06	1.579	3.51	170	160
U78G5	78.00	1450.2	885451	30.62	1.662	3.48	170	152
UF60G4	60.00	1207.7	483298	26.03	1.384	3.48	150	-
UF60G5	60.00	1279.7	519561	24.74	1.466	3.45	150	-
UF72G4	72.00	1377.4	787605	31.69	1.578	3.48	160	160
UF72G5	72.00	1449.4	844135	30.26	1.661	3.45	170	152
UF84G4	84.00	1547.1	1190828	37.42	1.773	3.48	180	142
UF84G5	84.00	1619.1	1272553	35.89	1.855	3.46	180	136

Section Properties of WSDOT Standard Precast Prestressed Girders
Table 5.6.1-1

5.6.2 Design Criteria

WSDOT design criteria for precast prestressed girder superstructures are given in Table 5.6.2-1.

AASHTO LRFD 5.14.1.4 "Bridges Composed of Simple Span Precast Girders Made Continuous" allows for some degree of continuity for loads applied on the bridge after the continuity diaphragms have been cast and cured. This assumption is based on the age of the girder when continuity is established, and degree of continuity at various limit states. Both degree of continuity and time of continuity diaphragm casting may result in contractual and design issues. Designing these types of bridges for the envelope of simple span and continuous spans for applicable permanent and transient loads is the approach used by WSDOT as it has yielded good results.

Design Specifications	AASHTO LRFD Specifications and WSDOT *Bridge Design Manual* M 23-50
Design Method	Precast, prestressed members shall be designed for service limit state for allowable stresses and checked for strength limit state for ultimate capacity.
Superstructure Continuity	Precast, prestressed girder superstructures shall be designed for the envelope of simple span and continuous span loadings for all permanent and transient loads. Loads applied before establishing continuity (typically before placement of continuity diaphragms) need only be applied as a simple span loading. Continuity reinforcement shall be provided at supports for loads applied after establishing continuity.
Loads and Load Factors	Service, Strength, Fatigue, and Extreme Event Limit State loads and load combinations shall be per AASHTO LRFD Specifications
Allowable Stresses	WSDOT *Bridge Design Manual* M 23-50 Table 5.2.1-1
Prestress Losses	WSDOT *Bridge Design Manual* M 23-50 Section 5.1.4
Shear Design	AASHTO LRFD 5.8 and WSDOT *Bridge Design Manual* M 23-50 Section 5.2.2.B
Shipping and Handling	WSDOT Bridge Design Manual M 23-50 Section 5.6.3
Continuous Structure Configuration	Girder types and spacing shall be identical in adjacent spans. Girder types and spacing may be changed at expansion joints.
Girder End Support Skew Angle	Girder end support skew angles shall be limited to 45° for all precast prestressed girders. Skew angles for precast slabs, deck bulb-tees and trapezoidal tubs shall be limited to 30°.
Intermediate Diaphragms	CIP concrete intermediate diaphragms shall be provided for all prestressed girder bridges (except slabs) as shown below: • ⅕ points of span for span length > 160′-0″. • ¼ points of span for 120′-0″ < span length ≤ 160′-0″. • ⅓ points of span for 80′-0″ < span length ≤ 120′-0″. • Midpoint of span for 40′-0″ < span length ≤ 80′-0″. • No diaphragm requirement for span length ≤ 40′-0″. Intermediate diaphragms shall be either partial or full depth as described in Section 5.6.4.C.4.

Design Criteria for Precast Prestressed Girders
Table 5.6.2-1

A. **Support Conditions** – The prestressed girders are assumed to be supported on rigid permanent simple supports. These supports can be either bearing seats or elastomeric pads. The design span length is the distance center to center of bearings for simple spans. For continuous spans erected on falsework (raised crossbeam), the effective point of support for girder design is assumed to be the face of the crossbeam. For continuous spans on crossbeams (dropped or semi-dropped crossbeam), the design span length is usually the distance center to center of temporary bearings.

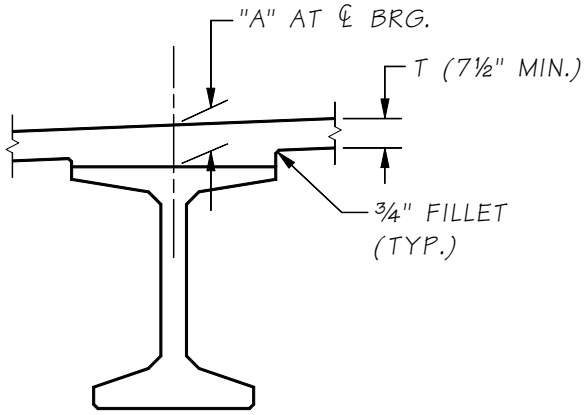

SECTION AS DETAILED

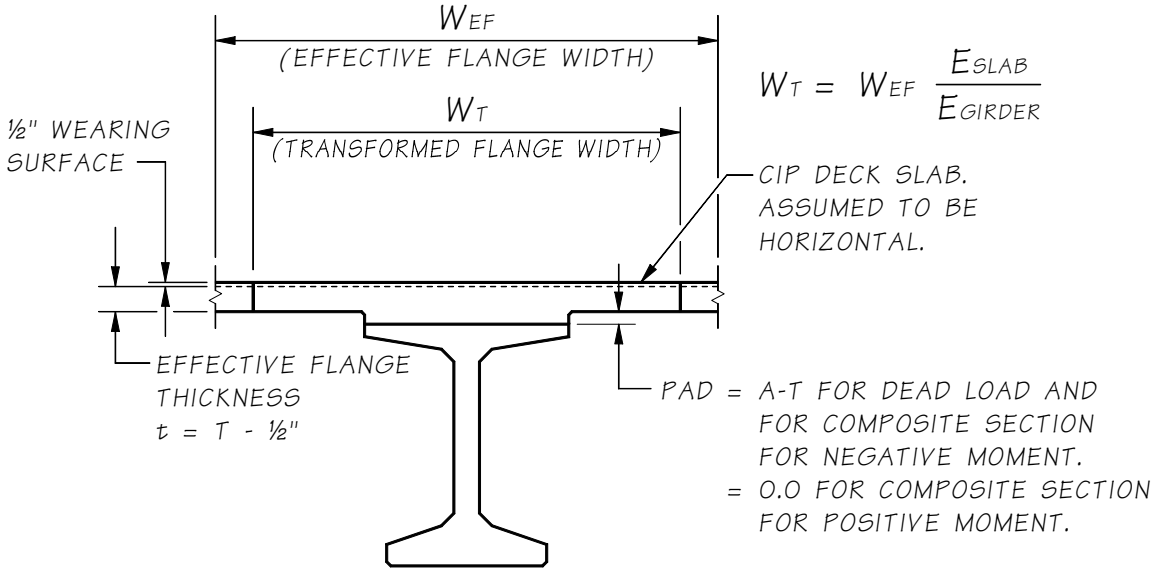

SECTION FOR COMPUTATION OF COMPOSITE SECTION PROPERTIES

Typical Section for Computation of Composite Section Properties
Figure 5.6.2-1

B. **Composite Action**

1. **General –** The sequence of construction and loading is extremely important in the design of prestressed girders. The composite section has a much larger capacity than the basic girder section but it cannot take loads until the deck slab has obtained adequate strength. Assumptions used in computing composite section properties are shown in Figure 5.6.2-1.

2. **Load Application –** The following sequence and method of applying loads is typically used in girder analysis:

   a. Girder dead load is applied to the girder section.

   b. Diaphragm dead load is applied to the girder section.

   c. Deck slab dead load is applied to the girder section.

   d. Superimposed dead loads (such as barriers, sidewalks and overlays) and live loads are applied to the composite section.

      The dead load of one traffic barrier may be divided among a maximum of three girders.

3. **Composite Section Properties –** Minimum deck slab thickness is 7½″, but may be thicker if girder spacing dictates. This slab forms the top flange of the composite girder in prestressed girder bridge construction.

   a. **Effective and Transformed Flange Width –** The effective flange width of a concrete deck slab for computing composite section properties shall be per AASHTO LRFD 4.6.2.6. The effective flange width shall be reduced by the ratio E_{slab}/E_{girder} to obtain the transformed flange width. The effective modulus of the composite section with the transformed flange width is then E_{girder}.

   b. **Effective Flange Thickness** – The effective flange thickness of a concrete deck slab for computing composite section properties shall be the deck slab thickness reduced by ½″ to account for wearing. Where a bridge will have an overlay applied prior to traffic being allowed on the bridge, the full deck slab thickness may be used as effective slab thickness.

   c. **Flange Position –** An increased dimension from top of girder to top of deck slab at centerline of bearing at centerline of girder shall be shown in the Plans. This is called the "A" dimension. It accounts for the effects of girder camber, vertical curve, deck slab cross slope, etc. See Appendix 5-B1 for method of computing.

      For purposes of calculating composite section properties for negative moments, the pad/haunch height between bottom of deck slab and top of girder shall be taken as the "A" dimension minus the flange thickness "T"at intermediate pier supports and shall be reduced by girder camber a appropriate at other locations.

      For purposes of calculating composite section properties for positive moments, the bottom of the deck slab shall be assumed to be directly on the top of the girder. This assumption may prove to be true at center of span where excess girder camber occurs.

d. **Section Dead Load –** The deck slab dead load to be applied to the girder shall be based on the full deck slab thickness. The full effective pad/haunch weight shall be added to that load over the full length of the girder. The full effective pad or haunch height is typically the "A" dimension minus the flange thickness "T", but may be higher at midspan for a crest vertical curve.

C. **Design Procedure**

1. **General –** The WSDOT Prestressed Girder Design computer program PGSuper is the preferred method for final design.

2. **Stress Conditions –** The designer shall ensure that the stress limits as described in Table 5.2.1-1 are not exceeded for prestressed girders. Each condition is the result of the summation of stresses with each load acting on its appropriate section (such as girder only or composite section).

   Dead load impact need not be considered during lifting.

   During shipping, girder stresses shall be checked using two load cases. The first load case consists of a plumb girder with dead load impact of 20% acting either up or down. The second load case consists of an inclined girder with no dead load impact. The angle of inclination shall be the equilibrium tilt angle computed for lateral stability (see BDM 5.6.3.D.6 and equation (12) in reference[12]) with a roadway superelevation of 6%.

D. **Standard Strand Locations –** Standard strand locations of typical prestressed girders are shown in Figure 5.6.2-2 and Appendices 5.6-A and 5.9-A.

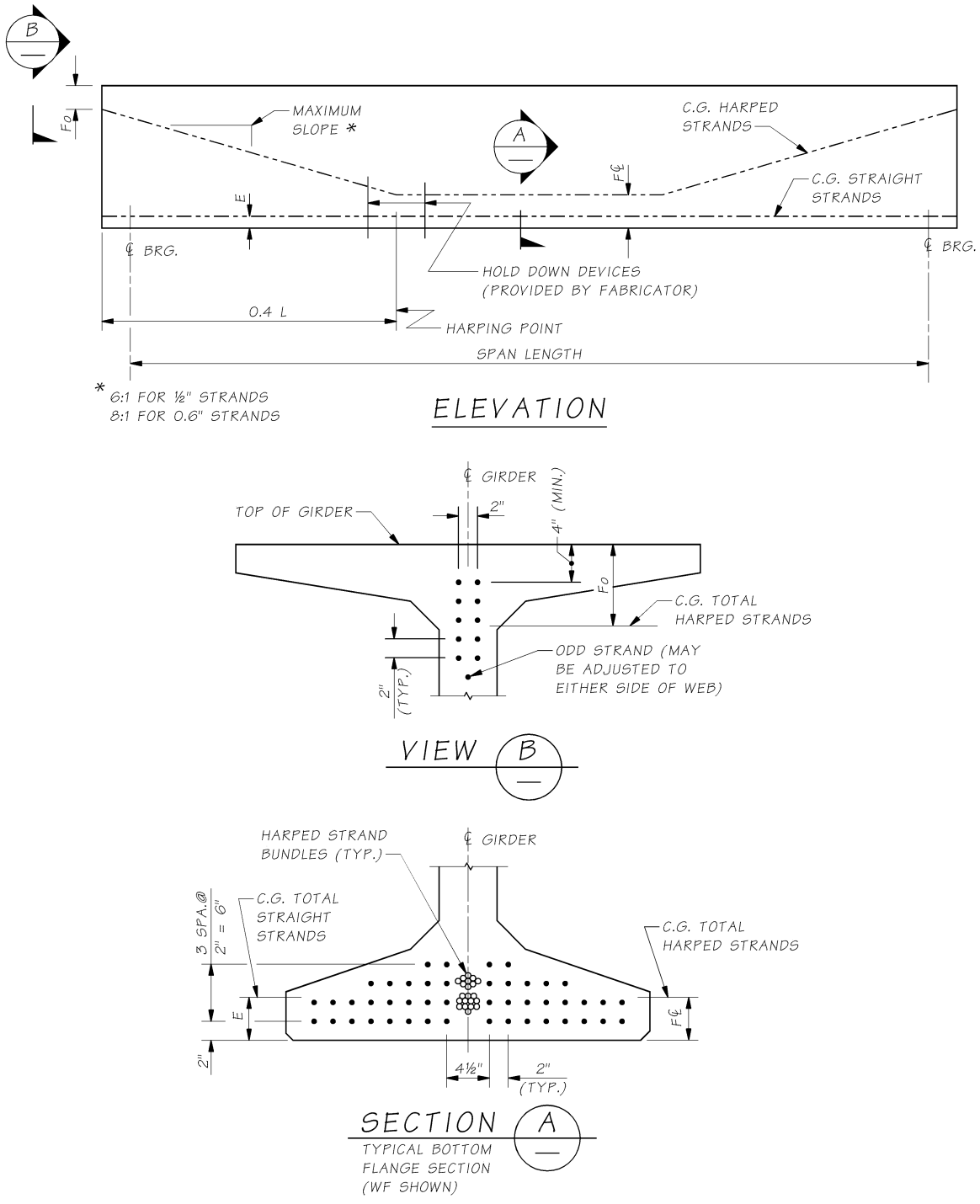

Typical Prestressed Girder Configuration
Figure 5.6.2-2

E. **Girder End Types –** There are four end types shown on the standard girder sheets. Due to the extreme depth of the WF83G, WF95G and WF100G girders, and possible end of girder tilt at the piers for profile grades, the designer will need to pay particular attention to details to assure the girders will fit and perform as intended. The four end types are shown as follows:

1. **End Type A –** End Type A as shown in Figure 5.6.2-3 is for cantilever end piers with an end diaphragm cast on the end of the girders. End Type A has a recess at the bottom of the girder near the end for an elastomeric bearing pad. See Appendix 5.6-A7-9 and 5.6-A9-12 for bearing pad details. The recess at the centerline of bearing is 0.5″ deep. This recess is to be used for profile grades up to and including 4%. The recess is to be replaced by an embedded steel plate flush with the bottom of the girder for grades over 4%. A tapered bearing plate, with stops at the edges to contain the elastomeric pad, can be welded or bolted to the embedded plate to provide a level bearing surface.

   Reinforcing bars and pretensioned strands project from the end of the girder. The designer shall assure that these bars and strands fit into the end diaphragm. Embedment of the girder end into the end diaphragm shall be a minimum of 3″ and a maximum of 6″. For girder ends where the tilt would exceed 6″ of embedment, the girder ends shall be tilted to attain a plumb surface when the girder is erected to the profile grade.

   The gap between the end diaphragm and the stem wall shall be a minimum of 1½″ or ½″ greater than required for longitudinal bridge movement.

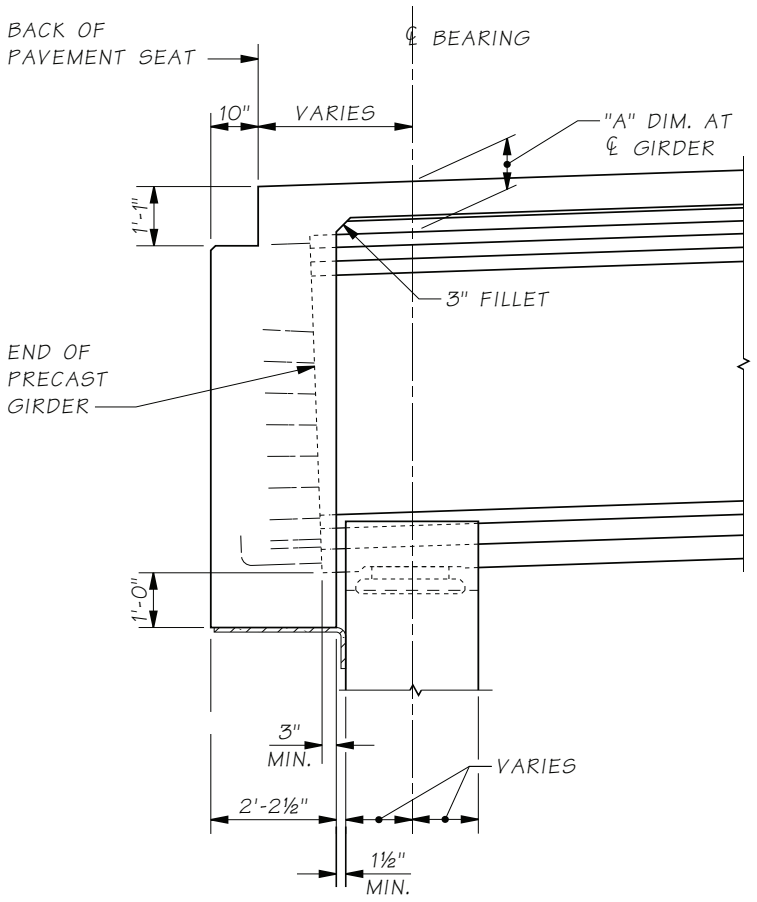

End Type A (End Diaphragm on Girder)
Figure 5.6.2-3

2. **End Type B –** End Type B as shown in Figure 5.6.2-4 is for "L" type abutments. End Type B also has a recess at the bottom of the girder for an elastomeric bearing pad. Notes regarding the bearing recess on End Type A also apply to End Type B. End Type B is the only end type that does not have reinforcing or strand projecting from the girder end.

   The centerline of the diaphragm is normal to the roadway surface. The centerline of the bearing is coincident with the centerline of the diaphragm at the top of the elastomeric pad.

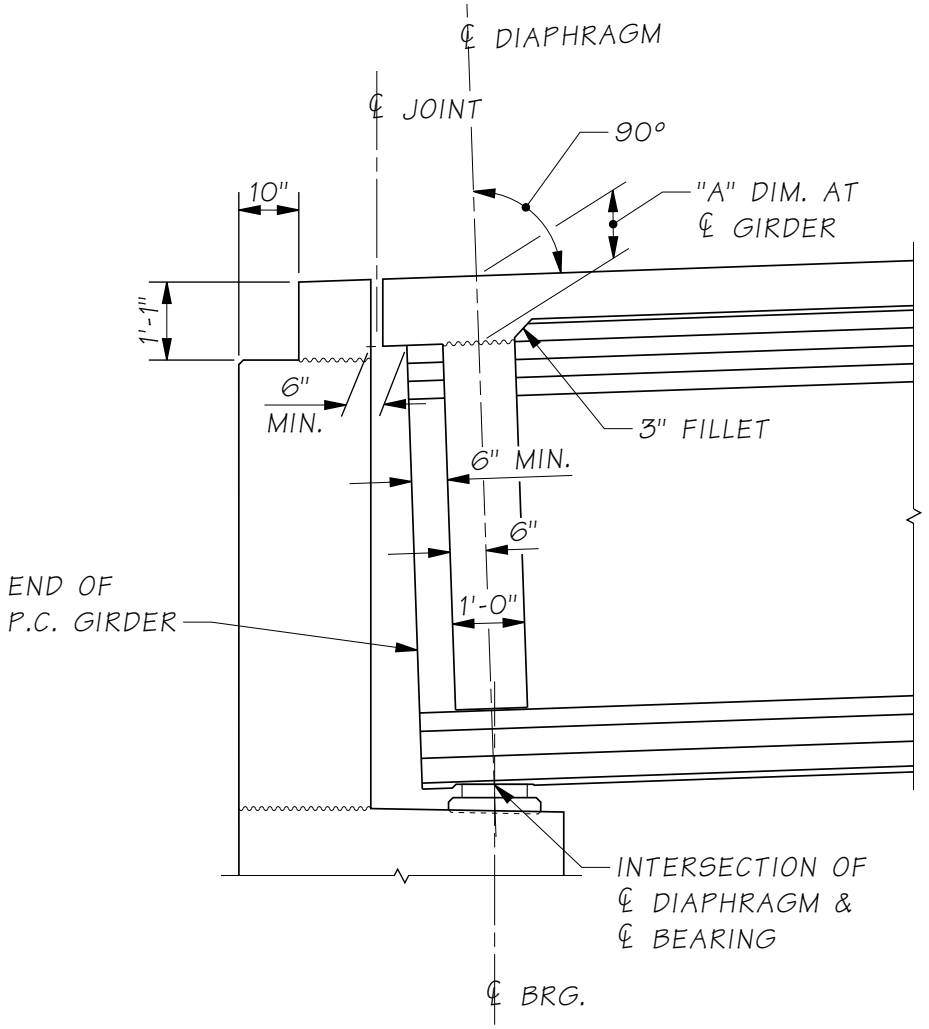

End Type B (L-Shape End Pier)
Figure 5.6.2-4

3. **End Type C –** End Type C as shown in Figure 5.6.2-5 is for continuous spans and an intermediate hinge diaphragm at an intermediate pier. There is no bearing recess and the girder is temporarily supported on oak blocks. This detail is generally used only in low seismic areas such as east of the Cascade Mountains.

   The designer shall check the edge distance and provide a dimension that prevents edge failure, or spalling, at the top corner of the supporting cross beam for load from the oak block including dead loads from girder, deck slab, and construction loads.

   For prestressed girders with intermediate hinge diaphragms, designers shall:

   a. Check size and minimum embedment in crossbeam and diaphragm for hinge bars.

   b. Check interface shear friction at girder end (see Section 5.2.2.C.2).

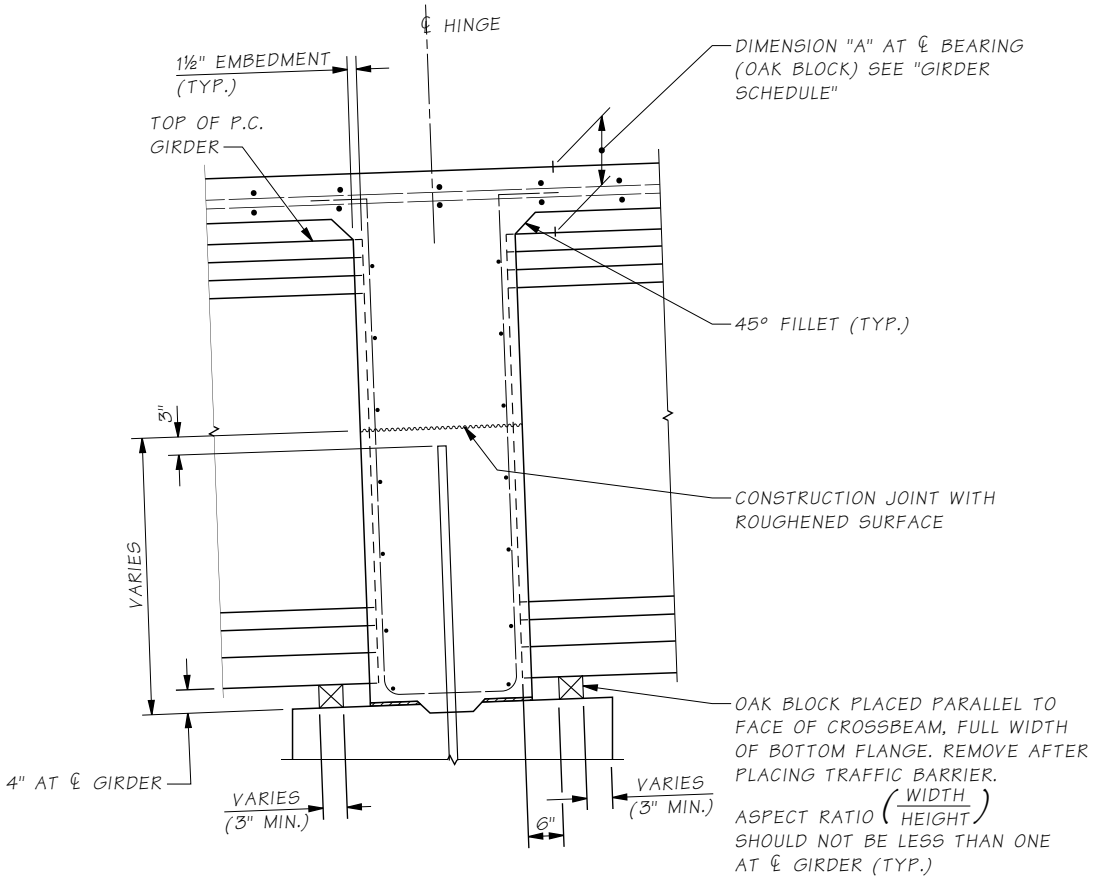

End Type C (Intermediate Hinge Diaphragm)
Figure 5.6.2-5

4. **End Type D –** End Type D as shown in Figure 5.6.2-6 is for continuous spans fully fixed to columns at intermediate piers. There is no bearing recess and the girder is temporarily supported on oak blocks.

   The designer shall check the edge distance and provide a dimension that prevents edge failure, or spalling, at the top corner of the supporting cross beam for load from the oak block including dead loads from girder, deck slab, and construction loads. The designer shall check interface shear friction at the girder end (see Section 5.2.2.C.2).

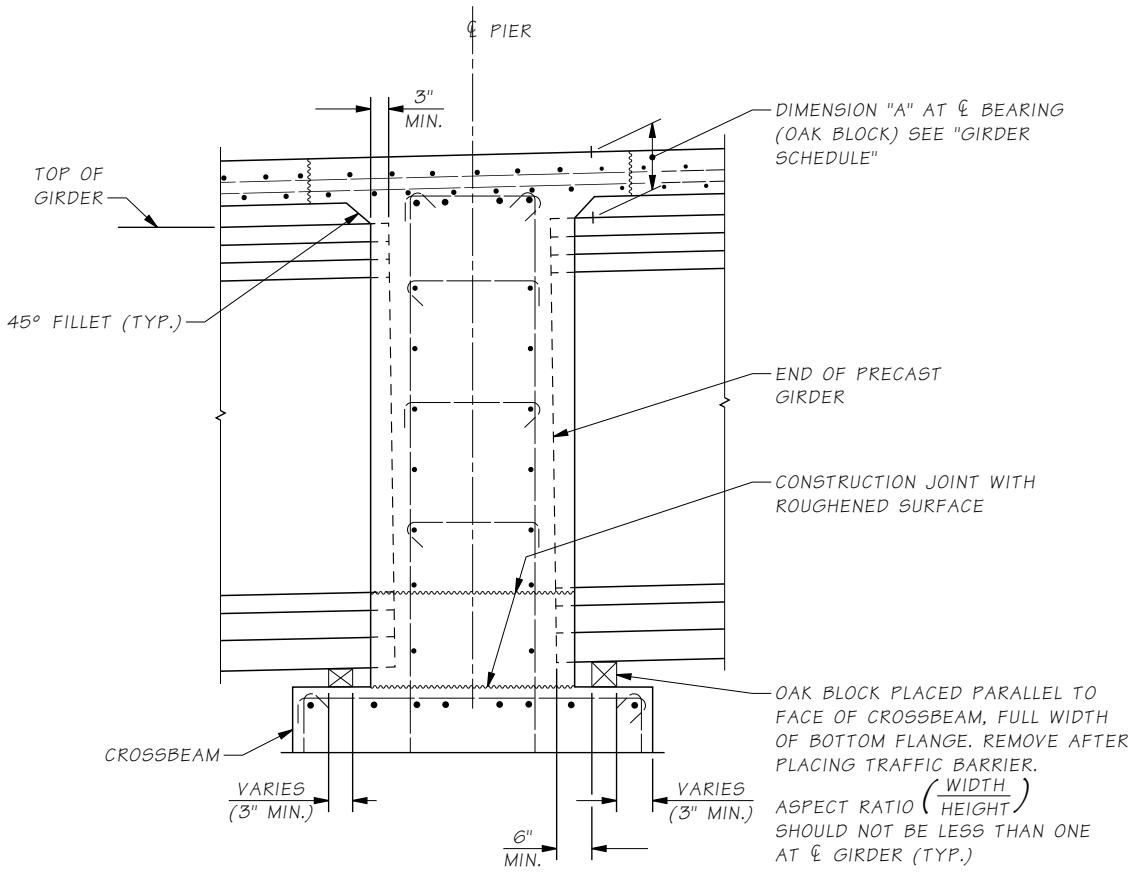

End Type D
Figure 5.6.2-6

F. **Splitting Resistance in End Regions of Prestressed Girders –** The splitting resistance of pretensioned anchorage zones shall be as described in AASHTO LRFD 5.10.10.1. For pretensioned I-girders or bulb tees, the end vertical reinforcement shall not be larger than #5 bars and spacing shall not be less than 2½″. The remaining splitting reinforcement not fitting within the h/4 zone may be placed beyond the h/4 zone at a spacing of 2½″.

G. **Confinement Reinforcement in End Regions of Prestressed Girders –** Confinement reinforcement per AASHTO LRFD 5.10.10.2 shall be provided.

H. **Girder Stirrups** – Girder stirrups shall be field bent over the top mat of reinforcement in the deck slab.

Girder stirrups may be prebent, but the extended hook shall be within the core of the slab (the inside edge of the hook shall terminate above the bottom mat deck slab bars).

5.6.3 Fabrication and Handling

A. **Shop Plans –** Fabricators of prestressed girders are required to submit shop plans which show specific details for each girder. These shop plans are checked and approved by the Project Engineer's office for conformance with the Contract Plans and specifications.

B. **Special Problems for Fabricators**

1. **Strand Tensioning –** The method selected for strand tensioning may affect the design of the girders. The strand arrangements shown in the office standard plans and included in the PGSuper computer program are satisfactory for tensioning methods used by fabricators in this state. Harped strands are normally tensioned by pulling them as straight strands to a partial tension. The strands are then deflected vertically as necessary to give the required harping angle and strand stress. In order to avoid overtensioning the harped strands by this procedure, the slope of the strands is limited to a maximum of 6:1 for 0.5″ ϕ strands and 8:1 for 0.6″ϕ strands. The straight strands are tensioned by straight jacking.

2. **Hold Down Forces –** Forces on the hold-down units are developed as the harped strands are raised. The hold-down device provided by the fabricator must be able to hold the vertical component of the harping forces. Normally a two or more hold-down unit is required. Standard commercial hold-down units have been preapproved for use with particular strand groups.

3. **Numbers of Strands –** Since the prestressing beds used by the girder fabricators can carry several girders in a line, it is desirable that girders have the same number of strands where practical. This allows several girders to be set up and cast at one time.

   For pretensioned concrete girders, the number of permanent prestressing strands (straight and harped) shall be limited to 100 total 0.6″ϕ strands.

C. **Handling of Prestressed Girders**

1. **In-Plant Handling** – The maximum weight that can be handled by precasting plants in the Pacific Northwest is 252 kips. Pretensioning lines are normally long enough so that the weight of a girder governs capacity, rather than its length. Headroom is also not generally a concern for the deeper sections.

2. **Lateral Stability during Handling** – The designer shall specify the lifting embedment locations (3′ minimum from ends - see Standard Specification 6-02.3(25)L) and the corresponding concrete strength at release that provides an adequate factor of safety for lateral stability. The calculations shall conform to methods as described in references [2, 11, 12, 13]. Recommended factors of safety of 1.0 against cracking, and 1.5 against failure shall be used.

   Lateral stability can be a concern when handling long, slender girders. Lateral bending failures are sudden, catastrophic, costly, pose a serious threat to workers and surroundings, and therefore shall be considered by designers. When the girder forms are stripped from the girder, the prestressing level is higher and the concrete strength is lower than at any other point in the life of the member. Lifting embedment/support misalignment, horizontal girder sweep and other girder imperfections can cause the girder to roll when handling, causing a component of the girder weight to be resisted by the weak axis.

   Lateral stability may be improved using the following methods:

   a. Move the lifting embedments away from the ends. This may increase the required concrete release strength, because decreasing the distance between lifting devices increases the concrete stresses at the harp point. Stresses at the support may also govern, depending on the exit location of the harped strands.

   b. Select a girder section that is relatively wide and stiff about its vertical (weak) axis.

   c. Add temporary prestressing in the top flange.

   d. Brace the girder.

   e. Raise the roll axis of the girder with a rigid yoke.

For stability analysis of prestressed girders during in-plant handling, in absence of more accurate information, the following parameters shall be used:

1. Height of pick point above top of girder = 0.0″
2. Lifting embedment transverse placement tolerance = 0.25″
3. Maximum girder sweep tolerance at midspan = 0.000521 in/in of total girder length

D. **Shipping Prestressed Girders**

1. **General –** The ability to ship girders can be influenced by a large number of variables, including mode of transportation, weight, length, height, and lateral stability. The ability to ship girders is also strongly site-dependent. For large or heavy girders, routes to the site shall be investigated during the preliminary design phase. To this end, on projects using large or heavy girders, WSDOT can place an advisory in their special provisions including shipping routes, estimated permit fees, escort vehicle requirements, Washington State Patrol requirements, and permit approval time.

2. **Mode of Transportation –** Three modes of transportation are commonly used in the industry: truck, rail, and barge. In Washington State, an overwhelming percentage of girders are transported by truck, so discussion in subsequent sections will be confined to this mode. However, on specific projects, it may be appropriate to consider rail or barge transportation.

   Standard rail cars can usually accommodate larger loads than a standard truck. Rail cars range in capacity from approximately 120 to 200 kips. However, unless the rail system runs directly from the precasting plant to the jobsite, members must be trucked for at least some of the route, and weight may be restricted by the trucking limitations.

   For a project where a large number of girders are required, barge transportation is usually the most economical. Product weights and dimensions are generally not limited by barge delivery, but by the handling equipment on either end. In most cases, if a product can be made and handled in the plant, it can be shipped by barge.

3. **Weight Limitations –** The net weight limitation with trucking equipment currently available in Washington State is approximately 190 kips, if a reasonable delivery rate (number of pieces per day) is to be maintained. Product weights of up to 252 kips can be hauled with currently available equipment at a limited rate.

   Long span prestressed concrete girders may bear increased costs due to difficulties encountered during fabrication, shipping, and erection. Generally, costs will be less if a girder can be shipped to the project site in one piece. However, providing an alternate spliced-girder design to long span one-piece pretensioned girders may reduce the cost through competitive bidding.

   When a spliced prestressed concrete girder alternative is presented in the Plans, the substructure shall be designed and detailed for the maximum force effect case only (no alternative design for substructure).

   Local carriers should be consulted on the feasibility of shipping large or heavy girders on specific projects.

4. **Support Locations –** The designer shall provide shipping support locations in the plans to ensure adequate girder stability. Shipping support locations shall be no closer than the girder depth to the ends of the girder at the girder centerline. The overhangs at the leading and trailing ends of the girders should be minimized and equal if possible. Generally, the leading end overhang should not exceed 15′ to avoid interference with trucking equipment. Local carriers should be consulted if a larger leading end overhang is required. Shipping support locations shall maintain the concrete stresses within allowable limits.

Length between shipping support locations may be governed by turning radii on the route to the jobsite. Potential problems can be circumvented by moving the support points closer together (away from the ends of the girder), or by selecting alternate routes. Up to 130′ between supports is typically acceptable for most projects.

5. **Height Limitations –** The height of a deep girder section sitting on a jeep and steerable trailer is of concern when considering overhead obstructions on the route to the jobsite. The height of the support is approximately 6′ above the roadway surface. When adding the depth of the girder, including camber, the overall height from the roadway surface to the top of concrete can rapidly approach 14′. Overhead obstructions along the route should be investigated for adequate clearance in the preliminary design phase. Obstructions without adequate clearance must be bypassed by selecting alternate routes.

   Expectations are that, in some cases, overhead clearance will not accommodate the vertical stirrup projection on deeper WSDOT standard girder sections. Alternate stirrup configurations can be used to attain adequate clearance, depending on the route from the plant to the jobsite.

6. **Lateral Stability during Shipping –** The designer shall specify support locations in the Plans that provide an adequate factor of safety for lateral stability during shipping. The calculations shall conform to methods as described in references [2, 11, 12, 13]. Recommended factors of safety of 1.0 against cracking, and 1.5 against failure (rollover of the truck) shall be used. See the discussion above on lateral stability during handling of prestressed girders for suggestions on improving stability.

   For lateral stability analysis of prestressed girders during shipping, in absence of more accurate information, the following parameters shall be used:

   a. Roll stiffness of entire truck/trailer system:

$$K_\theta = \textit{the maximum of} \begin{cases} 28{,}000 \dfrac{kip \cdot in}{rad} \\ \left(4{,}000 \dfrac{kip \cdot in}{rad \cdot axle}\right) \cdot N \end{cases}$$

   Where:
   N = required number of axles = W_g/W_a, *rounded up to the nearest integer*
   W_g = total girder weight (kip)
   W_a = 18 (kip/axle)

   b. Height of girder bottom above roadway = 72″

   c. Height of truck roll center above road = 24″

   d. Center to center distance between truck tires = 72″

   e. Maximum expected roadway superelevation = 0.06

   f. Maximum girder sweep tolerance at midspan = 0.001042 in/in of total girder length

   g. Support placement lateral tolerance = ±1″

   h. Increase girder C.G. height over roadway by 2% for camber

E. **Erection –** A variety of methods are used to erect precast concrete girders, depending on the weight, length, available crane capacity, and site access. Lifting girders during erection is not as critical as when they are stripped from the forms, particularly when the same lifting devices are used for both. However, if a separate set of erection devices are used, the girder shall be checked for stresses and lateral stability. In addition, once the girder is set in place, the free span between supports is usually increased. Wind can also pose a problem. Consequently, when girders are erected, they shall immediately be braced. The temporary bracing of the girders is the contractor's responsibility.

F. **Construction Sequence for Multi-Span Prestressed Girder Bridges –** For multi-span prestressed girder bridges, the sequence and timing of the superstructure construction has a significant impact on the performance and durability of the bridge. In order to maximize the performance and durability, the "construction sequence" details shown in Appendix 5.6-A2 shall be followed for all new WSDOT multi-span prestressed girder bridges. Particular attention shall be paid to the timing of casting the lower portion of the pier diaphragms/crossbeams (30 days minimum after girder fabrication) and the upper portion of the diaphragms/crossbeams (10 days minimum after placement of the deck slab). The requirements apply to multi-span prestressed girder bridges with monolithic and hinge diaphragms/ crossbeams.

5.6.4 Superstructure Optimization

A. **Girder Selection –** Cost of the girders is a major portion of the cost of prestressed girder bridges. Much care is therefore warranted in the selection of girders and in optimizing their position within the structure. The following general guidelines should be considered.

1. **Girder Series Selection –** All girders in a bridge shall be of the same series unless approved otherwise by the Bridge and Structures Engineer. If vertical clearance is no problem, a larger girder series, utilizing fewer girder lines, may be a desirable solution.

   Fewer girder lines may result in extra reinforcement and concrete but less forming cost. These items must also be considered.

2. **Girder Concrete Strength –** Higher girder concrete strengths should be specified where that strength can be effectively used to reduce the number of girder lines, see Section 5.1.1.A.2. When the bridge consists of a large number of spans, consideration should be given to using a more exact analysis than the usual design program in an attempt to reduce the number of girder lines. This analysis shall take into account actual live load, creep, and shrinkage stresses in the girders.

3. **Girder Spacing –** Consideration must be given to the deck slab cantilever length to determine the most economical girder spacing. This matter is discussed in Section 5.6.4.B. The deck slab cantilever length should be made a maximum if a line of girders can be saved. It is recommended that the overhang length, from edge of slab to center line of exterior girder, be less than 40% of girder spacing; then the exterior girder can use the same design as that of the interior girder. The following guidance is suggested.

   a. **Tapered Spans –** On tapered roadways, the minimum number of girder lines should be determined as if all girder spaces were to be equally flared. As many girders as possible, within the limitations of girder capacity should be placed. Deck slab thickness may have to be increased in some locations in order to accomplish this.

   b. **Curved Spans –** On curved roadways, normally all girders will be parallel to each other. It is critical that the exterior girders are positioned properly in this case, as described in Section 5.6.4.B.

   c. **Geometrically Complex Spans –** Spans which are combinations of taper and curves will require especially careful consideration in order to develop the most effective and economical girder arrangement. Where possible, girder lengths and numbers of straight and harped strands should be made the same for as many girders as possible in each span.

d. **Number of Girders in a Span –** Usually all spans will have the same number of girders. Where aesthetics of the underside of the bridge is not a factor and where a girder can be saved in a short side span, consideration should be given to using unequal numbers of girders. It should be noted that this will complicate crossbeam design by introducing torsion effects and that additional reinforcement will be required in the crossbeam.

B. **Deck Slab Cantilevers –** The exterior girder location is established by setting the dimension from centerline of the exterior girder to the adjacent curb line. For straight bridges this dimension will normally be no less than 2′-6″ for W42G, W50G, and W58G; 3′-0″ for W74G; and 3′-6″ for WF74G, WF83G, WF95G and WF100G. Some considerations which affect this are noted below.

1. **Appearance –** Normally, for best appearance, the largest deck slab overhang which is practical should be used.

2. **Economy –** Fortunately, the condition tending toward best appearance is also that which will normally give maximum economy. Larger curb distances may mean that a line of girders can be eliminated, especially when combined with higher girder concrete strengths.

3. **Deck Slab Strength –** It must be noted that for larger overhangs, the deck slab section between the exterior and the first interior girder may be critical and may require thickening.

4. **Drainage –** Where drainage for the bridge is required, water from bridge drains is normally piped across the top of the girder and dropped inside of the exterior girder line. A large deck slab cantilever length may severely affect this arrangement and it must be considered when determining exterior girder location.

5. **Bridge Curvature –** When straight prestressed girders are used to support curved roadways, the curb distance must vary. Normally, the maximum deck slab overhang at the centerline of the long span will be made approximately equal to the overhang at the piers on the inside of the curve. At the point of minimum curb distance, however, the edge of the girder top flange should be no closer than 1′-0″ from the deck slab edge. Where curvature is extreme, other types of bridges should be considered. Straight girder bridges on highly curved alignments have a poor appearance and also tend to become structurally less efficient.

C. **Diaphragm Requirements**

1. **General –** Diaphragms used with prestressed girder bridges serve two purposes. During the construction stage, the diaphragms help to provide girder stability for pouring the deck slab. During the life of the bridge, the diaphragms act as load distributing elements, and are particularly advantageous for distribution of large overloads. Diaphragms also improve the bridge resistance to over-height impact loads.

   Diaphragms for prestressed girder bridges shall be cast-in-place concrete. Standard diaphragms and diaphragm spacings are given in the office standards for prestressed girder bridges. For large girder spacings or other unusual conditions, special diaphragm designs shall be performed.

2. **Design –** Diaphragms shall be designed as transverse beam elements carrying both dead load and live load. Wheel loads for design shall be placed in positions so as to develop maximum moments and maximum shears.

3. **Geometry –** Diaphragms shall normally be oriented parallel to skew (as opposed to normal to girder centerlines). This procedure has the following advantages:

   a. The build-up of higher stresses at the obtuse corners of a skewed span is minimized. This build-up has often been ignored in design.

   b. Skewed diaphragms are connected at points of approximately equal girder deflections and thus tend to distribute load to the girders in a manner that more closely meets design assumptions.

c. The diaphragms have more capacity as tension ties and compression struts are continuous. Relatively weak inserts are only required at the exterior girder.

On curved bridges, diaphragms shall normally be placed on radial lines.

4. **Full or Partial Depth Intermediate Diaphragms –** Prestressed concrete girder bridges are often damaged by over-height loads. The damage may range from spalling and minor cracking of the bottom flange or web of the prestressed concrete girder to loss of a major portion of a girder section.

Based on research done by WSU (see reference 24), the use of intermediate diaphragms for I-shape and deck bulb tee prestressed concrete girder bridges shall be as follows:

a. Full depth intermediate diaphragms as shown in the office standard plans shall be used for bridges crossing over roads of ADT > 50000.

b. Either full depth or partial depth intermediate diaphragms as shown in the office standard plans may be used for all bridges not included in item 1.

The use of full or partial depth intermediate diaphragms in bridge widenings shall be considered on a case-by-case basis depending on the width of the widening and number of added girders.

D. **Skew Effects –** Skew in prestressed girder bridges affects structural behavior and member analysis and complicates construction.

1. **Analysis** – Normally, the effect of skew on girder analysis is ignored. It is assumed that skew has little structural effect on normal spans and normal skews. For short, wide spans and for extreme skews (values over 45°), the effect of the skew on structural action shall be investigated. All trapezoidal tub, slab, tri-beam and deck bulb-tee girders have a skew restriction of 30°.

2. **Detailing** – To minimize labor costs and to avoid stress problems in prestressed girder construction, the ends of girders for continuous spans shall normally be made skewed. Skewed ends of prestressed girders shall always match the piers they rest on at either end.

E. **Grade and Cross Slope Effects –** Large cross slopes require an increased amount of the girder pad dimension ('A' dimension) necessary to ensure that the structure can be built. This effect is especially pronounced if the bridge is on a horizontal or vertical curve. Care must be taken that deck drainage details reflect the cross slope effect.

Girder lengths shall be modified for added length along grade slope.

F. **Curve Effect and Flare Effect –** Curves and tapered roadways each tend to complicate the design of straight girders. The designer must determine what girder spacing to use for dead load and live load design and whether or not a refined analysis, that considers actual load application, is warranted. Normally, the girder spacing at centerline of span can be used for girder design, especially in view of the conservative assumptions made for the design of continuous girders.

G. **Girder Pad Reinforcement –** Girders with a large "A" dimension may require a deep pad between the top of the girder and the bottom of the deck. When the depth of the pad at the centerline of the girder exceeds 6″, reinforcement shall be provided in the pad as shown in Figure 5.6.4-1.

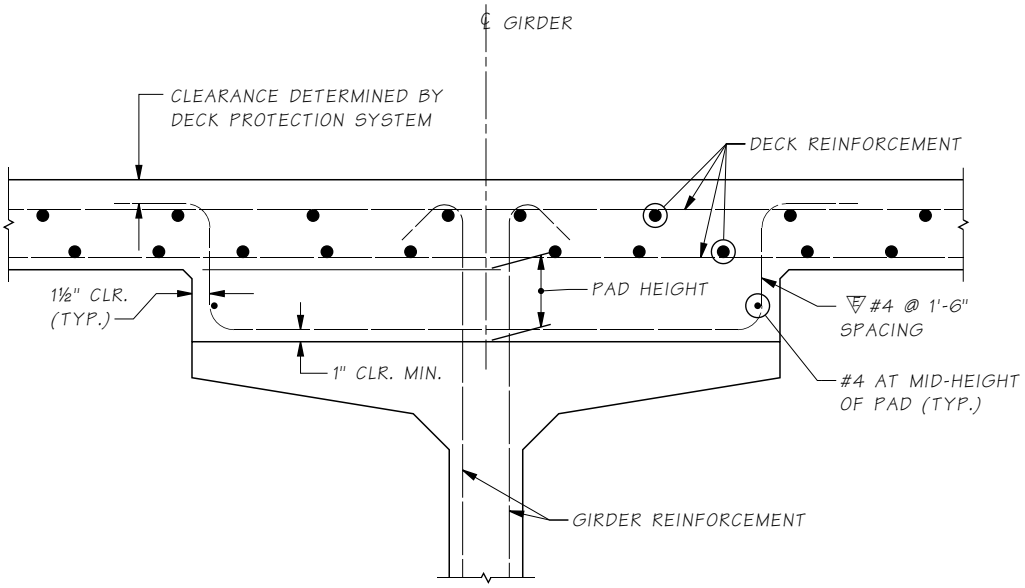

Girder Pad Reinforcement
Figure 5.6.4-1

5.6.5 Repair of Damaged Girders at Fabrication

When girders suffer defects during fabrication or damage before becoming part of a final structure, the girder repairs shall be addressed with pre-approved repair procedures from the current Annual Plant Approval document for the fabricator (see Standard Specification 6-02.3(25)A). If the repairs cannot be addressed by this document, the fabricator will initiate the Fax Resolution process from the current Annual Plant Approval document to address contract specific repairs with the Project Office and HQ Bridge Construction. Normally, no designer action is required. When evaluating repairs for unusual situations not covered, the designer must ensure that the required strength and appearance of the girder can be maintained. If stressing will occur after the repair is made, normally no test loading is required; however, such a test should be considered. See reference [14] for guidance.

5.6.6 Repair of Damaged Girders in Existing Bridges

A. **General –** This section is intended to cover repair of damaged girders on existing bridges. For repair of newly constructed girders, see Section 5.6.5. Overheight loads are a fairly common source of damage to prestressed girder bridges. The damage may range from spalling and minor cracking of the lower flange of the girder to loss of a major portion of a girder section. Occasionally, one or more strands may be broken. The damage is most often inflicted on the exterior or first interior girder.

B. **Repair Procedure –** The determination of the degree of damage to a prestressed girder is largely a matter of judgment. Where the flange area has been reduced or strands lost, calculations can aid in making this judgment decision. The following are general categories of damage and suggested repair procedures [15, 16].

   1. **Minor Damage –** If the damage is slight and concerns only spalling of small areas of the outside surface of the concrete, repair may be accomplished by replacing damaged concrete areas with concrete grout. The area where new concrete is to be applied shall first be thoroughly cleaned of loose material, dried, and then coated with epoxy.

2. **Moderate Damage –** If damage is moderate, consisting of loss of a substantial portion of the flange and possibly loss of one or more strands, a repair procedure must be developed using the following guidelines. It is probable that some prestress will have been lost in the damaged area due to reduction in section and consequent strand shortening or through loss of strands. The following repair procedure is recommended to assure that as much of the original girder strength as possible is retained:

   a. **Determine Condition –** Sketch the remaining cross section of the girder and compute its reduced section properties. Determine the stress in the damaged girder due to the remaining prestress and loads in the damaged state. If severe overstresses are found, action must be taken to restrict loads on the structure until the repair has been completed. If the strand loss is so great that AASHTO prestress requirements cannot be met with the remaining strands, consideration should be given to replacing the girder.

   b. **Restore Prestress If Needed –** If it is determined that prestress must be restored, determine the stress in the bottom fiber of the girder as originally designed due to $DL + LL + I +$ Prestress. (This will normally be about zero psi). Determine the additional load (P) that, when applied to the damaged girder in its existing condition, will result in this same stress. Take into account the reduced girder section, the effective composite section, and any reduced prestress due to strand loss. Should the damage occur outside of the middle one-third of the span length, the shear stress with the load (P) applied should also be computed. Where strands are broken, consideration should be given to coupling and jacking them to restore their prestress.

   c. **Prepare a Repair Plan –** Draw a sketch to show how the above load is to be applied and specify that the damaged area is to be thoroughly prepared, coated with epoxy, and repaired with grout equal in strength to the original concrete. Specify that this load is to remain in place until the grout has obtained sufficient strength. The effect of this load is to restore lost prestress to the strands which have been exposed.

   d. **Test Load –** Consideration should be given to testing the repaired girder with a load equivalent to $1.0DL + 1.5(LL+IM)$. The LL Live Load for test load is HL-93.

3. **Severe Damage –** Where the damage to the girder is considered to be irreparable due to loss of many strands, extreme cracking, etc., the girder may need to be replaced. This has been done several times, but involves some care in determining a proper repair sequence.

   In general, the procedure consists of cutting through the existing deck slab and diaphragms and removing the damaged girder. Adequate exposed reinforcement steel must remain to allow splicing of the new bars. The new girder and new reinforcement is placed and previously cut concrete surfaces are cleaned and coated with epoxy. New deck slab and diaphragm portions are then poured.

   It is important that the camber of the new girder be matched with that in the old girders. Excessive camber in the new girder can result in inadequate deck slab thickness. Girder camber can be controlled by prestress, curing time, or dimensional changes.

   Pouring the new deck slab and diaphragms simultaneously in order to avoid overloading the existing girders in the structure should be considered. Extra bracing of the girder at the time of deck slab pour shall be required.

   Methods of construction shall be specified in the plans that will minimize inconvenience and dangers to the public while achieving a satisfactory structural result. High early strength grouts and concretes should be considered.

4. **Repair vs. Replacement of Damaged Girder –** Several factors need to be considered when evaluating whether to repair or to replace a damaged girder. Among them are the level of concrete damage, number of broken strands, location and magnitude of web damage, permanent offset of the original girder alignment, and overall structural integrity. Other considerations include fresh damage to previously damaged girders, damage to adjacent girders, and cost of repair versus replacement. Ultimately, the evaluation hinges on whether the girder can be restored to its original capacity and whether the girder can be repaired sufficiently to carry its share of the original load.

   The following guidelines describe damaged girder conditions which require replacement:

   - **Strand Damage** – More than 25% of prestressing strands are damaged/severed. If over 25% of the strands have been severed, replacement is required. Splicing is routinely done to repair severed strands. However, there are practical limits as to the number of couplers that can be installed in the damaged area.
   - **Girder Displacements** – The bottom flange is displaced from the horizontal position more than ½″ per 10′ of girder length. If the alignment of the girder has been permanently altered by the impact, replacement is required. Examples of non-repairable girder displacement include cracks at the web/flange interface that remain open. Abrupt lateral offsets may indicate that stirrups have yielded. A girder that is permanently offset may not be restorable to its original geometric tolerance by practical and cost-effective means.
   - **Concrete Damage at Harping Point** – Concrete damage at harping point resulting in permanent loss of prestress. Extreme cracking or major loss of concrete near the harping point may indicate a change in strand geometry and loss in prestress force. Such loss of prestress force in the existing damaged girder cannot be restored by practical and costeffective means, and requires girder replacement.
   - **Concrete Damage at Girder Ends** – Severe concrete damage at girder ends resulting in permanent loss of prestress or loss of shear capacity. Extreme cracking or major loss of concrete near the end of a girder may indicate unbonding of strands and loss in prestress force or a loss of shear capacity. Such loss of prestress force or shear capacity in the existing damaged girder cannot be restored by practical and cost-effective means, and requires girder replacement.

   There are other situations as listed below which do not automatically trigger replacement, but require further consideration and analysis.

   - **Adjacent Girders** – Capacity of adjacent undamaged girders. Consideration must be given as to whether dead load from the damaged girder has been shed to the adjacent girders and whether the adjacent girders can accommodate the additional load.
   - **Previously Damaged Girders** – Damage to a previously damaged girder. An impact to a girder that has been previously repaired may not be able to be restored to sufficient capacity.
   - **Cost** – Cost of repair versus replacement. Replacement may be warranted if the cost of repair reaches 70% of the replacement project cost.

C. **Miscellaneous References –** The following girder replacement contracts and similar jobs should be used for guidance:

C-9593 Columbia Center IC Br. 12/432 Repair (Simple Span)
C-9593 16th Avenue IC Br. 12/344 Repair (Continuous Span)
C-9446 Mae Valley U Xing (Simple Span)
KD-2488 13th Street O Xing 5/220 (Northwest Region)
KD-2488 SR 506 U Xing 506/108 (Northwest Region)
SR 12 U Xing 12/118 (Northwest Region)
C-5328 Bridge 5/411 NCD (Continuous Span)
KD-2976 Chamber of Commerce Way Bridge 5/227
KD-20080 Golden Givens Road Bridge 512/10
KD-2154 Anderson Hill Road Bridge 3/130W

5.6.7 Short Span Precast Prestressed Bridges

A. **General –** The term "deck girder" refers to a girder whose top flange or surface is the driving surface, with or without an overlay. They include slab, double-tee, ribbed and deck bulb-tee girders.

Deck girders without a composite CIP deck slab shall have a minimum concrete cover of 2″ over the top mat. The top mat of reinforcement in the deck (top flange) shall be epoxy-coated.

B. **Slab Girders –** Slab girder lengths shall be limited to the girder depth divided by 0.03 due to unexpected variations from traditional beam camber calculations. The following are maximum girder lengths using this criteria:

12″ deep slab = maximum girder length of 33′
18″ deep slab = maximum girder length of 50′
26″ deep slab = maximum girder length of 72′
30″ deep slab = maximum girder length of 83′
36″ deep slab = maximum girder length of 100′

The standard width of slab girders is shown in the girder standard plans. The width of slab girders can be increased but generally should not exceed 8′-0″.

A minimum 5″ composite CIP deck slab shall be placed over slab girders. The CIP concrete deck slab shall at a minimum be Class 4000D concrete with one layer of #4 epoxy coated reinforcement in both the transverse and longitudinal directions spaced at 1′-0″ maximum. Welded ties are still required.

The AASHTO LRFD 2.5.2.6.2 deflection criteria shall be satisfied for slab girders.

Temporary top strands are not required for the lateral stability of slab girders. Temporary top strands can be used if required to control concrete stresses due to plant handling, shipping and erection. These strands shall be bonded for 10′ at both ends of the girder, and unbonded for the remainder of the girder length. Temporary strands shall be cut prior to placing the CIP deck slab.

The specified design compressive strength ($f'c$) of slab girders should be kept less than or equal to 8 ksi to allow more fabricators to bid.

C. **Double-Tee and Ribbed Deck Girders –** Double-tee and ribbed deck girders shall be limited to widening existing similar structures. An HMA overlay with membrane shall be specified. These sections are capable of spanning up to 60′.

D. **Deck Bulb-Tee Girders –** Deck bulb-tee girders have standard girder depths of 35, 41, 53, and 65 inches. The top flange/deck may vary from 4-feet 1-inch to 6-feet wide. They are capable of spanning up to 135 feet.

Deck bulb-tee girders with an HMA overlay shall be limited to pedestrian bridges and to widening existing similar structures with an HMA overlay. A waterproofing membrane shall be provided. This is not a preferred option for WSDOT bridges, but is often used by local agencies.

Deck bulb-tee girders may be used with a minimum 5″ composite CIP deck slab as described above for slab girders. Welded ties and grouted keys at flange edges shall still be provided.

Thin flange deck bulb-tee girders (3″ top flange instead of 6″) with a minimum 7½″ composite CIP deck slab and two mats of epoxy-coated reinforcement are an alternative to deck bulb-tee girders. Thin flange deck bulb tee sections can be up to 8 feet wide. This is a preferred option for WSDOT bridges. It does not require welded ties and grouted keys.

5.6.8 Precast Prestressed Concrete Tub Girders

A. **General –** Precast prestressed concrete tub girders (U and UF sections) are an option for moderate bridge spans.

The standard tub girders (U sections) have 4′-0″ or 5′-0″ bottom flange widths and are 4′-6″, 5′-6″ or 6′-6″ deep. A 6″ deep top flange can be added to tub girders (UF sections) to improve structural efficiency and to accommodate placement of stay-in-place precast deck panels.

B. **Curved Precast Tub Girders –** Curved precast tub girders may be considered for bridges with moderate horizontal radiuses. Precast I-girders may not be curved.

Curved precast tub girders can either be designed in one piece or in segments depending on span configurations and shipping limitations. Curved precast tub girders are post-tensioned at the fabrication plant and shipped to the jobsite. Additional jobsite post-tensioning may be required if segment assembly is necessary, or if continuity over intermediate piers is desired. Closure joints at segment splices shall meet the requirements of section 5.9.4.C.

The following limitations shall be considered for curved precast tub girders:

1. The overall width of precast curved segments for shipment shall not exceed 16 feet.
2. The location of the shipping supports shall be carefully studied so that the precast segment is stable during shipping. The difference in dead load reactions of the shipping supports within the same axle shall not exceed 5%.
3. The maximum shipping weight of precast segments may be different depending on the size of precast segments. The shipping weight shall meet the legal axle load limits set by the RCW, but in no case shall the maximum shipping weight exceed 275 kips.
4. The minimum web thickness shall be 10″. Other cross-sectional dimensions of WSDOT standard tub girders are applicable to curved precast tub girders.
5. Effects of curved tendons shall be considered per Section 5.8.1.F.
6. The clear spacing between ducts shall be 2″ min. The duct diameter shall not exceed 4½″.

5.6.9 Prestressed Girder Checking Requirement

A. Shear reinforcing size and spacing shall be determined by the designer.

B. Determine lifting location and required concrete strength at release to provide adequate stability during handling. Generally temporary strands provide additional stability for lifting and transportation, and reduce the camber. Less camber allows for less "A" dimension and concrete pad dead weight on the structure. Temporary strands are cut after the girders are erected and braced and before the intermediate diaphragms are cast.

C. Due to the extreme depth of the WF83G, WF95G and WF100G girders, and possible tilt at the piers for profile grades, the designer will need to pay particular attention to details to assure the girders will fit and perform as intended.

D. Check edge distance of supporting cross beam.

5.6.10 Review of Shop Plans for Pretensioned Girders

Pretensioning shop drawings shall be reviewed by the designer. Shop drawings, after review by the designer, shall be stamped with the official seal and returned to the bridge construction support office. The review must include:

A. All prestressing strands shall be of ½″ or 0.6″ diameter grade 270 low relaxation uncoated strands.

B. Number of strands per girder.

C. Jacking stresses of strands shall not exceed $0.75 f_{pu}$.

D. Strand placement patterns and harping points.

E. Temporary strand pattern, bonded length, location and size of blockouts for cutting strands.

F. Procedure for cutting temporary strands and patching the blockouts shall be specified.

G. Number and length of extended strands and rebars at girder ends.

H. Locations of holes and shear keys for intermediate and end diaphragms.

I. Location and size of bearing recesses.

J. Saw tooth at girder ends.

K. Location and size of lifting loops or lifting bars.

L. All horizontal and vertical reinforcement.

M. Girder length and end skew.

5.7 Deck Slabs

Concrete deck slabs shall be designed using the Traditional Design of AASHTO LRFD 9.7.3 as modified by this section.

The following information is intended to provide guidance for deck slab thickness and transverse and longitudinal reinforcement of deck slabs. Information on deck protection systems is given in Section 5.7.4.

5.7.1 Deck Slab Requirements

A. **Minimum Deck Slab Thickness** – The minimum deck slab thickness (including 0.5″ wearing surface) shall be 7.5″ for concrete bridges, 8.0″ for steel girder bridges, and 8.5″ for concrete girder bridges with SIP deck panels. This minimum deck slab thickness may be reduced by 0.5″ for bridges with Deck Protection Systems 2, 3 and 5.

The minimum CIP deck slab thickness for precast slab girders is 5″.

Minimum slab thicknesses are established in order to ensure that overloads will not result in premature deck slab cracking.

The minimum clearance between top and bottom reinforcing mats shall be 1″.

B. **Computation of Deck Slab Strength** – The design thickness for usual deck slabs are shown in Figures 5.7.1-1 & 2.

The thickness of the deck slab and reinforcement in the area of the cantilever may be governed by traffic barrier loading. Wheel loads plus dead load shall be resisted by the sections shown in Figure 5.7.1-2.

Design of the cantilever is normally based on the expected depth of deck slab at centerline of girder span. This is usually less than the dimensions at the girder ends.

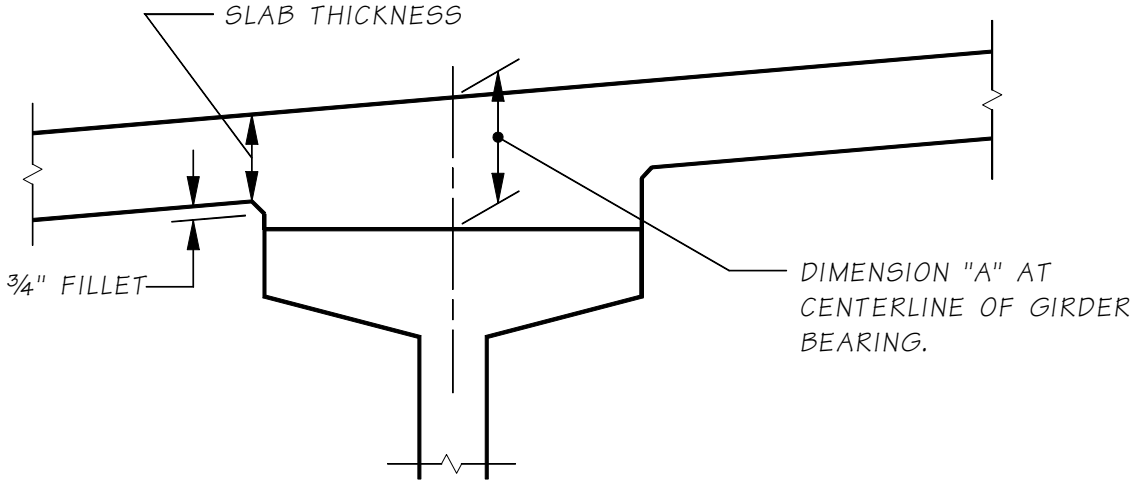

Depths for Deck Slab Design at Interior Girder
Figure 5.7.1-1

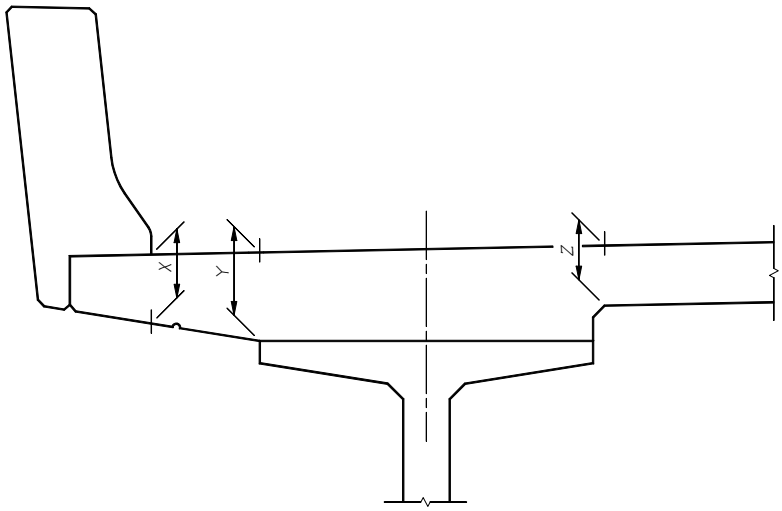

Depths for Deck Slab Design at Overhang
Figure 5.7.1-2

C. **Computation of "A" Dimension** – The distance from the top of the deck slab to the top of the girder at centerline bearing at centerline of girder is represented by the "A" Dimension. It is calculated in accordance with the guidance of Appendix 5-B1. This ensures that adequate allowance will be made for excess camber, transverse deck slopes, vertical and horizontal curvatures. Where temporary prestress strands at top of girder are used to control the girder stresses due to shipping and handling, the "A" dimension must be adjusted accordingly.

The note in the left margin of the layout sheet shall read: "A" Dimension = X" (not for design).

5.7.2 Deck Slab Reinforcement

A. **Transverse Reinforcement** – The size and spacing of transverse reinforcement may be governed by interior deck slab span design and cantilever design. Where cantilever design governs, short hooked bars may be added at the deck slab edge to increase the reinforcement available in that area. Top transverse reinforcement is always hooked at the deck slab edge unless a traffic barrier is not used. Top transverse reinforcement is preferably spliced at some point between girders in order to allow the clearance of the hooks to the deck slab edge forms to be properly adjusted in the field. Usually, the deck slab edge hooks will need to be tilted in order to place them. On larger bars, the clearance for the longitudinal bar through the hooks shall be checked. Appendices 5.3-A5 through 5.3-A8 can be used to aid in selection of bar size and spacing.

For skewed spans, the transverse bars are placed normal to bridge centerline and the areas near the expansion joints and bridge ends are reinforced by partial length bars. For raised crossbeam bridges, the bottom transverse deck slab reinforcement is discontinued at the crossbeam.

The spacing of bars over the crossbeam must be detailed to be large enough to allow concrete to be poured into the crossbeam. For typical requirements, see Section 5.3.3.D.

For deck slabs with a crowned roadway, the bottom surface and rebar shall be flat, as shown in Figure 5.7.2-1.

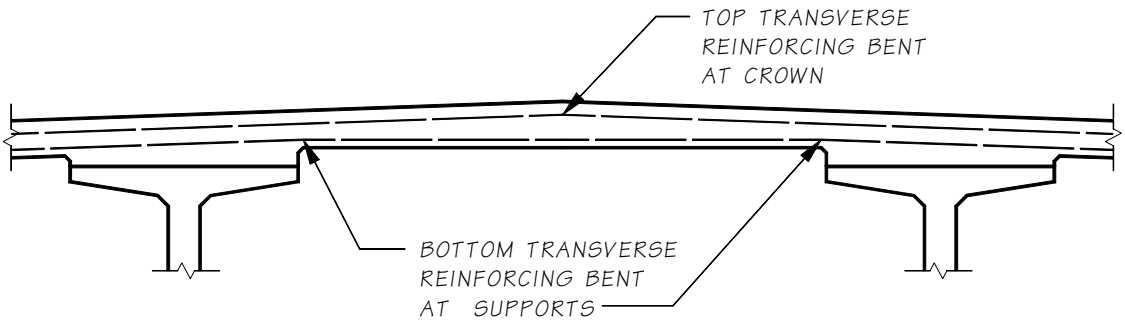

Bottom of Deck Slab at Crown Point
Figure 5.7.2-1

B. **Longitudinal Reinforcement** – This section discusses reinforcement requirements for resistance of longitudinal moments in continuous multi-span precast girder bridges and is limited to reinforcement in the deck slab since capacity for resisting positive moment is provided by the girder reinforcement.

1. **Simple Spans** – For simple span bridges, longitudinal deck slab reinforcement is not required to resist negative moments and therefore the reinforcement requirements are nominal. Figure 5.7.2-2 defines longitudinal reinforcement requirements for these slabs. The bottom longitudinal reinforcement is defined by AASHTO LRFD 9.7.3.2 requirements for distribution reinforcement. The top longitudinal reinforcement is based on current office practice.

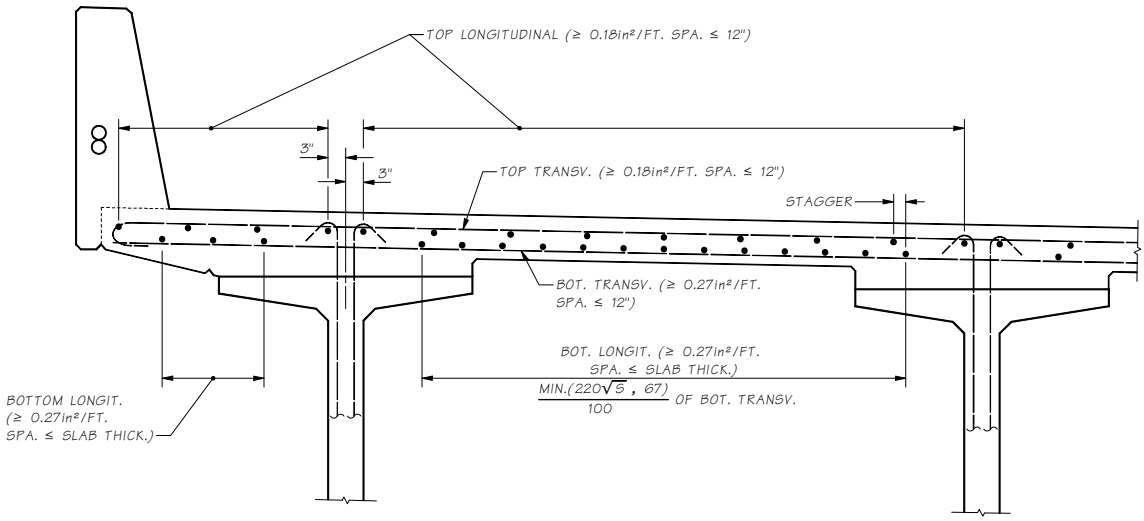

Nominal Longitudinal Deck Slab Reinforcement
Figure 5.7.2-2

2. **Continuous Spans** – Continuity reinforcement shall be provided at supports for loads applied after establishing continuity. The longitudinal reinforcement in the deck slab at intermediate piers is dominated by the negative moment requirement. Where these bars are cut off, they are lapped by the nominal top longitudinal reinforcement described in Section 5.7.2.D. The required deck slab thickness for various bar combinations is shown in Table 5.7.2-1.

C. **Distribution of Flexural Reinforcement** – The provision of AASHTO LRFD 5.7.3.4 for class 2 exposure condition shall be satisfied for both the top and bottom faces of the deck slab.

	Minimum Deck Slab Thickness (Inches) Transverse Bar		
Longitudinal Bar	#5	#6	#7
#4	7½	--	--
#5	7½	7½	7¾
#6	7½	7¾	8
#7	7¾	8	8¼
#8	8	8½	8¾
#9	8½	8¾	9
#10	8¾	--	--

Note:
Deduct ½″ from minimum deck slab thickness shown in table when an overlay is used.

Minimum Deck Slab Thickness for Various Bar Sizes
Table 5.7.2-1

D. **Bar Patterns** – Figure 5.7.2-3 shows two typical top longitudinal reinforcing bar patterns. Care must be taken that bar lengths conform to the requirements of Section 5.1.2.

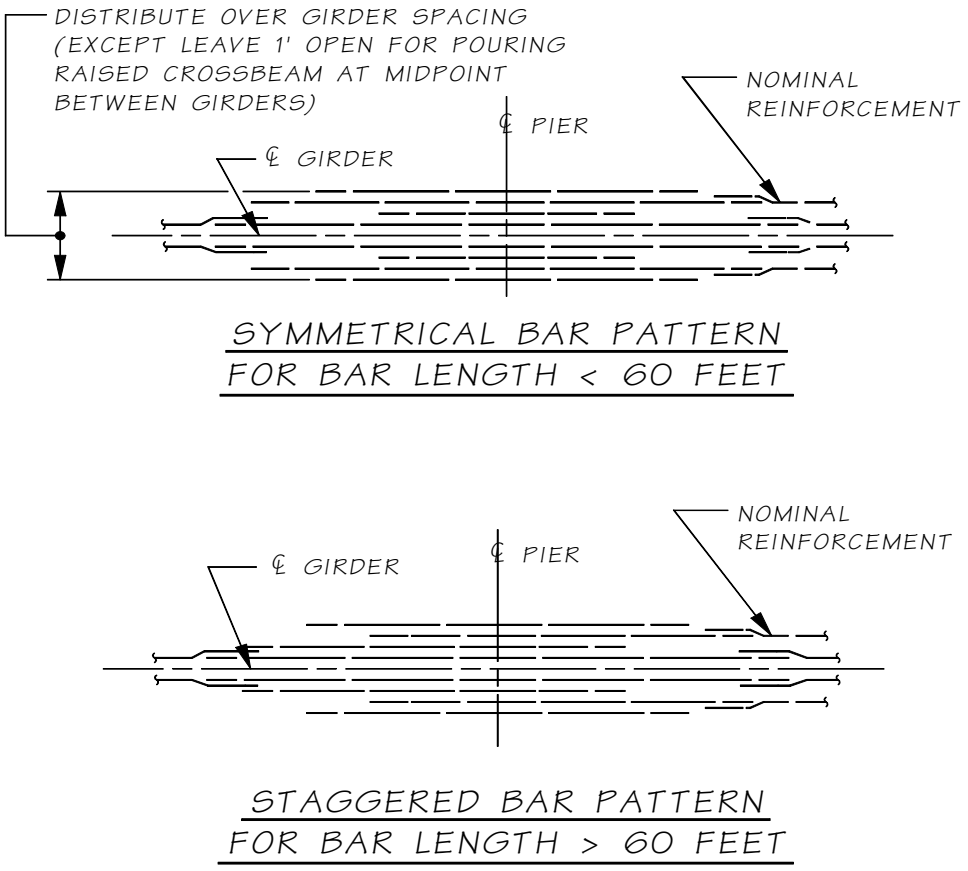

Longitudinal Reinforcing Bar Patterns
Figure 5.7.2-3

The symmetrical bar pattern shown should normally not be used when required bar lengths exceed 60 feet. If the staggered bar pattern will not result in bar lengths within the limits specified in Section 5.1.2, the method shown in Figure 5.7.2-4 may be used to provide an adequate splice. All bars shall be extended by their development length beyond the point where the bar is required.

Normally, no more than 33% of the total area of main reinforcing bars at a support (negative moment) or at midspan (positive moment) shall be cut off at one point. Where limiting this value to 33% leads to severe restrictions on the reinforcement pattern, an increase in figure may be considered. Two reinforcement bars shall be used as stirrup hangers.

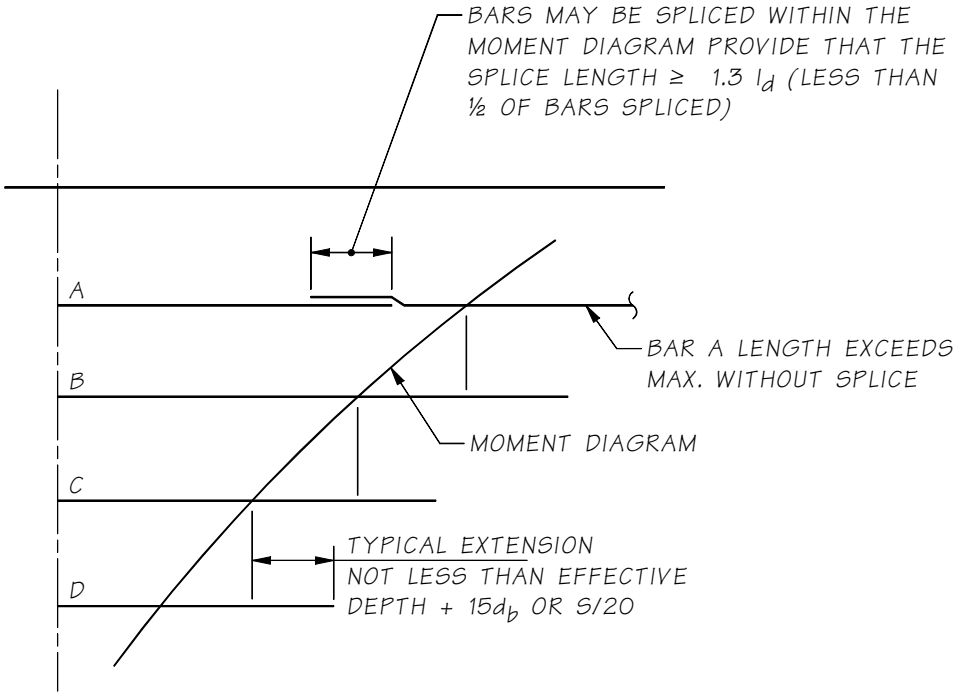

Bar Splice Within Moment Envelope
Figure 5.7.2-4

E. **Concrete Deck Slab Design and Detailing** – These requirements are primarily for beam-slab bridges with main reinforcement perpendicular to traffic:

- Minimum cover over the top layer of reinforcement shall be 2.5″ including 0.5″ wearing surface (Deck Protection Systems 1 and 4). The minimum cover over the bottom layer reinforcement shall be 1.0″.
- The minimum clearance between top and bottom reinforcing mats shall be 1″.
- A maximum bar size of #5 is preferred for longitudinal and transverse reinforcement in the deck slab except that a maximum bar size of #7 is preferred for longitudinal reinforcement at intermediate piers.
- The minimum amount of reinforcement in each direction shall be 0.18 $in.^2$/ft for the top layer and 0.27 $in.^2$/ft for the bottom layer. The amount of longitudinal reinforcement in the bottom of deck slabs shall not be less than $\frac{220}{\sqrt{S}} \leq 67$ percent of the positive moment as specified in AASHTO LRFD 9.7.3.2.
- Top and bottom reinforcement in longitudinal direction of deck slab shall be staggered to allow better flow of concrete between the reinforcing bars.

- The maximum bar spacing in transverse and longitudinal directions for the top mat, and transverse direction of the bottom mat shall not exceed 12″. The maximum bar spacing for bottom longitudinal within the effective length, as specified in AASHTO LRFD 9.7.2.3, shall not exceed the deck thickness.
- Allow the Contractor the option of either a roughened surface or a shear key at the intermediate pier diaphragm construction joint.
- Both, top and bottom layer reinforcement shall be considered when designing for negative moment at the intermediate piers.
- Reduce lap splices if possible. Use staggered lap splices for both top and bottom in longitudinal and transverse directions.

5.7.3 Stay-in-place Deck Panels

A. **General** – The use of precast, prestressed stay-in-place (SIP) deck panels for bridge decks may be investigated at the preliminary design stage. The acceptance evaluation will consider such items as extra weight for seismic design and the resulting substructure impacts.

The composite deck system consisting of precast prestressed concrete deck panels with a CIP topping has advantages in minimizing traffic disruption, speeding up construction and solving constructability issues on certain projects. Contractors, in most cases, prefer this composite deck panel system for bridge decks in traffic congested areas and other specific cases.

SIP deck panels may be used on WSDOT bridges with WSDOT Bridge and Structures Office approval. Details for SIP deck panels are shown in Appendix 5.6-A10-1.

Steel deck forms are not permitted in order to allow inspection of slab soffits and to avoid maintenance of a corrosion protection system.

B. **Design Criteria** – The design of SIP deck panels follows the AASHTO LRFD Specifications and the PCI Bridge Design Manual. The design philosophy of SIP deck panels is identical to simple span prestressed girders. They are designed for Service Limit State and checked for Strength Limit State. The precast panels support the dead load of deck panels and CIP topping, and the composite SIP deck panel and CIP cross-section resists the live load and superimposed dead loads. The tensile stress at the bottom of the panel is limited to zero per WSDOT design practice.

C. **Limitations on SIP Deck Panels** – The conventional full-depth CIP deck slab shall be used for most applications. However, the WSDOT Bridge and Structures Office may allow the use of SIP deck panels with the following limitations:

1. SIP deck panels shall not be used in negative moment regions of continuous conventionally reinforced bridges. SIP deck panels may be used in post-tensioned continuous bridges.
2. Bridge widening. SIP deck panels are not allowed in the bay adjacent to the existing structure because it is difficult to set the panels properly on the existing structure, and the requirement for a CIP closure. SIP deck panels can be used on the other girders when the widening involves multiple girders.
3. Phased construction. SIP deck panels are not allowed in the bay adjacent to the previously placed deck because of the requirement for a CIP closure.
4. Prestressed girders with narrow flanges. Placement of SIP deck panels on girders with flanges less than 12″ wide is difficult.
5. A minimum deck slab thickness of 8.5″, including 3.5″ precast deck panel and 5″ CIP concrete topping shall be specified.
6. SIP deck panels are not allowed for steel girder bridges.

5.7.4 Bridge Deck Protection

All bridge decks, precast or cast-in-place slabs, or deck girder structures shall use a deck protection system as described in this section to reduce the deterioration of the bridge deck and superstructure. The WSDOT Bridge Management Unit shall determine the type of protection system during the preliminary plan or Request For Proposal (RFP) stage for structures not described in this section. Special conditions (i.e. a widening) where it may be desirable to deviate from the standard deck protection systems require approval of the WSDOT Bridge Management Unit.

Preliminary plans shall indicate the protection system in the left margin per BDM Section 2.3.8.

Saw cutting or grinding pavement items are not allowed on the bridge decks. Rumble strips and recessed pavement markers shall not be placed on bridge decks, or approach slab surfaces whether they are concrete or asphalted as stated in Section 8-08 and 8-09 of the *Standard Specifications*, respectively.

Traffic detection loops shall not be located in a bridge surface.

A. **Deck Protection Systems** – The following paragraphs describe five WSDOT protective systems used to protect a traditional concrete bridge deck, deck-girder, or slab design.

1. **Type 1 Protection System** – This is the minimum default protection system for cases where a protection system has not been specified on a structure. Type 1 protection system shall be used for cast-in-place bridge decks with two layers of reinforcement, see Figure 5.7.4-1. This also applies to CIP slab bridges, deck replacements and the widening of existing decks. System 1 consists of the following:

   a. A minimum 2½″ of concrete cover over top bar of deck reinforcing. The cover includes a ½″ wearing surface and ¼″ tolerance for the placement of the reinforcing steel.

   b. Both the top and bottom mat of deck reinforcing shall be epoxy-coated.

   c. Girder stirrups and horizontal shear reinforcement do not require epoxy-coating.

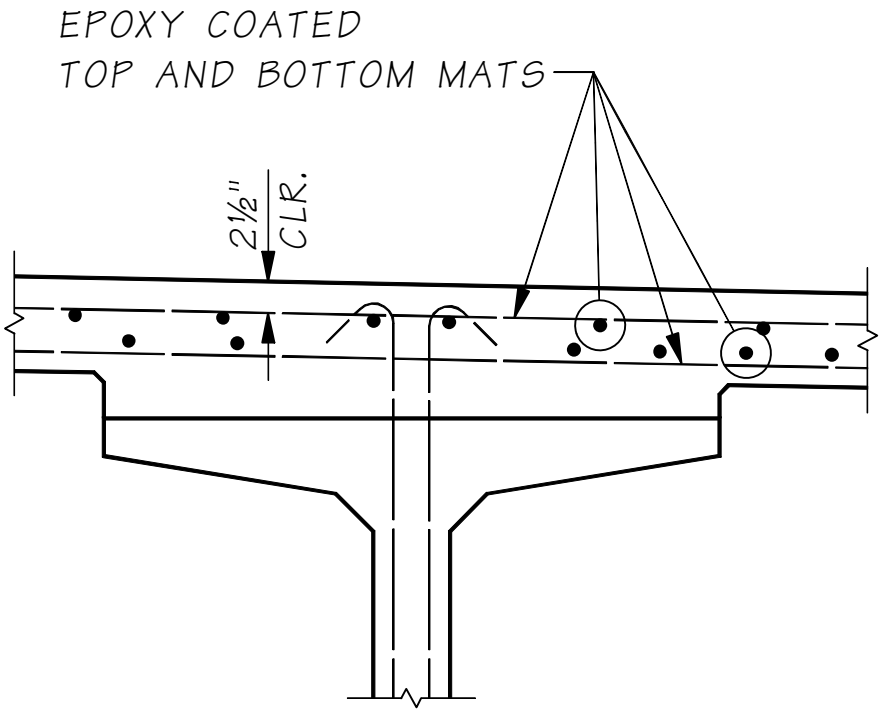

Type 1 Protection System
Figure 5.7.4-1

2. **Type 2 Protection System** – This protection system consists of concrete overlays, see Figure 5.7.4-2. Concrete overlays are generally described as a 1.5″ unreinforced layer of modified concrete used to rehabilitate an existing deck. Overlay concrete is modified to provide a low permeability that slows or prevents the penetration of water into the bridge deck, but also has a high resistance to rutting.

   WSDOT Bridge Management Unit shall determine the type of concrete overlay placed on all new or existing decks; and may specify similar overlays such as a polyester or RSLMC in special cases when rapid construction is cost effective. Brief descriptions of common overlays are as follows.

   a. **1½″ Modified Concrete Overlay** – These overlays were first used by WSDOT in 1979 and have an expected life between 20-40 years. There are more than 600 bridges with concrete overlays as of 2010. This is the preferred overlay system for deck rehabilitation that provides long-term deck protection and a durable wearing surface. In construction, the existing bridge deck is hydromilled ½″ prior to placing the 1.5″ overlay. This requires the grade to be raised 1″. The modified concrete overlay specifications allow a contractor to choose between a Latex, Microsilica or Fly ash mix design. Construction requires a deck temperature between 45°F - 75°F with a wind speed less than 10 mph. Traffic control can be significant since the time to construct and cure is 42 hours.

   b. **¾″ Polyester Modified Concrete Overlay** – These overlays were first used by WSDOT in 1989 and have an expected life between 20-40 years with more than 20 overlay as of 2010. This type of overlay uses specialized polyester equipment and materials. Construction requires dry weather with temperatures above 50°F and normally cures in 4 hours. A polyester concrete overlay may be specified in special cases when rapid construction is needed.

   c. **1½″ Rapid Set Latex Modified Concrete Overlay** – A rapid set latex modified concrete (RSLMC) overlay uses special cement manufactured by the CTS Company based in California. RSLMC is mixed in a mobile mixing truck and applied like a regular concrete overlay. The first RSLMC overlay was applied to bridge 162/20 South Prairie Creek in 2002 under contract 016395. Like polyester, this overlay cures in 4 hours and may be specified in special cases when rapid construction is needed.

   d. **½″ Thin Polymer Overlay** – Thin polymer overlays are built up layers of a polymer material with aggregate broad cast by hand. The first thin overlay was placed in 1986 and after placing 25 overlays, they were discontinued in the late 1998 due to poor performance.

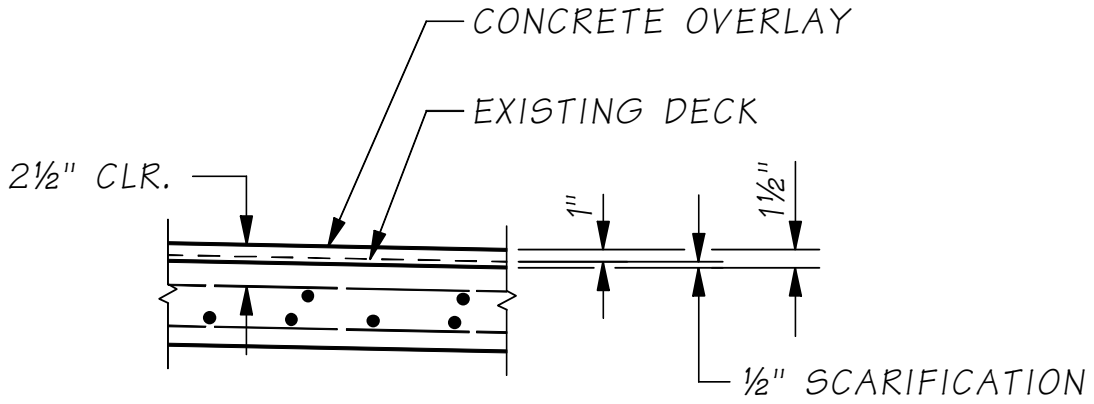

Type 2 Protection System
Figure 5.7.4-2

3. **Type 3 Protection System** – This protection system consists of a Hot Mixed Asphalt (HMA) overlay wearing surface and requires the use of a waterproofing membrane, see Figure 5.7.4-3. HMA overlays provide a lower level of deck protection and introduce the risk of damage by planing equipment during resurfacing. Asphalt overlays with a membrane were first used on a WSDOT bridges in 1971 and about ⅓ of WSDOT structures have HMA. The bridge HMA has an expected life equal to the roadway HMA when properly constructed.

   Waterproof membranes are required with the HMA overlay. Unlike roadway surfaces, the HMA material collects and traps water carrying salts and oxygen at the concrete surface deck. This is additional stress to an epoxy protection system or a bare deck and requires a membrane to mitigate the penetration of salts and oxygen to the structural reinforcement and cement paste. See Standard Specifications for more information on waterproof membranes.

   HMA overlays may be used in addition to the Type 1 Protection System for new bridges where it is desired to match roadway pavement materials. New bridge designs using HMA shall have a depth of overlay between 0.15′ (1.8″) and 0.25′ (3″). Designers should consider designing for a maximum depth of 0.25′ to allow future overlays to remove and replace 0.15′ HMA without damaging the concrete cover or the waterproof membrane. Plan sheet references to the depth of HMA shall be in feet, since this is customary for the paving industry. WSDOT roadway resurfacing operations will normally plane and pave 0.15′ of HMA which encourages the following design criteria.

   Existing structures may apply an HMA overlay in accordance with the Bridge Paving Policies, Section 5.7.5.

   Standard Plan A-40.20.00, Bridge Transverse Joints Seals for HMA provides some standard details for saw cutting small relief joints in HMA paving. Saw cut joints can have a longer life, better ride, and help seal the joint at a location known to crack and may be used for small bridge expansion joints less than 1 inch.

   WSDOT prohibits the use of a Type 3 Protection System for prestressed slab or deck girder bridges managed by WSDOT except for pedestrian bridges or for widening existing similar structures with an HMA overlay. The HMA with membrane provides some protection to the connections between girder or slab units, but can be prone to reflective cracking at the joints. It is not uncommon for voided slabs to fill with water and aggressively corrode the reinforcement. Precast prestressed members with a Type 3 Protection System shall have a minimum cover of 2″ over an epoxy coated top mat.

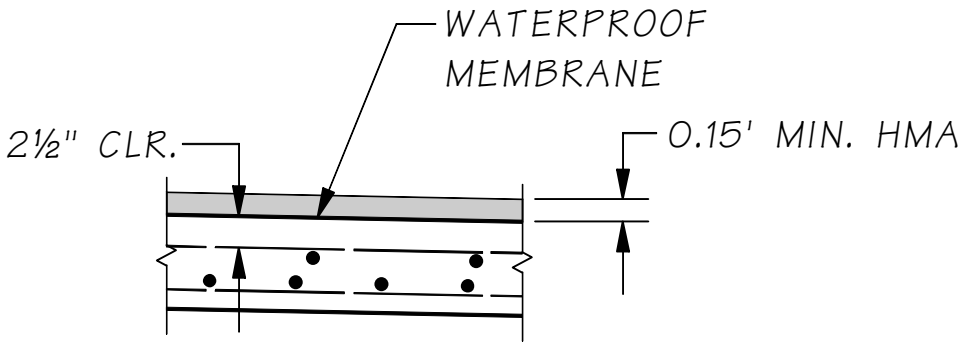

Type 3 Protection System
Figure 5.7.4-3

4. **Type 4 Protection System** – This system is a minimum 5″ cast-in-place (CIP) topping with one mat of epoxy coated reinforcement and placed on prestressed slab or deck girder members, see Figure 5.7.4-4. This system eliminates girder wheel distribution problems, provides a quality protection system and provides a durable wearing surface.

   a. A minimum concrete cover of 1″ applies to the top mat of the top flange of the prestressed member.

   b. Epoxy coating the prestressed member top mat reinforcement is not required.

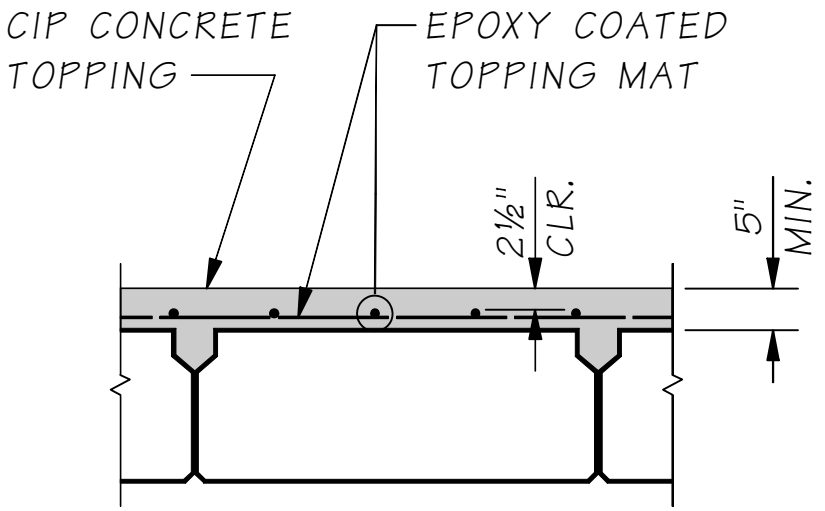

Type 4 Protection System
Figure 5.7.4-4

5. **Type 5 System** – This system requires a layered, 3″ concrete cover for double protection, see Figure 5.7.4-5. All segmentally constructed bridges shall use this system to protect construction joints and provide minor grade adjustments during construction. Bridge decks with transverse or longitudinal post-tensioning in the deck shall use this system since deck rehabilitation due to premature deterioration is very costly. The 3″ cover consists of the following:

   a. The deck is constructed with a 1¾″ concrete cover.

   b. Both the top and bottom mat of deck reinforcing are epoxy-coated. Girder/web stirrups and horizontal shear reinforcement does not require epoxy-coating.

   c. The deck is then scarified ¼″ prior to the placement of a modified concrete overlay. Scarification shall be diamond grinding to preserve the integrity of the segmental deck and joints.

   d. A Type 2a, 1½″ Modified Concrete Overlay is placed as a wearing surface.

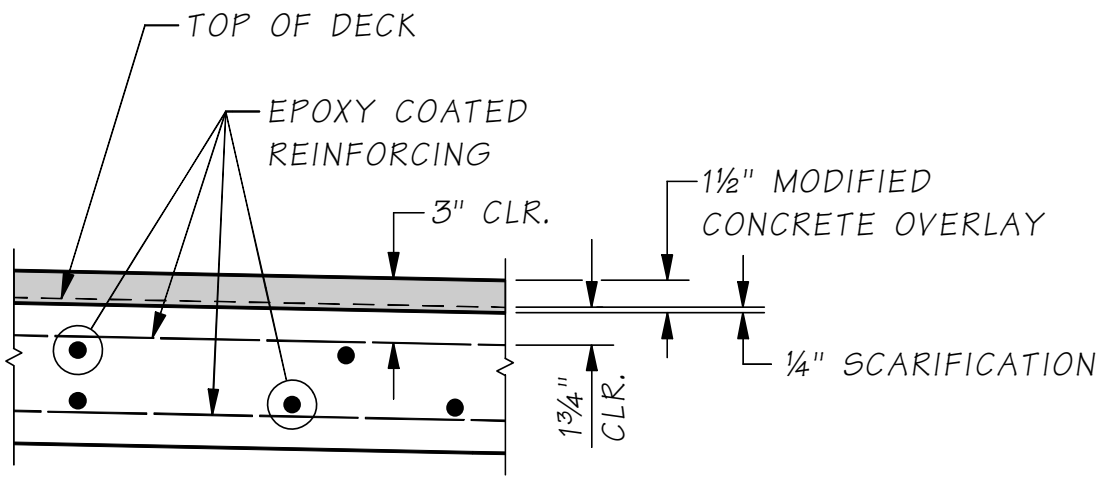

Type 5 Protection System
Figure 5.7.4-5

B. **Existing Bridge Deck Widening** – New deck rebar shall match the existing top layer. This provides steel at a uniform depth which is important when removing concrete during future rehab work. Bridges prior to the mid 1980's used 1½″ concrete cover. New and widened decks using a Type 1 Protection System have 2½″ cover.

When an existing bridge is widened, the existing concrete or asphalt deck may require resurfacing. WSDOT is forced to rehab concrete decks based on the condition of the existing deck or concrete overlay. If a deck or overlay warrants rehabilitation, then the existing structure shall be resurfaced and included in the widening project.

By applying the stated design criteria, the following policies shall apply to bridge widening projects which may require special traffic closures for the bridge work.

1. **Rebar** – The deck or cast-in-place slab of the new widened portion shall use the Type 1 Protection System, even though the existing structure has bare rebar. The top mat of new rebar shall match the height of existing rebar. Variations in deck thickness are to be obtained by lowering the bottom of the deck or slab.

2. **Concrete Decks** – If the existing deck is original concrete without a concrete overlay, the new deck shall have a Type 1 Protection System and the existing deck shall have a 1½″ concrete overlay or Type 2 Protection System. This matches the rebar height and provides a concrete cover of 2.5″ on both the new and old structure.

   If the existing deck has a concrete overlay, the new deck shall have a Type 1 Protection System and the existing overlay shall be replaced if the deck deterioration is greater than 1% of the deck area.

3. **Concrete Overlays** – It is preferred to place a concrete overlay from curb to curb. If this is problematic for traffic control, then Plans shall provide at least a 6″ offset lap where the overlay construction joint will not match the deck construction joint.

4. **HMA Overlays** – The depth of existing asphalt must be field measured and shown on the bridge plans. This mitigates damage of the existing structure due to removal operations and reveals other design problems such as: improper joint height, buried construction problems, excessive weight, or roadway grade transitions adjustments due to drainage.

   The new deck must meet the rebar and cover criteria stated above for Concrete Decks and deck tinning is not required. Type 3 Protection system shall be used and HMA shall be placed to provide a minimum 0.15′ or the optimum 0.25′.

5. **Small Width Widening** – With approval of the WSDOT Bridge Management Unit, smaller width widening design that has traffic on the new construction can match existing 1½″ concrete cover for the widened portion, if the existing deck deterioration is greater than 1% of the deck area.
6. **Expansion Joints** – All joints shall be in good condition and water tight for the existing bridge and the newly constructed widened portion. The following joint criteria applies:
   a. The existing expansion joint shall be replaced if:
      1. More than 10% of the length of a joint has repairs within 1′-0″ of the joint.
      2. Part of a joint is missing.
      3. The joint is a non-standard joint system placed by maintenance.
   b. All existing joint seals shall be replaced.
   c. When existing steel joints are not replaced in the project, the new joint shall be the same type and manufacturer as the existing steel joint.
   d. Steel joints shall have no more than one splice and the splice shall be at a lane line. Modular joints shall not have any splices.

5.7.5 Bridge Deck HMA Paving Design Policies

This Section of the BDM establishes the criteria used to provide bridge paving design options for paving projects. Bridge paving design options are customized for each bridge based on the existing conditions and previous paving. Paving designers including paving consultants are required to request a Bridge deck Condition Report (BCR) for each bridge which contains the paving design options and other relevant bridge information for each bridge within the project limits.

An asphalt wearing surface is a recognized method to manage concrete rutting, improve the ride on HMA roadways, and is a form of deck protection. Bridges may or may not have the capacity to carry the additional dead load of an asphalt wearing surface. The design options are documented for the paving project in a BCR. The Bridge Office will provide bridge sheets for structural items and the required Special Provisions for the WSDOT projects. The Bridge Office Projects and Design Engineer should be notified early in the paving design to allow time to complete engineering and plan sheets.

All WSDOT structures within the defined project limits must be evaluated for paving or Bituminous Surface Treatment (BST or chip seal). All bridges shall be identified in the Plans as “INCLUDED IN PROJECT” or “NOT INCLUDED” per WSDOT Plan Preparation Manual, Section 4 “Vicinity Map”, paragraph (n). This includes all state bridges and not limited to:

1. Off the main line. Typical locations include bridges on ramps, frontage roads, or bridges out of right-of-way.
2. Bridges where the main line route crosses under the structure.
3. Bridges at the beginning and ending stations of the project. It is not necessary to include the bridge when it was recently resurfaced, but it should be included if incidental joint maintenance repairs are necessary.

Region is responsible for field evaluation of paving condition and the depth of asphalt provided by the last paving contract. Asphalt depths can vary on the concrete deck and from bridge to bridge. In most cases, asphalt depth measurements at the fog line on the four corners of the deck are sufficient to establish a design depth for contracts. The Bridge Asset Manager shall be informed of the measurements. Paving shown in the Plans would use an approximate or averaged value of the measurements. Some situations may require a Plan Detail showing how the depth varies for the Planing contractor.

A standard Microstation detail is available to simplify detailing of bridge paving in the Plans, see "SH_DT_RDSECBridgeDeckOverlay_Detail". The table format is copied from the BCR and allows the bridge paving design requirements to be listed in the table. All bridges within the limits of the project must be listed in the table to clarify which structures do not have paving and facilitate data logging for the Washington State Pavement Management System and the Bridge Office.

The following bridge paving policies have been developed with the concurrence of WSDOT Pavement Managers to establish bridge HMA Design options available for state managed structures.

1. **Maximum HMA Depth** – Bridge decks shall be 0.25′ or 3″. A greater depth may be allowed if the structure is specifically designed for more than 0.25′, such as structures with ballast or as approved by the WSDOT Load Rating Engineer. Paving designs that increase the HMA more than 3″ require a new Load Rating analysis and shall be submitted to the WSDOT Load Rating engineer.

   a. Concrete bridge decks with more than 0.21′ HMA may be exempted from paving restrictions for mill/fill HMA design.

   b. Deck girders and slabs with less than 0.25′ HMA require paving restrictions to avoid planing the supporting structure.

   c. A paving grade change will be required when more than 0.25′ of asphalt exists on a structure in order to reduce the weight on the structure and meet acceptable rail height standards.

2. **Grade limited/0.15′** – For bridge decks with 0.15′ HMA and the grade is limited by bridge joint height or other considerations, resurfacing must provide full depth removal of HMA or mill/fill the minimum 0.12′.

3. **Grade Transitions** – When raising or lowering the HMA grade profile on/off or under the bridge, the maximum rate of change or slope shall be 1″/40′ (1′/500′) as shown in Standard Plan A60.30.00, even if this means extending the project limits. Incorrect transitions are the cause of many "bumps at the bridge" and create an undesired increase in truck loading. The following items should be considered when transitioning a roadway grade:

   a. Previous HMA overlays that raised the grade can significantly increase the minimum transition length.

   b. Drainage considerations may require longer transitions or should plane to existing catch basins.

   c. Mainline paving that raises the grade under a bridge must verify Vertical Clearance remains in conformance to current Vertical Clearance requirements. Mill/Fill of the roadway at the bridge is generally desired unless lowering the grade is required.

      i. Design Manual Reference: Section 720.04 Bridge Site Design Elements, (5) Vertical Clearances, (c) Minimum Clearance for Existing Structures, 1. Bridge Over a Roadway.

4. **Full Removal** – Full depth removal and replacement of the HMA is always an alternate resurfacing design option. Full depth removal may be required by the Region Pavement Manager or the Bridge Office due to poor condition of the HMA or bridge deck. Bridge Deck Repair and Membrane Waterproofing (Deck Seal) standard pay items are required for this option and the Bridge Office will provide engineering estimates of the quantity (SF) and cost for both.

   a. Bridge Deck Repair will be required when the HMA is removed and the concrete is exposed for deck inspection. Chain Drag Testing is completed and based on the results, the contractor is directed to fix the quantity of deck repairs. The Chain Drag results are sent to the Bridge Asset Manager and used by the Bridge Office to monitor the condition of the concrete deck and determine when the deck needs rehabilitation or replacement.

b. Membrane Waterproofing (Deck Seal) is Std. Item 4455 and will be required for all HMA bridge decks, except when the following conditions are met.

i. HMA placed on a deck that has a Modified Concrete Overlay which acts like a membrane.

ii. The bridge is on the P2 replacement list or deck rehabilitation scheduled within the next 4 years or two bienniums.

5. **Bare Deck HMA** – Paving projects may place HMA on a bare concrete deck, with concurrence of the WSDOT Bridge Asset Manager, if the bridge is on an HMA route and one of the following conditions apply.

a. Rutting on the concrete deck is ½″ or more.

b. The Region prefers to simplify paving construction or improve the smoothness at the bridge.

When the concrete bridge deck does not have asphalt on the surface, Region Design should contact the Region Materials lab and have a Chain Drag Report completed and forwarded to the Bridge Asset Manager during design to establish the Bridge Deck Repair quantities for the project. Pavement Design should then contact Region Bridge Maintenance to request the repairs be completed prior to contract; or the repairs may be included in the paving contract. Small amounts of Bridge Deck Repair have an expensive unit cost by contract during paving operations.

6. **Bridge Transverse Joint Seals** – Saw cut pavement joints shown in Std. Plan A-40.20.00 perform better and help prevent water problems at the abutment or in the roadway. Typical cracking locations where pavement joint seals are required: End of the bridge; End of the approach slab; or HMA joints on the deck. Std. Plan A-40.20.00, Detail 8 shall be used at all truss panel joint locations. However, if Pavement Designers do not see cracking at the ends of the bridge, then sawcut joints may be omitted for these locations. HQ Program management has determined this work is "incidental" to P1 by definition and should be included in a P1 paving project and use Std. Item 6517. The following summarizes the intended application of the Details in Std. Plan A-40.20.00.

a. **Detail 1** – Applies where HMA on the bridge surface butts to the HMA roadway.

b. **Detail 2, 3, & 4 –** Applies where concrete bridge surface butts to the HMA roadway.

c. **Detail 8** – Applies at truss panel joints or generic open concrete joints.

d. **Detail 5, 6 &7** – For larger 1″ sawcut joints instead of ½″ joints provided in details 2, 3, & 4.

7. **BST (chip seal)** – Bituminous Surface Treatments ½″ thick may be applied to bridge decks with HMA under the following conditions.

a. Plans must identify or list all structures bridges included or excepted within project limits and identify bridge expansion joint systems to be protected.

b. BST is not allowed on weight restricted or posted bridges.

c. Planing will be required for structures at the maximum asphalt design depth or the grade is limited.

It is true that BSTs are not generally a problem but only if the structure is not grade limited by for structural reasons. BCRs will specify a ½″ chip seal paving depth of 0.03′ for BST Design to be consistent with Washington State Pavement Management System. Plans should indicate ½″ chip seal to be consistent with Standard Specifications and standard pay items.

8. **Culverts and Other Structures** – Culverts or structures with significant fill and do not have rail posts attached to the structure generally will not have paving limitations. Culverts and structures with HMA pavement applied directly to the structure have bridge paving design limits.

5.8 Cast-in-place Post-tensioned Bridges

5.8.1 Design Parameters

A. **General** – Post-tensioning is generally used for CIP construction and spliced precast girders since pretensioning is generally practical only for fabricator-produced structural members. The Post-tensioned Box Girder Bridge Manual[17] published by the Post-tensioning Institute in 1978 is recommended as the guide for design. This manual discusses longitudinal post-tensioning of box girder webs and transverse post-tensioning of box girder slabs, but the methods apply equally well to other types of bridges. The following recommendations are intended to augment the PTI Manual and the AASHTO LRFD Specifications and point out where current WSDOT practice departs from practices followed elsewhere.

The AASHTO criteria for reinforced concrete apply equally to bridges with or without post-tensioning steel. However, designers should note certain requirements unique to prestressed concrete such as special ϕ-factors, load factors and shear provisions.

Post-tensioning consists of installing steel tendons into a hollow duct in a structure after the concrete sections are cast. These tendons are usually anchored at each end of the structure and stressed to a design strength using a hydraulic jacking system. After the tendon has been stressed, the duct is filled with grout which bonds the tendon to the concrete section and prevents corrosion of the strand. The anchor heads are then encased in concrete to provide corrosion protection.

B. **Bridge Types –** Post-tensioning has been used in various types of CIP bridges in Washington State with box girders predominating. See Appendix 5-B4 for a comprehensive list of box girder designs. The following are some examples of other bridge types:

Kitsap County, Contract 9788, Multi-Span Slab

Peninsula Drive, Contract 5898, Two- Span Box Girder

Covington Way to 180th Avenue SE, Contract 4919, Two-Span Box Girder Longitudinal Post-tensioning

Snohomish River Bridge, Contract 4444, Multi-Span Box Girder Longitudinal Post-tensioning

See Section 2.4.1 of this manual for structure type comparison of post-tensioned concrete box girder bridges to other structures. In general, a post-tensioned CIP bridge can have a smaller depth-to-span ratio than the same bridge with conventional reinforcement. This is an important advantage where minimum structure depth is desirable.

1. **Slab Bridge –** Structure depth can be quite shallow in the positive moment region when post-tensioning is combined with haunching in the negative moment region. However, post-tensioned CIP slabs are usually more expensive than when reinforced conventionally. Designers should proceed with caution when considering post-tensioned slab bridges because severe cracking in the decks of bridges of this type has occurred [21, 22, 23].

   The Olalla Bridge (Contract 9202) could be reviewed as an example. This bridge has spans of 41.5′ - 50′ - 41.5′, a midspan structure depth of 15 inches, and some haunching at the piers.

2. **T-Beam Bridge –** This type of bridge, combined with tapered columns, can be structurally efficient and aesthetically pleasing, particularly when the spacing of the beams and the columns are the same. A T-Beam bridge can also be a good choice for a single-span simply-supported structure.

   When equally spaced beams and columns are used in the design, the width of beam webs should generally be equal to the width of the supporting columns. See SR 16, Union Avenue O'Xings, for an example. Since longitudinal structural frame action predominates in this type of design, crossbeams at intermediate piers can be relatively small and the post-tensioning tendons can be placed side-by-side in the webs, resulting in an efficient center of gravity of steel line throughout.

For other types of T-Beam bridges, the preferred solution may be smaller, more closely spaced beams and fewer, but larger pier elements. If this type of construction is used in a multispan, continuous bridge, the beam cross-section properties in the negative moment regions need to be considerably larger than the properties in the positive moment regions to resist compression.

Larger section properties can be obtained by gradually increasing the web thickness in the vicinity of intermediate piers or, if possible, by adding a fillet or haunch. The deck slab overhang over exterior webs should be roughly half the web spacing.

3. **Box Girder Bridge** – This type of bridge has been a popular choice in this state. The cost of a prestressed box girder bridge is practically the same as a conventionally-reinforced box girder bridge, however, longer spans and shallower depths are possible with prestressing.

   The superstructure of multi-cell box girders shall be designed as a unit. The entire superstructure section (traffic barrier excluded) shall be considered when computing the section properties.

   For criteria on distribution of live loads, see Section 3.9.4. All slender members subjected to compression must satisfy buckling criteria.

   Web spacing should normally be 8 to 11 feet and the top slab overhang over exterior girders should be approximately half the girder spacing unless transverse post-tensioning is used. The apparent visual depth of box girder bridges can be reduced by sloping all or the lower portion of the exterior web. If the latter is done, the overall structure depth may have to be increased. Web thickness should be 12 inches minimum, but not less than required for shear and for concrete placing clearance. Providing 2½″ of clear cover expedites concrete placement and consolidation in the heavily congested regions adjacent to the post-tensioning ducts. Webs should be flared at anchorages. Top and bottom slab thickness should normally meet the requirements of Section 5.3.1.B, but not less than required by stress and specifications. Generally, the bottom slab would require thickening at the interior piers of continuous spans. This thickening should be accomplished by raising the top surface of the bottom slab at the maximum rate of ½″ per foot.

C. **Strand and Tendon Arrangements –** The total number of strands selected should be the minimum required to carry the service loads at all points. Duct sizes and the number of strands they contain vary slightly, depending on the supplier. Chapter 2 of the PTI Post-tensioned Box Girder Bridge Manual, and shop drawings of the recent post-tensioned bridges kept on file in the Construction Plans Section offer guidance to strand selection. In general, a supplier will offer several duct sizes and associated end anchors, each of which will accommodate a range of strand numbers up to a maximum in the range. Present WSDOT practice is to indicate only the design force and cable path on the contract plans and allow the post-tensioning supplier to satisfy these requirements with tendons and anchors. The most economical tendon selection will generally be the maximum size within the range. Commonly-stocked tendons for ½″ diameter strands include 9, 12, 19, 27, 31, and 37 strands, and the design should utilize a combination of these commonly-stocked items. For example, a design requiring 72 strands per web would be most economically satisfied by two standard 37-strand tendons. A less economical choice would be three standard 27-strand tendons containing 24 strands each. Tendons shall not be larger than (37) ½″ strand units or (27) 0.6″ strand units, unless specifically approved by the WSDOT Bridge Design Engineer. The duct area shall be at least 2.5 times the net area of the prestressing steel. In the regions away from the end anchorages, the duct placement patterns indicated in Figures 5.8.1-1 through 5.8.1-3 shall be used.

Although post-tensioning steel normally takes precedence in a member, sufficient room must be provided for other essential mild steel and placement of concrete, in particular near diaphragms and cross-beams.

More prestress may be needed in certain portions of a continuous superstructure than elsewhere, and the designer may consider using separate short tendons in those portions of the spans only. However, the savings on prestressing steel possible with such an arrangement should be balanced against the difficulty involved in providing suitable anchoring points and sufficient room for jacking equipment at intermediate locations in the structure. For example, torsion in continuous, multigirder bridges on a curve can be counter-balanced by applying more prestress in the girders on the outside of the curve than in those on the inside of the curve.

Some systems offer couplers which make possible stage construction of long bridges. With such systems, forms can be constructed and concrete cast and stressed in a number of spans during stage 1, as determined by the designer. After stage 1 stressing, couplers can be added, steel installed, concrete cast and stressed in additional spans. To avoid local crushing of concrete and/or grout, the stress existing in the steel at the coupled end after stage 1 stressing shall not be exceeded during stage 2 stressing.

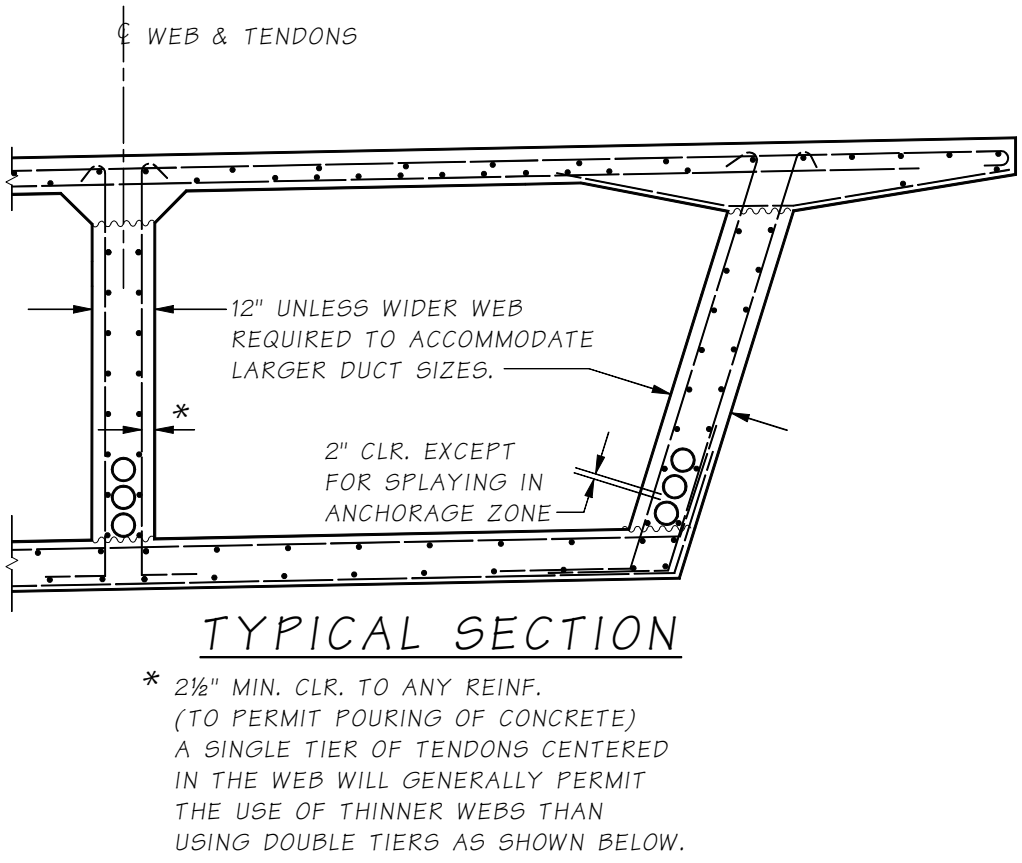

Tendon Placement Pattern for Box Girder Bridges
Figure 5.8.1-1

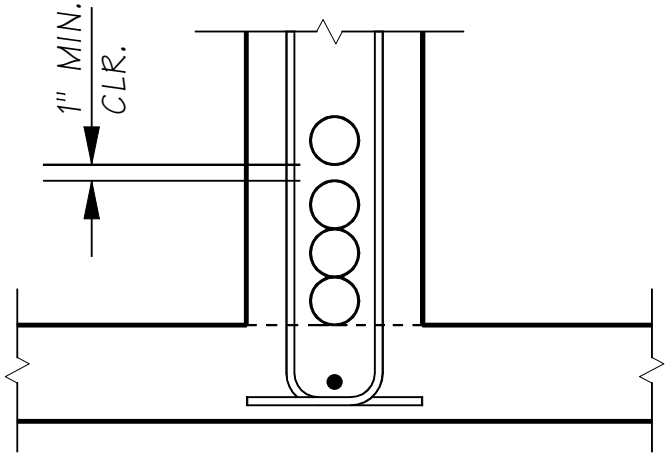

DUCTS 2 " O.D. TO 3" O.D.

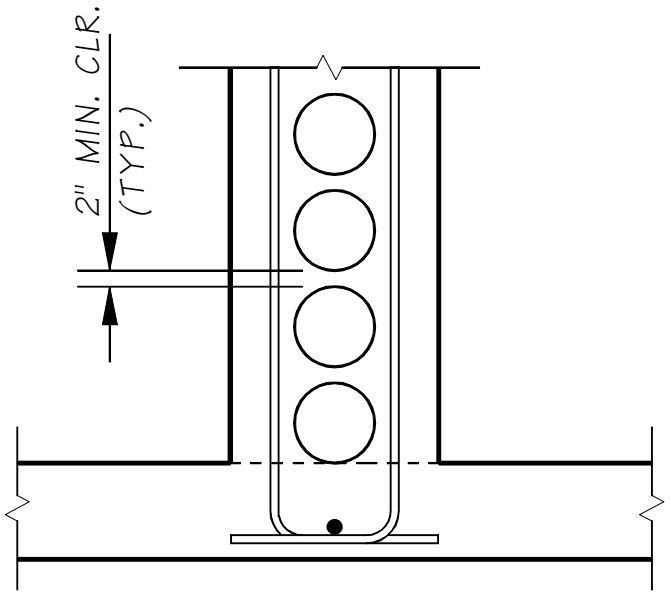

DUCTS OVER 3" O.D.

Tendon Placement Pattern for Box Girder Bridges
Figure 5.8.1-2

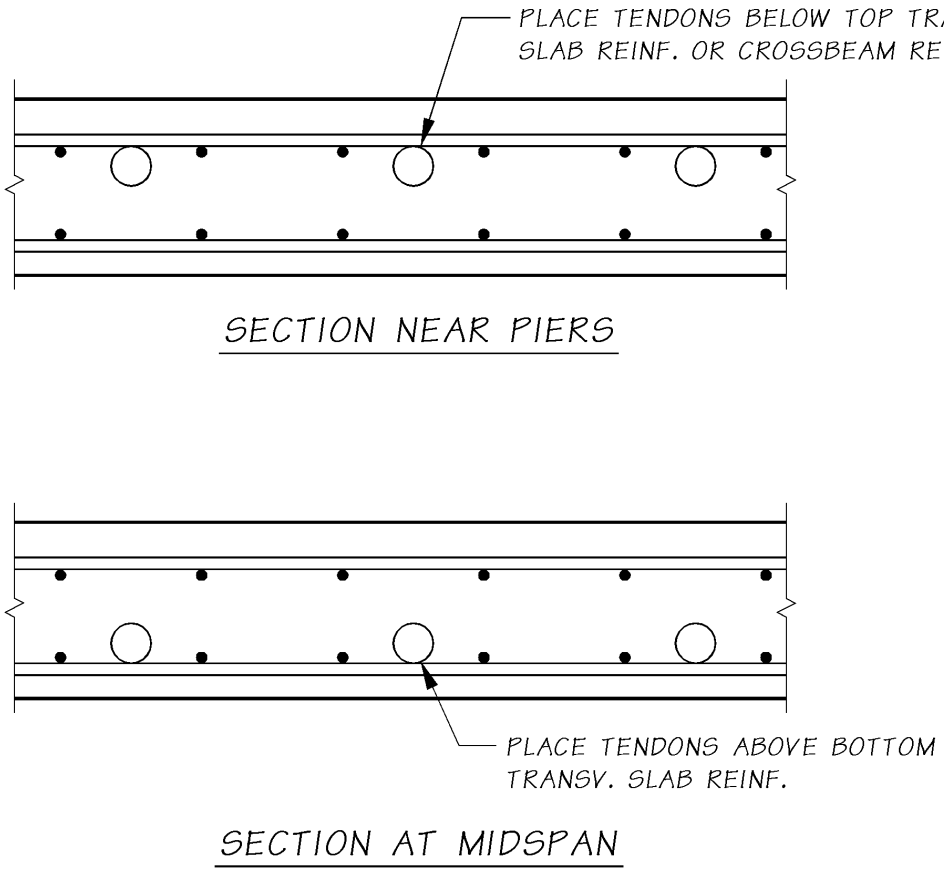

Tendon Placement Pattern for Flat Slab Bridges
Figure 5.8.1-3

D. **Layout of Anchorages and End Blocks –** Consult industry brochures and shop plans for recent bridges before laying out end blocks. To encourage bids from a wider range of suppliers, try to accommodate the large square bearing plate sizes common to several systems.

Sufficient room must be allowed inside the member for mild steel and concrete placement and outside the member for jacking equipment. The size of the anchorage block in the plane of the anchor plates shall be large enough to provide a minimum of 1″ clearance from the plates to any free edge.

The end block dimensions shall meet the requirements of the AASHTO LRFD Specifications. Note that in long-span box girder superstructures requiring large bearing pads, the end block should be somewhat wider than the bearing pad beneath to avoid subjecting the relatively thin bottom slab to high bearing stresses. When the piers of box girder or T-beam bridges are severely skewed, the layout of end blocks, bearing pads, and curtain walls at exterior girders become extremely difficult as shown in Figure 5.8.1-4. Note that if the exterior face of the exterior girder is in the same plane throughout its entire length, all the end block widening must be on the inside. To lessen the risk of tendon break-out through the side of a thin web, the end block shall be long enough to accommodate a horizontal tendon curve of 200 feet minimum radius. The radial component of force in a curved cable is discussed in AASHTO LRFD 5.10.4.3.

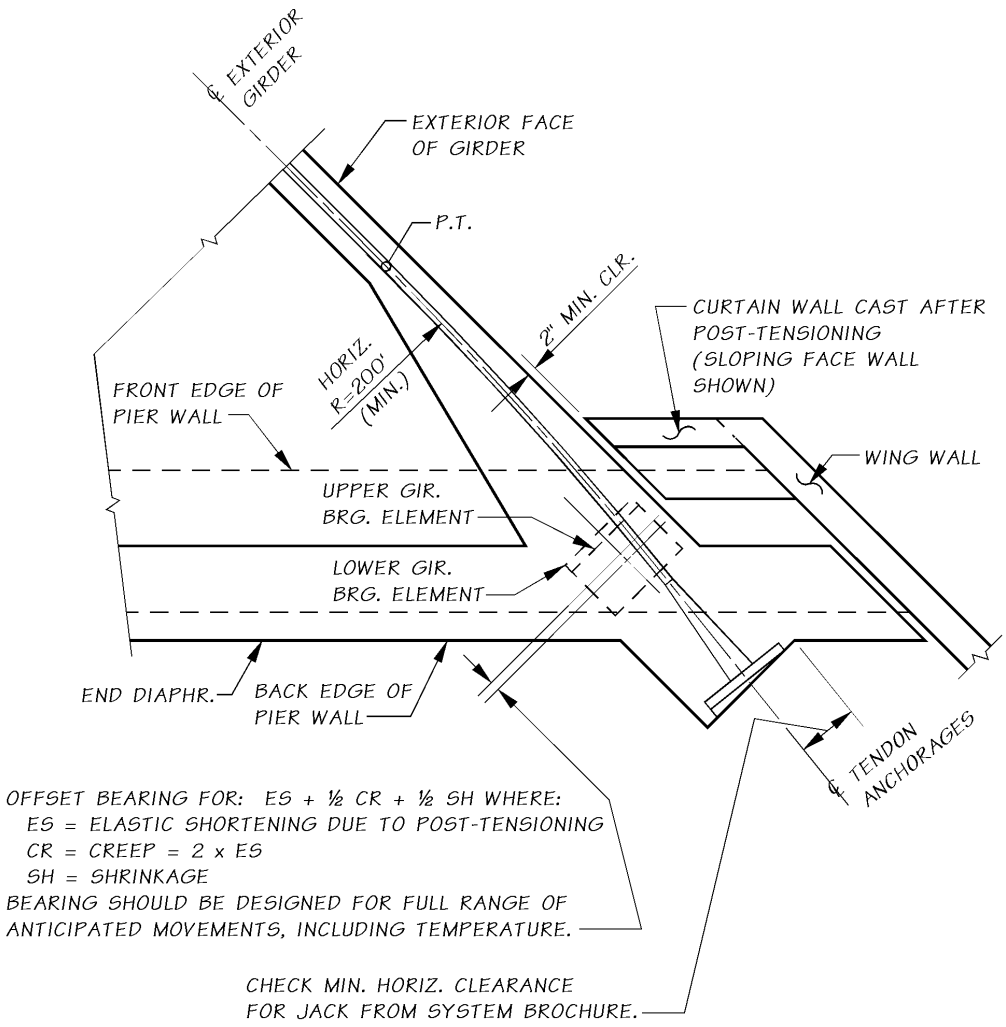

Layout of Anchorages and End Blocks
Figure 5.8.1-4

E. **Superstructure Shortening –** Whenever members such as columns, crossbeams, and diaphragms are appreciably affected by post-tensioning of the main girders, those effects shall be included in the design. This will generally be true in structures containing rigid frame elements. For further discussion, see Chapter 2.6 of reference [17].

Past practice in the state of Washington regarding control of superstructure shortening in post-tensioned bridges with rigid piers can be illustrated by a few examples. Single-span bridges have been provided with a hinge at one pier and longitudinal slide bearings at the other pier. Two-span bridges have been detailed with longitudinal slide bearings at the end piers and a monolithic middle pier. On the six-span Evergreen Parkway Undercrossing (Bridge Number 101/510), the center pier (pier 4) was built monolithic with the superstructure, and all the other piers were constructed with slide bearings. After post-tensioning, the bearings at piers 3 and 5 were converted into fixed bearings to help resist large horizontal loads such as earthquakes.

Superstructures which are allowed to move longitudinally at certain piers are typically restrained against motion in the transverse direction at those piers. This can be accomplished with suitable transverse shear corbels or bearings allowing motion parallel to the bridge only. The casting length for box girder bridges shall be slightly longer than the actual bridge layout length to account for the elastic shortening of the concrete due to prestress.

F. **Effects of Curved Tendons –** AASHTO LRFD 5.10.4.3 shall be used to consider the effects of curved tendons. In addition, confinement reinforcement shall be provided to confine the PT tendons when R_{in} is less than 800 ft or the effect of in-plane plus out-of-plane forces is greater than or equal to 10 k/ft:

$$\frac{P_u}{R_{in}} + \frac{P_u}{\pi R_{out}} \geq 10\,\frac{k}{ft} \qquad (5.8.1\text{-}1)$$

Where:

P_u = Factored tendon force = 1.3 P_{jack} (kips)

R_{in} = Radius of curvature of the tendon at the considered location causing in-plane force effects (typically horizontal) (ft)

R_{out} = Radius of curvature of the tendon at the considered location causing out-of-plane force effects (typically vertical) (ft)

Curved tendon confinement reinforcement, when required, shall be as shown in Figure 5.8.1-5. Spacing of the confinement reinforcement shall not exceed either 3.0 times the outside diameter of the duct or 18.0 in.

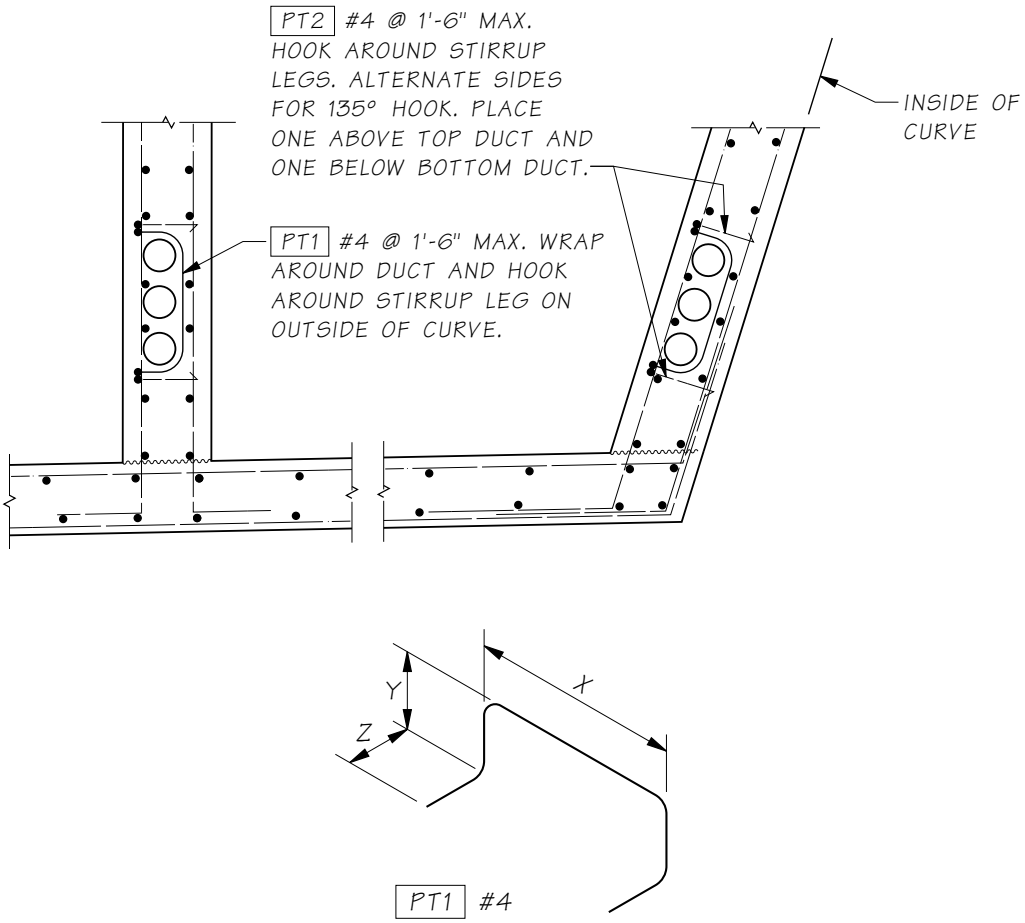

Curved Tendon Confinement Reinforcement
Figure 5.8.1-5

G. **Edge Tension Forces –** If the centroid of all tendons is located outside of the kern of the section, longitudinal edge tension force is induced. The longitudinal edge tension force may be determined from an analysis of a section located at one-half the depth of the section away from the loaded surface taken as a beam subjected to combined flexural and axial load.

5.8.2 Analysis

A. **General –** The procedures outlined in Section 2.1 through 2.5 of reference [17] for computation of stress in single and multispan box girders can be followed for the analysis of T-beams and slab bridges as well.

The BDS program available on the WSDOT system will quickly perform a complete stress analysis of a box girder, T-beam, or slab bridge, provided the structure can be idealized as a plane frame. For further information, see the program user instructions.

STRUDL or SAP is recommended for complex structures which are more accurately idealized as space frames. Examples are bridges with sharp curvature, varying superstructure width, severe skew, or slope-leg intermediate piers. An analysis method in Chapter 10 of reference[18] for continuous prestressed beams is particularly well adapted to the loading input format in STRUDL. In the method, the forces exerted by cables of parabolic or other configurations are converted into equivalent vertical linear or concentrated loads applied to members and joints of the superstructure. The vertical loads are considered positive when acting up toward the center of tendon curvature and negative when acting down toward the center of tendon curvature. Forces exerted by anchor plates at the cable ends are coded in as axial and vertical concentrated forces combined with a concentrated moment if the anchor plate group is eccentric. Since the prestress force varies along the spans due to the effects of friction, the difference between the external forces applied at the end anchors at opposite ends of the bridge must be coded in at various points along the spans in order for the summation of horizontal forces to equal zero. With correct input (check thoroughly before submitting for computation), the effects of elastic shortening and secondary moments are properly reflected in all output listings, and the prestress moments printed out are the actual resultant (total) moments acting on the structure. For examples of the application of STRUDL to post-tensioning design, see the calculations for I-90 West Sunset Way Ramp (simple), I-5 Nalley Valley Viaduct (complex), and the STRUDL manuals.

B. **Section Properties –** As in other types of bridges, the design normally begins with a preliminary estimate of the superstructure cross-section and the amount of prestress needed at points of maximum stress and at points of cross-section change. For box girders, see Figures 2-0 through 2-5 of Reference[17]. For T-beam and slab bridges, previous designs are a useful guide in making a good first choice.

For frame analysis, use the properties of the entire superstructure regardless of the type of bridge being designed. For stress analysis of slab bridges, calculate loads and steel requirements for a 1′ wide strip. For stress analysis of T-beam bridges, use the procedures outlined in the AASHTO LRFD Specifications.

Note that when different concrete strengths are used in different portions of the same member, the equivalent section properties shall be calculated in terms of either the stronger or weaker material. In general, the concrete strength shall be limited to the values indicated in Section 5.1.1 of this manual.

C. **Preliminary Stress Check –** In accordance with AASHTO, flexural stresses in prestressed members are calculated at service load levels. Shear stresses, stirrups, moment capacities vs. applied moments are calculated at ultimate load levels.

During preliminary design, the first objective should be to satisfy the allowable flexural stresses in the concrete at the critical points in the structure with the chosen cross-section and amount of prestressing steel, then the requirements for shear stress, stirrups, and ultimate moment capacity can be readily met with minor or no modifications in the cross-section. For example, girder webs can be thickened locally near piers to reduce excessive shear stress.

In the AASHTO formulas for allowable tensile stress in concrete, bonded reinforcement should be interpreted to mean bonded auxiliary (nonprestressed) reinforcement in conformity with Article 8.6 of the 2002 ACI Code for Analysis and Design of Reinforced Concrete Bridge Structures. The refined estimate for computing time-dependent losses in steel stress given in the code shall be used. To

minimize concrete cracking and protect reinforcing steel against corrosion for bridges, the allowable concrete stress under final conditions in the precompressed tensile zone shall be limited to zero in the top and bottom fibers as shown in Figure 5.8.2-1.

In all cases where tension is allowed in the concrete under initial or final conditions, extra mild steel (auxiliary reinforcement) shall be added to carry the total tension present. This steel can be computed as described in Chapter 9-5 of Reference[18].

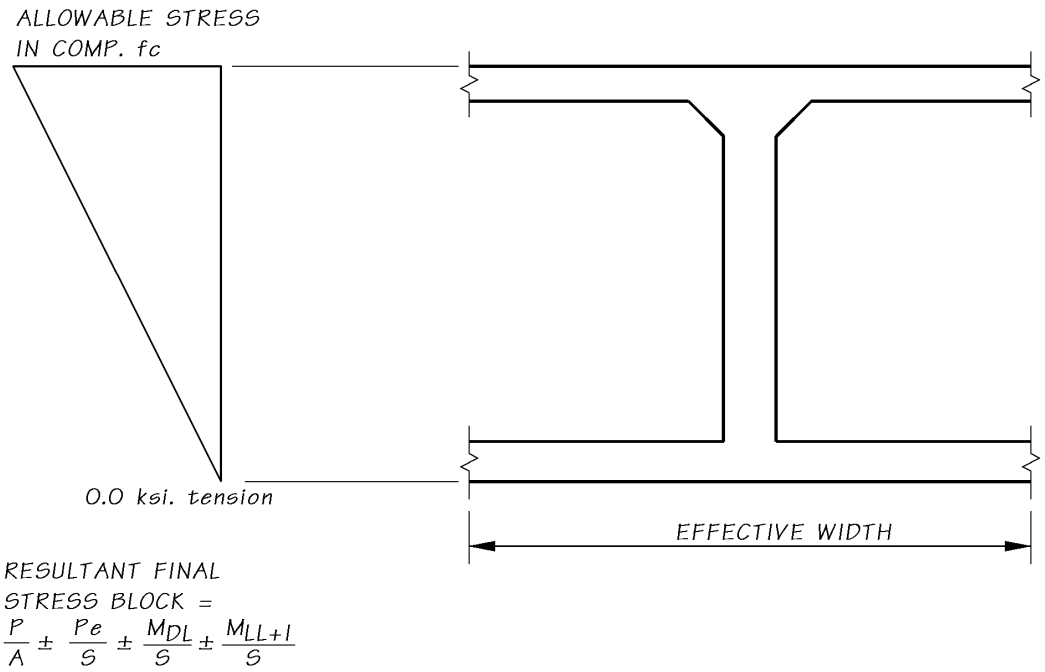

Box Girder Stresses
Figure 5.8.2-1

In case of overstress, try one or more of the following remedies: adjust tendon profiles, add or subtract prestress steel, thicken slabs, revise strength of concrete of top slab, add more short tendons locally, etc.

D. **Camber –**The camber to be shown on the plans shall include the effect of both dead load and final prestress and may be taken as given in Table 5.2.4-1.

E. **Expansion Bearing Offsets –** Figure 5.8.1-4 indicates expansion bearing offsets for the partial effects of elastic shortening, creep, and shrinkage. The initial offset shown is intended to result in minimal bearing eccentricity for the majority of the life of the structure. The bearing shall be designed for the full range of anticipated movements: *ES+CR+SH+TEMP*.

5.8.3 Post-tensioning

A. **Tendon Layout –** After a preliminary estimate has been made of the concrete section and the amount of prestressing needed at points of maximum applied load, it may be advantageous in multispan bridges to draw a tendon profile to a convenient scale superimposed on a plot of the center of gravity of concrete (c.g.c.) line. The most efficient tendon profile from the standpoint of steel stress loss will normally be a series of rather long interconnected parabolas, but other configurations are possible. For continuous bridges with unequal span lengths, the tendon profile (eccentricity) shall be based on the span requirement. This results in an efficient post-tensioning design. The tendon profile and c.g.c. line plot is strongly recommended for superstructures of variable cross-section and/or multiple unsymmetrical span arrangements, but is not necessary for superstructures having constant cross-section and symmetrical spans. The main advantages of the tendon profile and c.g.c. plot are:

1. The primary prestress moment curves (prestress force times distance from c.g.c. line to center of gravity of steel (c.g.s.) lines) at all points throughout all spans are quickly obtained from this plot and will be used to develop the secondary moment curves (if present) and, ultimately, to develop the resultant total prestress moment curve.
2. Possible conflicts between prestressing steel and mild steel near end regions, crossbeams, and diaphragms may become apparent.
3. Possible design revisions may be indicated. For example, camber in bridges with unequal spans can be balanced by adjusting tendon profiles.

   The tendon profile and c.g.c. line diagram shall also contain a sketch of how the end bearing plates or anchors are to be arranged at the ends of the bridge. Such a sketch can be useful in determining how large the end block in a girder bridge will have to be and how much space will be required for mild steel in the end region. In general, the arrangement of anchor plates should be the same as the arrangement of the ducts to which they belong to avoid problems with duct cross-overs and to keep end blocks of reasonable width.

B. **Prestress Losses –** Prestress losses shall be as indicated in Section 5.1.4.

C. **Jacking End –** Effective prestressing force in design of post-tensioned bridges depends on the accumulation of friction losses due to the horizontal and vertical curvature of the tendons as well as the curvature of the bridge. Although jacking ends of post-tensioned bridges is important to achieve more effective design, consideration shall be given to the practicality of jacking during construction. The following general stressing guidelines shall be considered in specifying jacking end of post-tensioned bridges.

   - All simple or multiple span CIP or precast concrete bridges with total length of less than 350′ shall be stressed from one end only.
   - All CIP or precast concrete post tensioned bridges with total length between 350′ to 600′. may be stressed from one end or both ends if greater friction losses due to vertical or horizontal curvature are justified by the designer.
   - All CIP or precast concrete bridges with total length of greater than 600′ shall be stressed from both ends.

   When stressing tendons from both ends or when alternating a single pull from both ends (half tendons pulled from one end with the other half pulled from the other end), all tendons shall be stressed on one end before all tendons are stressed on the opposite end.

   Stressing at both ends shall preferably be done on alternate tendons, and need not be done simultaneously on the same tendon. In rare cases, tendons can be stressed from both ends to reduce large tendon losses but is undesirable due to worker safety issues and a reduction in stressing redundancy.

D. **Steel Stress Curve** – Steel stresses may be plotted either as the actual values or as a percentage of the jacking stresses. A steel stress diagram for a typical two-span bridge is shown in Figure 5.8.3-1. Spans are symmetrical about pier 2 and the bridge is jacked from both ends.

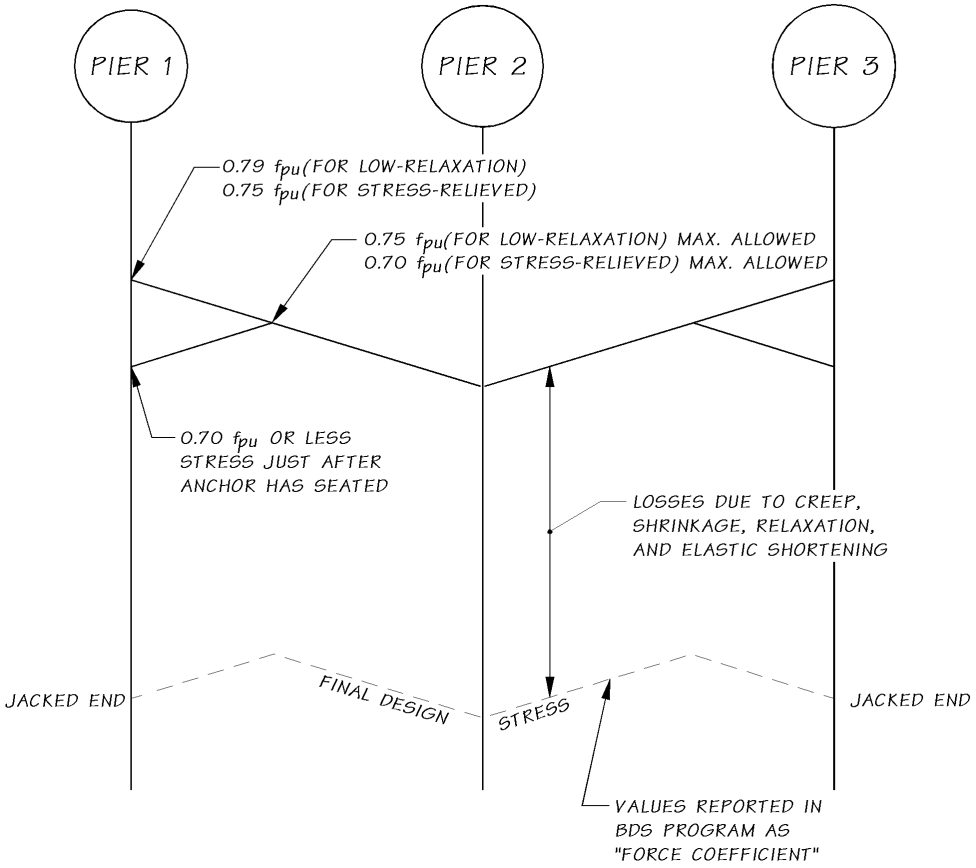

Stress Diagram for a 2-Span PT Bridge
Figure 5.8.3-1

Accurate plotting of steel stress variation due to local curvature is normally not necessary, and straight lines between intersection points on the diagram as shown in Figure 5.8.3-1 are usually sufficient. When tendons are continuous through the length of the bridge, the stress for design purposes at the jacked end shall be limited to $0.75f_{pu}$ or 202 ksi for 270 ksi stress relieved strands or $0.79f_{pu}$ or 213 ksi for 270 ksi low relaxation strands. This would permit the post-tensioning contractor to jack to the slightly higher value of $0.77f_{pu}$ for stress relieved strands or $0.81f_{pu}$ for low relaxation strands as allowed by the AASHTO LRFD Specifications in case friction values encountered in the field turn out somewhat greater than the standard values used in design. Stress loss at jacked end shall be calculated from the assumed anchor set of ⅜″, the normal slippage during anchoring in most systems. At the high points on the initial stress curve, the stress shall not exceed $0.70f_{pu}$ for stress relieved strands or $0.75f_{pu}$ low relaxation strands after sealing of anchorage. If these values are exceeded, the jacking stress can be lowered or alternately the specified amount of anchor set can be increased.

When the total tendon length (L) is less than the length of cable influenced by anchor set (x) and the friction loss is small, as in short straight tendons, the $0.70f_{pu}$ value governs. In these cases, the maximum allowable jacking stress value of $0.75f_{pu}$ for stress relieved or $0.78f_{pu}$ for low relaxation strands cannot be used and a slightly lower value shall be specified as shown in Figure 5.8.3-2.

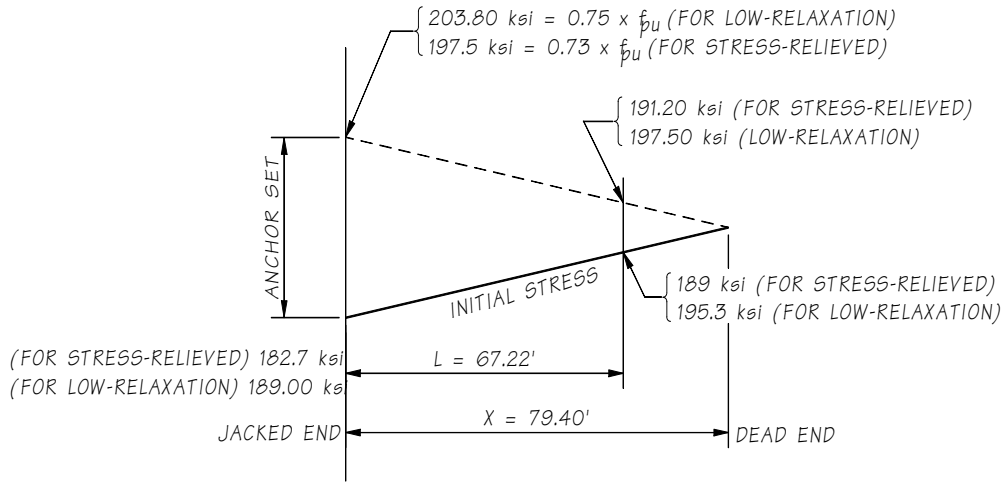

Stress Diagram at Jacking End
Figure 5.8.3-2

In single-span, simply supported superstructures friction losses are so small that jacking from both ends is normally not warranted. In the longer multispan bridges where the tendons experience greater friction losses, jacking from both ends will usually be necessary. Jacking at both ends need not be done simultaneously, since final results are virtually the same whether or not the jacking is simultaneous. If unsymmetrical two-span structures are to be jacked from one end only, the jacking must be done from the end of the longest span.

The friction coefficient for post-tensioning tendons in rigid and semi-rigid galvanized metal sheathing shall be taken as shown in Table 5.8.3-1.

Tendon Length	μ
500 ft or less	0.15
Over 500 ft to 750 ft	0.20
Over 750 ft to 1,000 ft	0.25

Friction Coefficients for Post-tensioning Tendons
Table 5.8.3-1

For tendon lengths greater than 1,000 feet, investigation is warranted on current field data of similar length bridges for appropriate values of μ.

E. **Flexural Stress in Concrete** – Stress at service load levels in the top and bottom fibers of prestressed members shall be checked for at least two conditions that will occur in the lifetime of the members. The initial condition occurs just after the transfer of prestress when the concrete is relatively fresh and the member is carrying its own dead load. The final condition occurs after all the prestress losses when the concrete has gained its full ultimate strength and the member is carrying dead load and live load. For certain bridges, other intermediate loading conditions may have to be checked, such as when prestressing and falsework release are done in stages and when special construction loads have to be carried, etc. The concrete stresses shall be within the AASHTO LRFD Specification allowable except as amended in Section 5.2.1.

In single-span simply supported superstructures with parabolic tendon paths, flexural stresses at service load levels need to be investigated at the span midpoint where moments are maximum, at points where the cross-section changes, and near the span ends where shear stress is likely to be maximum (see Section 5.8.4 Shear). For tendon paths other than parabolic, flexural stress shall be investigated at other points in the span as well.

In multispan continuous superstructures, investigate flexural stress at points of maximum moment (in the negative moment region of box girders, check at the quarter point of the crossbeam), at points where the cross section changes, and at points where shear is likely to be maximum. Normally, mild steel should not be used to supplement the ultimate moment capacity. It may be necessary, however, to determine the partial temperature and shrinkage stresses that occur prior to post-tensioning and supply mild steel reinforcing for this condition.

In addition, maximum and minimum steel percentages and cracking moment shall be checked. See Section 2.3.8 of Reference[17].

F. **Prestress Moment Curves**

1. **Single-Span Bridges, Simply Supported –** The primary prestress moment curve is developed by multiplying the initial steel stress curve ordinates by the area of prestressing steel times the eccentricity of steel from the center of gravity of the concrete section at every tenth point in the span. The primary prestress moment curve is not necessary for calculating concrete stresses in single-span simply supported bridges. Since there is no secondary prestress moment developed in the span of a single span, simply supported bridge which is free to shorten, the primary prestress moment curve is equal to the total prestress moment curve in the span. However, if the single span is rigidly framed to supporting piers, the effect of elastic shortening shall be calculated. The same would be true when unexpected high friction is developed in bearings during or after construction.

2. **Multispan Continuous Bridges –** With the exception of T.Y. Lin's equivalent vertical load method used in conjunction with the STRUDL program, none of the methods described in the following section take into account the elastic shortening of the superstructure due to prestressing. To obtain the total prestress moment curve used to check concrete stresses, the primary and secondary prestress moment curves must be added algebraically at all points in the spans. As the secondary moment can have a large absolute value in some structures, it is very important to obtain the proper sign for this moment, or a serious error could result.

   A discussion of methods for calculating secondary prestress moments follows:

3. **WSDOT BEAMDEF Program –** If the primary prestress moment values at tenth points are coded into this program, span stiffness factors, carry-overs, and fixed-end moments will be obtained. Distribution of the fixed-end moments in all spans will yield the secondary moments at all piers. The secondary moments will be zero at simply supported span ends and cantilevers.

   a. **Equivalent Vertical Load –** See discussion in Section 5.8.2 of this manual.

   b. **Table of Influence Lines –** See Appendix A.1 of Reference[17] for a discussion. This method is similar to T. Y. Lin's equivalent vertical load method and is a relatively quick way to manually compute prestress moments in bridges of up to five spans. Since the secondary moment effect due to vertical support reactions is included in the coefficients listed in the tables, the support moment computed is the total moment at that point.

   c. **Slope Deflection –** See Section 2.5 of Reference[17] for a discussion. The method, though straightforward, is time consuming.

G. **Partial prestressing –** Partial prestressing is not allowed in WSDOT bridge designs. However, mild reinforcement could be added to satisfy the ultimate flexural capacity under factored loads if following requirements are satisfied:

1. Allowable stresses, as specified in this manual for Service-I and Service-III limit states, shall be satisfied with post-tensioning only. The zero-tension policy remains unchanged.
2. Additional mild reinforcement could be used if the ultimate flexural capacity cannot be met with the prestressing provided for service load combinations. The mild reinforcement is filling the gap between the service load and ultimate load requirements. This should be a very small amount of mild reinforcement since adequate post-tensioning is already provided to satisfy the service load requirement for dead load and live loads.
3. If mild reinforcement added, the resistance factor for flexural design shall be adjusted per AASHTO LRFD 5.5.4.2.1 to account for the effect of partial prestressing.
4. If mild reinforcement added, the section will still be considered uncracked and requirements for crack control, and side skin reinforcement do not apply.

5.8.4 Shear and Anchorages

A. **Shear Capacity –** Concrete box girder and T-beam bridges with horizontal construction joints (which result from webs and slabs being cast at different times) shall be checked for both vertical and horizontal shear capacity. Generally, horizontal shear requirements will control the stirrup design.

Vertical concrete shear capacity for prestressed or post-tensioned structural members is calculated per AASHTO LRFD 5.8.3. Minimum stirrup area and maximum stirrup spacing are subject to the limitations presented in AASHTO LRFD 5.8.2.5 and 5.8.2.7. For further explanation, refer to Section 11.4 of the ACI 318-02 Building Code Requirements for Reinforced Concrete and Commentary. Chapter 27 of Notes on ACI 318-02 Building Code Requirements for Reinforced Concrete with Design Applications presents two excellent example problems for vertical shear design.

B. **Horizontal Shear –** Horizontal shear stress acts over the contact area between two interconnected surfaces of a composite structural member. AASHTO LRFD 5.8.4 shall be used for shear-friction design.

C. **End Block Stresses –** The highly concentrated forces at the end anchorages cause bursting and spalling stresses in the concrete which must be resisted by reinforcement. For a better understanding of this subject, see Chapter 7 of Reference[18 and 19], and Section 2.82 of Reference[17].

Note that the procedures for computing horizontal bursting and spalling steel in the slabs of box girders and T-beams are similar to those required for computing vertical steel in girder webs, except that the slab steel is figured in a horizontal instead of a vertical plane. In box girders, this slab steel should be placed half in the top slab and half in the bottom slab. The anchorage zones of slab bridges will require vertical stirrups as well as additional horizontal transverse bars extending across the width of the bridge. The horizontal spalling and bursting steel in slab bridges shall be placed half in a top layer and half in a bottom layer.

D. **Anchorage Stresses –** The average bearing stress on the concrete behind the anchor plate and the bending stress in the plate material shall satisfy the requirements of the AASHTO LRFD Specification. In all sizes up to the 31-strand tendons, the square anchor plates used by three suppliers (DSI, VSL, AVAR, Stronghold) meet the AASHTO requirements, and detailing end blocks to accommodate these plates is the recommended procedure. In the cases where nonstandard (rectangular) anchor plates must be specified because of space limitations, assume that the trumpet associated with the equivalent size square plate will be used. In order to calculate the net bearing plate area pressing on the concrete behind it, the trumpet size can be scaled from photos in supplier brochures. Assume for simplicity that the concrete bearing stress is uniform. Bending stress in the steel should be checked assuming bending can occur across a corner of the plate or across a line parallel to its narrow edge. See Appendix 5-B2 for preapproved anchorages for post-tensioning.

E. **Anchorage Plate Design –** The design and detailing of anchorage block in CIP post-tensioned box girders shall be based on single plane anchorage device. Multi-plane anchorage, however, could be used if stacking of single plane anchorage plates within the depth of girder is geometrically not possible. Anchorage plates shall not extend to top and bottom slab of box girders. If multi-plane anchorage is used, it shall be specified in the contract plans and bridge special provisions.

5.8.5 Temperature Effects

Most specifications for massive bridges call for a verification of stresses under uniform temperature changes of the total bridge superstructure. Stresses due to temperature unevenly distributed within the cross-section are not generally verified. In reality, however, considerable temperature gradients are set up within the cross-section of superstructures. Such temperature differences are mostly of a very complex nature, depending on the type of cross-section and direction of solar radiation [20].

Solar radiation produces uniform heating of the upper surface of a bridge superstructure which is greater than that of the lower surface. An inverse temperature gradient with higher temperatures at the lower surface occurs rarely and involves much smaller temperature differences. In statically indeterminate continuous bridge beams, a temperature rise at the upper surface produces positive flexural moments which cause tensile stresses in the bottom fibers. When the temperature gradient is constant over the entire length of a continuous beam superstructure, positive flexural moments are induced in all spans. These moments are of equal constant magnitude in the interior spans and decrease linearly to zero in the end spans. The most critical zones are those which have the lowest compressive stress reserve in the bottom fibers under prestress plus dead load. Normally, these are the zones near the interior supports where additional tensile stresses develop in the bottom fibers due to

- A concentrated support reaction, and
- Insufficient curvature of prestressed reinforcement.

Studies have shown that temperature is the most important tension-producing factor, especially in two-span continuous beams in the vicinity of intermediate supports, even when the temperature difference is only 10°C between the deck and bottom of the beam. In practice, a box girder can exhibit a ΔT=30°C. The zone at a distance of about 0.3 to 2.0d on either side of the intermediate support proved to be particularly crack-prone.

Computation of stresses induced by vertical temperature gradients within prestressed concrete bridges can become quite complex and are ignored in typical designs done by WSDOT. It is assumed that movements at the expansion devices will generally relieve any induced stresses. However, such stresses can be substantial in massive, deep bridge members in localities with large temperature fluctuations. If the structure being designed falls within this category, a thermal stress investigation shall be considered. See Reference[17] and the following temperature criteria for further guidance.

1. A mean temperature 50°F with rise 45°F and fall 45°F for longitudinal analysis using one-half of the modulus of elasticity. (Maximum Seasonal Variation.)
2. The superstructure box girder shall be designed transversely for a temperature differential between inside and outside surfaces of ±15°F with no reduction in modulus of elasticity (Maximum Daily Variation).
3. The superstructure box girder shall be designed longitudinally for a top slab temperature increase of 20°F with no reduction in modulus of elasticity. (In accordance with Post-tensioning Institute Manual, Precast Segmental Box Girder Bridge Manual, Section 3.3.4.)

5.8.6 Construction

A. **General –** Construction plans for conventional post-tensioned box girder bridges include two different sets of drawings. The first set (contract plans) is prepared by the design engineer and the second set (shop plans) is prepared by the post-tensioning materials supplier (contractor).

B. **Contract Plans –** The contract plans shall be prepared to accommodate any post-tensioning system, so only prestressing forces and eccentricity should be detailed. The concrete sections shall be detailed so that available systems can be installed. Design the thickness of webs and flanges to facilitate concrete placement. Generally, web thickness for post-tensioned bridges shall be at least 12″.

C. **Shop Plans –** The shop plans are used to detail, install, and stress the post-tensioning system selected by the Contractor. These plans must contain sufficient information to allow the engineer to check their compliance with the contract plans. These plans must also contain the location of anchorages, stressing data, and arrangement of tendons.

D. **Review of Shop Plans for Post-tensioned Girder –** Post-tensioning shop drawings shall be reviewed by the designer (or Bridge Technical Advisor for non-Bridge Office projects) and consulted with the Concrete Specialist if needed. Review of shop drawing shall include:

1. All post-tensioning strands shall be of ½″ or 0.6″ diameter grade 270 low relaxation uncoated strands.
2. Tendon profile and tendon placement patterns.
3. Duct size shall be based on the duct area at least 2.5 times the total area of prestressing strands.
4. Anchor set shall conform to the contract plans. The post-tensioning design is typically based on an anchor set of ⅜″.
5. Maximum number of strands per tendon shall not exceed (37) ½″ diameter strands or (27) 0.6″ diameter strands per *Standard Specifications* 6-02.3(26)F.
6. Jacking force per web.
7. Prestress force after anchor set (lift-off force).
8. Number of strands per web.
9. Anchorage system shall conform to pre-approved list of post-tensioning system per Appendix 5-B. The anchorage assembly dimensions and reinforcement detailing shall conform to the corresponding post-tensioning catalog.
10. The curvature friction coefficient and wobble friction coefficient. The curvature friction coefficient of $\mu = 0.15$ for bridges less than 400 feet, $\mu = 0.2$ for bridges between 400 feet and 800 feet, and $\mu = 0.25$ for bridges longer than 800 feet. The wobble friction coefficient of $k = 0.0002$/ft is often used. These coefficients may be revised by the post-tensioning supplier if approved by the design engineer and conform to the *Standard Specifications* 6.02.3(26)G.
11. Post-tensioning stressing sequence.
12. Tendon stresses shall not exceed as specified per Figure 5.8.3-2:
    1. $0.80 f_{pu}$ at anchor ends immediately before seating.
    2. $0.70 f_{pu}$ at anchor ends immediately after seating.
    3. $0.74 f_{pu}$ at the end point of length influenced by anchor set.

13. Elongation calculations for each jacking operation shall be verified. If the difference in tendon elongation exceeds 2%, the elongation calculations shall be separated for each tendon per *Standard Specifications* 6-02.3(26) A.
14. Vent points shall be provided at all high points along tendon.
15. Drain holes shall be provided at all low points along tendon.
16. The concrete strength at the time of post-tensioning, f'_{ci} shall not be less than 4,000 psi per *Standard Specifications* 6-02.3(26)G. Different concrete strength may be used if specified in the contract plans.
17. Concrete stresses at the anchorage shall be checked per *Standard Specifications* 6-02.3(26)C for bearing type anchorage. For other type of anchorage assemblies, if not covered in the Appendix 5-B2 for pre-approved list of post-tensioning system, testing per *Standard Specifications* 6-02.3(26)D is required.

E. **During Construction**

1. If the measured elongation of each strand tendon is within ± 7% of the approved calculated elongation, the stressed tendon is acceptable.
2. If the measured elongation is greater than 7%, force verification after seating (lift-off force) is required. The lift-off force shall not be less than 99% of the approved calculated force nor more than 70% $f_{pu} A_s$.
3. If the measured elongation is less than 7%, the bridge construction office will instruct the force verification.
4. One broken strand per tendon is usually acceptable. (Post-tensioning design shall preferably allow one broken strand). If more than one strand per tendon is broken, the group of tendon per web should be considered. If the group of tendons in a web is under-stressed, then the adequacy of the entire structure shall be investigated by the designer and consulted with the Bridge Construction Office.
5. Failed anchorage is usually taken care of by the Bridge Construction Office.
6. Over or under elongation is usually taken care of by the Bridge Construction Office.
7. In case of low concrete strength the design engineer shall investigate the adequacy of design with lower strength.
8. Other problems such as unbalanced and out of sequence post-tensioning, strands surface condition, strand subjected to corrosion and exposure, delayed post-tensioning due to mechanical problems, Jack calibration, etc. should be evaluated per case-by-case basis and are usually taken care by Bridge Construction Office.

5.8.7 Post-tensioning Notes — Cast-in-place Girders

A. **General –** The design plans shall contain the following information for use by the post-tensioned and state inspector: Tendon jacking sequence, friction coefficients, duct type, elastic and time-dependent losses, anchor set, prestress forces, strand elongations, falsework construction and removal. If jacking is done at both ends of the bridge, the minimum strand elongation due to the specified jacking load for the end jacked first as well as the end jacked last shall be indicated. The calculated strand elongations at the ends of the bridge are compared with the measured field values to ensure that the friction coefficients (and hence the levels of prestressing throughout the structure) agree with the values assumed by the designer.

The tendons shall be jacked in a sequence that avoids causing overstress or tension in the bridge.

The standard post-tensioning notes for the sequence of stressing of longitudinal tendons shall be shown in the Contract Plans.

5.9 Spliced Precast Girders

5.9.1 Definitions

The provisions herein apply to precast girders fabricated in segments that are spliced longitudinally to form the girders in the final structure. The cross-section for this type of bridge is typically composed of bulb tee girders or trapezoidal tub girders with a composite CIP deck. WSDOT standard drawings for spliced I-girders are shown in Appendices 5.9-A1 through 5.9-A3, and for spliced-tub girders are shown in Appendices 5.9-A4 and 5.9-A5. Span capabilities of precast spliced girders are shown in Appendices 5.6-A1-8 for I-girders and 5.6-A1-9 for trapezoidal tub girders.

Precast deck bulb tee girder bridges may also be fabricated in segments and spliced longitudinally. Splicing in this type of girder may be beneficial because the significant weight of the cross-section may exceed usual limits for handling and transportation. Spliced structures of this type, which have longitudinal joints in the deck between each deck girder, shall comply with the additional requirements of AASHTO LRFD 5.14.4.3.

Spliced precast girder bridges may be distinguished from what is referred to as "segmental construction" in bridge specifications by several features which typically include:

- The lengths of some or all segments in a bridge are a significant fraction of the span length rather than having a number of segments in each span.
- Design of joints between girder segments at the service limit state does not typically govern the design for the entire length of the bridge for either construction or for the completed structure.
- Wet-cast closure joints are usually used to join girder segments rather than match-cast joints.
- The bridge cross-section is composed of girders with a CIP concrete composite deck rather than precasting the full width and depth of the superstructure as one piece. In some cases, the deck may be integrally cast with each girder. Connecting the girders across the longitudinal joints completes a bridge of this type.
- Girder sections are used, such as bulb tee, deck bulb tee or trapezoidal tub girders, rather than closed cell boxes with wide monolithic flanges.
- Provisional ducts are required for segmental construction to provide for possible adjustment of prestress force during construction. Similar requirements are not given for spliced precast girder bridges because of the redundancy provided by a greater number of webs and tendons, and typically lower friction losses because of fewer joint locations.
- The method of construction and any required temporary support is of paramount importance in the design of spliced precast girder bridges. Such considerations often govern final conditions in the selection of section dimensions and reinforcing and/or prestressing.

All supports required prior to the splicing of the girder shall be shown on the contract documents, including elevations and reactions. The stage of construction during which the temporary supports are removed shall also be shown on the contract documents. Stresses due to changes in the structural system, in particular the effects of the application of load to one structural system and its removal from a different structural system, shall be accounted for. Redistribution of such stresses by creep shall be taken into account and allowance shall be made for possible variations in the creep rate and magnitude.

Prestress losses in spliced precast girder bridges shall be estimated using the provisions of Section 5.1.4. The effects of combined pretensioning and post-tensioning and staged post-tensioning shall be considered. When required, the effects of creep and shrinkage in spliced precast girder bridges shall be estimated using the provisions of Section 5.1.1.

5.9.2 WSDOT Criteria for Use of Spliced Girders

See Section 5.6.3.D.3 for criteria on providing an alternate spliced-girder design for long span one-piece pretensioned girders.

5.9.3 Girder Segment Design

A. **Design Considerations –** Stress limits for temporary concrete stresses in girder segments before losses and stress limits for concrete stresses in girder segments at the service limit state after losses specified in Section 5.1.3 shall apply at each stage of pretensioning or post-tensioning with due consideration for all applicable loads during construction. The concrete strength at the time the stage of prestressing is applied shall be substituted for f'_{ci} in the stress limits.

The designer shall consider requirements for bracing of the girder segments once they have been erected on the substructure. Any requirements for temporary or permanent bracing during subsequent stages of construction, along with the contractor's responsibilities for designing and placing them, shall be specified in the contract documents.

Effects of curved tendons shall be considered per Section 5.8.1.F.

B. **Post-tensioning –** Post-tensioning may be applied either before and/or after placement of deck concrete. Part of the post-tensioning may be applied prior to placement of the deck concrete, with the remainder placed after deck concrete placement. In the case of multi-stage post-tensioning, ducts for tendons to be tensioned before the deck slab concrete shall not be located in the deck slab.

All post-tensioning tendons shall be fully grouted after stressing. Prior to grouting of post-tensioning ducts, gross cross-section properties shall be reduced by deducting the area of ducts and void areas around tendon couplers.

Where some or all post-tensioning is applied after the deck concrete is placed, fewer post-tensioning tendons and a lower concrete strength in the closure joint may be required. However, deck replacement, if necessary, is difficult to accommodate with this construction sequence. Where all of the post-tensioning is applied before the deck concrete is placed, a greater number of post-tensioning tendons and a higher concrete strength in the closure joint may be required. However, in this case, the deck can be replaced if necessary.

5.9.4 Joints Between Segments

A. **General –** Cast-in-place closure joints are typically used in spliced girder construction. The sequence of placing concrete for the closure joints and deck shall be specified in the contract documents. Match-cast joints shall not be specified for spliced girder bridges unless approved by the Bridge Design Engineer. Prestress, dead load, and creep effects may cause rotation of the faces of the match-cast joints prior to splicing. If match cast joint is specified, the procedures for splicing the girder segments that overcome this rotation to close the match-cast joint shall be shown on the contract plans.

B. **Location of Closure Joints –** The location of intermediate diaphragms shall be offset by at least 2′-0″ from the edge of cast-in-place closure joints. The intent of the joint width requirement is to allow proper compaction of concrete in the CIP closure joint. A longer closure joint may be used to provide more room to accommodate tolerances for potential misalignment of ducts within girder segments and misalignment of girder segments at erection.

In horizontally curved spliced girder bridges, intermediate diaphragms could be located at the CIP closure joints if straight segments are spliced with deflection points at closures. In this case, diaphragm could be extended beyond the face of exterior girder for improved development of diaphragm reinforcement.

C. **Details of Closure Joints –** The length of a closure joint between precast concrete segments shall allow for the splicing of steel whose continuity is required by design considerations and the accommodation of the splicing of post-tensioning ducts. The length of a closure joint shall not be less than 2′-0″.

Web reinforcement within the joint shall be the larger of that in the adjacent girders. The face of the precast segments at closure joints shall be specified as intentionally roughened surface.

Concrete cover to web stirrups at the CIP closures of pier diaphragms shall not be less than 2½″. If intermediate diaphragm locations coincide with CIP closures between precast segments, then the concrete cover at the CIP closures shall not be less than 2½″. This increase in concrete cover is not necessary if intermediate diaphragm locations are away from the CIP closures. See Figures 5.9.4-1 to 5.9.4-3 for details of closure joints.

Adequate reinforcement shall be provided to confine tendons at CIP closures and at intermediate pier diaphragms. The reinforcement shall be proportioned to ensure that the steel stress during the jacking operation does not exceed 0.6_{fy}.

The clear spacing between ducts at CIP closures of pier diaphragms shall be 2.0″ minimum. The duct diameter for WSDOT standard spliced girders shall not exceed 4.0″ for spliced I-girders and 4½″ for spliced tub girders.

On the construction sequence sheet indicate that the side forms at the CIP closures and intermediate pier diaphragms shall be removed to inspect for concrete consolidation prior to post-tensioning and grouting.

D. **Joint Design –** Stress limits for temporary concrete stresses in joints before losses specified in Section 5.1.3 shall apply at each stage of post-tensioning. The concrete strength at the time the stage of post-tensioning is applied shall be substituted for f'_{ci} in the stress limits.

Stress limits for concrete stresses in joints at the service limit state after losses specified in Section 5.1.3 shall apply. These stress limits shall also apply for intermediate load stages, with the concrete strength at the time of loading substituted for f'_c in the stress limits. The compressive strength of the closure joint concrete at a specified age shall be compatible with design stress limitations.

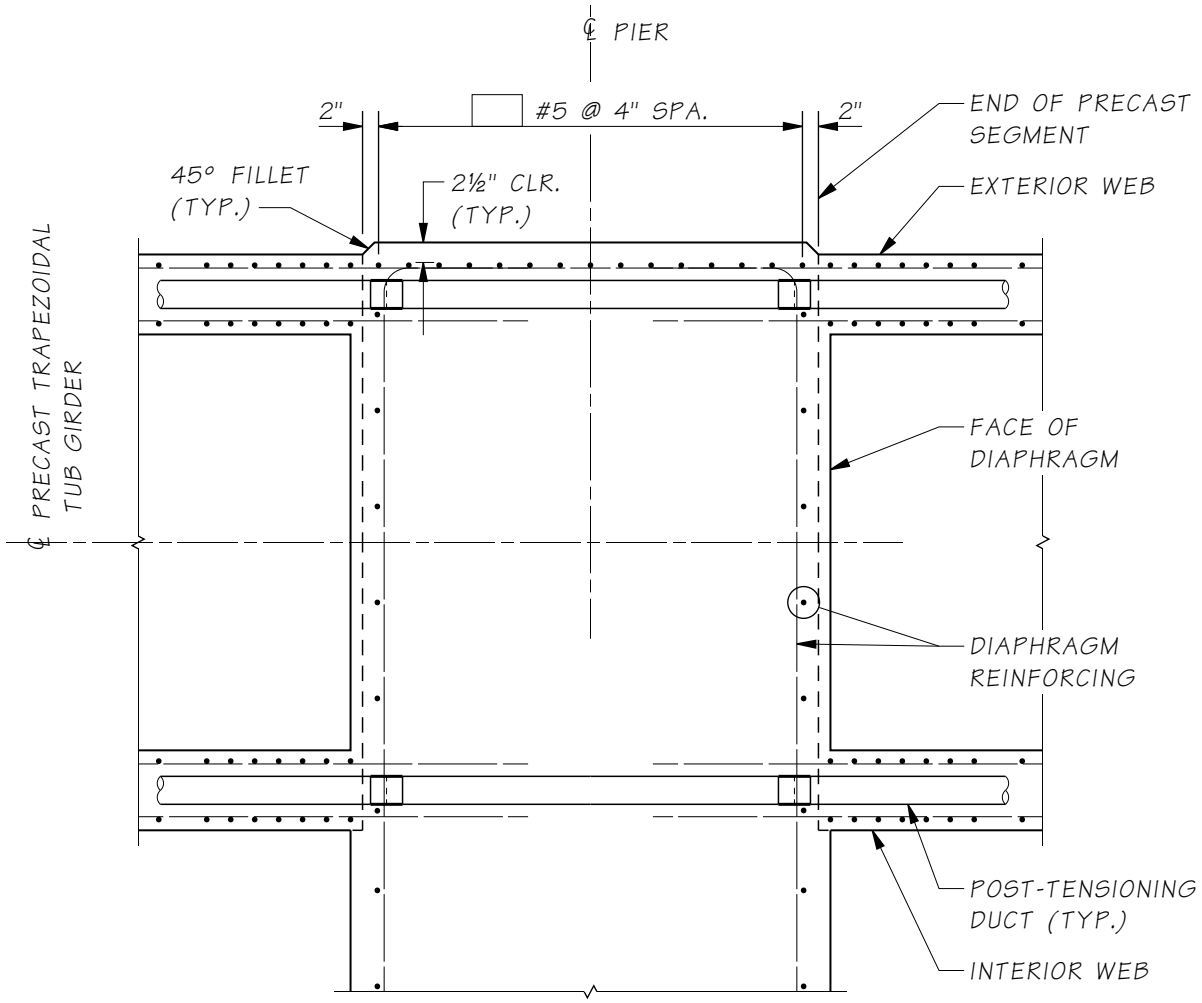

CIP Closure at Pier Diaphragm
Figure 5.9.4-1

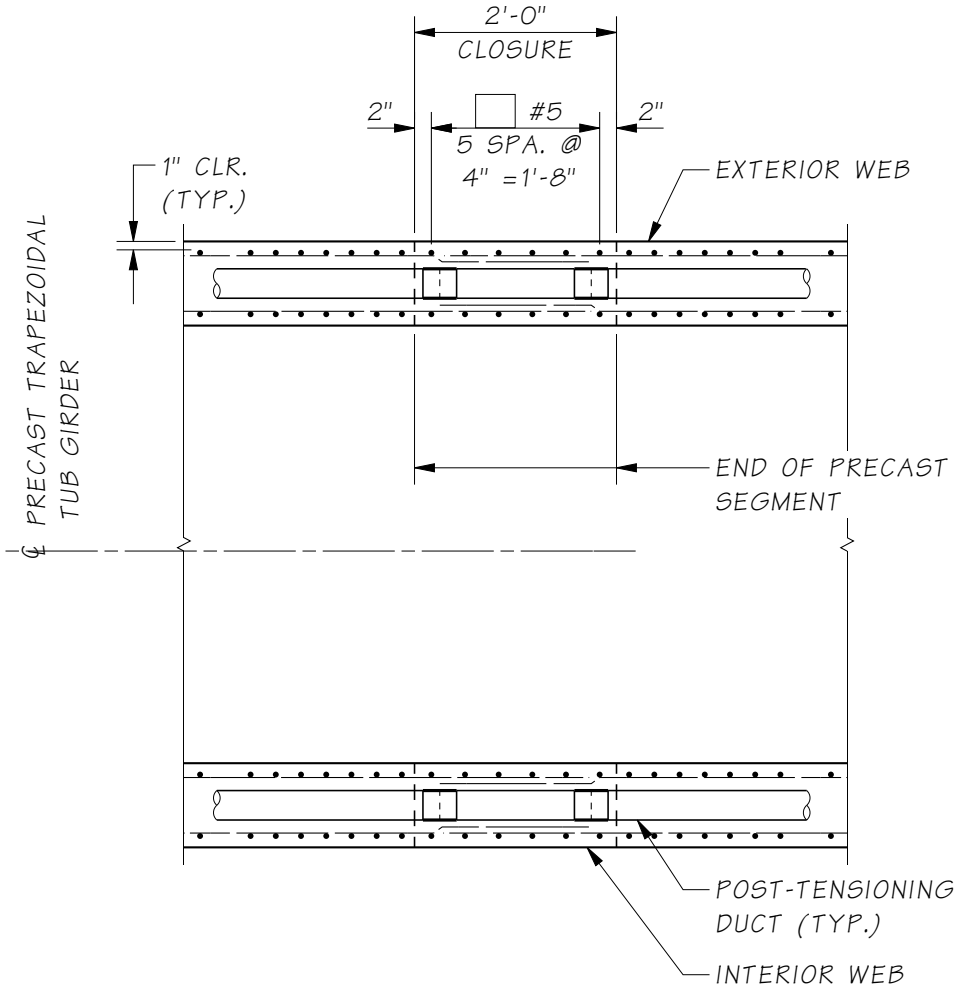

CIP Closure Away from Intermediate Diaphragm

Figure 5.9.4-2

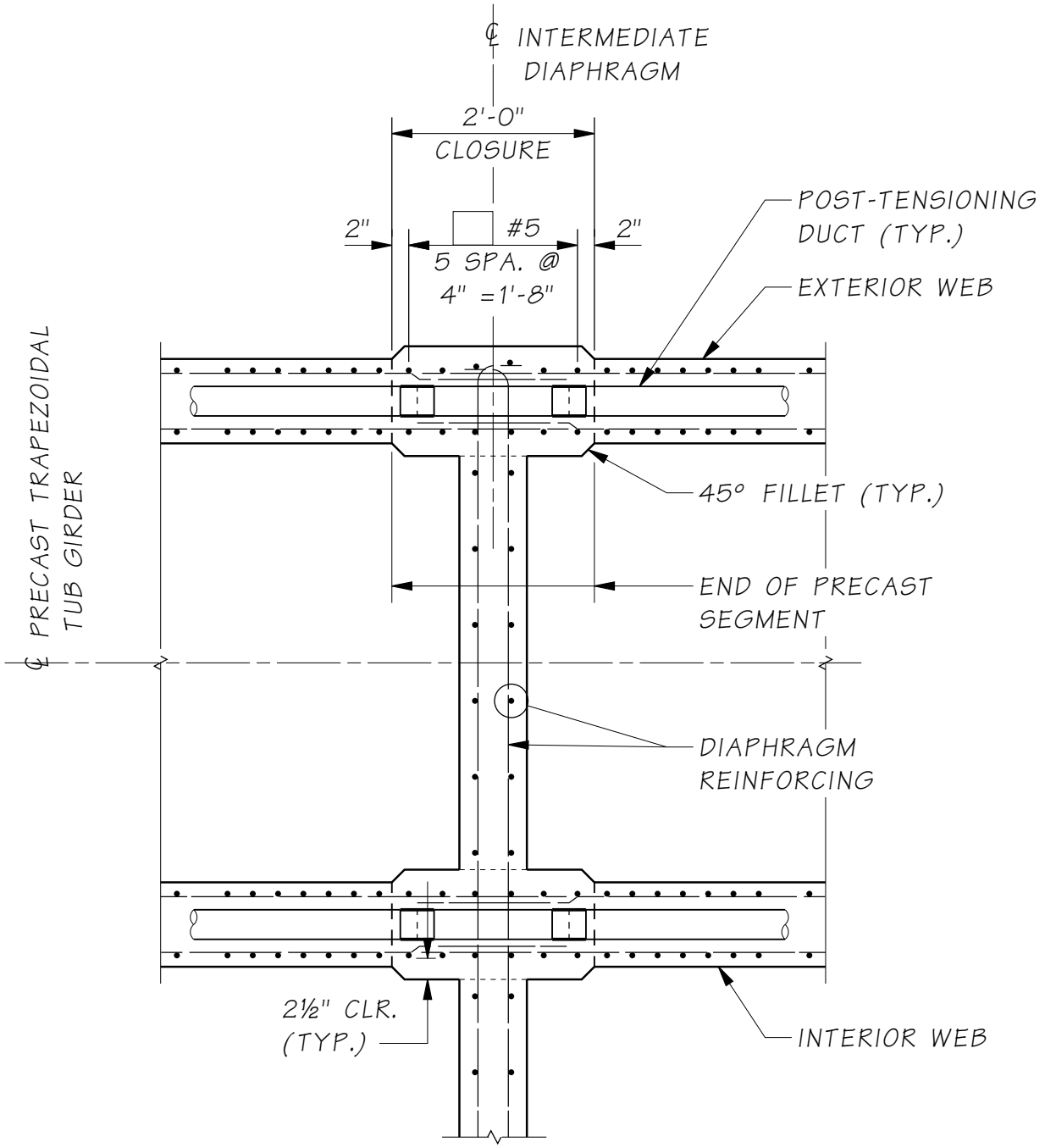

CIP Closure at Intermediate Diaphragm
Figure 5.9.4-3

5.9.5 Review of Shop Plans for Precast Post-tensioned Spliced-girders

Shop drawings for precast post-tensioned spliced-girders shall be reviewed by the designer (or Bridge Technical Advisor for non-Bridge Office projects) and consulted with the Concrete Specialist if needed. Review of shop drawing shall include:

1. All prestressing strands shall be of ½″ or 0.6″ diameter grade 270 low relaxation uncoated strands.
2. Number of strands per segment.
3. Pretensioning strands jacking stresses shall not exceed $0.75f_{pu}$.
4. Strand placement patterns.
5. Temporary strand placement patterns, location and size of blockouts for cutting strands.
6. Procedure for cutting temporary strands and patching the blockouts shall be specified.
7. Number and length of extended strands and rebars at girder ends.
8. Location of holes and shear keys for intermediate and end diaphragms.
9. Location and size of bearing recesses.
10. Saw tooth at girder ends.
11. Location and size of lifting loops or lifting bars.
12. Number and size of horizontal and vertical reinforcement.
13. Segment length and end skew.
14. Tendon profile and tendon placement pattern.
15. Duct size shall be based on the duct area at least 2.5 times the total area of prestressing strands.
16. Anchor set. The post-tensioning design is typically based on an anchor set of ⅜″.
17. Maximum number of strands per tendon shall not exceed (37) ½″ diameter strands or (27) 0.6″ diameter strands per *Standard Specifications* 6-02.3(26)F.
18. Jacking force per girder.
19. Prestress force after anchor set (lift-off force).
20. Number of strands per web.
21. Anchorage system shall conform to pre-approved list of post-tensioning system per Appendix 5-B4 of this manual. The anchorage assembly dimensions and reinforcement detailing shall conform to the corresponding post-tensioning catalog.
22. The curvature friction coefficient and wobble friction coefficient. The curvature friction coefficient of $\mu = 0.15$ for bridges less than 400 feet, $\mu = 0.2$ for bridges between 400 feet and 800 feet, and $\mu = 0.25$ for bridges longer than 800 feet. The wobble friction coefficient of $k = 0.0002$/ft is often used. These coefficients may be revised by the post-tensioning supplier if approved by the design engineer and conform to the *Standard Specifications* 6.02.3(26)G.
23. Post-tensioning stressing sequence.
24. Tendon stresses shall not exceed as specified per Figure 5.8.3-2:
    $0.80f_{pu}$ at anchor ends immediately before seating.
    $0.70f_{pu}$ at anchor ends immediately after seating.
    $0.74f_{pu}$ at the end point of length influenced by anchor set.
25. Elongation calculations for each jacking operation shall be verified. If the difference in tendon elongation exceeds 2%, the elongation calculations shall be separated for each tendon per *Standard Specifications* 6-02.3(26)A.

26. Vent points shall be provided at all high points along tendon.
27. Drain holes shall be provided at all low points along tendon.
28. The concrete strength at the time of post-tensioning, f'_{ci} shall not be less than 4,000 psi per *Standard Specifications* 6-02.3(26)G. Different concrete strength may be used if specified in the contract plans.
29. Concrete stresses at the anchorage shall be checked per *Standard Specifications* 6-02.3(26)C for bearing type anchorage. For other type of anchorage assemblies, if not covered in the Appendix 5-B2 for pre-approved list of post-tensioning system, testing per *Standard Specifications* 6-02.3(26)D is required.
30. Concrete stresses at CIP closures shall conform to allowable stresses of Table 5.2.1-1.

5.9.6 Post-tensioning Notes — Precast Post-tensioning Spliced-Girders

1. The CIP concrete in deck slab shall be Class 4000D. The minimum compressive strength of the CIP concrete at the wet joint at the time of post-tensioning shall be …. ksi.
2. The minimum prestressing load after seating and the minimum number of prestressing strands for each girder shall be as shown in post-tensioning table.
3. The design is based on ….. inch diameter low relaxation strands with a jacking load for each girder as shown in post-tensioning table, an anchor set of ⅜″ a curvature friction coefficient, μ= 0.20 and a wobble friction coefficient, k = 0.0002/ft. The actual anchor set used by the contractor shall be specified in the shop plans and included in the transfer force calculations.
4. The design is based on the estimated prestress loss of post-tensioned prestressing strands as shown in post-tensioning table due to steel relaxation, elastic shortening, creep and shrinkage of concrete.
5. The contractor shall submit the stressing sequence and elongation calculations to the engineer for approval. All losses due to tendon vertical and horizontal curvature must be included in elongation calculations. The stressing sequence shall meet the following criteria:
   A. The prestressing force shall be distributed with an approximately equal amount in each web and shall be placed symmetrically about the centerline of the bridge.
   B. No more than one-half of the prestressing force in any web may be stressed before an equal force is stressed in the adjacent webs. At no time during stressing operation will more than one-sixth of the total prestressing force is applied eccentrically about the centerline of bridge.
6. The maximum outside diameter of the duct shall be …. inches. The area of the duct shall be at least 2.5 times the net area of the prestressing steel in the duct.
7. All tendons shall be stressed from pier ….

5.99 References

1. AASHTO *LRFD Bridge Construction Specifications*, Current Edition, AASHTO, Washington, D.C.
2. Seguirant, S.J., "New Deep WSDOT Standard Sections Extend Spans of Prestressed Concrete Girders," PCI JOURNAL, V. 43, No. 4, July-August 1998, pp. 92-119.
3. PCI Bridge Design Manual, Precast/Prestressed Concrete Institute, Chicago, IL, 1997.
4. ACI 318-02, Building Code Requirements for Reinforced Concrete and Commentary, American Concrete Institute, 1989, pp.353.
5. Hsu, T. T. C., Torsion of Reinforced Concrete, Van Nostrand Reinhold Co., New York, 1st Ed., 1984, 516 pp.
6. Collins, M. P. and Mitchell, D., Shear and Torsion Design of Prestressed and Non-Prestressed Concrete Beams, PCI Journal, September-October, 1980, pp. 32-100.
7. Mirza, S.A., and Furlong, R.W., Design of Reinforced and Prestressed Concrete Inverted T Beams for Bridge Structures, PCI Journal, Vol. 30, No. 4, July-August 1985, pp. 112-136.
8. Rabbat, B.G., Reader Comments Design of Reinforced and Prestressed Concrete inverted T Beams for Bridge Structures, PCI Journal, Vol. 31, No. 3, May-June 1986, pp. 157-163.
9. ACI Committee 345, Guide for Widening Highway Bridges, ACI Structural Journal, July/August, 1992, pp. 451-466.
10. PCI Design Handbook, Precast and Prestressed Concrete, Sixth Edition, Precast/Prestressed Concrete Institute, Chicago, IL, 2004.
11. Mast, R.F., "Lateral Stability of Long Prestressed Concrete Beams, Part 1," PCI JOURNAL, V. 34, No. 1, January-February 1989, pp. 34-53.
12. Mast, R.F., "Lateral Stability of Long Prestressed Concrete Beams, Part 2," PCI JOURNAL, V. 38, No. 1, January-February 1993, pp. 70-88.
13. Imper, R.R., and Laszlo, G., "Handling and Shipping of Long Span Bridge Beams," PCI JOURNAL, V. 32, No. 6, November-December 1987, pp. 86-101.
14. Manual for the Evaluation and Repair of Precast, Prestressed Concrete Bridge Products, Precast/Prestressed Concrete Institute, Chicago, IL, 2006.
15. Transportation Research Board Report No. 226 titled, Damage Evaluation and Repair Methods for Prestressed Concrete Bridge Members.
16. Transportation Research Board Report No. 280 titled, Guidelines for Evaluation and Repair of Prestressed Concrete Bridge Members.
17. Post-tensioned Box Girder Bridge Manual, Post-tensioning Institute, 301 West Osborn, Phoenix, Arizona.
18. Prestressed Concrete Structures T. Y. Lin, Wiley.
19. Prestressed Concrete Vol. I and II, Guyon, Wiley
20. Design of Concrete Bridges for Temperature Gradients, ACI Journal, May 1978.
21. Mast, R. F., "Unified Design Provisions for Reinforced and Prestressed Concrete Flexural and Compression Members", ACI Structural Journal, V. 89, No. 2, March-April 1992, pp. 185-199. See also discussions by R.K. Devalapura and M.K. Tadros, C.W. Dolan and J.V. Loscheider and closure to discussions in V. 89, No. 5, September-October 1992, pp. 591-593.

22. Weigel, J.A., Seguirant, S.J., Brice, R., and Khaleghi, B., “High Performance Precast, Prestressed Concrete Girder Bridges in Washington State,” PCI JOURNAL, V. 48, No. 2, March-April 2003, pp. 28-52.

23. Seguirant, S. J., Brice, R., and Khaleghi, B., “Flexural Strength of Reinforced and Prestressed Concrete T-Beams,” PCI JOURNAL, V. 50, No. 1, January-February 2005, pp 44-73.

24. TRAC Report WA-RD 696.1, "Effect of Intermediate Diaphragms to Prestressed Concrete Bridge Girders in Over-Height Truck Impacts” completed on April 2008 by the Washington State University.

25. NCHRP Report 628, “Self-Consolidating Concrete for Precast, Prestressed Concrete Bridge Elements”, NCHRP Project 18-12, Transportation Research Board, 2009.

RECOMMENDED END HOOKS
All Grades
D = Finished bend diameter

Bar Size	D	180° HOOKS		90° HOOKS
		A or G	J	A or G
#3	2¼"	5"	3"	6"
#4	3"	6"	4"	8"
#5	3¾"	7"	5"	10"
#6	4½"	8"	6"	1'-0"
#7	5¼"	10"	7"	1'-2"
#8	6"	11"	8"	1'-4"
#9	9½"	1'-3"	11¾"	1'-7"
#10	10¾"	1'-5"	1'-1¼"	1'-10"
#11	1'-0"	1'-7"	1'-2¾"	2'-0"
#14	1'-6¼"	2'-3"	1'-9¾"	2'-7"
#18	2'-0"	3'-0"	2'-4½"	3'-5"

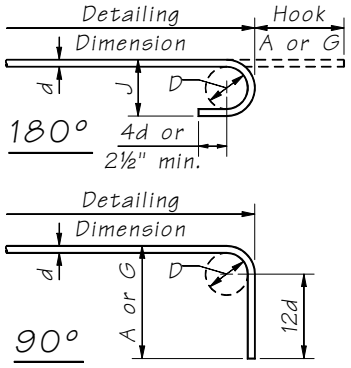

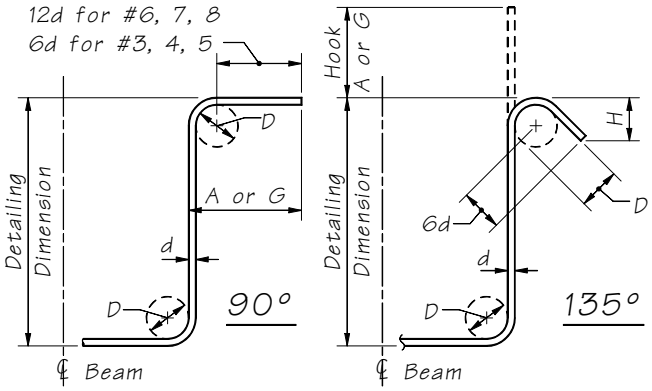

STIRRUP AND TIE HOOK DIMENSIONS
All Grades

Bar Size	D	90° HOOKS	135° HOOKS	
		Hook A or G	Hook A or G	H Approx.
#3	1½"	4"	4"	2½"
#4	2"	4½"	4½"	3"
#5	2½"	6"	5½"	3¾"
#6	4½"	1'-0"	8"	4½"
#7	5¼"	1'-2"	9"	5¼"
#8	6"	1'-4"	10½"	6"

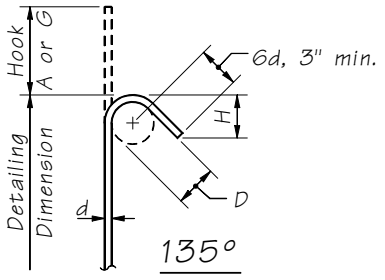

135° SEISMIC STIRRUP/TIE
HOOK DIMENSIONS
All Grades

Bar Size	D	135° HOOKS	
		Hook A or G	H Approx.
#3	1½"	4¼"	3"
#4	2"	4½"	3"
#5	2½"	5½"	3¾"
#6	4½"	8"	4½"
#7	5¼"	9"	5¼"
#8	6"	10½"	6"

PREFERED MINIMUM CLEARANCE AND SPACING
FOR BEAMS AND COLUMNS.
(DISTANCES IN INCHES)

Bar Size	A	B	C	D
#4	3¼	4	-	-
5	3½	4¼	-	-
6	3¾	4½	-	-
7	4	4¾	-	-
8	4¼	5	4½	5½
9	4½	5¼	4¾	6
10	4¾	5½	5	6¼
11	5	6	5⅛	6½
14	5½	7	5½	7¼
18	6	8½	6¾	9

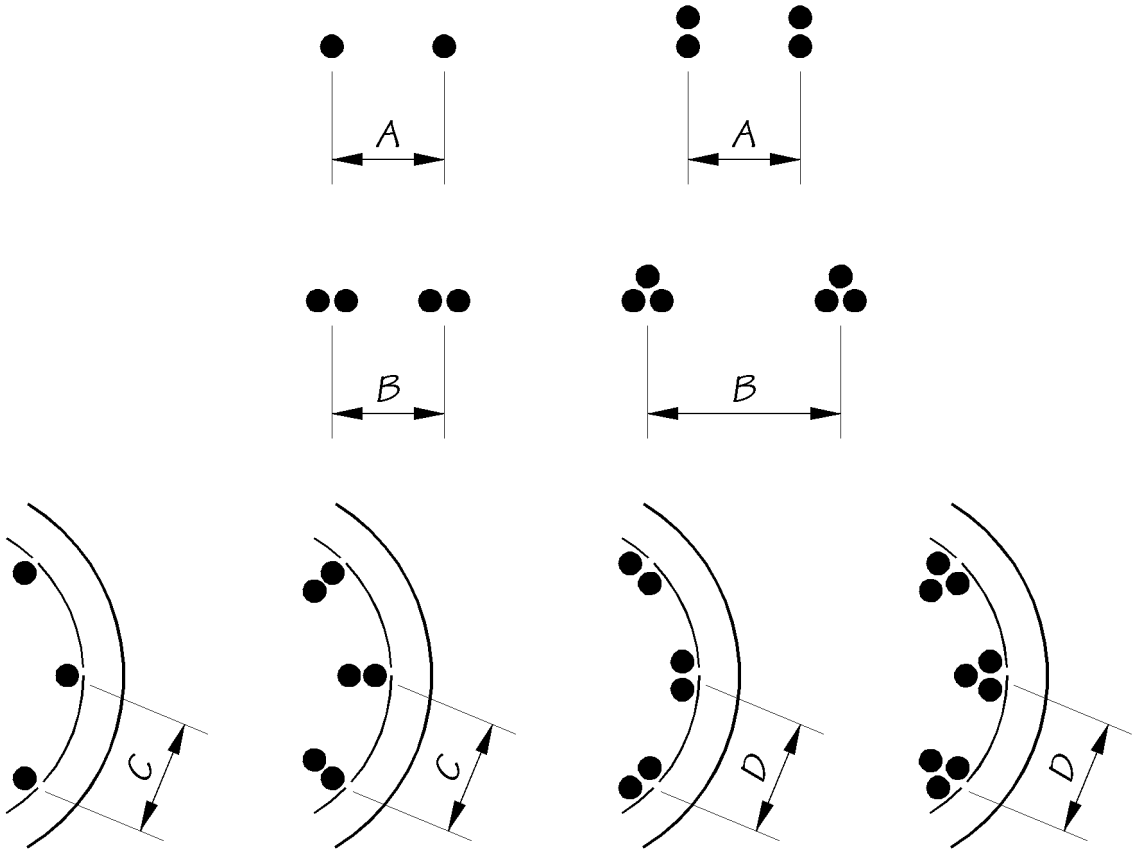

Appendix 5.1-A3 Reinforcing Bar Properties

Bar Size	Weight (lbs/ft)	Nominal Diameter (in)	Outside Diameter (in)	Area (in^2)	Standard Mill Length (ft)
#3	0.376	0.375	0.42	0.11	40
#4	0.668	0.500	0.56	0.20	40
#5	1.043	0.625	0.70	0.31	60
#6	1.502	0.750	0.83	0.44	60
#7	2.044	0.875	0.96	0.60	60
#8	2.670	1.000	1.10	0.79	60
#9	3.400	1.128	1.24	1.00	60
#10	4.303	1.270	1.40	1.27	60
#11	5.313	1.410	1.55	1.56	60
#14	7.65	1.693	1.86	2.25	60
#18	13.60	2.257	2.48	4.00	60

Tension Development Length of Uncoated Deformed Bars								
Bar Size	f'_c = 3,000 psi		f'_c = 4,000 psi		f'_c = 5,000 psi		f'_c = 6,000 psi	
	Top Bars	Others	Top Bars	Others	Top Bars	Others	Top Bars	Others
#3	1’-5”	1’-0”	1’-5”	1’-0”	1’-5”	1’-0”	1’-5”	1’-0”
#4	1’-5”	1’-0”	1’-5”	1’-0”	1’-5”	1’-0”	1’-5”	1’-0”
#5	1’-9”	1’-3”	1’-9”	1’-3”	1’-9”	1’-3”	1’-9”	1’-3”
#6	2’-3”	1’-8”	2’-2”	1’-6”	2’-2”	1’-6”	2’-2”	1’-6”
#7	3’-1”	2’-3”	2’-8”	1’-11”	2’-6”	1’-9”	2’-6”	1’-9”
#8	4’-1”	2’-11”	3’-6”	2’-6”	3’-2”	2’-3”	2’-11”	2’-1”
#9	5’-2”	3’-8”	4’-6”	3’-2”	4’-0”	2’-10”	3’-8”	2’-7”
#10	6’-6”	4’-8”	5’-8”	4’-1”	5’-1”	3’-8”	4’-8”	3’-4”
#11	8’-0”	5’-9”	6’-11”	5’-0”	6’-3”	4’-5”	5’-8”	4’-1”
#14	10’-11”	7’-10”	9’-5”	6’-9”	8’-5”	6’-1”	7’-9”	5’-6”
#18	14’-1”	10’-1”	12’-3”	8’-9”	10’-11”	7’-10”	10’-0”	7’-2”
Tension Development Length of Epoxy Coated Deformed Bars								
Bar Size	f'_c = 3,000 psi		f'_c = 4,000 psi		f'_c = 5,000 psi		f'_c = 6,000 psi	
	Top Bars	Others	Top Bars	Others	Top Bars	Others	Top Bars	Others
#3	1’-9”	1’-6”	1’-9”	1’-6”	1’-9”	1’-6”	1’-9”	1’-6”
#4	1’-9”	1’-6”	1’-9”	1’-6”	1’-9”	1’-6”	1’-9”	1’-6”
#5	2’-2”	1’-11”	2’-2”	1’-11”	2’-2”	1’-11”	2’-2”	1’-11”
#6	2’-9”	2’-5”	2’-7”	2’-3”	2’-7”	2’-3”	2’-7”	2’-3”
#7	3’-9”	3’-4”	3’-3”	2’-11”	3’-0”	2’-8”	3’-0”	2’-8”
#8	4’-11”	4’-4”	4’-3”	3’-9”	3’-10”	3’-5”	3’-6”	3’-1”
#9	6’-3”	5’-6”	5’-5”	4’-9”	4’-10”	4’-3”	4’-5”	3’-11”
#10	7’-11”	7’-0”	6’-10”	6’-1”	6’-2”	5’-5”	5’-7”	4’-11”
#11	9’-9”	8’-7”	8’-5”	7’-5”	7’-6”	6’-8”	6’-11”	6’-1”
#14	13’-3”	11’-8”	11’-6”	10’-1”	10’-3”	9’-1”	9’-4”	8’-3”
#18	17’-1”	15’-1”	14’-10”	13’-1”	13’-3”	11’-8”	12’-1”	10’-8”

Top bars are so placed that more than 12” of concrete is cast below the reinforcement.

Modifications factor for spacing >=6” and side cover>=3” = 0.8.

Modification factor for reinforcements enclosed in spirals = 0.75.

Minimum development length = 12”.

Appendix 5.1-A5 Compression Development Length and Minimum Lap Splice of Grade 60 Bars

Compression Development Length and Minimum Lap splice of Uncoated Deformed Bars						
Bar Size	Compression Development Length					Min. Lap Splice $f'c$ > 3.0 ksi
	Straight Bars				Hooked Bars	
	f'_c = 3 ksi	f'_c = 4 ksi	f'_c = 5 ksi	f'_c = 6 ksi		
#3	1’-0”	1’-0”	1’-0”	1’-0”	6”	2’-0”
#4	1’-0”	1’-0”	1’-0”	1’-0”	7”	2’-0”
#5	1’-2”	1’-0”	1’-0”	1’-0”	9”	2’-0”
#6	1’-5”	1’-3”	1’-2”	1’-2”	10”	2’-0”
#7	1’-8”	1’-5”	1’-4”	1’-4”	1’-0”	2’-3”
#8	1’-10”	1’-7”	1’-6”	1’-6”	1’-2”	2’-6”
#9	2’-1”	1’-10”	1’-9”	1’-9”	1’-3”	2’-10”
#10	2’-4”	2’-1”	1’-11”	1’-11”	1’-5”	3’-3”
#11	2’-7”	2’-3”	2’-2”	2’-2”	1’-7”	3’-7”
#14	3’-1”	2’-9”	2’-7”	2’-7”	2’-10	4’-3”
#18	4’-2”	3’-7”	3’-5”	3’-5”	3’-7”	5’-8”

Compression Development Length and Minimum Lap splice of Epoxy Coated Deformed Bars

Bar Size	Compression Development Length					Min. Lap Splice $f'c$ > 3.0 ksi
	Straight Bars				Hooked Bars	
	f'_c = 3 ksi	f'_c = 4 ksi	f'_c = 5 ksi	f'_c = 6 ksi		
#3	1’-0”	1’-0”	1’-0”	1’-0”	6”	2’-0”
#4	1’-0”	1’-0”	1’-0”	1’-0”	7”	2’-0”
#5	1’-2”	1’-0”	1’-0”	1’-0”	9”	2’-0”
#6	1’-5”	1’-3”	1’-2”	1’-2”	10”	2’-0”
#7	1’-8”	1’-5”	1’-4”	1’-4”	1’-0”	2’-3”
#8	1’-10”	1’-7”	1’-6”	1’-6”	1’-2”	2’-6”
#9	2’-1”	1’-10”	1’-9”	1’-9”	1’-3”	2’-10”
#10	2’-4”	2’-1”	1’-11”	1’-11”	1’-5”	3’-3”
#11	2’-7”	2’-3”	2’-2”	2’-2”	1’-7”	3’-7”
#14	3’-1”	2’-9”	2’-7”	2’-7”	2’-10	4’-3”
#18	4’-2”	3’-7”	3’-5”	3’-5”	3’-7”	5’-8”

Notes:

1. Where excess bar area is provided, the development length may be reduced by ratio of required area to provided area.
2. When splicing smaller bars to larger bars, the lap splice shall be the larger of the minimum compression lap splice or development length of the larger bar in compression.

Tension Development Length of 90º and 180º Standard Hooks

Bar Size	f'_c = 3,000 psi		f'_c = 4,000 psi		f'_c = 5,000 psi		f'_c = 6,000 psi	
	Side Cover < 2½" Cover on Tail < 2"	Side Cover >= 2½" Cover on Tail >= 2"	Side Cover < 2½" Cover on Tail < 2"	Side Cover >= 2½" Cover on Tail >= 2"	Side Cover < 2½" Cover on Tail < 2"	Side Cover >= 2½" Cover on Tail >= 2"	Side Cover < 2½" Cover on Tail < 2"	Side Cover >= 2½" Cover on Tail >= 2"
#3	0'-9"	0'-6"	0'-8"	0'-6"	0'-7"	0'-6"	0'-6"	0'-6"
#4	0'-11"	0'-8"	0'-10"	0'-7"	0'-9"	0'-7"	0'-8"*	0'-7"
#5	1'-2"	0'-10"	1'-0"	0'-9"	0'-11"	0'-8"	0'-10"	0'-7"
#6	1'-5"	1'-0"	1'-3"	0'-10"	1'-1"	0'-9"	1'-0"	0'-8"
#7	1'-8"	1'-2"	1'-5"	1'-0"	1'-3"	0'-11"	1'-2"	0'-10"
#8	1'-10"	1'-4"	1'-7"	1'-2"	1'-5"	1'-0"	1'-4"	0'-11"
#9	2'-1"	1'-6"	1'-10"	1'-3"	1'-8"	1'-2"	1'-6"	1'-1"
#10	2'-4"	1'-8"	2'-1"	1'-5"	1'-10"	1'-3"	1'-8"	1'-2"
#11	2'-7"	1'-10"	2'-3"	1'-7"	2'-0"	1'-5"	1'-10"	1'-4"
#14	3'-1"	3'-1"	2'-9"	2'-9"	2'-5"	2'-5"	2'-3"	2'-3"
#18	4'-2"	4'-2"	3'-7"	3'-7"	3'-3"	3'-3"	2'-11"	2'-11"

Modification factor for epoxy coated reinforcement = 1.2.

Appendix 5.1-A7 Tension Lap Splice Lengths of Grade 60 Bars — Class B

Tension Lap Splice Lengths of Grade 60 Uncoated Bars – Class B

Bar Size	f'_c = 3,000 psi		f'_c = 4,000 psi		f'_c = 5,000 psi		f'_c = 6,000 psi	
	Top Bars	Others	Top Bars	Others	Top Bars	Others	Top Bars	Others
#3	2′-0″	2′-0″	2-0″	2′-0″	2′-0″	2′-0″	2′-0″	2′-0″
#4	2′-0″	2′-0″	2′-0″	2′-0″	2′-0″	2′-0″	2′-0″	2′-0″
#5	2′-4″	2′-0″	2′-4″	2′-0″	2′-4″	2′-0″	2′-4″	2′-0″
#6	2′-11″	2′-1″	2′-9″	2′-0″	2′-9″	2′-0″	2′-9″	2′-0″
#7	4′-0″	2′-11″	3′-6″	2′-6″	3′-3″	2′-4″	3′-3″	2′-4″
#8	5′-3″	3′-9″	4′-7″	3′-3″	4′-11″	2′-11″	3′-9″	2′-8″
#9	6′-8″	4′-9″	5′-9″	4′-2″	5′-2″	3′-9″	4′-9″	3′-5″
#10	8′-6″	6′-1″	7′-4″	5′-3″	6′-7″	4′-8″	6′-0″	4′-4″
#11	10′-5″	7′-5″	9′-0″	6′-5″	8′-1″	5′-9″	7′-4″	5′-3″
#14	Lap Splices		Lap Splices		Lap Splices		Lap Splices	
#18	Not Allowed		Not Allowed		Not Allowed		Not Allowed	

Tension Lap Splice Lengths of Grade 60 Epoxy Coated Bars – Class B

Bar Size	f'_c = 3,000 psi		f'_c = 4,000 psi		f'_c = 5,000 psi		f'_c = 6,000 psi	
	Top Bars	Others	Top Bars	Others	Top Bars	Others	Top Bars	Others
#3	2′-3″	2′-0″	2′-3″	2′-0″	2′-3″	2′-0″	2′-3″	2′-0″
#4	2′-3″	2′-0″	2′-3″	2′-0″	2′-3″	2′-0″	2′-3″	2′-0″
#5	2′-10″	2′-6″	2′-10″	2′-6″	2′-10″	2′-6″	2′-10″	2′-6″
#6	3′-7″	3′-2″	3′-4″	3′-0″	3′-4″	3′-0″	3′-4″	3′-0″
#7	4′-11″	4′-4″	4′-3″	3′-9″	3′-11″	3′-5″	3′-11″	3′-5″
#8	6′-5″	5′-8″	5′-7″	4′-11″	5′-0″	4′-5″	4′-6″	4′-0″
#9	8′-1″	7′-2″	7′-0″	6′-2″	6′-3″	5′-7″	5′-9″	5′-1″
#10	10′3″	9′-1″	8′-11″	7′-10″	8′-0″	7′-0″	7′-3″	6′-5″
#11	12′-8″	11′-2″	10′-11″	9′-8″	9′-9″	8′-0″	8′-11″	7′-11″
#14	Lap Splices		Lap Splices		Lap Splices		Lap Splices	
#18	Not Allowed		Not Allowed		Not Allowed		Not Allowed	

Top bars are so placed that more than 12″ of concrete is cast below the reinforcement.

Modification factor for spacing ≤ 6″ and side cover ≤ 3″ = 0.8.

Modification factor for reinforcements enclosed in spirals = 0.75.

Definition of splice classes:
- Class A: Low stressed bars – 75% or less are spliced
- Class B: Low stressed bars – more than 75% are spliced
  High stressed bars – 50% or less are spliced
- Class C: High stressed bars – more than 50% are spliced

Class B lap splice is the preferred and most commonly used by Bridge Office.

Modification factor for Class A = 0.77
Modification factor for Class C = 1.31
Modification factor for 3-bar bundle = 1.2

Uncoated Prestressing Strands Properties and Development Length

Strand Diameter (in)	Weight (lbs/ft)	Nominal Diameter (in)	Area (in^2)	Transfer length (in)	Develop. Length *k* = 1.0 (ft)	Develop. Length *k* = 1.6 (ft)
3/8	0.29	0.375	0.085	22.5	5.05	8.08
7/16	0.40	0.438	0.115	26.3	5.90	9.44
1/2	0.52	0.500	0.153	30.0	6.74	10.78
1/2 S	0.53	0.500	0.167	30.0	6.74	10.78
9/16	0.65	0.563	0.192	33.8	7.58	12.14
0.60	0.74	0.600	0.217	36.0	8.08	12.93
0.62	0.80	0.620	0.233	37.2	8.35	13.36
0.70	1.00	0.700	0.294	42.0	9.43	15.09

Epoxy Coated Prestressing Strands Properties and Development Length

Strand Diameter (in)	Weight (lbs/ft)	Nominal Diameter (in)	Area (in^2)	Transfer length (in)	Develop. Length *k* = 1.0 (ft)	Develop. Length *k* = 1.6 (ft)
3/8	0.31	0.415	0.085	24.9	5.59	8.95
7/16	0.42	0.478	0.115	28.7	6.44	10.31
1/2	0.54	0.540	0.153	32.4	7.28	11.64
0.60	0.64	0.648	0.217	38.9	8.73	13.97

Assumptions for determining development length:

f_{ps} = f_{pu} = *270 ksi*

f_{pe} = *(270 ksi x 0.75) - 40 ksi = 162.5 ksi*

Service Load — Concrete Stresses and Constants

		CLASS	CLASS
n	(See E_c below)	8	10
f'_c		4000 psi.	3000 psi.
f_c	(Compression)	1600	1200
f_t	(Tension) Use only with special permission	100	86
f_s	(Grade 40)	20,000	20,000
f_s	(Grade 60)	24,000	24,000
v_c	(With web reinf.)	313	271
v_c		60 *	52 *
	Slabs & Footings (Peripheral Shear)		
	v_c	114	99
	v_c (With web reinf.)	190	164
K	(f_s = 24000)	246	
K	Balanced rectangular sections	272	197
k		.390	.375
j		.870	.875
p		.0156	.01125
E_c	(for stress calc.) (n as above)	522,000 #/□"	418,000 #/□"
E_c	(for short term defl. due to E. Q., etc.) (n = 8)	522,000	522,000
E_c	(for D.L. Camber of Slabs, T&S Moms., Settlement) (n=16)	261,000	261,000
E_c	(for D.L. Camber, except slabs) (n = 24)	174,000	174,000

Temp. Coeff. = .000006 in./in. ~ 45° Drop to 35° Rise ~ All climates.
Shrinkage Coeff. = .0002 in. (Temp. rise & shrinkage cancel).

* For more detailed analysis $v_c = 0.9(f'_c)^{\frac{1}{2}} + 1100\,\rho_w\left(\frac{V_d}{M}\right)$
See 1974 A.A.S.H.T.O. Interim I.5.29 (B)(2).

Stirrup spacing ; (Kip & inch units) $S = \frac{A_s \times f_s \times jd}{V - V_c} = \frac{A_s \times 20 \times 7/8\,d}{V_s} = \frac{17.50\,A_s \times d}{V_s}$

A_s = Total area of stirrup legs.
V_s = Total shear taken by stirrups.
V = Total shear on section.
V_c = Total shear by conc. = $v_c \times bjd$

o

$d = \sqrt{M/bK}$ (Balanced rectangular section)

$f_c = \frac{2M}{kjbd^2}$ (Rectangular section)

$f_s = \frac{M}{A_s jd}$

$v = \frac{V}{bjd}$

$n = \frac{E_s}{E_c}$

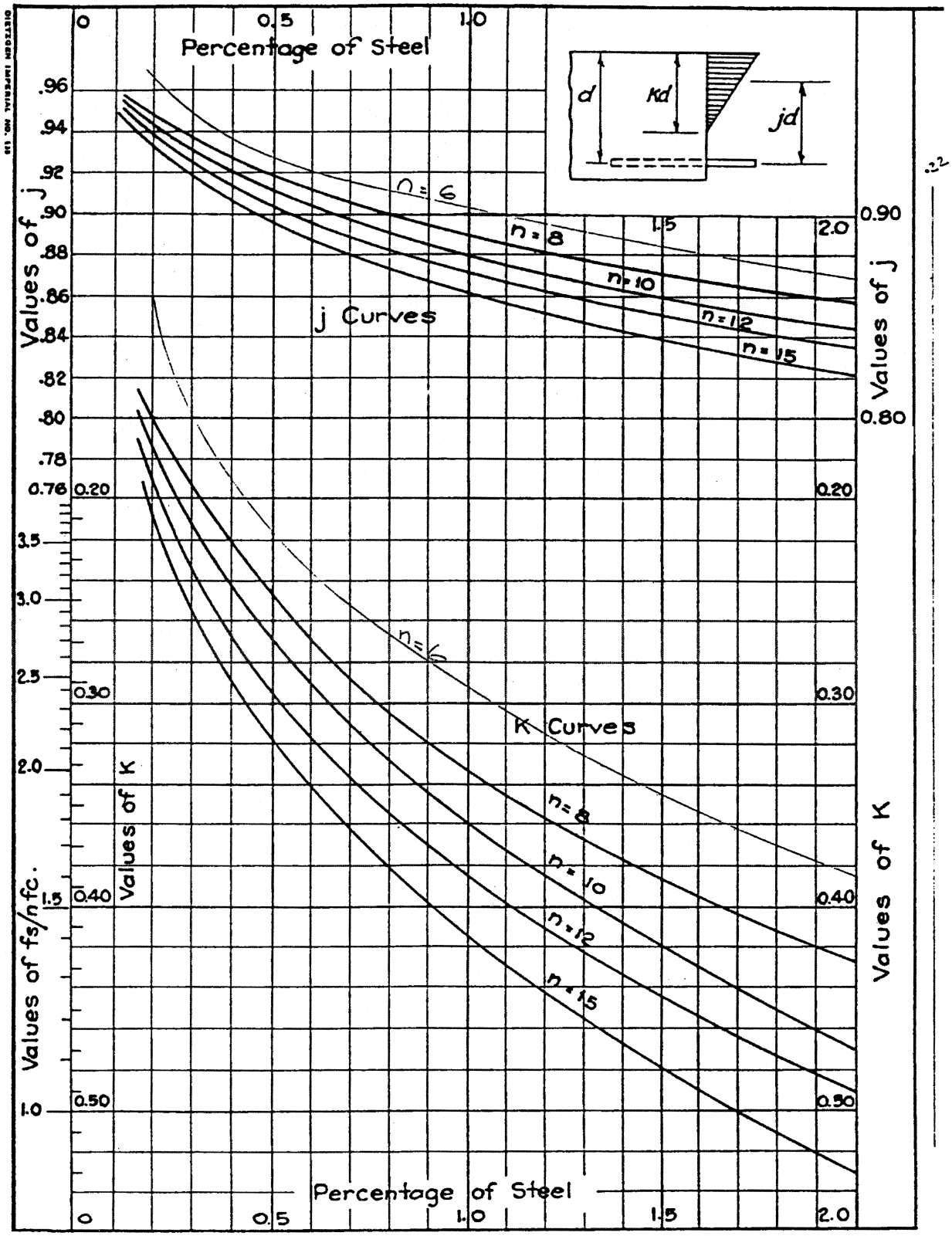
Percentage of Steel
0
0.5
1.0
1.5
2.0
d
Kd
jd
n = 6
n = 8
n = 10
n = 12
n = 15
j Curves
Values of j
.96
.94
.92
.90
.88
.86
.84
.82
.80
.78
0.76
0.90
0.80
0.20
3.5
3.0
2.5
2.0
1.5
1.0
0.30
0.40
0.50
Values of K
Values of fs/nfc.
K Curves
n = 6
n = 8
n = 10
n = 12
n = 15
Percentage of Steel

COEFFICIENTS (K, k, j, p) FOR RECTANGULAR SECTIONS

f'_c and n	f_c	K	k	j	p	K	k	j	p
		f_s = 16,000		a = 1.13		f_s = 18,000		a = 1.29	
	875.	137.	.356	.881	.0097	128.	.329	.890	.0080
2500	1000.	169.	.387	.871	.0121	158.	.359	.880	.0100
	1125.	201.	.415	.862	.0146	190.	.387	.871	.0121
10.1	1250.	235.	.441	.853	.0172	222.	.412	.863	.0143
	1500.	306.	.486	.838	.0228	291.	.457	.848	.0190
	1050.	173.	.376	.875	.0124	162.	.349	.884	.0102
3000	1200.	212.	.408	.864	.0153	199.	.380	.873	.0127
	1350.	252.	.437	.854	.0184	238.	.408	.864	.0153
9.2	1500.	294.	.463	.846	.0217	278.	.434	.855	.0181
	1800.	380.	.509	.830	.0286	362.	.479	.840	.0240
	1400.	249.	.412	.863	.0180	234.	.384	.872	.0149
4000	1600.	303.	.444	.852	.0222	286.	.416	.861	.0185
	1800.	359.	.474	.842	.0266	341.	.444	.852	.0222
8.0	2000.	417.	.500	.833	.0313	397.	.471	.843	.0261
	2400.	536.	.545	.818	.0409	513.	.516	.828	.0344
	1750.	327.	.437	.854	.0239	309.	.408	.864	.0199
5000	2000.	397.	.470	.843	.0294	376.	.441	.853	.0245
	2250.	468.	.500	.833	.0351	446.	.470	.843	.0294
7.1	2500.	542.	.526	.825	.0411	518.	.497	.835	.0345
	3000.	694.	.571	.810	.0535	666.	.542	.819	.0452
		f_s = 20,000		a = 1.44		f_s = 22,000		a = 1.60	
	875.	120.	.306	.898	.0067	113.	.287	.904	.0057
2500	1000.	149.	.336	.888	.0084	141.	.315	.895	.0072
	1125.	179.	.362	.879	.0102	170.	.341	.886	.0087
10.1	1250.	211.	.387	.871	.0121	200.	.365	.878	.0104
	1500.	277.	.431	.856	.0162	264.	.408	.864	.0139
	1050.	152.	.326	.891	.0085	144.	.305	.898	.0073
3000	1200.	188.	.356	.881	.0107	178.	.334	.889	.0091
	1350.	226.	.383	.872	.0129	214.	.361	.880	.0111
9.2	1500.	265.	.408	.864	.0153	252.	.385	.872	.0131
	1800.	346.	.453	.849	.0204	331.	.429	.857	.0176
	1400.	221.	.359	.880	.0126	210.	.337	.888	.0107
4000	1600.	272.	.390	.870	.0156	258.	.368	.877	.0134
	1800.	324.	.419	.860	.0188	309.	.396	.868	.0162
8.0	2000.	379.	.444	.852	.0222	362.	.421	.860	.0191
	2400.	492.	.490	.837	.0294	472.	.466	.845	.0254
	1750.	292.	.383	.872	.0168	278.	.361	.880	.0144
5000	2000.	358.	.415	.862	.0208	341.	.392	.869	.0178
	2250.	426.	.444	.852	.0250	407.	.421	.860	.0215
7.1	2500.	496.	.470	.843	.0294	475.	.447	.851	.0254
	3000.	641.	.516	.828	.0387	617.	.492	.836	.0335
		f_s = 27,000		a = 2.00		f_s = 30,000		a = 2.24	
	875.	99.	.247	.918	.0040	92.	.228	.924	.0033
2500	1000.	124.	.272	.909	.0050	115.	.252	.916	.0042
	1125.	150.	.296	.901	.0062	140.	.275	.908	.0052
10.1	1250.	178.	.319	.894	.0074	167.	.296	.901	.0062
	1500.	237.	.359	.880	.0100	224.	.336	.888	.0084
	1050.	126.	.264	.912	.0051	117.	.244	.919	.0043
3000	1200.	157.	.290	.903	.0064	147.	.269	.910	.0054
	1350.	190.	.315	.895	.0079	178.	.293	.902	.0066
9.2	1500.	225.	.338	.887	.0094	211.	.315	.895	.0079
	1800.	299.	.380	.873	.0127	282.	.356	.881	.0107
	1400.	185.	.293	.902	.0076	173.	.272	.909	.0063
4000	1600.	230.	.322	.893	.0095	215.	.299	.900	.0080
	1800.	277.	.348	.884	.0116	260.	.324	.892	.0097
8.0	2000.	326.	.372	.876	.0138	308.	.348	.884	.0116
	2400.	430.	.416	.861	.0185	407.	.390	.870	.0156
	1750.	247.	.315	.895	.0102	231.	.293	.902	.0085
5000	2000.	305.	.345	.885	.0128	287.	.321	.893	.0107
	2250.	366.	.372	.876	.0155	346.	.347	.884	.0130
7.1	2500.	430.	.397	.868	.0184	407.	.372	.876	.0155
	3000.	564.	.441	.853	.0245	537.	.415	.862	.0208

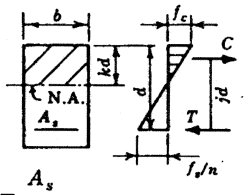

$$p = \frac{A_s}{bd}$$

$$k = \frac{1}{1 + f_s/nf_c} \qquad j = 1 - \tfrac{1}{3}k$$

$$p^* = \frac{f_c}{2f_s} \times k \qquad K = \frac{f_c}{2}kj$$

$$a = \frac{f_s}{12{,}000} \times \text{(av. } j\text{-value)}$$

for use in

$$A_s = \frac{M}{ad} \text{ or } A_s = \frac{NE}{adi}$$

K	k	j	p
f_s = 24,000		a = 1.76	
107.	.269	.910	.0049
133.	.296	.901	.0062
161.	.321	.893	.0075
191.	.345	.885	.0090
253.	.387	.871	.0121
136.	.287	.904	.0063
169.	.315	.895	.0079
204.	.341	.886	.0096
240.	.365	.878	.0114
317.	.408	.864	.0153
199.	.318	.894	.0093
246.	.348	.884	.0116
295.	.375	.875	.0141
347.	.400	.867	.0167
454.	.444	.852	.0222
265.	.341	.886	.0124
326.	.372	.876	.0155
390.	.400	.867	.0187
456.	.425	.858	.0221
595.	.470	.843	.0294
f_s = 33,000		a = 2.48	
86.	.211	.930	.0028
108.	.234	.922	.0036
132.	.256	.915	.0044
157.	.277	.908	.0052
211.	.315	.895	.0072
110.	.226	.925	.0036
138.	.251	.916	.0046
168.	.273	.909	.0056
199.	.295	.902	.0067
267.	.334	.889	.0091
162.	.253	.916	.0054
203.	.279	.907	.0068
246.	.304	.899	.0083
291.	.327	.891	.0099
387.	.368	.877	.0134
218.	.274	.909	.0073
271.	.301	.900	.0091
327.	.326	.891	.0111
386.	.350	.883	.0132
511.	.392	.869	.0178

*"Balanced steel ratio" applies to problems involving bending only.

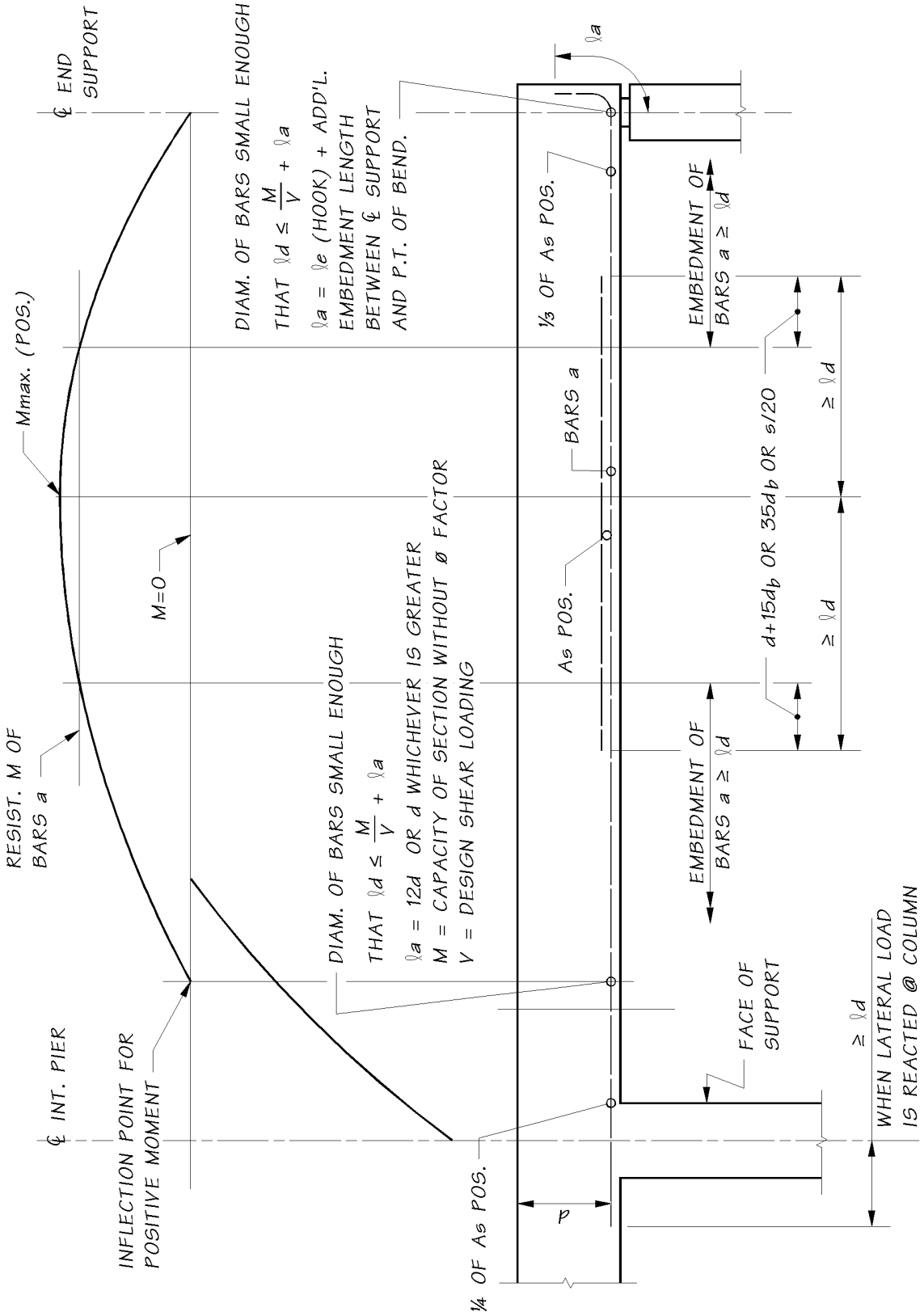
℄ END SUPPORT
DIAM. OF BARS SMALL ENOUGH
THAT ℓd ≤ M/V + ℓa
ℓa = ℓe (HOOK) + ADD'L. EMBEDMENT LENGTH BETWEEN ℄ SUPPORT AND P.T. OF BEND.
ℓa
⅓ OF As POS.
EMBEDMENT OF BARS a ≥ ℓd
Mmax. (POS.)
BARS a
≥ ℓd
M=0
As POS.
d+15db OR 35db OR s/20
≥ ℓd
RESIST. M OF BARS a
DIAM. OF BARS SMALL ENOUGH
THAT ℓd ≤ M/V + ℓa
ℓa = 12d OR d WHICHEVER IS GREATER
M = CAPACITY OF SECTION WITHOUT ø FACTOR
V = DESIGN SHEAR LOADING
EMBEDMENT OF BARS a ≥ ℓd
℄ INT. PIER
INFLECTION POINT FOR POSITIVE MOMENT
FACE OF SUPPORT
≥ ℓd
WHEN LATERAL LOAD IS REACTED @ COLUMN
¼ OF As POS.
p

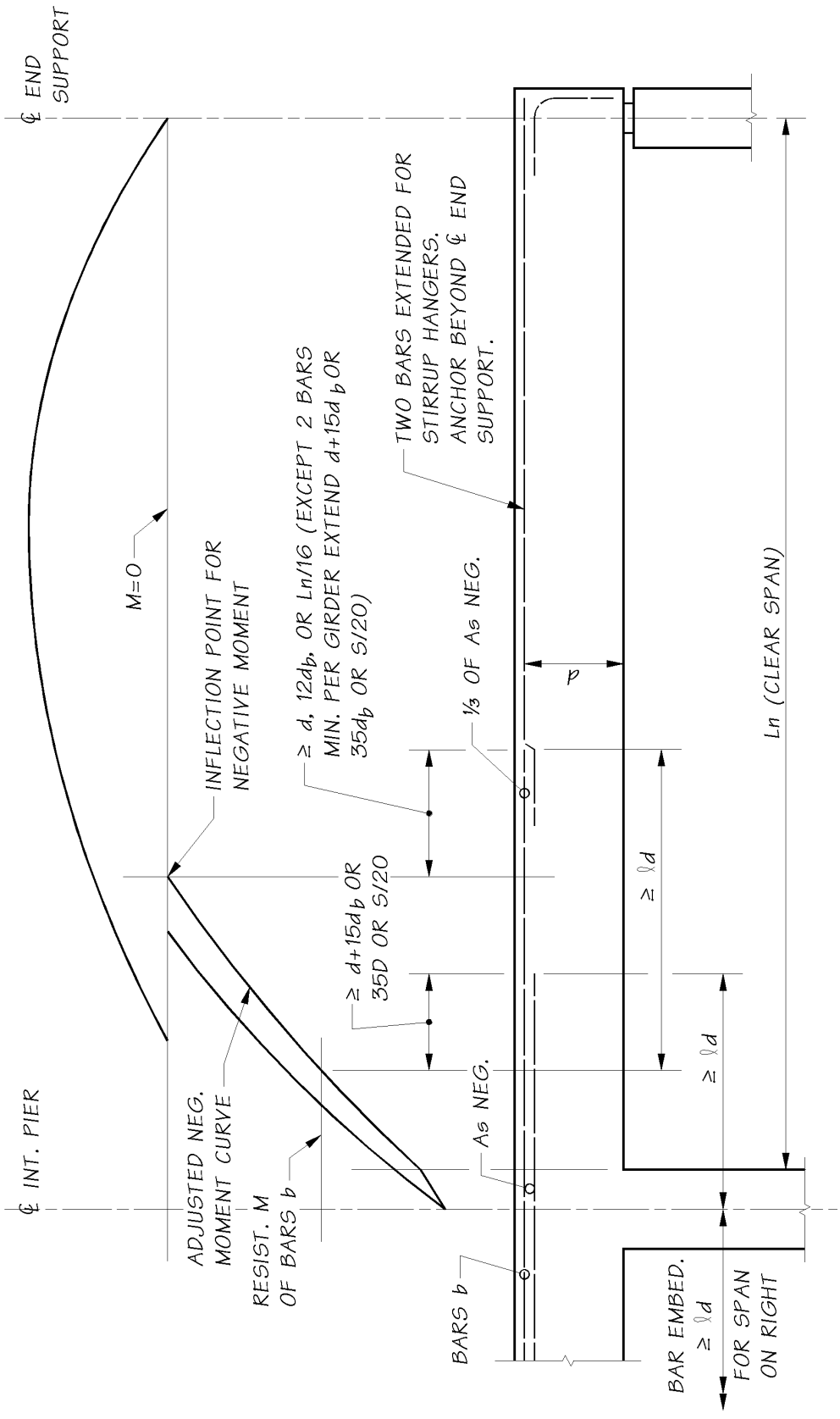
℄ END SUPPORT
M=0
INFLECTION POINT FOR NEGATIVE MOMENT
≥ d, 12d_b, OR Ln/16 (EXCEPT 2 BARS MIN. PER GIRDER EXTEND d+15d_b OR 35d_b OR S/20)
TWO BARS EXTENDED FOR STIRRUP HANGERS. ANCHOR BEYOND ℄ END SUPPORT.
⅓ OF As NEG.
p
Ln (CLEAR SPAN)
≥ ℓd
≥ d+15d_b OR 35D OR S/20
≥ ℓd
℄ INT. PIER
ADJUSTED NEG. MOMENT CURVE
RESIST. M OF BARS b
As NEG.
BARS b
BAR EMBED. ≥ ℓd
FOR SPAN ON RIGHT

CASE I (DESIGN FOR M AT FACE OF EFFECTIVE SUPPORT) APPLIES TO GIRDERS, BEAMS OR X-BEAMS WHERE THE SUPPORT INCREASES THE DEPTH OF THE BEAM EXCEPT FOR CASES WHERE:

1. THE INCREASE IN DEPTH DUE TO THE SUPPORT IS INSUFICIENT TO RESIST THE MOMENT AT ℄ SUPPORT; THAT IS
   $d_{℄} < d_{face} \frac{M\ ¼\ PT.}{M_{face}}$
2. CONTINUOUS BEAMS WHERE ONE-HALF THE LENGTH OF SUPPORT DIVIDED BY THE SPAN IS GREATER THAN 0.1:($\frac{W/2}{SPAN} > 0.1$)

WHERE CASE 1. OR 2. APPLIES USE CASE II.

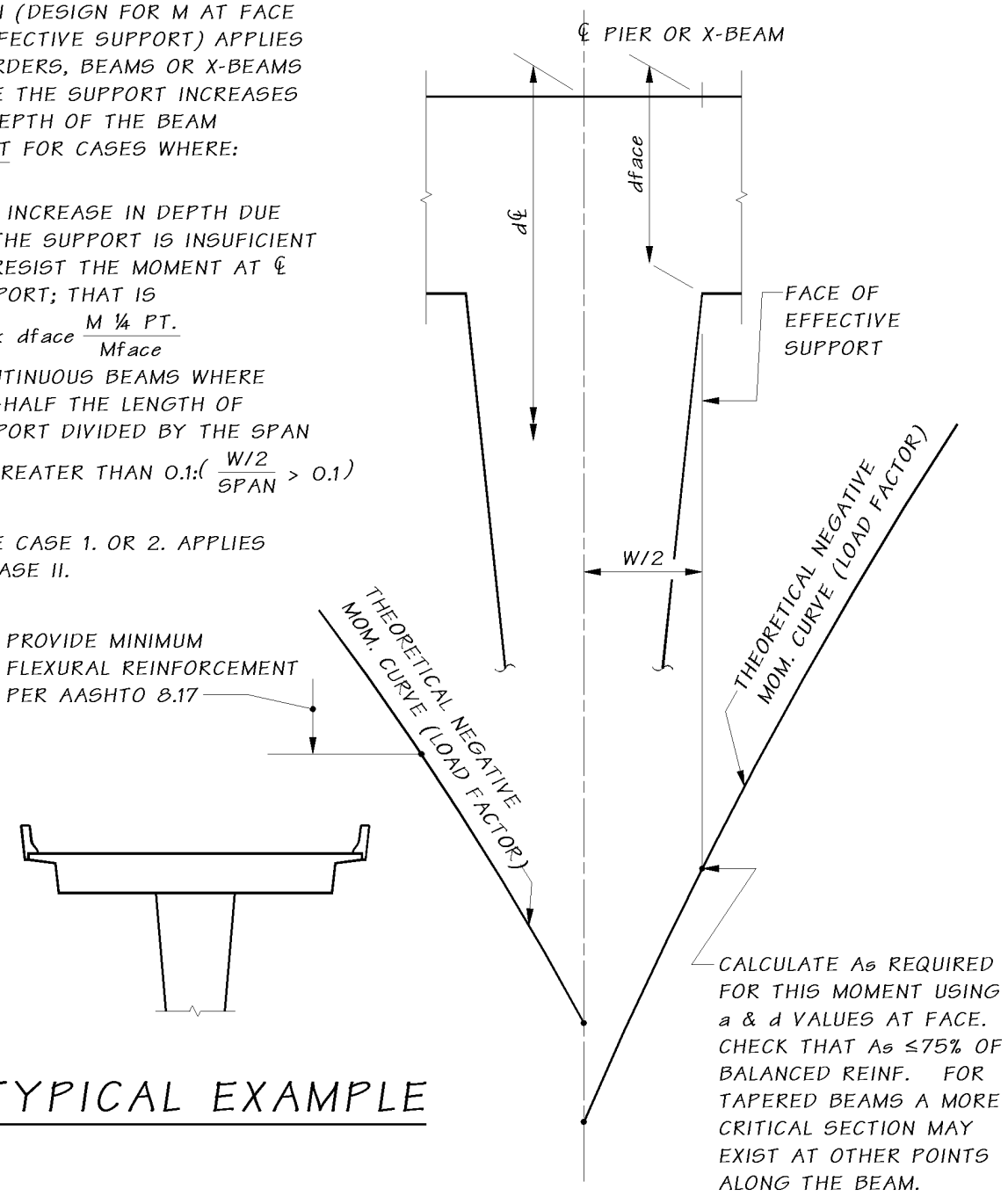

TYPICAL EXAMPLE

CASE II (DESIGN FOR M ½ POINT OF SUPPORT) APPLIES TO GIRDERS, BEAMS, OR X-BEAMS WHERE ONE OF THE FOLLOWING SUPPORT CONDITIONS EXIST:

1. NO INCREASE IN BEAM DEPTH CAN BE ATTRIBUTED TO THE SUPPORT.
2. THE INCREASE IN DEPTH DUE TO THE SUPPORT IS INSUFICIENT TO RESIST THE MOMENT AT ℄ SUPPORT; THAT IS

   $d\text{℄} \le dface \frac{M\ ¼\ PT.}{Mface}$

3. CONTINUOUS BEAMS WHERE ONE-HALF THE LENGTH OF SUPPORT DIVIDED BY THE SPAN IS GREATER THAN 0.1: $\left(\frac{W/2}{SPAN} > 0.1 \right)$

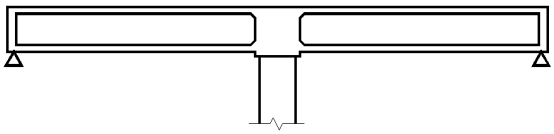

TYPICAL SECTION

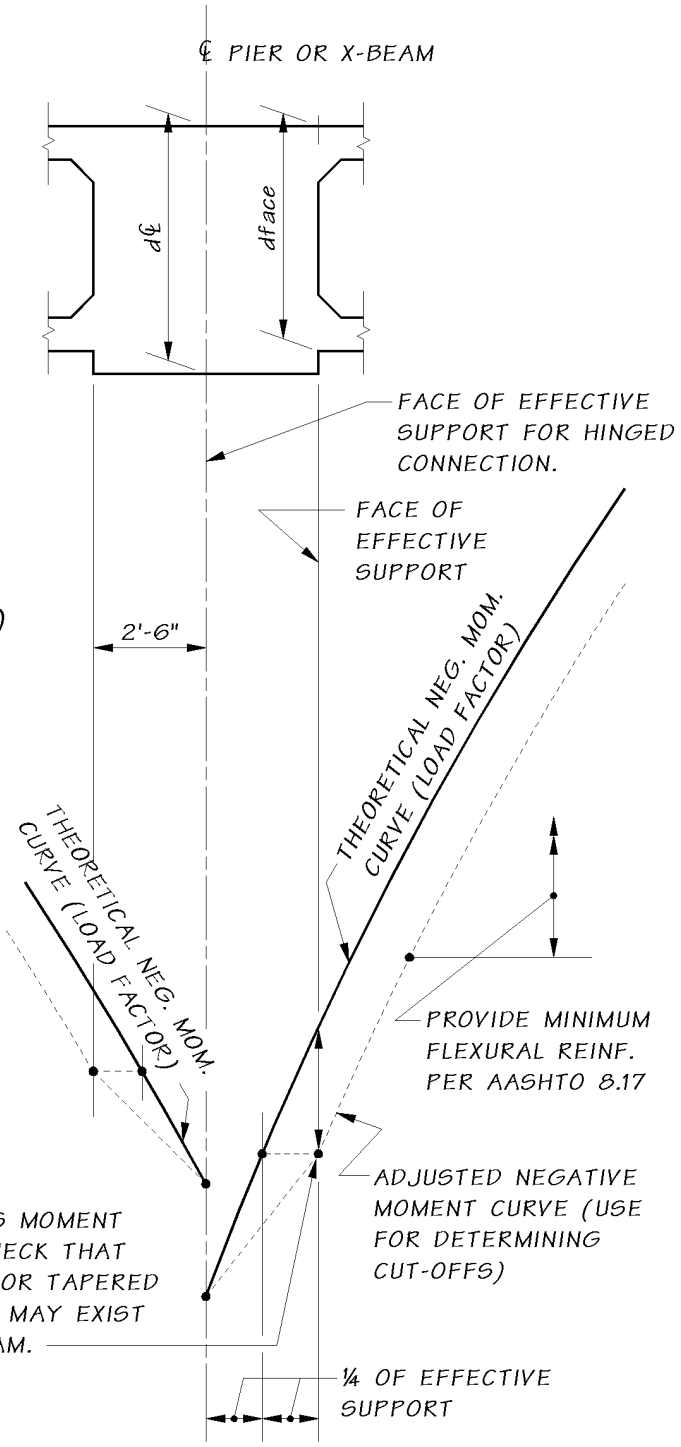

CALCULATE As REQUIRED FOR THIS MOMENT USING a & d VALUES AT FACE. CHECK THAT As ≤ 75% OF BALANCED REINF. FOR TAPERED BEAMS A MORE CRITICAL SECTION MAY EXIST AT OTHER POINTS ALONG THE BEAM.

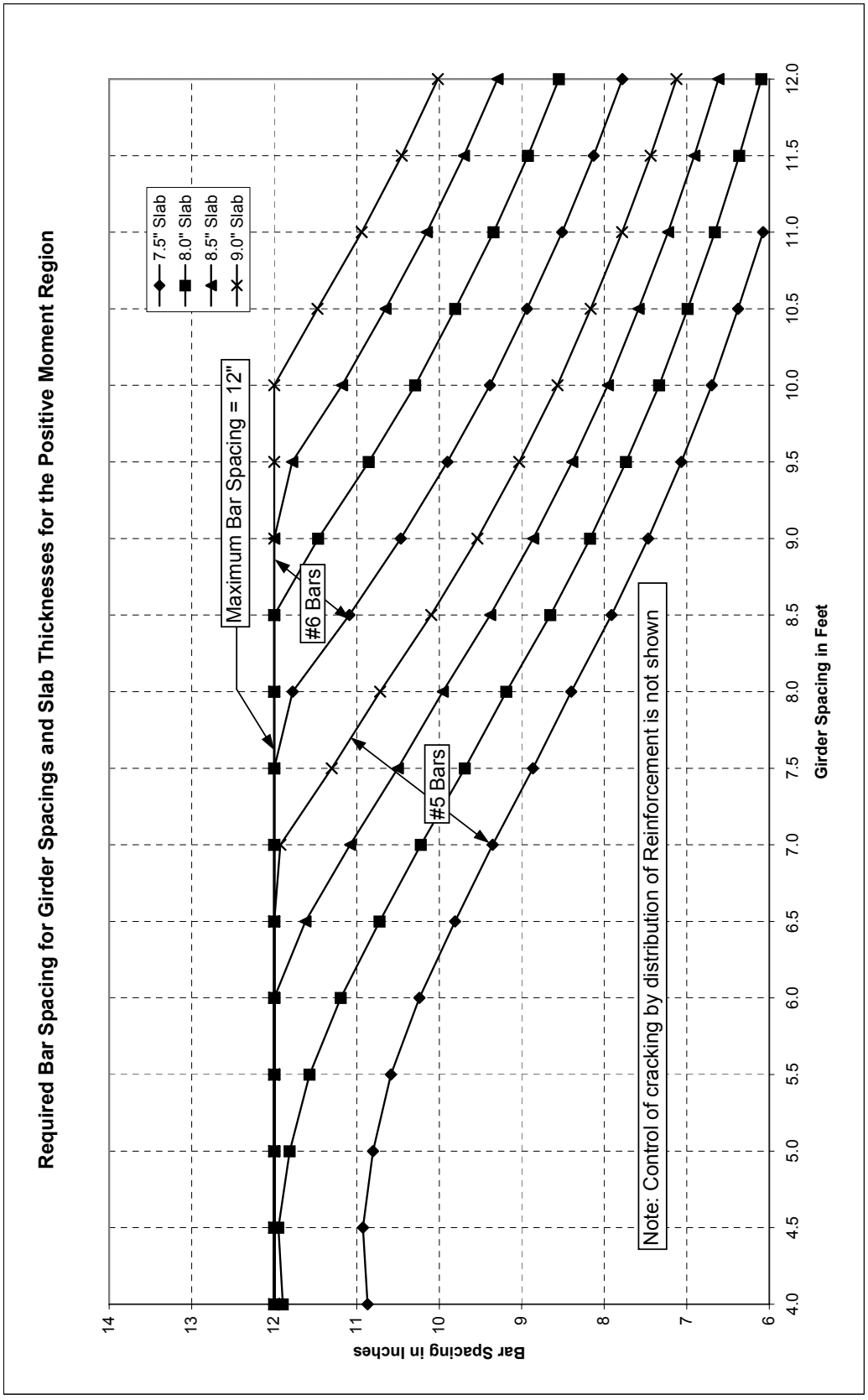
Required Bar Spacing for Girder Spacings and Slab Thicknesses for the Positive Moment Region
7.5" Slab
8.0" Slab
8.5" Slab
9.0" Slab
Maximum Bar Spacing = 12"
#6 Bars
#5 Bars
Note: Control of cracking by distribution of Reinforcement is not shown
Bar Spacing in Inches
Girder Spacing in Feet
14
13
12
11
10
9
8
7
6
4.0
4.5
5.0
5.5
6.0
6.5
7.0
7.5
8.0
8.5
9.0
9.5
10.0
10.5
11.0
11.5
12.0

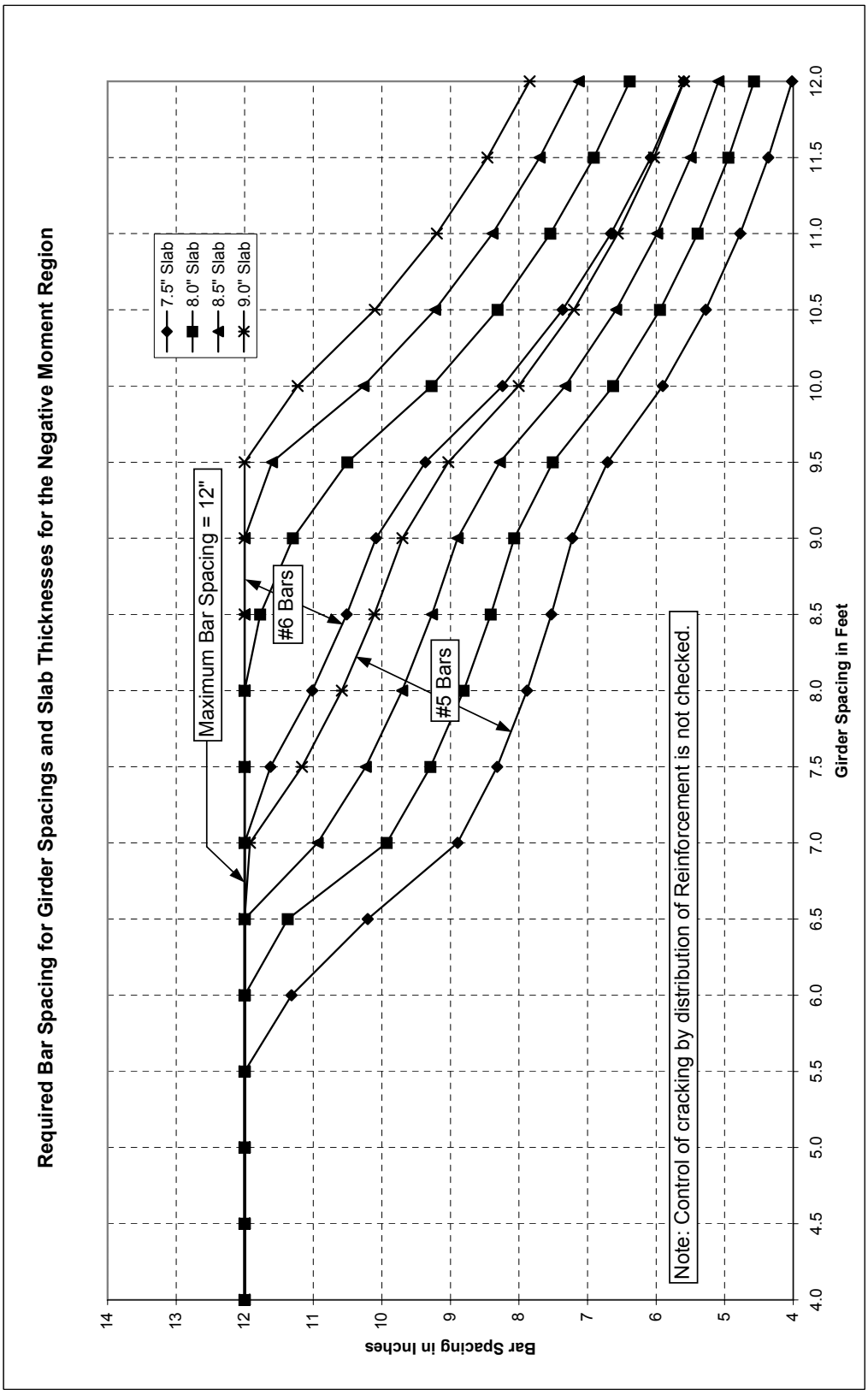
Required Bar Spacing for Girder Spacings and Slab Thicknesses for the Negative Moment Region
7.5" Slab
8.0" Slab
8.5" Slab
9.0" Slab
Maximum Bar Spacing = 12"
#6 Bars
#5 Bars
Note: Control of cracking by distribution of Reinforcement is not checked.
Bar Spacing in Inches
Girder Spacing in Feet
14
13
12
11
10
9
8
7
6
5
4
4.0
4.5
5.0
5.5
6.0
6.5
7.0
7.5
8.0
8.5
9.0
9.5
10.0
10.5
11.0
11.5
12.0

Slab Overhang Required Reinforcement for Vehicle Impact - Interior Barrier Segment - LRFD A13.4.1 Design Case 1

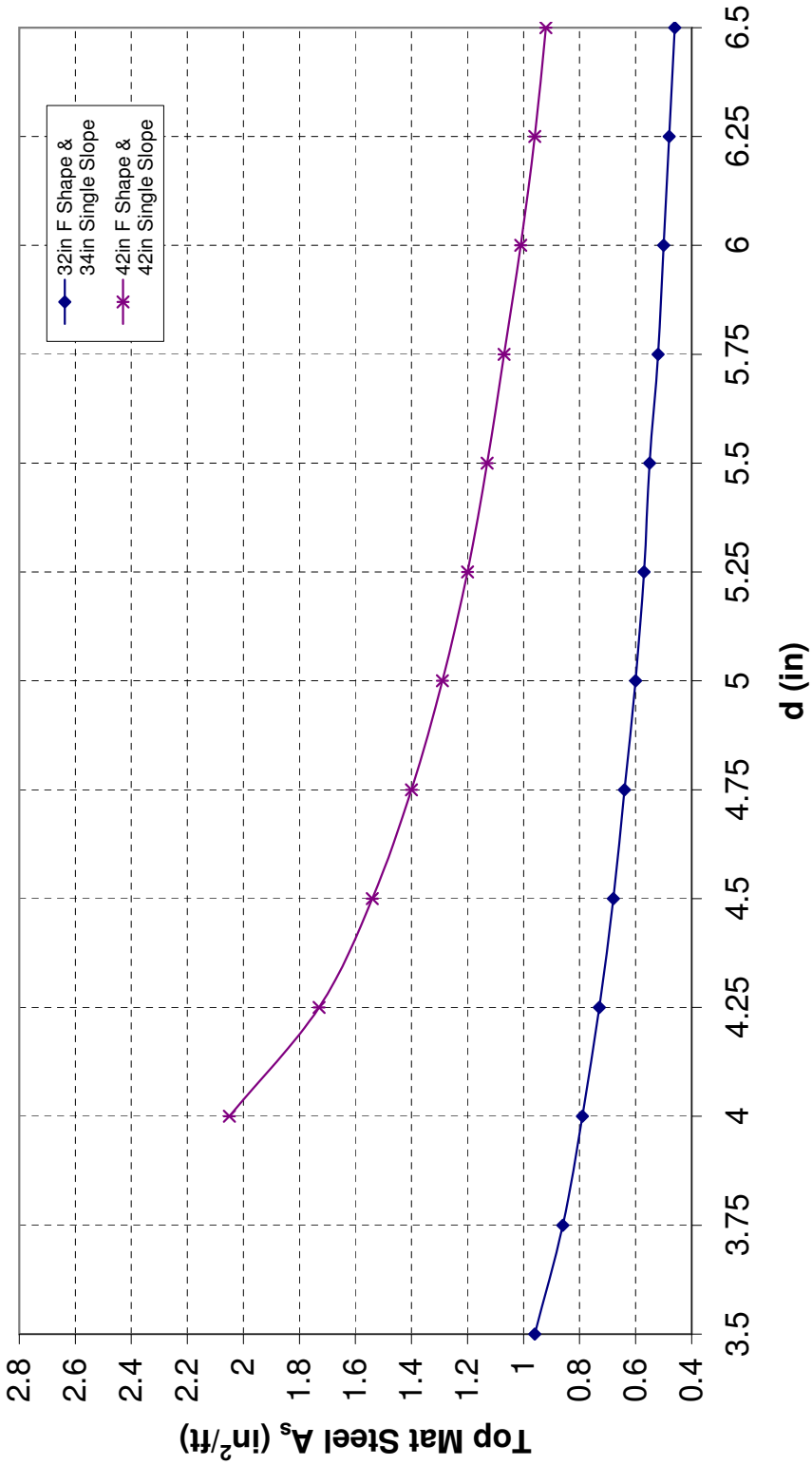

Notes:

1. Top and bottom mats each carry one-half the tension impact load.
2. Only Design Case 1 of LRFD A13.4.1 is considered. Designer must also check Design Cases 2 and 3.
3. Section considered is a vertical section through the slab overhang at the toe of the barrier.

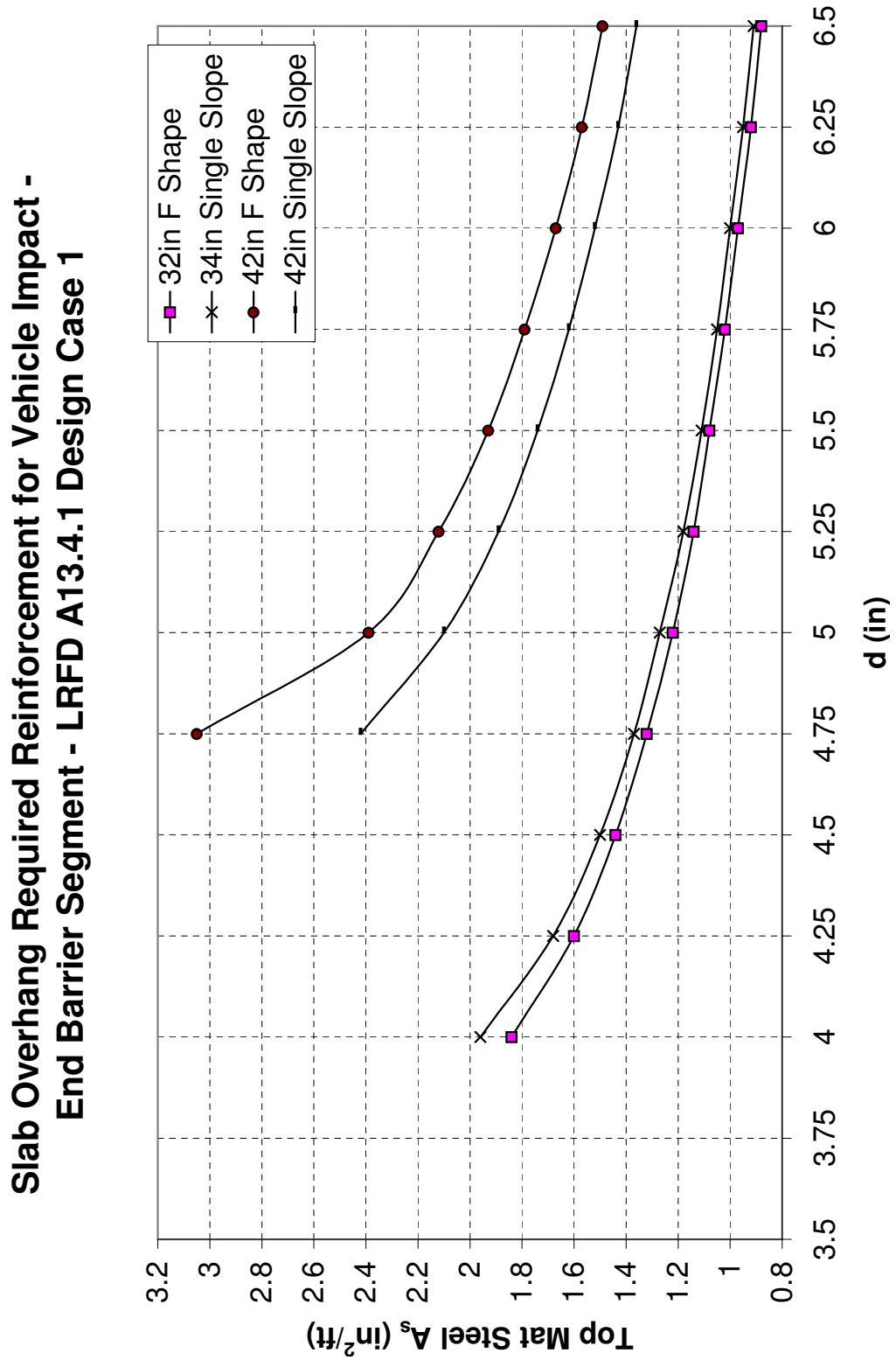

Notes:

1. Top and bottom mats each carry one-half the tension impact load.
2. Only Design Case 1 of LRFD A13.4.1 is considered. Designer must also check Design Cases 2 and 3.
3. Section considered is a vertical section through the slab overhang at the toe of the barrier.

Appendix 5.6-A1-1 Span Capability of W Girders

Girder Type	Girder Spacing (ft)	CL Bearing to CL Bearing (ft)	"A" Dim. (in)	Deck Thickness (in)	Shipping Weight (kips)
W42G	5	85	10.25	7.50	36
	6	80	10.25	7.50	34
	7	75	10.00	7.50	32
	8	70	10.00	7.50	30
	9	65	9.75	7.50	28
	10	60	9.75	7.75	26
	11	55	10.00	8.25	24
	12	50	10.00	8.50	22
W50G	5	115	11.00	7.50	69
	6	110	11.00	7.50	66
	7	105	10.75	7.50	63
	8	100	10.75	7.50	60
	9	95	10.50	7.50	57
	10	90	10.50	7.75	54
	11	85	10.75	8.00	51
	12	80	11.00	8.50	48
W58G	5	130	11.25	7.50	89
	6	125	11.25	7.50	86
	7	120	11.00	7.50	82
	8	115	11.00	7.50	79
	9	110	11.00	7.50	76
	10	105	10.75	7.50	72
	11	100	11.25	8.00	69
	12	95	11.50	8.50	66
W74G	5	150	11.00	7.50	127
	6	145	11.00	7.50	123
	7	140	11.25	7.50	119
	8	135	11.00	7.50	114
	9	130	11.00	7.50	110
	10	125	11.00	7.50	106
	11	120	11.25	7.75	102
	12	115	11.25	8.00	98

Design Parameters:

- PGSuper version 2.2.3.0
- Girder f'_{ci} = 7.5 ksi, f'_c = 9.0 ksi
- Slab f'_c = 4.0 ksi
- No horizontal or vertical curve
- 2% roadway crown slope
- Standard WSDOT "F" shape barrier
- 6% roadway superelevation for shipping check
- Standard WSDOT Abutment End Type A
- Includes 2″ future HMA overlay with density of 140 pcf

Girder Type	Girder Spacing (ft)	CL Bearing to CL Bearing (ft)	"A" Dim. (in)	Deck Thickness (in)	Shipping Weight (kips)
WF36G	5	105	11.25	7.50	83
	6	100	11.25	7.50	79
	7	95	11.25	7.50	76
	8	95	11.25	7.50	76
	9	90	11.25	7.50	72
	10	85	11.25	7.50	68
	11	85	11.00	7.50	68
	12	80	11.00	8.00	64
WF42G	5	120	11.25	7.50	100
	6	115	11.25	7.50	96
	7	110	11.50	7.50	92
	8	105	11.25	7.50	88
	9	100	11.25	7.50	84
	10	95	11.25	7.50	80
	11	90	11.25	7.50	75
	12	90	11.50	8.00	75
WF50G	5	140	11.00	7.50	124
	6	135	11.25	7.50	119
	7	125	11.25	7.50	111
	8	120	11.50	7.50	107
	9	115	11.25	7.50	102
	10	110	11.25	7.50	98
	11	110	11.25	7.50	98
	12	105	11.50	8.00	94
WF58G	5	155	10.75	7.50	145
	6	150	11.00	7.50	141
	7	145	11.25	7.50	136
	8	140	11.25	7.50	132
	9	135	11.25	7.50	127
	10	130	11.25	7.50	122
	11	120	11.25	7.50	113
	12	120	11.50	8.00	113
WF66G	5	165	10.75	7.50	164
	6	160	10.75	7.50	159
	7	155	11.00	7.50	154
	8	150	11.25	7.50	149
	9	145	11.25	7.50	144
	10	140	11.50	7.50	139
	11	135	11.25	7.50	135
	12	130	11.75	8.00	130
WF74G	5	175	10.50	7.50	183
	6	170	10.75	7.50	178
	7	165	11.00	7.50	173
	8	160	11.00	7.50	168
	9	155	11.25	7.50	163
	10	150	11.25	7.50	157
	11	145	11.25	7.50	152

	12	140	11.75	8.00	147
WF83G	5	190	10.00	7.50	210
	6	185	10.50	7.50	204
	7	180	10.50	7.50	199
	8	170	10.75	7.50	188
	9	165	11.00	7.50	183
	10	160	11.00	7.50	177
	11	155	11.00	7.50	172
	12	150	11.50	8.00	166
WF95G	5	190	9.50	7.50	226
	6	185	9.75	7.50	220
	7	175	10.25	7.50	208
	8	175	10.50	7.50	208
	9	170	10.75	7.50	202
	10	165	10.75	7.50	196
	11	160	11.00	7.50	191
	12	155	11.25	8.00	185
WF100G	5	205	9.50	7.50	251
	6	200	10.00	7.50	245
	7	195	10.00	7.50	239
	8	185	10.25	7.50	227
	9	180	10.50	7.50	221
	10	175	10.50	7.50	215
	11	170	10.50	7.50	209
	12	165	11.25	8.00	203

Design Parameters:

- PGSuper version 2.2.3.0
- Girder f'_{ci} = 7.5 ksi, f'_c = 9.0 ksi
- Slab f'_c = 4.0 ksi
- No horizontal or vertical curve
- 2% roadway crown slope
- Standard WSDOT "F" shape barrier
- 6% roadway superelevation for shipping check
- Standard WSDOT Abutment End Type A
- Includes 2″ future HMA overlay with density of 140 pcf

Span Capability of Bulb Tee Girders

Girder Type	Girder Spacing (ft)	CL Bearing to CL Bearing (ft)	"A" Dim. (in)	Deck Thickness (in)	Shipping Weight (kips)
W32BTG	5	80	11.25	7.50	49
	6	75	11.25	7.50	46
	7	75	11.25	7.50	46
	8	70	11.00	7.50	43
	9	65	10.75	7.50	40
	10	65	10.75	7.50	40
	11	60	10.50	7.50	37
	12	60	11.00	8.00	37
W38BTG	5	95	12.00	7.50	62
	6	90	11.75	7.50	59
	7	85	11.50	7.50	56
	8	80	11.25	7.50	53
	9	75	11.00	7.50	50
	10	75	11.00	7.50	50
	11	70	10.75	7.50	46
	12	70	11.25	8.00	46
W62BTG	5	135	11.50	7.50	110
	6	130	11.50	7.50	106
	7	125	11.75	7.50	102
	8	120	11.75	7.50	98
	9	115	11.50	7.50	94
	10	110	11.50	7.50	90
	11	105	11.25	7.50	86
	12	100	11.75	8.00	82

Design Parameters:

- PGSuper version 2.2.3.0
- Girder f'_{ci} = 7.5 ksi, f'_c = 9.0 ksi
- Slab f'_c = 4.0 ksi
- No horizontal or vertical curve
- 2% roadway crown slope
- Standard WSDOT "F" shape barrier
- 6% roadway superelevation for shipping check
- Standard WSDOT Abutment End Type A
- Includes 2″ future HMA overlay with density of 140 pcf

Girder Type	Girder Width (ft)	CL Bearing to CL Bearing (ft)	Excess Camber (in)
W35DG	4	95	4.38
	5	90	3.98
	6	85	3.82
W41DG	4	110	4.34
	5	105	4.50
	6	100	4.33
W53DG	4	135	4.29
	5	130	4.51
	6	120	4.51
W65DG	4	155	3.46
	5	145	3.71
	6	140	3.97

Design Parameters:

- PGSuper version 2.2.3.0
- Girder f'_{ci} = 7.5 ksi, f'_c = 9.0 ksi
- Slab f'_c = 4.0 ksi
- No horizontal or vertical curve
- 2% roadway crown slope
- Standard WSDOT "F" shape barrier
- 6% roadway superelevation for shipping check
- Standard WSDOT Abutment End Type A
- Includes 2″ future HMA overlay with density of 140 pcf

Span Capability of Slab Girders with 5″ CIP Topping

Girder Type	CL Bearing to CL Bearing (ft)	"A" Dim. (in)	Girder Width (ft)	Shipping Weight (kips)
1'-0" Solid	20	5.25	4.00	14
	25	5.25	4.00	17
	30	5.50	4.00	20
	31	5.50	4.00	20
1'-6" Voided	35	5.25	4.00	28
	40	5.50	4.00	31
	45	5.75	4.00	35
	48	5.75	4.00	37
2'-2" Voided	55	5.50	4.00	60
	60	5.75	4.00	65
	65	5.75	4.00	70
	70	5.75	4.00	75
2'-6" Voided	65	5.50	4.33	79
	70	5.75	4.33	85
	75	5.50	4.33	91
	80	5.75	4.33	96
3'-0" Voided	85	5.50	5.00	137
	90	5.50	5.00	144
	95	5.50	5.00	152
	98	5.50	5.00	157

Design Parameters:

- PGSuper version 2.2.3.0
- Girder f'_{ci} = 7.5 ksi, f'_c = 9.0 ksi
- CIP Slab f'_c = 4.0 ksi
- No horizontal or vertical curve
- 2% roadway crown slope
- Standard WSDOT "F" shape barrier
- 6% roadway superelevation for shipping check
- Standard WSDOT Abutment End Type A
- Includes 2″ future HMA overlay with density of 140 pcf

Girder Type	Girder Spacing (ft)	CL Bearing to CL Bearing (ft)	"A" Dim. (in)	Deck Thickness (in)	Shipping Weight (kips)
U54G4	8	130	8.25	7.50	153
	10	125	8.25	7.50	147
	12	120	8.50	7.50	142
	14	115	8.50	7.50	136
U54G5	9	130	8.25	7.50	164
	11	125	8.50	7.50	158
	13	120	8.75	7.50	151
	15	115	8.50	7.50	145
U66G4	8	150	8.25	7.50	205
	10	145	8.25	7.50	198
	12	140	8.25	7.50	192
	14	130	8.50	7.50	178
U66G5	9	150	8.25	7.50	217
	11	145	8.25	7.50	210
	13	140	8.25	7.50	203
	15	135	8.50	7.50	196
U78G4	8	170 #	8.25	7.50	264
	10	160	8.25	7.50	249
	12	155	8.25	7.50	242
	14	145	8.50	7.50	226
	16	135	9.00	8.00	211
U78G5	9	170 #	8.25	7.50	278
	11	165 #	8.25	7.50	270
	13	160 #	8.25	7.50	262
	15	155 #	8.25	7.50	254
	17	150	8.75	8.00	246

Span capability exceeds maximum shipping weight of 252 kips

Design Parameters:

- PGSuper version 2.2.3.0
- Girder f'_{ci} = 7.5 ksi, f'_c = 9.0 ksi
- Slab f'_c = 4.0 ksi
- No horizontal or vertical curve
- 2% roadway crown slope
- Standard WSDOT "F" shape barrier
- 6% roadway superelevation for shipping check
- Standard WSDOT Abutment End Type A
- Includes 2″ future HMA overlay with density of 140 pcf

Span Capability of Trapezoidal Tub Girders with Top Flange

Girder Type	Girder Spacing (ft)	CL Bearing to CL Bearing (ft)	"A" Dim. (in)	Deck Thickness (in)	Shipping Weight (kips)
UF60G4	9	150	9.25	8.50	205
	11	140	9.50	8.50	192
	13	135	9.75	8.50	185
	15	130	10.00	8.50	178
UF60G5	10	150	9.25	8.50	217
	12	145	9.25	8.50	210
	14	140	9.75	8.50	203
	16	135	9.75	8.50	196
UF72G4	9	160	9.25	8.50	249
	11	150	9.50	8.50	234
	13	145	9.75	8.50	226
	15	140	9.75	8.50	218
UF72G5	10	170 #	9.25	8.50	278
	12	160 #	9.25	8.50	262
	14	155 #	9.50	8.50	254
	16	150	9.50	8.50	246
UF84G4	10	180 #	9.25	8.50	314
	12	170 #	9.25	8.50	297
	14	165 #	9.50	8.50	288
	16	160 #	9.75	8.50	280
UF84G5	11	180 #	9.25	8.50	329
	13	175 #	9.25	8.50	320
	15	165 #	9.50	8.50	302
	17	160 #	9.50	8.50	293

Span capability exceeds maximum shipping weight of 252 kips

Design Parameters:

- PGSuper version 2.2.3.0
- Girder f'_{ci} = 7.5 ksi, f'_c = 9.0 ksi
- CIP slab f'_c = 4.0 ksi
- No horizontal or vertical curve
- 2% roadway crown slope
- Standard WSDOT "F" shape barrier
- 6% roadway superelevation for shipping check
- Standard WSDOT Abutment End Type A
- Includes 2″ future HMA overlay with density of 140 pcf
- Deck includes a 3.5″ SIP panel with a 5″ CIP slab

f'ci = 6.0 ksi, f'c = 9 ksi Strand diameter = 0.6" Grade 270 ksi low relaxation												
Girder Type	Girder Spacing (ft)	Span Length (ft)	Cast-in-place Closures	PT Ducts - Strands/Duct (Duct#4 @ Bottom)				Jacking Force** (kips)	Tendon Force after Seating** (kips)	Tendson Loss* (kips)	E1 (in)	E3 (in)
			Length (ft)	1	2	3	4					
WF74PTG Post-tensioned Before Slab Casting	6	170	2	-	22	22	22	2970	2680	730	36.4	12.7
	8	155	2	-	22	22	22	2970	2670	740	36.4	12.7
	10	140	2	-	22	22	22	2970	2650	760	36.4	12.7
	12	120	2	-	22	22	22	2970	2630	780	36.4	12.7
	14	100	2	-	22	22	22	2970	2590	815	36.4	12.7
WF74PTG Post-tensioned After Slab Casting	6	195	2	-	22	22	22	2960	2690	680	36.4	12.7
	8	185	2	-	22	22	22	2960	2710	680	36.4	12.7
	10	175	2	-	22	22	22	2960	2690	690	36.4	12.7
	12	165	2	-	22	22	22	2990	2720	700	36.4	12.7
	14	155	2	-	22	22	22	3020	2750	710	36.4	12.7
WF83PTG Post-tensioned Before Slab Casting	6	185	2	11	22	22	22	3500	3160	850	33.8	14.5
	8	165	2	-	22	22	22	2985	2710	720	36.4	12.7
	10	155	2	-	22	22	22	2985	2700	730	36.4	12.7
	12	135	2	-	22	22	22	2985	2680	740	36.4	12.7
	14	115	2	-	22	22	22	2985	2620	810	33.8	12.7
WF83PTG Post-tensioned After Slab Casting	6	*205	2	11	22	22	22	3500	3200	810	33.8	14.5
	8	200	2	11	22	22	22	3500	3210	800	37.6	14.5
	10	195	2	22	22	22	22	4000	3640	940	37.6	15.7
	12	185	2	22	22	22	22	4000	3640	940	37.6	15.7
	14	175	2	22	22	22	22	4000	3640	940	37.6	15.7
WF95PTG Post-tensioned Before Slab Casting	6	200	2	11	22	22	22	3500	3150	860	46.1	14.5
	8	185	2	11	22	22	22	3500	3110	980	46.1	14.5
	10	175	2	11	22	22	22	3500	3130	880	46.1	14.5
	12	155	2	8	22	22	22	3360	2990	860	44.9	14.1
	14	135	2	-	22	22	22	3000	2630	810	59.0	12.7
WF95PTG Post-tensioned After Slab Casting	6	235	2	11	22	22	22	3500	3210	800	46.1	14.5
	8	230	2	22	22	22	22	4000	3650	930	37.6	15.7
	10	215	2	22	22	22	22	4000	3640	940	37.6	15.7
	12	205	2	22	22	22	22	4000	3640	950	37.6	15.7
	14	190	2	22	22	22	22	4000	3630	960	37.6	15.7

* Controlled by over-reinforced section (see LRFD Sec. 5.7.3.3)

** Total force calculated at jacking end of post-tensioned girder (rounded to the nearest 10)

Design Parameters:

- PGSplice V. 0.3
- WSDOT BDM LRFD design criteria
- No vertical or horizontal curve
- 2.0% roadway crown slope
- Interior girder with barrier load (6 girder bridge)
- Only flexural service and strength checked; lifting and hauling checks not necessarily satisfed
- Simple girder span lengths are CL bearing to CL bearing
- Slab f'_c = 4.0 ksi
- Standard WSDOT “F” shape barrier
- Under normal exposure condition and 75% relative humidity
- Spans reported in 5′-0″ increments
- Designs based on “normally” reinforced sections (c/de < 0.42 LRFD 5.7.3.3)
- Designs based on 22 strands/duct
- For 6′-10′ girder spacing -- 7.5″ slab
- For 12′ girder spacing -- 8.0″ slab
- For 14′ girder spacing -- 8.75″ slab
- Girders post-tensioned before slab pour are assumed to be post-tensioned adjacent to structure.
- All spec checks at wet joints have been ignored. It isassumed that the designer can modify the wet joints to reach the required span as shown in the table. These modifcations are outside the scope of this table.

Girder Type	Girder Spacing (ft)	Span Length (ft)	End Segments	Middle Segment	Spliced Post-tensioned Girder								
			No. of Straight Strands	No. of Straight Strands	PT Ducts ~ Strands/Duct (Duct #4 @ Bottom)				Jacking Force* (kips)	Tendon Force after Seating* (kips)	Tendon Loss* (kips)	E1 (in)	E3 (in)
					1	2	3	4					
U54PTG4	8	135	4	6	-	-	11	22	2904	2636	570	20.0	8.9
	14	150	4	14	-	2	22	22	4048	3708	760	31.5	10.1
U54PTG5	9	135	4	8	-	-	12	22	2992	2764	578	19.7	9.0
	15	150	4	14	-	6	22	22	4400	4032	826	29.8	10.9
U54PTG6	10	135	4	6	-	-	18	22	3520	3200	684	18.3	9.5
	16	145	4	14	-	8	22	22	4576	4196	852	29.0	11.2
U66PTG4	8	155	4	8	-	-	15	22	3256	2944	648	18.9	9.3
	14	170	4	16	-	7	22	22	4488	4088	864	29.4	11.0
U66PTG5	9	155	4	8	-	-	17	22	3432	3110	678	18.5	9.4
	15	170	4	16	-	10	22	22	4752	4334	910	29.3	11.3
U66PTG6	10	155	4	8	-	-	21	22	3784	3434	742	17.7	9.7
	16	165	4	14	-	12	22	22	4928	4500	940	27.7	11.7
U78PTG4	8	175	4	10	-	-	19	22	3608	3262	722	18.1	9.6
	16	190	4	20	-	15	22	22	5192	4718	1014	26.8	12.1
U78PTG5	9	180	4	10	-	2	22	22	4048	3692	776	31.5	10.1
	17	195	4	22	-	21	22	22	5720	5202	1110	25.2	12.6
U78PTG6	10	180	4	10	-	6	22	22	4400	4018	840	29.8	10.9
	18	190#	4	20	2	22	22	22	5896	5400	1104	395.0	12.9

Total force calculated at jacking end of post-tensioned girder

Span capability exceeds maximum shipping weight of 200 kips

Design Parameters:

- PGSplice V. 0.3
- WSDOT BDM LRFD design criteria
- No vertical or horizontal curve
- 2.0% roadway crown slope
- Interior girder with barrier load (6 girder bridge)
- Only flexural service and strength checked; lifting and hauling checks not necessarily satisfied
- Simple girder span lengths are CL bearing to CL bearing
- Standard WSDOT “F” shape barrier
- Under normal exposure condition and 75% humidity
- Spans reported in 5′-0″ increments
- “A” dimension = deck thickness + 2″
- Closure pour for spliced girders is 2′, f'_{ci} = 6.0 ksi, f'_c = 9 ksi
- Girder f'_{ci} = 6.0 ksi, f'_c = 9.0 ksi, slab f'_c = 4.0 ksi
- Girders are spliced in-place after slab is cast
- Prestressing and post-tensioning steel is 0.6″ diameter, Grade 270
- End segments are 25% of total length; center segment is 50% of total length
- Range of applicability requirements in LRFD ignored; span lengths may be longer than allowed by LRFD
- Designs are based on a 22 diameter strand limit per 4″ duct for high pressure grout
- All spec checks at wet joints have been ignored. It is assumed that the designer can modify the wet joints to reach the required span as shown in the table. These modifications are outside the scope of this table.

PRECAST PRESTRESSED GIRDERS

GIRDER DEPTH	2'-8" TO 3'-0"	3'-2" TO 3'-6"	4'-2"	4'-10"	5'-2" TO 5'-6"	6'-2"	6'-10⅝"	7'-10½"	8'-4"
W GIRDERS		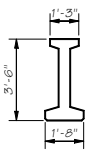 W42G SPAN LENGTH = 80 FT.	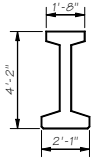 W50G SPAN LENGTH = 110 FT.	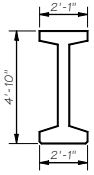 W58G SPAN LENGTH = 120 FT.		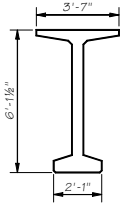 W74G SPAN LENGTH = 140 FT.			
WIDE FLANGE GIRDERS	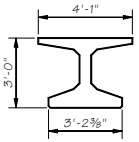 WF36G SPAN LENGTH = 100 FT.	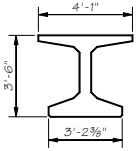 WF42G SPAN LENGTH = 110 FT.	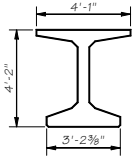 WF50G SPAN LENGTH = 130 FT.	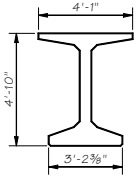 WF58G SPAN LENGTH = 145 FT.	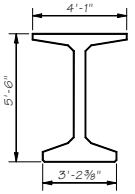 WF66G SPAN LENGTH = 155 FT.	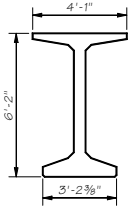 WF74G SPAN LENGTH = 165 FT.	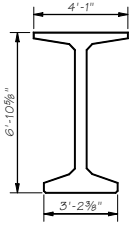 WF83G SPAN LENGTH = 175 FT.	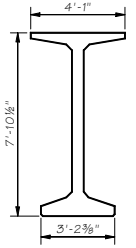 WF95G SPAN LENGTH = 190 FT.	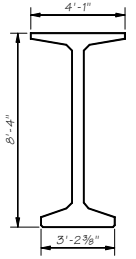 WF100G SPAN LENGTH = 210 FT.
BULB-TEE GIRDERS	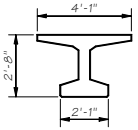 W32BTG SPAN LENGTH = 75 FT.	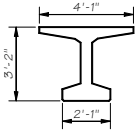 W38BTG SPAN LENGTH = 90 FT.			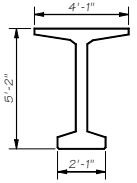 W62BTG SPAN LENGTH = 135 FT.				

NOTES:

1. SPAN LENGTHS SHOWN ARE THE MAXIMUM FOR EACH TYPE OF GIRDER USING PGSUPER PROGRAM.
2. THE CONCRETE COMPRESSIVE STRENGTHS FOR STANDARD DESIGNS ARE LIMITED TO 7.5 ksi AT TRANSFER AND 9.0 ksi AT FINAL.
3. THE DESIGN IS BASED ON 0.6" DIAM. LOW RELAXATION PRESTRESSING STRANDS.

Last revised on : 5/6/2009

Bridge Design Engr.	M:\STANDARDS\Girders\Design Charts\STD PC GIRDERS.MAN				REGION NO.	STATE	FED. AID PROJ. NO.	SHEET NO.	TOTAL SHEETS
Supervisor					10	WASH.			
Designed By									
Checked By					JOB NUMBER				
Detailed By									
Bridge Projects Engr.									
Prelim. Plan By									
Architect/Specialist	DATE	REVISION	BY	APPD					

Thu Sep 02 14:21:16 2010

BRIDGE AND STRUCTURES OFFICE

Washington State Department of Transportation

STANDARD PRESTRESSED CONCRETE GIRDERS

I-GIRDER SECTIONS

BRIDGE SHEET NO. | SHEET | OF | SHEETS

LTR | DESIGN | DRAWN | CHECKED | SUBMITTED | DATE | BRIDGE ENGINEER | NO. | REVISION | BY | APPD | DATE

5.6-A1-10

PRECAST PRESTRESSED SHORT SPAN AND DECK GIRDERS

GIRDER DEPTH	1'-0"	1'-6" TO 1'-8"	2'-2" TO 2'-4"	2'-6" TO 2'-11"	3'-0" TO 3'-5"	4'-5"	5'-5"
DECK BULB TEES				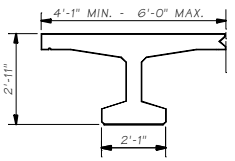 W35DG SPAN LENGTH = 90 FT.	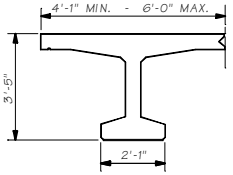 W41DG SPAN LENGTH = 105 FT.	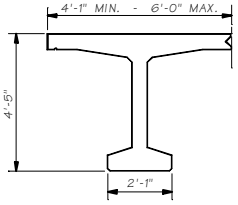 W53DG SPAN LENGTH = 125 FT.	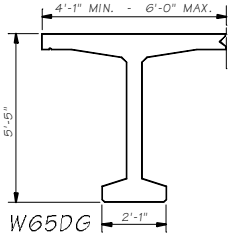 W65DG SPAN LENGTH = 145 FT.
DOUBLE TEES		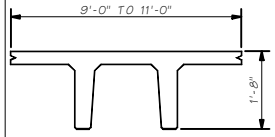 DOUBLE-TEE GIRDERS SPAN LENGTH = 25 FT.	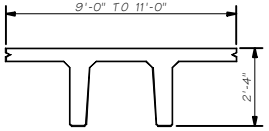 DOUBLE-TEE GIRDERS SPAN LENGTH = 40 FT.		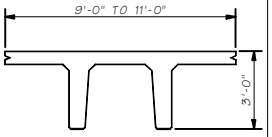 DOUBLE-TEE GIRDERS SPAN LENGTH = 55 FT.		
TRI-BEAM			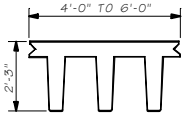 RIBBED GIRDERS SPAN LENGTH = 60 FT.				
SLABS	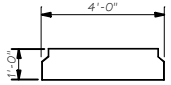 12" DEEP SLAB SPAN LENGTH = 33 FT.	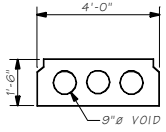 18" DEEP SLAB SPAN LENGTH = 50 FT.	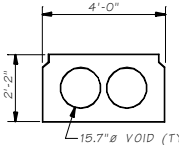 26" DEEP SLAB SPAN LENGTH = 72 FT.	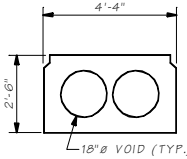 30" DEEP SLAB SPAN LENGTH = 83 FT.	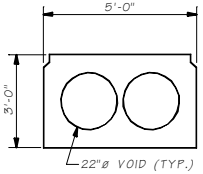 36" DEEP SLAB SPAN LENGTH = 100 FT.		

NOTES:

1. SPAN LENGTHS SHOWN ARE THE MAXIMUM FOR EACH TYPE OF GIRDER.
2. 5" CAST-IN-PLACE COMPOSITE SLAB SHALL BE PROVIDED FOR PRECAST SLABS.
3. SPAN LENGTHS SHOWN ARE FOR NON-COMPOSITE DECKED MEMBERS WITH 3" HMA OVERLAY (EXCEPT SLABS).
4. DECKED MEMBERS COULD BE DESIGNED AS COMPOSITE MEMBERS USING PGSUPER PROGRAM IF A MINIMUM OF 5" CAST-IN-PLACE SLAB IS PROVIDED.
5. THE CONCRETE COMPRESSIVE STRENGTHS FOR STANDARD DESIGNS ARE LIMITED TO 6.0 ksi AT TRANSFER AND 8.0 ksi AT FINAL.
6. THE DESIGN IS BASED ON 0.6" DIAM. LOW RELAXATION PRESTRESSING STRANDS.

Bridge Design Engr.	M:\STANDARDS\Girders\Design Charts\STD PC NON COMP DECK GIRDERS.MAN				REGION NO.	STATE	FED. AID PROJ. NO.	SHEET NO.	TOTAL SHEETS
Supervisor					10	WASH.			
Designed By					JOB NUMBER				
Checked By									
Detailed By									
Bridge Projects Engr.									
Prelim. Plan By									
Architect/Specialist	DATE	REVISION	BY	APP'D					

Thu Jul 07 15:27:52 2011

BRIDGE AND STRUCTURES OFFICE

Washington State Department of Transportation

STANDARD PRESTRESSED CONCRETE GIRDERS

DECKED GIRDER SECTIONS

BRIDGE SHEET NO. | SHEET | OF | SHEETS

Last revised on : 6/21/2011

JEFFRIS
JOB
SRS

5.6-A1-11

PRECAST POST-TENSIONED SPLICED GIRDERS

	4'-6", 5'-0", 5'-6", 6'-0", 6'-2", 6'-6"		6'-10⅝", 7'-0"	7'-10½"	8'-4"
SPLICED WF-GIRDERS		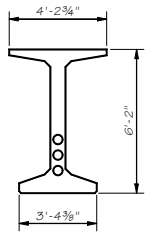 WF74PTG SPAN LENGTH = 170 FT.*, 195 FT.**	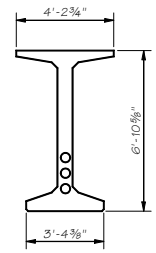 WF83PTG SPAN LENGTH = 185 FT.*, 205 FT.**	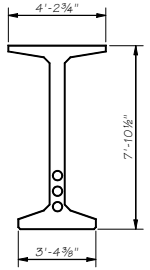 WF95PTG SPAN LENGTH = 200 FT.*, 235 FT.**	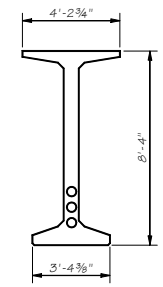 WF100PTG SPAN LENGTH = 230 FT.*, 255 FT.**
SPLICED TUB GIRDERS	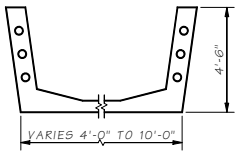 POST-TENSIONED TUB SECTION SPAN LENGTH = 150 FT.	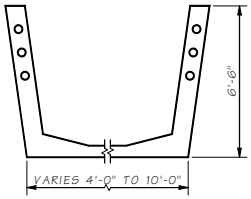 POST-TENSIONED TUB SECTION SPAN LENGTH = 180 FT.			
SPLICED FLANGED TUB GIRDERS	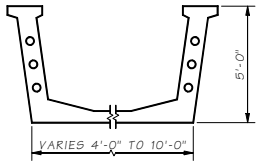 POST-TENSIONED TUB SECTION FOR S-I-P DECK PANEL SPAN LENGTH = 160 FT.		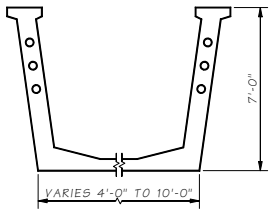 POST-TENSIONED TUB SECTION FOR S-I-P DECK PANEL SPAN LENGTH = 180 FT.		

NOTES:

1. SPAN LENGTHS SHOWN ARE THE MAXIMUM FOR EACH TYPE OF GIRDER USING PGSPLICE PROGRAM.
2. THE CONCRETE COMPRESSIVE STRENGTHS FOR STANDARD DESIGNS ARE LIMITED TO 7.5 ksi AT TRANSFER AND 9.0 ksi AT FINAL.
3. THE DESIGN IS BASED ON 0.6" DIAM. LOW RELAXATION PRESTRESSING STRANDS.
4. STRENGTH OF CONCRETE AT THE CLOSURES SHALL NOT EXCEED 6.0 ksi FOR POST-TENSIONING BEFORE SLAB CASTING AND 4.0 ksi FOR POST-TENSIONING AFTER SLAB CASTING.
5. POST-TENSIONED TUB SECTIONS MAY BE CURVED.

* POST-TENSIONED BEFORE SLAB CASTING.

** POST-TENSIONED AFTER SLAB CASTING.

Last revised on : 5/6/2009

Bridge Design Engr.	M:\STANDARDS\Girders\Design Charts\STD PC PT SPLICED GIRDERS.MAN								
Supervisor					REGION NO.	STATE	FED. AID PROJ. NO.	SHEET NO.	TOTAL SHEETS
Designed By					10	WASH.			
Checked By									
Detailed By					JOB NUMBER				
Bridge Projects Engr.									
Prelim. Plan By									
Architect/Specialist	DATE	REVISION	BY	APP'D					

BRIDGE AND STRUCTURES OFFICE

Washington State Department of Transportation

STANDARD PRECAST POST-TENSIONED SPLICED GIRDERS

BRIDGE SHEET NO.

SHEET OF SHEETS

SR ____ JOB NO. ____ SHEET ____

Thu Sep 02 14:21:20 2010

PRECAST PRESTRESSED COMPOSITE TUB GIRDERS

GIRDER DEPTH	4'-6"	5'-0"	5'-6"	6'-0"
4'-0" WIDE	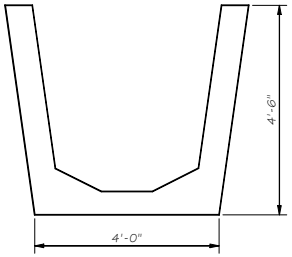 U54G4 SPAN LENGTH = 120 FT.	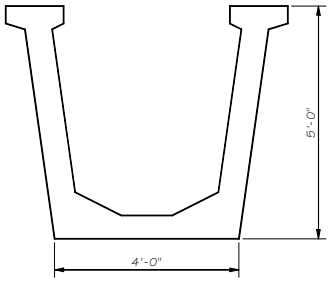 UF60G4 SPAN LENGTH = 140 FT.	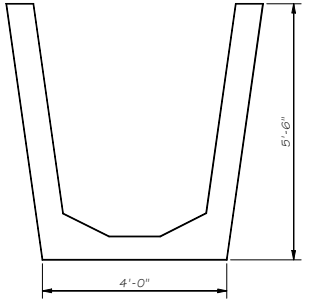 U66G4 SPAN LENGTH = 140 FT.	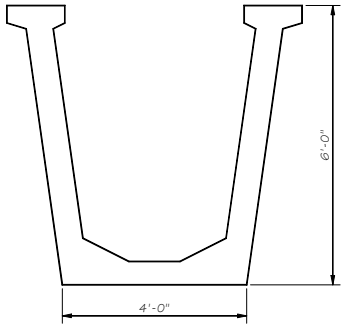 UF72G4 SPAN LENGTH = 155 FT.
5'-0" WIDE	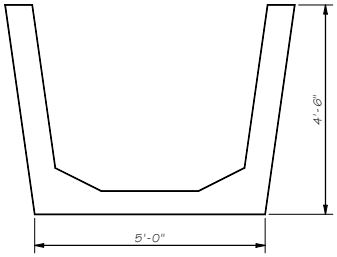 U54G5 SPAN LENGTH = 120 FT.	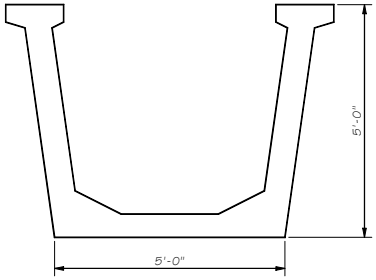 UF60G5 SPAN LENGTH = 145 FT.	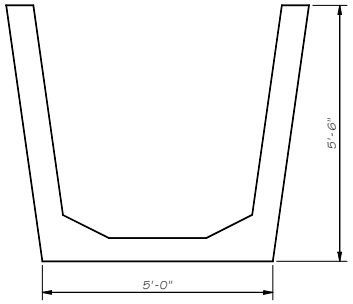 U66G5 SPAN LENGTH = 140 FT.	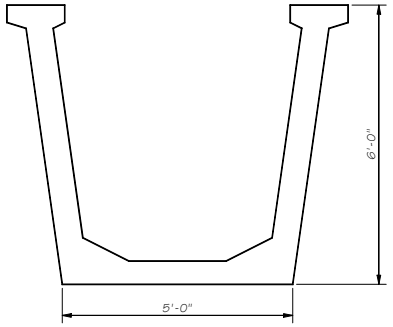 UF72G5 SPAN LENGTH = 160 FT.

NOTES:

1. SPAN LENGTHS SHOWN ARE THE MAXIMUM FOR EACH TYPE OF GIRDER USING PGSUPER PROGRAM.
2. THE CONCRETE COMPRESSIVE STRENGTHS FOR STANDARD DESIGNS ARE LIMITED TO 7.5 ksi AT TRANSFER AND 9.0 ksi AT FINAL.
3. THE DESIGN IS BASED ON 0.6" DIAM. LOW RELAXATION PRESTRESSING STRANDS.

Bridge Design Engr.	M:\STANDARDS\Girders\Design Charts\STD PC TUB GIRDERS.MAN				REGION NO.	STATE	FED. AID PROJ. NO.	SHEET NO.	TOTAL SHEETS
Supervisor					10	WASH.			
Designed By					JOB NUMBER				
Checked By									
Detailed By									
Bridge Projects Engr.									
Prelim. Plan By									
Architect/Specialist	DATE	REVISION	BY	APPD					

Thu Sep 02 14:21:22 2010

BRIDGE AND STRUCTURES OFFICE

Washington State Department of Transportation

STANDARD PRESTRESSED CONCRETE GIRDERS

TUB SECTIONS

BRIDGE SHEET NO.

SHEET OF SHEETS

SR JOB NO. SHEET

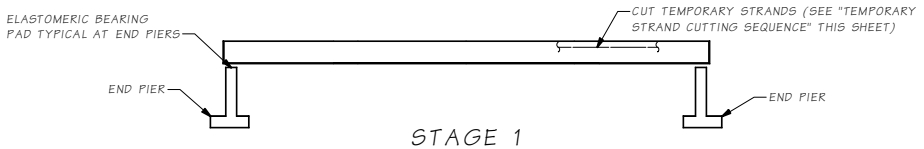

STAGE 1
SET GIRDERS IN PLACE

INSTALL TEMPORARY BRACING FOR ERECTION IN ACCORDANCE WITH SECTION 6-02.3(17)F.

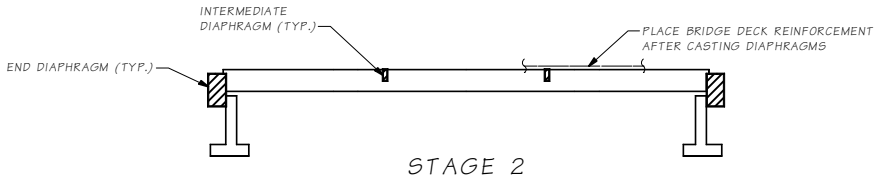

STAGE 2
CAST DIAPHRAGMS AND
PLACE BRIDGE DECK REINFORCEMENT

INSTALL TEMPORARY BRACING FOR DIAPHRAGM AND DECK PLACEMENT IN ACCORDANCE WITH SECTION 6-02.3(17)F.

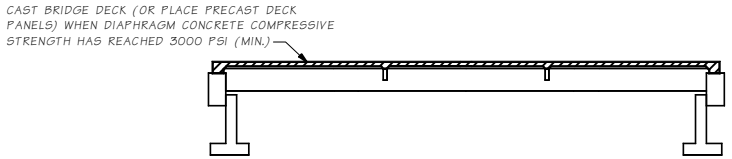

STAGE 3
CAST BRIDGE DECK

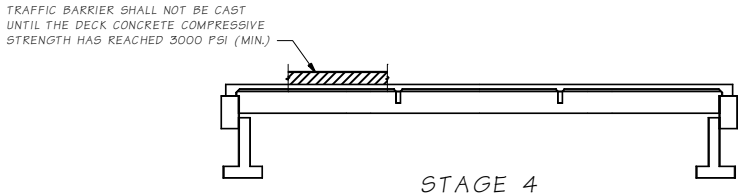

STAGE 4
CAST TRAFFIC BARRIERS

TEMPORARY STRAND CUTTING SEQUENCE

1. ERECT AND BRACE GIRDERS.
2. REMOVE EXPANDED POLYSTYRENE IN 2" x 6" RECESSES IN TOP FLANGE OF GIRDERS.
3. CUT STRANDS IN 2" x 6" RECESSES. STRANDS MAY BE CUT BY USING A CUTTING TORCH AND MOVING THE FLAME BACK AND FORTH OVER THE LENGTH OF EXPOSED STRAND TO LET INDIVIDUAL WIRES BREAK ONE AT A TIME TO LESSEN THE SHOCK TO THE GIRDER. STRANDS SHALL BE RELEASED IN A SYMMETRICAL MANNER AROUND THE GIRDER CENTERLINE STARTING WITH THOSE NEAREST THE CENTERLINE AND WORKING OUTWARDS.
4. REMOVE ALL MOISTURE IN RECESS PRIOR TO FILLING RECESS WITH GROUT.

CONSTRUCTION SEQUENCE ~ SUPERSTRUCTURE

Bridge Design Engr.	M:\Standards - In Progress\Girders\CONSTRUCTION SEQUENCE\CONSEQ-SINGLESPAN.MAN				REGION NO.	STATE	FED. AID PROJ. NO.	SHEET NO.	TOTAL SHEETS
Supervisor					10	WASH.			
Designed By					JOB NUMBER				
Checked By									
Detailed By									
Bridge Projects Engr.									
Prelim. Plan By									
Architect/Specialist	DATE	REVISION	BY	APP'D					

Fri Jul 15 12:00:40 2011

BRIDGE AND STRUCTURES OFFICE

Washington State Department of Transportation

STANDARD PRESTRESSED CONCRETE GIRDERS

SINGLE SPAN PRESTRESSED GIRDER CONSTRUCTION SEQUENCE

BRIDGE SHEET NO.

SHEET OF SHEETS

SR FILE NO. SHEET

Last revised on : 6/23/2011

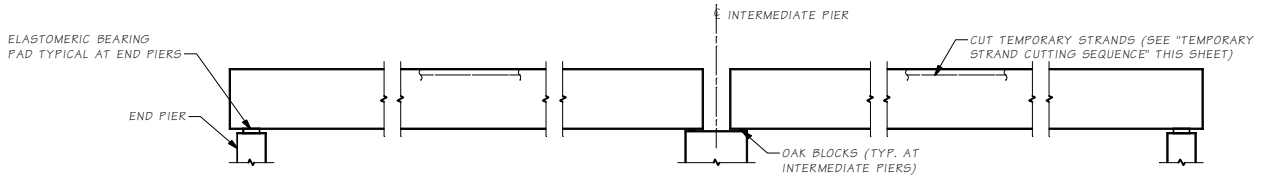

STAGE 1
SET GIRDERS IN PLACE

INSTALL TEMPORARY BRACING FOR ERECTION IN ACCORDANCE WITH SECTION 6-02.3(17)F.

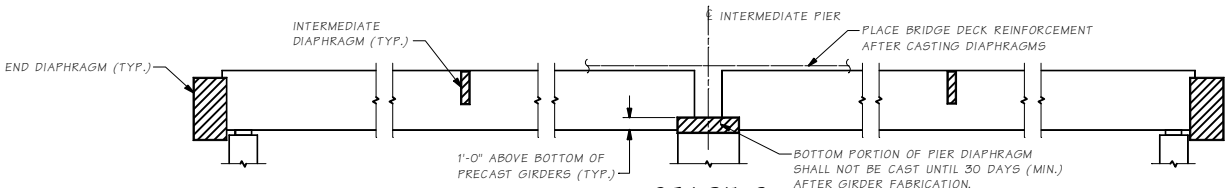

STAGE 2
CAST DIAPHRAGMS AND PLACE BRIDGE DECK REINFORCEMENT

INSTALL TEMPORARY BRACING FOR DIAPHRAGM AND DECK PLACEMENT IN ACCORDANCE WITH SECTION 6-02.3(17)F.

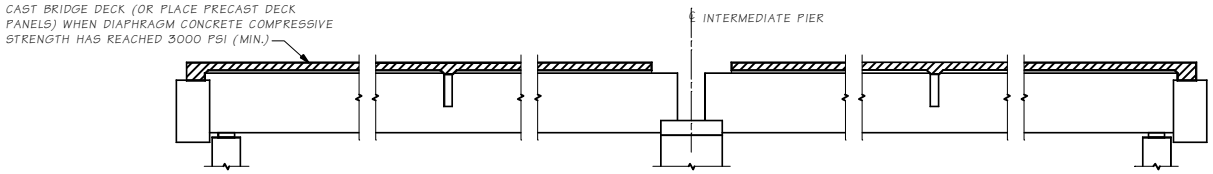

STAGE 3
CAST BRIDGE DECK

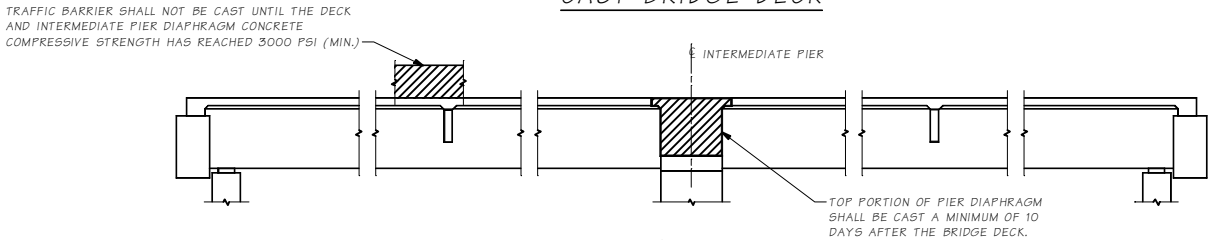

STAGE 4
COMPLETE DIAPHRAGMS

NOTE:
NO LIVE LOAD SHALL BE ALLOWED ON THE SPANS UNTIL THE COMPRESSIVE STRENGTH OF THE TOP PORTION OF THE PIER DIAPHRAGM HAS REACHED 3000 PSI (MIN.).

TEMPORARY STRAND CUTTING SEQUENCE

1. ERECT AND BRACE GIRDERS.
2. REMOVE EXPANDED POLYSTYRENE IN 2" x 6" RECESSES IN TOP FLANGE OF GIRDERS.
3. CUT STRANDS IN 2" x 6" RECESSES. STRANDS MAY BE CUT BY USING A CUTTING TORCH AND MOVING THE FLAME BACK AND FORTH OVER THE LENGTH OF EXPOSED STRAND TO LET INDIVIDUAL WIRES BREAK ONE AT A TIME TO LESSEN THE SHOCK TO THE GIRDER. STRANDS SHALL BE RELEASED IN A SYMMETRICAL MANNER AROUND THE GIRDER CENTERLINE STARTING WITH THOSE NEAREST THE CENTERLINE AND WORKING OUTWARDS.
4. REMOVE ALL MOISTURE IN RECESS PRIOR TO FILLING RECESS WITH GROUT.

CONSTRUCTION SEQUENCE ~ SUPERSTRUCTURE

Bridge Design Engr.	M:\Standards - In Progress\Girders\CONSTRUCTION SEQUENCE\CONSEQ_MULTIPLE_SPAN.MAN				REGION NO.	STATE	FED. AID PROJ. NO.	SHEET NO.	TOTAL SHEETS	BRIDGE AND STRUCTURES OFFICE
Supervisor					10	WASH.				Washington State Department of Transportation
Designed By										
Checked By					JOB NUMBER					MULTIPLE SPAN PRESTRESSED GIRDER CONSTRUCTION SEQUENCE
Detailed By										BRIDGE SHEET NO.
Bridge Projects Engr.										SHEET
Prelim. Plan By										OF
Architect/Specialist	DATE	REVISION	BY	APP'D						SHEETS

Fri Jul 15 12:00:39 2011

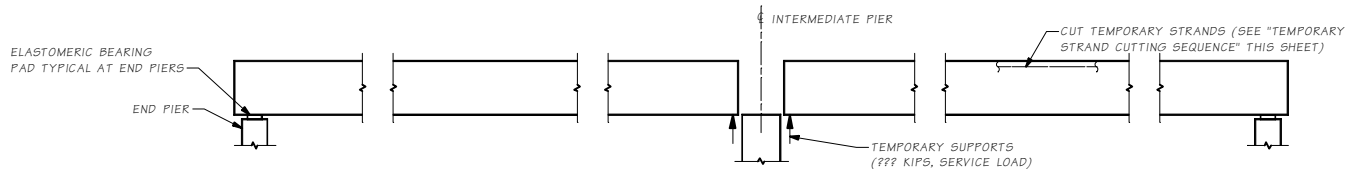

STAGE 1

SET GIRDERS ON TEMPORARY SUPPORT

INSTALL TEMPORARY BRACING FOR ERECTION IN ACCORDANCE WITH SECTION 6-02.3(17)F.

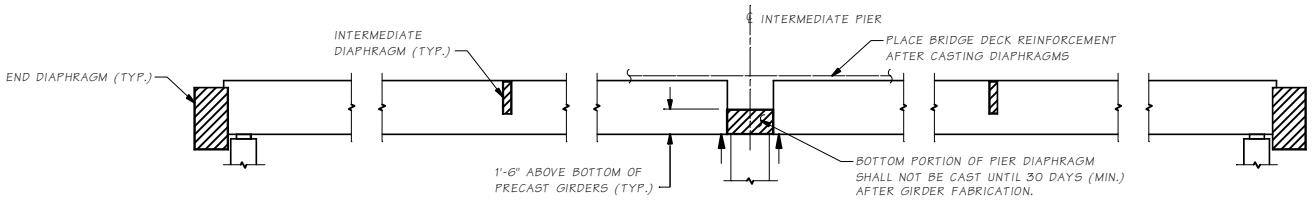

STAGE 2

CAST DIAPHRAGMS AND PLACE BRIDGE DECK REINFORCEMENT

INSTALL TEMPORARY BRACING FOR DIAPHRAGM AND DECK PLACEMENT IN ACCORDANCE WITH SECTION 6-02.3(17)F.

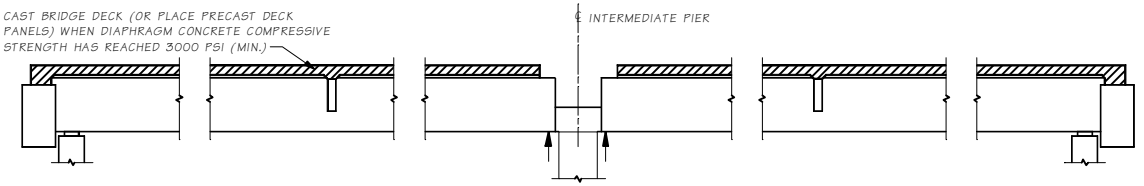

STAGE 3

CAST BRIDGE DECK

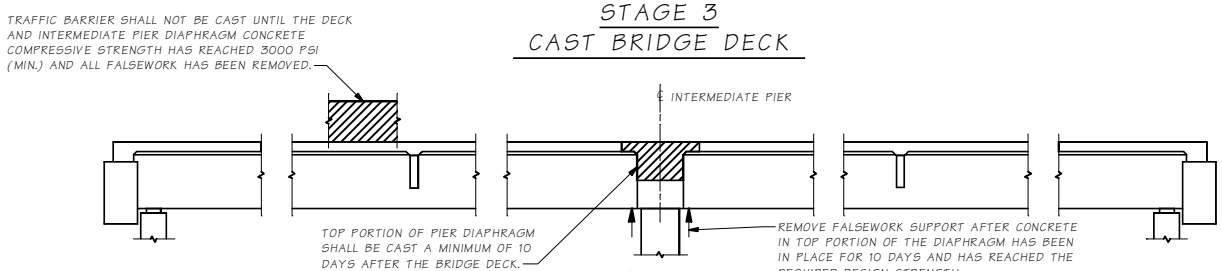

STAGE 4

COMPLETE DIAPHRAGMS AND REMOVE TEMPORARY SUPPORT

NOTE:
NO LIVE LOAD SHALL BE ALLOWED ON THE SPANS UNTIL THE COMPRESSIVE STRENGTH OF THE TOP PORTION OF THE PIER DIAPHRAGM HAS REACHED 3000 PSI (MIN.).

CONSTRUCTION SEQUENCE ~ SUPERSTRUCTURE

TEMPORARY STRAND CUTTING SEQUENCE

1. ERECT AND BRACE GIRDERS.
2. REMOVE EXPANDED POLYSTYRENE IN 2" x 6" RECESSES IN TOP FLANGE OF GIRDERS.
3. CUT STRANDS IN 2" x 6" RECESSES. STRANDS MAY BE CUT BY USING A CUTTING TORCH AND MOVING THE FLAME BACK AND FORTH OVER THE LENGTH OF EXPOSED STRAND TO LET INDIVIDUAL WIRES BREAK ONE AT A TIME TO LESSEN THE SHOCK TO THE GIRDER. STRANDS SHALL BE RELEASED IN A SYMMETRICAL MANNER AROUND THE GIRDER CENTERLINE STARTING WITH THOSE NEAREST THE CENTERLINE AND WORKING OUTWARDS.
4. REMOVE ALL MOISTURE IN RECESS PRIOR TO FILLING RECESS WITH GROUT.

Bridge Design Engr.	M:\Standards - In Progress\Girders\CONSTRUCTION SEQUENCE\CONSEQ-RAISED.man				REGION NO.	STATE	FED. AID PROJ. NO.	SHEET NO.	TOTAL SHEETS	BRIDGE AND STRUCTURES OFFICE
Supervisor					10	WASH.				
Designed By					JOB NUMBER					
Checked By										
Detailed By										
Bridge Projects Engr.										
Prelim. Plan By										
Architect/Specialist	DATE	REVISION	BY	APP'D						

Fri Jul 15 12:00:39 2011

Washington State Department of Transportation

STANDARD PRESTRESSED CONCRETE GIRDERS

RAISED CROSSBEAM PRESTRESSED GIRDER CONSTRUCTION SEQUENCE

BRIDGE SHEET NO.

SHEET OF SHEETS

Last revised on : 05/03/2011

SR FILE NO. SHEET

5.6-A2-3

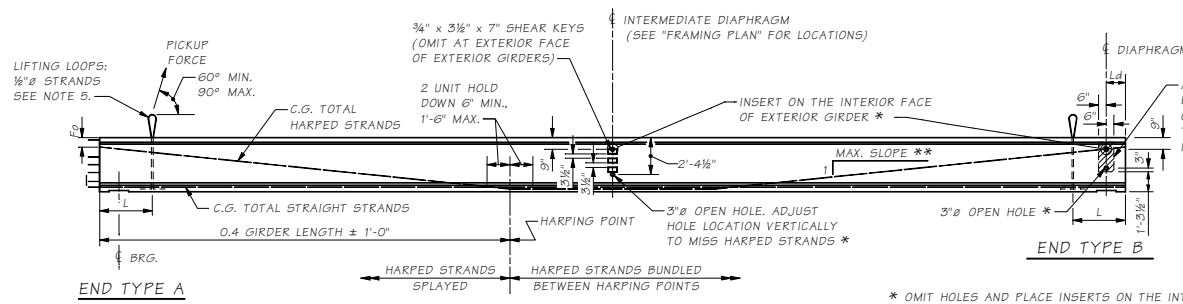

GIRDER ELEVATION

* OMIT HOLES AND PLACE INSERTS ON THE INTERIOR FACE OF EXTERIOR GIRDERS. PLACE HOLES AND INSERTS PARALLEL TO SKEW. INSERTS SHALL BE 1"ø BURKE HI-TENSILE, LANCASTER MALLEABLE, DAYTON-SUPERIOR F-62 FLARED THIN SLAB (1" x 4⅜") FERRULE OR APPROVED EQUAL. (TYP.)

** MAXIMUM SLOPE FOR STRANDS
6 : 1 FOR EACH ½"ø STRAND OR
8 : 1 FOR EACH 0.6"ø STRAND

NOTES

1. PLAN LENGTH SHALL BE INCREASED AS NECESSARY TO COMPENSATE FOR SHORTENING DUE TO PRESTRESS AND SHRINKAGE.
2. ALL PRETENSIONED STRANDS SHALL BE [½"ø OR 0.6"ø] LOW RELAXATION STRANDS (AASHTO M203 GRADE 270.)
3. FOR END TYPES A, C AND D, CUT ALL STRANDS FLUSH WITH THE GIRDER ENDS AND PAINT WITH AN APPROVED EPOXY RESIN, EXCEPT FOR EXTENDED STRANDS AS SHOWN. FOR END TYPE B CUT ALL STRANDS 1" BELOW CONCRETE SURFACE AND GROUT WITH AN APPROVED EPOXY GROUT.
4. THE TOP SURFACE OF THE GIRDER FLANGE SHALL BE ROUGHENED IN ACCORDANCE WITH SECTION 6-02.3(25)H OF THE STANDARD SPECIFICATIONS.
5. LIFTING EMBEDMENTS SHALL BE INSTALLED IN ACCORDANCE WITH SECTION 6-02.3(25)L OF THE STANDARD SPECIFICATIONS.
6. CAUTION SHALL BE EXERCISED IN HANDLING AND PLACING GIRDERS. ALL GIRDERS SHALL BE CHECKED BY THE CONTRACTOR TO ENSURE THAT THEY ARE BRACED ADEQUATELY TO PREVENT TIPPING AND TO CONTROL LATERAL BENDING DURING SHIPPING. ONCE ERECTED, ALL GIRDERS SHALL BE BRACED LATERALLY TO PREVENT TIPPING UNTIL THE DIAPHRAGMS ARE CAST AND CURED.
7. FORMS FOR BEARING PAD RECESSES SHALL BE CONSTRUCTED AND FASTENED IN SUCH A MANNER AS TO NOT CAUSE DAMAGE TO THE GIRDER DURING THE STRAND RELEASE OPERATION.

INTERMEDIATE DIAPHRAGM:
1/2 point of span for span lengths 40'-0" to 80'-0".
No intermediate diaphragm for span lengths 40'-0" or less.

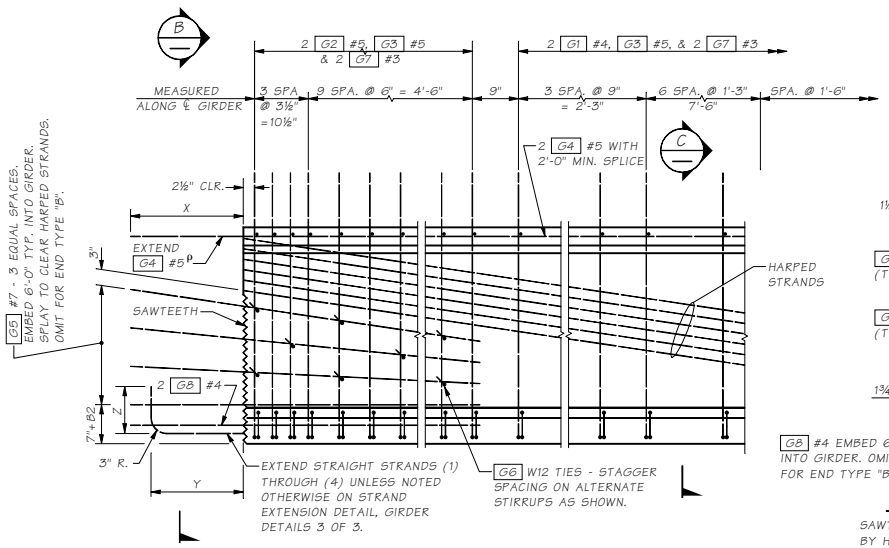

TYPICAL END ELEVATION

END TYPE C SHOWN, OTHER END TYPES SIMILAR.

ρ FIELD BENDING REQUIRED TO OBTAIN 1½" CONCRETE COVER AT PAVEMENT SEAT.

(stirrup spacing shall be determined by the designer)

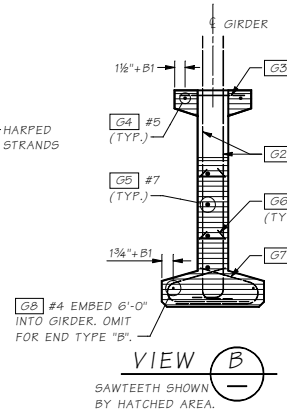

VIEW B

SAWTEETH SHOWN BY HATCHED AREA.

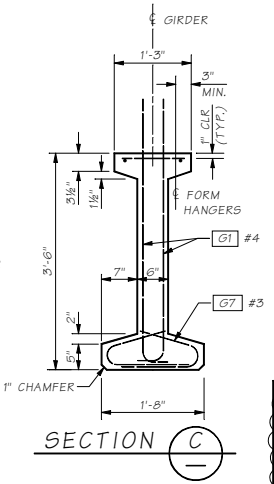

SECTION C

Diaphragm Type	END TYPE	BEARING RECESS	X	Y	Z	SAWTEETH
End Diaph. on Girder	A	YES	1'-10"	1'-6"	9"	YES
"L" Abutment	B	YES	0"	0"	0"	NO
Hinge Diaph. @ Intermediate Pier	C	NO	1'-10"	1'-6"	9"	YES
Fixed Diaph. @ Intermediate Pier	D	NO	1'-10"	ALT. 1 OR ALT. 2 STRAND EXTENSION		YES

FOR END TYPE "C"

ENDS AHEAD ON STATION
G5 BARS LEFT OF ℄
B1 = 0" (G4 , G8)
B2 = 0" (G5)
ENDS BACK ON STATION
G5 BARS RIGHT OF ℄
B1 = 1½"(G4 , G8)
B2 = 3" (G5)

MARK	LOCATION	SIZE	
G1	GIRDER STIRRUPS	4	
G2	GIRDER END STIRRUPS	5	
G3	GIRDER TOP FLANGE	5	STR.
G4	GIRDER LONGIT. FULL LENGTH	5	STR.
G5	GIRDER END LONGIT.	7	STR.
G6	GIRDER END TIES	W12 δ	
G7β	GIRDER BOT. FLANGE TIES	3	
G8	GIRDER END LONGIT.	4	STR.
G9β	GIRDER BOT. FLANGE TIES	3	
G10β	GIRDER BOT. FLANGE TIES	3	

BENDING DIAGRAM (ALL DIMENSIONS ARE OUT TO OUT)
NOTE: FOR DIMENSION "A", SEE "GIRDER SCHEDULE"

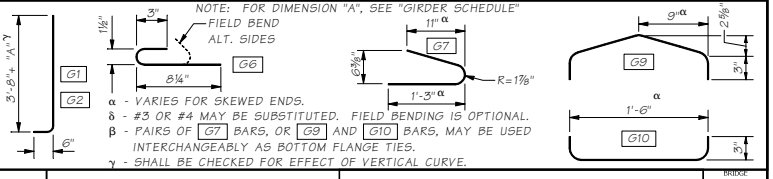

α - VARIES FOR SKEWED ENDS.
δ - #3 OR #4 MAY BE SUBSTITUTED. FIELD BENDING IS OPTIONAL.
β - PAIRS OF G7 BARS, OR G9 AND G10 BARS, MAY BE USED INTERCHANGEABLY AS BOTTOM FLANGE TIES.
γ - SHALL BE CHECKED FOR EFFECT OF VERTICAL CURVE.

Bridge Design Engr.	M:\STANDARDS\Girders\W\W42G\W42G1.man								
Supervisor									
Designed By									
Checked By									
Detailed By									
Bridge Projects Engr.									
Prelim. Plan By									
Architect/Specialist	DATE	REVISION		BY	APP'D				

REGION NO.	STATE	FED. AID PROJ. NO.	SHEET NO.	TOTAL SHEETS
10	WASH.			
JOB NUMBER				

BRIDGE AND STRUCTURES OFFICE

Washington State Department of Transportation

STANDARD PRESTRESSED CONCRETE GIRDERS

W42G GIRDER DETAILS 1 OF 2

BRIDGE SHEET NO. — SHEET — OF — SHEETS

JOB NO. — SHEET — SR

5.6-A3-1

Fri Sep 10 07:45:43 2010

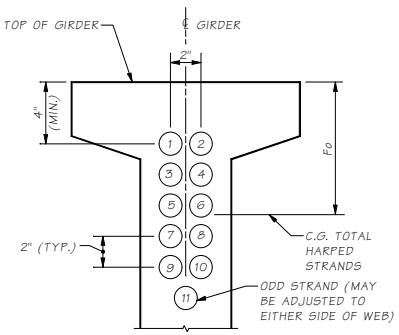

STRAND PATTERN AT GIRDER END

HARPED STRAND LOCATION SEQUENCE SHALL BE AS SHOWN (1), (2) ETC.

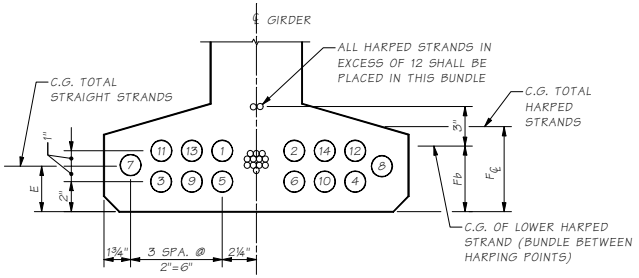

STRAND PATTERN AT ℄ SPAN

STRAIGHT STRAND LOCATION SEQUENCE SHALL BE AS SHOWN (1), (2) ETC.

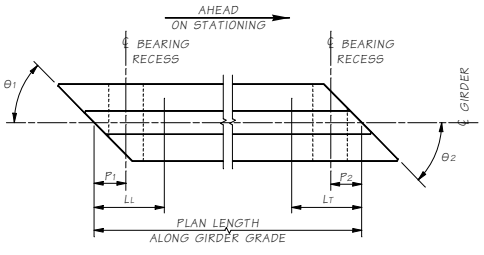

NOTE:
L1 AND LT ARE SHIPPING SUPPORT LOCATIONS AT LEADING AND TRAILING ENDS, RESPECTIVELY.

GIRDER SCHEDULE

DIMENSION "A" AT ℄ BEARINGS = BASED ON GIRDER DEFLECTION = "D" AT TIME OF SLAB PLACEMENT (120 DAYS)

SPAN	GIRDER	END 1 TYPE	END 2 TYPE	L	L1	LT	θ1 (DEG.)	θ2 (DEG.)	P1	P2	PLAN LENGTH (ALONG GIRDER GRADE)	MIN. CONC. COMP. STRENGTH @ FINAL F'C (KSI)	MIN. CONC. COMP. STRENGTH @ RELEASE F'CI (KSI)	HARPED NO. OF STRANDS	HARPED JACKING FORCE (KIPS)	STRAIGHT NO. OF STRANDS	STRAIGHT JACKING FORCE (KIPS)	LOCATION OF C.G. STRANDS E	LOCATION OF C.G. STRANDS F℄	LOCATION OF C.G. STRANDS Fb	LOCATION OF C.G. STRANDS Fo	C	D @ 40 DAYS	D @ 120 DAYS	Ld
-	-	-	-	-	-	-	-	-	-	-	-	-	-	-	-	-	-	-	-	-	-	-	-	-	-
-	-	-	-	-	-	-	-	-	-	-	-	-	-	-	-	-	-	-	-	-	-	-	-	-	-

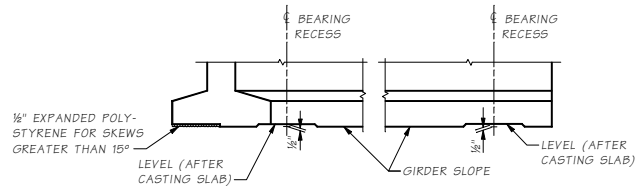

ELEVATION

NOTE:
Dimensions shall be shown in Imperial units to the nearest 1/8th inch.

The number of harped strands should not exceed ½ of the number of straight strands.

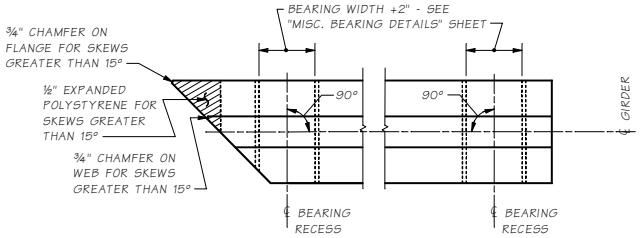

PLAN
BEARING RECESS AND BOTTOM FLANGE SPALL PROTECTION

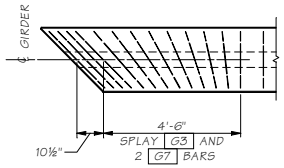

TRANSVERSE REINFORCING SKEWED ENDS

ONLY TRANSVERSE REINF. SHOWN

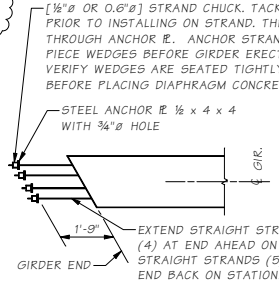

ALTERNATE #1

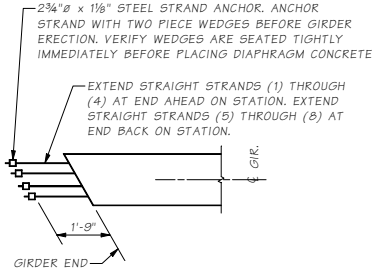

ALTERNATE #2

STRAND EXTENSION DETAIL

Number of extended strands shall be determined by the designer.

SAWTOOTH DETAILS

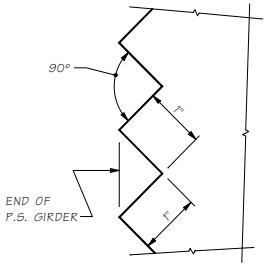

SAWTEETH ARE FULL WIDTH - USE SAWTOOTH KEYS FROM BOTTOM OF BOTTOM FLANGE TO BOTTOM OF LOWEST HARPED STRAND AS WELL AS TOP FLANGE ADJACENT TO HARPED STRANDS AS SHOWN IN VIEW B - GIRDER DETAILS 1 OF 2.

Bridge Design Engr.	M:\STANDARDS\Girders\W\W42G\W42G2.man			REGION NO.	STATE	FED. AID PROJ. NO.	SHEET NO.	TOTAL SHEETS
Supervisor				10	WASH.			
Designed By				JOB NUMBER				
Checked By								
Detailed By								
Bridge Projects Engr.								
Prelim. Plan By								
Architect/Specialist	DATE	REVISION	BY	APP'D				

BRIDGE AND STRUCTURES OFFICE

Washington State Department of Transportation

STANDARD PRESTRESSED CONCRETE GIRDERS

W42G GIRDER DETAILS 2 OF 2

BRIDGE SHEET NO. SHEET OF SHEETS

SR 5-6-A-3-2 JOB NO. SHEET

Fri Sep 10 07:45:43 2010

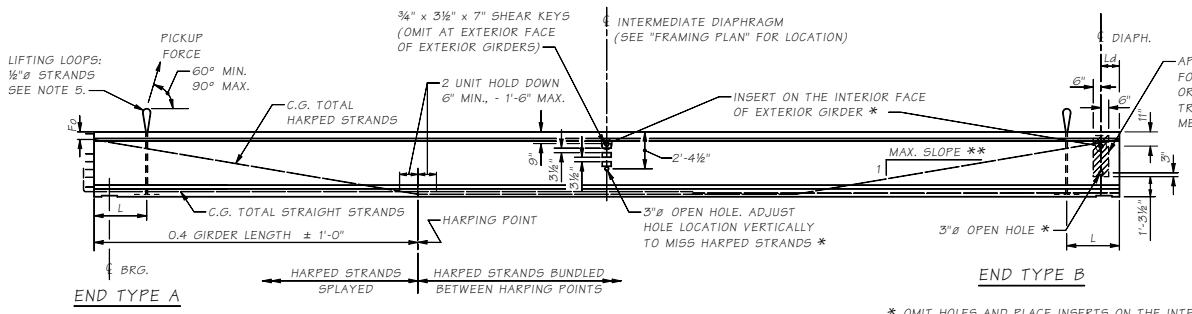

GIRDER ELEVATION

* OMIT HOLES AND PLACE INSERTS ON THE INTERIOR FACE OF EXTERIOR GIRDERS. PLACE HOLES AND INSERTS PARALLEL TO SKEW. INSERTS SHALL BE 1"ø BURKE HI-TENSILE, LANCASTER MALLEABLE, DAYTON-SUPERIOR F-62 FLARED THIN SLAB (1" x 4⅝") FERRULE OR APPROVED EQUAL. (TYP.)

** MAXIMUM SLOPE FOR STRANDS
6 : 1 FOR EACH ½"ø STRAND OR
8 : 1 FOR EACH 0.6"ø STRAND

NOTES

1. PLAN LENGTH SHALL BE INCREASED AS NECESSARY TO COMPENSATE FOR SHORTENING DUE TO PRESTRESS AND SHRINKAGE.
2. ALL PRETENSIONED STRANDS SHALL BE [½"ø OR 0.6"ø] LOW RELAXATION STRANDS (AASHTO M203 GRADE 270.)
3. FOR END TYPES A, C AND D, CUT ALL STRANDS FLUSH WITH THE GIRDER ENDS AND PAINT WITH AN APPROVED EPOXY RESIN, EXCEPT FOR EXTENDED STRANDS AS SHOWN. FOR END TYPE B CUT ALL STRANDS 1" BELOW CONCRETE SURFACE AND GROUT WITH AN APPROVED EPOXY GROUT.
4. THE TOP SURFACE OF THE GIRDER FLANGE SHALL BE ROUGHENED IN ACCORDANCE WITH SECTION 6-02.3(25)H OF THE STANDARD SPECIFICATIONS.
5. LIFTING EMBEDMENTS SHALL BE INSTALLED IN ACCORDANCE WITH SECTION 6-02.3(25)I OF THE STANDARD SPECIFICATIONS.
6. CAUTION SHALL BE EXERCISED IN HANDLING AND PLACING GIRDERS. ALL GIRDERS SHALL BE CHECKED BY THE CONTRACTOR TO ENSURE THAT THEY ARE BRACED ADEQUATELY TO PREVENT TIPPING AND TO CONTROL LATERAL BENDING DURING SHIPPING. ONCE ERECTED, ALL GIRDERS SHALL BE BRACED LATERALLY TO PREVENT TIPPING UNTIL THE DIAPHRAGMS ARE CAST AND CURED.
7. FORMS FOR BEARING PAD RECESSES SHALL BE CONSTRUCTED AND FASTENED IN SUCH A MANNER AS TO NOT CAUSE DAMAGE TO THE GIRDER DURING THE STRAND RELEASE OPERATION.

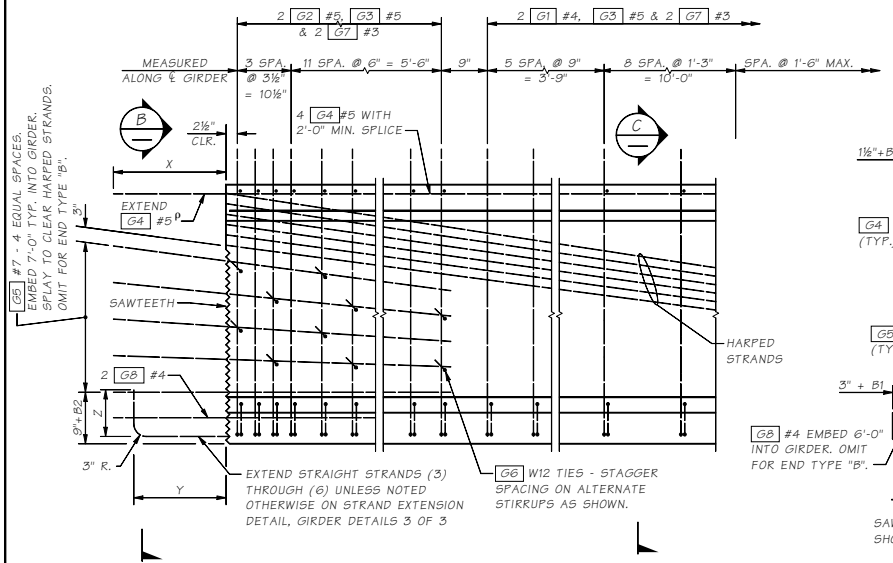

TYPICAL END ELEVATION

END OF TYPE C SHOWN, OTHER END TYPES SIMILAR

P FIELD BENDING REQUIRED TO OBTAIN 1½" CONCRETE COVER AT PAVEMENT SEAT.

(stirrup spacing shall be determined by the designer)

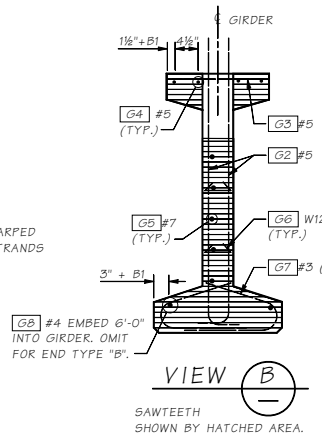

VIEW B

SAWTEETH SHOWN BY HATCHED AREA.

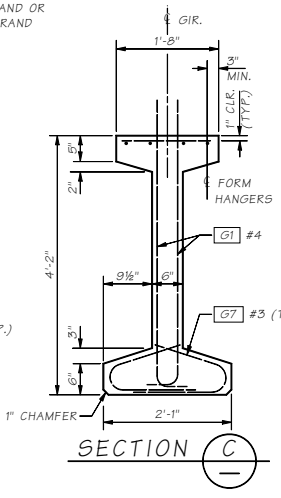

SECTION C

INTERMEDIATE DIAPHRAGM:
1/2 points of span for span lengths 40'-0" to 80'-0"
No intermediate diaphragm for span lengths 40'-0" or less.

Diaphragm Type	END TYPE	BEARING RECESS	X	Y	Z	SAWTEETH
End Diaph. on Girder	A	YES	1'-10"	1'-6"	9"	YES
"L" Abutment	B	YES	0"	0"	0"	NO
Hinge Diaph. @ Intermediate Pier	C	NO	1'-10"	1'-6"	9"	YES
Fixed Diaph. @ Intermediate Pier	D	NO	1'-10"	ALT. 1 OR ALT. 2 STRAND EXTENSION		YES

FOR END TYPE "C"

ENDS AHEAD ON STATION
G5 BARS LEFT OF ℄
B1 = 0" (G4 , G8)
B2 = 0" (G5)
ENDS BACK ON STATION
G5 BARS RIGHT OF ℄
B1 = 1½"(G4 , G8)
B2 = 3" (G5)

MARK	LOCATION	SIZE	
G1	GIRDER STIRRUPS	4	
G2	GIRDER END STIRRUPS	5	
G3	GIRDER TOP FLANGE	5	STR.
G4	GIRDER LONGIT. FULL LENGTH	5	STR.
G5	GIRDER END LONGIT.	7	STR.
G6	GIRDER END TIES	W12 δ	
G7β	GIRDER BOT. FLANGE TIES	3	
G8	GIRDER END LONGIT.	4	STR.
G9β	GIRDER BOT. FLANGE TIES	3	
G10β	GIRDER BOT. FLANGE TIES	3	

BENDING DIAGRAM (ALL DIMENSIONS ARE OUT TO OUT)
NOTE: FOR DIMENSION "A", SEE "GIRDER SCHEDULE"

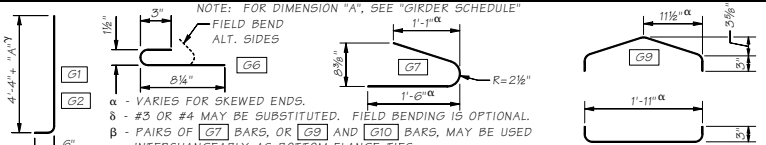

α - VARIES FOR SKEWED ENDS.
δ - #3 OR #4 MAY BE SUBSTITUTED. FIELD BENDING IS OPTIONAL.
β - PAIRS OF G7 BARS, OR G9 AND G10 BARS, MAY BE USED INTERCHANGEABLY AS BOTTOM FLANGE TIES.
γ - SHALL BE CHECKED FOR EFFECT OF VERTICAL CURVE.

Bridge Design Engr.	M:\STANDARDS\Girders\W\W50G\W50G1.MAN								
Supervisor					Region No.	STATE	FED. AID PROJ. NO.	SHEET NO.	TOTAL SHEETS
Designed By					10	WASH.			
Checked By					JOB NUMBER				
Detailed By									
Bridge Projects Engr.									
Prelim. Plan By									
Architect/Specialist	DATE	REVISION	BY	APP'D					

BRIDGE AND STRUCTURES OFFICE

Washington State Department of Transportation

STANDARD PRESTRESSED CONCRETE GIRDERS

W50G GIRDER DETAILS 1 OF 2

BRIDGE SHEET NO. — SHEET — OF — SHEETS

SR — JOB NO. — SHEET

5.6-A3-3

Thu Sep 02 14:21:29 2010

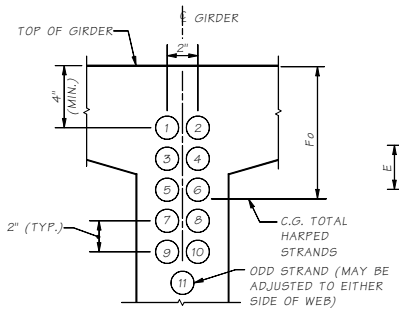

STRAND PATTERN AT GIRDER END

HARPED STRAND LOCATION SEQUENCE SHALL BE AS SHOWN (1), (2) ETC.

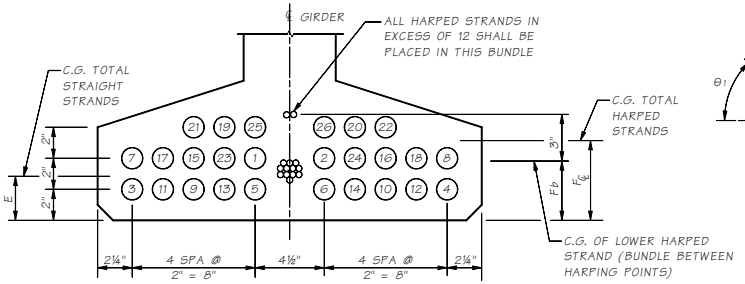

STRAND PATTERN AT ℄ SPAN

STRAIGHT STRAND LOCATION SEQUENCE SHALL BE AS SHOWN (1), (2) ETC.

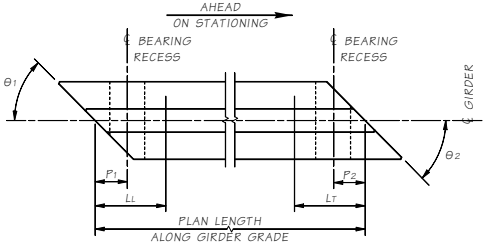

NOTE:
L1 AND LT ARE SHIPPING SUPPORT LOCATIONS AT LEADING AND TRAILING ENDS, RESPECTIVELY.

GIRDER SCHEDULE

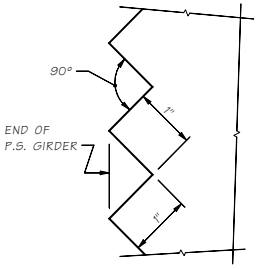

SAWTOOTH DETAILS

SAWTEETH ARE FULL WIDTH - USE SAWTOOTH KEYS FROM BOTTOM OF BOTTOM FLANGE TO BOTTOM OF LOWEST HARPED STRAND AS WELL AS TOP FLANGE ADJACENT TO HARPED STRANDS AS SHOWN IN VIEW B - GIRDER DETAILS 1 OF 2

DIMENSION "A" AT ℄ BEARINGS = — BASED ON GIRDER DEFLECTION = "D" AT TIME OF SLAB PLACEMENT (120 DAYS)

SPAN	GIRDER	END 1 TYPE	END 2 TYPE	L	L1	LT	θ1 (DEG.)	θ2 (DEG.)	P1	P2	PLAN LENGTH (ALONG GIRDER GRADE)	MIN. CONC. COMP. STRENGTH @ FINAL F'C (KSI)	MIN. CONC. COMP. STRENGTH @ RELEASE F'CI (KSI)	HARPED NO. OF STRANDS	HARPED JACKING FORCE (KIPS)	STRAIGHT NO. OF STRANDS	STRAIGHT JACKING FORCE (KIPS)	LOCATION OF C.G. STRANDS E	LOCATION OF C.G. STRANDS F℄	LOCATION OF C.G. STRANDS Fb	LOCATION OF C.G. STRANDS Fo	C	D @ 40 DAYS	D @ 120 DAYS	Δf
-	-	-	-	-	-	-	-	-	-	-	-	-	-	-	-	-	-	-	-	-	-	-	-	-	-
-	-	-	-	-	-	-	-	-	-	-	-	-	-	-	-	-	-	-	-	-	-	-	-	-	-

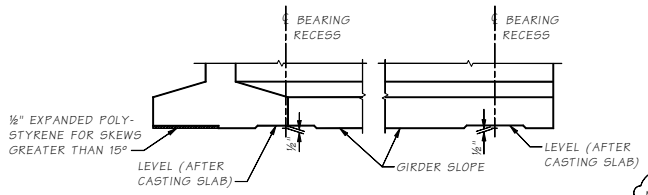

ELEVATION

NOTE:
Dimensions shall be shown in Imperial units to the nearest 1/8th inch.

The number of harped strands should not exceed ½ of the number of straight strands.

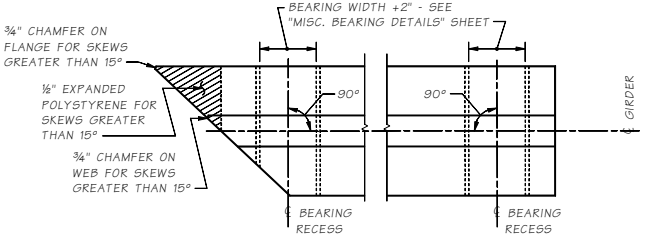

PLAN BEARING RECESS AND BOTTOM FLANGE SPALL PROTECTION

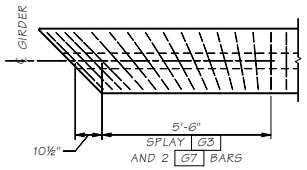

TRANSVERSE REINFORCING SKEWED ENDS

ONLY TRANSVERSE REINF. SHOWN

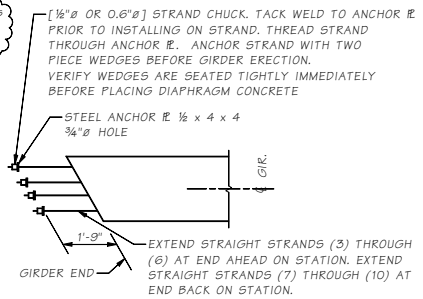

ALTERNATE #1

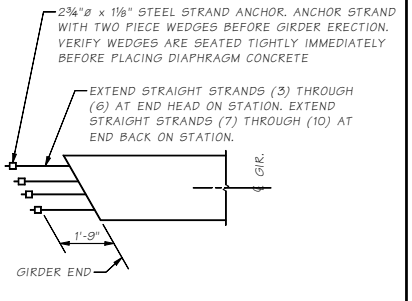

ALTERNATE #2

STRAND EXTENSION DETAIL

Number of extended strands shall be determined by the designer.

Bridge Design Engr.	M:\STANDARDS\Girders\W\W50G\W50G2.man				REGION NO.	STATE	FED. AID PROJ. NO.	SHEET NO.	TOTAL SHEETS
Supervisor					10	WASH.			
Designed By					JOB NUMBER				
Checked By									
Detailed By									
Bridge Projects Engr.									
Prelim. Plan By									
Architect/Specialist	DATE	REVISION	BY	APP'D					

BRIDGE AND STRUCTURES OFFICE

Washington State Department of Transportation

STANDARD PRESTRESSED CONCRETE GIRDERS

W50G GIRDER DETAILS 2 OF 2

BRIDGE SHEET NO. — SHEET OF SHEETS

SR — JOB NO. — SHEET

5.6-A3-4

Thu Sep 02 14:21:34 2010

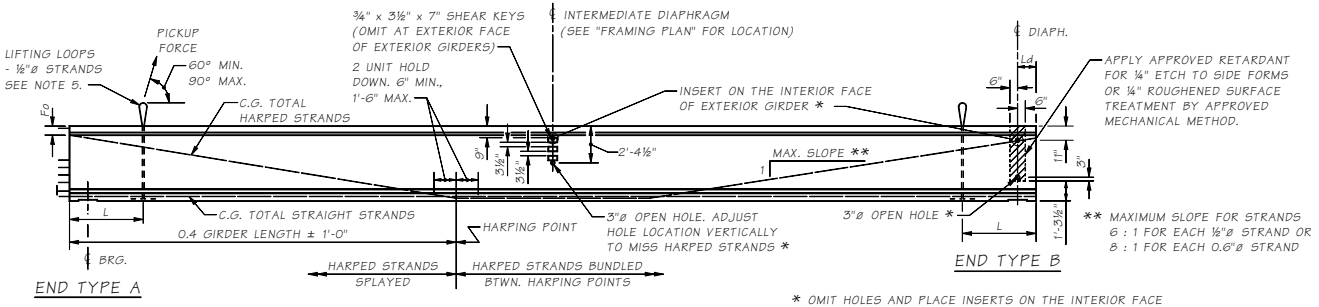

GIRDER ELEVATION

* OMIT HOLES AND PLACE INSERTS ON THE INTERIOR FACE OF EXTERIOR GIRDERS. PLACE HOLES AND INSERTS PARALLEL TO SKEW. INSERTS SHALL BE 1"ø BURKE HI-TENSILE, LANCASTER MALLEABLE, DAYTON-SUPERIOR F-62 FLARED THIN SLAB (1" x 4⅝") FERRULE OR APPROVED EQUAL. (TYP.)

NOTES

1. PLAN LENGTH SHALL BE INCREASED AS NECESSARY TO COMPENSATE FOR SHORTENING DUE TO PRESTRESS AND SHRINKAGE.
2. ALL PRETENSIONED AND TEMPORARY STRANDS SHALL BE [½"ø OR 0.6"ø] LOW RELAXATION STRANDS (AASHTO M203 GRADE 270.)
3. FOR END TYPES A, C AND D, CUT ALL STRANDS FLUSH WITH THE GIRDER ENDS AND PAINT WITH AN APPROVED EPOXY RESIN, EXCEPT FOR EXTENDED STRANDS AS SHOWN. FOR END TYPE B CUT ALL STRANDS 1" BELOW CONCRETE SURFACE AND GROUT WITH AN APPROVED EPOXY GROUT.
4. THE TOP SURFACE OF THE GIRDER FLANGE SHALL BE ROUGHENED IN ACCORDANCE WITH SECTION 6-02.3(25)H OF THE STANDARD SPECIFICATIONS.
5. LIFTING EMBEDMENTS SHALL BE INSTALLED IN ACCORDANCE WITH SECTION 6-02.3(25)L OF THE STANDARD SPECIFICATIONS.
6. CAUTION SHALL BE EXERCISED IN HANDLING AND PLACING GIRDERS. ALL GIRDERS SHALL BE CHECKED BY THE CONTRACTOR TO ENSURE THAT THEY ARE BRACED ADEQUATELY TO PREVENT TIPPING AND TO CONTROL LATERAL BENDING DURING SHIPPING. ONCE ERECTED, ALL GIRDERS SHALL BE BRACED LATERALLY TO PREVENT TIPPING UNTIL THE DIAPHRAGMS ARE CAST AND CURED.
7. FORMS FOR BEARING PAD RECESSES SHALL BE CONSTRUCTED AND FASTENED IN SUCH A MANNER AS TO NOT CAUSE DAMAGE TO THE GIRDER DURING THE STRAND RELEASE OPERATION.
8. TEMPORARY STRANDS SHALL BE EITHER PRETENSIONED OR POST-TENSIONED IN ACCORDANCE WITH SECTION 6-02.3(25)L OF THE STANDARD SPECIFICATIONS. IF PRETENSIONED, THESE TEMPORARY STRANDS SHALL BE UNBONDED OVER ALL BUT THE END 10'-0" OF THE GIRDER LENGTH. AS AN ALTERNATE, TEMPORARY STRANDS MAY BE POST-TENSIONED ON THE SAME DAY THE PRETENSIONING IS RELEASED INTO THE GIRDER.

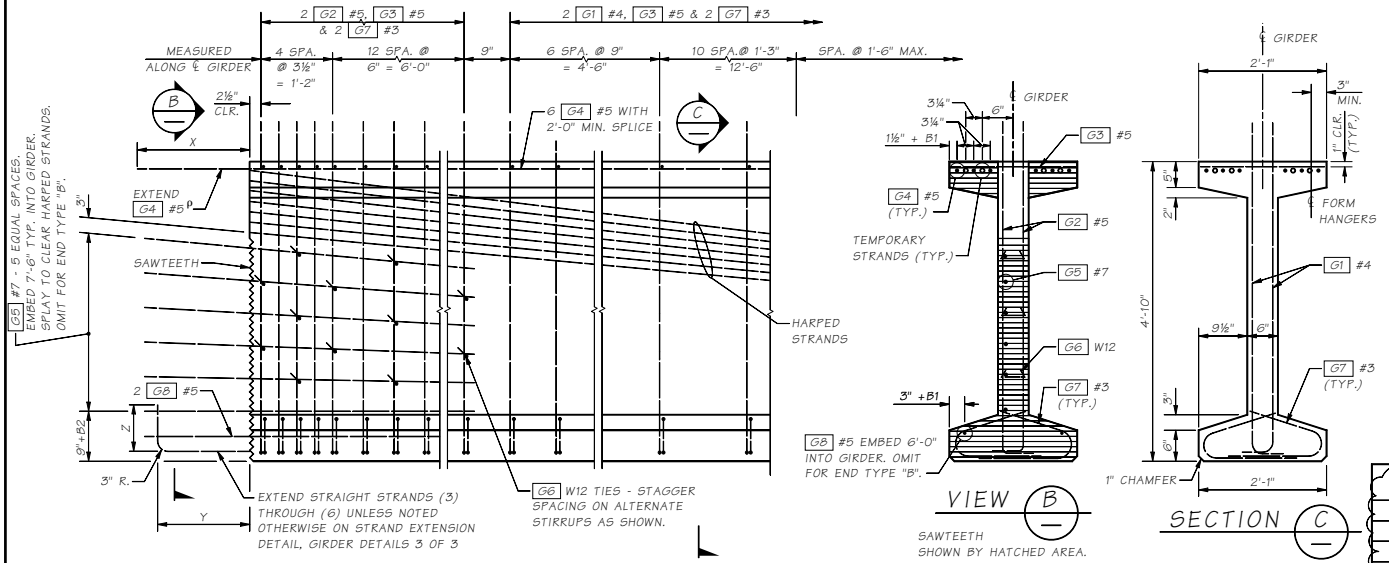

TYPICAL END ELEVATION

END TYPE C SHOWN, OTHER END TYPES SIMILAR.

ρ FIELD BENDING REQUIRED TO OBTAIN 1½" CONCRETE COVER AT PAVEMENT SEAT.

(stirrup spacing shall be determined by the designer)

VIEW B

SAWTEETH SHOWN BY HATCHED AREA.

SECTION C

INTERMEDIATE DIAPHRAGM:
1/3 points of span for span lengths 80'-0" to 120'-0"
1/2 points of span for span lengths 40'-0" to 80'-0"
No intermediate diaphragm for span lengths 40'-0" or less.

Diaphragm Type	END TYPE	BEARING RECESS	X	Y	Z	SAWTEETH
End Diaph. on Girder	A	YES	1'-10"	1'-6"	9"	YES
"L" Abutment	B	YES	0"	0"	0"	NO
Hinge Diaph. on Interm. Pier	C	NO	1'-10"	1'-6"	9"	YES
Fixed Diaph. @ Interm. Pier	D	NO	1'-10"	ALT. 1 OR ALT. 2 STRAND EXTEN.		YES

FOR END TYPE "C"

ENDS AHEAD ON STATION
G5 BARS LEFT OF ℄
B1 = 0" (G4 , G8)
B2 = 0" (G5)
ENDS BACK ON STATION
G5 BARS RIGHT OF ℄
B1 = 1½"(G4 , G8)
B2 = 3" (G5)

MARK	LOCATION	SIZE	
G1	GIRDER STIRRUPS	4	
G2	GIRDER END STIRRUPS	5	
G3	GIRDER TOP FLANGE	5	STR.
G4	GIRDER LONGIT. FULL LENGTH	5	STR.
G5	GIRDER END LONGIT.	7	STR.
G6	GIRDER END TIES	W12 δ	
G7β	GIRDER BOT. FLANGE TIES	3	
G8	GIRDER END LONGIT.	5	STR.
G9β	GIRDER BOT. FLANGE TIES	3	
G10β	GIRDER BOT. FLANGE TIES	3	

BENDING DIAGRAM (ALL DIMENSIONS ARE OUT TO OUT)
NOTE: FOR DIMENSION "A", SEE "GIRDER SCHEDULE"

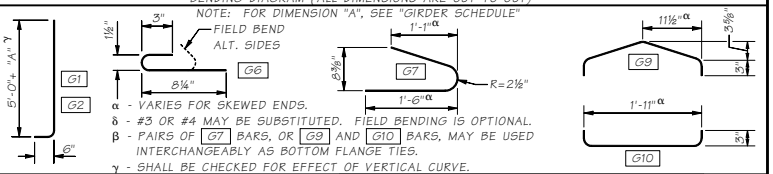

α - VARIES FOR SKEWED ENDS.
δ - #3 OR #4 MAY BE SUBSTITUTED. FIELD BENDING IS OPTIONAL.
β - PAIRS OF G7 BARS, OR G9 AND G10 BARS, MAY BE USED INTERCHANGEABLY AS BOTTOM FLANGE TIES.
γ - SHALL BE CHECKED FOR EFFECT OF VERTICAL CURVE.

Bridge Design Engr.	M:\STANDARDS\Girders\W\W58G\W58G1.man							
Supervisor								
Designed By								
Checked By								
Detailed By								
Bridge Projects Engr.								
Prelim. Plan By								
Architect/Specialist	DATE	REVISION	BY	APP'D				

REGION NO.	STATE	FED. AID PROJ. NO.	SHEET NO.	TOTAL SHEETS
10	WASH.			
JOB NUMBER				

BRIDGE AND STRUCTURES OFFICE

Washington State Department of Transportation

STANDARD PRESTRESSED CONCRETE GIRDERS

W58G GIRDER DETAILS 1 OF 3

BRIDGE SHEET NO.

SHEET OF SHEETS

SR ____ JOB NO. ____ SHEET ____

5.6-A3-5

Thu Sep 02 14:21:39 2010

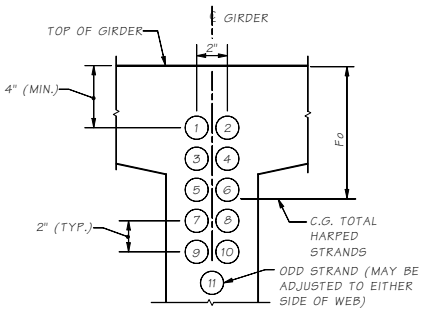

STRAND PATTERN AT GIRDER END

HARPED STRAND LOCATION SEQUENCE SHALL BE AS SHOWN (1), (2) ETC.

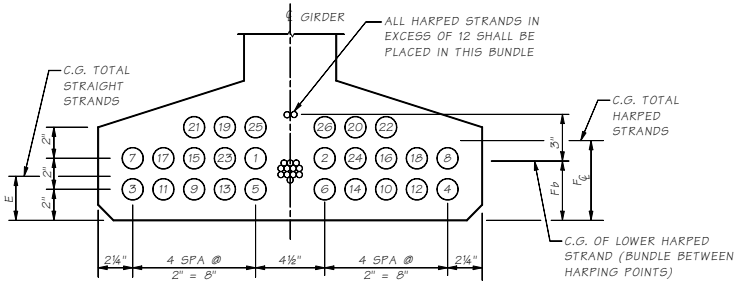

STRAND PATTERN AT ℄ SPAN

STRAIGHT STRAND LOCATION SEQUENCE SHALL BE AS SHOWN (1), (2) ETC.

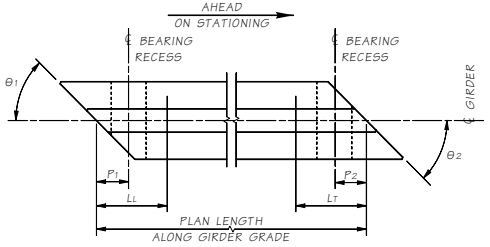

NOTE:
L1 AND LT ARE SHIPPING SUPPORT LOCATIONS AT LEADING AND TRAILING ENDS, RESPECTIVELY.

GIRDER SCHEDULE

DIMENSION "A" AT ℄ BEARINGS =												BASED ON GIRDER DEFLECTION = "D" AT TIME OF SLAB PLACEMENT (120 DAYS)															
SPAN	GIRDER	END 1 TYPE	END 2 TYPE	L	L1	LT	θ1 (DEG.)	θ2 (DEG.)	P1	P2	PLAN LENGTH (ALONG GIRDER GRADE)	MIN. CONC. COMP. STRENGTH @ FINAL F'C (KSI)	MIN. CONC. COMP. STRENGTH @ RELEASE F'CI (KSI)	HARPED NO. OF STRANDS	HARPED JACKING FORCE (KIPS)	STRAIGHT NO. OF STRANDS	STRAIGHT JACKING FORCE (KIPS)	TEMPORARY NO. OF STRANDS	TEMPORARY JACKING FORCE (KIPS)	LOCATION OF C.G. STRANDS E	LOCATION OF C.G. STRANDS F℄	LOCATION OF C.G. STRANDS Fb	LOCATION OF C.G. STRANDS Fo	C	D @ 40 DAYS	D @ 120 DAYS	f'f
-	-	-	-	-	-	-	-	-	-	-	-	-	-	-	-	-	-	-	-	-	-	-	-	-	-	-	-
-	-	-	-	-	-	-	-	-	-	-	-	-	-	-	-	-	-	-	-	-	-	-	-	-	-	-	-

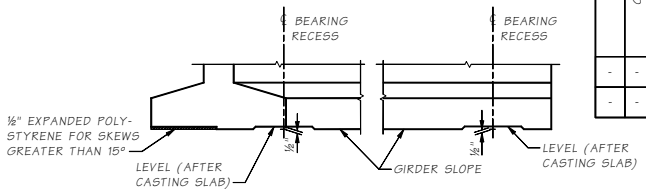

ELEVATION

NOTE:
Dimensions shall be shown in Imperial units to the nearest 1/8th inch.

The number of harped strands should not exceed ½ of the number of straight strands.

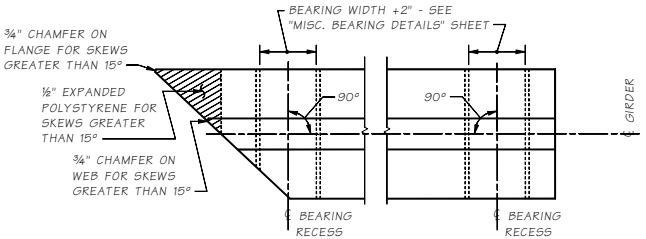

PLAN
BEARING RECESS AND BOTTOM FLANGE SPALL PROTECTION

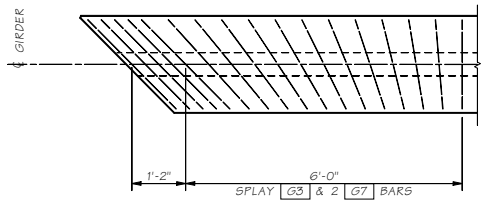

TRANSVERSE REINFORCING SKEWED ENDS

ONLY TRANSVERSE REINF. SHOWN

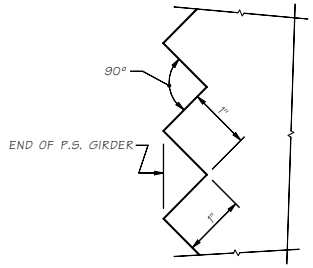

SAWTOOTH DETAILS

SAWTEETH ARE FULL WIDTH - USE SAWTOOTH KEYS FROM BOTTOM OF BOTTOM FLANGE TO BOTTOM OF LOWEST HARPED STRAND AS WELL AS TOP FLANGE ADJACENT TO HARPED STRANDS AS SHOWN IN VIEW B - GIRDER DETAILS 1 OF 3

Bridge Design Engr.	M:\STANDARDS\Girders\W\W58G\W58G2.man				REGION NO.	STATE	FED. AID PROJ. NO.	SHEET NO.	TOTAL SHEETS
Supervisor					10	WASH.			
Designed By					JOB NUMBER				
Checked By									
Detailed By									
Bridge Projects Engr.									
Prelim. Plan By									
Architect/Specialist	DATE	REVISION	BY	APP'D					

BRIDGE AND STRUCTURES OFFICE

Washington State Department of Transportation

STANDARD PRESTRESSED CONCRETE GIRDERS

W58G GIRDER DETAILS 2 OF 3

BRIDGE SHEET NO. SHEET OF SHEETS

SR JOB NO. SHEET 5.6-A3-6

Thu Sep 02 14:21:43 2010

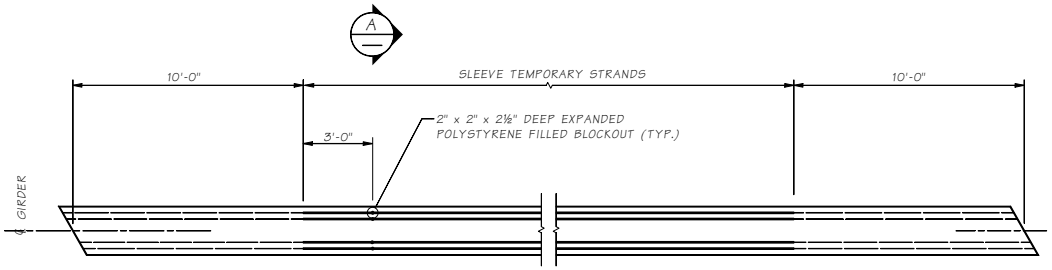

PLAN
PRETENSIONED TEMPORARY TOP STRANDS

POST-TENSIONED TEMPORARY TOP STRANDS SIMILAR, EXCEPT 10'-0" LENGTH OF BONDING OCCURS AT ONE END ONLY. THE OPPOSING END IS ANCHORED WITH PLATES AND STRAND CHUCKS. SEE "GIRDER SCHEDULE" FOR NUMBER OF TEMPORARY STRANDS REQUIRED.

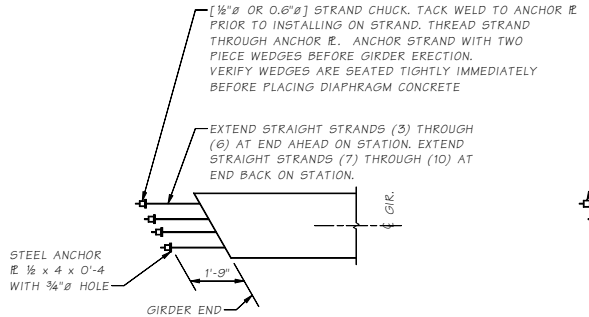

ALTERNATE #1

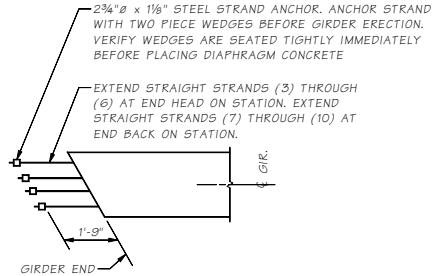

ALTERNATE #2

STRAND EXTENSION DETAIL

Number of extended strands shall be determined by the designer.

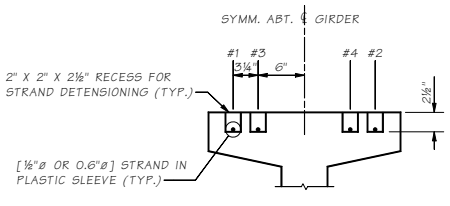

SECTION A

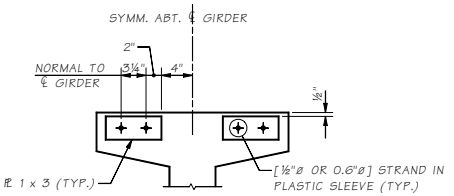

END VIEW
TEMPORARY STRAND POST-TENSIONED ALTERNATE

ADJUST G4 BARS TO CLEAR THE STEEL PLATE

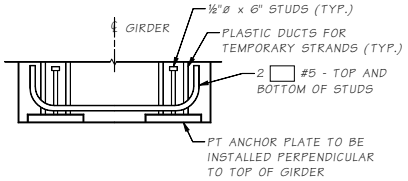

PLAN
TEMPORARY STRAND POST-TENSIONED ALTERNATE

Bridge Design Engr.	M:\STANDARDS\Girders\W\W58G\W58G3.man								
Supervisor					REGION NO.	STATE	FED. AID PROJ. NO.	SHEET NO.	TOTAL SHEETS
Designed By					10	WASH.			
Checked By					JOB NUMBER				
Detailed By									
Bridge Projects Engr.									
Prelim. Plan By									
Architect/Specialist	DATE	REVISION	BY	APPD					

BRIDGE AND STRUCTURES OFFICE

Washington State Department of Transportation

STANDARD PRESTRESSED CONCRETE GIRDERS

W58G GIRDER DETAILS 3 OF 3

BRIDGE SHEET NO.

SHEET OF SHEETS

SR JOB NO. SHEET 3

5.6-A3-7

Thu Sep 02 14:21:48 2010

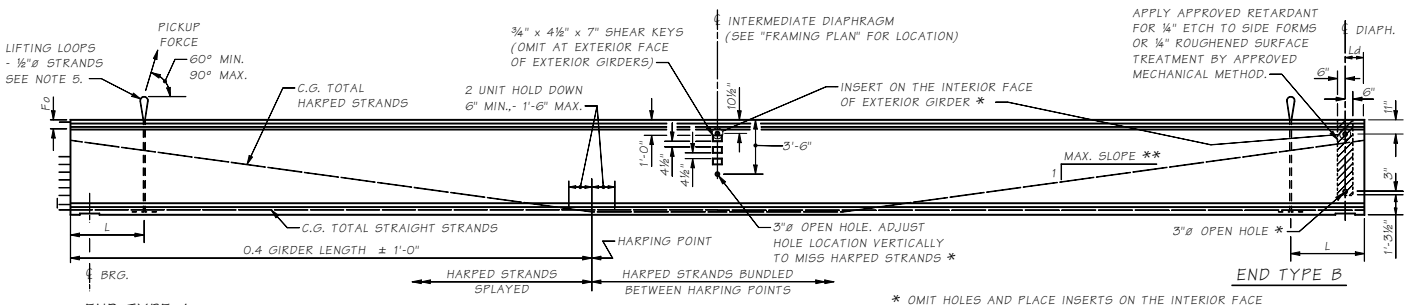

GIRDER ELEVATION

* OMIT HOLES AND PLACE INSERTS ON THE INTERIOR FACE OF EXTERIOR GIRDERS. PLACE HOLES AND INSERTS PARALLEL TO SKEW. INSERTS SHALL BE 1"ø BURKE HI-TENSILE, LANCASTER MALLEABLE, DAYTON-SUPERIOR F-62 FLARED THIN SLAB (1" x 4⅜") FERRULE OR APPROVED EQUAL. (TYP.)

** MAXIMUM SLOPE FOR STRANDS
6 : 1 FOR EACH ½"ø STRAND OR
8 : 1 FOR EACH 0.6"ø STRAND

NOTES

1. PLAN LENGTH SHALL BE INCREASED AS NECESSARY TO COMPENSATE FOR SHORTENING DUE TO PRESTRESS AND SHRINKAGE.
2. ALL PRETENSIONED AND TEMPORARY STRANDS SHALL BE [½"ø OR 0.6"ø] LOW RELAXATION STRANDS (AASHTO M203 GRADE 270.)
3. FOR END TYPES A, C AND D, CUT ALL STRANDS FLUSH WITH THE GIRDER ENDS AND PAINT WITH AN APPROVED EPOXY RESIN, EXCEPT FOR EXTENDED STRANDS AS SHOWN. FOR END TYPE B CUT ALL STRANDS 1" BELOW CONCRETE SURFACE AND GROUT WITH AN APPROVED EPOXY GROUT.
4. THE TOP SURFACE OF THE GIRDER FLANGE SHALL BE ROUGHENED IN ACCORDANCE WITH SECTION 6-02.3(25)H OF THE STANDARD SPECIFICATIONS.
5. LIFTING EMBEDMENTS SHALL BE INSTALLED IN ACCORDANCE WITH SECTION 6-02.3(25)L OF THE STANDARD SPECIFICATIONS.
6. CAUTION SHALL BE EXERCISED IN HANDLING AND PLACING GIRDERS. ALL GIRDERS SHALL BE CHECKED BY THE CONTRACTOR TO ENSURE THAT THEY ARE BRACED ADEQUATELY TO PREVENT TIPPING AND TO CONTROL LATERAL BENDING DURING SHIPPING. ONCE ERECTED, ALL GIRDERS SHALL BE BRACED LATERALLY TO PREVENT TIPPING UNTIL THE DIAPHRAGMS ARE CAST AND CURED.
7. FORMS FOR BEARING PAD RECESSES SHALL BE CONSTRUCTED AND FASTENED IN SUCH A MANNER AS TO NOT CAUSE DAMAGE TO THE GIRDER DURING THE STRAND RELEASE OPERATION.
8. TEMPORARY STRANDS SHALL BE EITHER PRETENSIONED OR POST-TENSIONED IN ACCORDANCE WITH SECTION 6-02.3(25)L OF THE STANDARD SPECIFICATIONS. IF PRETENSIONED, THESE TEMPORARY STRANDS SHALL BE UNBONDED OVER ALL BUT THE END 10'-0" OF THE GIRDER LENGTH. AS AN ALTERNATE, TEMPORARY STRANDS MAY BE POST-TENSIONED ON THE SAME DAY THE PRETENSIONING IS RELEASED INTO THE GIRDER.

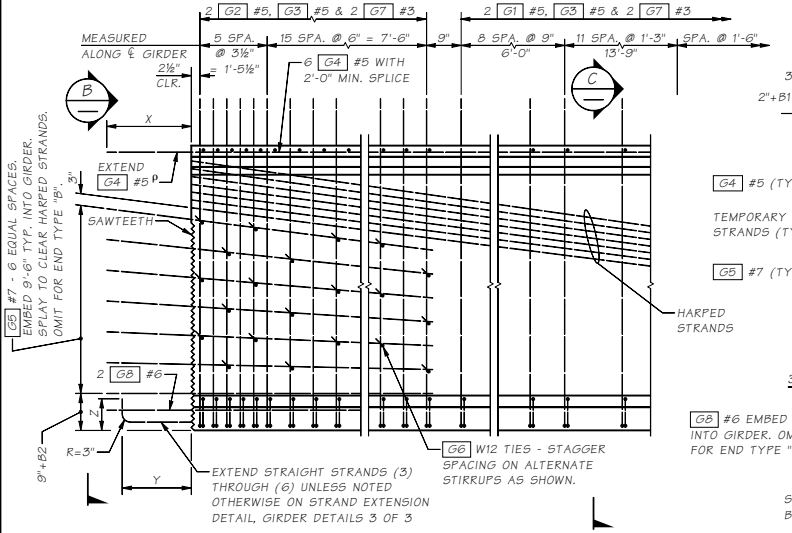

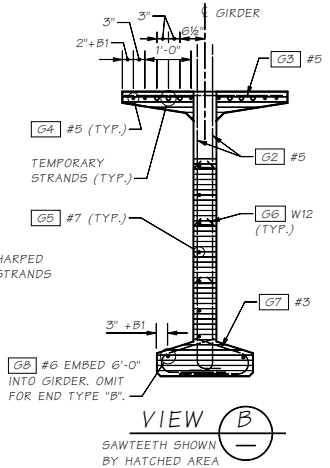

VIEW B

SAWTEETH SHOWN BY HATCHED AREA

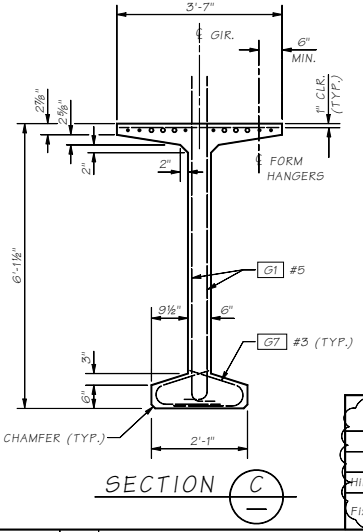

SECTION C

INTERMEDIATE DIAPHRAGM:
1/4 points of span for span lengths over 120'-0".
1/3 points of span for span lengths 80'-0" to 120'-0"
1/2 points of span for span lengths 40'-0" to 80'-0"

Diaphragm Type	END TYPE	BEARING RECESS	X	Y	Z	SAWTEETH
End Diaph. on Girder	A	YES	1'-10"	1'-6"	9"	YES
"L" Abutment	B	YES	0"	0"	0"	NO
Hinge Diaph. @ Intermediate Pier	C	NO	1'-10"	1'-6"	9"	YES
Fixed Diaph. @ Intermediate Pier	D	NO	1'-10"	ALT. 1 OR ALT. 2 STRAND EXTENSION		YES

TYPICAL END ELEVATION

END TYPE C SHOWN, OTHER END TYPES SIMILAR.

ρ FIELD BENDING REQUIRED TO OBTAIN 1½" CONCRETE COVER AT PAVEMENT SEAT.

(stirrup spacing shall be determined by the designer)

FOR END TYPE "C"

ENDS AHEAD ON STATION
G5 BARS LEFT OF ℄
B1 = 0" (G4 , G8)
B2 = 0" (G5)
ENDS BACK ON STATION
G5 BARS RIGHT OF ℄
B1 = 1½"(G4 , G8)
B2 = 3" (G5)

MARK	LOCATION	SIZE	
G1	GIRDER STIRRUPS	5	
G2	GIRDER END STIRRUPS	5	
G3	GIRDER TOP FLANGE	5	STR.
G4	GIRDER LONGIT. FULL LENGTH	5	STR.
G5	GIRDER END LONGIT.	7	STR.
G6	GIRDER END TIES	W12 δ	
G7β	GIRDER BOT. FLANGE TIES	3	
G8	GIRDER END LONGIT.	6	STR.
G9β	GIRDER BOT. FLANGE TIES	3	
G10β	GIRDER BOT. FLANGE TIES	3	

BENDING DIAGRAM (ALL DIMENSIONS ARE OUT TO OUT)
NOTE: FOR DIMENSION "A", SEE "GIRDER SCHEDULE"

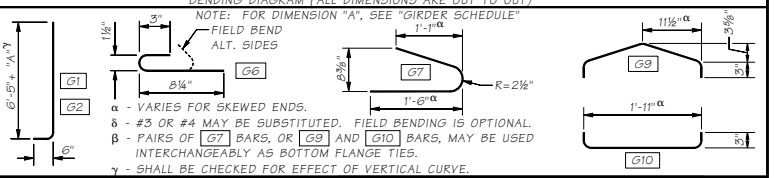

α - VARIES FOR SKEWED ENDS.
δ - #3 OR #4 MAY BE SUBSTITUTED. FIELD BENDING IS OPTIONAL.
β - PAIRS OF G7 BARS, OR G9 AND G10 BARS, MAY BE USED INTERCHANGEABLY AS BOTTOM FLANGE TIES.
γ - SHALL BE CHECKED FOR EFFECT OF VERTICAL CURVE.

Bridge Design Engr.	M:\STANDARDS\Girders\W\W74G\W74G1.man								
Supervisor					REGION NO.	STATE	FED. AID PROJ. NO.	SHEET NO.	TOTAL SHEETS
Designed By					10	WASH.			
Checked By					JOB NUMBER				
Detailed By									
Bridge Projects Engr.									
Prelim. Plan By									
Architect/Specialist	DATE	REVISION	BY	APP'D					

BRIDGE AND STRUCTURES OFFICE

Washington State Department of Transportation

STANDARD PRESTRESSED CONCRETE GIRDERS

W74G GIRDER DETAILS 1 OF 3

BRIDGE SHEET NO. | SHEET | OF | SHEETS

SR | JOB NO. | SHEET

5.6-A3-8

Thu Sep 02 14:21:50 2010

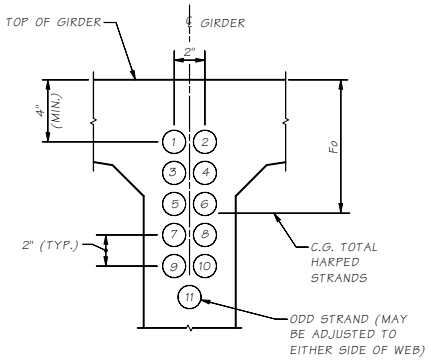

STRAND PATTERN AT GIRDER END

HARPED STRAND LOCATION SEQUENCE SHALL BE AS SHOWN (1), (2) ETC.

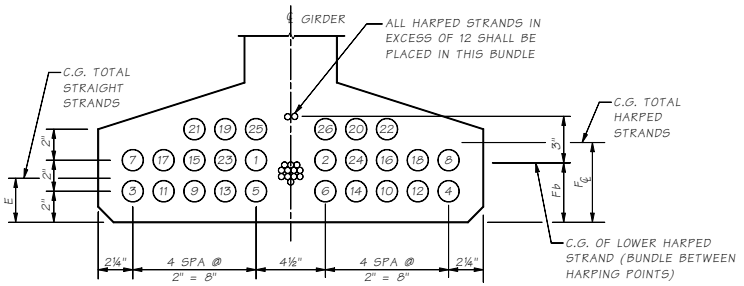

STRAND PATTERN AT ℄ SPAN

STRAIGHT STRAND LOCATION SEQUENCE SHALL BE AS SHOWN (1), (2) ETC.

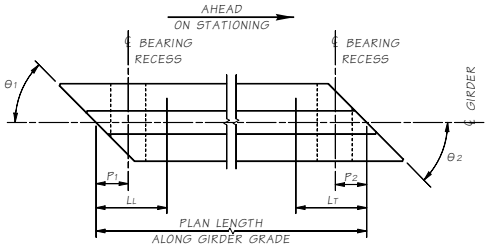

NOTE:
L1 AND LT ARE SHIPPING SUPPORT LOCATIONS AT LEADING AND TRAILING ENDS, RESPECTIVELY.

GIRDER SCHEDULE

DIMENSION "A" AT ℄ BEARINGS = BASED ON GIRDER DEFLECTION = "D" AT TIME OF SLAB PLACEMENT (120 DAYS)

SPAN	GIRDER	END 1 TYPE	END 2 TYPE	L	L1	LT	θ1 (DEG.)	θ2 (DEG.)	P1	P2	PLAN LENGTH ALONG GIRDER GRADE	MIN. CONC. COMP. STRENGTH @ FINAL F'C (KSI)	MIN. CONC. COMP. STRENGTH @ RELEASE F'CI (KSI)	HARPED NO. OF STRANDS	HARPED JACKING FORCE (KIPS)	STRAIGHT NO. OF STRANDS	STRAIGHT JACKING FORCE (KIPS)	TEMPORARY NO. OF STRANDS	TEMPORARY JACKING FORCE (KIPS)	LOCATION OF C.G. STRANDS E	LOCATION OF C.G. STRANDS F℄	LOCATION OF C.G. STRANDS Fb	LOCATION OF C.G. STRANDS Fo	C	D @ 40 DAYS	D @ 120 DAYS	L4
-	-	-	-	-	-	-	-	-	-	-	-	-	-	-	-	-	-	-	-	-	-	-	-	-	-	-	-
-	-	-	-	-	-	-	-	-	-	-	-	-	-	-	-	-	-	-	-	-	-	-	-	-	-	-	-

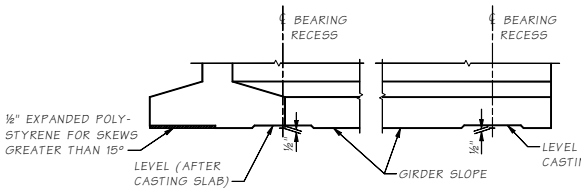

ELEVATION

NOTE:
Dimensions shall be shown in Imperial units to the nearest 1/8th inch.

The number of harped strands should not exceed ½ of the number of straight strands.

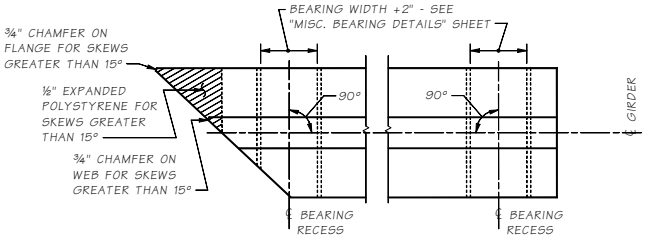

PLAN
BEARING RECESS AND BOTTOM FLANGE SPALL PROTECTION

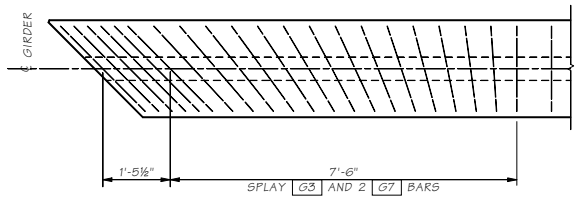

TRANSVERSE REINFORCING SKEWED ENDS

ONLY TRANSVERSE REINF. SHOWN

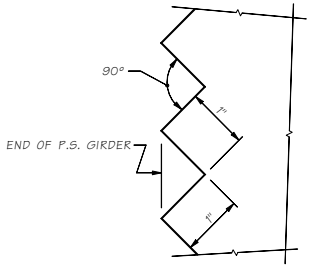

SAWTOOTH DETAILS

SAWTEETH ARE FULL WIDTH - USE SAWTOOTH KEYS FROM BOTTOM OF BOTTOM FLANGE TO BOTTOM OF LOWEST HARPED STRAND AS WELL AS TOP FLANGE ADJACENT TO HARPED STRANDS AS SHOWN IN VIEW B - GIRDER DETAILS 1 OF 3

Bridge Design Engr:	M:\STANDARDS\Girders\W\W74G\W74G2.mar									
Supervisor										
Designed By										
Checked By										
Detailed By										
Bridge Projects Engr.										
Prelim. Plan By										
Architect/Specialist	DATE	REVISION		BY	APP'D					

REGION NO.	STATE	FED. AID PROJ. NO.	SHEET NO.	TOTAL SHEETS
10	WASH.			
JOB NUMBER				

BRIDGE AND STRUCTURES OFFICE

Washington State Department of Transportation

STANDARD PRESTRESSED CONCRETE GIRDERS

W74G GIRDER DETAILS 2 OF 3

BRIDGE SHEET NO. SHEET OF SHEETS

SR JOB NO. SHEET 5.6-A3-9

Thu Sep 02 14:21:54 2010

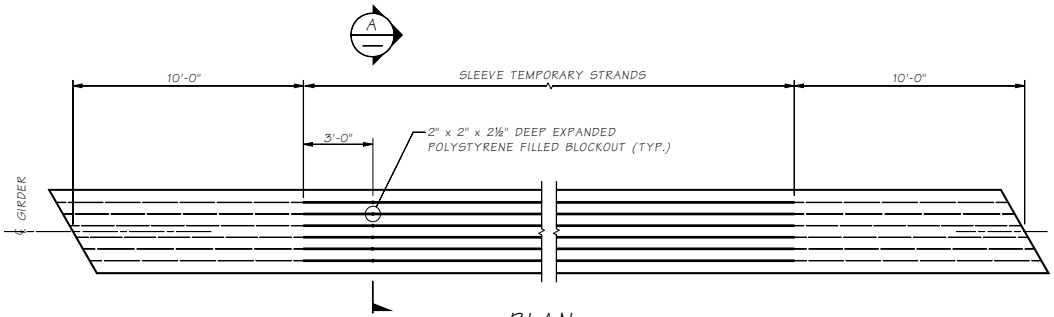

PLAN
PRETENSIONED TEMPORARY TOP STRANDS

POST-TENSIONED TEMPORARY TOP STRANDS SIMILAR, EXCEPT 10'-0" LENGTH OF BONDING OCCURS AT ONE END ONLY. THE OPPOSING END IS ANCHORED WITH PLATES AND STRAND CHUCKS. SEE "GIRDER SCHEDULE" FOR NUMBER OF TEMPORARY STRANDS REQUIRED.

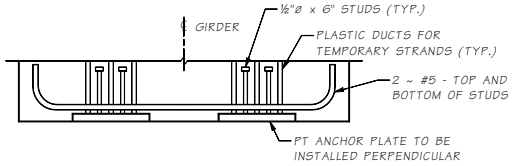

PLAN
TEMPORARY STRAND
POST-TENSIONED ALTERNATE

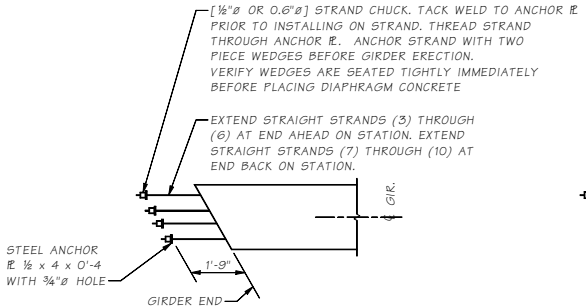

ALTERNATE #1

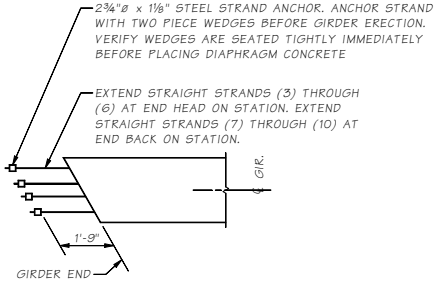

ALTERNATE #2

STRAND EXTENSION DETAIL

Number of extended strands shall be determined by the designer.

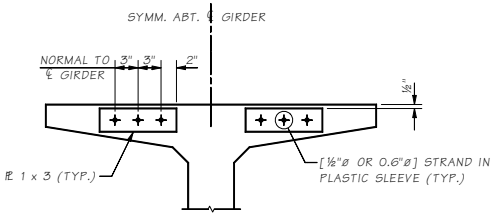

END VIEW
TEMPORARY STRAND
POST-TENSIONED ALTERNATE

ADJUST G4 BARS TO CLEAR THE STEEL PLATE

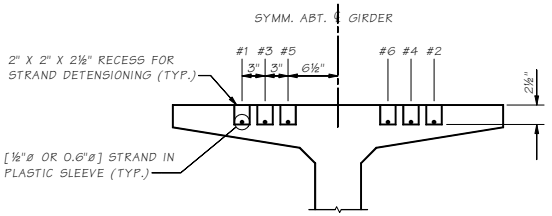

SECTION A

Bridge Design Engr.	M:\STANDARDS\Girders\W\W74G\W74G3.man								
Supervisor									
Designed By									
Checked By									
Detailed By									
Bridge Projects Engr.									
Prelim. Plan By									
Architect/Specialist	DATE	REVISION	BY	APPD					

REGION NO.	STATE	FED. AID PROJ. NO.	SHEET NO.	TOTAL SHEETS
10	WASH.			
JOB NUMBER				

BRIDGE AND STRUCTURES OFFICE

Washington State Department of Transportation

STANDARD PRESTRESSED CONCRETE GIRDERS

W74G GIRDER DETAILS 3 OF 3

BRIDGE SHEET NO. SHEET OF SHEETS

SR JOB NO. 5.6-A3-10 SHEET 3

Thu Sep 02 14:21:59 2010

GIRDER SCHEDULE

SPAN	GIRDER	GIRDER SERIES	END 1 TYPE	END 2 TYPE	"A" DIMENSION AT ℄ BEARINGS (IN)	INT. DIAPHRAGM TYPE (FULL OR PARTIAL)	L (FT-IN)	L4 (FT-IN)	LL (FT-IN)	LT (FT-IN)	θ1 (DEG.)	θ2 (DEG.)	P1 (FT-IN)	P2 (FT-IN)	PLAN LENGTH (ALONG GIRDER GRADE) (FT-IN)	MIN. CONC. COMP. STRENGTH @ 28-DAYS F'C (KSI)	MIN. CONC. COMP. STRENGTH @ RELEASE F'CI (KSI)	NUMBER OF STRAIGHT STRANDS	NUMBER OF HARPED STRANDS	NUMBER OF TEMP. STRANDS	LOCATION OF C.G. STRANDS E (IN)	LOCATION OF C.G. STRANDS F℄ (IN)	LOCATION OF C.G. STRANDS F0 (IN)	STRAIGHT STR. TO EXTEND END 1	STRAIGHT STR. TO EXTEND END 2	DECK SCREED CAMBER C (IN)	D LOWER BOUND @ 40 DAYS (IN)	D UPPER BOUND @ 120 DAYS (IN)	REINFORCEMENT DETAILS V1	V2 (IN)	V3	V4 (IN)	V5	V6 (IN)	H1 (FT-IN)
-	-	-	-	-	-	-	-	-	-	-	-	-	-	-	-	-	-	-	-	-	-	-	-	-	(?) TO (?)	(?) TO (?)	-	-	-	-	-	-	-	-	-
-	-	-	-	-	-	-	-	-	-	-	-	-	-	-	-	-	-	-	-	-	-	-	-	-	-	-	-	-	-	-	-	-	-	-	-

GIRDER NOTES

1. PLAN LENGTH SHALL BE INCREASED AS NECESSARY TO COMPENSATE FOR SHORTENING DUE TO PRESTRESS AND SHRINKAGE.
2. ALL PRETENSIONED AND TEMPORARY STRANDS SHALL BE 0.6"ø AASHTO M203 GRADE 270 LOW RELAXATION STRANDS, JACKED TO 202.5 KSI.
3. FOR END TYPES A, C AND D CUT ALL STRANDS FLUSH WITH THE GIRDER ENDS AND PAINT WITH AN APPROVED EPOXY RESIN, EXCEPT FOR EXTENDED STRANDS AS SHOWN. FOR END TYPE B CUT ALL STRANDS 1" BELOW CONCRETE SURFACE AND GROUT WITH AN APPROVED EPOXY GROUT.
4. THE TOP SURFACE OF THE GIRDER FLANGE SHALL BE ROUGHENED IN ACCORDANCE WITH SECTION 6-02.3(25)H OF THE STANDARD SPECIFICATIONS.
5. LIFTING EMBEDMENTS SHALL BE INSTALLED IN ACCORDANCE WITH SECTION 6-02.3(25)L OF THE STANDARD SPECIFICATIONS.
6. CAUTION SHALL BE EXERCISED IN HANDLING AND PLACING GIRDERS. ALL GIRDERS SHALL BE CHECKED BY THE CONTRACTOR TO ENSURE THAT THEY ARE BRACED ADEQUATELY TO PREVENT TIPPING AND TO CONTROL LATERAL BENDING DURING SHIPPING. ONCE ERECTED, ALL GIRDERS SHALL BE BRACED LATERALLY TO PREVENT TIPPING UNTIL THE DIAPHRAGMS ARE CAST AND CURED.
7. FORMS FOR BEARING PAD RECESSES SHALL BE CONSTRUCTED AND FASTENED IN SUCH A MANNER AS TO NOT CAUSE DAMAGE TO THE GIRDER DURING THE STRAND RELEASE OPERATION.
8. TEMPORARY TOP STRANDS SHALL BE EITHER PRETENSIONED OR POST-TENSIONED IN ACCORDANCE WITH SECTION 6-02.3(25)L OF THE STANDARD SPECIFICATIONS AND THE GIRDER DETAILS SHEETS. THE LIFTING LOCATION "L" AND CONCRETE RELEASE STRENGTH "F'CI" SHOWN IN THE GIRDER SCHEDULE ASSUME THAT THE TEMPORARY TOP STRANDS ARE PRETENSIONED. ALTERNATIVELY, POST-TENSIONED TEMPORARY TOP STRANDS MAY BE USED IF THE LIFTING POINTS IN THE GIRDER SCHEDULE ARE MAINTAINED AND THE STRANDS ARE STRESSED PRIOR TO LIFTING THE GIRDER FROM THE FORM.
9. FOR DIAPHRAGMS, OMIT HOLES AND PLACE INSERTS ON THE INTERIOR FACE OF EXTERIOR GIRDERS. PLACE HOLES AND INSERTS PARALLEL TO SKEW. INSERTS SHALL BE 1"ø MEADOWBURKE MX-3 HI-TENSILE, 1"ø x 5½" WILLIAMS F22 OPEN FERRULE INSERT, 1"ø x 4⅝" DAYTON-SUPERIOR F-62 FLARED THIN SLAB FERRULE INSERT OR APPROVED EQUAL.
10. DEFORMED WELDED WIRE REINFORCEMENT CONFORMING TO SECTION 9-07.7 WITH DEFORMED WIRE CONFORMING TO SECTION 9-07.8 MAY BE SUBSTITUTED FOR MILD STEEL REINFORCEMENT IF AASHTO LRFD BRIDGE DESIGN SPECIFICATION REQUIREMENTS (INCLUDING DEVELOPMENT AND ANCHORAGE) ARE MET. WELDED WIRE REINFORCEMENT SHALL HAVE THE SAME AREA AND SPACING AS THE MILD STEEL REINFORCEMENT THAT IT REPLACES AND THE YIELD STRENGTH SHALL BE GREATER THAN OR EQUAL TO 60 KSI. SHEAR STIRRUP LONGITUDINAL WIRES AND TACK WELDS SHALL BE EXCLUDED FROM GIRDER WEBS. LONGITUDINAL WIRES FOR ANCHORAGE OF WELDED WIRE REINFORCEMENT SHALL HAVE AN AREA OF 40% OR MORE OF THE AREA OF THE WIRE BEING ANCHORED BUT SHALL NOT BE LESS THAN D4.

NOTES TO DESIGNER:

1. WF GIRDER DETAIL SHEETS 1 TO 3 ARE INTENDED TO BE USED AS IS WITHOUT NEED FOR MODIFICATION FOR MOST PROJECTS. PROJECT SPECIFIC GIRDER DETAILS ARE THEN LIMITED TO THE GIRDER SCHEDULE. WF GIRDER DETAIL SHEET 3 MAY BE OMITTED IF TEMPORARY TOP STRANDS ARE NOT USED.
2. V1 SPA. @ V2 IS INTENDED TO BE THE SPLITTING RESISTANCE ZONE DEFINED BY BDM 5.6.2.F.
3. V3 SPA. @ V4 IS INTENDED TO BE THE CONFINEMENT REINFORCEMENT ZONE DEFINED BY BDM 5.6.2.G.
4. G1 AND G2 STIRRUP HEIGHT "H1" IS GENERALLY "H" + 3" + "A" DIMENSION. HOWEVER, DESIGNERS SHALL CHECK "H1" FOR THE EFFECT OF VERTICAL CURVE AND INCREASE AS NECESSARY.
5. DIMENSIONS IN THE GIRDER SCHEDULE SHALL BE SHOWN TO THE NEAREST ⅛TH INCH.
6. THE NUMBER OF HARPED STRANDS SHOULD NOT EXCEED HALF THE NUMBER OF STRAIGHT STRANDS UNLESS THE STRAIGHT STRAND PATTERN IS FULL.

Bridge Design Engr.	M:\Standards - In Progress\Girders\WF\WF SCHEDULE AND NOTES.MAN				REGION NO.	STATE	FED. AID PROJ. NO.	SHEET NO.	TOTAL SHEETS	BRIDGE AND STRUCTURES OFFICE
Supervisor					10	WASH.				Washington State Department of Transportation
Designed By					JOB NUMBER					STANDARD PRESTRESSED CONCRETE GIRDERS
Checked By										WF GIRDER GIRDER SCHEDULE
Detailed By										BRIDGE SHEET NO. / SHEET / OF / SHEETS
Bridge Projects Engr.										
Prelim. Plan By										
Architect/Specialist	DATE	REVISION	BY	APP'D						

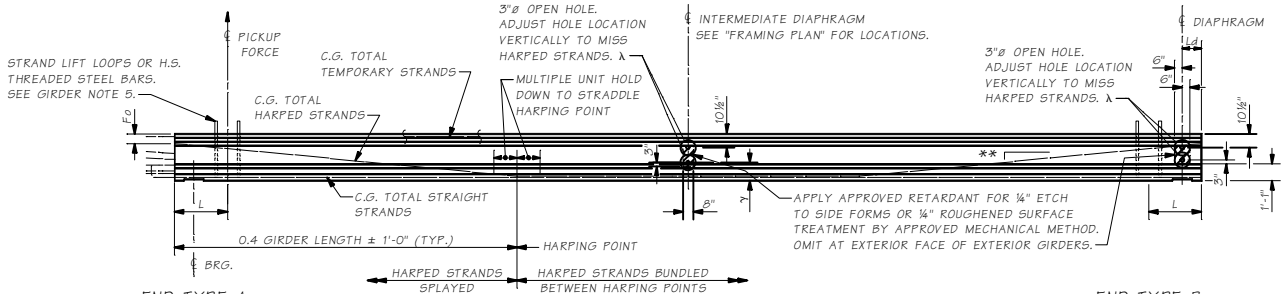

GIRDER ELEVATION

γ PARTIAL DEPTH INT. DIAPHRAGM	γ FULL DEPTH INT. DIAPHRAGM
1'-2⅛"	1'-2⅛"

** 8 : 1 MAXIMUM SLOPE FOR EACH HARPED STRAND

λ SEE GIRDER NOTE 9.

END TYPE PROPERTIES					
END TYPE	BEARING RECESS	X	Y	Z	SAWTEETH
A	YES	1'-10"ρ	1'-6"	9"	YES
B	YES	0"	0"	0"	NO
C	NO	1'-10"	1'-6"	9"	YES
D	NO	1'-10"	SEE "STRAND EXTENSION DETAIL"		YES

BAR END PLACEMENT FOR END TYPE C	
ENDS AHEAD ON STATION	ENDS BACK ON STATION
G5 BARS LEFT OF ℄	G5 BARS RIGHT OF ℄
B1 = 0" (G4 , G8)	B1 = 1½" (G4 , G8)
B2 = 0" (G5)	B2 = 3" (G5)

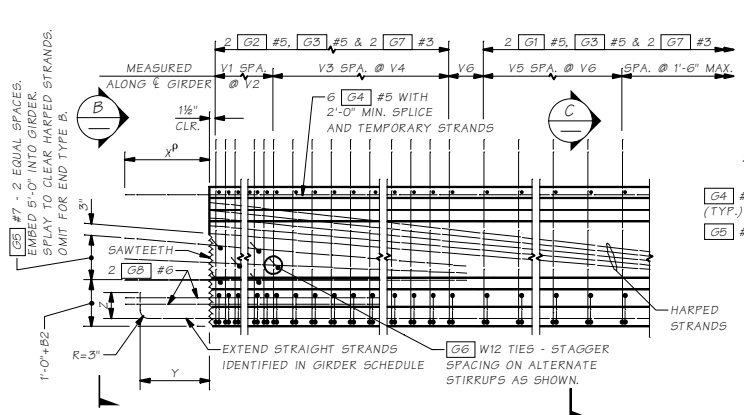

TYPICAL END ELEVATION

END TYPE C SHOWN, OTHER END TYPES SIMILAR.

ρ - X DIMENSION SHALL BE 1'-4" FOR G4 AT END TYPE A ONLY.

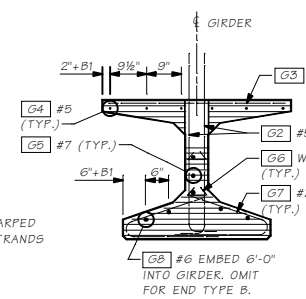

VIEW B

SAWTEETH SHOWN BY HATCHED AREA

STRANDS NOT SHOWN

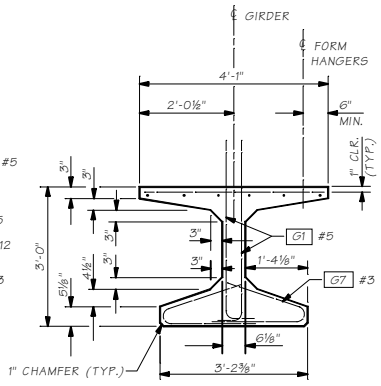

SECTION C

STRANDS NOT SHOWN

BENDING DIAGRAM (ALL DIMENSIONS ARE OUT TO OUT)

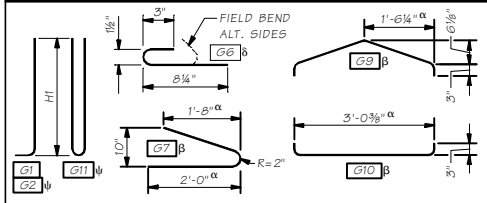

α - VARIES FOR SKEWED ENDS.
δ - #3 OR #4 MAY BE SUBSTITUTED. FIELD BENDING IS OPTIONAL.
β - PAIRS OF G7 BARS, OR G9 AND G10 BARS, MAY BE USED INTERCHANGEABLY AS BOTTOM FLANGE TIES.
ψ - 1 G11 MAY BE SUBSTITUTED FOR 2 G2 WITHIN THE V1 SPA. @ V2.

Bridge Design Engr.	M:\Standards - In Progress\Girders\WF\WF36G.MAN				REGION NO.	STATE	FED. AID PROJ. NO.	SHEET NO.	TOTAL SHEETS	BRIDGE AND STRUCTURES OFFICE
Supervisor					10	WASH				Washington State Department of Transportation
Designed By					JOB NUMBER					STANDARD PRESTRESSED CONCRETE GIRDERS
Checked By										WF36G GIRDER DETAILS 1 OF 3
Detailed By										BRIDGE SHEET NO.
Bridge Projects Engr.										SHEET OF SHEETS
Prelim. Plan By										
Architect/Specialist	DATE	REVISION	BY	APP'D						

Last revised on : 7/19/2011

SHEET NO. 5.6-A4-2

FILE NAME = SR

Wed Jul 20 10:42:08 2011

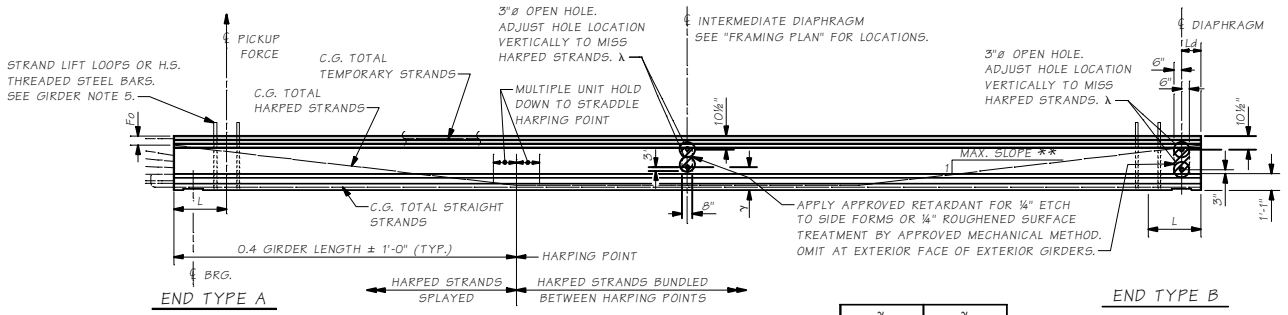

GIRDER ELEVATION

γ PARTIAL DEPTH INT. DIAPHRAGM	γ FULL DEPTH INT. DIAPHRAGM
1'-6"	1'-2⅛"

** B : 1 MAXIMUM SLOPE FOR EACH HARPED STRAND

λ SEE GIRDER NOTE 9.

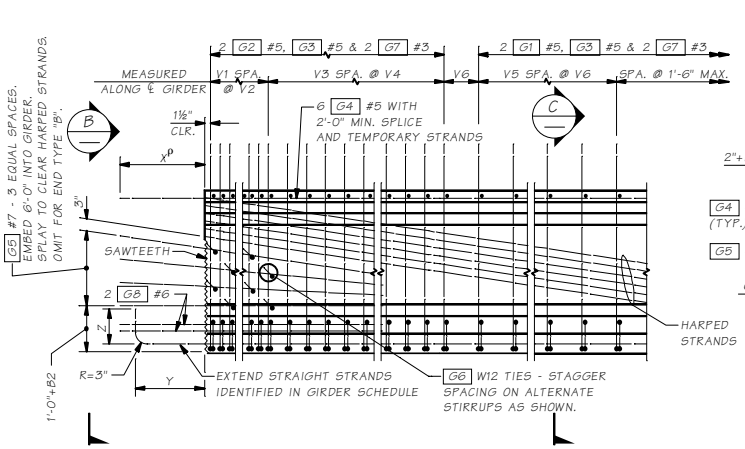

TYPICAL END ELEVATION

END TYPE C SHOWN, OTHER END TYPES SIMILAR.

ρ - X DIMENSION SHALL BE 1'-4" FOR G4 AT END TYPE A ONLY.

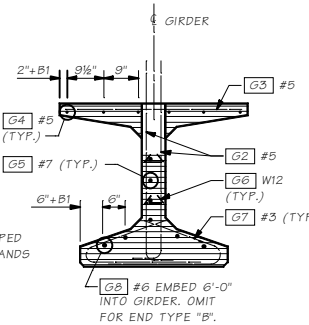

VIEW B

SAWTEETH SHOWN BY HATCHED AREA.

STRANDS NOT SHOWN.

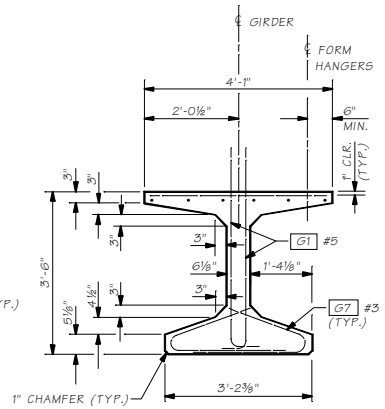

SECTION C

STRANDS NOT SHOWN.

END TYPE PROPERTIES					
END TYPE	BEARING RECESS	X	Y	Z	SAWTEETH
A	YES	1'-10"ρ	1'-6"	9"	YES
B	YES	0"	0"	0"	NO
C	NO	1'-10"	1'-6"	9"	YES
D	NO	1'-10"	SEE "STRAND EXTENSION DETAIL"		YES

BAR END PLACEMENT FOR END TYPE C	
ENDS AHEAD ON STATION	ENDS BACK ON STATION
G5 BARS LEFT OF ℄	G5 BARS RIGHT OF ℄
B1 = 0" (G4 , G8)	B1 = 1½" (G4 , G8)
B2 = 0" (G5)	B2 = 3" (G5)

BENDING DIAGRAM (ALL DIMENSIONS ARE OUT TO OUT)

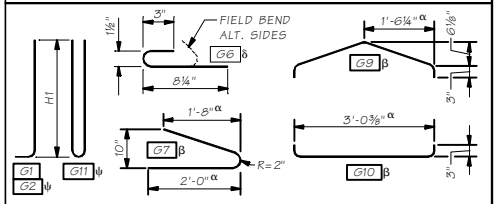

α - VARIES FOR SKEWED ENDS.
δ - #3 OR #4 MAY BE SUBSTITUTED. FIELD BENDING IS OPTIONAL.
β - PAIRS OF G7 BARS, OR G9 AND G10 BARS, MAY BE USED INTERCHANGEABLY AS BOTTOM FLANGE TIES.
ψ - 1 G11 MAY BE SUBSTITUTED FOR 2 G2 WITHIN THE V1 SPA. @ V2.

Last revised on : 7/15/2011

Bridge Design Engr.	M:\Standards - In Progress\Girders\WF\WF42G.MAN							
Supervisor				REGION NO.	STATE	FED. AID PROJ. NO.	SHEET NO.	TOTAL SHEETS
Designed By				10	WASH			
Checked By				JOB NUMBER				
Detailed By								
Bridge Projects Engr.								
Prelim. Plan By								
Architect/Specialist	DATE	REVISION	BY	APP'D				

Wed Jul 20 10:42:09 2011

BRIDGE AND STRUCTURES OFFICE

Washington State Department of Transportation

STANDARD PRESTRESSED CONCRETE GIRDERS

WF42G GIRDER DETAILS 1 OF 3

BRIDGE SHEET NO. / SHEET / OF / SHEETS

SR ____ FILE NO. ____ SHEET ____

5.6-A4-3

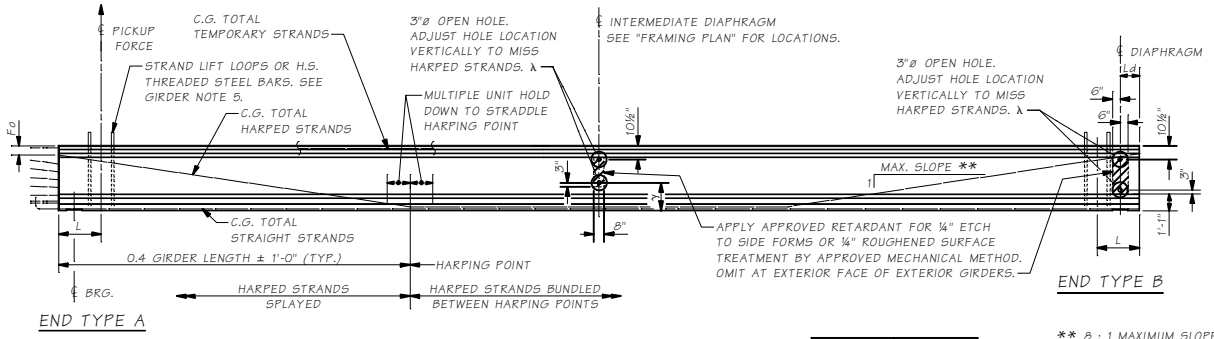

GIRDER ELEVATION

γ PARTIAL DEPTH INT. DIAPHRAGM	γ FULL DEPTH INT. DIAPHRAGM
1'-9½"	1'-2½"

** 8 : 1 MAXIMUM SLOPE FOR EACH HARPED STRAND

λ SEE GIRDER NOTE 9.

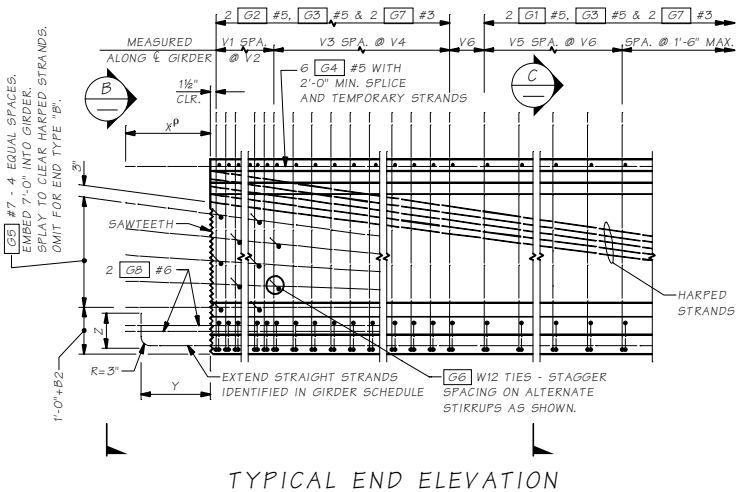

TYPICAL END ELEVATION

END TYPE C SHOWN, OTHER END TYPES SIMILAR.

ρ - X DIMENSION SHALL BE 1'-4" FOR G4 AT END TYPE A ONLY.

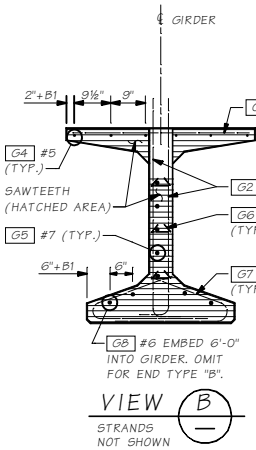

VIEW B

STRANDS NOT SHOWN

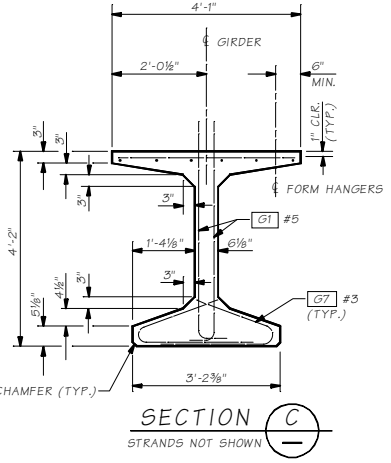

SECTION C

STRANDS NOT SHOWN

END TYPE PROPERTIES					
END TYPE	BEARING RECESS	X	Y	Z	SAWTEETH
A	YES	1'-10"ρ	1'-6"	9"	YES
B	YES	0"	0"	0"	NO
C	NO	1'-10"	1'-6"	9"	YES
D	NO	1'-10"	SEE "STRAND EXTENSION DETAIL"		YES

BAR END PLACEMENT FOR END TYPE C	
ENDS AHEAD ON STATION	ENDS BACK ON STATION
G5 BARS LEFT OF ℄	G5 BARS RIGHT OF ℄
B1 = 0" (G4 , G8)	B1 = 1½" (G4 , G8)
B2 = 0" (G5)	B2 = 3" (G5)

BENDING DIAGRAM (ALL DIMENSIONS ARE OUT TO OUT)

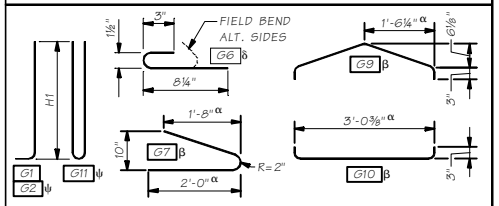

α - VARIES FOR SKEWED ENDS.
δ - #3 OR #4 MAY BE SUBSTITUTED. FIELD BENDING IS OPTIONAL.
β - PAIRS OF G7 BARS, OR G9 AND G10 BARS, MAY BE USED INTERCHANGEABLY AS BOTTOM FLANGE TIES.
ψ - 1 G11 MAY BE SUBSTITUTED FOR 2 G2 WITHIN THE V1 SPA. @ V2.

Bridge Design Engr.	M:\Standards - In Progress\Girders\WF\WF50G.MAN								
Supervisor					REGION NO.	STATE	FED. AID PROJ. NO.	SHEET NO.	TOTAL SHEETS
Designed By					10	WASH.			
Checked By					JOB NUMBER				
Detailed By									
Bridge Projects Engr.									
Prelim. Plan By									
Architect/Specialist	DATE	REVISION	BY	APPD					

Wed Jul 20 10:42:09 2011

BRIDGE AND STRUCTURES OFFICE

Washington State Department of Transportation

STANDARD PRESTRESSED CONCRETE GIRDERS

WF50G GIRDER DETAILS 1 OF 3

BRIDGE SHEET NO.

SHEET OF SHEETS

Last revised on : 7/19/2011

SHEETS ON THIS SR

5.6-A4-4

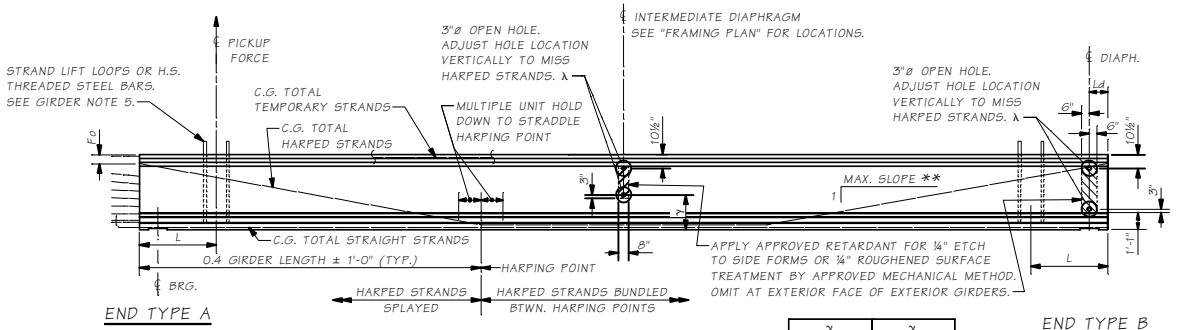

GIRDER ELEVATION

γ PARTIAL DEPTH INT. DIAPHRAGM	γ FULL DEPTH INT. DIAPHRAGM
2'-3"	1'-2⅛"

** B : 1 MAXIMUM SLOPE FOR EACH HARPED STRAND

λ SEE GIRDER NOTE 9.

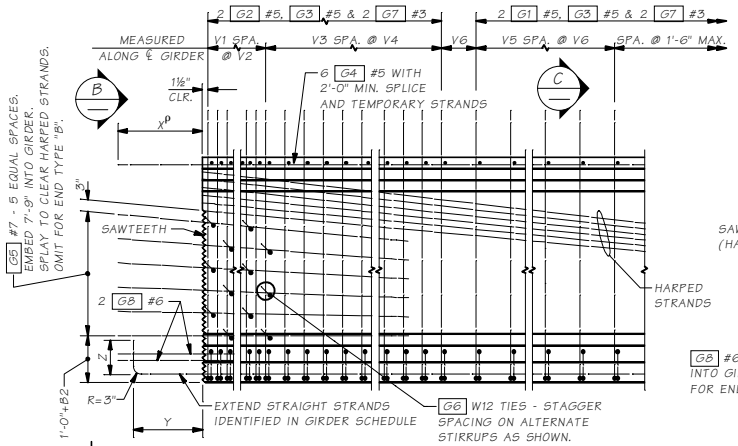

TYPICAL END ELEVATION

END TYPE C SHOWN, OTHER END TYPES SIMILAR.

ρ - X DIMENSION SHALL BE 1'-4" FOR G4 AT END TYPE A ONLY.

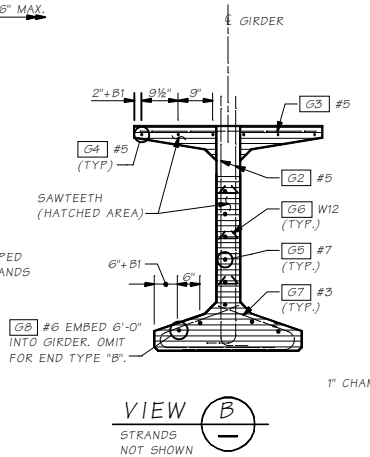

VIEW B

STRANDS NOT SHOWN

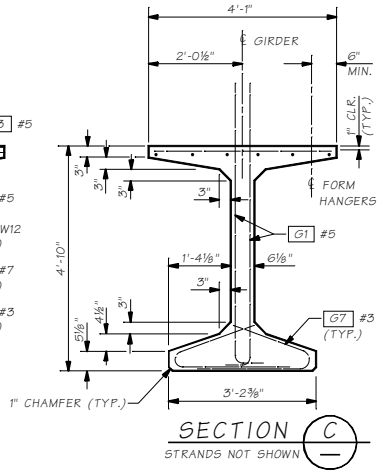

SECTION C

STRANDS NOT SHOWN

END TYPE PROPERTIES					
END TYPE	BEARING RECESS	X	Y	Z	SAWTEETH
A	YES	1'-10"ρ	1'-6"	9"	YES
B	YES	0"	0"	0"	NO
C	NO	1'-10"	1'-6"	9"	YES
D	NO	1'-10"	SEE "STRAND EXTENSION DETAIL"		YES

BAR END PLACEMENT FOR END TYPE C	
ENDS AHEAD ON STATION	ENDS BACK ON STATION
G5 BARS LEFT OF ℄	G5 BARS RIGHT OF ℄
B1 = 0" (G4 , G8)	B1 = 1½" (G4 , G8)
B2 = 0" (G5)	B2 = 3" (G5)

BENDING DIAGRAM (ALL DIMENSIONS ARE OUT TO OUT)

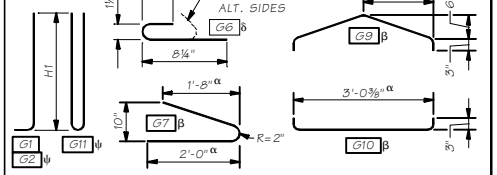

α - VARIES FOR SKEWED ENDS.
δ - #3 OR #4 MAY BE SUBSTITUTED. FIELD BENDING IS OPTIONAL.
β - PAIRS OF G7 BARS, OR G9 AND G10 BARS, MAY BE USED INTERCHANGEABLY AS BOTTOM FLANGE TIES.
ψ - 1 G11 MAY BE SUBSTITUTED FOR 2 G2 WITHIN THE V1 SPA. @ V2.

Bridge Design Engr.	M:\Standards - In Progress\Girders\WF\WF58G.MAN								
Supervisor					REGION NO.	STATE	FED. AID PROJ. NO.	SHEET NO.	TOTAL SHEETS
Designed By					10	WASH.			
Checked By					JOB NUMBER				
Detailed By									
Bridge Projects Engr.									
Prelim. Plan By									
Architect/Specialist	DATE	REVISION	BY	APP'D					

BRIDGE AND STRUCTURES OFFICE

Washington State Department of Transportation

STANDARD PRESTRESSED CONCRETE GIRDERS

WF58G GIRDER DETAILS 1 OF 3

BRIDGE SHEET NO. SHEET OF SHEETS

Last revised on : 7/19/2011

LETTERS ON THIS SHEET

5.6-A4-5

Wed Jul 20 10:42:09 2011

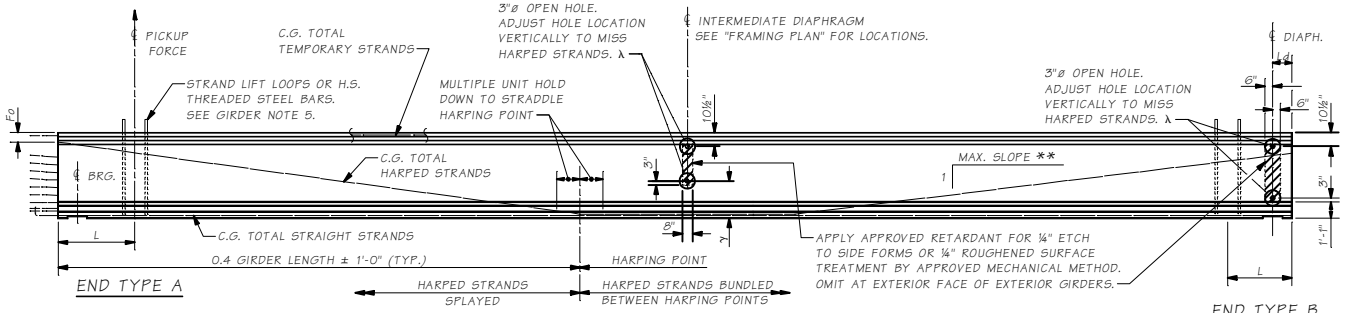

GIRDER ELEVATION

γ PARTIAL DEPTH INT. DIAPHRAGM	γ FULL DEPTH INT. DIAPHRAGM
2'-4¾"	1'-2⅛"

** 8 : 1 MAXIMUM SLOPE FOR EACH HARPED STRAND

λ SEE GIRDER NOTE 9.

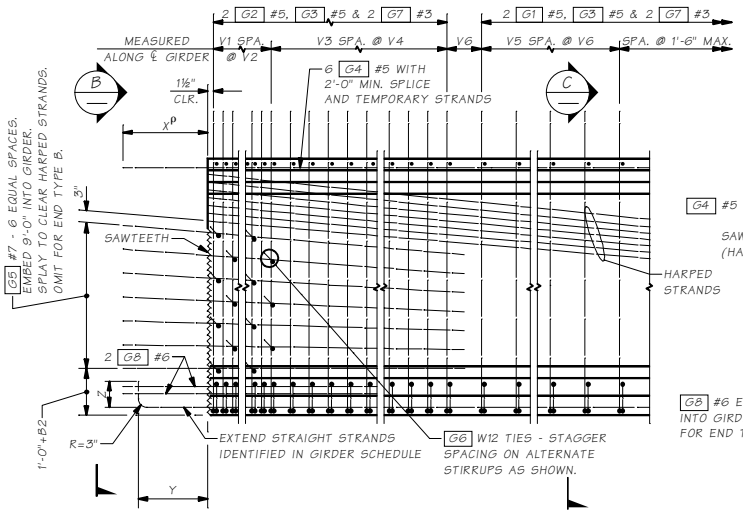

TYPICAL END ELEVATION

END TYPE C SHOWN, OTHER END TYPES SIMILAR.

ρ - X DIMENSION SHALL BE 1'-4" FOR G4 AT END TYPE A ONLY.

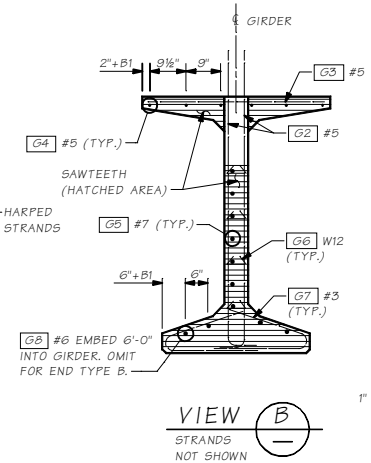

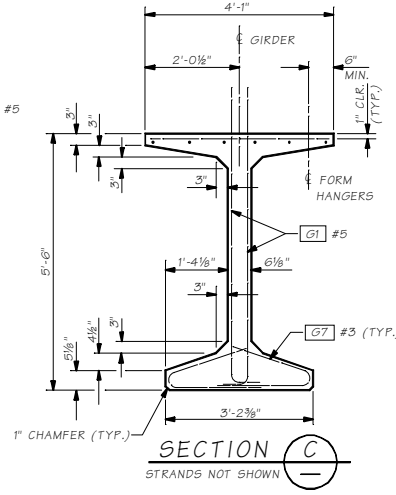

END TYPE PROPERTIES

END TYPE	BEARING RECESS	X	Y	Z	SAWTEETH
A	YES	1'-10" ρ	1'-6"	9"	YES
B	YES	0"	0"	0"	NO
C	NO	1'-10"	1'-6"	9"	YES
D	NO	1'-10"	SEE "STRAND EXTENSION DETAIL"		YES

BAR END PLACEMENT FOR END TYPE C

ENDS AHEAD ON STATION	ENDS BACK ON STATION
G5 BARS LEFT OF ℄	G5 BARS RIGHT OF ℄
B1 = 0" (G4 , G8)	B1 = 1½" (G4 , G8)
B2 = 0" (G5)	B2 = 3" (G5)

BENDING DIAGRAM (ALL DIMENSIONS ARE OUT TO OUT)

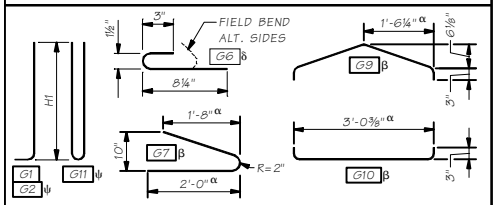

α - VARIES FOR SKEWED ENDS.
δ - #3 OR #4 MAY BE SUBSTITUTED. FIELD BENDING IS OPTIONAL.
β - PAIRS OF G7 BARS, OR G9 AND G10 BARS, MAY BE USED INTERCHANGEABLY AS BOTTOM FLANGE TIES.
ψ - 1 G11 MAY BE SUBSTITUTED FOR 2 G2 WITHIN THE V1 SPA. @ V2.

Bridge Design Engr.	M:\Standards - In Progress\Girders\WF\WF66G.MAN				REGION NO.	STATE	FED. AID PROJ. NO.	SHEET NO.	TOTAL SHEETS
Supervisor					10	WASH.			
Designed By					JOB NUMBER				
Checked By									
Detailed By									
Bridge Projects Engr.									
Prelim. Plan By									
Architect/Specialist	DATE	REVISION	BY	APP'D					

BRIDGE AND STRUCTURES OFFICE

Washington State Department of Transportation

STANDARD PRESTRESSED CONCRETE GIRDERS

WF66G GIRDER DETAILS 1 OF 3

BRIDGE SHEET NO.

SHEET OF SHEETS

Last revised on : 7/19/2011

SHEETS

SR NO. FILE

5.6-A4-6

Wed Jul 20 10:42:10 2011

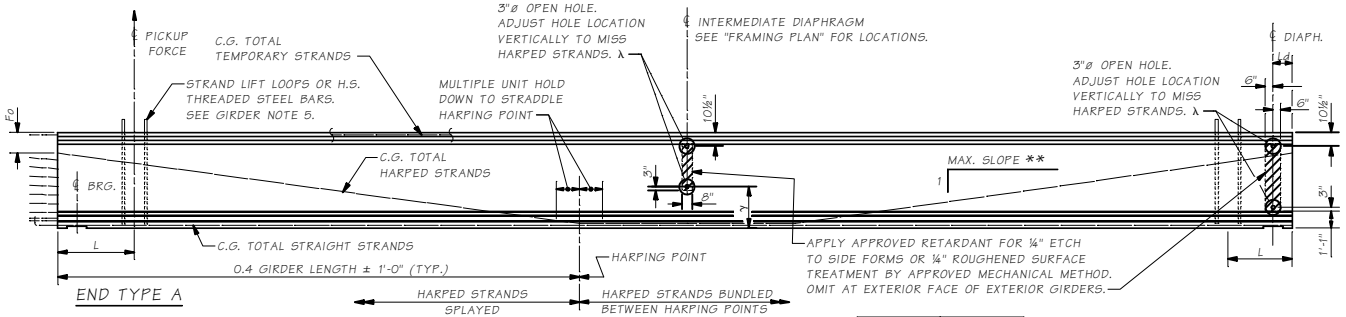

GIRDER ELEVATION

γ PARTIAL DEPTH INT. DIAPHRAGM	γ FULL DEPTH INT. DIAPHRAGM
2'-8"	1'-2⅛"

** 8 : 1 MAXIMUM SLOPE FOR EACH HARPED STRAND

λ SEE GIRDER NOTE 9.

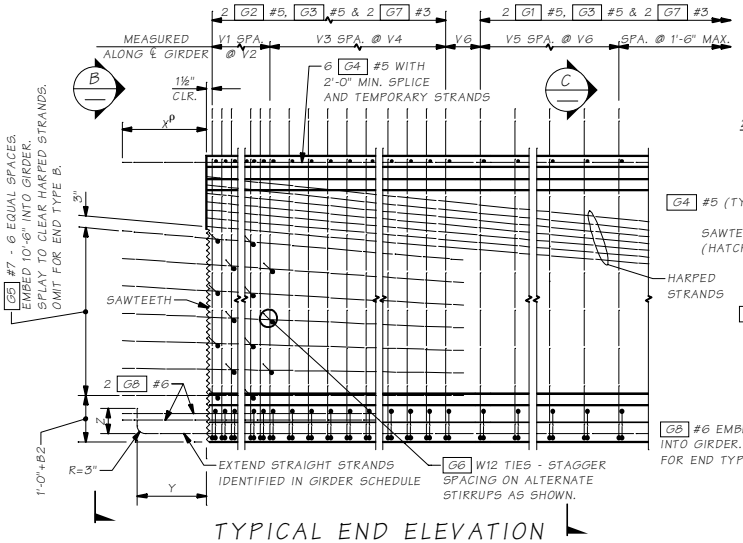

TYPICAL END ELEVATION

END TYPE C SHOWN, OTHER END TYPES SIMILAR.

ρ - X DIMENSION SHALL BE 1'-4" FOR G4 AT END TYPE A ONLY.

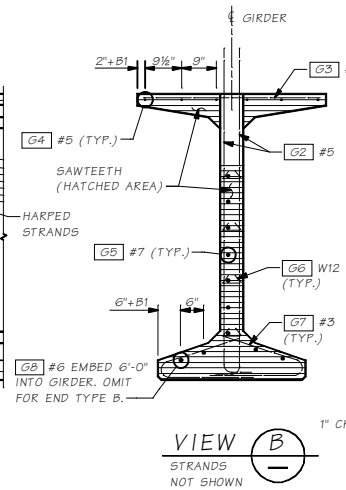

VIEW B

STRANDS NOT SHOWN

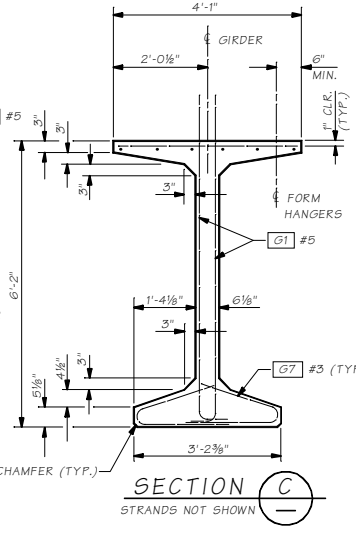

SECTION C

STRANDS NOT SHOWN

END TYPE PROPERTIES					
END TYPE	BEARING RECESS	X	Y	Z	SAWTEETH
A	YES	1'-10"ρ	1'-6"	9"	YES
B	YES	0"	0"	0"	NO
C	NO	1'-10"	1'-6"	9"	YES
D	NO	1'-10"	SEE "STRAND EXTENSION DETAIL"		YES

BAR END PLACEMENT FOR END TYPE C	
ENDS AHEAD ON STATION	ENDS BACK ON STATION
G5 BARS LEFT OF ℄	G5 BARS RIGHT OF ℄
B1 = 0" (G4 , G8)	B1 = 1½" (G4 , G8)
B2 = 0" (G5)	B2 = 3" (G5)

BENDING DIAGRAM (ALL DIMENSIONS ARE OUT TO OUT)

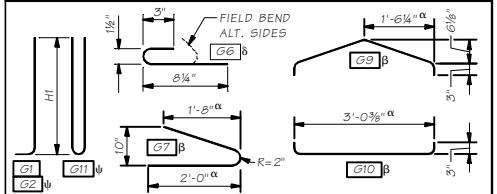

α - VARIES FOR SKEWED ENDS.
δ - #3 OR #4 MAY BE SUBSTITUTED. FIELD BENDING IS OPTIONAL.
β - PAIRS OF G7 BARS, OR G9 AND G10 BARS, MAY BE USED INTERCHANGEABLY AS BOTTOM FLANGE TIES.
ψ - 1 G11 MAY BE SUBSTITUTED FOR 2 G2 WITHIN THE V1 SPA. @ V2.

Bridge Design Engr.	M:\Standards - In Progress\Girders\WF\WF74G.MAN				REGION NO.	STATE	FED. AID PROJ. NO.	SHEET NO.	TOTAL SHEETS
Supervisor					10	WASH.			
Designed By					JOB NUMBER				
Checked By									
Detailed By									
Bridge Projects Engr.									
Prelim. Plan By									
Architect/Specialist	DATE	REVISION	BY	APP'D					

BRIDGE AND STRUCTURES OFFICE

Washington State Department of Transportation

STANDARD PRESTRESSED CONCRETE GIRDERS

WF74G GIRDER DETAILS 1 OF 3

BRIDGE SHEET NO.

SHEET OF SHEETS

Last revised on : 7/19/2011

SR ____ SHEET ____ 5.6-A4-7

Wed Jul 20 10:42:10 2011

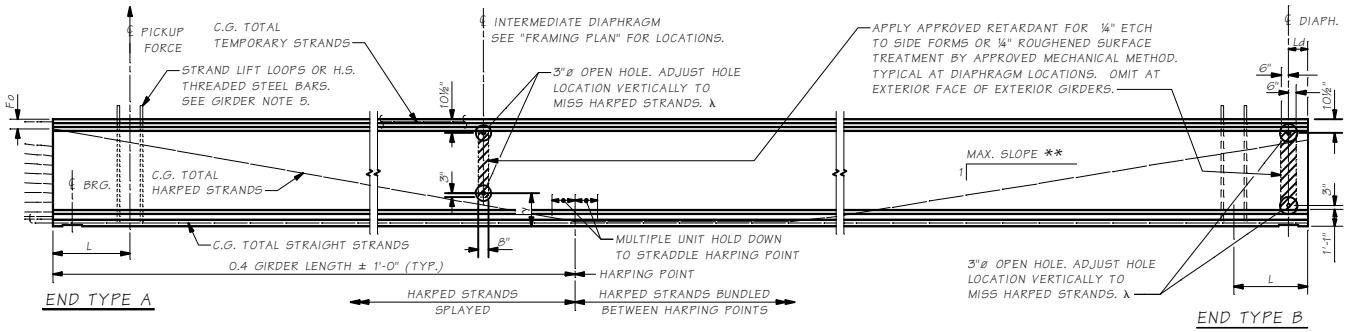

GIRDER ELEVATION

γ PARTIAL DEPTH INT. DIAPHRAGM	γ FULL DEPTH INT. DIAPHRAGM
2'-1⅝"	1'-2⅛"

** 8 : 1 MAXIMUM SLOPE FOR EACH HARPED STRAND

λ SEE GIRDER NOTE 9.

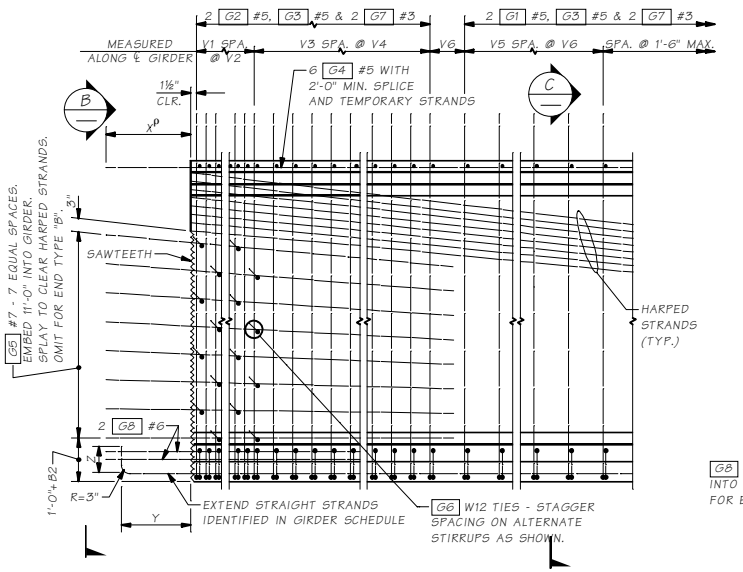

TYPICAL END ELEVATION

END TYPE C SHOWN, OTHER END TYPES SIMILAR.

ρ - X DIMENSION SHALL BE 1'-4" FOR G4 AT END TYPE A ONLY.

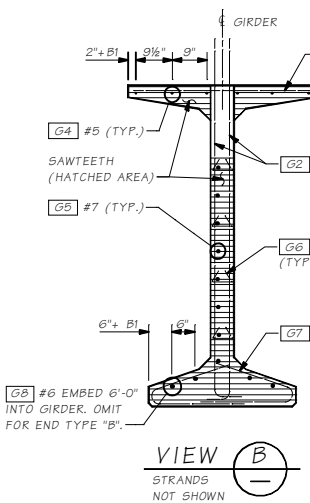

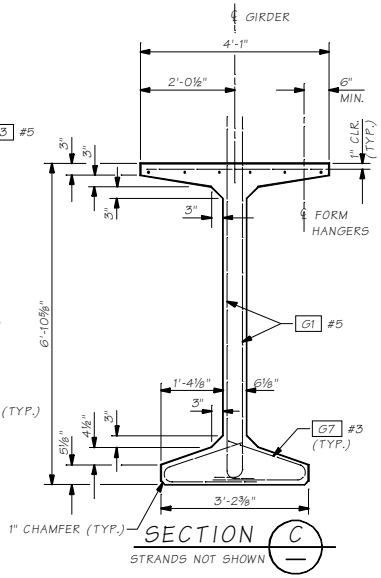

END TYPE PROPERTIES

END TYPE	BEARING RECESS	X	Y	Z	SAWTEETH
A	YES	1'-10"ρ	1'-6"	9"	YES
B	YES	0"	0"	0"	NO
C	NO	1'-10"	1'-6"	9"	YES
D	NO	1'-10"	SEE "STRAND EXTENSION DETAIL"		YES

BAR END PLACEMENT FOR END TYPE C

ENDS AHEAD ON STATION	ENDS BACK ON STATION
G5 BARS LEFT OF ℄	G5 BARS RIGHT OF ℄
B1 = 0" (G4 , G8)	B1 = 1½" (G4 , G8)
B2 = 0" (G5)	B2 = 3" (G5)

BENDING DIAGRAM (ALL DIMENSIONS ARE OUT TO OUT)

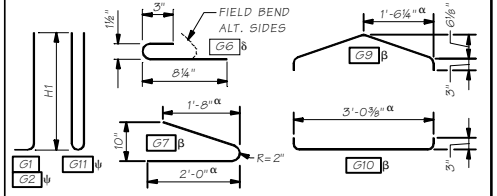

α - VARIES FOR SKEWED ENDS.
δ - #3 OR #4 MAY BE SUBSTITUTED. FIELD BENDING IS OPTIONAL.
β - PAIRS OF G7 BARS, OR G9 AND G10 BARS, MAY BE USED INTERCHANGEABLY AS BOTTOM FLANGE TIES.
ψ - 1 G11 MAY BE SUBSTITUTED FOR 2 G2 WITHIN THE V1 SPA. @ V2.

Bridge Design Engr.	M:\Standards - In Progress\Girders\WF\WF83G.MAN								
Supervisor					REGION NO.	STATE	FED. AID PROJ. NO.	SHEET NO.	TOTAL SHEETS
Designed By					10	WASH.			
Checked By									
Detailed By					JOB NUMBER				
Bridge Projects Engr.									
Prelim. Plan By									
Architect/Specialist	DATE	REVISION	BY	APP'D					

BRIDGE AND STRUCTURES OFFICE

Washington State Department of Transportation

STANDARD PRESTRESSED CONCRETE GIRDERS

WF83G GIRDER DETAILS 1 OF 3

BRIDGE SHEET NO.

SHEET OF SHEETS

Last revised on : 7/19/2011

LETTERS SR STYLE NO. 5.6-A4-8

Wed Jul 20 10:42:10 2011

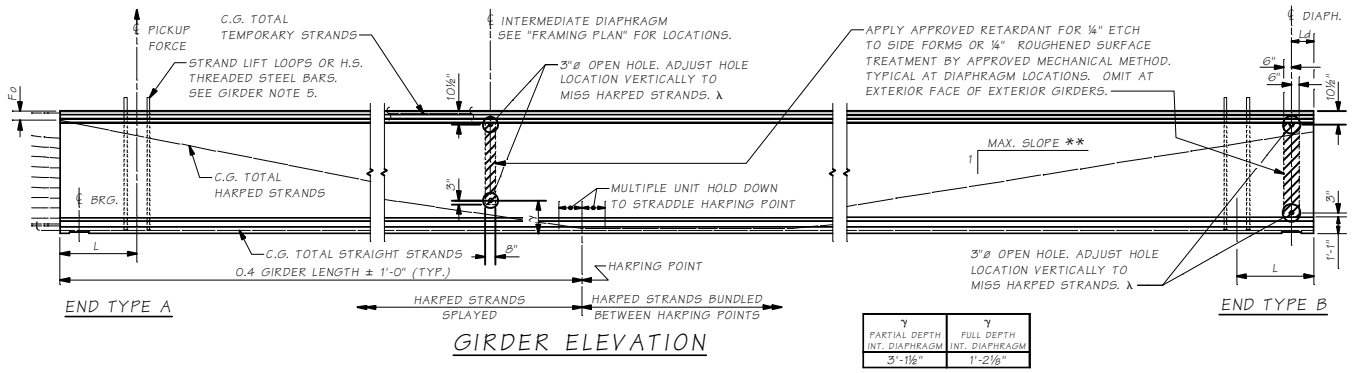

GIRDER ELEVATION

γ PARTIAL DEPTH INT. DIAPHRAGM	γ FULL DEPTH INT. DIAPHRAGM
3'-1½"	1'-2⅛"

** 8 : 1 MAXIMUM SLOPE FOR EACH HARPED STRAND

λ SEE GIRDER NOTE 9.

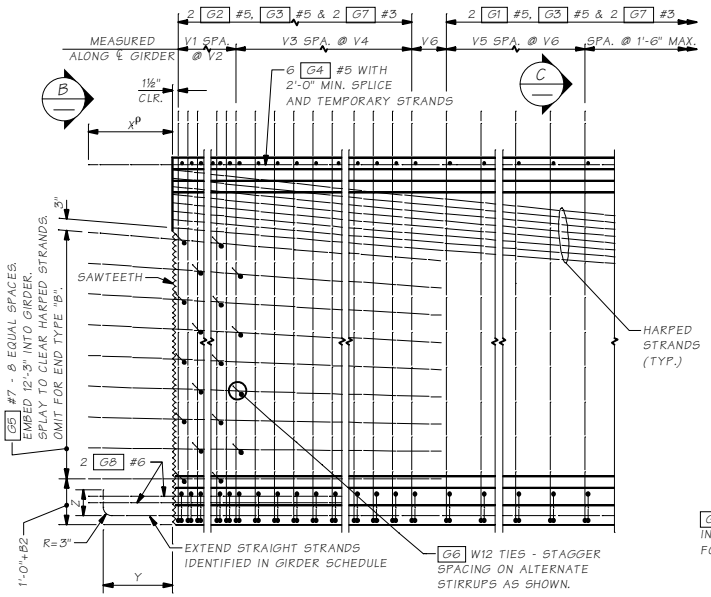

TYPICAL END ELEVATION

END TYPE C SHOWN, OTHER END TYPES SIMILAR.

ρ - X DIMENSION SHALL BE 1'-4" FOR G4 AT END TYPE A ONLY.

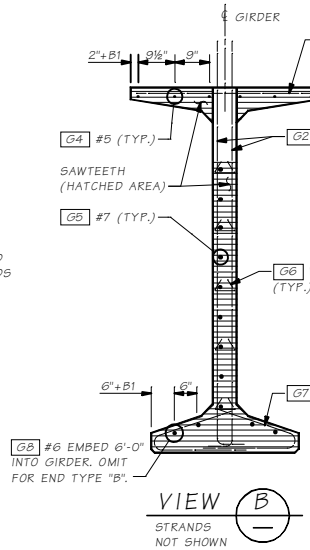

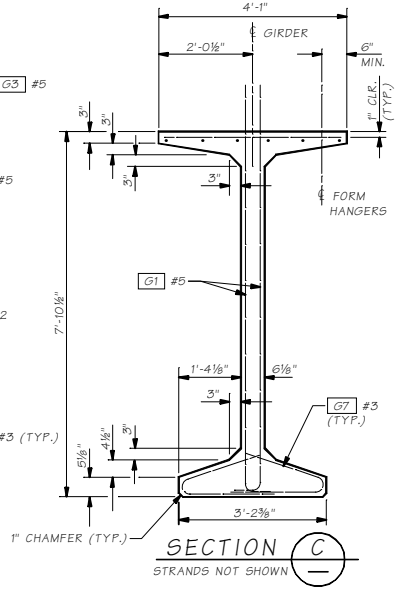

END TYPE PROPERTIES

END TYPE	BEARING RECESS	X	Y	Z	SAWTEETH
A	YES	1'-10"ρ	1'-6"	9"	YES
B	YES	0"	0"	0"	NO
C	NO	1'-10"	1'-6"	9"	YES
D	NO	1'-10"	SEE "STRAND EXTENSION DETAIL"		YES

BAR END PLACEMENT FOR END TYPE C

ENDS AHEAD ON STATION	ENDS BACK ON STATION
G5 BARS LEFT OF ℄	G5 BARS RIGHT OF ℄
B1 = 0" (G4 , G8)	B1 = 1½" (G4 , G8)
B2 = 0" (G5)	B2 = 3" (G5)

BENDING DIAGRAM (ALL DIMENSIONS ARE OUT TO OUT)

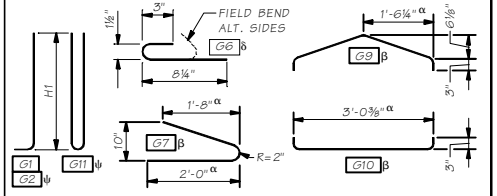

α - VARIES FOR SKEWED ENDS.
δ - #3 OR #4 MAY BE SUBSTITUTED. FIELD BENDING IS OPTIONAL.
β - PAIRS OF G7 BARS, OR G9 AND G10 BARS, MAY BE USED INTERCHANGEABLY AS BOTTOM FLANGE TIES.
ψ - 1 G11 MAY BE SUBSTITUTED FOR 2 G2 WITHIN THE V1 SPA. @ V2.

Bridge Design Engr.	M:\Standards - In Progress\Girders\WF\WF95G.MAN				REGION NO.	STATE	FED. AID PROJ. NO.	SHEET NO.	TOTAL SHEETS
Supervisor					10	WASH.			
Designed By									
Checked By					JOB NUMBER				
Detailed By									
Bridge Projects Engr.									
Prelim. Plan By									
Architect/Specialist	DATE	REVISION	BY	APP'D					

BRIDGE AND STRUCTURES OFFICE

Washington State Department of Transportation

STANDARD PRESTRESSED CONCRETE GIRDERS

WF95G GIRDER DETAILS 1 OF 3

BRIDGE SHEET NO.

SHEET OF SHEETS

Last revised on : 07/19/2011

SHEET

TITLE NO.

SR

5.6-A4-9

Wed Jul 20 10:42:11 2011

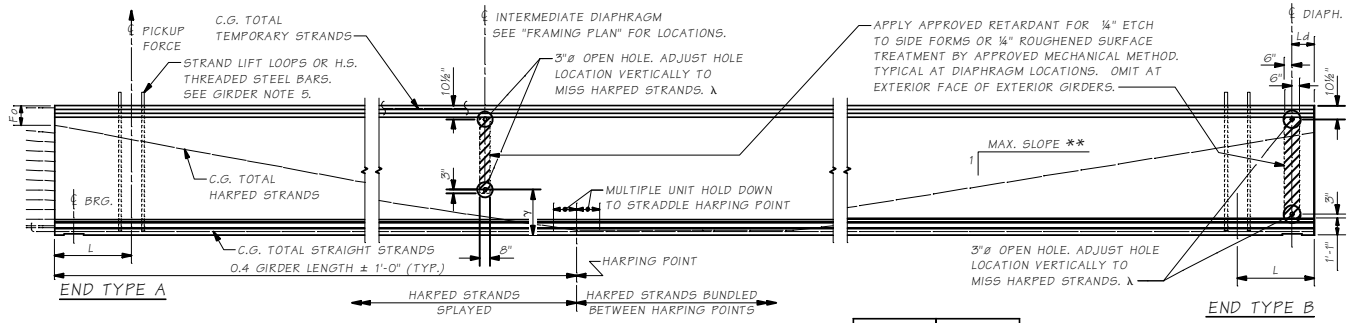

GIRDER ELEVATION

γ PARTIAL DEPTH INT. DIAPHRAGM	γ FULL DEPTH INT. DIAPHRAGM
2'-8"	1'-2⅛"

** 8 : 1 MAXIMUM SLOPE FOR EACH HARPED STRAND

λ SEE GIRDER NOTE 9.

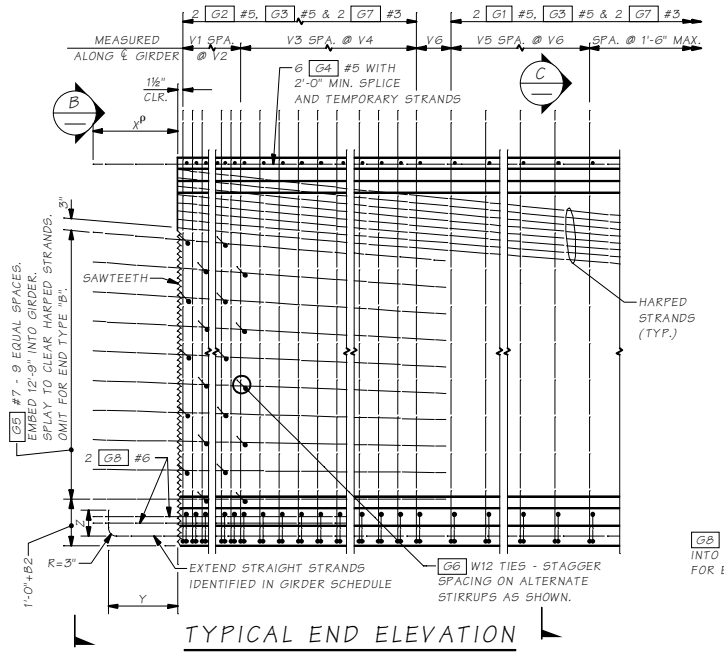

TYPICAL END ELEVATION

END TYPE C SHOWN, OTHER END TYPES SIMILAR.

ρ - X DIMENSION SHALL BE 1'-4" FOR G4 AT END TYPE A ONLY.

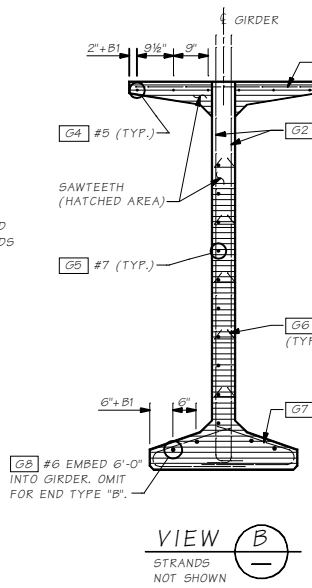

VIEW B
STRANDS NOT SHOWN

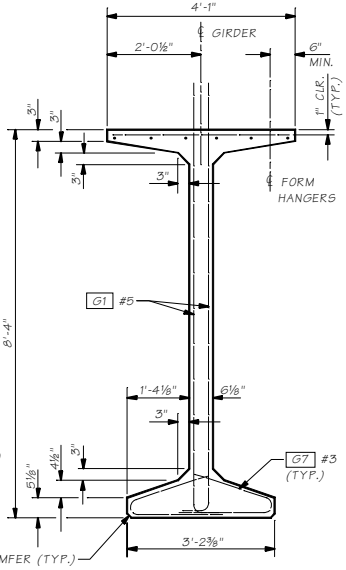

SECTION C
STRANDS NOT SHOWN

END TYPE PROPERTIES					
END TYPE	BEARING RECESS	X	Y	Z	SAWTEETH
A	YES	1'-10"ρ	1'-6"	9"	YES
B	YES	0"	0"	0"	NO
C	NO	1'-10"	1'-6"	9"	YES
D	NO	1'-10"	SEE "STRAND EXTENSION DETAIL"		YES

BAR END PLACEMENT FOR END TYPE C	
ENDS AHEAD ON STATION	ENDS BACK ON STATION
G5 BARS LEFT OF ℄	G5 BARS RIGHT OF ℄
B1 = 0" (G4 , G8)	B1 = 1½" (G4 , G8)
B2 = 0" (G5)	B2 = 3" (G5)

BENDING DIAGRAM (ALL DIMENSIONS ARE OUT TO OUT)

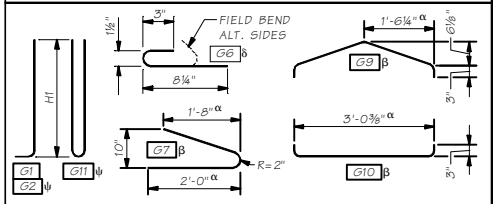

α - VARIES FOR SKEWED ENDS.
δ - #3 OR #4 MAY BE SUBSTITUTED. FIELD BENDING IS OPTIONAL.
β - PAIRS OF G7 BARS, OR G9 AND G10 BARS, MAY BE USED INTERCHANGEABLY AS BOTTOM FLANGE TIES.
ψ - 1 G11 MAY BE SUBSTITUTED FOR 2 G2 WITHIN THE V1 SPA. @ V2.

Bridge Design Engr.	M:\Standards - In Progress\Girders\WF\WF100G.MAN				REGION NO.	STATE	FED. AID PROJ. NO.	SHEET NO.	TOTAL SHEETS
Supervisor					10	WASH.			
Designed By					JOB NUMBER				
Checked By									
Detailed By									
Bridge Projects Engr.									
Prelim. Plan By									
Architect/Specialist	DATE	REVISION	BY	APP'D					

BRIDGE AND STRUCTURES OFFICE

Washington State Department of Transportation

STANDARD PRESTRESSED CONCRETE GIRDERS

WF100G GIRDER DETAILS 1 OF 3

BRIDGE SHEET NO.

SHEET OF SHEETS

Last revised on : 7/19/2011

JEBES ON FILE SRS

5.6-A4-10

Wed Jul 20 10:42:11 2011

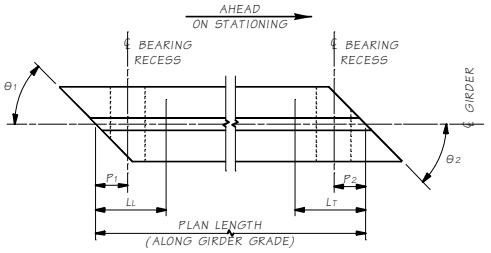

GIRDER SCHEDULE LEGEND

LL AND LT ARE SHIPPING SUPPORT LOCATIONS AT LEADING AND TRAILING ENDS, RESPECTIVELY.

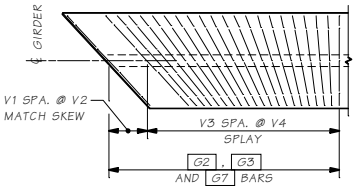

TRANSVERSE REINFORCING SKEWED ENDS

LENGTH OF G3 AND G7 VARY WITH SKEW.
ONLY TRANSVERSE REINFORCEMENT SHOWN.

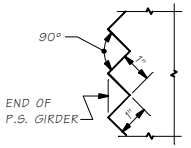

SAWTOOTH DETAILS

SAWTEETH ARE FULL WIDTH - USE SAWTOOTH KEYS FROM BOTTOM OF BOTTOM FLANGE TO BOTTOM OF LOWEST HARPED STRAND AS WELL AS TOP FLANGE ADJACENT TO HARPED STRANDS.

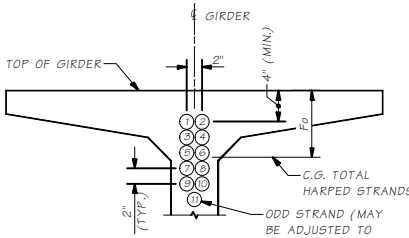

STRAND PATTERN AT GIRDER END

HARPED STRAND LOCATION SEQUENCE SHALL BE AS SHOWN (1), (2) ETC.

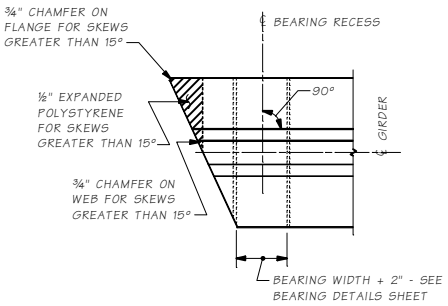

PLAN

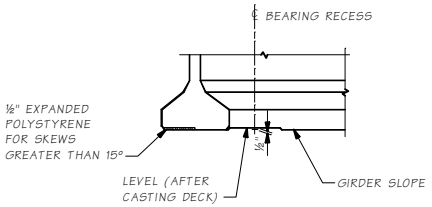

ELEVATION

BEARING RECESS AND BOTTOM FLANGE SPALL PROTECTION DETAIL

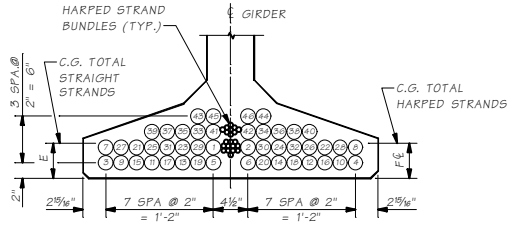

STRAND PATTERN AT ℄ SPAN

STRAIGHT STRAND LOCATION SEQUENCE SHALL BE AS SHOWN (1), (2) ETC.

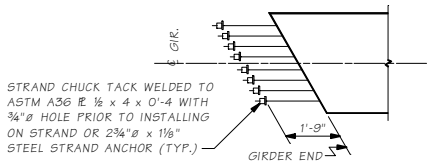

STRAND EXTENSION DETAIL

ANCHOR STRAND WITH TWO PIECE WEDGES BEFORE GIRDER ERECTION. VERIFY WEDGES ARE SEATED TIGHTLY IMMEDIATELY BEFORE PLACING DIAPHRAGM CONCRETE.

Bridge Design Engr:	M:\Standards - In Progress\Girders\WF\DETAILS 2 OF 3.MAN				REGION NO.	STATE	FED. AID PROJ. NO.	SHEET NO.	TOTAL SHEETS
Supervisor					10	WASH.			
Designed By									
Checked By					JOB NUMBER				
Detailed By									
Bridge Projects Engr:									
Prelim. Plan By									
Architect/Specialist	DATE	REVISION	BY	APP'D					

BRIDGE AND STRUCTURES OFFICE

Washington State Department of Transportation

STANDARD PRESTRESSED CONCRETE GIRDERS

WF GIRDER DETAILS 2 OF 3

BRIDGE SHEET NO. | SHEET | OF | SHEETS

Last revised on : 7/8/2011

JEFFERS ON ETAL SS

5.6-A4-11

Wed Jul 20 10:42:11 2011

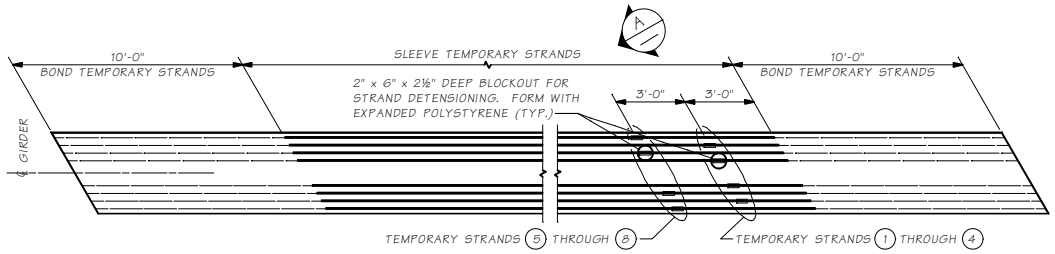

PLAN
PRETENSIONED TEMPORARY TOP STRANDS ALTERNATE

SEE "GIRDER SCHEDULE" FOR NUMBER OF TEMPORARY STRANDS REQUIRED.

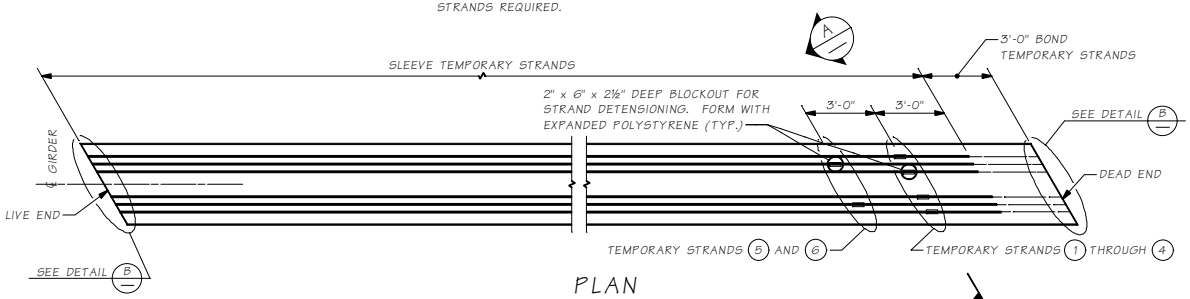

PLAN
POST-TENSIONED TEMPORARY TOP STRANDS ALTERNATE

SEE "GIRDER SCHEDULE" FOR NUMBER OF TEMPORARY STRANDS REQUIRED. POST-TENSIONED ALTERNATE ONLY AVAILABLE FOR 6 OR FEWER TEMPORARY STRANDS.

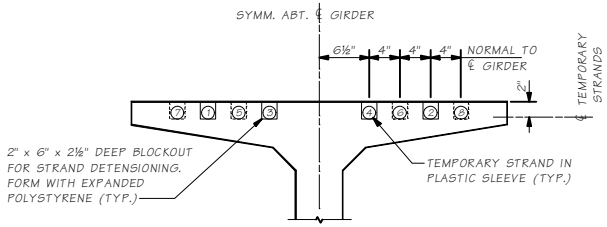

SECTION A

NOTES:

1. TEMPORARY STRAND LOCATION SEQUENCE SHALL BE AS SHOWN (1), (2) ETC.
2. STRANDS (7) AND (8) ARE NOT AVAILABLE FOR POST-TENSIONED ALTERNATE.

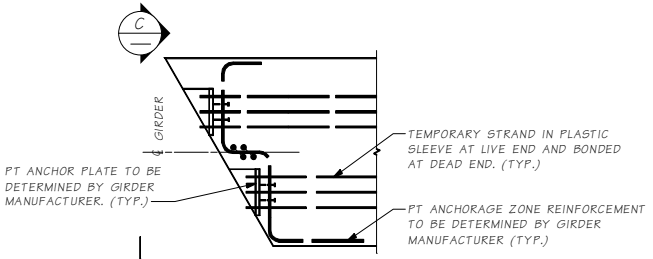

DETAIL B

LIVE END SHOWN
DEAD END SIMILAR.

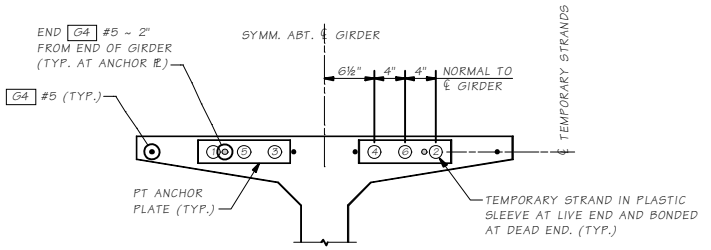

VIEW C

TEMPORARY STRAND LOCATION SEQUENCE SHALL BE AS SHOWN (1), (2) ETC.

Last revised on : 7/8/2011

Bridge Design Engr.	M:\Standards - In Progress\Girders\WF\DETAILS 3 OF 3.MAN				REGION NO.	STATE	FED. AID PROJ. NO.	SHEET NO.	TOTAL SHEETS
Supervisor					10	WASH.			
Designed By					JOB NUMBER				
Checked By									
Detailed By									
Bridge Projects Engr.									
Prelim. Plan By									
Architect/Specialist	DATE	REVISION	BY	APP'D					

Wed Jul 20 10:42:11 2011

BRIDGE AND STRUCTURES OFFICE

Washington State Department of Transportation

STANDARD PRESTRESSED CONCRETE GIRDERS

WF GIRDER DETAILS 3 OF 3

BRIDGE SHEET NO.

SHEET OF SHEETS

SHEETS

FILE NO.

SR

5.6-A4-12

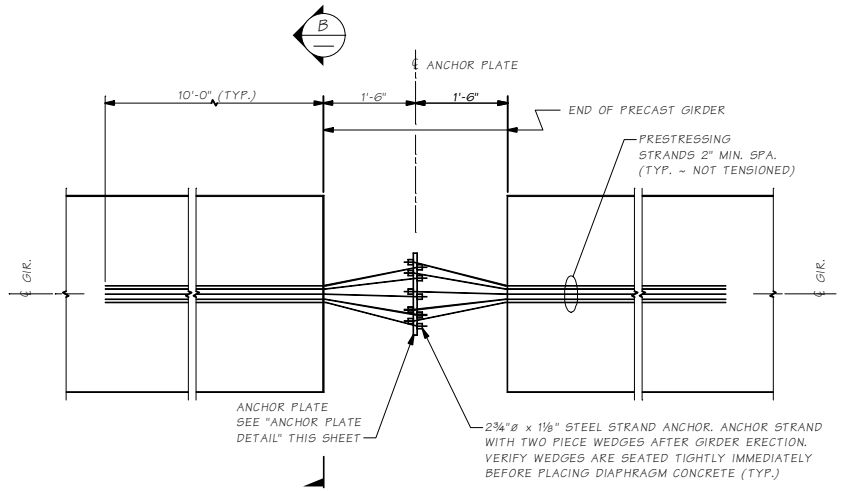

ADDITIONAL STRAND EXTENSION DETAIL

n = ??? TOTAL NUMBER OF ADDITIONAL EXTENDED STRANDS

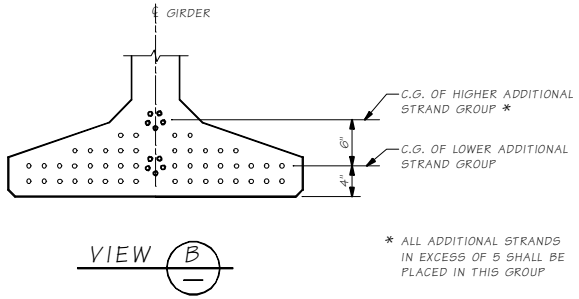

* ALL ADDITIONAL STRANDS IN EXCESS OF 5 SHALL BE PLACED IN THIS GROUP

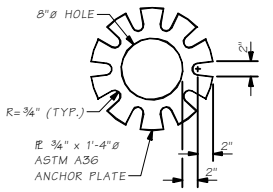

ANCHOR PLATE DETAIL

Last revised on : 7/19/2011

SHEETS NO. ELEM SR

5.6-A4-13

Wed Jul 20 10:42:12 2011

Bridge Design Engr.	M:\Standards - In Progress\Girders\WF\ADDITIONAL STRANDS.MAN				REGION NO.	STATE	FED. AID PROJ. NO.	SHEET NO.	TOTAL SHEETS	BRIDGE AND STRUCTURES OFFICE
Supervisor					10	WASH.				Washington State Department of Transportation
Designed By										STANDARD PRESTRESSED CONCRETE GIRDERS
Checked By					JOB NUMBER					ADDITIONAL EXTENDED STRANDS
Detailed By										BRIDGE SHEET NO.
Bridge Projects Engr.										SHEET OF SHEETS
Prelim. Plan By										
Architect/Specialist	DATE	REVISION	BY	APP'D						

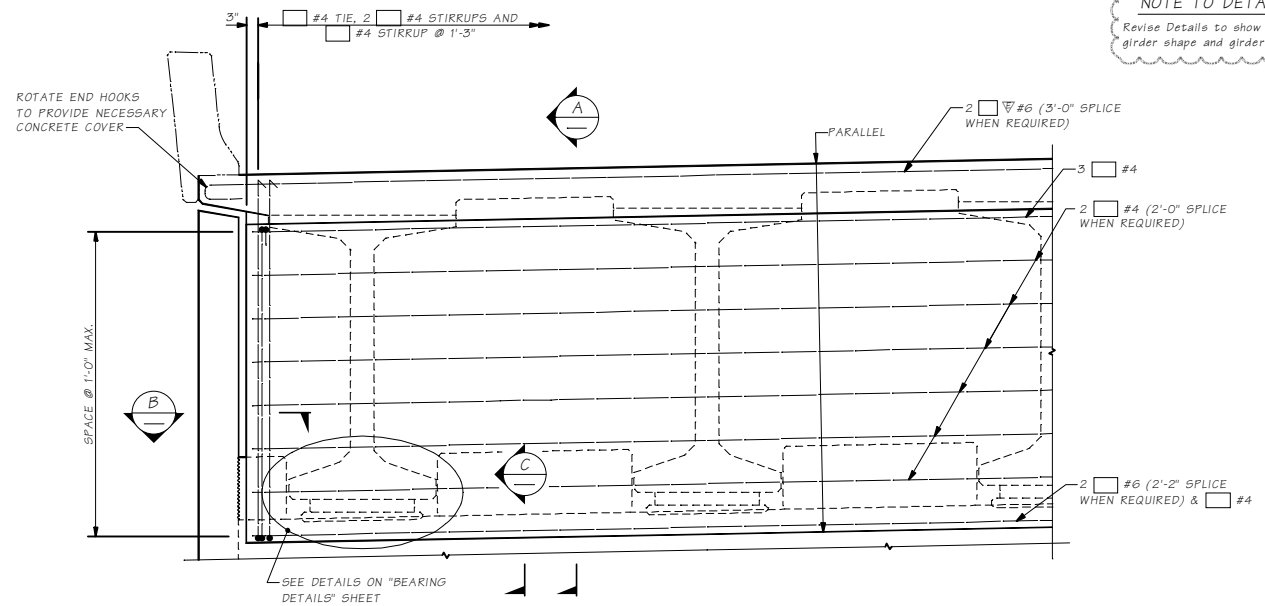

ELEVATION
END DIAPHRAGM

DIMENSIONS ARE ALONG ℄ DIAPHRAGM

NOTE TO DETAILER:
Revise Details to show correct girder shape and girder spacing.

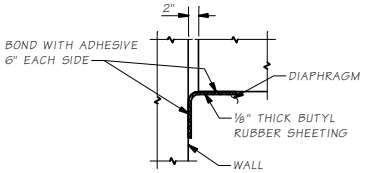

SECTION B

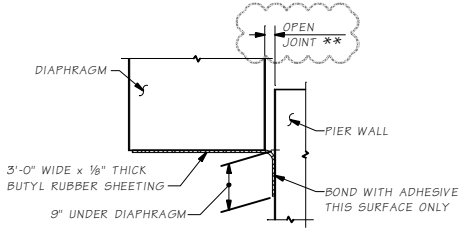

SECTION C

Bridge length	Open Joint
L ≤ 200'	** = 1.5"
200' < L ≤ 300'	** = 2.0"
300' < L ≤ 400'	** = 2.5"
L > 400'	Special design

GIRDER	W
WF36G	0"
WF42G	0"
WF50G	1"
WF58G	2"
WF66G	3"
WF74G	4"
WF83G	4"
WF95G	4"
WF100G	5"

NOTE TO DESIGNER:
Insert correct dimension value

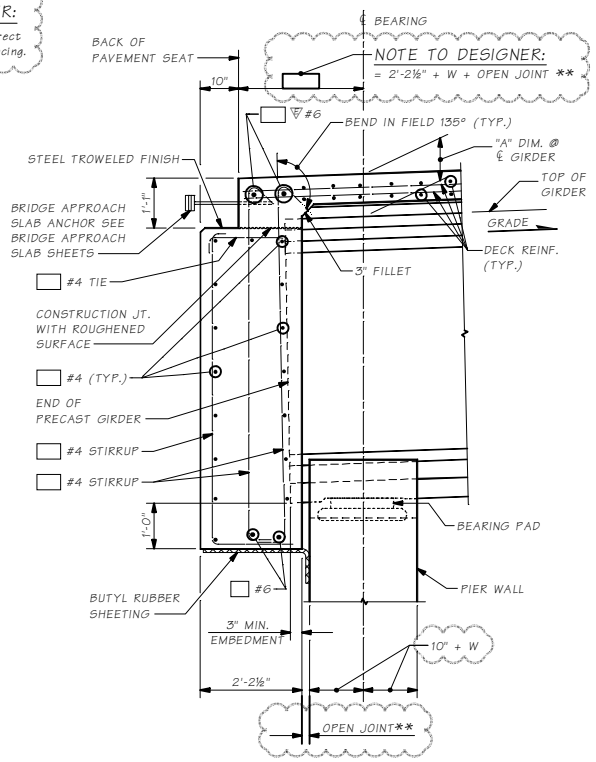

SECTION A

SEE GIRDER SHEETS FOR DIMENSION "A".
ALL LONGITUDINAL DIMENSIONS ARE NORMAL TO PIER WALL.
+ GRADE SHOWN, - GRADE SIMILAR.

NOTES:

1. GIRDERS SHALL BE HELD RIGIDLY IN PLACE WHEN DIAPHRAGMS ARE PLACED.
2. CUT/RELEASE GIRDER TEMPORARY STRANDS BEFORE CASTING DIAPHRAGM. SEE TEMPORARY STRAND CUTTING SEQUENCE.
3. EXTENDED STRANDS AND GIRDER REINFORCING NOT SHOWN FOR CLARITY.

Bridge Design Engr.	M:\Standards - In Progress\Girders\WF\END DIAPHRAGM.MAN				REGION NO.	STATE	FED. AID PROJ. NO.	SHEET NO.	TOTAL SHEETS
Supervisor					10	WASH.			
Designed By					JOB NUMBER				
Checked By									
Detailed By									
Bridge Projects Engr.									
Prelim. Plan By									
Architect/Specialist	DATE	REVISION	BY	APP'D					

BRIDGE AND STRUCTURES OFFICE

Washington State Department of Transportation

STANDARD PRESTRESSED CONCRETE GIRDERS

END DIAPHRAGM DETAILS

BRIDGE SHEET NO

SHEET OF SHEETS

Last revised on : 7/19/2011

SHEET NO. FILE SR

5.6-A4-14

Wed Jul 20 10:42:12 2011

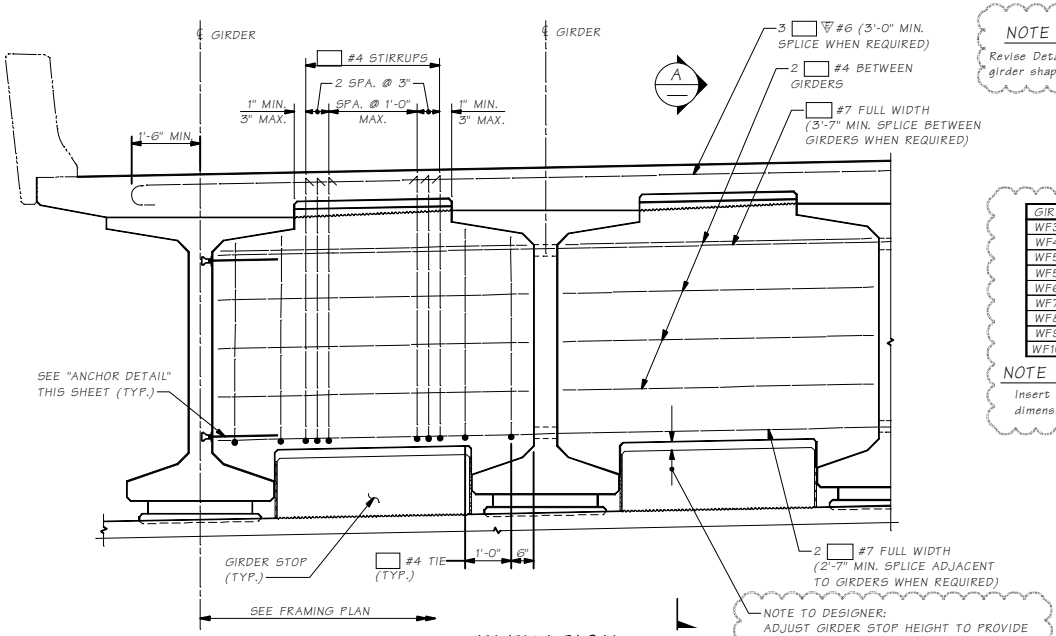

ELEVATION END DIAPHRAGM

DIMENSIONS ARE ALONG ℄ DIAPHRAGM

NOTE TO DETAILER:
Revise Details to show correct girder shape and girder spacing.

GIRDER	D
WF36G	1'-11"
WF42G	2'-5"
WF50G	3'-1"
WF58G	3'-9"
WF66G	4'-5"
WF74G	5'-1"
WF83G	5'-9⅝"
WF95G	6'-9½"
WF100G	7'-3"

NOTE TO DESIGNER:
Insert appropriate dimension value for "D"

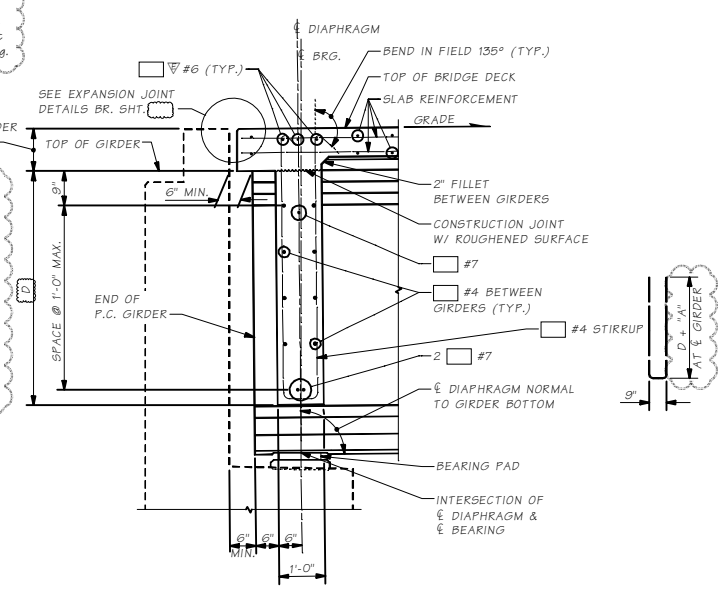

SECTION A

LONGITUDINAL DIMENSIONS ARE NORMAL TO DIAPHRAGM.
GIRDER STOP NOT SHOWN FOR CLARITY.
+ GRADE SHOWN, -GRADE SIMILAR.

NOTES:

1. GIRDERS SHALL BE HELD RIGIDLY IN PLACE WHEN DIAPHRAGMS ARE PLACED.
2. IT MAY BE NECESSARY TO THREAD #7 REINFORCING BARS THROUGH HOLES IN GIRDERS PRIOR TO PLACING EXTERIOR GIRDERS.
3. CUT/RELEASE GIRDER TEMPORARY STRANDS BEFORE CASTING DIAPHRAGM. SEE TEMPORARY STRAND CUTTING SEQUENCE.
4. FOR CONCRETE PLACEMENT PROCEDURE SEE CONSTRUCTION SEQUENCE SHEETS.

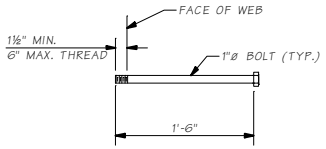

ANCHOR DETAIL

ASTM A-307

Bridge Design Engr.	M:\Standards - In Progress\Girders\WF\END DIAPHRAGM - L ABUT.MAN				REGION NO.	STATE	FED. AID PROJ. NO.	SHEET NO.	TOTAL SHEETS
Supervisor					10	WASH			
Designed By					JOB NUMBER				
Checked By									
Detailed By									
Bridge Projects Engr.									
Prelim. Plan By									
Architect/Specialist	DATE	REVISION	BY	APP'D					

Wed Jul 20 10:42:12 2011

BRIDGE AND STRUCTURES OFFICE

Washington State Department of Transportation

STANDARD PRESTRESSED CONCRETE GIRDERS

END DIAPHRAGM DETAILS

BRIDGE SHEET NO.

SHEET OF SHEETS

Last revised on : 7/19/2011

SR FILE NO. SHEET

5.6-A4-15

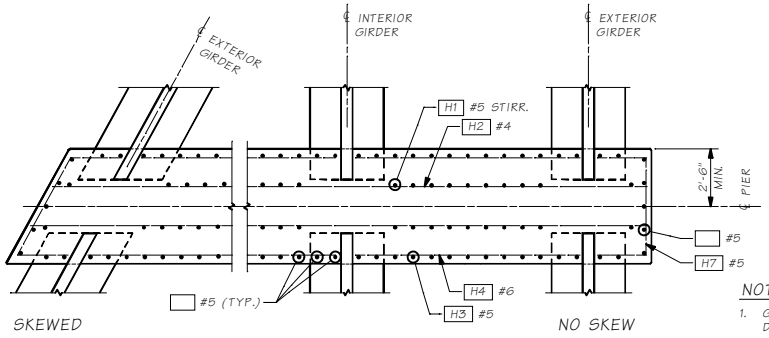

SECTION B

ELEVATION AT TOP OF OAK BLOCK

GIRDER	PIER 7	
	BACK STATION	AHEAD STATION

NOTES:

1. GIRDERS SHALL BE HELD RIGIDLY IN PLACE WHEN DIAPHRAGMS ARE PLACED.
2. CUT/RELEASE GIRDER TEMPORARY STRANDS BEFORE CASTING DIAPHRAGM. SEE TEMPORARY STRAND CUTTING SEQUENCE.
3. EXTENDED STRANDS AND GIRDER REINFORCING NOT SHOWN FOR CLARITY.
4. LONGITUDINAL DIMENSIONS ARE NORMAL TO SKEW.
5. FOR CONCRETE PLACEMENT PROCEDURE SEE "SUPERSTRUCTURE CONSTRUCTION SEQUENCE" SHEET.

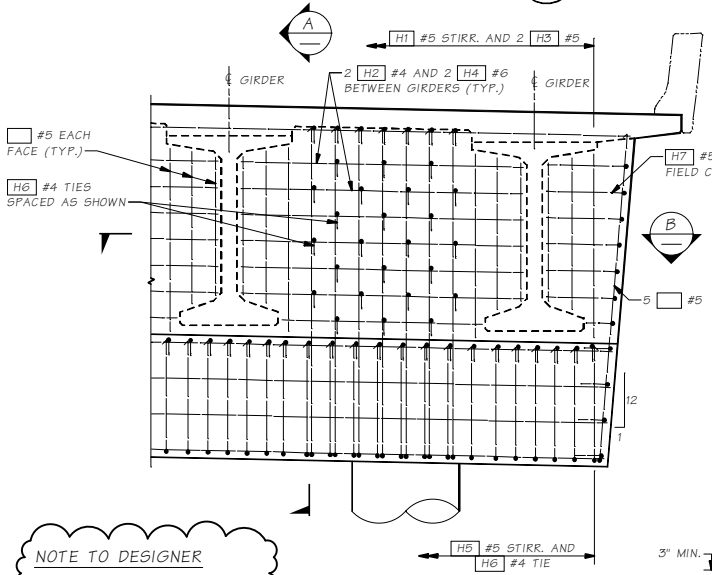

ELEVATION

GIRDER	B3	B4
WF36G	3"	3"
WF42G	3"	3"
WF50G	3"	3"
WF58G	3"	3"
WF66G	4½"	3½"
WF74G	4½"	4"
WF83G	4½"	4½"
WF95G	4½"	5"
WF100G	5"	5½"

NOTE TO DESIGNER

Replace B3 and B4 with appropriate values.

NOTE TO DESIGNER

The actual bar size and spacing shall be determined by the designer.

NOTE TO DETAILER:

Revise Details to show correct girder height.

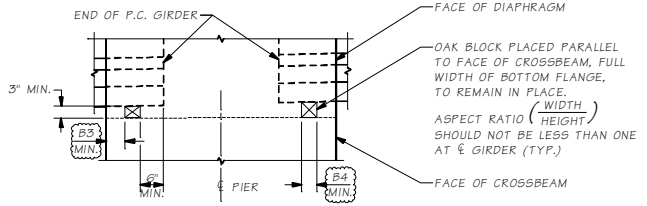

OAK BLOCK DETAIL

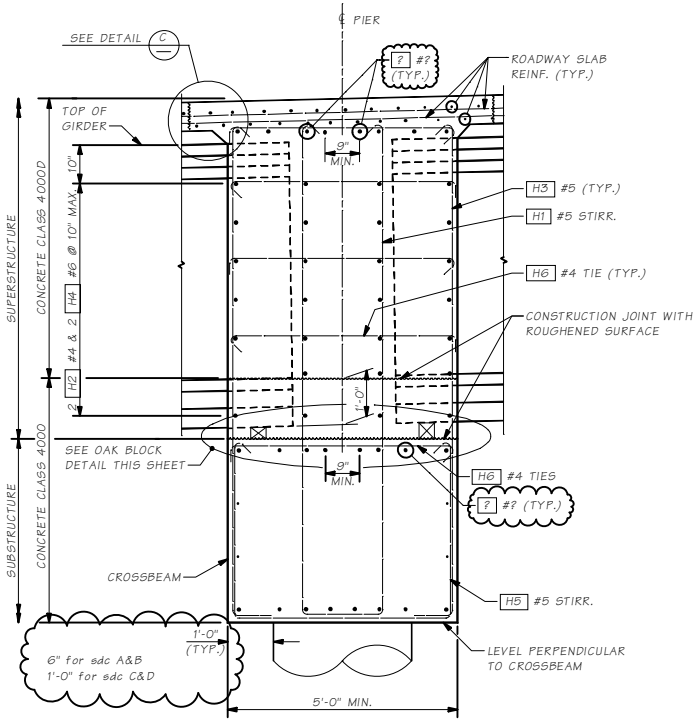

SECTION A

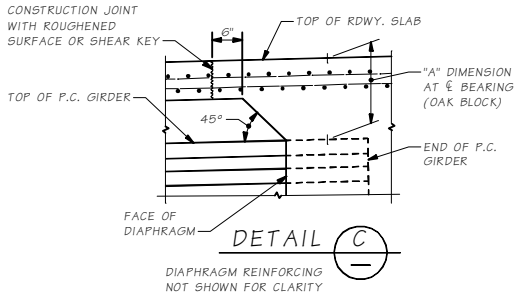

DETAIL C

DIAPHRAGM REINFORCING NOT SHOWN FOR CLARITY

Bridge Design Engr:	M:\Standards - In Progress\Girders\WF\FLUSH INTERMEDIATE PIER DIAPHRAGM.MAN								
Supervisor					REGION NO.	STATE	FED. AID PROJ. NO.	SHEET NO.	TOTAL SHEETS
Designed By					10	WASH			
Checked By									
Detailed By					JOB NUMBER				
Bridge Projects Engr.									
Prelim. Plan By									
Architect/Specialist	DATE	REVISION	BY	APP'D					

BRIDGE AND STRUCTURES OFFICE

Washington State Department of Transportation

STANDARD PRESTRESSED CONCRETE GIRDERS

FLUSH DIAPHRAGM AT INTERMEDIATE PIER DETAILS

BRIDGE SHEET NO.

SHEET OF SHEETS

Last revised on : 7/20/2011

DESIGNED CHECKED DRAWN

5.6-A4-16

Wed Jul 20 10:42:12 2011

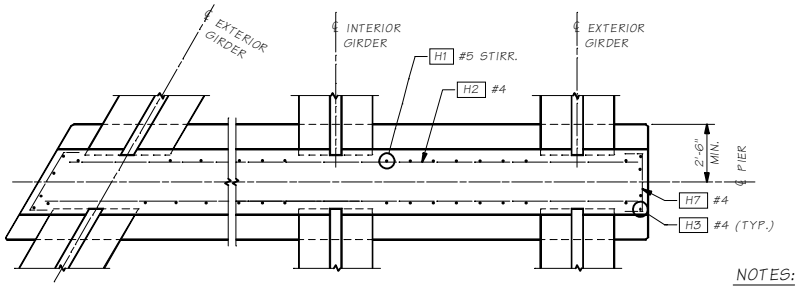

SECTION B

ELEVATION AT TOP OF OAK BLOCK

GIRDER	PIER ?	
	BACK STATION	AHEAD STATION

NOTES:

1. GIRDERS SHALL BE HELD RIGIDLY IN PLACE WHEN DIAPHRAGMS ARE PLACED.
2. CUT/RELEASE GIRDER TEMPORARY STRANDS BEFORE CASTING DIAPHRAGM. SEE TEMPORARY STRAND CUTTING SEQUENCE.
3. EXTENDED STRANDS AND GIRDER REINFORCING NOT SHOWN FOR CLARITY.
4. LONGITUDINAL DIMENSIONS ARE NORMAL TO SKEW.
5. FOR CONCRETE PLACEMENT PROCEDURE SEE "SUPERSTRUCTURE CONSTRUCTION SEQUENCE" SHEET.

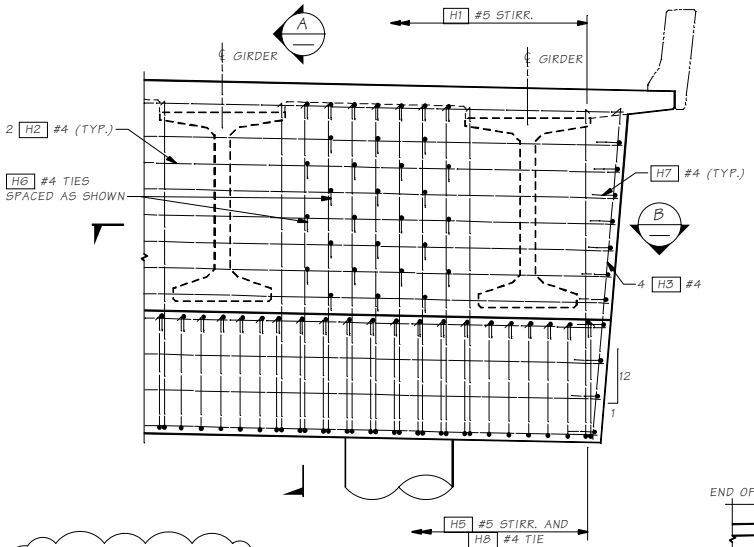

ELEVATION

NOTES TO DESIGNER

1. Flush Diaphragms are preferred.
2. The actual bar size and spacing shall be determined by the designer.

NOTE TO DETAILER:

Revise Details to show correct girder height.

GIRDER	B3	B4
WF36G	3"	3"
WF42G	3"	3"
WF50G	3"	3"
WF58G	3"	3"
WF66G	4½"	3½"
WF74G	4½"	4"
WF83G	4½"	4½"
WF95G	4½"	5"
WF100G	5"	5½"

NOTE TO DESIGNER

Replace B3 and B4 with appropriate values.

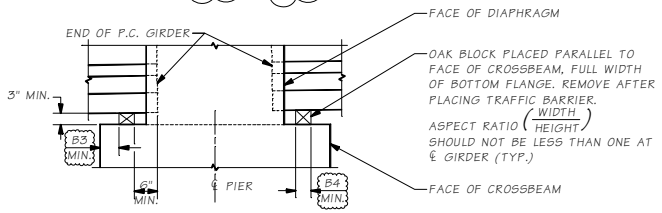

OAK BLOCK DETAIL

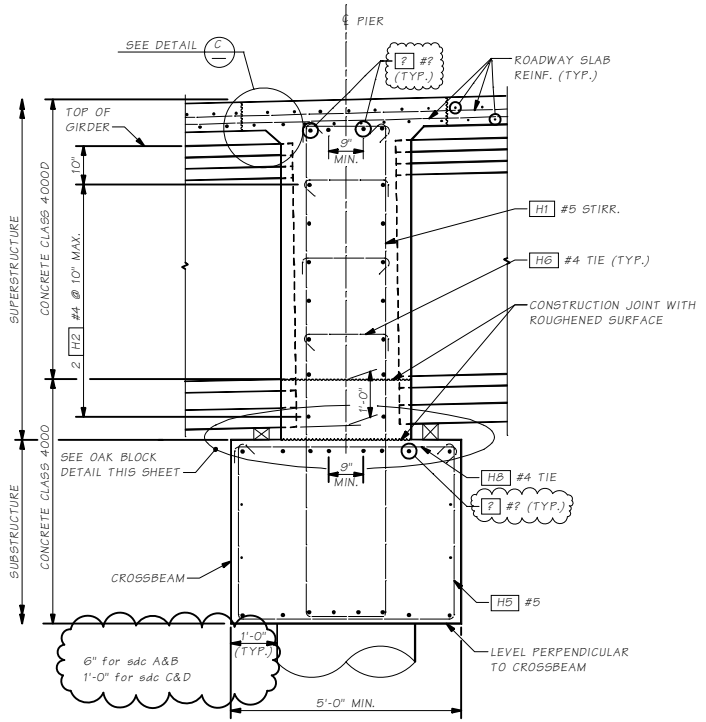

SECTION A

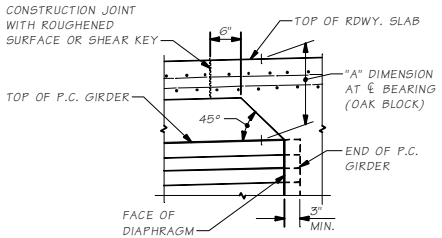

DETAIL C

DIAPHRAGM REINFORCING NOT SHOWN FOR CLARITY

Bridge Design Engr.	M:\Standards - In Progress\Girders\WF\RECESSED INTERMEDIATE PIER DIAPHRAGM.MAN				REGION NO.	STATE	FED. AID PROJ. NO.	SHEET NO. / TOTAL SHEETS
Supervisor					10	WASH.		
Designed By					JOB NUMBER			
Checked By								
Detailed By								
Bridge Projects Engr.								
Prelim. Plan By								
Architect/Specialist	DATE	REVISION	BY	APP'D				

BRIDGE AND STRUCTURES OFFICE

Washington State Department of Transportation

STANDARD PRESTRESSED CONCRETE GIRDERS

RECESSED DIAPHRAGM AT INTERMEDIATE PIER DETAILS

BRIDGE SHEET NO.

SHEET OF SHEETS

Last revised on : 7/20/2011

SHEET NO. FILE SR 5.6-A4-17

Wed Jul 20 10:42:13 2011

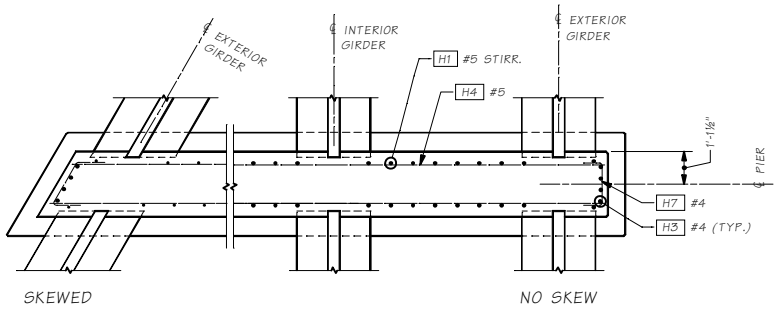

SECTION B

NOTE TO DETAILER:
Revise Details to show correct girder height.

ELEVATION AT TOP OF OAK BLOCK

GIRDER	PIER ?	
	BACK STATION	AHEAD STATION

GIRDER	DB	TYPICAL HINGE BAR SIZE
WF36G	2'-2"	#9
WF42G	2'-6"	#9
WF50G	2'-10"	#9
WF58G	3'-2"	#9
WF66G	3'-6"	#10
WF74G	3'-10"	#10
WF83G	3'-10"	#10
WF95G	3'-10"	#10
WF100G	3'-10"	#10

NOTE TO DESIGNER
Replace DB with appropriate value.

NOTE TO DESIGNER
The actual bar size and spacing shall be determined by the designer.

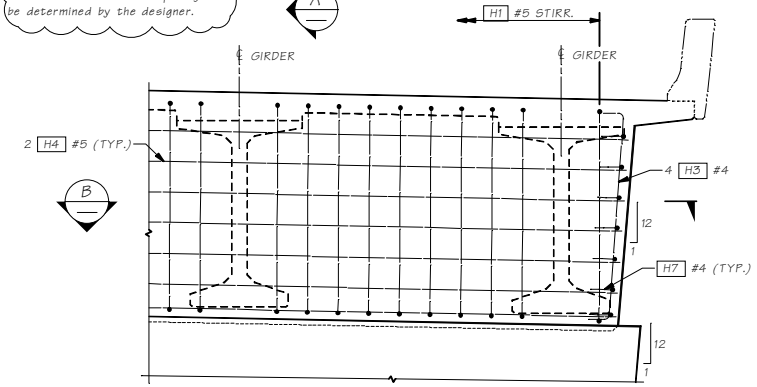

ELEVATION

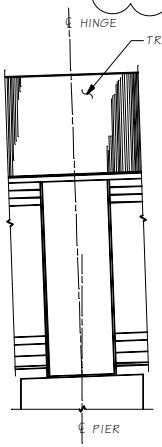

END VIEW
HINGE DIAPHRAGM

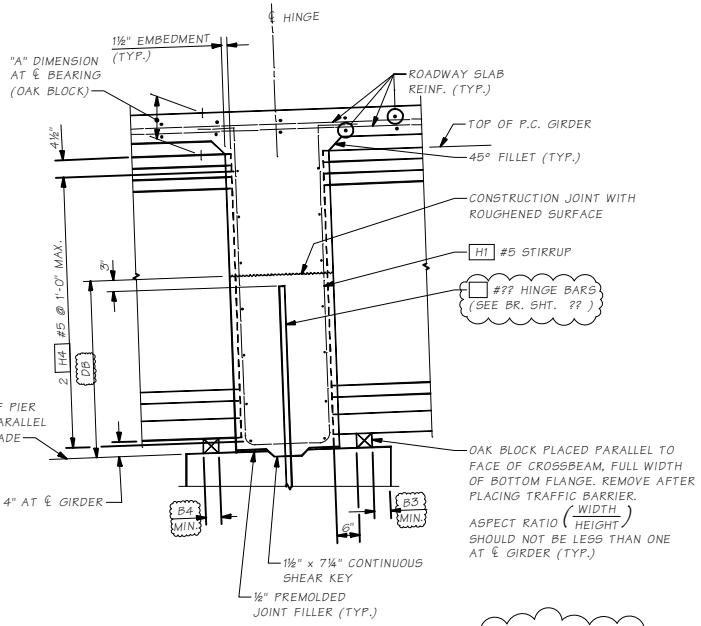

SECTION A

GIRDER	B3	B4
WF36G	3"	3"
WF42G	3"	3"
WF50G	3"	3"
WF58G	3"	3"
WF66G	4½"	3½"
WF74G	4½"	4"
WF83G	4½"	4½"
WF95G	4½"	5"
WF100G	5"	5½"

NOTE TO DESIGNER
Replace B3 and B4 with appropriate values.

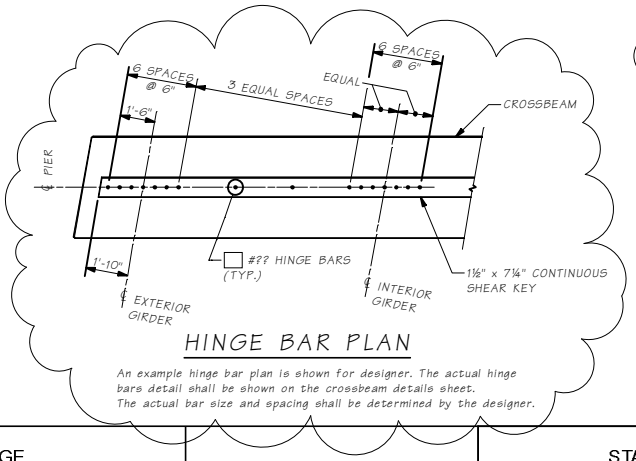

HINGE BAR PLAN

An example hinge bar plan is shown for designer. The actual hinge bars detail shall be shown on the crossbeam details sheet. The actual bar size and spacing shall be determined by the designer.

NOTES:

1. GIRDERS SHALL BE HELD RIGIDLY IN PLACE WHEN DIAPHRAGMS ARE PLACED.
2. CUT/RELEASE GIRDER TEMPORARY STRANDS BEFORE CASTING DIAPHRAGM. SEE TEMPORARY STRAND CUTTING SEQUENCE.
3. EXTENDED STRANDS AND GIRDER REINFORCING NOT SHOWN FOR CLARITY.
4. LONGITUDINAL DIMENSIONS ARE NORMAL TO SKEW.
5. FOR CONCRETE PLACEMENT PROCEDURE SEE "SUPERSTRUCTURE CONSTRUCTION SEQUENCE" SHEET.

Bridge Design Engr.	M:\Standards - In Progress\Girders\WF\HINGED INTERMEDIATE PIER DIAPHRAGM.MAN				REGION NO.	STATE	FED. AID PROJ. NO.	SHEET NO.	TOTAL SHEETS
Supervisor					10	WASH.			
Designed By					JOB NUMBER				
Checked By									
Detailed By									
Bridge Projects Engr.									
Prelim. Plan By									
Architect/Specialist	DATE	REVISION	BY	APP'D					

BRIDGE AND STRUCTURES OFFICE

Washington State Department of Transportation

STANDARD PRESTRESSED CONCRETE GIRDERS

HINGE DIAPHRAGM AT INTERMEDIATE PIER DETAILS

BRIDGE SHEET NO

SHEET OF SHEETS

Last revised on : 7/20/2011

PLOT DATE: Wed Jul 20 10:42:13 2011

PLOTTED BY: SR

DGN FILE

SHEET

5.6-A4-18

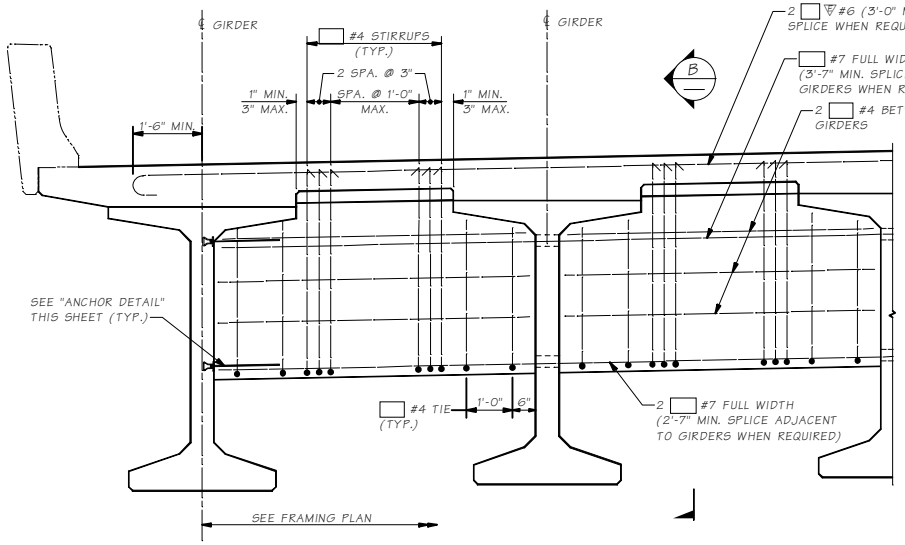

ELEVATION
INTERMEDIATE DIAPHRAGM

DIMENSIONS ARE ALONG DIAPHRAGM

NOTE TO DETAILER:
Revise Details to show correct girder height.

GIRDER	D
WF36G	2'-0⅞"
WF42G	2'-3"
WF50G	2'-7½"
WF58G	2'-10"
WF66G	3'-4¼"
WF74G	3'-9"
WF83G	5'-0"
WF95G	5'-0"
WF100G	5'-11"

NOTE TO DESIGNER:
Insert appropriate dimension value for "D"

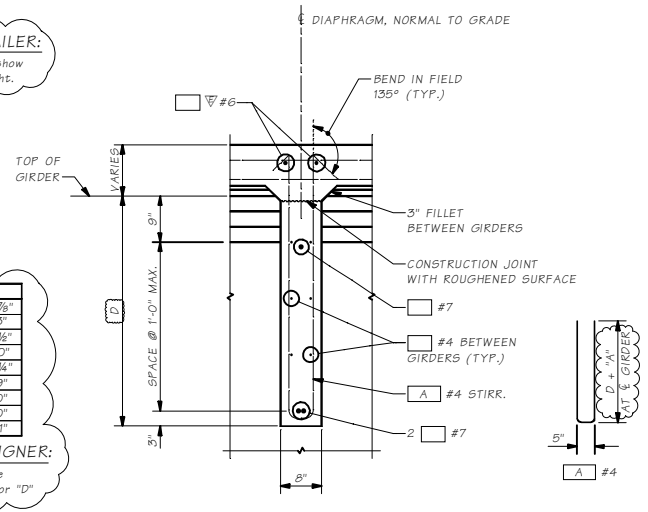

SECTION B

SEE "GIRDER DETAILS" SHEET FOR DIMENSION "A".

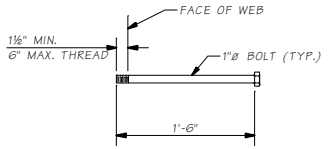

ANCHOR DETAIL

ASTM A-307

NOTE TO DESIGNER:
Full depth intermediate diaphragms are required for:

- I-5 bridges
- Other bridges crossing over roads of ADT>50,000

NOTES:

1. GIRDERS SHALL BE HELD RIGIDLY IN PLACE WHEN DIAPHRAGMS ARE PLACED.
2. IT MAY BE NECESSARY TO THREAD #7 REINFORCING BARS THROUGH HOLES IN GIRDERS PRIOR TO PLACING EXTERIOR GIRDERS.
3. CUT/RELEASE GIRDER TEMPORARY STRANDS BEFORE CASTING DIAPHRAGM. SEE TEMPORARY STRAND CUTTING SEQUENCE.
4. LONGITUDINAL DIMENSIONS ARE NORMAL TO SKEW.
5. FOR CONCRETE PLACEMENT PROCEDURE SEE "SUPERSTRUCTURE CONSTRUCTION SEQUENCE" SHEET.

Bridge Design Engr.	M:\Standards - In Progress\Girders\WF\PARTIAL INTERMEDIATE DIAPHRAGM.MAN				REGION NO.	STATE	FED. AID PROJ. NO.	SHEET NO.	TOTAL SHEETS
Supervisor					10	WASH.			
Designed By					JOB NUMBER				
Checked By									
Detailed By									
Bridge Projects Engr.									
Prelim. Plan By									
Architect/Specialist	DATE	REVISION	BY	APP'D					

BRIDGE AND STRUCTURES OFFICE

Washington State Department of Transportation

STANDARD PRESTRESSED CONCRETE GIRDERS

INTERMEDIATE DIAPHRAGM DETAILS

BRIDGE SHEET NO.

SHEET OF SHEETS

Wed Jul 20 10:42:13 2011

Last revised on : 7/20/2011

SR FILE NO. SHEET

5.6-A4-19

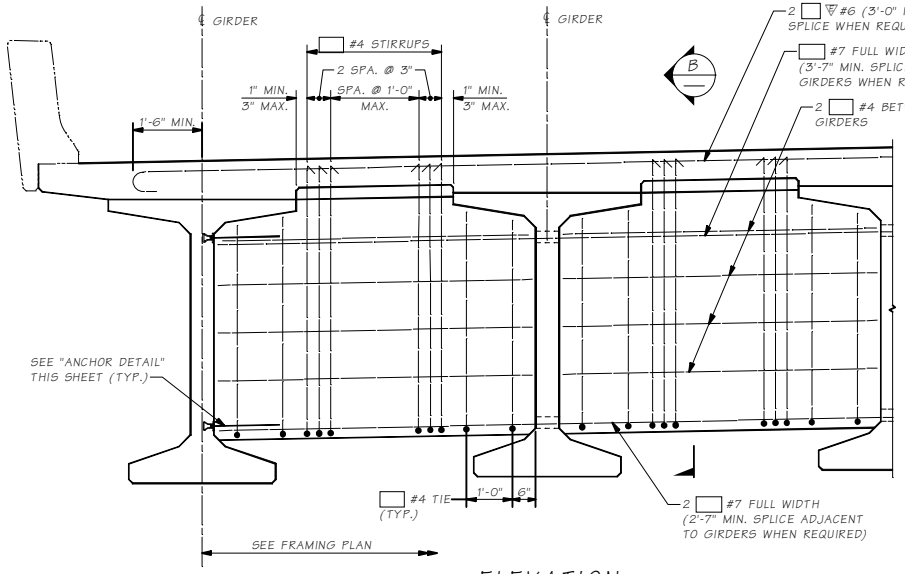

ELEVATION
INTERMEDIATE DIAPHRAGM

DIMENSIONS ARE ALONG DIAPHRAGM

NOTE TO DETAILER:
Revise Details to show correct girder height.

GIRDER	D
WF36G	2'-0⅞"
WF42G	2'-6⅞"
WF50G	3'-2⅞"
WF58G	3'-10⅞"
WF66G	4'-6⅞"
WF74G	5'-2⅞"
WF83G	5'-11½"
WF95G	6'-11⅜"
WF100G	7'-4⅞"

NOTE TO DESIGNER:
Insert appropriate dimension value for "D"

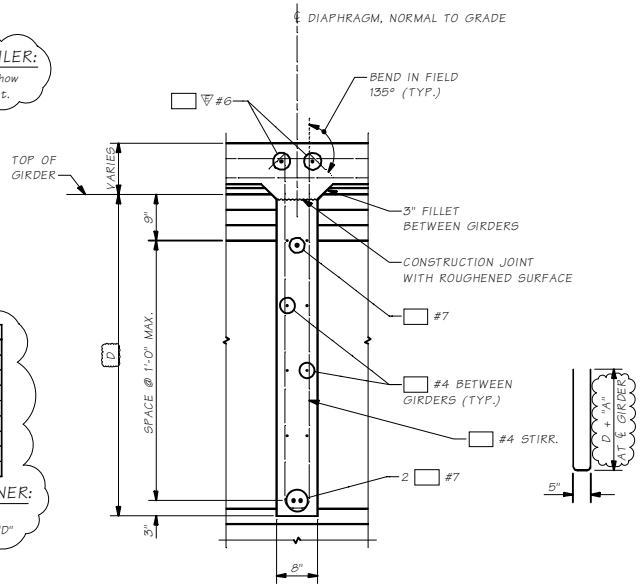

SECTION B

SEE "GIRDER DETAILS" SHEET FOR DIMENSION "A".

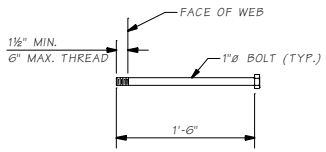

ANCHOR DETAIL

ASTM A-307

NOTE TO DESIGNER:
Full depth intermediate diaphragms are required for:

- I-5 bridges
- Other bridges crossing over roads of ADT>50,000

NOTES:

1. GIRDERS SHALL BE HELD RIGIDLY IN PLACE WHEN DIAPHRAGMS ARE PLACED.
2. IT MAY BE NECESSARY TO THREAD #7 REINFORCING BARS THROUGH HOLES IN GIRDERS PRIOR TO PLACING EXTERIOR GIRDERS.
3. CUT/RELEASE GIRDER TEMPORARY STRANDS BEFORE CASTING DIAPHRAGM. SEE TEMPORARY STRAND CUTTING SEQUENCE.
4. LONGITUDINAL DIMENSIONS ARE NORMAL TO SKEW.
5. FOR CONCRETE PLACEMENT PROCEDURE SEE "SUPERSTRUCTURE CONSTRUCTION SEQUENCE" SHEET.

Bridge Design Engr.	M:\Standards - In Progress\Girders\WF\FULL INTERMEDIATE DIAPHRAGM.MAN				REGION NO.	STATE	FED. AID PROJ. NO.	SHEET NO.	TOTAL SHEETS
Supervisor					10	WASH.			
Designed By					JOB NUMBER				
Checked By									
Detailed By									
Bridge Projects Engr.									
Prelim. Plan By									
Architect/Specialist	DATE	REVISION	BY	APP'D					

BRIDGE AND STRUCTURES OFFICE

Washington State Department of Transportation

STANDARD PRESTRESSED CONCRETE GIRDERS

INTERMEDIATE DIAPHRAGM DETAILS

BRIDGE SHEET NO

SHEET OF SHEETS

Wed Jul 20 10:42:13 2011

Last revised on : 7/20/2011

SR FILE NO. SHEET

5.6-A4-20

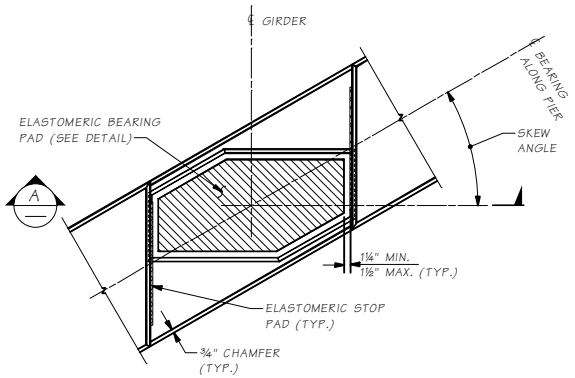

GROUT PAD DETAIL

GIRDER NOT SHOWN FOR CLARITY

Skew angle shown at 30°.

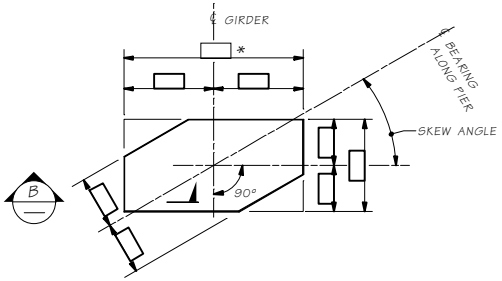

ELASTOMERIC BEARING PAD

LAMINATED ELASTOMERIC BEARING PAD
(☐ SHIMS).

Skew angle shown at 30°.
* For WF girders the edge of the bearing pad shall be set at 1" minimum to 9" maximum from the edge of the bottom flange.
For W girders, bulb tee and deck bulb tee girders the edge of the bearing pad shall be set at 1" from the edge of the bottom flange.

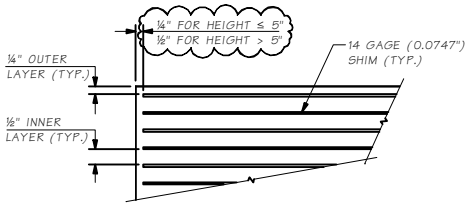

SECTION B

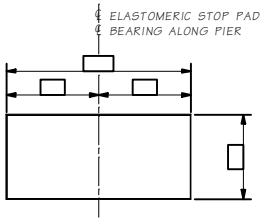

ELASTOMERIC STOP PAD

SHEAR MODULUS = 165 PSI

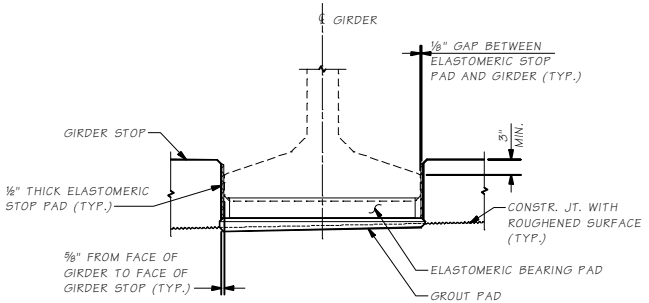

SECTION A

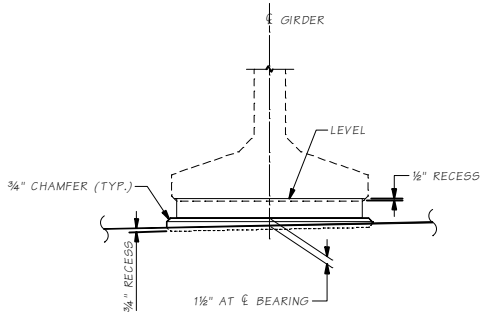

GROUT PAD ELEVATION

NOTES:

1. GIRDER STOPS SHALL BE CONSTRUCTED AFTER GIRDER PLACEMENT.
2. THE ELASTOMERIC STOP PADS SHALL BE CEMENTED TO GIRDER STOPS WITH APPROVED ADHESIVE.

BEARING DESIGN TABLE AASHTO METHOD B DESIGN	
SERVICE - I LIMIT STATE	
DEAD LOAD (DL) REACTION	KIPS
LIVE LOAD REACTION (W/O IMPACT)	KIPS
UNLOADED HEIGHT	IN
LOADED HEIGHT (DL)	IN
SHEAR MODULUS	165 PSI

Bridge Design Engr	M:\Standards - In Progress\Girders\WF\I GIRDER BEARING DETAILS.MAN				REGION NO.	STATE	FED. AID PROJ. NO.	SHEET NO.	TOTAL SHEETS
Supervisor					10	WASH.			
Designed By					JOB NUMBER				
Checked By									
Detailed By									
Bridge Projects Engr.									
Prelim. Plan By									
Architect/Specialist	DATE	REVISION	BY	APP'D					

Wed Jul 20 10:42:14 2011

BRIDGE AND STRUCTURES OFFICE

Washington State Department of Transportation

STANDARD PRESTRESSED CONCRETE GIRDERS

I GIRDER BEARING DETAILS

BRIDGE SHEET NO.

SHEET OF SHEETS

Last revised on : 7/20/2011

SR FILE NO. SHEET

5.6-A4-21

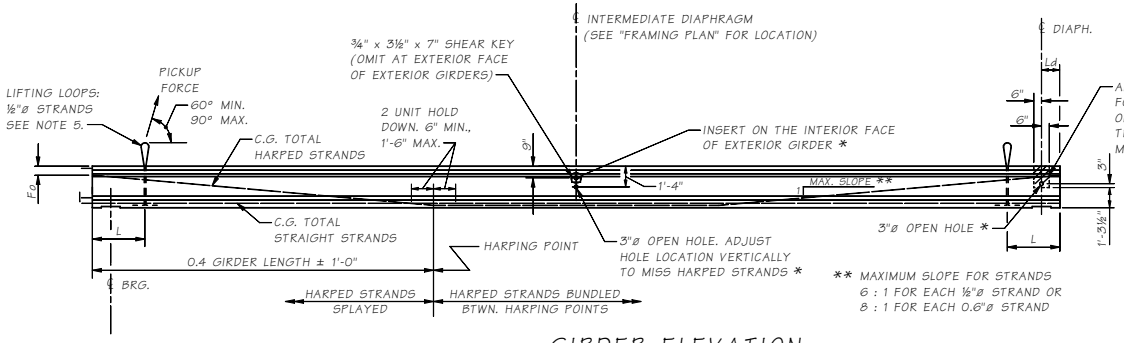

GIRDER ELEVATION

* OMIT HOLES AND PLACE INSERTS ON THE INTERIOR FACE OF EXTERIOR GIRDERS. PLACE HOLES AND INSERTS PARALLEL TO SKEW. INSERTS SHALL BE 1"ø BURKE HI-TENSILE, LANCASTER MALLEABLE, DAYTON-SUPERIOR F-62 FLARED THIN SLAB (1" x 4⅜") FERRULE OR APPROVED EQUAL. (TYP.)

NOTES:

1. PLAN LENGTH SHALL BE INCREASED AS NECESSARY TO COMPENSATE FOR SHORTENING DUE TO PRESTRESS AND SHRINKAGE.
2. ALL PRETENSIONED AND TEMPORARY STRANDS SHALL BE [½"ø OR 0.6"ø] LOW RELAXATION STRANDS (AASHTO M203 GRADE 270.)
3. FOR END TYPES A, C AND D CUT ALL STRANDS FLUSH WITH THE GIRDER ENDS AND PAINT WITH AN APPROVED EPOXY RESIN, EXCEPT FOR EXTENDED STRANDS AS SHOWN. FOR END TYPE B CUT ALL STRANDS 1" BELOW CONCRETE SURFACE AND GROUT WITH AN APPROVED EPOXY GROUT.
4. THE TOP SURFACE OF THE GIRDER FLANGE SHALL BE ROUGHENED IN ACCORDANCE WITH SECTION 6-02.3(25)H OF THE STANDARD SPECIFICATIONS.
5. LIFTING EMBEDMENTS SHALL BE INSTALLED IN ACCORDANCE WITH SECTION 6-02.3(25)L OF THE STANDARD SPECIFICATIONS.
6. CAUTION SHALL BE EXERCISED IN HANDLING AND PLACING GIRDERS. ALL GIRDERS SHALL BE CHECKED BY THE CONTRACTOR TO ENSURE THAT THEY ARE BRACED ADEQUATELY TO PREVENT TIPPING AND TO CONTROL LATERAL BENDING DURING SHIPPING. ONCE ERECTED, ALL GIRDERS SHALL BE BRACED LATERALLY TO PREVENT TIPPING UNTIL THE DIAPHRAGMS ARE CAST AND CURED.
7. FORMS FOR BEARING PAD RECESSES SHALL BE CONSTRUCTED AND FASTENED IN SUCH A MANNER AS TO NOT CAUSE DAMAGE TO THE GIRDER DURING THE STRAND RELEASE OPERATION.
8. TEMPORARY STRANDS SHALL BE EITHER PRETENSIONED OR POST-TENSIONED IN ACCORDANCE WITH SECTION 6-02.3(25)L OF THE STANDARD SPECIFICATIONS. IF PRETENSIONED, THESE TEMPORARY STRANDS SHALL BE UNBONDED OVER ALL BUT THE END 10'-0" OF THE GIRDER LENGTH. AS AN ALTERNATE, TEMPORARY STRANDS MAY BE POST-TENSIONED ON THE SAME DAY THE PRETENSIONING IS RELEASED INTO THE GIRDER.

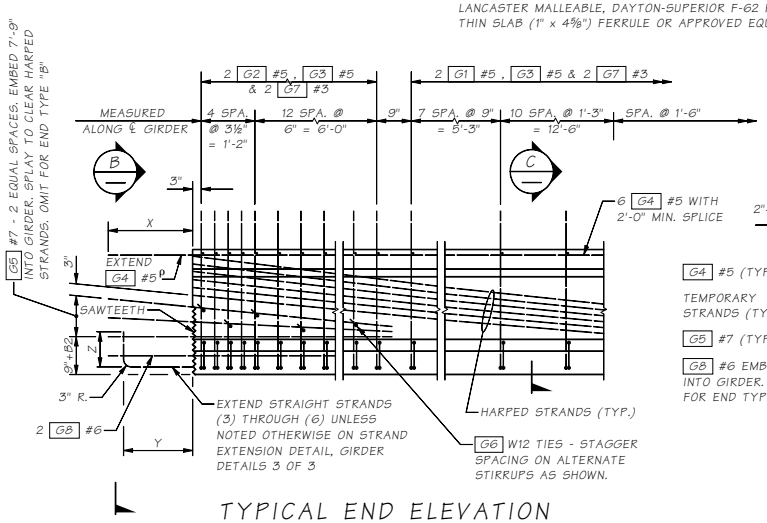

TYPICAL END ELEVATION

END TYPE C SHOWN, OTHER END TYPES SIMILAR

ρ FIELD BENDING REQUIRED TO OBTAIN 1½" CONCRETE COVER AT PAVEMENT SEAT.

(stirrup spacing shall be determined by the designer.)

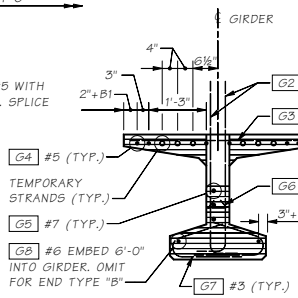

VIEW B

SAWTEETH SHOWN BY HATCHED AREA.

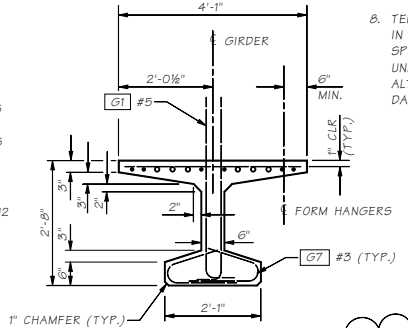

SECTION C

INTERMEDIATE DIAPHRAGM:
1/3 points of span for span lengths 80'-0" to 120'-0"
1/2 points of span for span lengths less than 40'-0" to 80'-0"
No intermediate diaphragm for span lengths 40'-0" or less.

Diaphragm Type	END TYPE	BEARING RECESS	X	Y	Z	SAWTEETH
End Diaph. on Girder	A	YES	1'-10"	1'-6"	9"	YES
"L" Abutment	B	YES	0"	0"	0"	NO
Hinge Diaph. on Interm. Pier	C	NO	1'-10"	1'-6"	9"	YES
Fixed Diaph. @ Interm. Pier	D	NO	1'-10"	ALT. 1 OR ALT. 2 STRAND EXTENSION		YES

FOR END TYPE "C"

ENDS AHEAD ON STATION
G5 BARS LEFT OF ℄
B1 = 0" (G4 , G8)
B2 = 0" (G5)
ENDS BACK ON STATION
G5 BARS RIGHT OF ℄
B1 = 1½"(G4 , G8)
B2 = 3" (G5)

MARK	LOCATION	SIZE	
G1	GIRDER STIRRUPS	5	
G2	GIRDER END STIRRUPS	5	
G3	GIRDER TOP FLANGE	5	STR.
G4	GIRDER LONGIT. FULL LENGTH	5	STR.
G5	GIRDER END LONGIT.	7	STR.
G6	GIRDER END TIES	W12 δ	
G7β	GIRDER BOT. FLANGE TIES	3	
G8	GIRDER END LONGIT.	6	STR.
G9β	GIRDER BOT. FLANGE TIES	3	
G10β	GIRDER BOT. FLANGE TIES	3	

BENDING DIAGRAM (ALL DIMENSIONS ARE OUT TO OUT)

NOTE: FOR DIMENSION "A", SEE "GIRDER SCHEDULE"

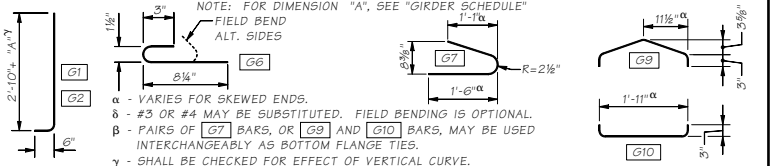

α - VARIES FOR SKEWED ENDS.
δ - #3 OR #4 MAY BE SUBSTITUTED. FIELD BENDING IS OPTIONAL.
β - PAIRS OF G7 BARS, OR G9 AND G10 BARS, MAY BE USED INTERCHANGEABLY AS BOTTOM FLANGE TIES.
γ - SHALL BE CHECKED FOR EFFECT OF VERTICAL CURVE.

Bridge Design Engr.	M:\STANDARDS\Girders\Bulb Tee Girder\W32BTG1.man							
Supervisor								
Designed By								
Checked By								
Detailed By								
Bridge Projects Engr.								
Prelim. Plan By								
Architect/Specialist	DATE	REVISION	BY	APP'D				

REGION NO.	STATE	FED. AID PROJ. NO.	SHEET NO.	TOTAL SHEETS
10	WASH.			
JOB NUMBER				

BRIDGE AND STRUCTURES OFFICE

Washington State Department of Transportation

STANDARD PRESTRESSED CONCRETE GIRDERS

W32BTG GIRDER DETAILS 1 OF 3

BRIDGE SHEET NO. — SHEET — OF — SHEETS

SR ____ JOB NO. ____ SHEET

5.6-A5-1

Thu Sep 02 14:22:44 2010

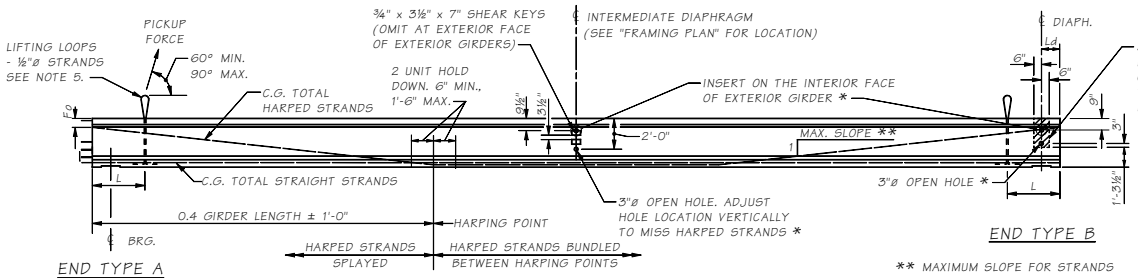

GIRDER ELEVATION

* OMIT HOLES AND PLACE INSERTS ON THE INTERIOR FACE OF EXTERIOR GIRDERS. PLACE HOLES AND INSERTS PARALLEL TO SKEW. INSERTS SHALL BE 1"ø BURKE HI-TENSILE, LANCASTER MALLEABLE, DAYTON-SUPERIOR F-62 FLARED THIN SLAB (1" x 4⅝") FERRULE OR APPROVED EQUAL. (TYP.)

** MAXIMUM SLOPE FOR STRANDS
6 : 1 FOR EACH ½"ø STRAND OR
8 : 1 FOR EACH 0.6"ø STRAND

NOTES:

1. PLAN LENGTH SHALL BE INCREASED AS NECESSARY TO COMPENSATE FOR SHORTENING DUE TO PRESTRESS AND SHRINKAGE.
2. ALL PRETENSIONED AND TEMPORARY STRANDS SHALL BE [½"ø OR 0.6"ø] LOW RELAXATION STRANDS (AASHTO M203 GRADE 270.)
3. FOR END TYPES A, C AND D CUT ALL STRANDS FLUSH WITH THE GIRDER ENDS AND PAINT WITH AN APPROVED EPOXY RESIN, EXCEPT FOR EXTENDED STRANDS AS SHOWN. FOR END TYPE B CUT ALL STRANDS 1" BELOW CONCRETE SURFACE AND GROUT WITH AN APPROVED EPOXY GROUT.
4. THE TOP SURFACE OF THE GIRDER FLANGE SHALL BE ROUGHENED IN ACCORDANCE WITH SECTION 6-02.3(25)H OF THE STANDARD SPECIFICATIONS.
5. LIFTING EMBEDMENTS SHALL BE INSTALLED IN ACCORDANCE WITH SECTION 6-02.3(25)L OF THE STANDARD SPECIFICATIONS.
6. CAUTION SHALL BE EXERCISED IN HANDLING AND PLACING GIRDERS. ALL GIRDERS SHALL BE CHECKED BY THE CONTRACTOR TO ENSURE THAT THEY ARE BRACED ADEQUATELY TO PREVENT TIPPING AND TO CONTROL LATERAL BENDING DURING SHIPPING. ONCE ERECTED, ALL GIRDERS SHALL BE BRACED LATERALLY TO PREVENT TIPPING UNTIL THE DIAPHRAGMS ARE CAST AND CURED.
7. FORMS FOR BEARING PAD RECESSES SHALL BE CONSTRUCTED AND FASTENED IN SUCH A MANNER AS TO NOT CAUSE DAMAGE TO THE GIRDER DURING THE STRAND RELEASE OPERATION.
8. TEMPORARY STRANDS SHALL BE EITHER PRETENSIONED OR POST-TENSIONED IN ACCORDANCE WITH SECTION 6-02.3(25)L OF THE STANDARD SPECIFICATIONS. IF PRETENSIONED, THESE TEMPORARY STRANDS SHALL BE UNBONDED OVER ALL BUT THE END 10'-0" OF THE GIRDER LENGTH. AS AN ALTERNATE, TEMPORARY STRANDS MAY BE POST-TENSIONED ON THE SAME DAY THE PRETENSIONING IS RELEASED INTO THE GIRDER.

INTERMEDIATE DIAPHRAGM:
1/3 points of span for span lengths 80'-0" to 120'-0"
1/2 points of span for span lengths less than 40'-0" to 80'-0"
No intermediate diaphragm for span lengths 40'-0" or less.

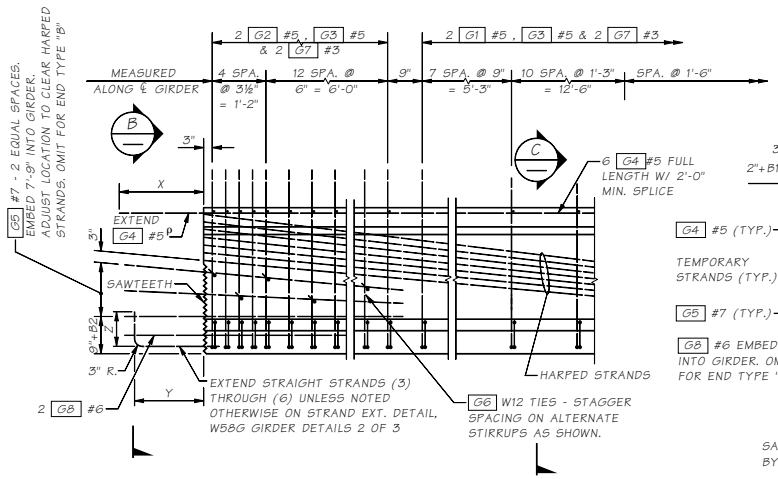

TYPICAL END ELEVATION

END TYPE C SHOWN, OTHER END TYPES SIMILAR

ρ FIELD BENDING REQUIRED TO OBTAIN 1½" CONCRETE COVER AT PAVEMENT SEAT.

(stirrup spacing shall be determined by the designer)

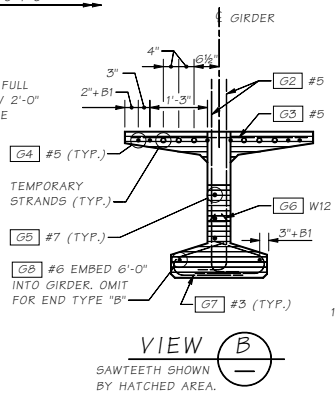

VIEW B

SAWTEETH SHOWN BY HATCHED AREA.

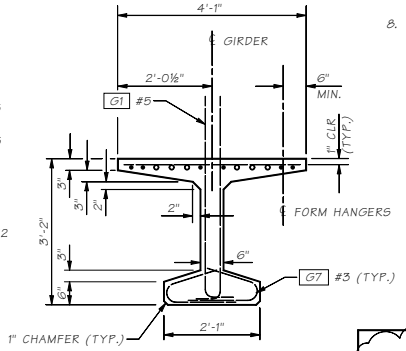

SECTION C

Diaphragm Type	END TYPE	BEARING RECESS	X	Y	Z	SAWTEETH
End Diaph. on Girder	A	YES	1'-10"	1'-6"	9"	YES
"L" Abutment	B	YES	0"	0"	0"	NO
Hinge Diaph. on Interm. Pier	C	NO	1'-10"	1'-6"	9"	YES
Fixed Diaph. @ Interm. Pier	D	NO	1'-10"	ALT. 1 OR ALT. 2 STRAND EXTENSION		YES

FOR END TYPE "C"

ENDS AHEAD ON STATION
G5 BARS LEFT OF ℄
B1 = 0" (G4 , G8)
B2 = 0" (G5)
ENDS BACK ON STATION
G5 BARS RIGHT OF ℄
B1 = 1½"(G4 , G8)
B2 = 3" (G5)

MARK	LOCATION	SIZE	
G1	GIRDER STIRRUPS	5	
G2	GIRDER END STIRRUPS	5	
G3	GIRDER TOP FLANGE	5	STR.
G4	GIRDER LONGIT. FULL LENGTH	5	STR.
G5	GIRDER END LONGIT.	7	STR.
G6	GIRDER END TIES	W12 δ	
G7β	GIRDER BOT. FLANGE TIES	3	
G8	GIRDER END LONGIT.	6	STR.
G9β	GIRDER BOT. FLANGE TIES	3	
G10β	GIRDER BOT. FLANGE TIES	3	

BENDING DIAGRAM (ALL DIMENSIONS ARE OUT TO OUT)

NOTE: FOR DIMENSION "A", SEE "GIRDER SCHEDULE"

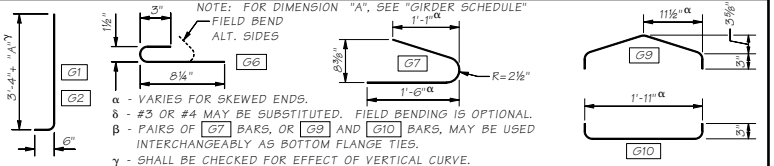

α - VARIES FOR SKEWED ENDS.
δ - #3 OR #4 MAY BE SUBSTITUTED. FIELD BENDING IS OPTIONAL.
β - PAIRS OF G7 BARS, OR G9 AND G10 BARS, MAY BE USED INTERCHANGEABLY AS BOTTOM FLANGE TIES.
γ - SHALL BE CHECKED FOR EFFECT OF VERTICAL CURVE.

Bridge Design Engr.	M:\STANDARDS\Girders\Bulb Tee Girder\W38BTG1.man							
Supervisor				REGION NO.	STATE	FED. AID PROJ. NO.	SHEET NO.	TOTAL SHEETS
Designed By				10	WASH.			
Checked By				JOB NUMBER				
Detailed By								
Bridge Projects Engr.								
Prelim. Plan By								
Architect/Specialist	DATE	REVISION	BY	APP'D				

BRIDGE AND STRUCTURES OFFICE

Washington State Department of Transportation

STANDARD PRESTRESSED CONCRETE GIRDERS

W38BTG GIRDER DETAILS 1 OF 3

BRIDGE SHEET NO. — SHEET — OF — SHEETS

SR — JOB NO. — SHEET

5.6-A5-2

Thu Sep 02 14:22:49 2010

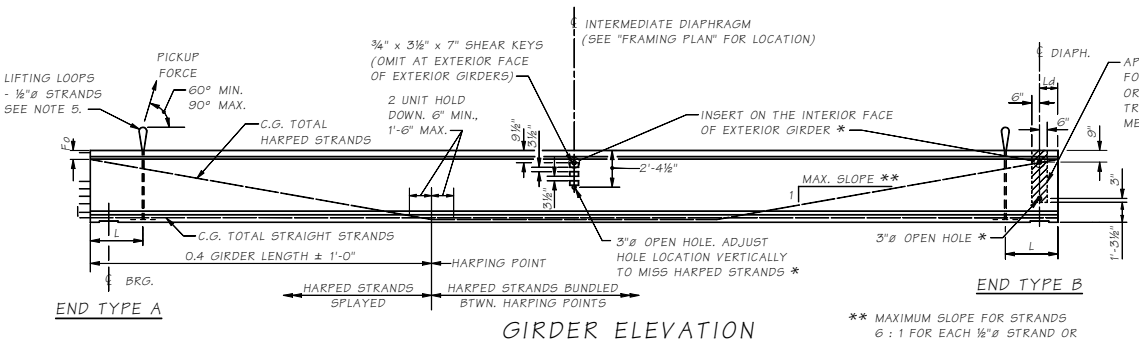

GIRDER ELEVATION

* OMIT HOLES AND PLACE INSERTS ON THE INTERIOR FACE OF EXTERIOR GIRDERS. PLACE HOLES AND INSERTS PARALLEL TO SKEW. INSERTS SHALL BE 1"ø BURKE HI-TENSILE, LANCASTER MALLEABLE, DAYTON-SUPERIOR F-62 FLARED THIN SLAB (1" x 4⅝") FERRULE OR APPROVED EQUAL. (TYP.)

** MAXIMUM SLOPE FOR STRANDS
6 : 1 FOR EACH ½"ø STRAND OR
8 : 1 FOR EACH 0.6"ø STRAND

NOTES:

1. PLAN LENGTH SHALL BE INCREASED AS NECESSARY TO COMPENSATE FOR SHORTENING DUE TO PRESTRESS AND SHRINKAGE.
2. ALL PRETENSIONED AND TEMPORARY STRANDS SHALL BE [½"ø OR 0.6"ø] LOW RELAXATION STRANDS (AASHTO M203 GRADE 270.)
3. FOR END TYPES A, C AND D CUT ALL STRANDS FLUSH WITH THE GIRDER ENDS AND PAINT WITH AN APPROVED EPOXY RESIN, EXCEPT FOR EXTENDED STRANDS AS SHOWN. FOR END TYPE B CUT ALL STRANDS 1" BELOW CONCRETE SURFACE AND GROUT WITH AN APPROVED EPOXY GROUT.
4. THE TOP SURFACE OF THE GIRDER FLANGE SHALL BE ROUGHENED IN ACCORDANCE WITH SECTION 6-02.3(25)H OF THE STANDARD SPECIFICATIONS.
5. LIFTING EMBEDMENTS SHALL BE INSTALLED IN ACCORDANCE WITH SECTION 6-02.3(25)L OF THE STANDARD SPECIFICATIONS.
6. CAUTION SHALL BE EXERCISED IN HANDLING AND PLACING GIRDERS. ALL GIRDERS SHALL BE CHECKED BY THE CONTRACTOR TO ENSURE THAT THEY ARE BRACED ADEQUATELY TO PREVENT TIPPING AND TO CONTROL LATERAL BENDING DURING SHIPPING. ONCE ERECTED, ALL GIRDERS SHALL BE BRACED LATERALLY TO PREVENT TIPPING UNTIL THE DIAPHRAGMS ARE CAST AND CURED.
7. FORMS FOR BEARING PAD RECESSES SHALL BE CONSTRUCTED AND FASTENED IN SUCH A MANNER AS TO NOT CAUSE DAMAGE TO THE GIRDER DURING THE STRAND RELEASE OPERATION.
8. TEMPORARY STRANDS SHALL BE EITHER PRETENSIONED OR POST-TENSIONED IN ACCORDANCE WITH SECTION 6-02.3(25)L OF THE STANDARD SPECIFICATIONS. IF PRETENSIONED, THESE TEMPORARY STRANDS SHALL BE UNBONDED OVER ALL BUT THE END 10'-0" OF THE GIRDER LENGTH. AS AN ALTERNATE, TEMPORARY STRANDS MAY BE POST-TENSIONED ON THE SAME DAY THE PRETENSIONING IS RELEASED INTO THE GIRDER.

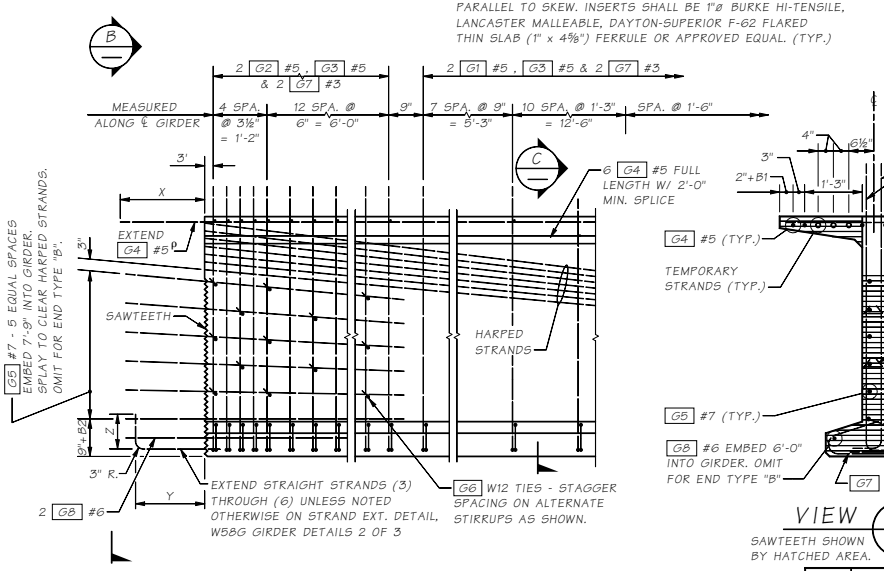

TYPICAL END ELEVATION

END TYPE C SHOWN, OTHER END TYPES SIMILAR

ρ FIELD BENDING REQUIRED TO OBTAIN 1½" CONCRETE COVER AT PAVEMENT SEAT.

(stirrup spacing shall be determined by the designer)

VIEW B

SAWTEETH SHOWN BY HATCHED AREA.

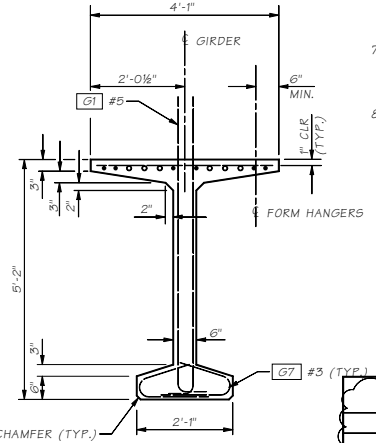

SECTION C

INTERMEDIATE DIAPHRAGM:
1/4 POINTS OF SPAN FOR SPAN LENGTHS 120'-0" TO 160'-0".
1/3 POINTS OF SPAN FOR SPAN LENGTHS 80'-0" TO 120'-0".
1/2 POINT OF SPAN FOR SPAN LENGTHS 40'-0" TO 80'-0".

Diaphragm Type	END TYPE	BEARING RECESS	X	Y	Z	SAWTEETH
End Diaph. on Girder	A	YES	1'-10"	1'-6"	9"	YES
"L" Abutment	B	YES	0"	0"	0"	NO
Hinge Diaph. on Interm. Pier	C	NO	1'-10"	1'-6"	9"	YES
Fixed Diaph. @ Interm. Pier	D	NO	1'-10"	ALT. 1 OR ALT. 2 STRAND EXTENSION		YES

FOR END TYPE "C"

ENDS AHEAD ON STATION
G5 BARS LEFT OF ℄
B1 = 0" (G4 , G8)
B2 = 0" (G5)
ENDS BACK ON STATION
G5 BARS RIGHT OF ℄
B1 = 1½"(G4 , G8)
B2 = 3" (G5)

MARK	LOCATION	SIZE	
G1	GIRDER STIRRUPS	5	
G2	GIRDER END STIRRUPS	5	
G3	GIRDER TOP FLANGE	5	STR.
G4	GIRDER LONGIT. FULL LENGTH	5	STR.
G5	GIRDER END LONGIT.	7	STR.
G6	GIRDER END TIES	W12 δ	
G7β	GIRDER BOT. FLANGE TIES	3	
G8	GIRDER END LONGIT.	6	STR.
G9β	GIRDER BOT. FLANGE TIES	3	
G10β	GIRDER BOT. FLANGE TIES	3	

BENDING DIAGRAM (ALL DIMENSIONS ARE OUT TO OUT)
NOTE: FOR DIMENSION "A", SEE "GIRDER SCHEDULE"

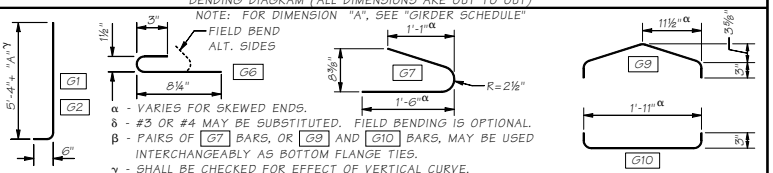

α - VARIES FOR SKEWED ENDS.
δ - #3 OR #4 MAY BE SUBSTITUTED. FIELD BENDING IS OPTIONAL.
β - PAIRS OF G7 BARS, OR G9 AND G10 BARS, MAY BE USED INTERCHANGEABLY AS BOTTOM FLANGE TIES.
γ - SHALL BE CHECKED FOR EFFECT OF VERTICAL CURVE.

Bridge Design Engr.	M:\STANDARDS\Girders\Bulb Tee Girder\W62BTG1.man							
Supervisor				REGION NO.	STATE	FED. AID PROJ. NO.	SHEET NO.	TOTAL SHEETS
Designed By				10	WASH.			
Checked By				JOB NUMBER				
Detailed By								
Bridge Projects Engr.								
Prelim. Plan By								
Architect/Specialist	DATE	REVISION	BY	APP'D				

BRIDGE AND STRUCTURES OFFICE

Washington State Department of Transportation

STANDARD PRESTRESSED CONCRETE GIRDERS

W62BTG GIRDER DETAILS 1 OF 3

BRIDGE SHEET NO. SHEET OF SHEETS

SR JOB NO. SHEET 5.6-A5-3

Thu Sep 02 14:22:54 2010

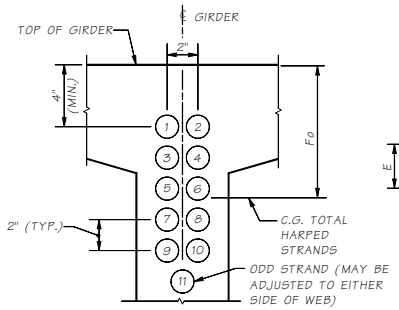

STRAND PATTERN AT GIRDER END

HARPED STRAND LOCATION SEQUENCE SHALL BE AS SHOWN (1), (2) ETC.

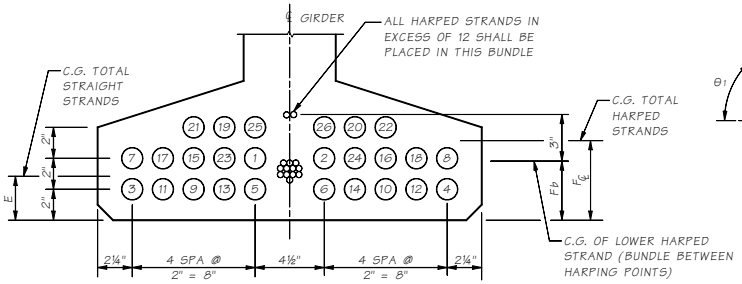

STRAND PATTERN AT ℄ SPAN

STRAIGHT STRAND LOCATION SEQUENCE SHALL BE AS SHOWN (1), (2) ETC.

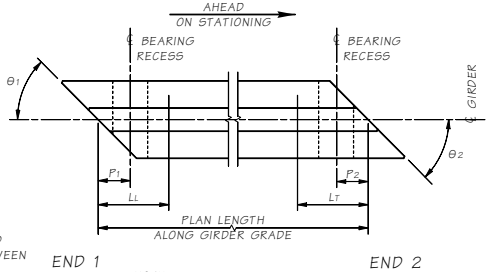

NOTE:
L1 AND LT ARE SHIPPING SUPPORT LOCATIONS AT LEADING AND TRAILING ENDS, RESPECTIVELY.

GIRDER SCHEDULE

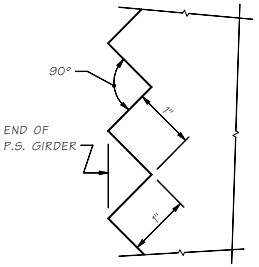

SAWTOOTH DETAILS

SAWTEETH ARE FULL WIDTH - USE SAWTOOTH KEYS FROM BOTTOM OF BOTTOM FLANGE TO BOTTOM OF LOWEST HARPED STRAND AS WELL AS TOP FLANGE ADJACENT TO HARPED STRANDS AS SHOWN IN VIEW B - GIRDER DETAILS 1 OF 2

DIMENSION "A" AT ℄ BEARINGS = — BASED ON GIRDER DEFLECTION = "D" AT TIME OF SLAB PLACEMENT (120 DAYS)

SPAN	GIRDER	END 1 TYPE	END 2 TYPE	L	L1	LT	θ1 (DEG.)	θ2 (DEG.)	P1	P2	PLAN LENGTH (ALONG GIRDER GRADE)	MIN. CONC. COMP. STRENGTH @ FINAL F'C (KSI)	MIN. CONC. COMP. STRENGTH @ RELEASE F'CI (KSI)	HARPED NO. OF STRANDS	HARPED JACKING FORCE (KIPS)	STRAIGHT NO. OF STRANDS	STRAIGHT JACKING FORCE (KIPS)	LOCATION OF C.G. STRANDS E	LOCATION OF C.G. STRANDS F℄	LOCATION OF C.G. STRANDS Fb	LOCATION OF C.G. STRANDS Fo	C	D @ 40 DAYS	D @ 120 DAYS	Ld
-	-	-	-	-	-	-	-	-	-	-	-	-	-	-	-	-	-	-	-	-	-	-	-	-	-
-	-	-	-	-	-	-	-	-	-	-	-	-	-	-	-	-	-	-	-	-	-	-	-	-	-

The number of harped strands should not exceed ½ of the number of straight strands.

NOTE:
Dimensions shall be shown in imperial units to the nearest ⅛".

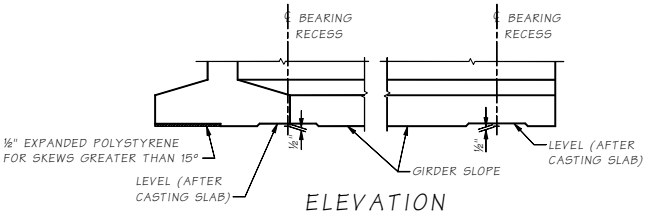

ELEVATION

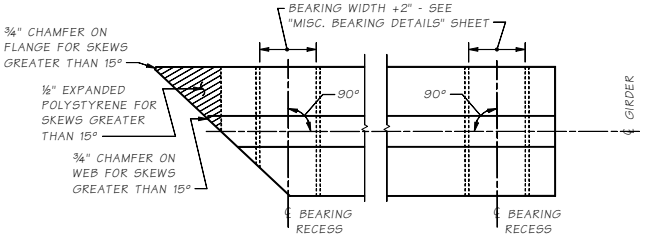

PLAN
BEARING RECESS AND BOTTOM FLANGE SPALL PROTECTION

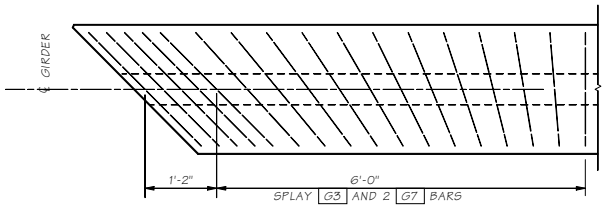

TRANSVERSE REINFORCING SKEWED ENDS

ONLY TRANSVERSE REINF. SHOWN

Bridge Design Engr.	M:\STANDARDS\Girders\Bulb Tee Girder\GIRDER DETAILS 2 OF 3.MAN				REGION NO.	STATE	FED. AID PROJ. NO.	SHEET NO.	TOTAL SHEETS
Supervisor					10	WASH.			
Designed By					JOB NUMBER				
Checked By									
Detailed By									
Bridge Projects Engr.									
Prelim. Plan By									
Architect/Specialist	DATE	REVISION	BY	APP'D					

Thu Sep 02 14:22:59 2010

BRIDGE AND STRUCTURES OFFICE

Washington State Department of Transportation

STANDARD PRESTRESSED CONCRETE GIRDERS

BULB TEE GIRDER DETAILS 2 OF 3

BRIDGE SHEET NO. — SHEET OF SHEETS

SR — JOB NO. — SHEET

5.6-A5-4

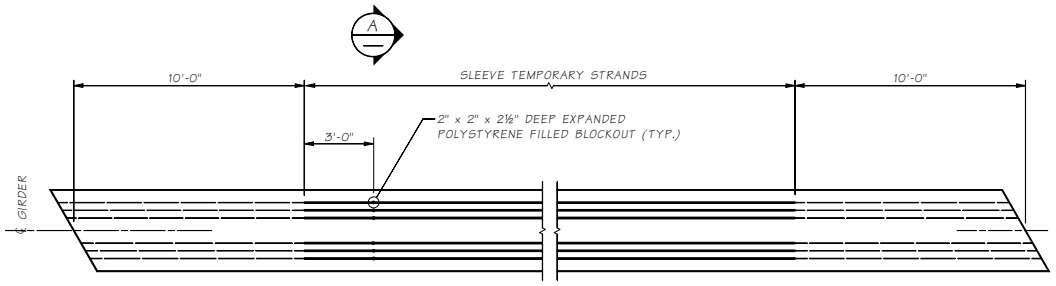

PLAN
PRETENSIONED TEMPORARY TOP STRANDS

POST-TENSIONED TEMPORARY TOP STRANDS SIMILAR, EXCEPT 10'-0" LENGTH OF BONDING OCCURS AT ONE END ONLY. THE OPPOSING END IS ANCHORED WITH PLATES AND STRAND CHUCKS. SEE "GIRDER SCHEDULE" FOR NUMBER OF TEMPORARY STRANDS REQUIRED.

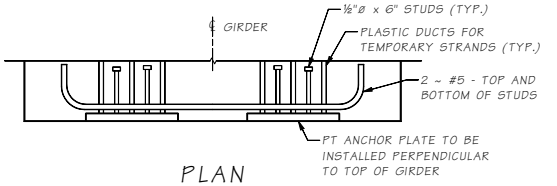

PLAN
TEMPORARY STRAND POST-TENSIONED ALTERNATE

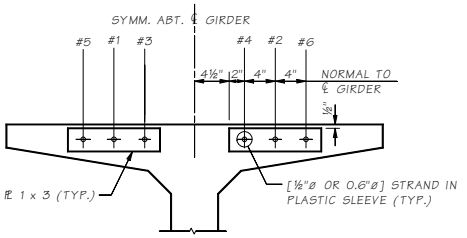

END VIEW
TEMPORARY STRAND POST-TENSIONED ALTERNATE

ADJUST G4 BARS TO CLEAR THE STEEL PLATE

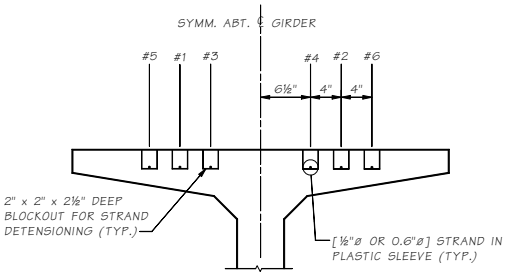

SECTION A

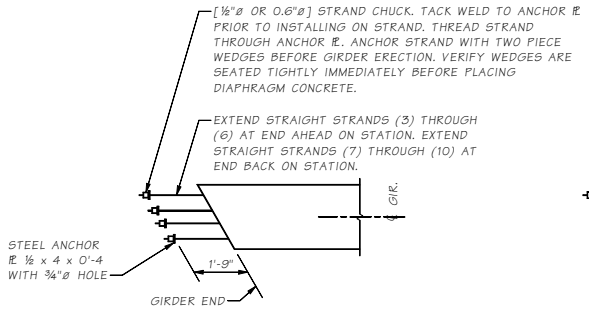

ALTERNATE #1

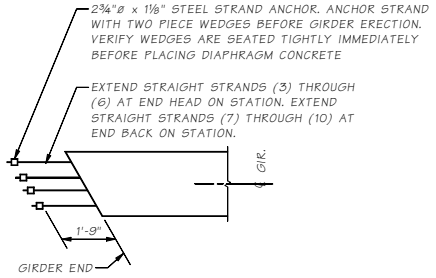

ALTERNATE #2

STRAND EXTENSION DETAIL

Number of extended strands shall be determined by the designer.

Bridge Design Engr.	M:\STANDARDS\Girders\Bulb Tee Girder\GIRDER DETAILS 3 OF 3.MAN				REGION NO.	STATE	FED. AID PROJ. NO.	SHEET NO.	TOTAL SHEETS
Supervisor					10	WASH.			
Designed By					JOB NUMBER				
Checked By									
Detailed By									
Bridge Projects Engr.									
Prelim. Plan By									
Architect/Specialist	DATE	REVISION	BY	APP'D					

Thu Sep 02 14:23:03 2010

BRIDGE AND STRUCTURES OFFICE

Washington State Department of Transportation

STANDARDS
PRESTRESSED CONCRETE GIRDERS

BULB TEE GIRDER
DETAILS 3 OF 3

BRIDGE SHEET NO. / SHEET / OF / SHEETS

SR JOB NO. SHEET

5.6-A5-5

GIRDER SCHEDULE

SPAN	GIRDER	GIRDER SERIES	END 1 TYPE	END 2 TYPE	B (FT-IN)	L (FT-IN)	LL (FT-IN)	LT (FT-IN)	θ1 (DEG.)	θ2 (DEG.)	P1 (FT-IN)	P2 (FT-IN)	PLAN LENGTH (ALONG GIRDER GRADE) (FT-IN)	MIN. CONC. COMP. STRENGTH @ 28-DAYS F'C (KSI)	MIN. CONC. COMP. STRENGTH @ RELEASE F'CI (KSI)	NUMBER OF STRAIGHT STRANDS	NUMBER OF HARPED STRANDS	LOCATION OF C.G. STRANDS E (IN)	LOCATION OF C.G. STRANDS F℄ (IN)	LOCATION OF C.G. STRANDS Fo (IN)	STRAIGHT STR. TO EXTEND END 1	STRAIGHT STR. TO EXTEND END 2	D @ 120 DAYS (IN) (D120)	REINFORCEMENT DETAILS V1	V2 (IN)	V3	V4 (IN)	V5	V6 (IN)
-	-	-	-	-	-	-	-	-	-	-	-	-	-	-	-	-	-	-	-	-	(F) TO (F)	(F) TO (F)	-	-	-	-	-	-	-
-	-	-	-	-	-	-	-	-	-	-	-	-	-	-	-	-	-	-	-	-	-	-	-	-	-	-	-	-	-

NOTES TO DESIGNER:

1. DG GIRDER DETAIL SHEETS 1 TO 2 ARE INTENDED TO BE USED AS IS WITHOUT NEED FOR MODIFICATION FOR MOST PROJECTS. PROJECT SPECIFIC GIRDER DETAILS ARE THEN LIMITED TO THE GIRDER SCHEDULE.
2. V1 SPA. @ V2 IS INTENDED TO BE THE SPLITTING RESISTANCE ZONE DEFINED BY BDM 5.6.2.F.
3. V3 SPA. @ V4 IS INTENDED TO BE THE CONFINEMENT REINFORCEMENT ZONE DEFINED BY BDM 5.6.2.G.
4. GIRDER END SKEW IS LIMITED TO 30°.
5. DIMENSIONS IN THE GIRDER SCHEDULE SHALL BE SHOWN TO THE NEAREST ⅛TH INCH.
6. THE NUMBER OF HARPED STRANDS SHOULD NOT EXCEED HALF THE NUMBER OF STRAIGHT STRANDS UNLESS THE STRAIGHT STRAND PATTERN IS FULL.
7. IT IS ASSUMED THAT THE FINAL PROFILE GRADE IS PROVIDED BY VARYING THE OVERLAY THICKNESS. INSTEAD, THE DESIGNER COULD ADD A "GIRDER FLANGE THICKENING" DETAIL TO ACCOUNT FOR PROFILE GRADE AND PRESTRESSING CAMBER EFFECTS.
8. THIS STANDARD IS BASED ON THE USE OF AN HMA OVERLAY. USE OF A 5" CIP CONCRETE DECK REQUIRES MODIFICATIONS.

GIRDER NOTES

1. PLAN LENGTH SHALL BE INCREASED AS NECESSARY TO COMPENSATE FOR SHORTENING DUE TO PRESTRESS AND SHRINKAGE.
2. ALL PRETENSIONED STRANDS SHALL BE 0.6"ø AASHTO M203 GRADE 270 LOW RELAXATION STRANDS, JACKED TO 202.5 KSI.
3. CUT ALL STRANDS FLUSH WITH THE GIRDER ENDS AND PAINT WITH AN APPROVED EPOXY RESIN, EXCEPT FOR EXTENDED STRANDS AS SHOWN.
4. THE TOP SURFACE OF THE GIRDER FLANGE SHALL BE FINISHED IN ACCORDANCE WITH SECTION 6-02.3(25)H OF THE STANDARD SPECIFICATIONS.
5. LIFTING EMBEDMENTS SHALL BE INSTALLED IN ACCORDANCE WITH SECTION 6-02.3(25)L OF THE STANDARD SPECIFICATIONS. AFTER ERECTION, CUT OFF LIFTING EMBEDMENTS 1 INCH BELOW THE TOP OF THE FLANGE AND FILL WITH AN APPROVED GROUT.
6. CAUTION SHALL BE EXERCISED IN HANDLING AND PLACING GIRDERS. ALL GIRDERS SHALL BE CHECKED BY THE CONTRACTOR TO ENSURE THAT THEY ARE BRACED ADEQUATELY TO PREVENT TIPPING AND TO CONTROL LATERAL BENDING DURING SHIPPING. ONCE ERECTED, ALL GIRDERS SHALL BE BRACED LATERALLY TO PREVENT TIPPING UNTIL THE DIAPHRAGMS ARE CAST AND CURED.
7. FORMS FOR BEARING PAD RECESSES SHALL BE CONSTRUCTED AND FASTENED IN SUCH A MANNER AS TO NOT CAUSE DAMAGE TO THE GIRDER DURING THE STRAND RELEASE OPERATION.
8. STRUCTURAL STEEL SHAPES AND ASSEMBLIES SHALL BE ASTM A36. THEY SHALL BE PAINTED WITH A PRIMER COAT IN ACCORDANCE WITH STD. SPEC. 6-07.3(9). WELD TIES SHALL BE PAINTED WITH A FIELD PRIMER COAT OF AN ORGANIC ZINC PAINT AFTER FIELD WELDING.
9. FOR DIAPHRAGMS, OMIT HOLES AND PLACE INSERTS ON THE INTERIOR FACE OF EXTERIOR GIRDERS. PLACE HOLES AND INSERTS PARALLEL TO SKEW. INSERTS SHALL BE 1"ø MEADOWBURKE MX-3 HI-TENSILE, 1"ø x 5⅛" WILLIAMS F22 OPEN FERRULE INSERT, 1"ø x 4⅝" DAYTON-SUPERIOR F-62 FLARED THIN SLAB FERRULE INSERT OR APPROVED EQUAL.
10. DEFORMED WELDED WIRE REINFORCEMENT CONFORMING TO SECTION 9-07.7 WITH DEFORMED WIRE CONFORMING TO SECTION 9-07.8 MAY BE SUBSTITUTED FOR MILD STEEL REINFORCEMENT IF AASHTO LRFD BRIDGE DESIGN SPECIFICATION REQUIREMENTS (INCLUDING DEVELOPMENT AND ANCHORAGE) ARE MET. WELDED WIRE REINFORCEMENT SHALL HAVE THE SAME AREA AND SPACING AS THE MILD STEEL REINFORCEMENT THAT IT REPLACES AND THE YIELD STRENGTH SHALL BE GREATER THAN OR EQUAL TO 60 KSI. SHEAR STIRRUP LONGITUDINAL WIRES AND TACK WELDS SHALL BE EXCLUDED FROM GIRDER WEBS. LONGITUDINAL WIRES FOR ANCHORAGE OF WELDED WIRE REINFORCEMENT SHALL HAVE AN AREA OF 40% OR MORE OF THE AREA OF THE WIRE BEING ANCHORED BUT SHALL NOT BE LESS THAN D4.

Last revised on : 6/22/2011

LRFD SR

5.6-A6-1

Bridge Design Engr:	M:\Standards - In Progress\Girders\DECK BULB TEE\SCHEDULE AND NOTES.MAN								BRIDGE AND STRUCTURES OFFICE	Washington State Department of Transportation	STANDARD PRESTRESSED CONCRETE GIRDERS	BRIDGE SHEET NO.
Supervisor					REGION NO.	STATE	FED. AID PROJ. NO.	SHEET NO.	TOTAL SHEETS			
Designed By					10	WASH.						SHEET
Checked By												
Detailed By					JOB NUMBER						DECK BULB TEE GIRDER GIRDER SCHEDULE	OF
Bridge Projects Engr:												
Prelim. Plan By												SHEETS
Architect/Specialist	DATE	REVISION	BY	APP'D								

Wed Jul 20 13:39:41 2011

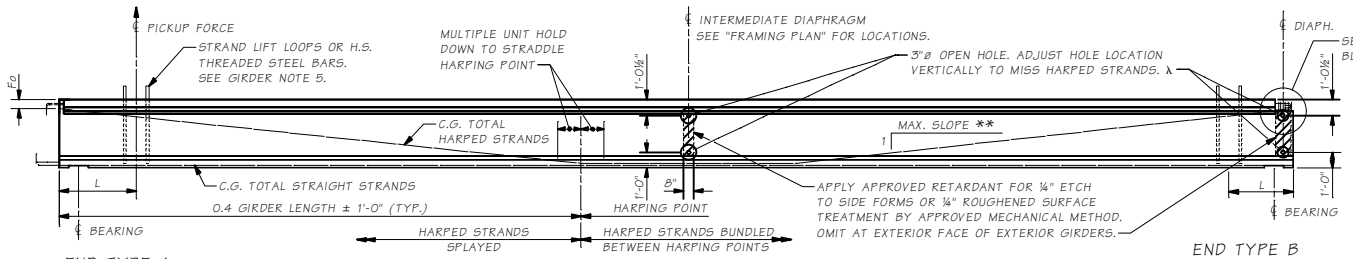

GIRDER ELEVATION

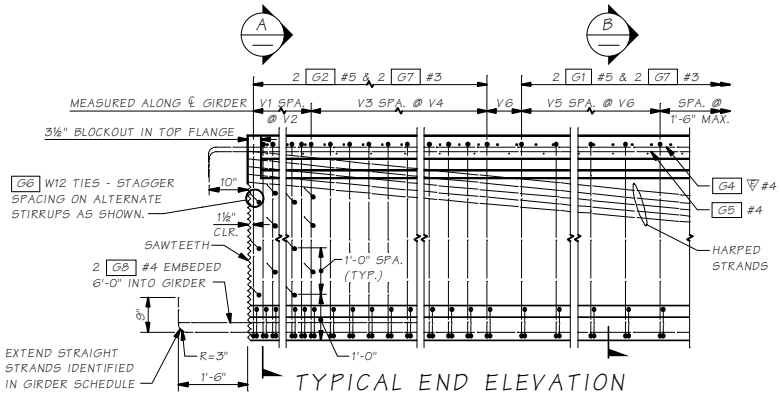

TYPICAL END ELEVATION

END TYPE A SHOWN, END TYPE B SIMILAR.
W53DG SHOWN, OTHER SERIES SIMILAR.

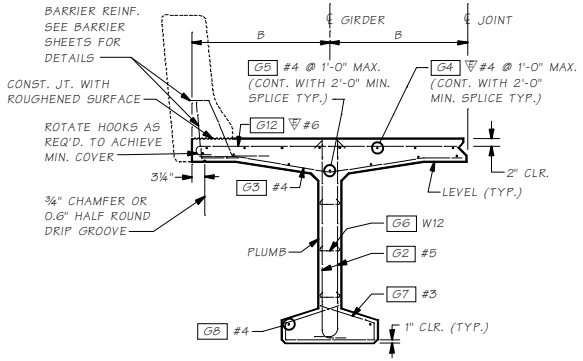

SECTION A

EXT. GIRDER SHOWN
INT. GIRDER SIMILAR
W53DG SHOWN, OTHER SERIES SIMILAR.

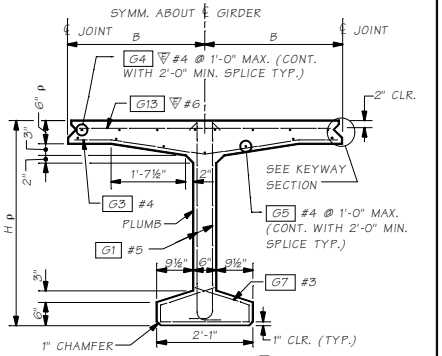

SECTION B

INT. GIRDER SHOWN
EXT. GIRDER SIMILAR
W53DG SHOWN, OTHER SERIES SIMILAR.

END TYPE B BLOCKOUT

DIMENSIONS ARE NORMAL TO DIAPHRAGM.
OTHER REINFORCEMENT NOT SHOWN FOR CLARITY.

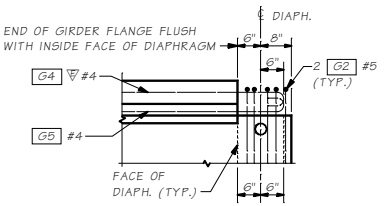

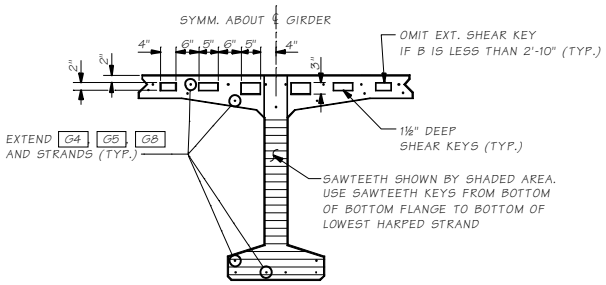

GIRDER END

FOR END TYPE A ONLY

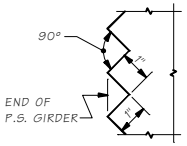

SAWTEETH DETAILS

SAWTEETH ARE FULL WIDTH

GIRDER SERIES	H GIRDER HEIGHT
W35DG	2'-11"
W41DG	3'-5"
W53DG	4'-5"
W65DG	5'-5"

** B : 1 MAXIMUM SLOPE FOR EACH HARPED STRAND

λ SEE GIRDER NOTE 9.

ρ THICKEN FLANGE TO COMPENSATE FOR SUPERELEVATION.

▽ DENOTES EPOXY COATED

BENDING DIAGRAM (ALL DIMENSIONS ARE OUT TO OUT)

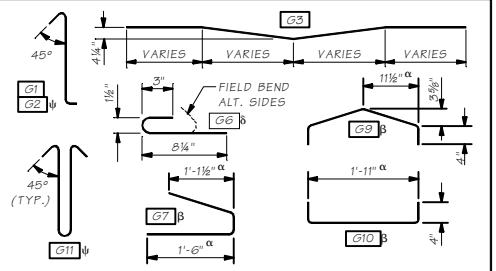

α - VARIES FOR SKEWED ENDS.
δ - #3 OR #4 MAY BE SUBSTITUTED. FIELD BENDING IS OPTIONAL.
β - PAIRS OF G7 BARS, OR G9 AND G10 BARS, MAY BE USED INTERCHANGEABLY AS BOTTOM FLANGE TIES.
ψ - 1 G11 MAY BE SUBSTITUTED FOR 2 G2 WITHIN THE V1 SPA. @ V2.

Bridge Design Engr.	M:\Standards - In Progress\Girders\DECK BULB TEE\DETAILS 1 OF 2.MAN				REGION NO.	STATE	FED. AID PROJ. NO.	SHEET NO.	TOTAL SHEETS
Supervisor					10	WASH.			
Designed By					JOB NUMBER				
Checked By									
Detailed By									
Bridge Projects Engr.									
Prelim. Plan By									
Architect/Specialist	DATE	REVISION	BY	APPD					

Wed Jul 20 15:59:42 2011

BRIDGE AND STRUCTURES OFFICE

Washington State Department of Transportation

STANDARD PRESTRESSED CONCRETE GIRDERS

DECK BULB TEE GIRDER DETAILS 1 OF 2

BRIDGE SHEET NO.

SHEET OF SHEETS

Last revised on : 06/22/2011

SHEET

FILE NO.

SR 5.6-A6-2

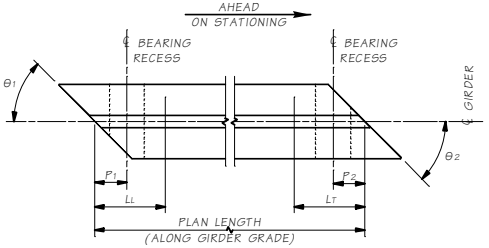

GIRDER SCHEDULE LEGEND

LL AND LT ARE SHIPPING SUPPORT LOCATIONS AT LEADING AND TRAILING ENDS, RESPECTIVELY.

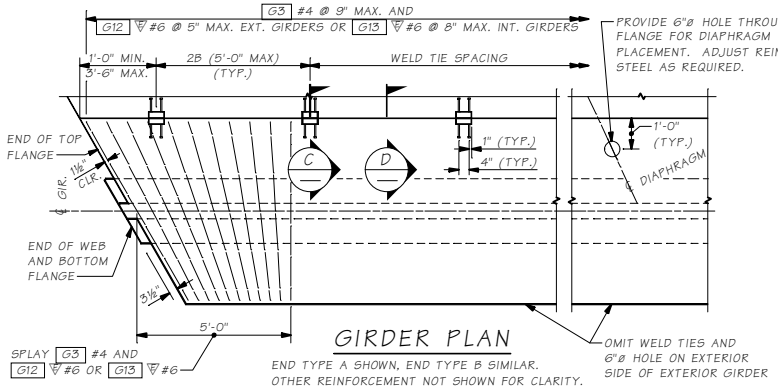

GIRDER PLAN

END TYPE A SHOWN, END TYPE B SIMILAR.
OTHER REINFORCEMENT NOT SHOWN FOR CLARITY.

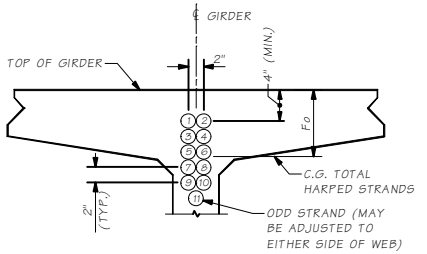

STRAND PATTERN AT GIRDER END

HARPED STRAND LOCATION SEQUENCE SHALL BE AS SHOWN (1), (2) ETC.

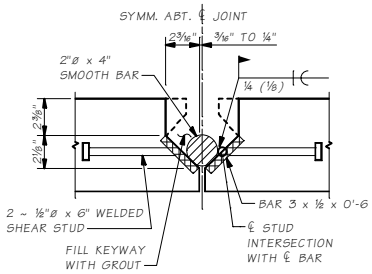

ALTERNATE 1

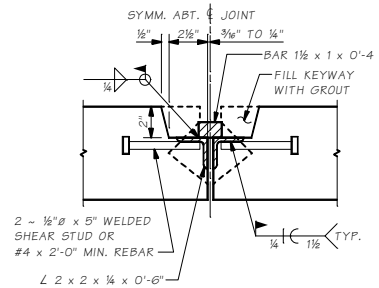

ALTERNATE 2

SECTION C — WELD TIE

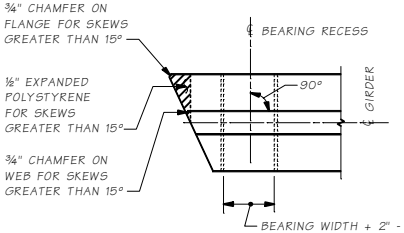

PLAN

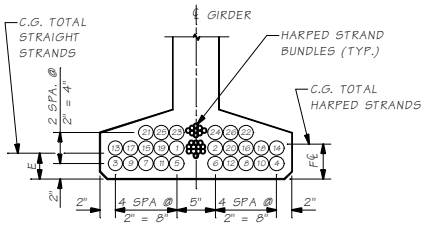

STRAND PATTERN AT ℄ SPAN

STRAIGHT STRAND LOCATION SEQUENCE SHALL BE AS SHOWN (1), (2) ETC.

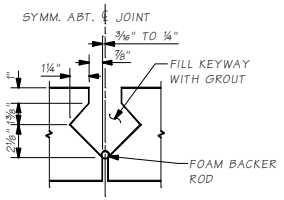

ALTERNATE 1

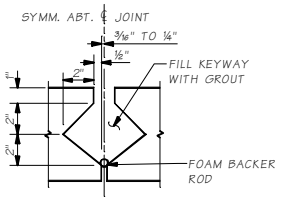

ALTERNATE 2

SECTION D — KEYWAY

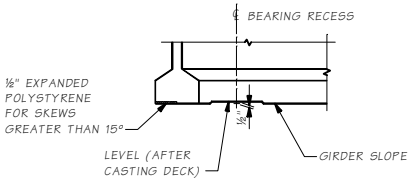

ELEVATION

BEARING RECESS AND BOTTOM FLANGE SPALL PROTECTION DETAIL

Bridge Design Engr.	M:\Standards - In Progress\Girders\DECK BULB TEE\DETAILS 2 OF 2.MAN								
Supervisor					REGION NO.	STATE	FED. AID PROJ. NO.	SHEET NO.	TOTAL SHEETS
Designed By					10	WASH.			
Checked By					JOB NUMBER				
Detailed By									
Bridge Projects Engr.									
Prelim. Plan By									
Architect/Specialist	DATE	REVISION	BY	APP'D					

BRIDGE AND STRUCTURES OFFICE

Washington State Department of Transportation

STANDARD PRESTRESSED CONCRETE GIRDERS

DECK BULB TEE GIRDER DETAILS 2 OF 2

BRIDGE SHEET NO. | SHEET OF SHEETS

Last revised on : 06/22/2011

DETAILS SHEET NO. 5.6-A6-3

Wed Jul 20 13:39:42 2011

GIRDER SCHEDULE

SPAN	GIRDER	GIRDER HEIGHT H (IN)	"A" DIMENSION AT ℄ BEARINGS (IN)	L (FT-IN)	L_L (FT-IN)	L_T (FT-IN)	θ_1 (DEG.)	θ_2 (DEG.)	PLAN LENGTH (ALONG GIRDER GRADE) (FT-IN)	MIN. CONC. COMP. STRENGTH @ 28-DAYS $F'C$ (KSI)	MIN. CONC. COMP. STRENGTH @ RELEASE $F'CI$ (KSI)	NUMBER OF STRAIGHT STRANDS	NUMBER OF TEMP. STRANDS	E (IN)	STRAIGHT STR. TO EXTEND END 1	STRAIGHT STR. TO EXTEND END 2	STRAIGHT STRANDS TO DEBOND GROUP 1 STRANDS TO DEBOND	GROUP 1 SLEEVED LENGTH AT ENDS TO PREVENT BOND (FT-IN)	GROUP 2 STRANDS TO DEBOND	GROUP 2 SLEEVED LENGTH AT ENDS TO PREVENT BOND (FT-IN)	GROUP 3 STRANDS TO DEBOND	GROUP 3 SLEEVED LENGTH AT ENDS TO PREVENT BOND (FT-IN)	DECK SCREED CAMBER C (IN)	D LOWER BOUND @ 40 DAYS (IN)	D UPPER BOUND @ 120 DAYS (IN)	REINFORCEMENT DETAILS V1	V2 (IN)	V3	V4 (IN)	V5	V6 (IN)
-	-	-	-	-	-	-	-	-	-	-	-	-	-	-	? TO ?	? TO ?	? TO ?	-	? TO ?	-	? TO ?	-	-	-	-	-	-	-	-	-	-	-
-	-	-	-	-	-	-	-	-	-	-	-	-	-	-	-	-	-	-	-	-	-	-	-	-	-	-	-	-	-	-	-	-

GIRDER NOTES

1. PLAN LENGTH SHALL BE INCREASED AS NECESSARY TO COMPENSATE FOR SHORTENING DUE TO PRESTRESS AND SHRINKAGE.
2. ALL PRETENSIONED AND TEMPORARY STRANDS SHALL BE 0.6"ø AASHTO M203 GRADE 270 LOW RELAXATION STRANDS, JACKED TO 202.5 KSI.
3. CUT ALL STRANDS FLUSH WITH THE GIRDER ENDS AND PAINT WITH AN APPROVED EPOXY RESIN, EXCEPT FOR EXTENDED STRANDS AS SHOWN.
4. THE TOP SURFACE OF THE GIRDER SHALL BE ROUGHENED IN ACCORDANCE WITH SECTION 6-02.3(25)H OF THE STANDARD SPECIFICATIONS.
5. LIFTING EMBEDMENTS SHALL BE INSTALLED IN ACCORDANCE WITH SECTION 6-02.3(25)L OF THE STANDARD SPECIFICATIONS.
6. ALL REINFORCING STEEL SPLICES SHALL BE 2'-0" MINIMUM, UNLESS SHOWN OTHERWISE.
7. STRUCTURAL STEEL SHAPES AND ASSEMBLIES SHALL BE ASTM A36. THEY SHALL BE PAINTED WITH A PRIMER COAT IN ACCORDANCE WITH STD. SPEC. 6-07.3(9). WELD TIES SHALL BE PAINTED WITH A FIELD PRIMER COAT OF AN ORGANIC ZINC PAINT AFTER FIELD WELDING.
8. NO TRAFFIC SHALL BE ALLOWED UNTIL THE BRIDGE DECK CONCRETE HAS ATTAINED A MINIMUM STRENGTH OF 3000 PSI.
9. TEMPORARY STRANDS SHALL BE UNBONDED OVER ALL BUT THE END 10'-0" OF THE SLAB LENGTH. TEMPORARY STRANDS SHALL BE CUT AFTER ALL VOIDED SLABS ARE ERECTED, BUT BEFORE ROADWAY CONCRETE SLAB IS CAST.
10. DEFORMED WELDED WIRE REINFORCEMENT CONFORMING TO SECTION 9-07.7 WITH DEFORMED WIRE CONFORMING TO SECTION 9-07.8 MAY BE SUBSTITUTED FOR MILD STEEL REINFORCEMENT IF AASHTO LRFD BRIDGE DESIGN SPECIFICATION REQUIREMENTS (INCLUDING DEVELOPMENT AND ANCHORAGE) ARE MET. WELDED WIRE REINFORCEMENT SHALL HAVE THE SAME AREA AND SPACING AS THE MILD STEEL REINFORCEMENT THAT IT REPLACES AND THE YIELD STRENGTH SHALL BE GREATER THAN OR EQUAL TO 60 KSI. SHEAR STIRRUP LONGITUDINAL WIRES AND TACK WELDS SHALL BE EXCLUDED FROM GIRDER WEBS. LONGITUDINAL WIRES FOR ANCHORAGE OF WELDED WIRE REINFORCEMENT SHALL HAVE AN AREA OF 40% OR MORE OF THE AREA OF THE WIRE BEING ANCHORED BUT SHALL NOT BE LESS THAN D4.

NOTES TO DESIGNER:

1. SLAB GIRDER DETAIL SHEETS 1 TO 3 ARE INTENDED TO BE USED AS IS WITHOUT NEED FOR MODIFICATION FOR MOST PROJECTS. PROJECT SPECIFIC GIRDER DETAILS ARE THEN LIMITED TO THE GIRDER SCHEDULE.
2. V1 SPA. @ V2 IS INTENDED TO BE THE SPLITTING RESISTANCE ZONE DEFINED BY BDM 5.6.2.F.
3. V3 SPA. @ V4 IS INTENDED TO BE THE CONFINEMENT REINFORCEMENT ZONE DEFINED BY BDM 5.6.2.G.
4. DIMENSIONS IN THE GIRDER SCHEDULE SHALL BE SHOWN TO THE NEAREST ⅛TH INCH.
5. THESE SHEETS ASSUME STANDARD GIRDER WIDTHS. GIRDER WIDTHS MAY VARY FROM THE STANDARD WIDTH UP TO 8'-0" BUT THESE SHEETS MUST BE MODIFIED ACCORDINGLY.
6. MAXIMUM GIRDER LENGTHS ARE AS FOLLOWS:
   33.33 FT FOR H = 12"
   50.00 FT FOR H = 18"
   72.22 FT FOR H = 26"
   83.33 FT FOR H = 30"
   100.00 FT FOR H = 36"
7. PROVIDE A LONGITUDINAL ▽#4 IN CIP ROADWAY SLAB INSIDE G9 HOOKS (TYP.)
8. DOWEL BARS AND HOLES MAY BE DELETED IF TRANSVERSE STOPS ARE PROVIDED. CHECK DOWEL BARS FOR ADEQUACY.
9. GAP BETWEEN SLAB UNITS MAY VARY AT OR NEAR CROWNS OR SUPERELEVATION ANGLE POINTS. CONSIDER A LARGER CONNECTION ROD OR PLATE IF NECESSARY.
10. PLACE DEBONDED STRANDS IN INTERIOR LOCATIONS WITHIN SECOND ROW IF POSSIBLE.
11. MAXIMUM SKEW ANGLE IS 30°.
12. THIS STANDARD IS INTENDED TO BE USED WITH A 5" MINIMUM CIP CONCRETE DECK. MODIFICATIONS ARE REQUIRED IF THIS STANDARD IS USED WITH AN HMA OVERLAY.

Last revised on : 7/8/2011

SHEET NO. OF SHEETS

SR FILE NO.

5.6-A8-1

Bridge Design Engr:	M:\Standards - In Progress\Girders\SLAB\SLAB SCHEDULE AND NOTES.MAN							
Supervisor								
Designed By								
Checked By								
Detailed By								
Bridge Projects Engr.								
Prelim. Plan By								
Architect/Specialist	DATE	REVISION	BY	APP'D				

REGION NO.	STATE	FED. AID PROJ. NO.	SHEET NO.	TOTAL SHEETS
10	WASH.			
JOB NUMBER				

BRIDGE AND STRUCTURES OFFICE

Washington State Department of Transportation

STANDARD PRESTRESSED CONCRETE GIRDERS

SLAB GIRDER GIRDER SCHEDULE

BRIDGE SHEET NO. SHEET OF SHEETS

Wed Jul 20 09:22:36 2011

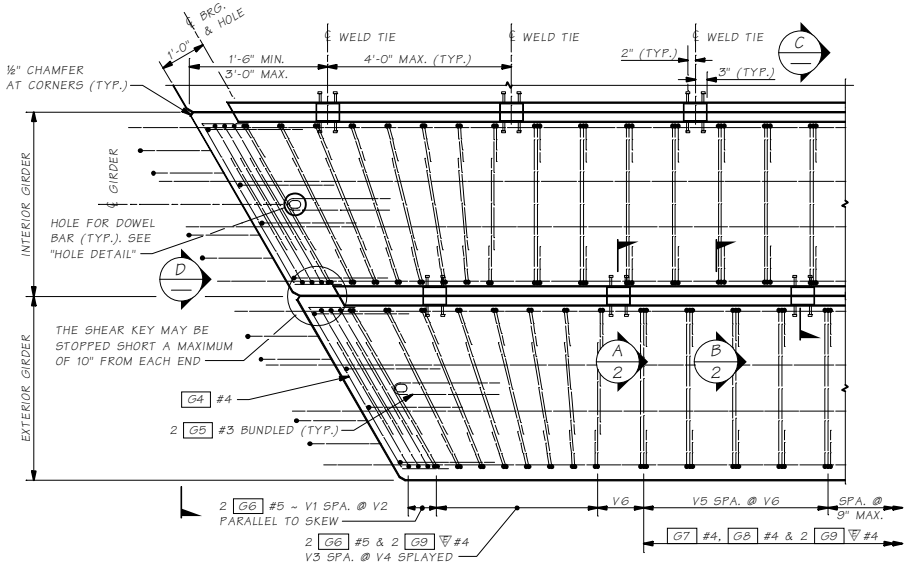

PLAN

S1 BARS NOT SHOWN FOR CLARITY. SEE TRAFFIC BARRIER SHEETS FOR DETAILS AND LOCATION.

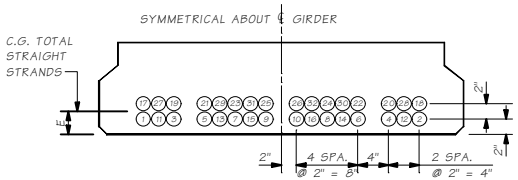

STRAND PATTERN

STRAIGHT STRAND LOCATION SEQUENCE SHALL BE AS SHOWN (1), (2) ETC.

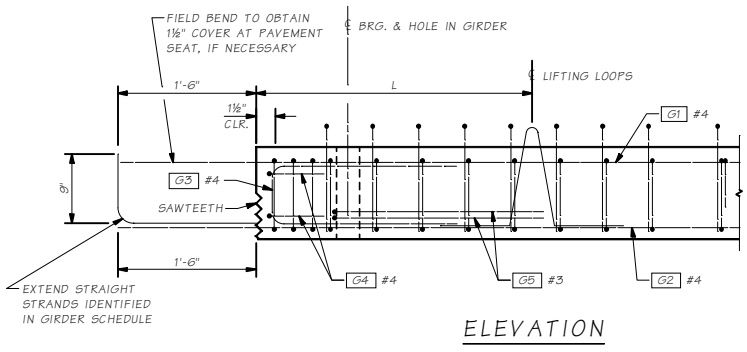

ELEVATION

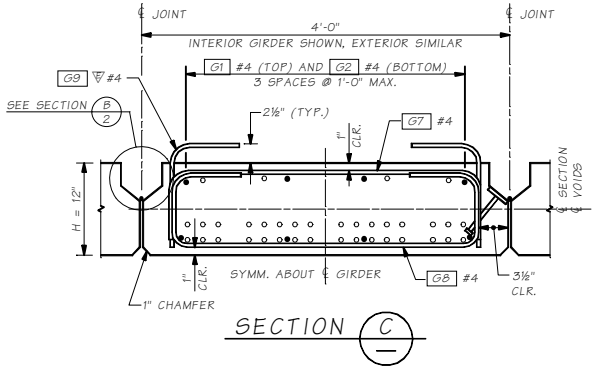

SECTION C

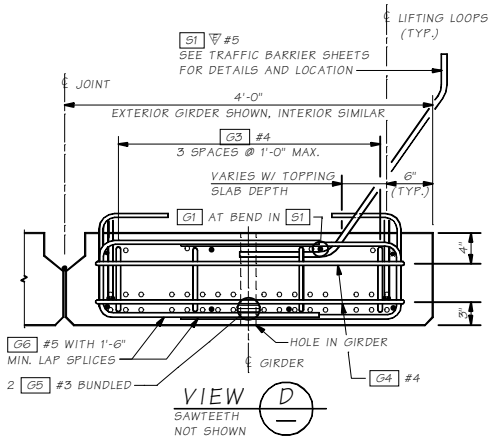

VIEW D

SAWTEETH NOT SHOWN

Bridge Design Engr.	M:\Standards - In Progress\Girders\SLAB\SLAB 12 1 OF 2.MAN				REGION NO.	STATE	FED. AID PROJ. NO.	SHEET NO.	TOTAL SHEETS	BRIDGE AND STRUCTURES OFFICE
Supervisor					10	WASH				Washington State Department of Transportation
Designed By					JOB NUMBER					STANDARD PRESTRESSED CONCRETE GIRDERS
Checked By										12" SLAB GIRDER DETAILS 1 OF 2
Detailed By										BRIDGE SHEET NO.
Bridge Projects Engr.										SHEET OF SHEETS
Prelim. Plan By										
Architect/Specialist	DATE	REVISION	BY	APP'D						

Last revised on : 7/8/2011

SHEET NO. 5.6-A8-2

Wed Jul 20 09:22:36 2011

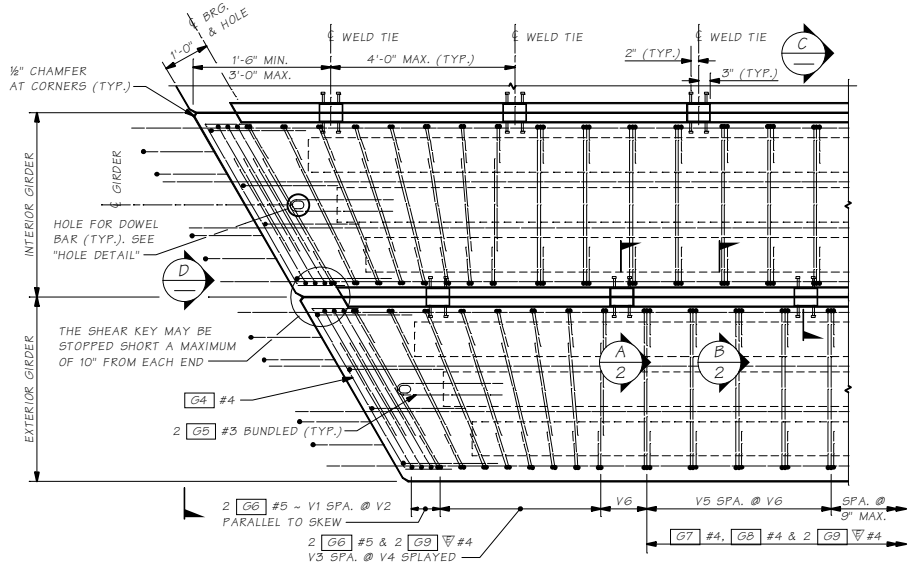

PLAN

S1 BARS NOT SHOWN FOR CLARITY. SEE TRAFFIC BARRIER SHEETS FOR DETAILS AND LOCATION.

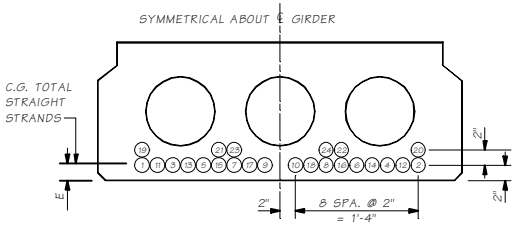

STRAND PATTERN

STRAIGHT STRAND LOCATION SEQUENCE SHALL BE AS SHOWN (1), (2) ETC.

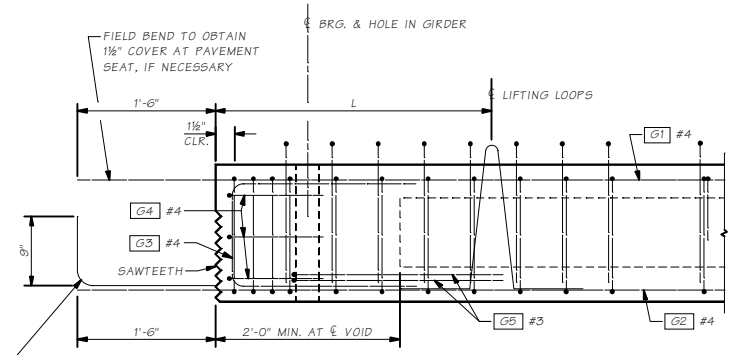

ELEVATION

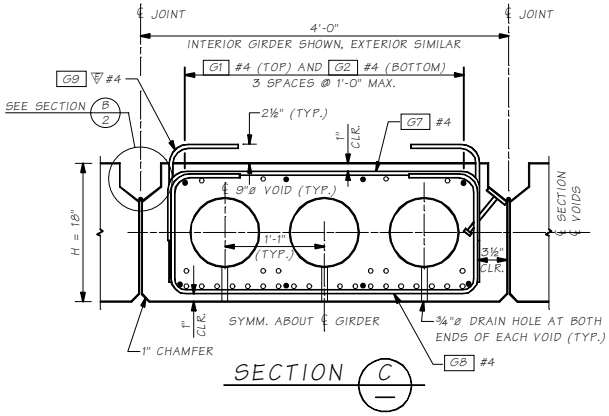

SECTION C

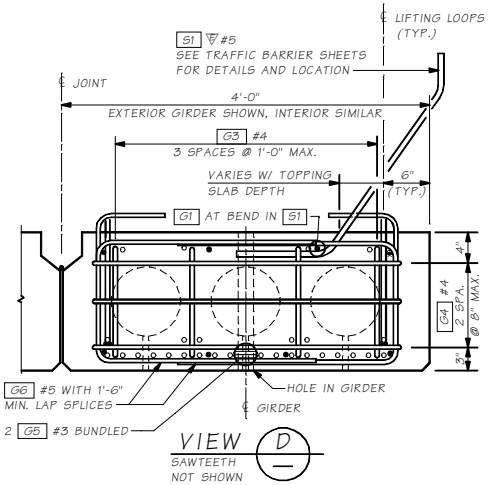

VIEW D

SAWTEETH NOT SHOWN

Bridge Design Engr.	M:\Standards - In Progress\Girders\SLAB\SLAB 18 1 OF 2.MAN				REGION NO.	STATE	FED. AID PROJ. NO.	SHEET NO.	TOTAL SHEETS	BRIDGE SHEET NO.
Supervisor					10	WASH.				
Designed By					JOB NUMBER					SHEET
Checked By										
Detailed By										OF
Bridge Projects Engr.										
Prelim. Plan By										SHEETS
Architect/Specialist	DATE	REVISION	BY	APP'D						

BRIDGE AND STRUCTURES OFFICE

Washington State Department of Transportation

STANDARD PRESTRESSED CONCRETE GIRDERS

18" SLAB GIRDER DETAILS 1 OF 2

Wed Jul 20 09:22:36 2011

Last revised on : 7/8/2011

SR FILE NO. SHEET

5.6-A8-3

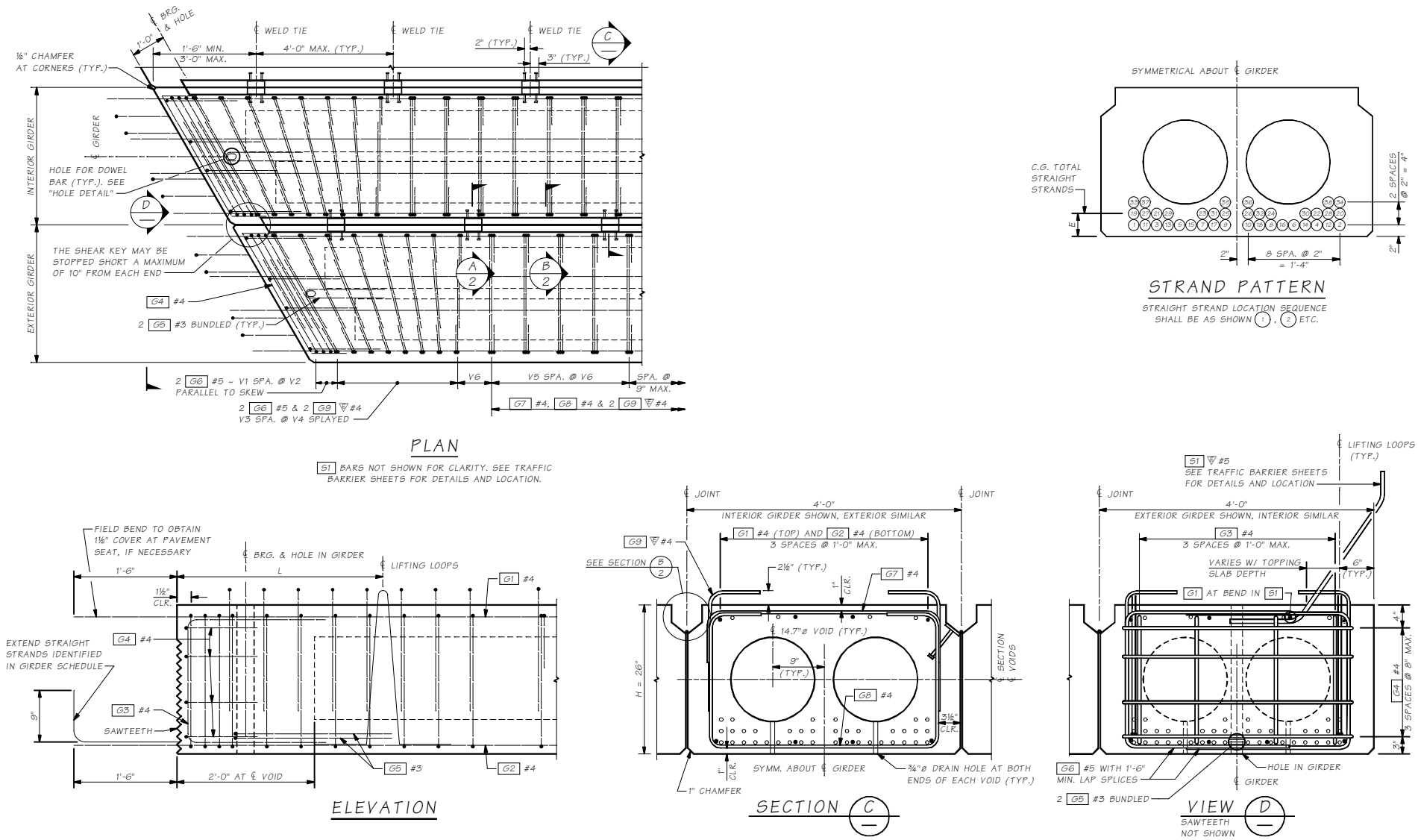

Bridge Design Engr.	M:\Standards - In Progress\Girders\SLAB\SLAB 26 1 OF 2.MAN				REGION NO.	STATE	FED. AID PROJ. NO.	SHEET NO.	TOTAL SHEETS
Supervisor					10	WASH.			
Designed By					JOB NUMBER				
Checked By									
Detailed By									
Bridge Projects Engr.									
Prelim. Plan By									
Architect/Specialist	DATE	REVISION	BY	APP'D					

BRIDGE AND STRUCTURES OFFICE

Washington State Department of Transportation

STANDARD PRESTRESSED CONCRETE GIRDERS

26" SLAB GIRDER DETAILS 1 OF 2

BRIDGE SHEET NO.

SHEET OF SHEETS

Wed Jul 20 09:22:37 2011

Last revised on : 7/8/2011

SR FILE NO. SHEET

5.6-A8-4

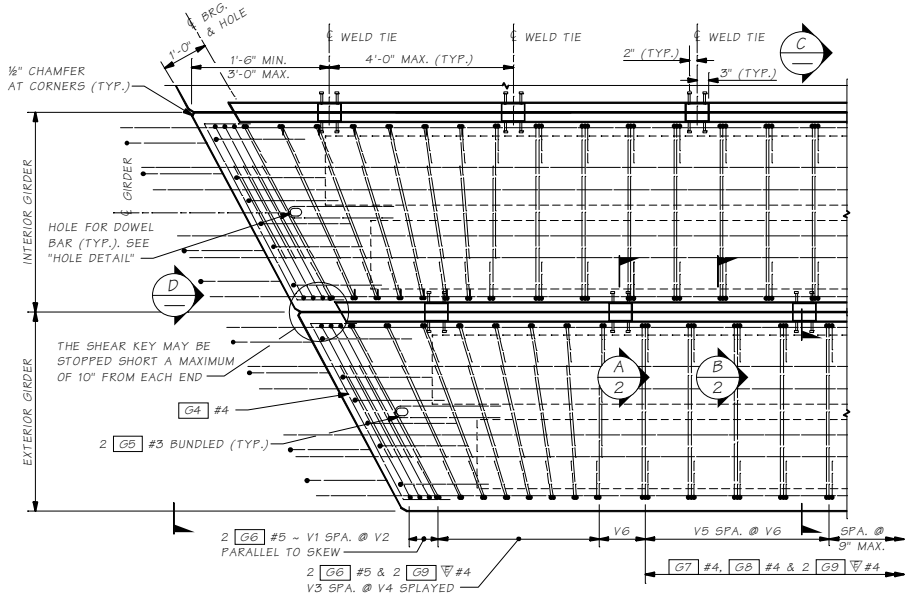

PLAN

S1 BARS NOT SHOWN FOR CLARITY. SEE TRAFFIC BARRIER SHEETS FOR DETAILS AND LOCATION.

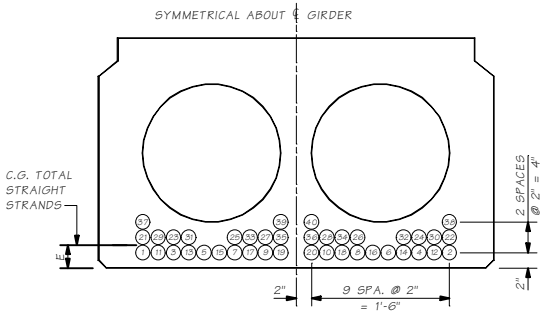

STRAND PATTERN

STRAIGHT STRAND LOCATION SEQUENCE SHALL BE AS SHOWN (1), (2) ETC.

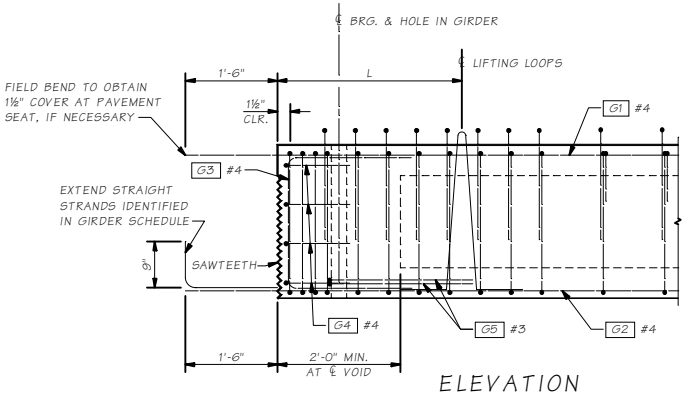

ELEVATION

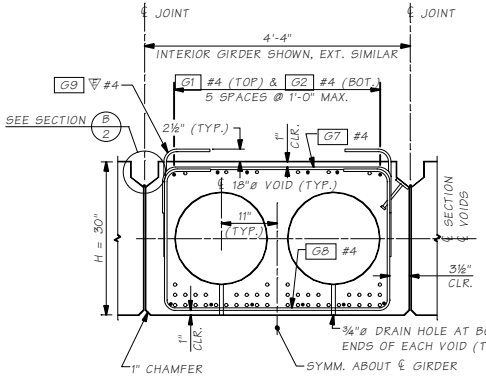

SECTION C

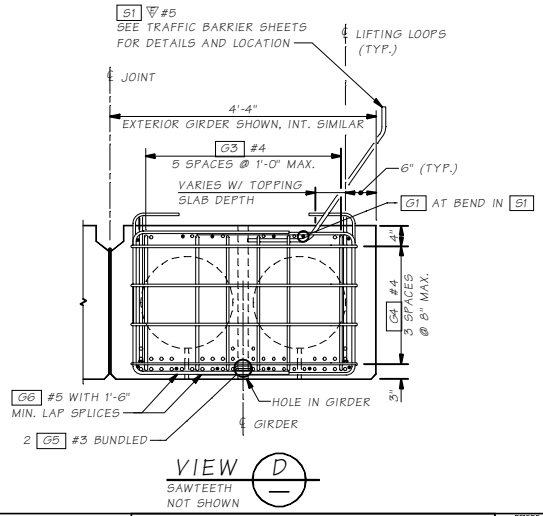

VIEW D

SAWTEETH NOT SHOWN

Bridge Design Engr.	M:\Standards - In Progress\Girders\SLAB\SLAB 30 1 OF 2.MAN				REGION NO.	STATE	FED. AID PROJ. NO.	SHEET NO.	TOTAL SHEETS
Supervisor					10	WASH			
Designed By					JOB NUMBER				
Checked By									
Detailed By									
Bridge Projects Engr.									
Prelim. Plan By									
Architect/Specialist	DATE	REVISION	BY	APPD					

BRIDGE AND STRUCTURES OFFICE

Washington State Department of Transportation

STANDARD PRESTRESSED CONCRETE GIRDERS

30" SLAB GIRDER DETAILS 1 OF 2

BRIDGE SHEET NO. | SHEET | OF | SHEETS

Last revised on : 7/8/2011

SHEET ____ FILE NO. ____ SR

5.6-A8-5

Wed Jul 20 09:22:37 2011

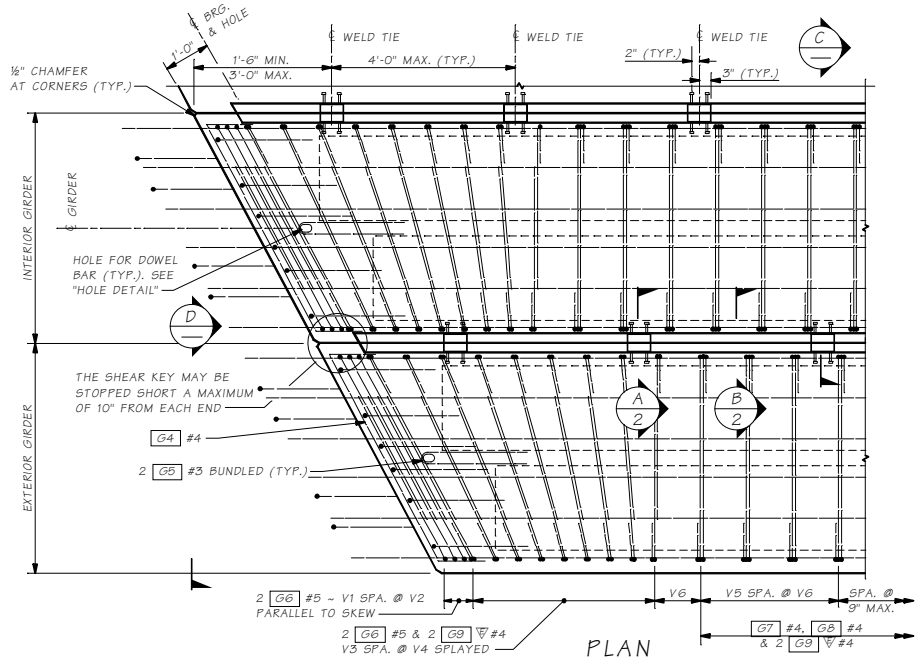

PLAN

S1 BARS NOT SHOWN FOR CLARITY. SEE TRAFFIC BARRIER SHEETS FOR DETAILS AND LOCATION.

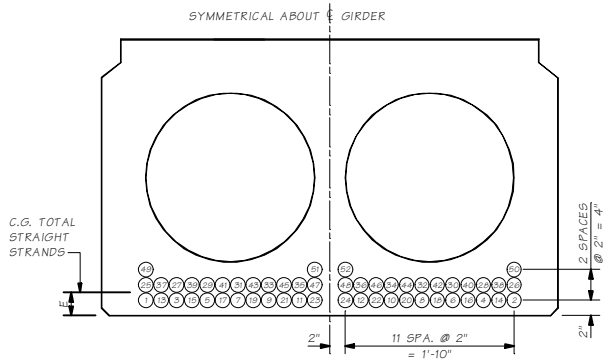

STRAND PATTERN

STRAIGHT STRAND LOCATION SEQUENCE SHALL BE AS SHOWN (1), (2) ETC.

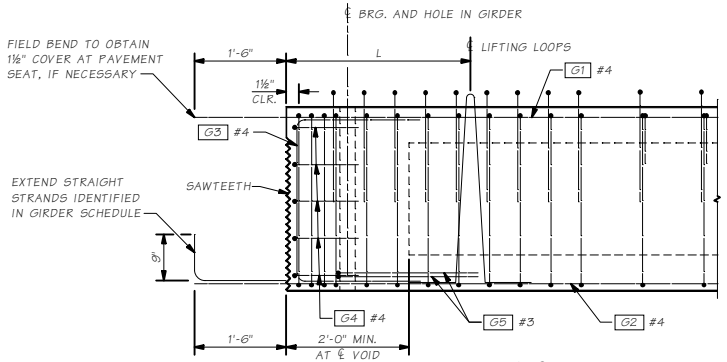

ELEVATION

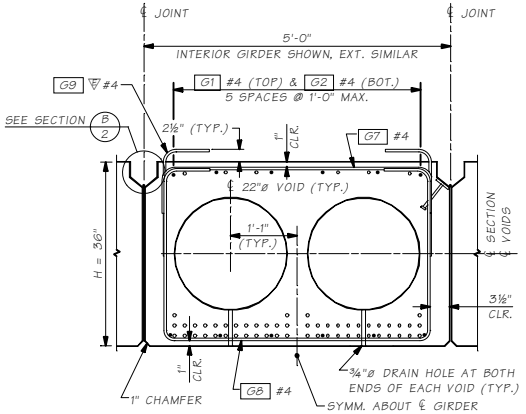

SECTION C

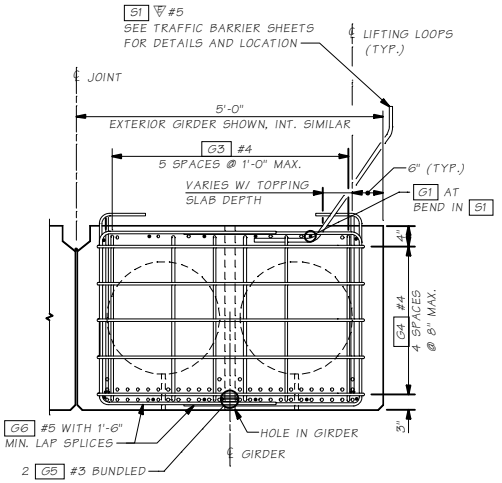

VIEW D

SAWTEETH NOT SHOWN

Last revised on : 7/8/2011

Bridge Design Engr.	M:\Standards - In Progress\Girders\SLAB\SLAB 36 1 OF 2.MAN				REGION NO.	STATE	FED. AID PROJ. NO.	SHEET NO.	TOTAL SHEETS
Supervisor					10	WASH			
Designed By					JOB NUMBER				
Checked By									
Detailed By									
Bridge Projects Engr.									
Prelim.Plan By									
Architect/Specialist	DATE	REVISION	BY	APP'D					

BRIDGE AND STRUCTURES OFFICE

Washington State Department of Transportation

STANDARD PRESTRESSED CONCRETE GIRDERS

36" SLAB GIRDER DETAILS 1 OF 2

BRIDGE SHEET NO.

SHEET OF SHEETS

SHEET

FILE NO.

SR

5.6-A8-6

Wed Jul 20 09:22:37 2011

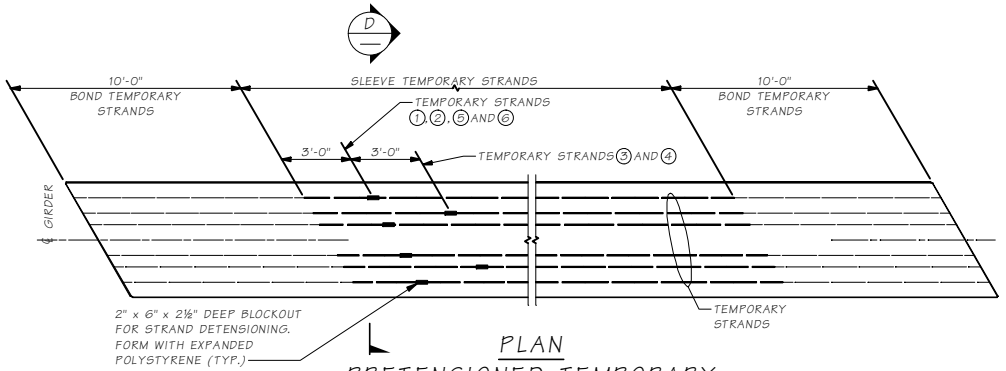

PLAN
PRETENSIONED TEMPORARY TOP STRANDS

SEE "GIRDER SCHEDULE" FOR REQUIRED NUMBER OF TEMPORARY STRANDS.

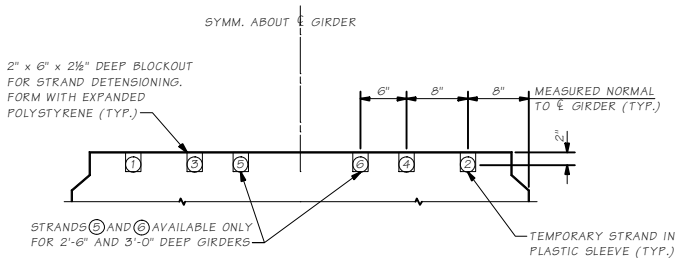

SECTION D

TEMPORARY STRAND LOCATION SEQUENCE SHALL BE AS SHOWN 1, 2 ETC.

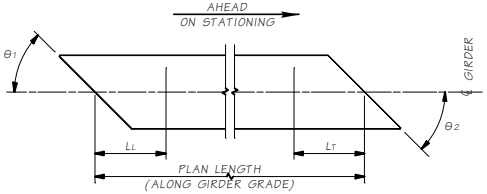

GIRDER SCHEDULE LEGEND

LL AND LT ARE SHIPPING SUPPORT LOCATIONS AT LEADING AND TRAILING ENDS, RESPECTIVELY.

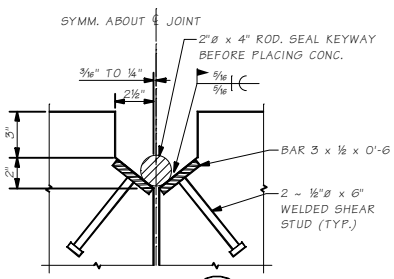

SECTION A/1
WELD TIE ALTERNATE #1

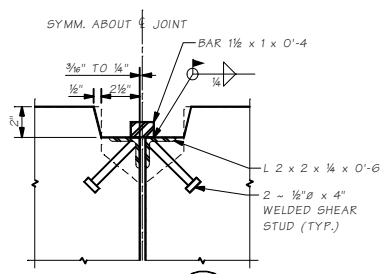

SECTION A/1
WELD TIE ALTERNATE #2

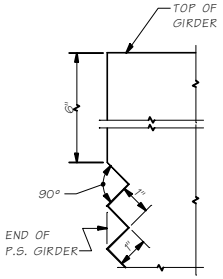

SAWTOOTH DETAILS
SAWTEETH ARE FULL WIDTH

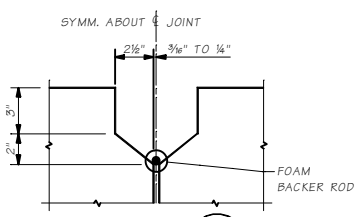

SECTION B/1
SHEAR KEY

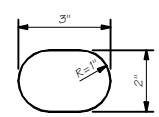

HOLE DETAIL

BENDING DIAGRAM (ALL DIMENSIONS ARE OUT TO OUT)

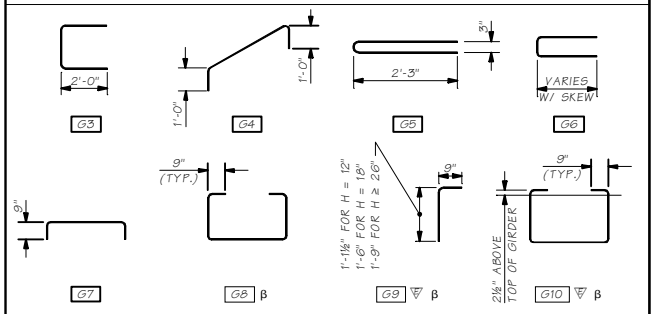

β G10 BARS MAY BE SUBSTITUTED FOR G8 AND G9 BARS.

Bridge Design Engr.	M:\Standards - In Progress\Girders\SLAB\SLAB 2 OF 2.MAN				REGION NO.	STATE	FED. AID PROJ. NO.	SHEET NO.	TOTAL SHEETS
Supervisor					10	WASH.			
Designed By					JOB NUMBER				
Checked By									
Detailed By									
Bridge Projects Engr.									
Prelim. Plan By									
Architect/Specialist	DATE	REVISION	BY	APP'D					

BRIDGE AND STRUCTURES OFFICE

Washington State Department of Transportation

STANDARD PRESTRESSED CONCRETE GIRDERS

SLAB GIRDER DETAILS 2 OF 2

BRIDGE SHEET NO

SHEET OF SHEETS

Wed Jul 20 09:22:38 2011

Last revised on : 7/8/2011

SR FILE NO. SHEET

5.6-A8-7

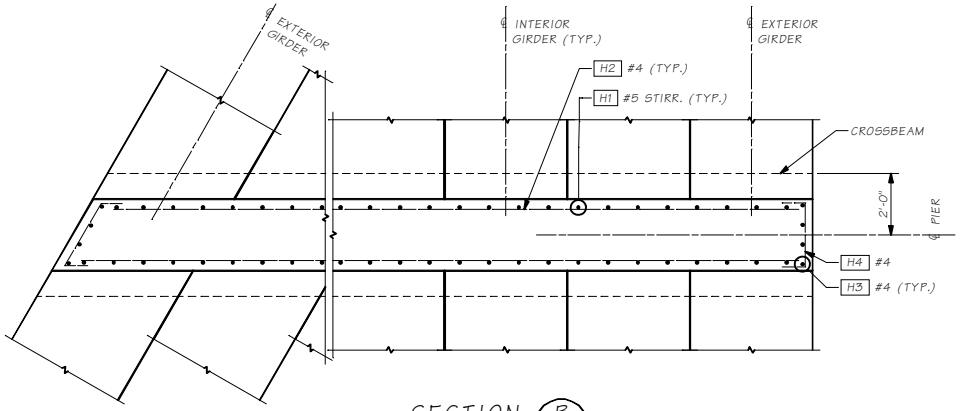

SKEWED

SECTION B

NO SKEW

ELEVATION AT TOP OF OAK BLOCK AT ℄ GIRDER

GIRDER	PIER 2	
	BACK STATION	AHEAD STATION

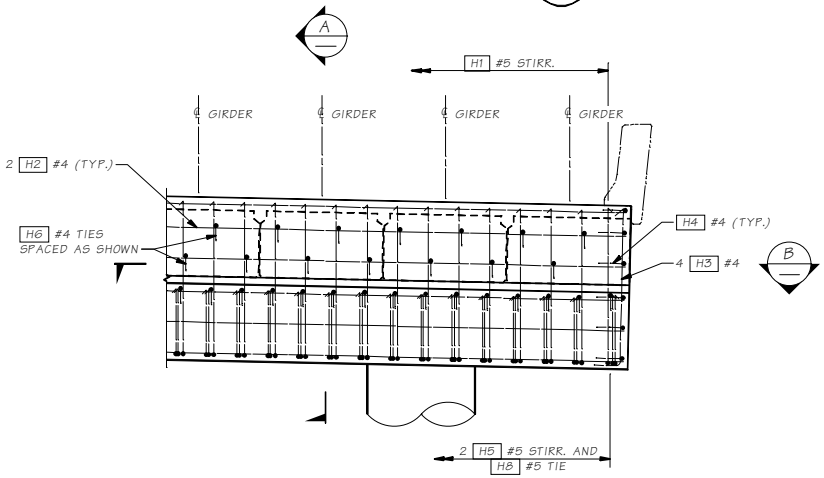

ELEVATION

NOTE TO DETAILER:
Revise Details to show correct girder height.

NOTES:

1. CUT/RELEASE GIRDER TEMPORARY STRANDS BEFORE CASTING DIAPHRAGM AND DECK SLAB. SEE TEMPORARY STRAND CUTTING SEQUENCE.
2. EXTENDED STRANDS AND GIRDER REINFORCING NOT SHOWN FOR CLARITY.
3. LONGITUDINAL DIMENSIONS ARE NORMAL TO SKEW.
4. FOR CONCRETE PLACEMENT PROCEDURE SEE "SUPERSTRUCTURE CONSTRUCTION SEQUENCE" SHEET.

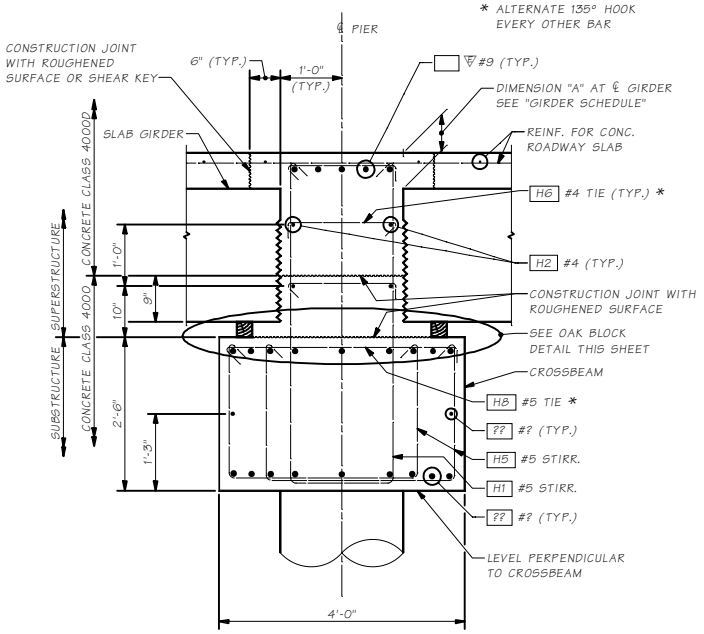

SECTION A

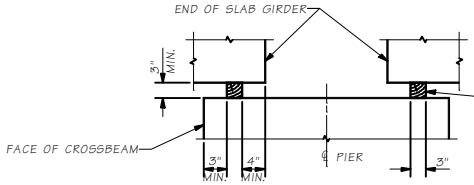

OAK BLOCK PLACED PARALLEL TO FACE OF CROSSBEAM, FULL WIDTH OF GIRDER. REMOVE AFTER PLACING TRAFFIC BARRIER.

ASPECT RATIO $\left(\frac{\text{WIDTH}}{\text{HEIGHT}}\right)$ SHOULD NOT BE LESS THAN ONE AT ℄ GIRDER (TYP.)

OAK BLOCK DETAIL

Bridge Design Engr.	M:\Standards - In Progress\Girders\SLAB\SLAB GIRDER FIXED DIAPHRAGM.MAN				REGION NO.	STATE	FED. AID PROJ. NO.	SHEET NO.	TOTAL SHEETS
Supervisor					10	WASH			
Designed By									
Checked By					JOB NUMBER				
Detailed By									
Bridge Projects Engr.									
Prelim. Plan By									
Architect/Specialist	DATE	REVISION	BY	APP'D					

BRIDGE AND STRUCTURES OFFICE

Washington State Department of Transportation

STANDARD PRESTRESSED CONCRETE GIRDERS

SLAB GIRDER FIXED DIAPHRAGM

BRIDGE SHEET NO.

SHEET OF SHEETS

SR FILE NO. SHEET

5.6-A8-8

Wed Jul 20 09:22:38 2011

Last revised on : 7/20/2011

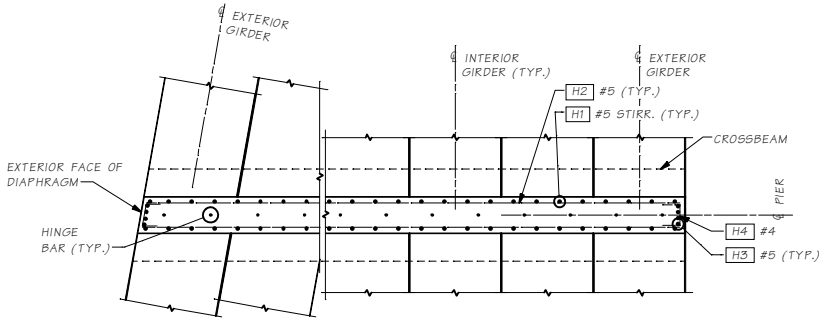

SKEWED
10° MAX. SKEW FOR HINGE DIAPHRAGM.

NO SKEW

SECTION B

ELEVATION AT TOP OF OAK BLOCK AT ℄ GIRDER

GIRDER	PIER 2	
	BACK STATION	AHEAD STATION

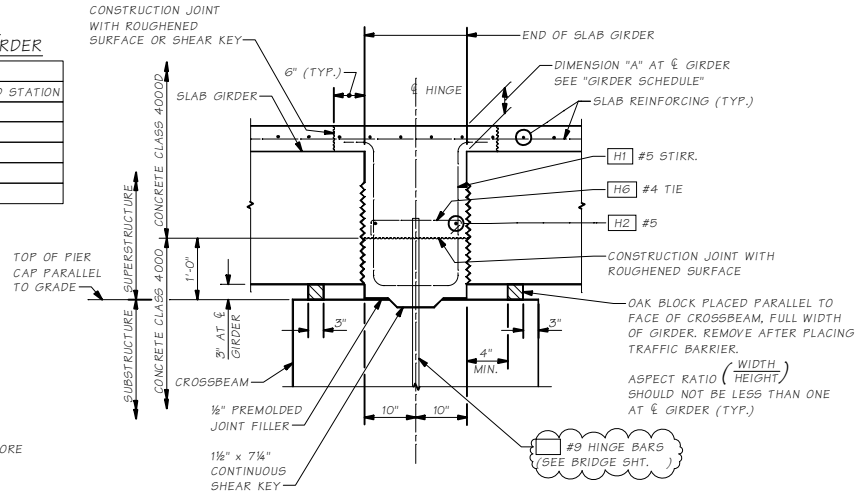

SECTION A

NOTES:

1. CUT/RELEASE GIRDER TEMPORARY STRANDS BEFORE CASTING DIAPHRAGM AND DECK SLAB. SEE TEMPORARY STRAND CUTTING SEQUENCE.
2. EXTENDED STRANDS AND GIRDER REINFORCING NOT SHOWN FOR CLARITY.
3. LONGITUDINAL DIMENSIONS ARE NORMAL TO SKEW.
4. FOR CONCRETE PLACEMENT PROCEDURE SEE "SUPERSTRUCTURE CONSTRUCTION SEQUENCE" SHEET.

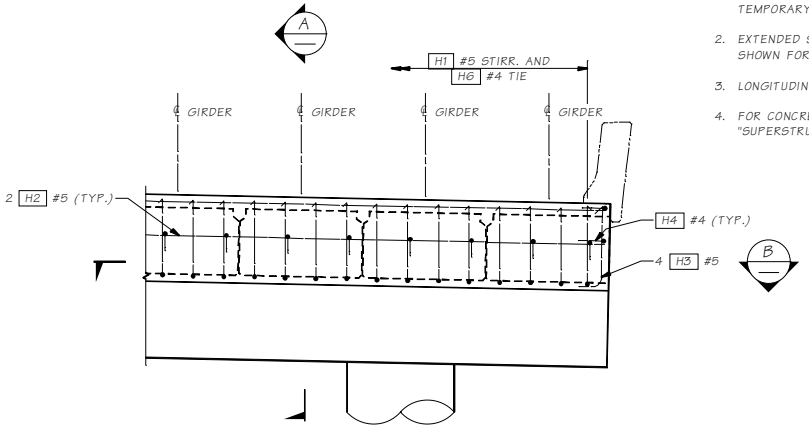

ELEVATION

NOTE TO DETAILER:
Revise Details to show correct girder height.

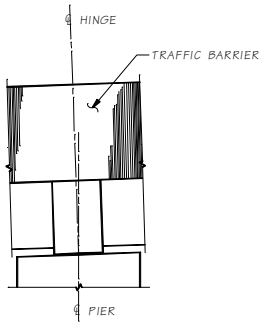

END VIEW
HINGE DIAPHRAGM

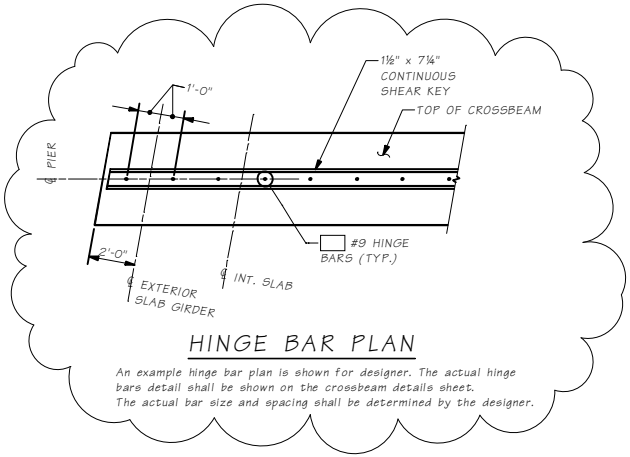

HINGE BAR PLAN

An example hinge bar plan is shown for designer. The actual hinge bars detail shall be shown on the crossbeam details sheet. The actual bar size and spacing shall be determined by the designer.

Bridge Design Engr.	M:\Standards - In Progress\Girders\SLAB\SLAB GIRDER HINGED DIAPHRAGM.MAN				REGION NO.	STATE	FED. AID PROJ. NO.	SHEET NO.	TOTAL SHEETS
Supervisor					10	WASH.			
Designed By									
Checked By					JOB NUMBER				
Detailed By									
Bridge Projects Engr.									
Prelim. Plan By									
Architect/Specialist	DATE	REVISION	BY	APP'D					

Wed Jul 20 09:22:38 2011

BRIDGE AND STRUCTURES OFFICE

Washington State Department of Transportation

STANDARD PRESTRESSED CONCRETE GIRDERS

SLAB GIRDER HINGE DIAPHRAGM

BRIDGE SHEET NO.

SHEET OF SHEETS

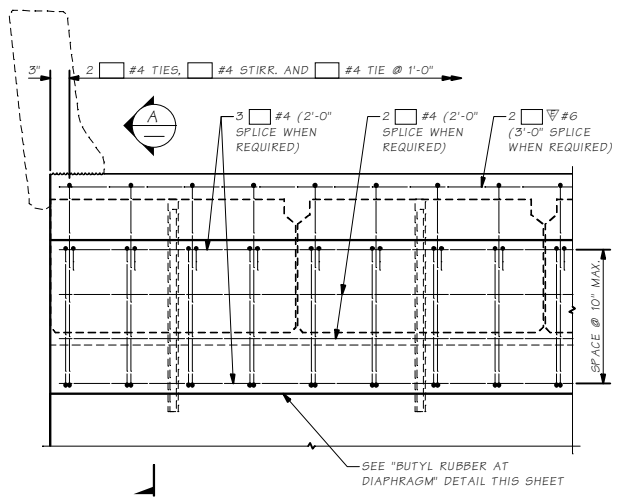

ELEVATION
END DIAPHRAGM

DIMENSIONS ARE ALONG DIAPHRAGM

NOTE TO DETAILER:
Revise Details to show correct girder height.

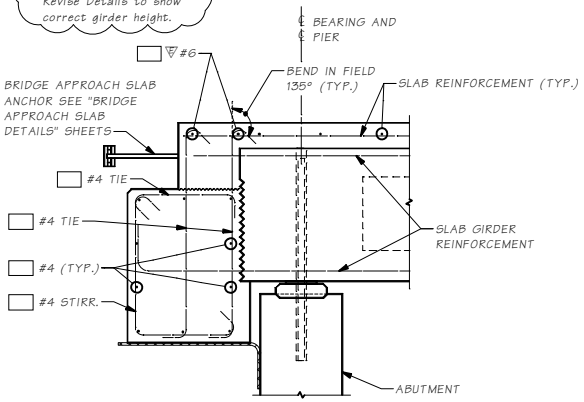

SECTION A

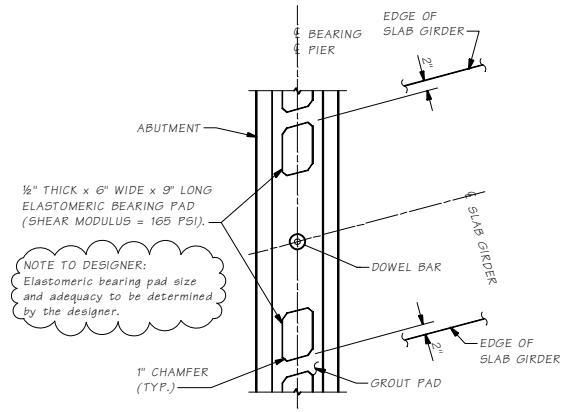

SECTION B

NOTE:
FULL BEARING OF SLAB UNIT IS REQUIRED AT EACH ELASTOMERIC BEARING

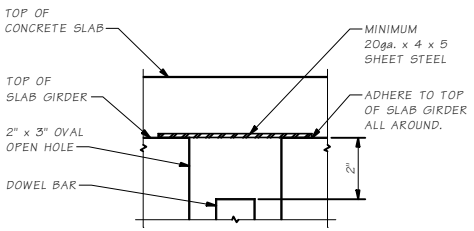

DETAIL C

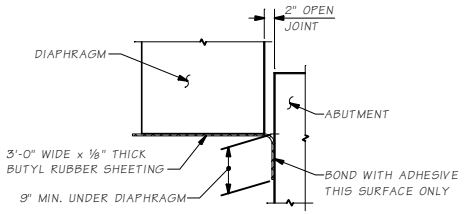

ELEVATION
BUTYL RUBBER
AT DIAPHRAGM

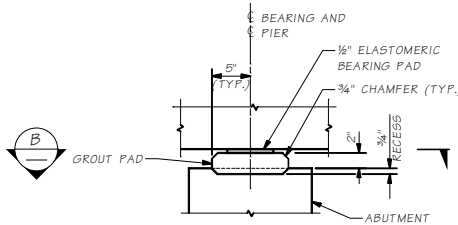

GROUT PAD DETAIL

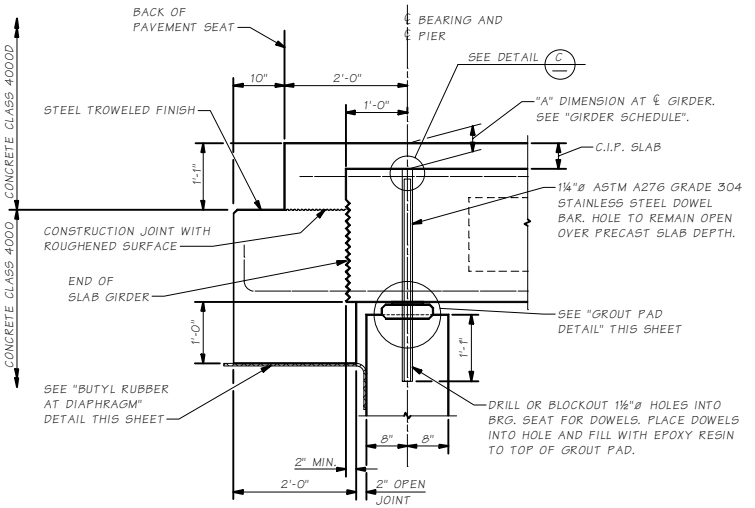

END DIAPHRAGM GEOMETRY

DIMENSIONS ARE NORMAL TO ℄ BEARING.

Dowel bars may be deleted if transverse stops are provided.

Bridge Design Engr.	M:\Standards - In Progress\Girders\SLAB\SLAB GIRDER END DIAPHRAGM.MAN				REGION NO.	STATE	FED. AID PROJ. NO.	SHEET NO.	TOTAL SHEETS
Supervisor					10	WASH.			
Designed By					JOB NUMBER				
Checked By									
Detailed By									
Bridge Projects Engr.									
Prelim. Plan By									
Architect/Specialist	DATE	REVISION	BY	APP'D					

BRIDGE AND STRUCTURES OFFICE

Washington State Department of Transportation

STANDARD PRESTRESSED CONCRETE GIRDERS

SLAB GIRDER END PIER

BRIDGE SHEET NO

SHEET OF SHEETS

SR ____ SHEET ____ FILE NO. 5.6-A8-10

Last revised on : 7/20/2011

Wed Jul 20 09:22:38 2011

GIRDER SCHEDULE

SPAN	GIRDER	GIRDER SERIES	END 1 TYPE	END 2 TYPE	"A" DIMENSION AT ℄ BEARINGS (IN)	L (FT-IN)	L_4 (FT-IN)	L_L (FT-IN)	L_T (FT-IN)	θ_1 (DEG.)	θ_2 (DEG.)	P_1 (FT-IN)	P_2 (FT-IN)	PLAN LENGTH (ALONG GIRDER GRADE) (FT-IN)	MIN. CONC. COMP. STRENGTH @ 28-DAYS F'C (KSI)	MIN. CONC. COMP. STRENGTH @ RELEASE F'CI (KSI)	NUMBER OF STRAIGHT STRANDS	NUMBER OF HARPED STRANDS	NUMBER OF TEMP. STRANDS	LOCATION OF C.G. STRANDS E (IN)	LOCATION OF C.G. STRANDS F℄ (IN)	LOCATION OF C.G. STRANDS Fo (IN)	STRAIGHT STR. TO EXTEND END 1	STRAIGHT STR. TO EXTEND END 2	DECK SCREED CAMBER C (IN)	D LOWER BOUND @ 40 DAYS (IN)	D UPPER BOUND @ 120 DAYS (IN)	REINFORCEMENT DETAILS V1	V2 (IN)	V3	V4 (IN)	V5	V6 (IN)	H1 (FT-IN)
-	-	-	-	-	-	-	-	-	-	-	-	-	-	-	-	-	-	-	-	-	-	-	ⓟ TO ⓕ	ⓟ TO ⓟ	-	-	-	-	-	-	-	-	-	-
-	-	-	-	-	-	-	-	-	-	-	-	-	-	-	-	-	-	-	-	-	-	-	-	-	-	-	-	-	-	-	-	-	-	-

NOTES TO DESIGNER:

1. *TUB GIRDER DETAIL SHEETS 1 TO 3 ARE INTENDED TO BE USED AS IS WITHOUT NEED FOR MODIFICATION FOR MOST PROJECTS. PROJECT SPECIFIC GIRDER DETAILS ARE THEN LIMITED TO THE GIRDER SCHEDULE. TUB GIRDER DETAIL SHEET 3 MAY BE OMITTED IF TEMPORARY TOP STRANDS ARE NOT USED.*
2. *V1 SPA. @ V2 IS INTENDED TO BE THE SPLITTING RESISTANCE ZONE DEFINED BY BDM 5.6.2.F.*
3. *V3 SPA. @ V4 IS INTENDED TO BE THE CONFINEMENT REINFORCEMENT ZONE DEFINED BY BDM 5.6.2.G.*
4. *G1, G2, G8 AND G9 STIRRUP HEIGHT "H1" IS GENERALLY "H" + 3" + "A" DIMENSION. HOWEVER, DESIGNERS SHALL CHECK "H1" FOR THE EFFECT OF VERTICAL CURVE AND INCREASE AS NECESSARY.*
5. *DIMENSIONS IN THE GIRDER SCHEDULE SHALL BE SHOWN TO THE NEAREST ⅛TH INCH.*
6. *THE NUMBER OF HARPED STRANDS SHOULD NOT EXCEED HALF THE NUMBER OF STRAIGHT STRANDS UNLESS THE STRAIGHT STRAND PATTERN IS FULL.*
7. *TEMPORARY TOP STRANDS REQUIRE TOP FLANGES.*
8. *DELETE UNUSED ROWS IN THE GIRDER SERIES TABLE.*

GIRDER NOTES

1. *PLAN LENGTH SHALL BE INCREASED AS NECESSARY TO COMPENSATE FOR SHORTENING DUE TO PRESTRESS AND SHRINKAGE.*
2. *ALL PRETENSIONED AND TEMPORARY STRANDS SHALL BE 0.6"ø AASHTO M203 GRADE 270 LOW RELAXATION STRANDS, JACKED TO 202.5 KSI.*
3. *FOR END TYPES A, C AND D CUT ALL STRANDS FLUSH WITH THE GIRDER ENDS AND PAINT WITH AN APPROVED EPOXY RESIN, EXCEPT FOR EXTENDED STRANDS AS SHOWN. FOR END TYPE B CUT ALL STRANDS 1" BELOW CONCRETE SURFACE AND GROUT WITH AN APPROVED EPOXY GROUT.*
4. *THE TOP SURFACE OF THE GIRDER FLANGE SHALL BE ROUGHENED IN ACCORDANCE WITH SECTION 6-02.3(25)H OF THE STANDARD SPECIFICATIONS.*
5. *LIFTING EMBEDMENTS SHALL BE INSTALLED IN ACCORDANCE WITH SECTION 6-02.3(25)L OF THE STANDARD SPECIFICATIONS.*
6. *CAUTION SHALL BE EXERCISED IN HANDLING AND PLACING GIRDERS. ALL GIRDERS SHALL BE CHECKED BY THE CONTRACTOR TO ENSURE THAT THEY ARE BRACED ADEQUATELY TO PREVENT TIPPING AND TO CONTROL LATERAL BENDING DURING SHIPPING. ONCE ERECTED, ALL GIRDERS SHALL BE BRACED LATERALLY TO PREVENT TIPPING UNTIL THE DIAPHRAGMS ARE CAST AND CURED.*
7. *FORMS FOR BEARING PAD RECESSES SHALL BE CONSTRUCTED AND FASTENED IN SUCH A MANNER AS TO NOT CAUSE DAMAGE TO THE GIRDER DURING THE STRAND RELEASE OPERATION.*
8. *TEMPORARY TOP STRANDS SHALL BE EITHER PRETENSIONED OR POST-TENSIONED IN ACCORDANCE WITH SECTION 6-02.3(25)L OF THE STANDARD SPECIFICATIONS AND THE GIRDER DETAILS SHEETS. THE LIFTING LOCATION "L" AND CONCRETE RELEASE STRENGTH "F'CI" SHOWN IN THE GIRDER SCHEDULE ASSUME THAT THE TEMPORARY TOP STRANDS ARE PRETENSIONED. ALTERNATIVELY, POST-TENSIONED TEMPORARY TOP STRANDS MAY BE USED IF THE LIFTING POINTS IN THE GIRDER SCHEDULE ARE MAINTAINED AND THE STRANDS ARE STRESSED PRIOR TO LIFTING THE GIRDER FROM THE FORM.*
9. *FOR DIAPHRAGMS, OMIT HOLES AND PLACE INSERTS ON THE INTERIOR FACE OF THE EXTERIOR WEB OF EXTERIOR GIRDERS. PLACE HOLES AND INSERTS PARALLEL TO SKEW. INSERTS SHALL BE 1"ø MEADOWBURKE MX-3 HI-TENSILE, 1"ø x 5½" WILLIAMS F22 OPEN FERRULE INSERT, 1"ø x 4⅝" DAYTON-SUPERIOR F-62 FLARED THIN SLAB FERRULE INSERT OR APPROVED EQUAL.*
10. *DEFORMED WELDED WIRE REINFORCEMENT CONFORMING TO SECTION 9-07.7 WITH DEFORMED WIRE CONFORMING TO SECTION 9-07.8 MAY BE SUBSTITUTED FOR MILD STEEL REINFORCEMENT IF AASHTO LRFD BRIDGE DESIGN SPECIFICATION REQUIREMENTS (INCLUDING DEVELOPMENT AND ANCHORAGE) ARE MET. WELDED WIRE REINFORCEMENT SHALL HAVE THE SAME AREA AND SPACING AS THE MILD STEEL REINFORCEMENT THAT IT REPLACES AND THE YIELD STRENGTH SHALL BE GREATER THAN OR EQUAL TO 60 KSI. SHEAR STIRRUP LONGITUDINAL WIRES AND TACK WELDS SHALL BE EXCLUDED FROM GIRDER WEBS. LONGITUDINAL WIRES FOR ANCHORAGE OF WELDED WIRE REINFORCEMENT SHALL HAVE AN AREA OF 40% OR MORE OF THE AREA OF THE WIRE BEING ANCHORED BUT SHALL NOT BE LESS THAN D4.*

Bridge Design Engr.	M:\Standards - In Progress\Girders\TUB\SCHEDULE AND NOTES.MAN				
Supervisor					
Designed By					
Checked By					
Detailed By					
Bridge Projects Engr.					
Prelim. Plan By					
Architect/Specialist	DATE	REVISION	BY	APP'D	

REGION NO.	STATE	FED. AID PROJ. NO.	SHEET NO.	TOTAL SHEETS
10	WASH.			
JOB NUMBER				

BRIDGE AND STRUCTURES OFFICE

Washington State Department of Transportation

STANDARD PRESTRESSED CONCRETE GIRDERS

TUB GIRDER SCHEDULE AND NOTES

BRIDGE SHEET NO. ____ SHEET ____ OF ____ SHEETS

Wed Jul 20 10:27:55 2011

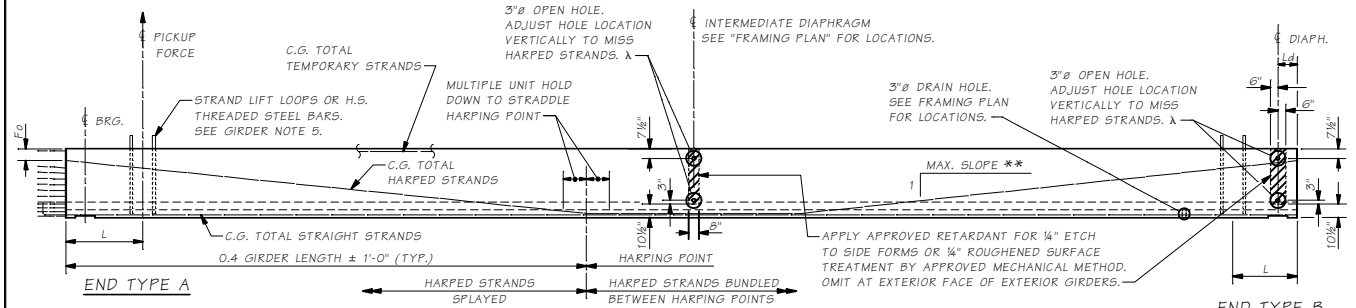

GIRDER ELEVATION

** - 8 : 1 MAXIMUM SLOPE FOR EACH HARPED STRAND

λ - SEE GIRDER NOTE 9.

β - ADJUST BAR POSITION THROUGH STRANDS

GIRDER SERIES TABLE

GIRDER SERIES	H GIRDER HEIGHT	W GIRDER SOFFIT WIDTH	TOP FLANGE	R1 EQUAL SPACES FOR G5
U54G4	4'-6"	4'-0"	NO	6
U54G5	4'-6"	5'-0"	NO	6
U66G4	5'-6"	4'-0"	NO	8
U66G5	5'-6"	5'-0"	NO	8
U78G4	6'-6"	4'-0"	NO	10
U78G5	6'-6"	5'-0"	NO	10
UF60G4	5'-0"	4'-0"	YES	7
UF60G5	5'-0"	5'-0"	YES	7
UF72G4	6'-0"	4'-0"	YES	9
UF72G5	6'-0"	5'-0"	YES	9
UF84G4	7'-0"	4'-0"	YES	11
UF84G5	7'-0"	5'-0"	YES	11

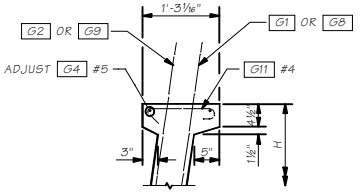

TOP FLANGE DETAIL

SYMMETRICAL ABOUT ℄ GIRDER

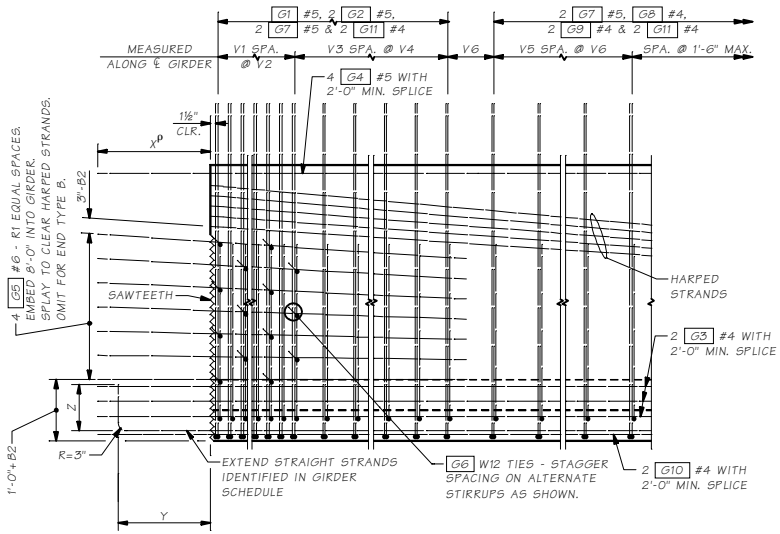

TYPICAL END ELEVATION

END TYPE C SHOWN, OTHER END TYPES SIMILAR.
U54G4 SHOWN, OTHER SERIES SIMILAR.

ρ X DIMENSION SHALL BE 1'-4" FOR G4 AT END TYPE A ONLY.

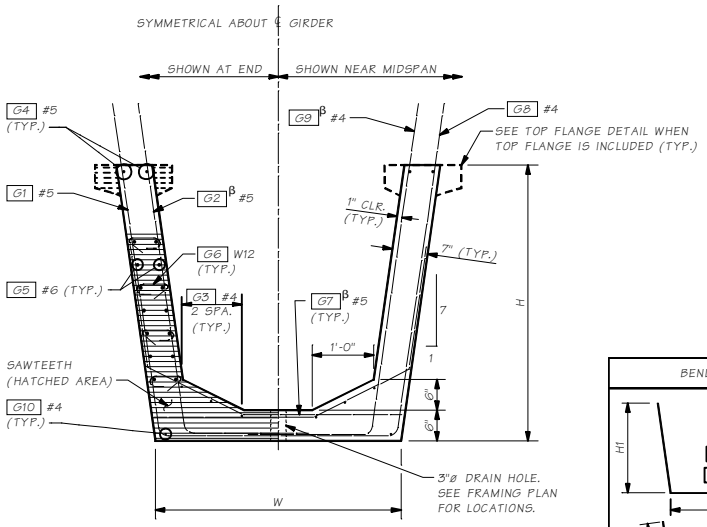

TYPICAL SECTION

STRANDS NOT SHOWN.
U54G4 SHOWN, OTHER SERIES SIMILAR.

END TYPE PROPERTIES					
END TYPE	BEARING RECESS	X	Y	Z	SAWTEETH
A	YES	1'-10"ρ	1'-6"	9"	YES
B	YES	0"	0"	0"	NO
C	NO	1'-10"	1'-6"	9"	YES
D	NO	1'-10"	SEE "STRAND EXTENSION DETAIL"		YES

BAR END PLACEMENT FOR END TYPE C	
ENDS AHEAD ON STATION	ENDS BACK ON STATION
B2 = 0" FOR G5	B2 = 2" FOR G5

BENDING DIAGRAM (ALL DIMENSIONS ARE OUT TO OUT)

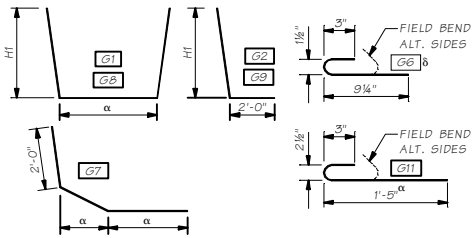

α - VARIES FOR GIRDER WIDTH AND SKEWED ENDS.
δ - #3 OR #4 MAY BE SUBSTITUTED. FIELD BENDING IS OPTIONAL.

Bridge Design Engr.	M:\Standards - In Progress\Girders\TUB\TUB GIRDER DETAILS 1 OF 3.MAN				REGION NO.	STATE	FED. AID PROJ. NO.	SHEET NO.	TOTAL SHEETS
Supervisor					10	WASH.			
Designed By					JOB NUMBER				
Checked By									
Detailed By									
Bridge Projects Engr.									
Prelim Plan By									
Architect/Specialist	DATE	REVISION	BY	APP'D					

BRIDGE AND STRUCTURES OFFICE

Washington State Department of Transportation

STANDARD PRESTRESSED CONCRETE GIRDERS

TUB GIRDER DETAILS 1 OF 3

BRIDGE SHEET NO. / SHEET / OF / SHEETS

SR ____ SHEET ____ FILE NO. 5.6-A9-2

Last revised on : 7/7/2011

Wed Jul 20 10:27:55 2011

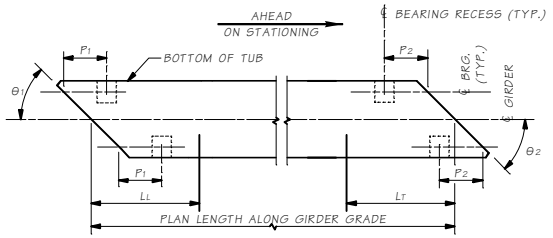

GIRDER SCHEDULE LEGEND

LL AND LT ARE SHIPPING SUPPORT LOCATIONS AT LEADING AND TRAILING ENDS, RESPECTIVELY.

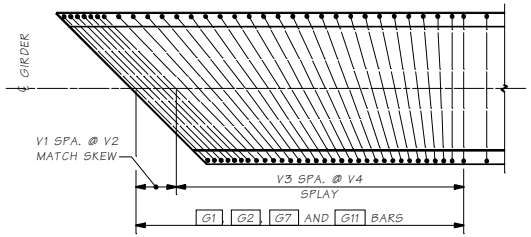

TRANSVERSE REINFORCING SKEWED ENDS

LENGTH OF G1 AND G7 VARY WITH SKEW.
ONLY TRANSVERSE REINFORCEMENT SHOWN.

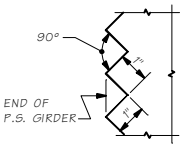

SAWTOOTH DETAILS

SAWTEETH ARE FULL WIDTH - USE SAWTOOTH KEYS FROM BOTTOM OF BOTTOM FLANGE TO BOTTOM OF LOWEST HARPED STRAND AS WELL AS TOP FLANGE ADJACENT TO HARPED STRANDS.

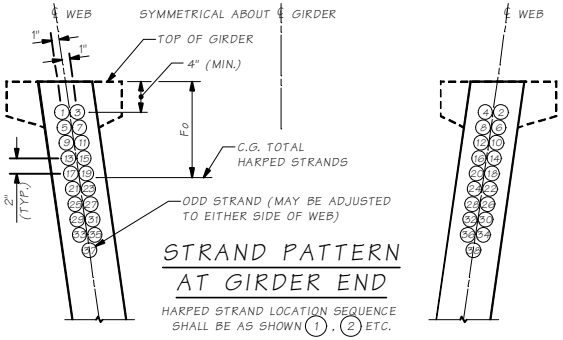

STRAND PATTERN AT GIRDER END

HARPED STRAND LOCATION SEQUENCE SHALL BE AS SHOWN (1), (2) ETC.

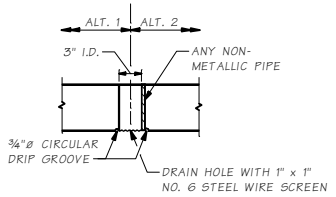

BOTTOM SLAB DRAIN HOLE DETAIL

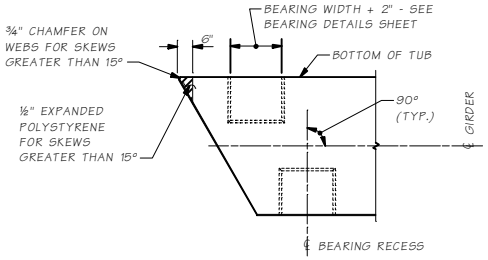

PLAN

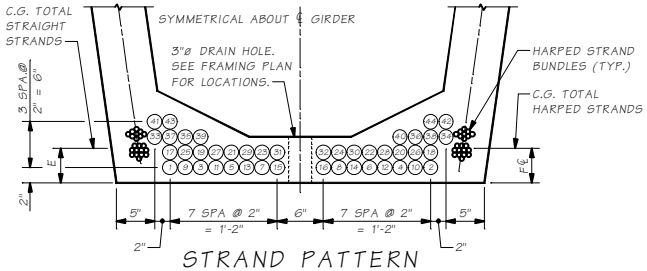

STRAND PATTERN AT ℄ SPAN

STRAIGHT STRAND LOCATION SEQUENCE SHALL BE AS SHOWN (1), (2) ETC.
4 FOOT WIDE BOTTOM FLANGE SHOWN, OTHERS SIMILAR.

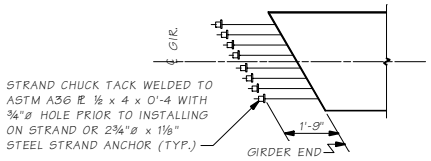

STRAND EXTENSION DETAIL

ANCHOR STRAND WITH TWO PIECE WEDGES BEFORE GIRDER ERECTION. VERIFY WEDGES ARE SEATED TIGHTLY IMMEDIATELY BEFORE PLACING DIAPHRAGM CONCRETE.

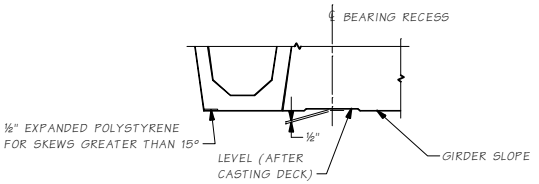

ELEVATION

BEARING RECESS AND BOTTOM FLANGE SPALL PROTECTION DETAIL

Bridge Design Engr.	M:\Standards - In Progress\Girders\TUB\TUB GIRDER DETAILS 2 OF 3.MAN				REGION NO.	STATE	FED. AID PROJ. NO.	SHEET NO.	TOTAL SHEETS	BRIDGE AND STRUCTURES OFFICE
Supervisor					10	WASH.				Washington State Department of Transportation
Designed By										STANDARD PRESTRESSED CONCRETE GIRDERS
Checked By					JOB NUMBER					TUB GIRDER DETAILS 2 OF 3
Detailed By										BRIDGE SHEET NO.
Bridge Projects Engr.										SHEET OF SHEETS
Prelim. Plan By										
Architect/Specialist	DATE	REVISION	BY	APP'D						

Wed Jul 20 10:27:56 2011

Last revised on : 7/8/2011

SHEET

FILE NO.

SR

5.6-A9-3

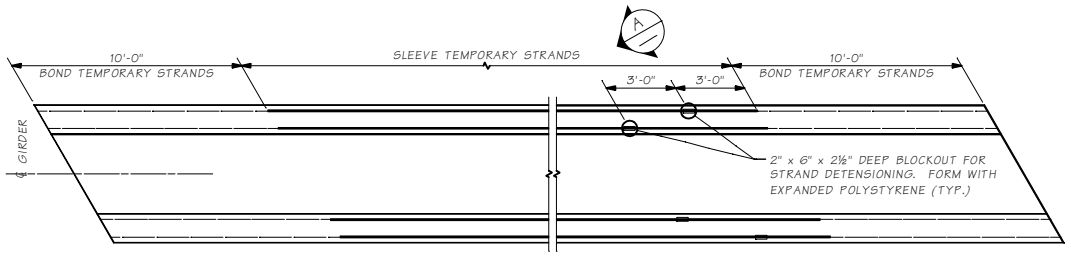

PLAN
PRETENSIONED TEMPORARY TOP STRANDS ALTERNATE

SEE "GIRDER SCHEDULE" FOR NUMBER OF TEMPORARY STRANDS REQUIRED.

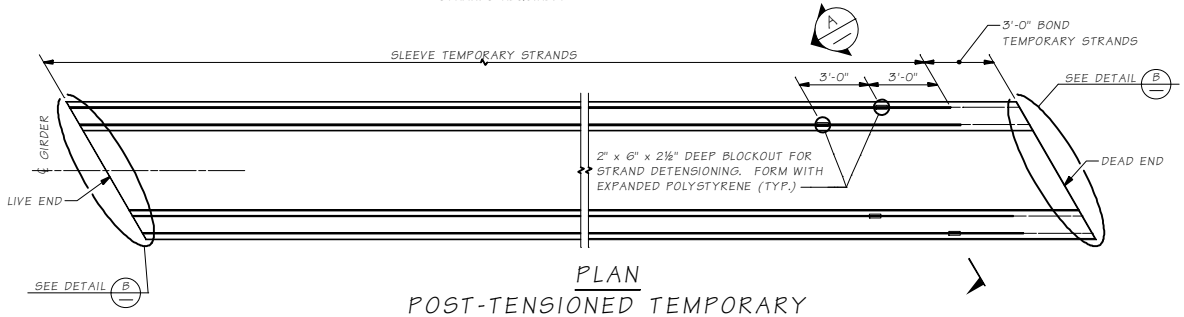

PLAN
POST-TENSIONED TEMPORARY TOP STRANDS ALTERNATE

SEE "GIRDER SCHEDULE" FOR NUMBER OF TEMPORARY STRANDS REQUIRED.

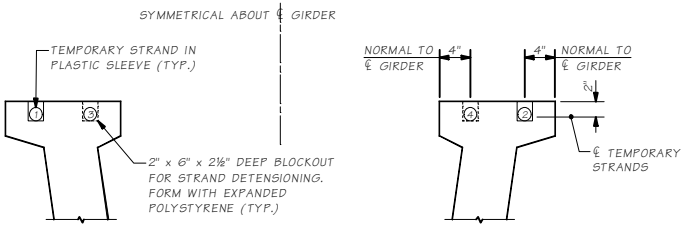

SECTION A

TEMPORARY STRAND LOCATION SEQUENCE SHALL BE AS SHOWN (1), (2) ETC.

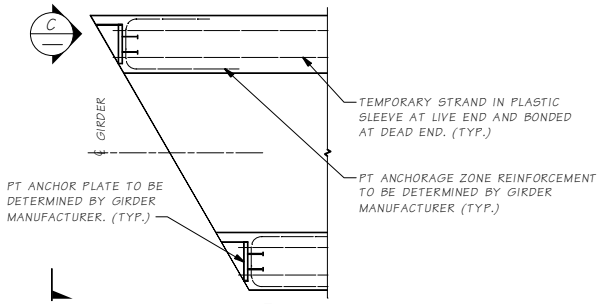

DETAIL B

LIVE END SHOWN
DEAD END SIMILAR.

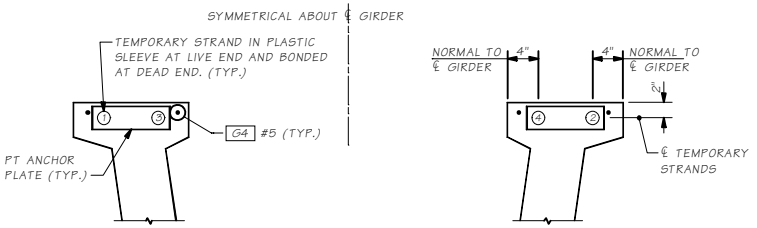

VIEW C

TEMPORARY STRAND LOCATION SEQUENCE SHALL BE AS SHOWN (1), (2) ETC.

Bridge Design Engr.	M:\Standards - In Progress\Girders\TUB\TUB GIRDER DETAILS 3 OF 3.MAN				REGION NO.	STATE	FED. AID PROJ. NO.	SHEET NO.	TOTAL SHEETS	BRIDGE AND STRUCTURES OFFICE
Supervisor					10	WASH.				Washington State Department of Transportation
Designed By					JOB NUMBER					STANDARD PRESTRESSED CONCRETE GIRDERS
Checked By										TUB GIRDER DETAILS 3 OF 3
Detailed By										BRIDGE SHEET NO.
Bridge Projects Engr.										SHEET OF SHEETS
Prelim. Plan By										
Architect/Specialist	DATE	REVISION	BY	APP'D						

Wed Jul 20 10:27:56 2011

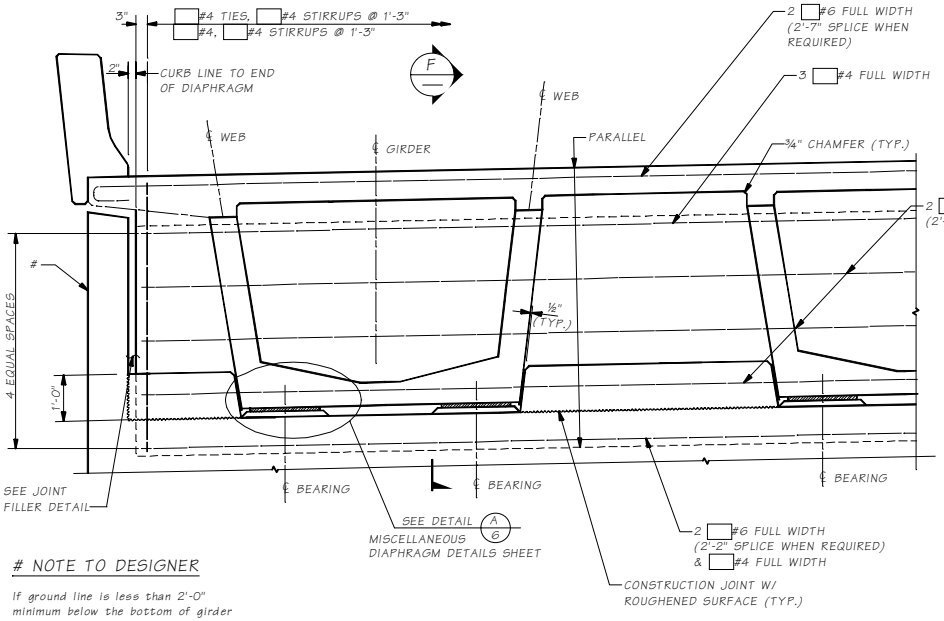

 # NOTE TO DESIGNER

If ground line is less than 2'-0" minimum below the bottom of girder at front face of abutment a curtain wall shall be provided.

TYPICAL END TYPE "A" DIAPHRAGM AT END PIERS

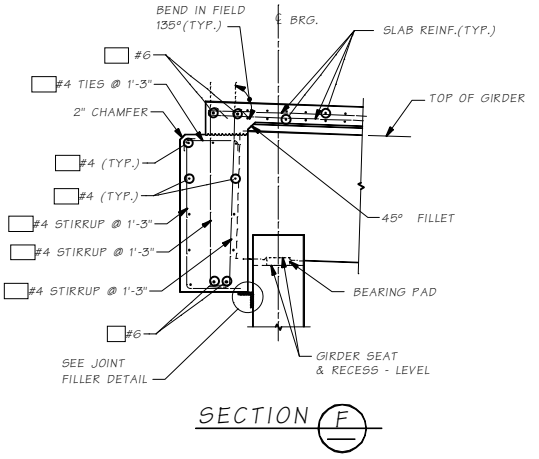

SECTION F

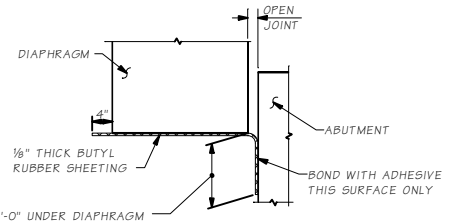

ELEVATION BUTYL RUBBER AT DIAPHRAGM

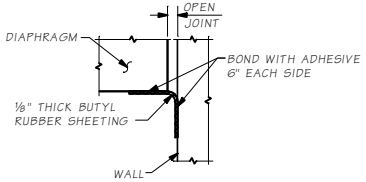

PLAN VIEW BUTYL RUBBER AT VERTICAL JOINTS

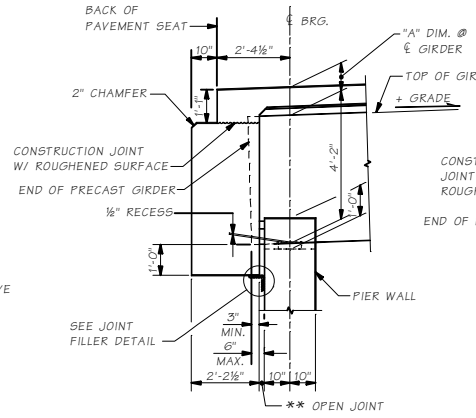

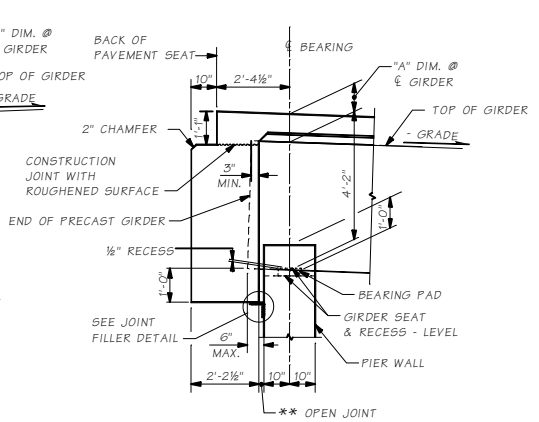

END DIAPHRAGM GEOMETRY

SECTIONS THROUGH END DIAPHRAGMS AT END PIERS
SEE "GIRDER DETAILS" SHEET FOR DIMENSION "A".
ALL LONGITUDINAL DIMENSIONS ARE NORMAL TO SKEW.

BRIDGE LENGTH	JOINT
L≤200	** = 1.5 IN.
200<L≤300	** = 2.0 IN.
300<L≤400	** = 2.5 IN.
L>400	SPECIAL DESIGN

NOTE:

1. GIRDERS SHALL BE HELD RIGIDLY IN PLACE WHEN DIAPHRAGMS ARE PLACED.
2. REINFORCING BAR SHALL BE THREADED THROUGH HOLES IN GIRDERS PRIOR TO PLACING OF EXTERIOR GIRDERS. SEE PLANS FOR "TRAFFIC BARRIER" DIMENSIONS AND LOCATION. SEE "GIRDER DETAILS" SHEET FOR DIMENSION "A".
3. END DIAPHRAGM MAY BE CAST ON GRADE. IF SO, THE UPPER LEG OF THE JOINT FILLER SHALL FORM THE BOTTOM FACE FULL WIDTH.
4. JOINT FILLER TYPE 1 SHALL BE USED TO COVER ALL VERTICAL END DIAPHRAGM JOINTS. EITHER JOINT FILLER TYPE 1 OR JOINT FILLER TYPE 2 SHALL BE USED TO COVER ALL HORIZONTAL END DIAPHRAGM JOINTS.

Bridge Design Engr.	M:\Standards - In Progress\Girders\TUB\TUB END DIAPHRAGM ON TUB.MAN				REGION NO.	STATE	FED. AID PROJ. NO.	SHEET NO.	TOTAL SHEETS
Supervisor					10	WASH.			
Designed By					JOB NUMBER				
Checked By									
Detailed By									
Bridge Projects Engr.									
Prelim. Plan By									
Architect/Specialist	DATE	REVISION	BY	APP'D					

BRIDGE AND STRUCTURES OFFICE

Washington State Department of Transportation

STANDARD PRESTRESSED CONCRETE GIRDERS

PRESTRESSED TRAPEZOIDAL TUB GIRDER END DIAPHRAGM ON GIRDER DETAILS

BRIDGE SHEET NO. | SHEET | OF | SHEETS

Last revised on : 6/23/2011

SHEET | FILE NO. | SR

5.6-A9-5

Wed Jul 20 10:27:56 2011

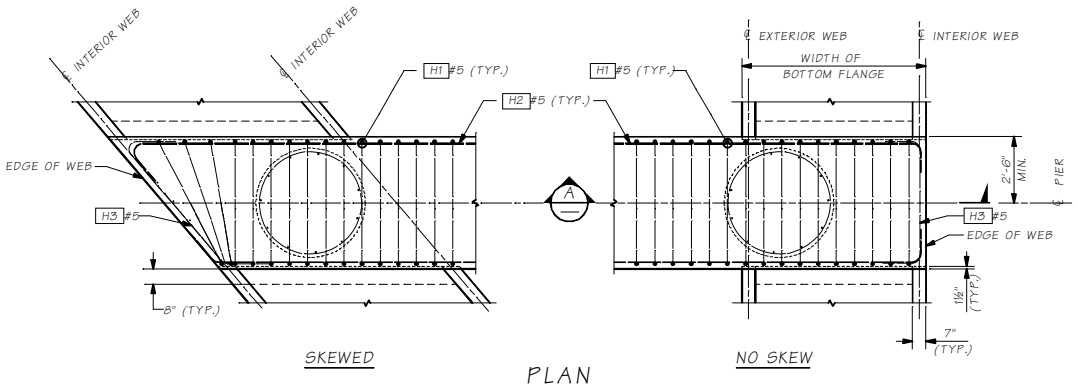

PLAN

FOR EXTENDED STRAND DETAIL SEE GIRDER SHEET 3.

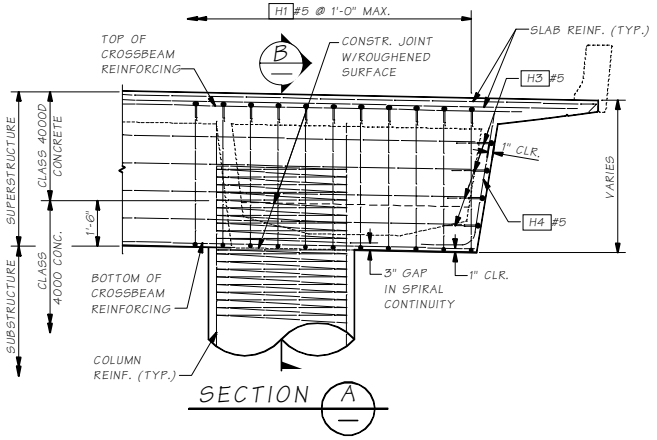

SECTION A

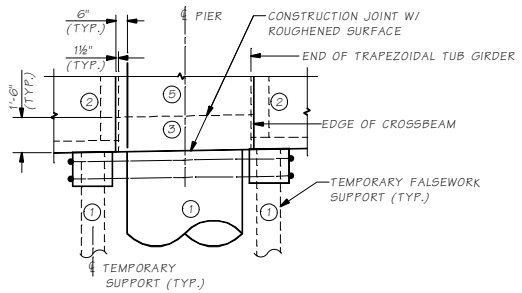

TEMPORARY SUPPORT DETAIL

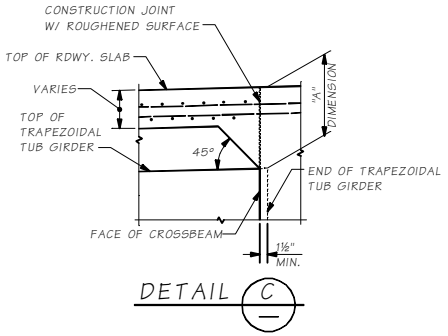

DETAIL C

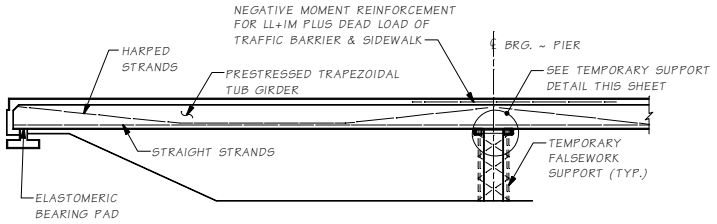

ELEVATION

CONSTRUCTION SEQUENCE

1. COLUMN & TEMP. SUPPORT
2. PLACE GIRDER ON TEMPORARY SUPPORT
3. CAST DIAPHRAGM STAGE 1
4. CAST ROADWAY SLAB
5. COMPLETE DIAPHRAGM
6. REMOVE TEMPORARY SUPPORT

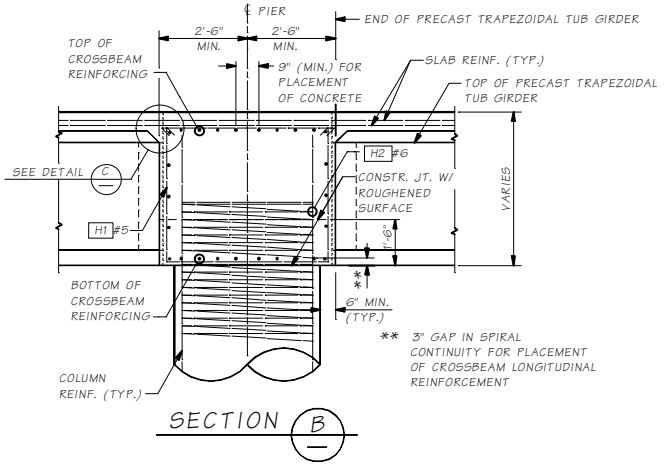

SECTION B

Bridge Design Engr.	M:\Standards - In Progress\Girders\TUB\TUB RAISED CROSSBEAM.MAN				REGION NO.	STATE	FED. AID PROJ. NO.	SHEET NO.	TOTAL SHEETS
Supervisor					10	WASH.			
Designed By					JOB NUMBER				
Checked By									
Detailed By									
Bridge Projects Engr.									
Prelim. Plan By									
Architect/Specialist	DATE	REVISION	BY	APP'D					

BRIDGE AND STRUCTURES OFFICE

Washington State Department of Transportation

STANDARD PRESTRESSED CONCRETE GIRDERS

PRESTRESSED TRAPEZOIDAL TUB GIRDER RAISED CROSSBEAM DETAILS

BRIDGE SHEET NO.

SHEET OF SHEETS

FILE NO. SHEET

SR 5.6-A9-6

Last revised on : 7/20/2011

Wed Jul 20 10:27:56 2011

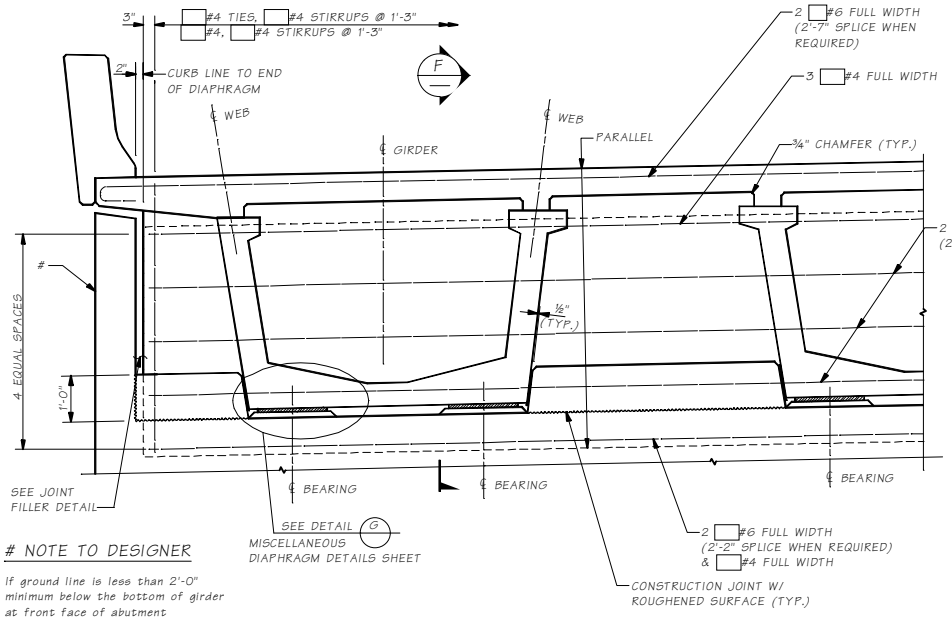

 # NOTE TO DESIGNER

If ground line is less than 2'-0" minimum below the bottom of girder at front face of abutment a curtain wall shall be provided.

TYPICAL END TYPE "A" DIAPHRAGM AT END PIERS

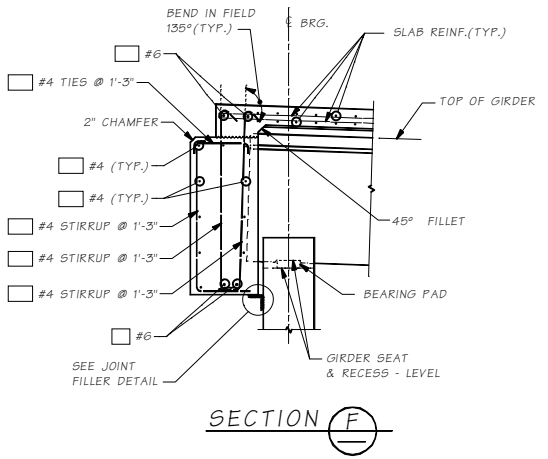

SECTION F

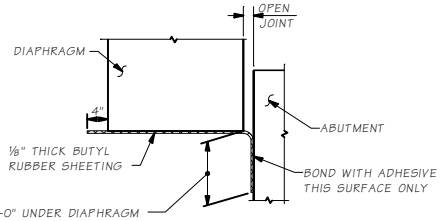

ELEVATION BUTYL RUBBER AT DIAPHRAGM

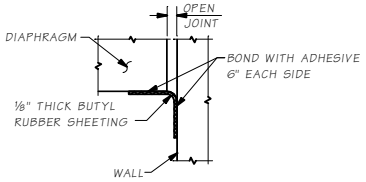

PLAN VIEW BUTYL RUBBER AT VERTICAL JOINTS

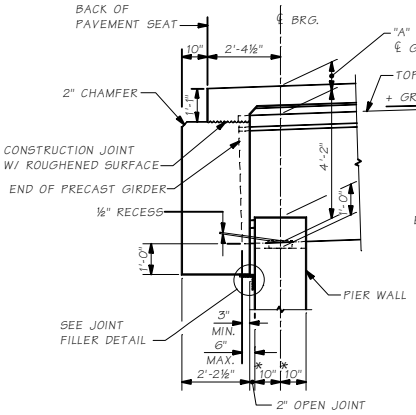

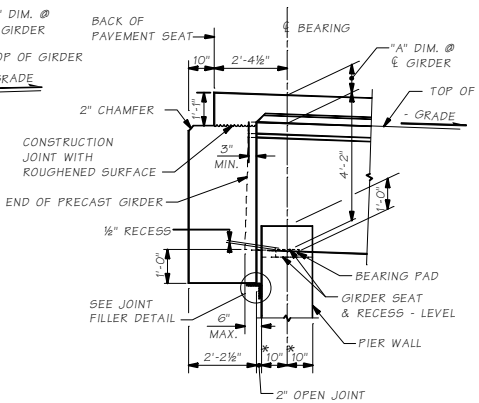

END DIAPHRAGM GEOMETRY

SECTIONS THROUGH END DIAPHRAGMS AT END PIERS
SEE "GIRDER DETAILS" SHEET FOR DIMENSION "A".
ALL LONGITUDINAL DIMENSIONS ARE NORMAL TO SKEW.

* TO BE INCREASED AS NECESSARY

BRIDGE LENGTH	JOINT
L≤200	** = 1.5 IN.
200<L≤300	** = 2.0 IN.
300<L≤400	** = 2.5 IN.
L>400	SPECIAL DESIGN

NOTE:

1. GIRDERS SHALL BE HELD RIGIDLY IN PLACE WHEN DIAPHRAGMS ARE PLACED.
2. REINFORCING BAR SHALL BE THREADED THROUGH HOLES IN GIRDERS PRIOR TO PLACING OF EXTERIOR GIRDERS. SEE PLANS FOR "TRAFFIC BARRIER" DIMENSIONS AND LOCATION. SEE "GIRDER DETAILS" SHEET FOR DIMENSION "A".
3. END DIAPHRAGM MAY BE CAST ON GRADE. IF SO, THE UPPER LEG OF THE JOINT FILLER SHALL FORM THE BOTTOM FACE FULL WIDTH.
4. JOINT FILLER TYPE 1 SHALL BE USED TO COVER ALL VERTICAL END DIAPHRAGM JOINTS. EITHER JOINT FILLER TYPE 1 OR JOINT FILLER TYPE 2 SHALL BE USED TO COVER ALL HORIZONTAL END DIAPHRAGM JOINTS.

Bridge Design Engr.	M:\Standards - In Progress\Girders\TUB\SIP TUB END DIAPHRAGM ON TUB.MAN			
Supervisor				
Designed By				
Checked By				
Detailed By				
Bridge Projects Engr.				
Prelim. Plan By				
Architect/Specialist	DATE	REVISION	BY	APP'D

REGION NO.	STATE	FED. AID PROJ. NO.	SHEET NO.	TOTAL SHEETS
10	WASH.			
JOB NUMBER				

BRIDGE AND STRUCTURES OFFICE

Washington State Department of Transportation

STANDARD PRESTRESSED CONCRETE GIRDERS

TRAPEZOIDAL TUB S-I-P DECK PANEL GIRDER END DIAPHRAGM ON GIRDER DETAILS

BRIDGE SHEET NO.

SHEET OF SHEETS

Last revised on : 7/20/2011

SHEET

FILE NO. SR 5.6-A9-7

Wed Jul 20 10:27:57 2011

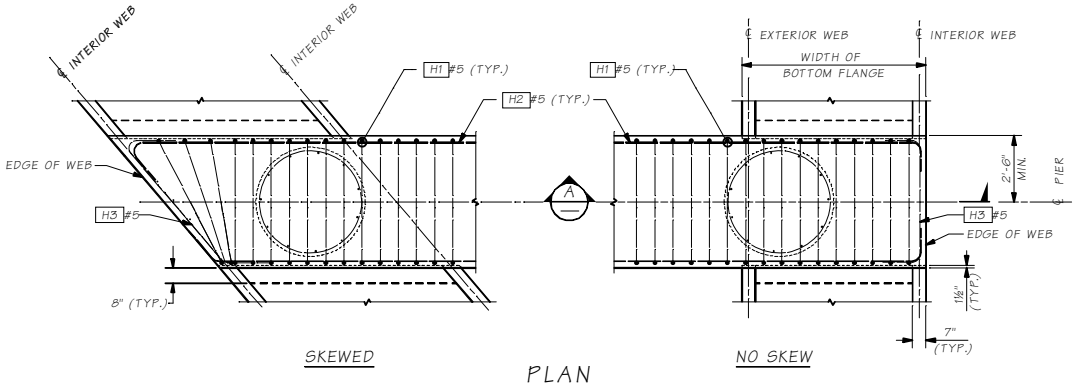

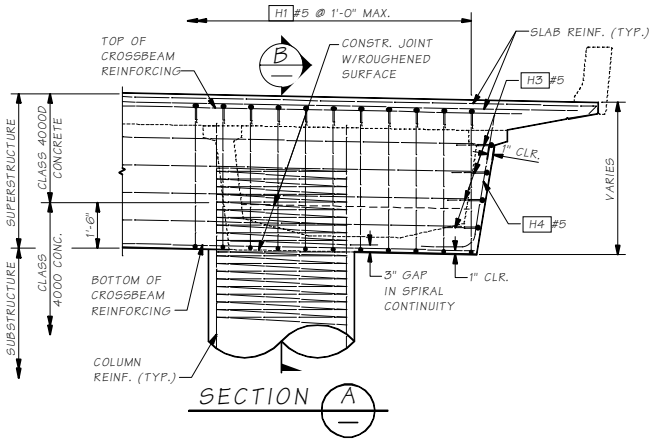

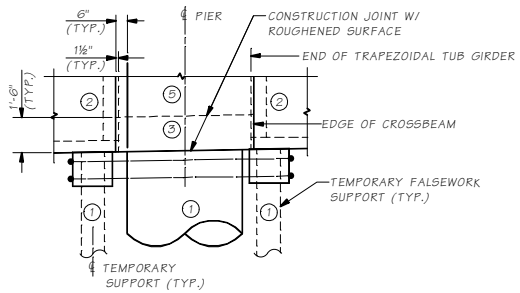

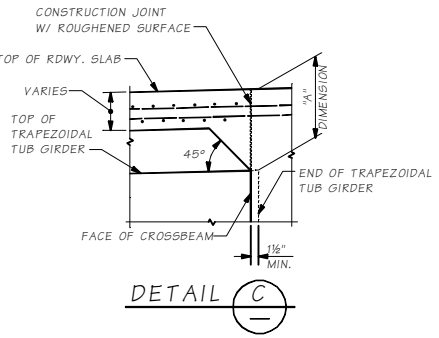

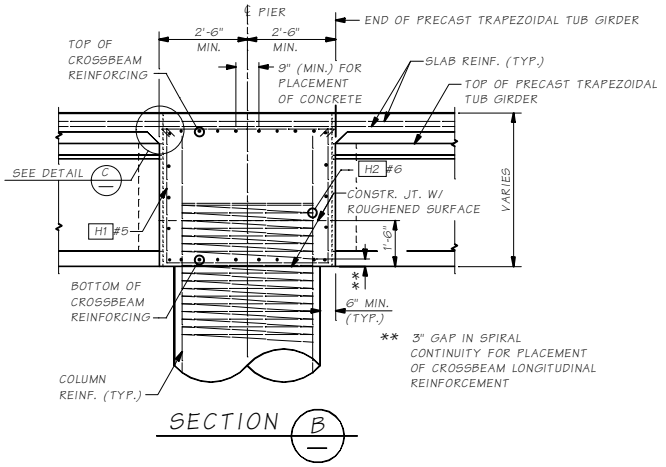

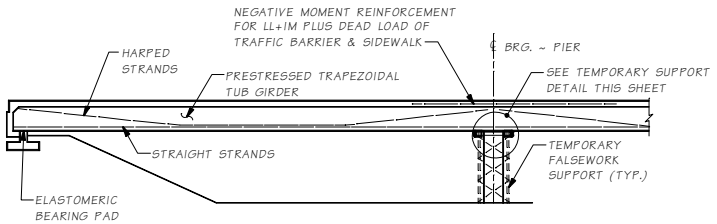

CONSTRUCTION SEQUENCE

1. COLUMN & TEMP. SUPPORT
2. PLACE GIRDER ON TEMPORARY SUPPORT
3. CAST DIAPHRAGM STAGE 1
4. CAST ROADWAY SLAB
5. COMPLETE DIAPHRAGM
6. REMOVE TEMPORARY SUPPORT

Bridge Design Engr.	M:\Standards - In Progress\Girders\TUB\SIP TUB RAISED CROSSBEAM.MAN				REGION NO.	STATE	FED. AID PROJ. NO.	SHEET NO.	TOTAL SHEETS
Supervisor					10	WASH.			
Designed By									
Checked By									
Detailed By					JOB NUMBER				
Bridge Projects Engr.									
Prelim. Plan By									
Architect/Specialist	DATE	REVISION	BY	APP'D					

BRIDGE AND STRUCTURES OFFICE

Washington State Department of Transportation

STANDARD PRESTRESSED CONCRETE GIRDERS

TRAPEZOIDAL TUB S-I-P DECK PANEL GIRDER RAISED CROSSBEAM DETAILS

BRIDGE SHEET NO.

SHEET OF SHEETS

Last revised on : 7/20/2011

SHEETS NO. ELE SR

5.6-A9-8

Wed Jul 20 10:27:57 2011

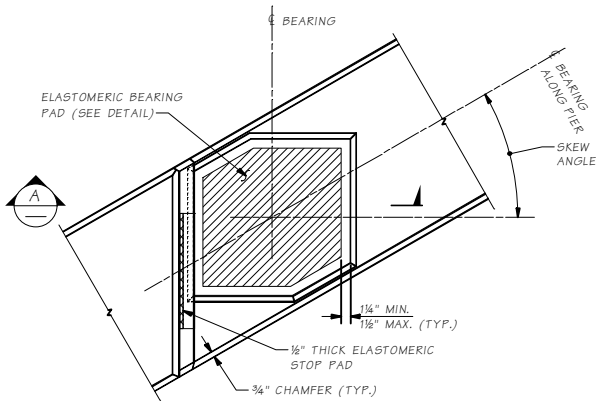

GROUT PAD DETAIL

GIRDER NOT SHOWN FOR CLARITY

Skew angle shown at 30°.

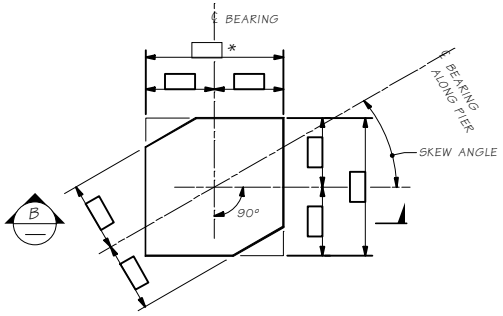

ELASTOMERIC BEARING PAD

LAMINATED ELASTOMERIC BEARING PAD (☐ SHIMS)

Skew angle shown at 30°.

* The edge of the bearing pad shall be set at 1" from the edge of the girder.

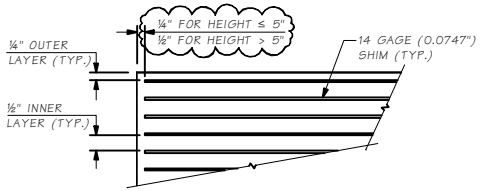

SECTION B

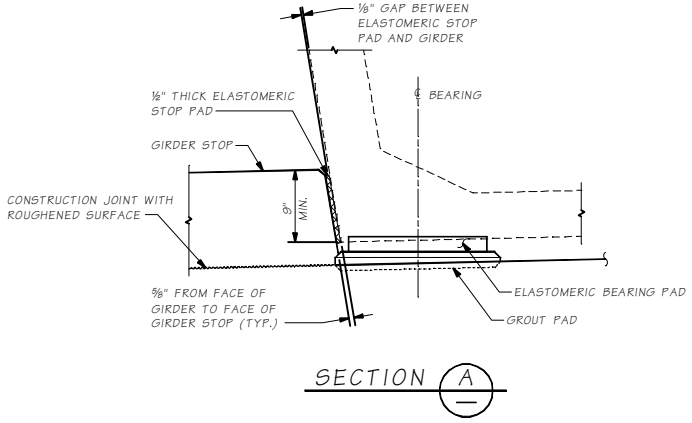

SECTION A

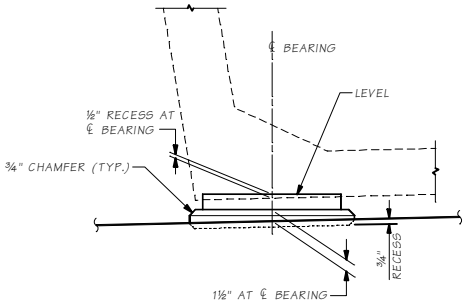

GROUT PAD ELEVATION

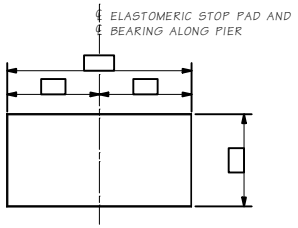

ELASTOMERIC STOP PAD

SHEAR MODULUS = 165 PSI

BEARING DESIGN TABLE AASHTO METHOD B DESIGN	
SERVICE - I LIMIT STATE	
DEAD LOAD (DL) REACTION	KIPS
LIVE LOAD REACTION (W/O IMPACT)	KIPS
UNLOADED HEIGHT	IN
LOADED HEIGHT (DL)	IN
SHEAR MODULUS	165 PSI

NOTES:

1. GIRDER STOPS SHALL BE CONSTRUCTED AFTER GIRDER PLACEMENT.
2. THE ELASTOMERIC STOP PADS SHALL BE CEMENTED TO GIRDER STOPS WITH APPROVED ADHESIVE.

Bridge Design Engr.	M:\Standards - In Progress\Girders\TUB\TUB BEARING DETAILS.MAN				REGION NO.	STATE	FED. AID PROJ. NO.	SHEET NO.	TOTAL SHEETS	BRIDGE AND STRUCTURES OFFICE
Supervisor					10	WASH.				Washington State Department of Transportation
Designed By										STANDARD PRESTRESSED CONCRETE GIRDERS
Checked By					JOB NUMBER					TRAPEZOIDAL TUB GIRDER BEARING DETAILS
Detailed By										BRIDGE SHEET NO.
Bridge Projects Engr.										SHEET OF SHEETS
Prelim. Plan By										
Architect/Specialist	DATE	REVISION	BY	APP'D						

Wed Jul 20 10:27:57 2011

Last revised on : 7/20/2011

SHEETS NO. ELE SR

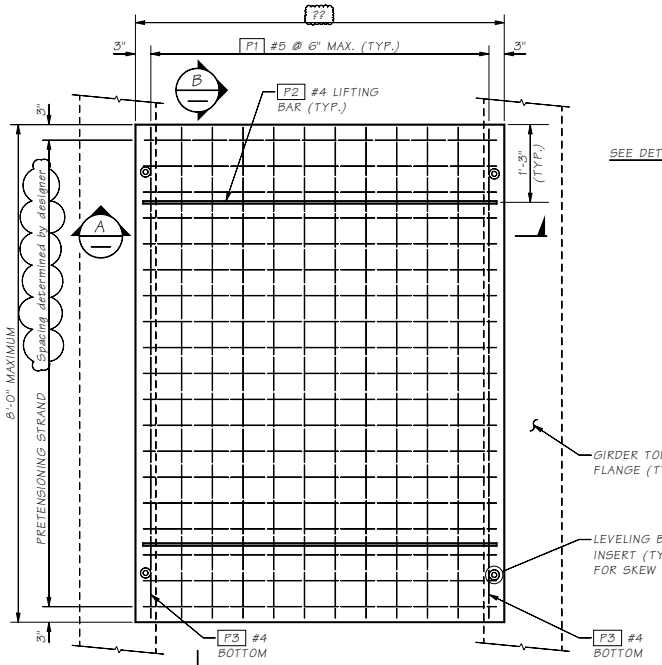

PLAN
SIP DECK PANEL

ADJACENT PANELS NOT SHOWN FOR CLARITY

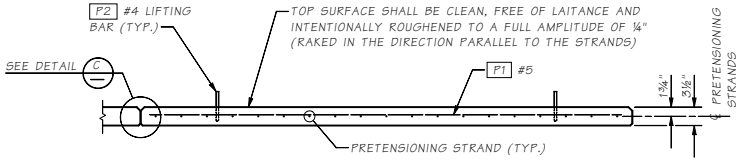

SECTION B

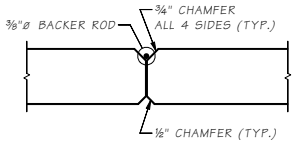

DETAIL C

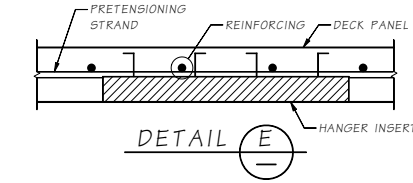

DETAIL E

* COOPER B-LINE B22-1-??, POWERSTRUT PS 349-??, UNISTRUT P32??, OR APPROVED EQUAL (TYP.) WITH SPRING NUT. CHASE THREADS ON HANGER ROD FOR THREAD COMPATIBILITY WITH SPRING NUT. INSERT TO BE INSTALLED LEVEL LONGITUDINALLY AND TRANSVERSELY. PLACE INSERT TO PROVIDE FOR TRANSVERSE ADJUSTMENT OF HANGER RODS. HANGER RODS SHALL NOT BE WITHIN 2" OF THE END OF THE INSERT. FOR INSERT LOCATIONS, SEE "UTILITIES HANGER DETAILS" SHEET.

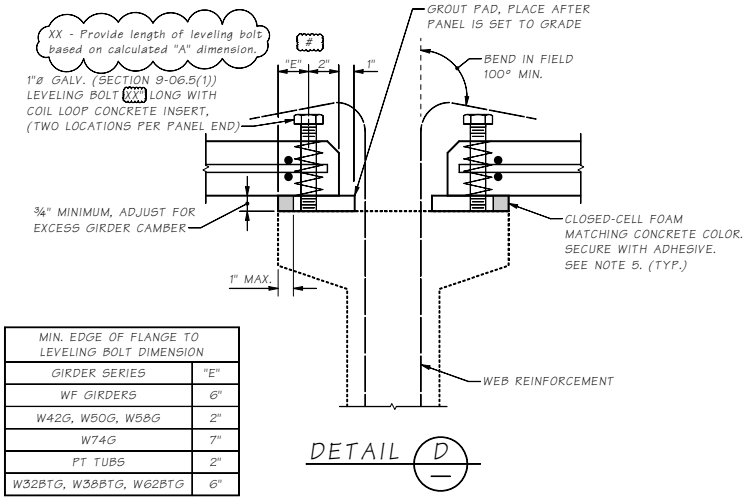

DETAIL D

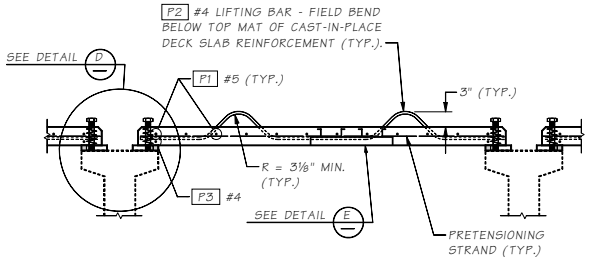

SECTION A

DIMENSIONS SHOWN ARE NORMAL TO ℄ GIRDER

MIN. EDGE OF FLANGE TO LEVELING BOLT DIMENSION	
GIRDER SERIES	"E"
WF GIRDERS	6"
W42G, W50G, W58G	2"
W74G	7"
PT TUBS	2"
W32BTG, W38BTG, W62BTG	6"

NOTES:

1. PRETENSIONING STRANDS, LEVELING BOLTS AND GROUT FOR GROUT PAD UNDER SIP DECK PANELS SHALL BE AS SPECIFIED IN THE SPECIAL PROVISIONS.
2. LOOSEN THE LEVELING BOLT BY TWO TURNS AFTER THE GROUT HAS REACHED THE DESIGN STRENGTH SPECIFIED IN SECTION 9-20.3(2). LEVELING BOLT SHALL BE GALVANIZED AFTER FABRICATION IN ACCORDANCE WITH AASHTO M232.
3. FOR SKEWED END PANELS, ADJUST THE LEVELING BOLT LOCATIONS LONGITUDINALLY ALONG THE ℄ OF GIRDER, SUCH THAT EACH PANEL WILL HAVE 4 BOLTS AFTER THE PANEL IS SAWCUT. THE PANEL MAY BE CAST SQUARE AND SAWCUT TO FIT THE PLAN SKEW.
4. THE CONTRACTOR MAY SUBMIT FOR APPROVAL ALTERNATE LIFT POINT LOCATIONS, LIFTING EMBEDMENTS AND DEVICES IN ACCORDANCE WITH SECTION 6-02.3(28)G. LIFT POINT LOCATIONS AND LIFTING EMBEDMENTS AND DEVICES SHALL BE SHOWN ON THE SHOP PLANS SUBMITTED FOR APPROVAL. DESIGN CALCULATIONS SHALL BE SUBMITTED WITH THE SHOP PLANS.
5. THE CONTRACTOR MAY SUBMIT AN ALTERNATE METHOD FOR FORMING GROUT PAD UNDER SIP DECK PANEL AT EXTERIOR FACE OF GIRDER FLANGE. REFER ALSO TO SPECIAL PROVISIONS.

UTILITY HANGER NOTES TO DESIGNERS:
- Verify that the insert does not interfere with reinforcement. Insert shall be centered between pretensioning strand.
- Verify that the load on the insert and rod is acceptable.
- The first utility insert shall be placed within 2'-0" of the end diaphragms.
- See BDM chapter 10, section 10.8.6 for insert design.

NOTES TO DESIGNERS:
Provide enough deck panel overlap on girder flange to accommodate fabrication tolerances for the girder and deck panel, while still maintaining a sufficient bearing seat. The girder flange and deck panel shall be checked for structural adequacy.
- The minimum deck thickness shall be 8½" with 5" concrete cast-in-place topping.

MIN. CONC. COMP. STRENGTH		STRANDS	
@ 28 DAYS F'C (KSI)	@ RELEASE F'CI (KSI)	DIAMETER (IN)	JACKING FORCE PER STRAND (KIPS)
		⅜" OR 7/16"	

Last revised on : 04/09/2010

SHEETS NO. BOX RS

5.6-A10-1

Fri Sep 03 08:42:29 2010

Bridge Design Engr.	M:\STANDARDS\Girders\SIP Deck Panel\SIP Deck Panel.MAN								
Supervisor					REGION NO.	STATE	FED. AID PROJ. NO.	SHEET NO.	TOTAL SHEETS
Designed By					10	WASH.			
Checked By					JOB NUMBER				
Detailed By									
Bridge Projects Engr.									
Prelim. Plan By									
Architect/Specialist	DATE	REVISION	BY	APPD					

BRIDGE AND STRUCTURES OFFICE

Washington State Department of Transportation

STANDARD PRESTRESSED CONCRETE GIRDERS

STAY-IN-PLACE (SIP) DECK PANEL DETAILS

BRIDGE SHEET NO. 0 SHEET OF SHEETS

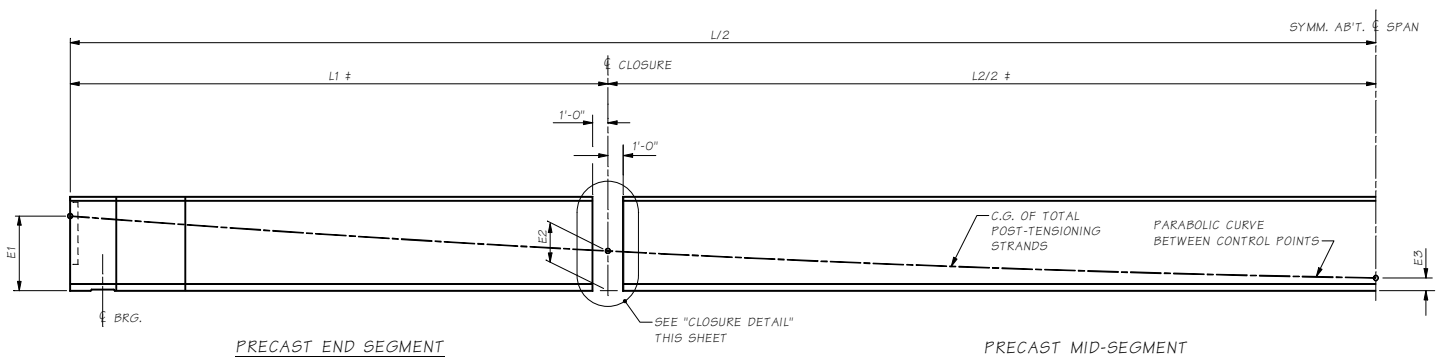

PRECAST END SEGMENT

PRECAST MID-SEGMENT

PRECAST LONGITUDINAL HALF-SECTION

SHOWING POST-TENSIONING CABLE PATHS
± MEASURED BEFORE POST-TENSIONING.

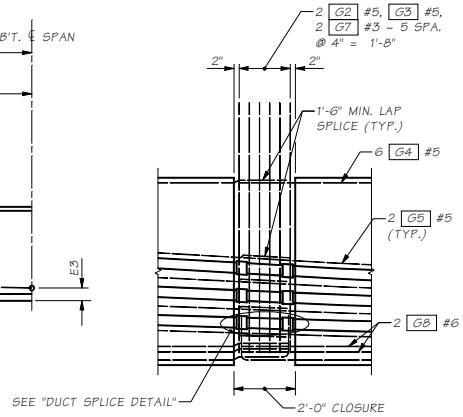

CLOSURE DETAIL

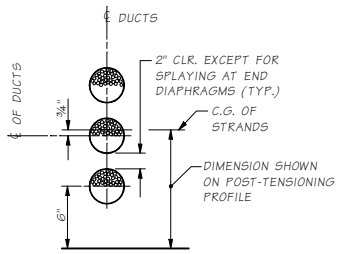

TENDON IN SAG CURVE

STRAND LOCATION DETAIL

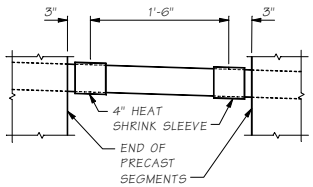

DUCT SPLICE DETAIL

POST-TENSIONING TABLE

SPAN	GIRDER	MIN. CONC. COMPRESSIVE STRENGTH (KSI)		NUMBER OF STRANDS	PRESTRESSING LOAD (KIPS)		TOTAL PRESTRESS LOSS (KSI)	E1 (IN.)	E2 (IN.)	E3 (IN.)	TEMPORARY STRANDS	
		GIRDER	CLOSURE		JACKING	AFTER SEATING					NUMBER OF STRANDS	JACKING FORCE (KIPS)

POST-TENSIONING NOTES

1. THE MINIMUM COMPRESSIVE STRENGTH OF THE CAST-IN-PLACE CONCRETE AT THE CLOSURE AT THE TIME OF POST-TENSIONING SHALL BE AS SHOWN IN POST-TENSIONING TABLE.
2. THE MAXIMUM OUTSIDE DIAMETER OF THE DUCT SHALL BE ??? INCHES. THE AREA OF THE DUCT SHALL BE AT LEAST 2.5 TIMES THE NET AREA OF THE PRESTRESSING STEEL IN THE DUCT.
3. THE DESIGN IS BASED ON [½"ø OR 0.6"ø] LOW RELAXATION STRANDS WITH AN ANCHOR SET OF ⅜", A CURVATURE FRICTION COEFFICIENT, μ = 0.20 AND A WOBBLE FRICTION COEFFICIENT, k = 0.0002/FT. THE ACTUAL ANCHOR SET AND JACKING FORCE USED BY THE CONTRACTOR SHALL BE SPECIFIED IN THE SHOP PLANS AND INCLUDED IN THE TRANSFER FORCE CALCULATIONS.
4. THE DESIGN IS BASED ON THE ESTIMATED PRESTRESS LOSS OF POST-TENSIONING STRANDS SHOWN IN THE POST-TENSIONING TABLE DUE TO STEEL RELAXATION, ELASTIC SHORTENING CREEP AND SHRINKAGE OF CONCRETE.
5. THE CONTRACTOR SHALL SUBMIT THE STRESSING SEQUENCE AND ELONGATION CALCULATIONS TO THE ENGINEER FOR APPROVAL. ALL LOSSES DUE TO TENDON VERTICAL AND HORIZONTAL CURVATURE MUST BE INCLUDED IN ELONGATION CALCULATIONS. THE STRESSING SEQUENCE SHALL MEET THE FOLLOWING CRITERIA:
   A. THE PRESTRESSING FORCE SHALL BE DISTRIBUTED WITH AN APPROXIMATELY EQUAL AMOUNT IN EACH WEB AND SHALL BE PLACED SYMMETRICALLY ABOUT THE CENTERLINE OF THE BRIDGE.
   B. NO MORE THAN ONE-HALF OF THE PRESTRESSING FORCE IN ANY WEB MAY BE STRESSED BEFORE AN EQUAL FORCE IS STRESSED IN THE ADJACENT WEBS. AT NO TIME DURING STRESSING OPERATION WILL MORE THAN 1/6 OF THE TOTAL PRESTRESSING FORCE IS APPLIED ECCENTRICALLY ABOUT THE CENTERLINE OF THE BRIDGE.
6. ALL TENDONS SHALL BE STRESSED FROM ONE END.
7. TEMPORARY STRANDS SHALL BE POST-TENSIONED IN ACCORDANCE WITH SECTION 6-02.3(25)L OF THE STANDARD SPECIFICATIONS. TEMPORARY STRANDS MAY BE POST-TENSIONED ON THE SAME DAY THE PRETENSIONING IS RELEASED INTO THE GIRDER.

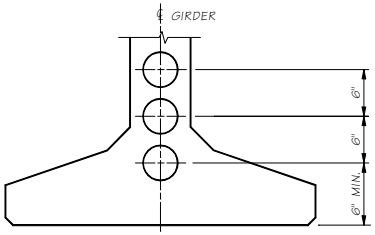

POST-TENSIONING
STRAND PATTERN AT ℄ SPAN

SHEET
JOB NO.
SR 5.9-A1-1

Bridge Design Engr.	M:\STANDARDS\Girders\PT Wide Flange\WF74PTG1.MAN				REGION NO.	STATE	FED. AID PROJ. NO.	SHEET NO.	TOTAL SHEETS	BRIDGE AND STRUCTURES OFFICE
Supervisor					10	WASH.				Washington State Department of Transportation
Designed By					JOB NUMBER					STANDARD PRESTRESSED CONCRETE GIRDERS
Checked By										WF74PTG SPLICED GIRDER DETAILS 1 OF 5
Detailed By										BRIDGE SHEET NO. SHEET OF SHEETS
Bridge Projects Engr.										
Prelim. Plan By										
Architect/Specialist	DATE	REVISION	BY	APP'D						

Fri Sep 10 08:30:02 2010

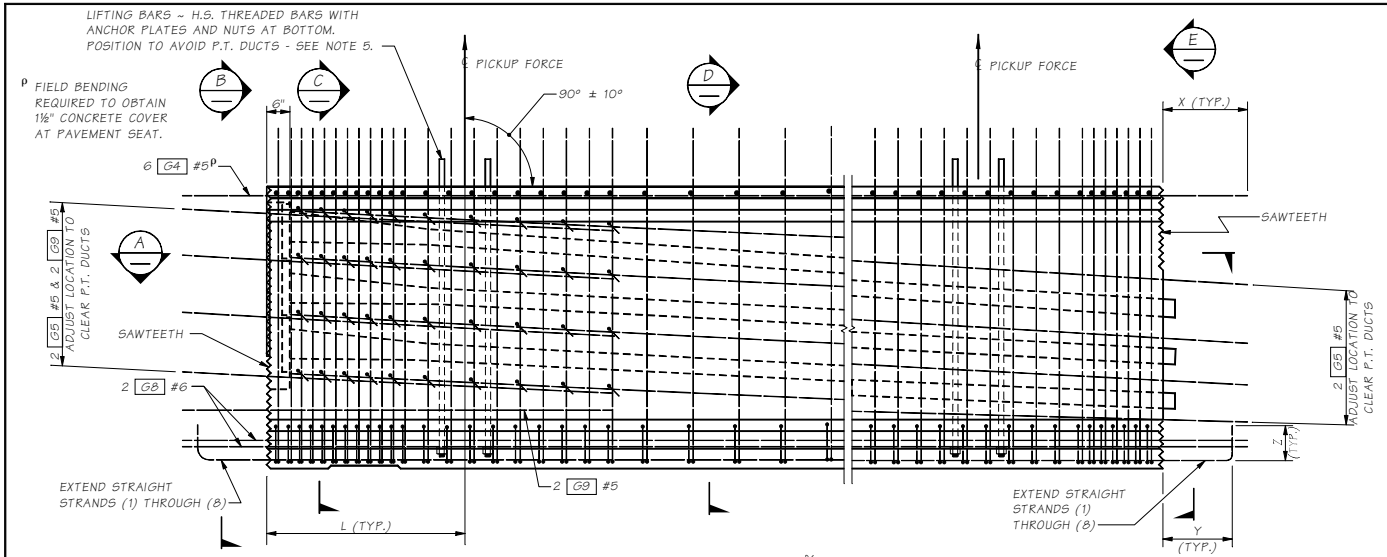

TYPICAL ELEVATION AT END SEGMENT

END TYPE A SHOWN, OTHER END TYPES SIMILAR

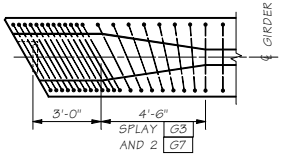

TYPICAL END ELEVATION AT CLOSURE

PRE-TENSIONING NOTES

1. PLAN LENGTH SHALL BE INCREASED AS NECESSARY TO COMPENSATE FOR SHORTENING DUE TO PRESTRESS AND SHRINKAGE.
2. ALL PRETENSIONED AND TEMPORARY STRANDS SHALL BE [½"ø OR 0.6"ø] LOW RELAXATION STRANDS (AASHTO M203 GRADE 270.)
3. FOR END TYPES A, C, D AND E CUT ALL STRANDS FLUSH WITH THE GIRDER ENDS AND PAINT WITH AN APPROVED EPOXY RESIN, EXCEPT FOR EXTENDED STRANDS AS SHOWN. FOR END TYPE B CUT ALL STRANDS 1" BELOW CONCRETE SURFACE AND GROUT WITH AN APPROVED EPOXY GROUT.
4. THE TOP SURFACE OF THE GIRDER FLANGE SHALL BE ROUGHENED IN ACCORDANCE WITH SECTION 6-02.3(25)H OF THE STANDARD SPECIFICATIONS.
5. LIFTING EMBEDMENTS SHALL BE INSTALLED IN ACCORDANCE WITH SECTION 6-02.3(25)L OF THE STANDARD SPECIFICATIONS. CONTRACTOR TO DESIGN OTHER LIFTING MECHANISM IF THE GIRDER SECTION WEIGHT EXCEEDS 200 KIPS.
6. CAUTION SHALL BE EXERCISED IN HANDLING AND PLACING GIRDERS. ALL GIRDERS SHALL BE CHECKED BY THE CONTRACTOR TO ENSURE THAT THEY ARE BRACED ADEQUATELY TO PREVENT TIPPING AND TO CONTROL LATERAL BENDING DURING SHIPPING. ONCE ERECTED, ALL GIRDERS SHALL BE BRACED LATERALLY TO PREVENT TIPPING UNTIL THE DIAPHRAGMS ARE CAST AND CURED.
7. FORMS FOR BEARING PAD RECESSES SHALL BE CONSTRUCTED AND FASTENED IN SUCH A MANNER AS TO NOT CAUSE DAMAGE TO THE GIRDER DURING THE STRAND RELEASE OPERATION.

TRANSVERSE REINFORCING AT SKEWED ENDS

ONLY TRANSVERSE REINFORCING SHOWN

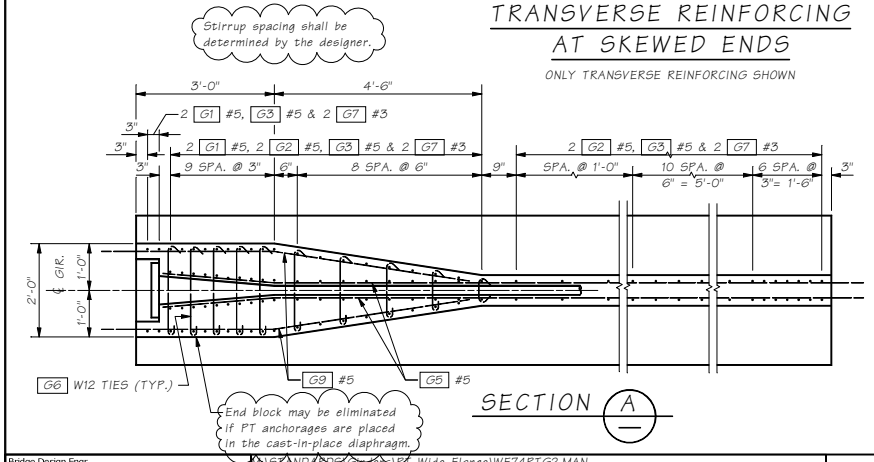

SECTION A

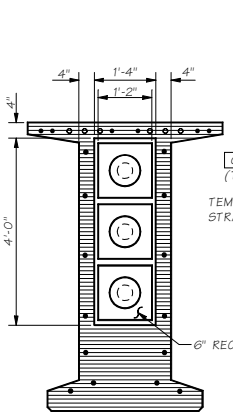

VIEW B

SAWTEETH SHOWN BY HATCHED AREA.

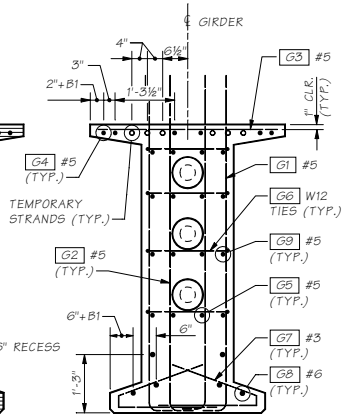

SECTION C

FOR "B1" SEE GIRDER DETAILS 3 OF 5

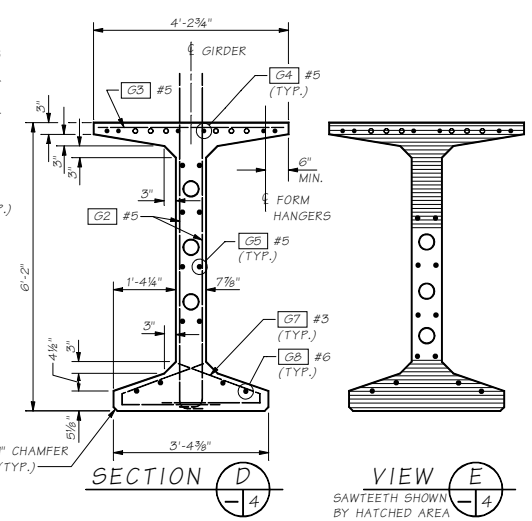

SECTION D

VIEW E

SAWTEETH SHOWN BY HATCHED AREA

Bridge Design Engr.	M:\STANDARDS\Girders\PT Wide Flange\WF74PTG2.MAN				REGION NO.	STATE	FED. AID PROJ. NO.	SHEET NO.	TOTAL SHEETS
Supervisor					10	WASH.			
Designed By					JOB NUMBER				
Checked By									
Detailed By									
Bridge Projects Engr.									
Prelim. Plan By									
Architect/Specialist	DATE	REVISION	BY	APPD					

Fri Sep 10 08:30:02 2010

BRIDGE AND STRUCTURES OFFICE

Washington State Department of Transportation

STANDARD PRESTRESSED CONCRETE GIRDERS

WF74PTG SPLICED GIRDER DETAILS 2 OF 5

BRIDGE SHEET NO. — SHEET — OF — SHEETS

SR — SHEET NO. — JOB NO.

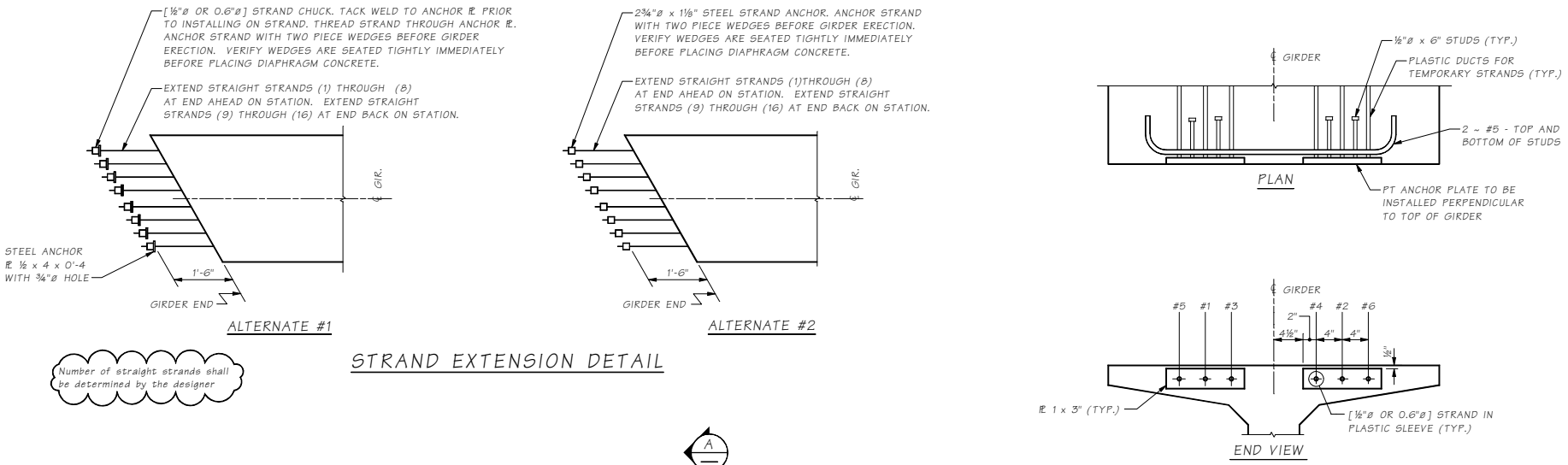

Diaphragm Type	END TYPE	BEARING RECESS	X	Y	Z	SAWTEETH
End Diaph. on Girder	A	YES	1'-10"	1'-6"	9"	YES
"L" Abutment	B	YES	0"	0"	0"	NO
Hinge Diaph. @ Intermediate Pier	C	NO	1'-10"	1'-6"	9"	YES
Fixed Diaph. @ Intermediate Pier	D	NO	1'-10"	ALT. 1 OR ALT. 2 STRAND EXTENTION		YES
Spliced girder closure pour	E	NO	1'-10"	1'-6"	9"	YES

FOR END TYPES "C" AND "E" ONLY

ENDS AHEAD ON STATION
B1 = 0" (G4 , G8)
ENDS BACK ON STATION
B1 = 1½"(G4 , G8)

MARK	LOCATION	SIZE	
G1	GIRDER STIRRUPS	5	
G2	GIRDER END STIRRUPS	5	
G3	GIRDER TOP FLANGE	5	STR.
G4	GIRDER LONGIT. FULL LENGTH	5	STR.
G5	GIRDER LONGIT.	5	STR.
G6	GIRDER END TIES	W12δ	
G7β	GIRDER BOT. FLANGE TIES	3	
G8	GIRDER LONGIT.	6	STR.
G9	GIRDER END LONGIT.	5	
G11β	GIRDER BOT. FLANGE TIES	3	
G12β	GIRDER BOT. FLANGE TIES	3	

BENDING DIAGRAM (ALL DIMENSIONS ARE OUT TO OUT)
NOTE: FOR DIMENSION "A", SEE "GIRDER SCHEDULE"

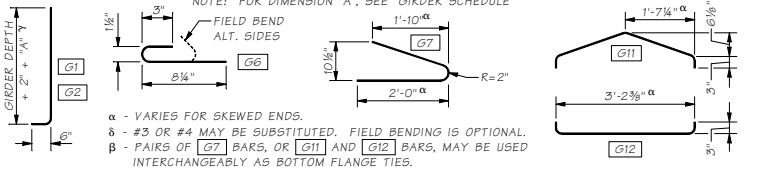

α - VARIES FOR SKEWED ENDS.
δ - #3 OR #4 MAY BE SUBSTITUTED. FIELD BENDING IS OPTIONAL.
β - PAIRS OF G7 BARS, OR G11 AND G12 BARS, MAY BE USED INTERCHANGEABLY AS BOTTOM FLANGE TIES.
γ - SHALL BE CHECKED FOR EFFECT OF VERTICAL CURVE.

Bridge Design Engr.	M:\STANDARDS\Girders\FT Wide Flange\WF-PTG3.MAN								
Supervisor					REGION NO.	STATE	FED. AID PROJ. NO.	SHEET NO.	TOTAL SHEETS
Designed By					10	WASH.			
Checked By					JOB NUMBER				
Detailed By									
Bridge Projects Engr.									
Prelim. Plan By									
Architect/Specialist	DATE	REVISION	BY	APPD					

BRIDGE AND STRUCTURES OFFICE

Washington State Department of Transportation

STANDARD PRESTRESSED CONCRETE GIRDERS

SPLICED GIRDER DETAILS 3 OF 5

BRIDGE SHEET NO. SHEET OF SHEETS

JOB NO. SHEET SR 5.9-A1-3

Fri Sep 10 08:30:02 2010

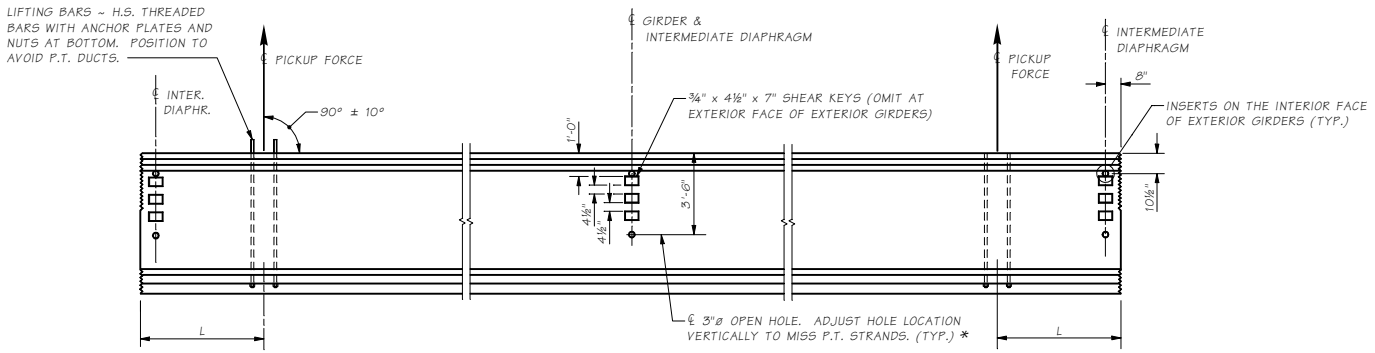

GIRDER ELEVATION
MID-SEGMENT

* OMIT HOLES AND PLACE INSERTS ON THE INTERIOR FACE OF EXTERIOR GIRDERS. PLACE HOLES AND INSERTS PARALLEL TO SKEW. INSERTS SHALL BE 1"ø BURKE HI-TENSILE, LANCASTER MALLEABLE, DAYTON-SUPERIOR F-62 FLARED THIN SLAB (1" x 4⅝") FERRULE INSERT OR APPROVED EQUAL. (TYP.)

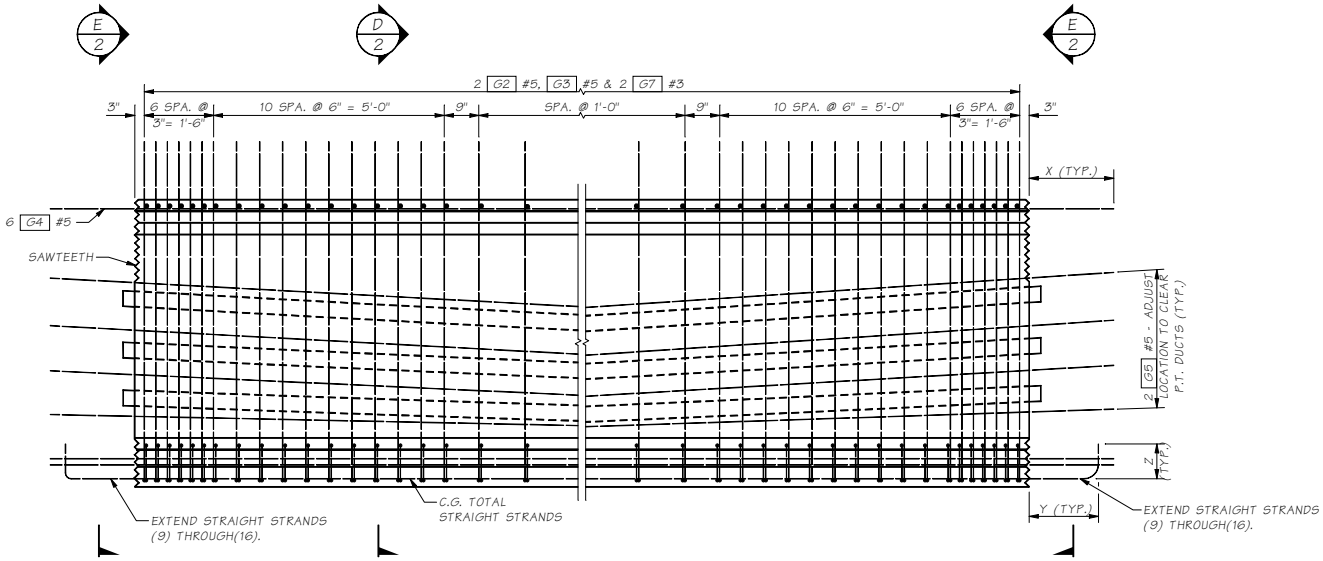

ELEVATION
MID-SEGMENT REINFORCING

Bridge Design Engr.	M:\STANDARDS\Girders\PT Wide Flange\WF74PTG4.MAN				VERSION NO.	STATE	FED. AID PROJ. NO.	SHEET NO.	TOTAL SHEETS
Supervisor					10	WASH.			
Designed By					JOB NUMBER				
Checked By									
Detailed By									
Bridge Projects Engr.									
Prelim Plan By									
Architect/Specialist	DATE	REVISION	BY	APPD					

BRIDGE AND STRUCTURES OFFICE

Washington State Department of Transportation

STANDARD PRESTRESSED CONCRETE GIRDERS

WF74PTG GIRDER DETAILS 4 OF 5

BRIDGE SHEET NO. SHEET OF SHEETS

SR JOB NO. SHEET

5.9-A1-4

Fri Sep 10 08:30:02 2010

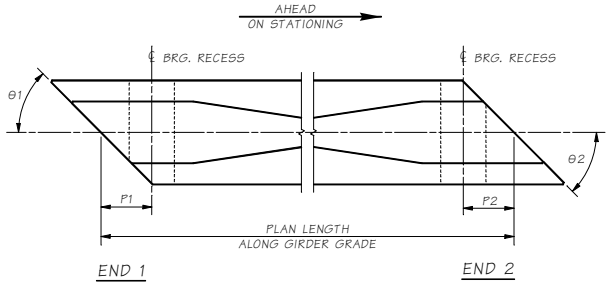

GIRDER PLAN

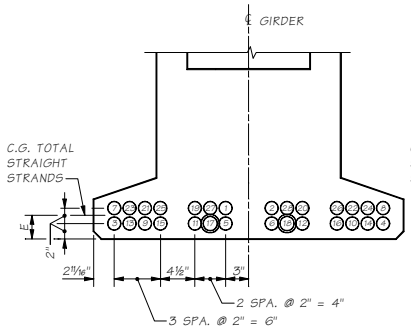

STRAND PATTERN PRECAST END SEGMENTS

STRAIGHT STRAND LOCATION SEQUENCE SHALL BE AS SHOWN: (1), (2), (3), ETC.

○ - INDICATES DEBONDED STRAND.

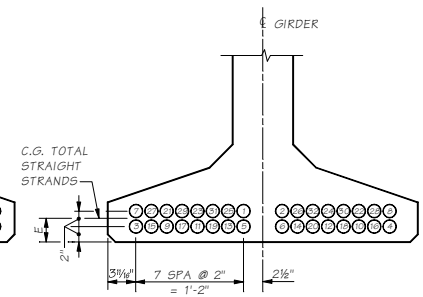

STRAND PATTERN PRECAST MID-SEGMENTS

STRAIGHT STRAND LOCATION SEQUENCE SHALL BE AS SHOWN: (1), (2), (3), ETC.

○ - INDICATES DEBONDED STRAND.

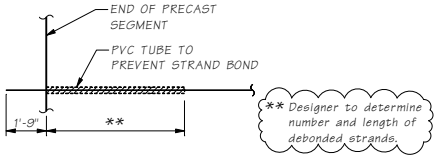

STRAND DEBONDING DETAIL

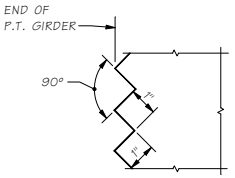

SAWTEETH DETAIL

SAWTEETH ARE FULL WIDTH ~ USE SAWTOOTH KEYS IN AREA OUTSIDE OF PT. DUCTS AS SHOWN IN VIEWS B AND E - GIRDER DETAILS 2 OF 5

GIRDER SCHEDULE

DIMENSION "A" AT ℄ BEARINGS = SEE "A" DIMENSION TABLE

SPAN	GIRDER	END SEGMENT 1														MID-SEGMENT											END SEGMENT 2											
		MINIMUM CONCRETE COMPR. STRENGTH									STRAIGHT		C.G. STRANDS									STRAIGHT		C.G. STRANDS										STRAIGHT		C.G. STRANDS		
		@ FINAL F'C (KSI)	@ RELEASE F'CI (KSI)	END 1 TYPE	END 2 TYPE	L	θ1 (DEG.)	θ2 (DEG.)	P1	PLAN LENGTH (ALONG ℄ GIRDER GRADE)	NO. OF STRANDS	JACKING FORCE (KIPS)	E	C	D @ 40 DAYS	END 1 TYPE	END 2 TYPE	L	θ1 (DEG.)	θ2 (DEG.)	PLAN LENGTH (ALONG ℄ GIRDER GRADE)	NO. OF STRANDS	JACKING FORCE (KIPS)	E	C	D	END 1 TYPE	END 2 TYPE	L	θ1 (DEG.)	θ2 (DEG.)	P2	PLAN LENGTH (ALONG ℄ GIRDER GRADE)	NO. OF STRANDS	JACKING FORCE (KIPS)	E	C	D @ 40 DAYS

"A" DIMENSION TABLE

PIER	"A" (40 DAYS) (IN.)	"A" (120 DAYS) (IN.)

NOTE:
Dimensions shall be shown in imperial units to the nearest 1/8th inch.

Bridge Design Engr.	M:\STANDARDS\Girders\PT Wide Flange\WF-PTG5.MAN				REGION NO.	STATE	FED. AID PROJ. NO.	SHEET NO.	TOTAL SHEETS	BRIDGE AND STRUCTURES OFFICE
Supervisor					10	WASH.				
Designed By					JOB NUMBER					
Checked By										
Detailed By										
Bridge Projects Engr.										
Prelim. Plan By										
Architect/Specialist	DATE	REVISION	BY	APPD						

Washington State Department of Transportation

STANDARD PRESTRESSED CONCRETE GIRDERS

SPLICED GIRDER DETAILS 5 OF 5

BRIDGE SHEET NO. SHEET OF SHEETS

SR JOB NO. SHEET 1

5.9-A1-5

Fri Sep 10 08:30:02 2010

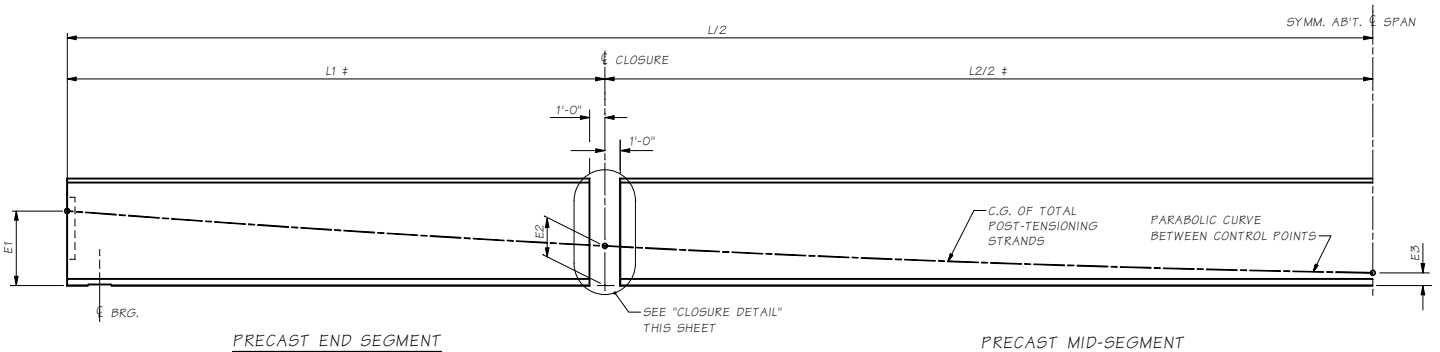

PRECAST LONGITUDINAL HALF-SECTION

SHOWING POST-TENSIONING CABLE PATHS
‡ MEASURED BEFORE POST-TENSIONING.

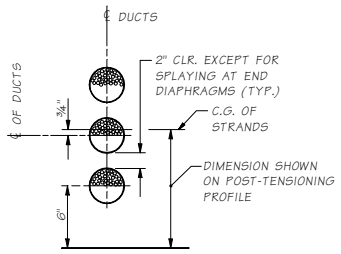

STRAND LOCATION DETAIL

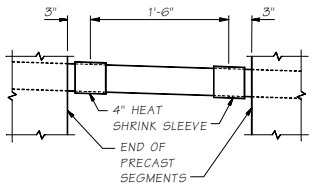

DUCT SPLICE DETAIL

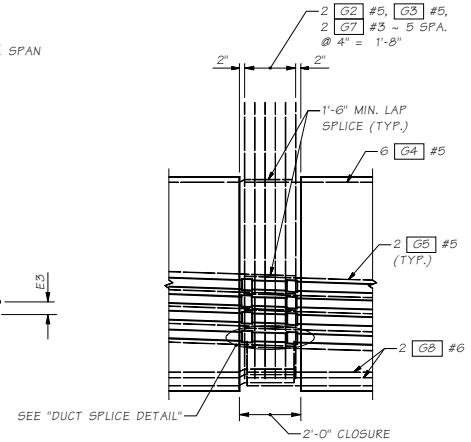

CLOSURE DETAIL

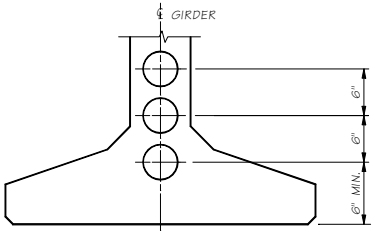

POST-TENSIONING STRAND PATTERN AT ℄ SPAN

POST-TENSIONING TABLE

SPAN	GIRDER	MIN. CONC. COMPRESSIVE STRENGTH (KSI)		NUMBER OF STRANDS	PRESTRESSING LOAD (KIPS)		TOTAL PRESTRESS LOSS (KSI)	E1 (IN.)	E2 (IN.)	E3 (IN.)	TEMPORARY STRANDS	
		GIRDER	CLOSURE		JACKING	AFTER SEATING					NUMBER OF STRANDS	JACKING FORCE (KIPS)

POST-TENSIONING NOTES

1. THE MINIMUM COMPRESSIVE STRENGTH OF THE CAST-IN-PLACE CONCRETE AT THE CLOSURE AT THE TIME OF POST-TENSIONING SHALL BE AS SHOWN IN POST-TENSIONING TABLE.
2. THE MAXIMUM OUTSIDE DIAMETER OF THE DUCT SHALL BE ??? INCHES. THE AREA OF THE DUCT SHALL BE AT LEAST 2.5 TIMES THE NET AREA OF THE PRESTRESSING STEEL IN THE DUCT.
3. THE DESIGN IS BASED ON [½"ø OR 0.6"ø] LOW RELAXATION STRANDS WITH AN ANCHOR SET OF ⅜", A CURVATURE FRICTION COEFFICIENT, μ = 0.20 AND A WOBBLE FRICTION COEFFICIENT, k = 0.0002/FT. THE ACTUAL ANCHOR SET AND JACKING FORCE USED BY THE CONTRACTOR SHALL BE SPECIFIED IN THE SHOP PLANS AND INCLUDED IN THE TRANSFER FORCE CALCULATIONS.
4. THE DESIGN IS BASED ON THE ESTIMATED PRESTRESS LOSS OF POST-TENSIONING STRANDS SHOWN IN THE POST-TENSIONING TABLE DUE TO STEEL RELAXATION, ELASTIC SHORTENING CREEP AND SHRINKAGE OF CONCRETE.
5. THE CONTRACTOR SHALL SUBMIT THE STRESSING SEQUENCE AND ELONGATION CALCULATIONS TO THE ENGINEER FOR APPROVAL. ALL LOSSES DUE TO TENDON VERTICAL AND HORIZONTAL CURVATURE MUST BE INCLUDED IN ELONGATION CALCULATIONS. THE STRESSING SEQUENCE SHALL MEET THE FOLLOWING CRITERIA:
   A. THE PRESTRESSING FORCE SHALL BE DISTRIBUTED WITH AN APPROXIMATELY EQUAL AMOUNT IN EACH WEB AND SHALL BE PLACED SYMMETRICALLY ABOUT THE CENTERLINE OF THE BRIDGE.
   B. NO MORE THAN ONE-HALF OF THE PRESTRESSING FORCE IN ANY WEB MAY BE STRESSED BEFORE AN EQUAL FORCE IS STRESSED IN THE ADJACENT WEBS. AT NO TIME DURING STRESSING OPERATION WILL MORE THAN 1/6 OF THE TOTAL PRESTRESSING FORCE IS APPLIED ECCENTRICALLY ABOUT THE CENTERLINE OF THE BRIDGE.
6. ALL TENDONS SHALL BE STRESSED FROM ONE END.
7. TEMPORARY STRANDS SHALL BE POST-TENSIONED IN ACCORDANCE WITH SECTION 6-02.3(25)L OF THE STANDARD SPECIFICATIONS. TEMPORARY STRANDS MAY BE POST-TENSIONED ON THE SAME DAY THE PRETENSIONING IS RELEASED INTO THE GIRDER.

Bridge Design Engr.	M:\STANDARDS\Girders\PT Wide Flange\WF83PTG1.man				REGION NO.	STATE	FED. AID PROJ. NO.	SHEET NO.	TOTAL SHEETS	BRIDGE AND STRUCTURES OFFICE
Supervisor					10	WASH.				Washington State Department of Transportation
Designed By					JOB NUMBER					STANDARD PRESTRESSED CONCRETE GIRDERS
Checked By										WF83PTG SPLICED GIRDER DETAILS 1 OF 5
Detailed By										BRIDGE SHEET NO. 5.9-A2-1
Bridge Projects Engr.										SHEET OF SHEETS
Prelim. Plan By										
Architect/Specialist	DATE	REVISION	BY	APP'D						

SR JOB NO. SHEET

Fri Sep 10 08:30:02 2010

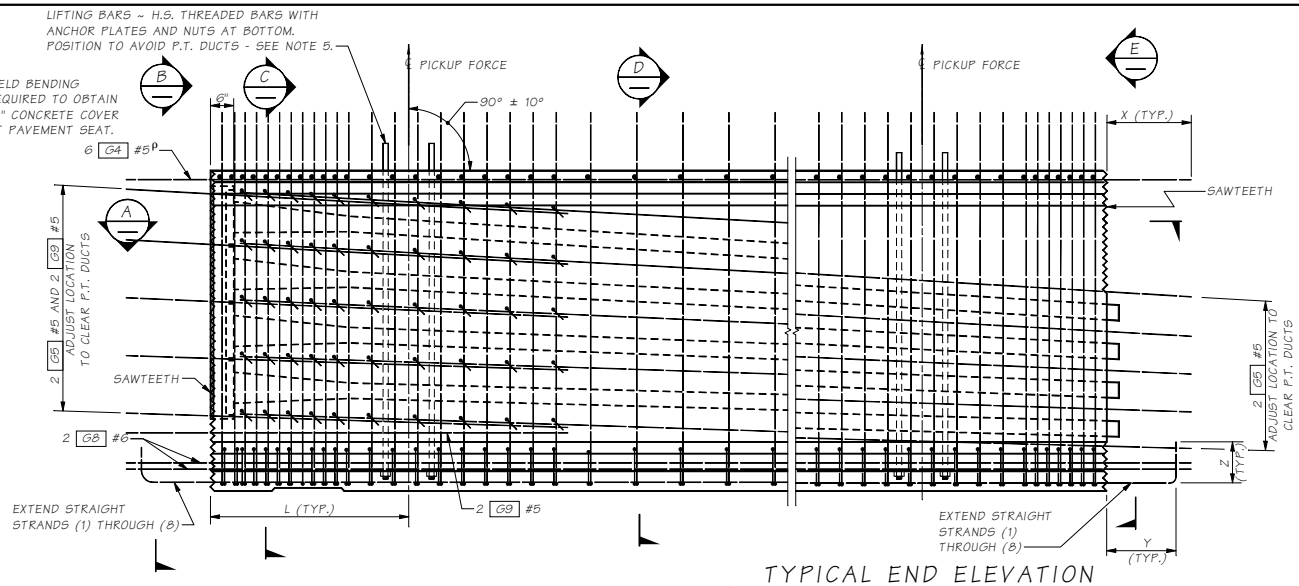

PRE-TENSIONING NOTES

1. PLAN LENGTH SHALL BE INCREASED AS NECESSARY TO COMPENSATE FOR SHORTENING DUE TO PRESTRESS AND SHRINKAGE.
2. ALL PRETENSIONED AND TEMPORARY STRANDS SHALL BE [½"ø OR 0.6"ø] LOW RELAXATION STRANDS (AASHTO M203 GRADE 270.)
3. FOR END TYPES A, C, D AND E CUT ALL STRANDS FLUSH WITH THE GIRDER ENDS AND PAINT WITH AN APPROVED EPOXY RESIN, EXCEPT FOR EXTENDED STRANDS AS SHOWN. FOR END TYPE B CUT ALL STRANDS 1" BELOW CONCRETE SURFACE AND GROUT WITH AN APPROVED EPOXY GROUT.
4. THE TOP SURFACE OF THE GIRDER FLANGE SHALL BE ROUGHENED IN ACCORDANCE WITH SECTION 6-02.3(25)H OF THE STANDARD SPECIFICATIONS.
5. LIFTING EMBEDMENTS SHALL BE INSTALLED IN ACCORDANCE WITH SECTION 6-02.3(25)L OF THE STANDARD SPECIFICATIONS. CONTRACTOR TO DESIGN OTHER LIFTING MECHANISM IF THE GIRDER SECTION WEIGHT EXCEEDS 200 KIPS.
6. CAUTION SHALL BE EXERCISED IN HANDLING AND PLACING GIRDERS. ALL GIRDERS SHALL BE CHECKED BY THE CONTRACTOR TO ENSURE THAT THEY ARE BRACED ADEQUATELY TO PREVENT TIPPING AND TO CONTROL LATERAL BENDING DURING SHIPPING. ONCE ERECTED, ALL GIRDERS SHALL BE BRACED LATERALLY TO PREVENT TIPPING UNTIL THE DIAPHRAGMS ARE CAST AND CURED.
7. FORMS FOR BEARING PAD RECESSES SHALL BE CONSTRUCTED AND FASTENED IN SUCH A MANNER AS TO NOT CAUSE DAMAGE TO THE GIRDER DURING THE STRAND RELEASE OPERATION.

TYPICAL ELEVATION AT END SEGMENT

END TYPE A SHOWN, OTHER END TYPES SIMILAR

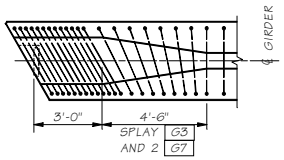

TRANSVERSE REINFORCING AT SKEWED ENDS

ONLY TRANSVERSE REINFORCING SHOWN

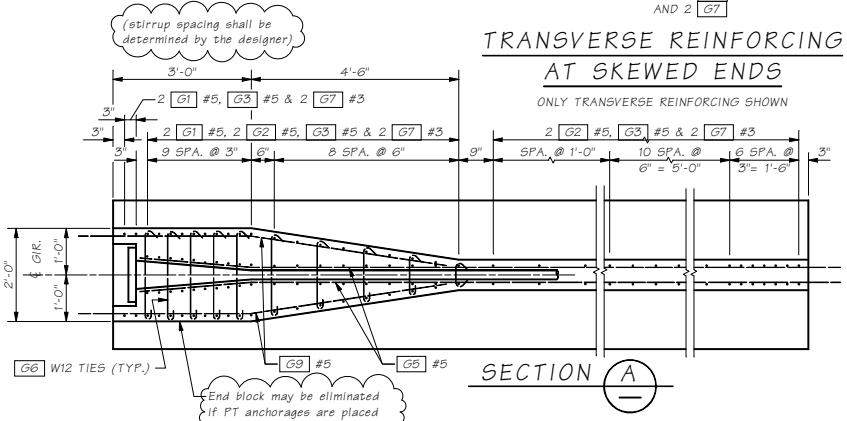

SECTION A

TYPICAL END ELEVATION AT CLOSURE

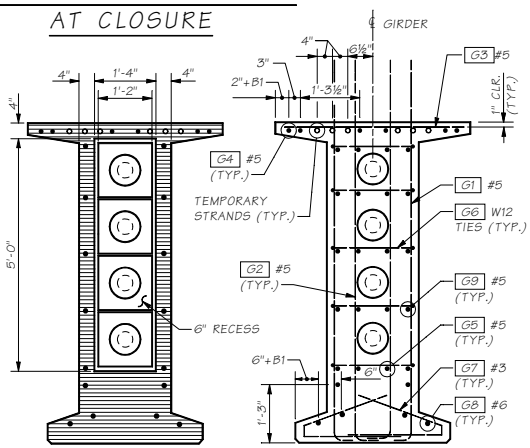

VIEW B

SAWTEETH SHOWN BY HATCHED AREA.

SECTION C

FOR "B1" SEE GIRDER DETAILS 3 OF 5

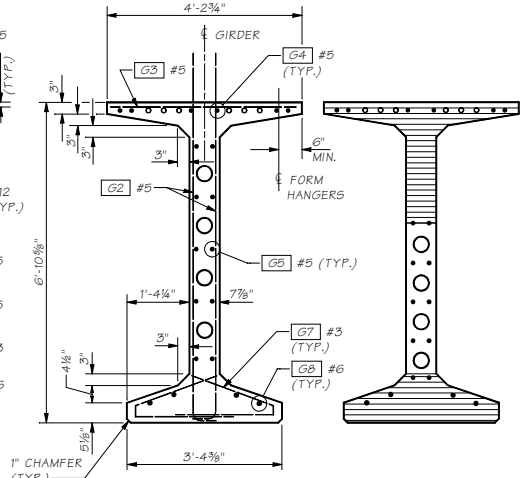

SECTION D

VIEW E

SAWTEETH SHOWN BY HATCHED AREA.

Bridge Design Engr.	M:\STANDARDS\Girders\PT Wide Flange\WF83PTG2.man								
Supervisor					REGION NO.	STATE	FED. AID PROJ. NO.	SHEET NO.	TOTAL SHEETS
Designed By					10	WASH.			
Checked By					JOB NUMBER				
Detailed By									
Bridge Projects Engr.									
Prelim. Plan By									
Architect/Specialist	DATE	REVISION	BY	APPD					

BRIDGE AND STRUCTURES OFFICE

Washington State Department of Transportation

STANDARD PRESTRESSED CONCRETE GIRDERS

WF83PTG SPLICED GIRDER DETAILS 2 OF 5

BRIDGE SHEET NO. — SHEET OF SHEETS

SR JOB NO. SHEET 5.9-A2-2

Fri Sep 10 08:30:02 2010

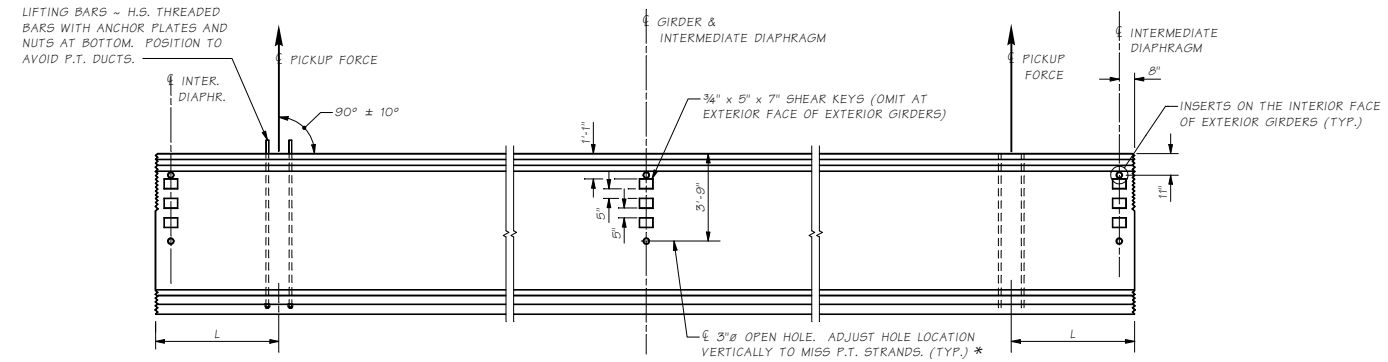

GIRDER ELEVATION
MID-SEGMENT

* OMIT HOLES AND PLACE INSERTS ON THE INTERIOR FACE OF EXTERIOR GIRDERS. PLACE HOLES AND INSERTS PARALLEL TO SKEW. INSERTS SHALL BE 1"ø BURKE HI-TENSILE, LANCASTER MALLEABLE, DAYTON-SUPERIOR F-62 FLARED THIN SLAB (1" x 4⅝") FERRULE INSERT OR APPROVED EQUAL. (TYP.)

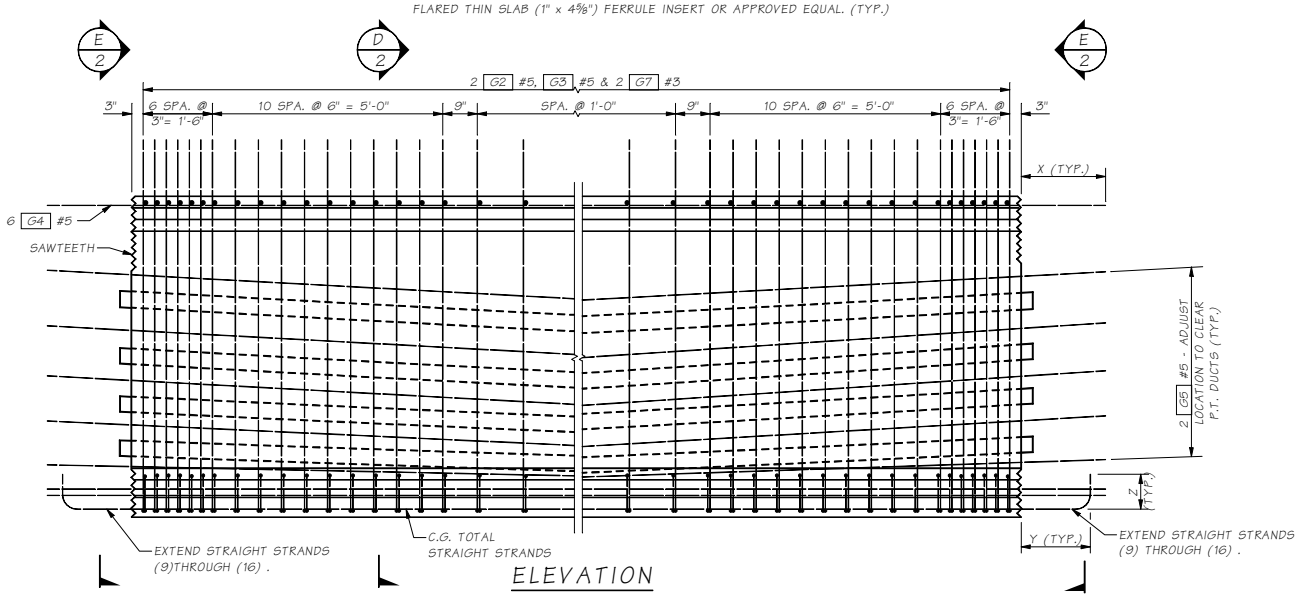

ELEVATION
MID-SEGMENT REINFORCING

Bridge Design Engr.	M:\STANDARDS\Girders\PT Wide Flange\WF83PTG4.man								
Supervisor					REGION NO.	STATE	FED. AID PROJ. NO.	SHEET NO.	TOTAL SHEETS
Designed By					10	WASH.			
Checked By					JOB NUMBER				
Detailed By									
Bridge Projects Engr.									
Prelim. Plan By									
Architect/Specialist	DATE	REVISION	BY	APP'D					

BRIDGE AND STRUCTURES OFFICE

Washington State Department of Transportation

STANDARD PRESTRESSED CONCRETE GIRDERS

WF83PTG SPLICED GIRDER DETAILS 4 OF 5

BRIDGE SHEET NO.

SHEET OF SHEETS

SR JOB NO. SHEET

5.9-A2-4

Fri Sep 10 08:30:03 2010

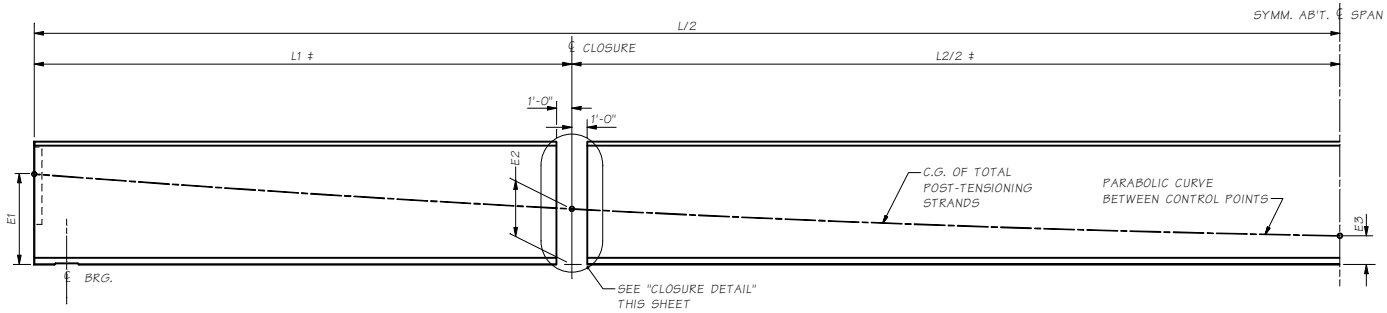

PRECAST END SEGMENT

PRECAST MID-SEGMENT

PRECAST LONGITUDINAL HALF-SECTION

SHOWING POST-TENSIONING CABLE PATHS
± MEASURED BEFORE POST-TENSIONING.

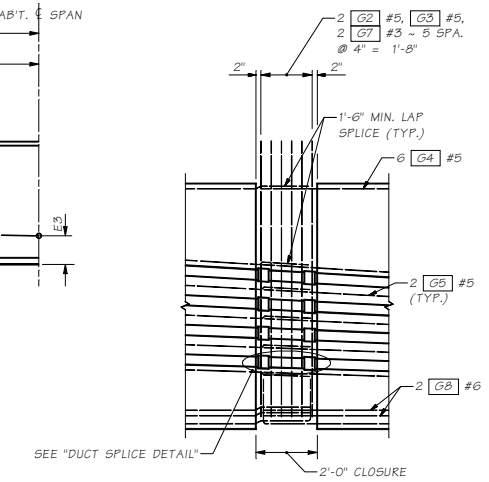

CLOSURE DETAIL

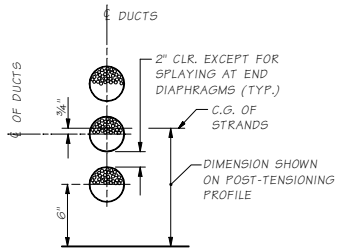

TENDON IN SAG CURVE

STRAND LOCATION DETAIL

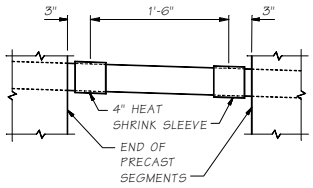

DUCT SPLICE DETAIL

POST-TENSIONING TABLE

SPAN	GIRDER	MIN. CONC. COMPRESSIVE STRENGTH (KSI)		NUMBER OF STRANDS	PRESTRESSING LOAD (KIPS)		TOTAL PRESTRESS LOSS (KSI)	E1 (IN.)	E2 (IN.)	E3 (IN.)	TEMPORARY STRANDS	
		GIRDER	CLOSURE		JACKING	AFTER SEATING					NUMBER OF STRANDS	JACKING FORCE (KIPS)

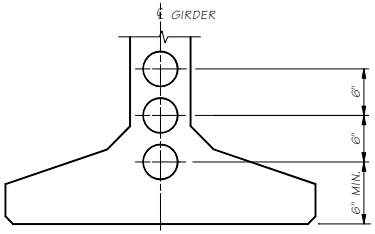

POST-TENSIONING STRAND PATTERN AT ℄ SPAN

POST-TENSIONING NOTES

1. THE MINIMUM COMPRESSIVE STRENGTH OF THE CAST-IN-PLACE CONCRETE AT THE CLOSURE AT THE TIME OF POST-TENSIONING SHALL BE AS SHOWN IN POST-TENSIONING TABLE.
2. THE MAXIMUM OUTSIDE DIAMETER OF THE DUCT SHALL BE ??? INCHES. THE AREA OF THE DUCT SHALL BE AT LEAST 2.5 TIMES THE NET AREA OF THE PRESTRESSING STEEL IN THE DUCT.
3. THE DESIGN IS BASED ON [½"ø OR 0.6"ø] LOW RELAXATION STRANDS WITH AN ANCHOR SET OF ⅜", A CURVATURE FRICTION COEFFICIENT, μ = 0.20 AND A WOBBLE FRICTION COEFFICIENT, k = 0.0002/FT. THE ACTUAL ANCHOR SET AND JACKING FORCE USED BY THE CONTRACTOR SHALL BE SPECIFIED IN THE SHOP PLANS AND INCLUDED IN THE TRANSFER FORCE CALCULATIONS.
4. THE DESIGN IS BASED ON THE ESTIMATED PRESTRESS LOSS OF POST-TENSIONING STRANDS SHOWN IN THE POST-TENSIONING TABLE DUE TO STEEL RELAXATION, ELASTIC SHORTENING CREEP AND SHRINKAGE OF CONCRETE.
5. THE CONTRACTOR SHALL SUBMIT THE STRESSING SEQUENCE AND ELONGATION CALCULATIONS TO THE ENGINEER FOR APPROVAL. ALL LOSSES DUE TO TENDON VERTICAL AND HORIZONTAL CURVATURE MUST BE INCLUDED IN ELONGATION CALCULATIONS. THE STRESSING SEQUENCE SHALL MEET THE FOLLOWING CRITERIA:
   A. THE PRESTRESSING FORCE SHALL BE DISTRIBUTED WITH AN APPROXIMATELY EQUAL AMOUNT IN EACH WEB AND SHALL BE PLACED SYMMETRICALLY ABOUT THE CENTERLINE OF THE BRIDGE.
   B. NO MORE THAN ONE-HALF OF THE PRESTRESSING FORCE IN ANY WEB MAY BE STRESSED BEFORE AN EQUAL FORCE IS STRESSED IN THE ADJACENT WEBS. AT NO TIME DURING STRESSING OPERATION WILL MORE THAN 1/6 OF THE TOTAL PRESTRESSING FORCE IS APPLIED ECCENTRICALLY ABOUT THE CENTERLINE OF THE BRIDGE.
6. ALL TENDONS SHALL BE STRESSED FROM ONE END.
7. TEMPORARY STRANDS SHALL BE POST-TENSIONED IN ACCORDANCE WITH SECTION 6-02.3(25)L OF THE STANDARD SPECIFICATIONS. TEMPORARY STRANDS MAY BE POST-TENSIONED ON THE SAME DAY THE PRETENSIONING IS RELEASED INTO THE GIRDER.

Bridge Design Engr.	M:\STANDARDS\Girders\FT Wide Flange\WF95PTG1.man				REGION NO.	STATE	FED. AID PROJ. NO.	SHEET NO.	TOTAL SHEETS
Supervisor					10	WASH.			
Designed By					JOB NUMBER				
Checked By									
Detailed By									
Bridge Projects Engr.									
Prelim Plan By									
Architect/Specialist	DATE	REVISION	BY	APP'D					

BRIDGE AND STRUCTURES OFFICE

Washington State Department of Transportation

STANDARD PRESTRESSED CONCRETE GIRDERS

WF95PTG SPLICED GIRDER DETAILS 1 OF 5

BRIDGE SHEET NO. SHEET OF SHEETS

SHEET JOB NO. SR

5.9-A3-1

Fri Sep 10 08:30:03 2010

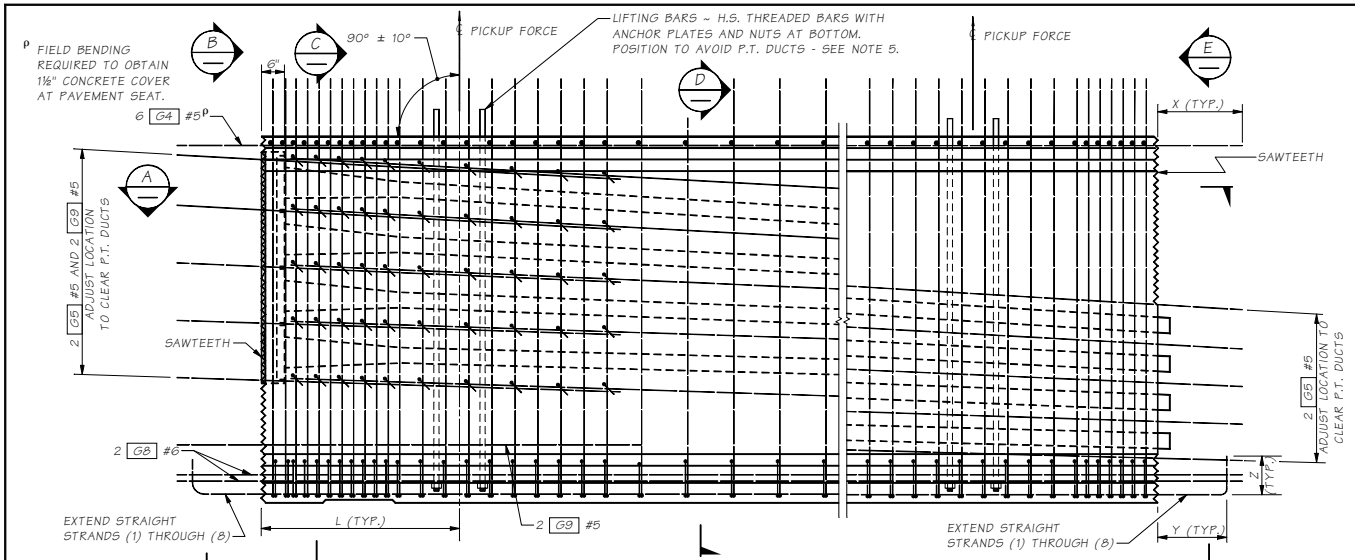

TYPICAL ELEVATION AT END SEGMENT

END TYPE A SHOWN, OTHER END TYPES SIMILAR

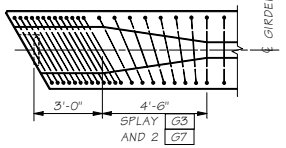

TYPICAL END ELEVATION AT CLOSURE

TRANSVERSE REINFORCING AT SKEWED ENDS

ONLY TRANSVERSE REINFORCING SHOWN

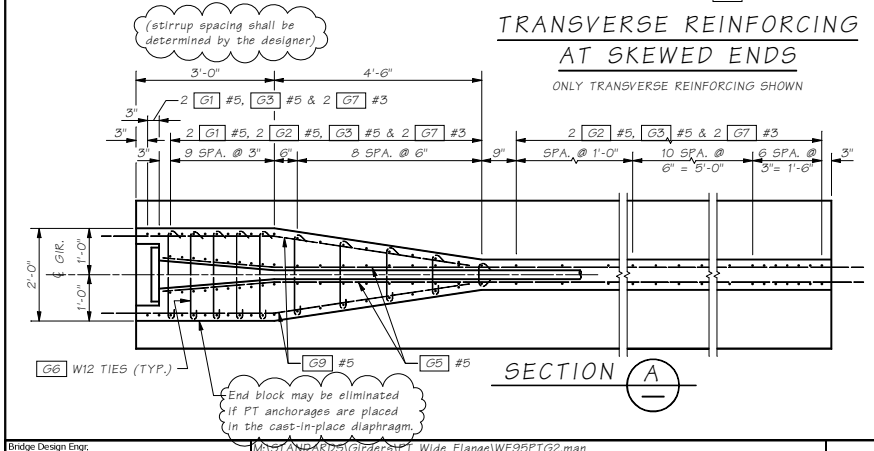

SECTION A

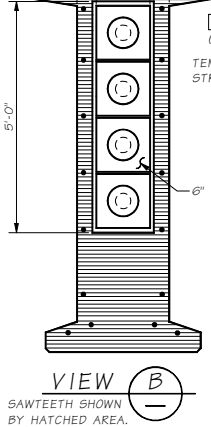

VIEW B

SAWTEETH SHOWN BY HATCHED AREA.

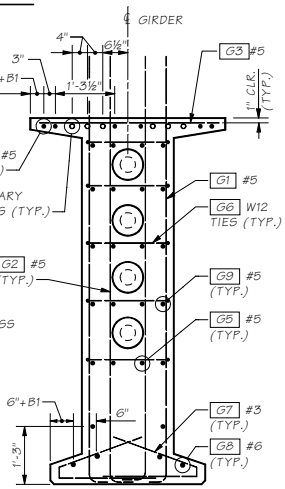

SECTION C

FOR "B1" SEE GIRDER DETAILS 3 OF 5

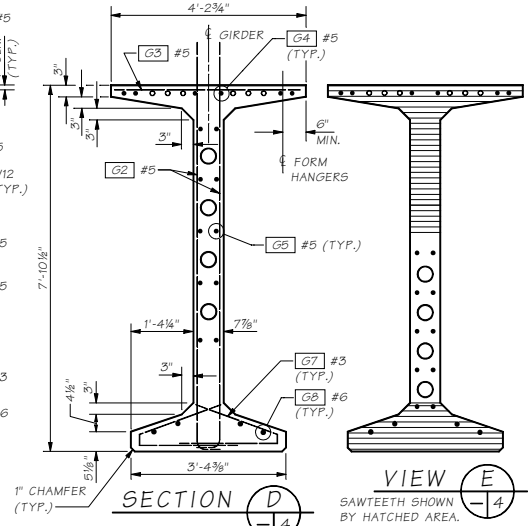

SECTION D

VIEW E

SAWTEETH SHOWN BY HATCHED AREA.

PRE-TENSIONING NOTES

1. PLAN LENGTH SHALL BE INCREASED AS NECESSARY TO COMPENSATE FOR SHORTENING DUE TO PRESTRESS AND SHRINKAGE.
2. ALL PRETENSIONED AND TEMPORARY STRANDS SHALL BE [½"ø OR 0.6"ø] LOW RELAXATION STRANDS (AASHTO M203 GRADE 270.)
3. FOR END TYPES A, C, D AND E CUT ALL STRANDS FLUSH WITH THE GIRDER ENDS AND PAINT WITH AN APPROVED EPOXY RESIN, EXCEPT FOR EXTENDED STRANDS AS SHOWN. FOR END TYPE B CUT ALL STRANDS 1" BELOW CONCRETE SURFACE AND GROUT WITH AN APPROVED EPOXY GROUT.
4. THE TOP SURFACE OF THE GIRDER FLANGE SHALL BE ROUGHENED IN ACCORDANCE WITH SECTION 6-02.3(25)H OF THE STANDARD SPECIFICATIONS.
5. LIFTING EMBEDMENTS SHALL BE INSTALLED IN ACCORDANCE WITH SECTION 6-02.3(25)L OF THE STANDARD SPECIFICATIONS. CONTRACTOR TO DESIGN OTHER LIFTING MECHANISM IF THE GIRDER SECTION WEIGHT EXCEEDS 200 KIPS.
6. CAUTION SHALL BE EXERCISED IN HANDLING AND PLACING GIRDERS. ALL GIRDERS SHALL BE CHECKED BY THE CONTRACTOR TO ENSURE THAT THEY ARE BRACED ADEQUATELY TO PREVENT TIPPING AND TO CONTROL LATERAL BENDING DURING SHIPPING. ONCE ERECTED, ALL GIRDERS SHALL BE BRACED LATERALLY TO PREVENT TIPPING UNTIL THE DIAPHRAGMS ARE CAST AND CURED.
7. FORMS FOR BEARING PAD RECESSES SHALL BE CONSTRUCTED AND FASTENED IN SUCH A MANNER AS TO NOT CAUSE DAMAGE TO THE GIRDER DURING THE STRAND RELEASE OPERATION.

Bridge Design Engr.	M:\STANDARDS\Girders\PT Wide Flange\WF95PTG2.man							
Supervisor				REGION NO.	STATE	FED. AID PROJ. NO.	SHEET NO.	TOTAL SHEETS
Designed By				10	WASH.			
Checked By				JOB NUMBER				
Detailed By								
Bridge Projects Engr.								
Prelim. Plan By								
Architect/Specialist	DATE	REVISION	BY	APPD				

BRIDGE AND STRUCTURES OFFICE

Washington State Department of Transportation

STANDARD PRESTRESSED CONCRETE GIRDERS

WF95PTG SPLICED GIRDER DETAILS 2 OF 5

BRIDGE SHEET NO. — SHEET — OF — SHEETS

JOB NO. 5.9-A3-2 SHEET SR

Fri Sep 10 08:30:03 2010

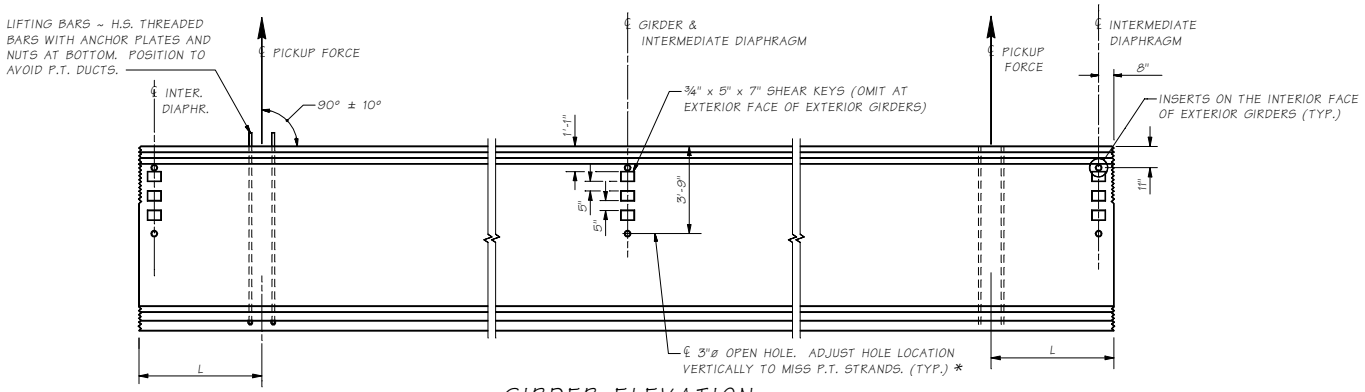

GIRDER ELEVATION
MID-SEGMENT

* OMIT HOLES AND PLACE INSERTS ON THE INTERIOR FACE OF EXTERIOR GIRDERS. PLACE HOLES AND INSERTS PARALLEL TO SKEW. INSERTS SHALL BE 1"ø BURKE HI-TENSILE, LANCASTER MALLEABLE, DAYTON-SUPERIOR F-62 FLARED THIN SLAB (1" x 4⅝") FERRULE INSERT OR APPROVED EQUAL. (TYP.)

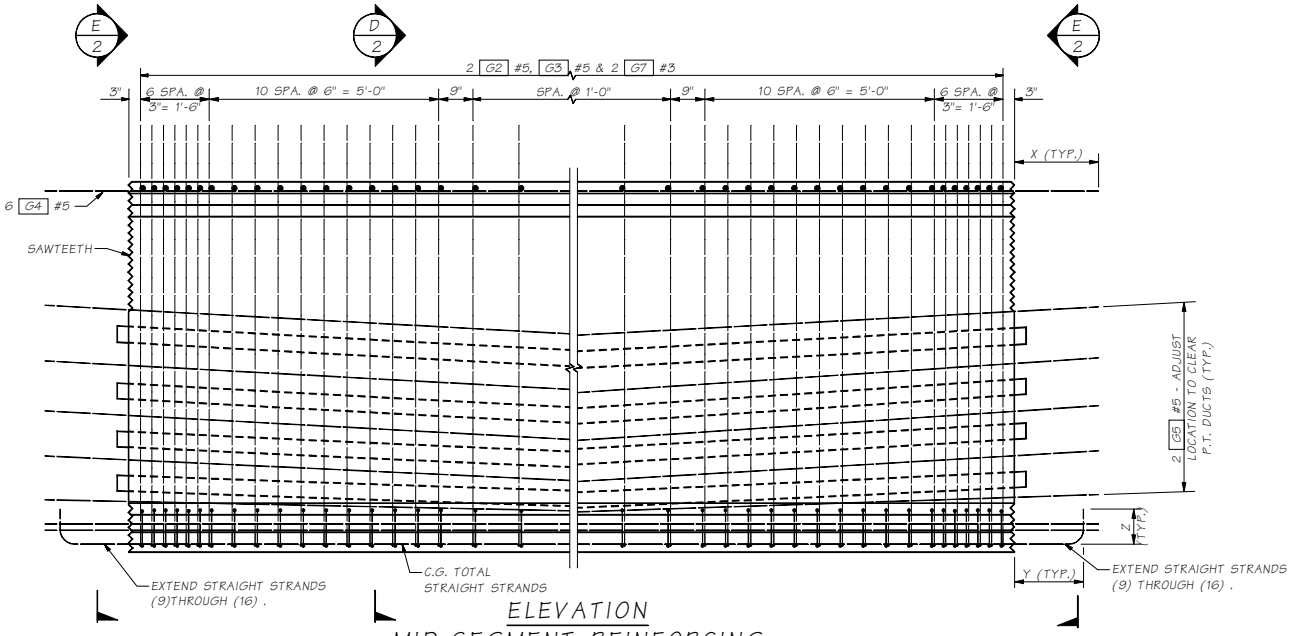

ELEVATION
MID-SEGMENT REINFORCING

Bridge Design Engr.	M:\STANDARDS\Girders\PT Wide Flange\WF95PTG4.man				REGION NO.	STATE	FED. AID PROJ. NO.	SHEET NO.	TOTAL SHEETS	BRIDGE AND STRUCTURES OFFICE
Supervisor					10	WASH.				
Designed By					JOB NUMBER					
Checked By										
Detailed By										
Bridge Projects Engr.										
Prelim Plan By										
Architect/Specialist	DATE	REVISION	BY	APPD						

Washington State Department of Transportation

STANDARD PRESTRESSED CONCRETE GIRDERS

WF95PTG SPLICED GIRDER DETAILS 4 OF 5

BRIDGE SHEET NO.

SHEET OF SHEETS

SR JOB NO. 5.9-A3-4 SHEET

Fri Sep 10 08:30:03 2010

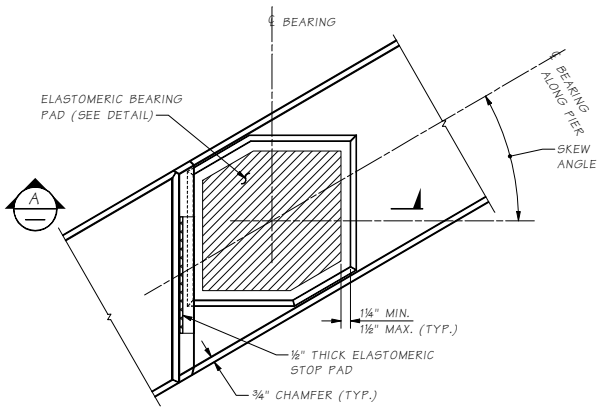

GROUT PAD DETAIL

GIRDER NOT SHOWN FOR CLARITY

Skew angle shown at 30°.

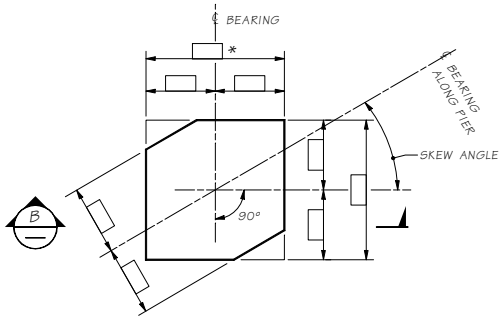

ELASTOMERIC BEARING PAD

LAMINATED ELASTOMERIC BEARING PAD (☐ SHIMS)

Skew angle shown at 30°.

* The edge of the bearing pad shall be set at 1" from the edge of the girder.

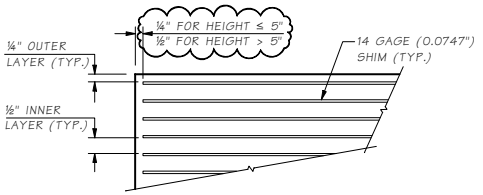

SECTION B

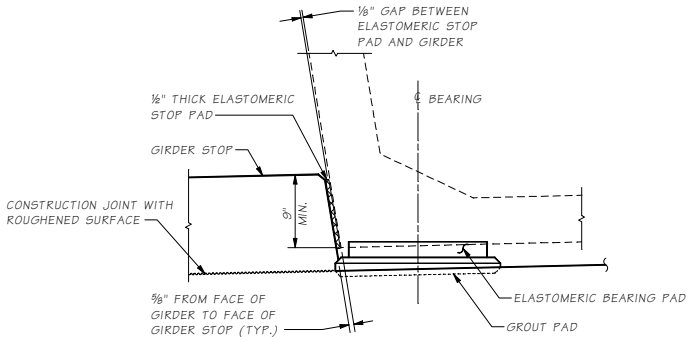

SECTION A

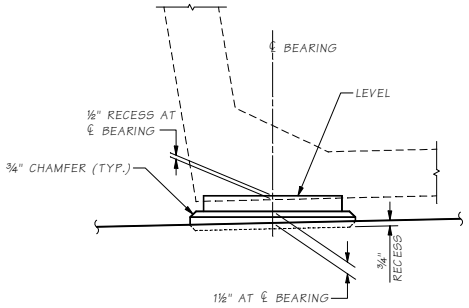

GROUT PAD ELEVATION

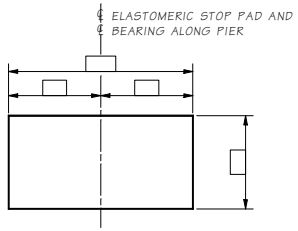

ELASTOMERIC STOP PAD

SHEAR MODULUS = 165 PSI

BEARING DESIGN TABLE AASHTO METHOD B DESIGN	
SERVICE - I LIMIT STATE	
DEAD LOAD (DL) REACTION	KIPS
LIVE LOAD REACTION (W/O IMPACT)	KIPS
UNLOADED HEIGHT	IN
LOADED HEIGHT (DL)	IN
SHEAR MODULUS	165 PSI

NOTES:

1. GIRDER STOPS SHALL BE CONSTRUCTED AFTER GIRDER PLACEMENT.
2. THE ELASTOMERIC STOP PADS SHALL BE CEMENTED TO GIRDER STOPS WITH APPROVED ADHESIVE.

Bridge Design Engr.	M:\STANDARDS\Girders\PT Trapezoidal Tubs\BEARING_DET_PT_TRAPEZOIDAL_TUB.MAN				REGION NO.	STATE	FED. AID PROJ. NO.	SHEET NO.	TOTAL SHEETS
Supervisor					10	WASH.			
Designed By					JOB NUMBER				
Checked By									
Detailed By									
Bridge Projects Engr.									
Prelim. Plan By									
Architect/Specialist	DATE	REVISION	BY	APP'D					

BRIDGE AND STRUCTURES OFFICE

Washington State Department of Transportation

STANDARD PRESTRESSED CONCRETE GIRDERS

TRAPEZOIDAL TUB GIRDER BEARING DETAILS

BRIDGE SHEET NO.

SHEET OF SHEETS

Fri Sep 10 08:51:09 2010

Last revised on : 4/1/2010

SR JOB NO. SHEET

5.9-A4-1

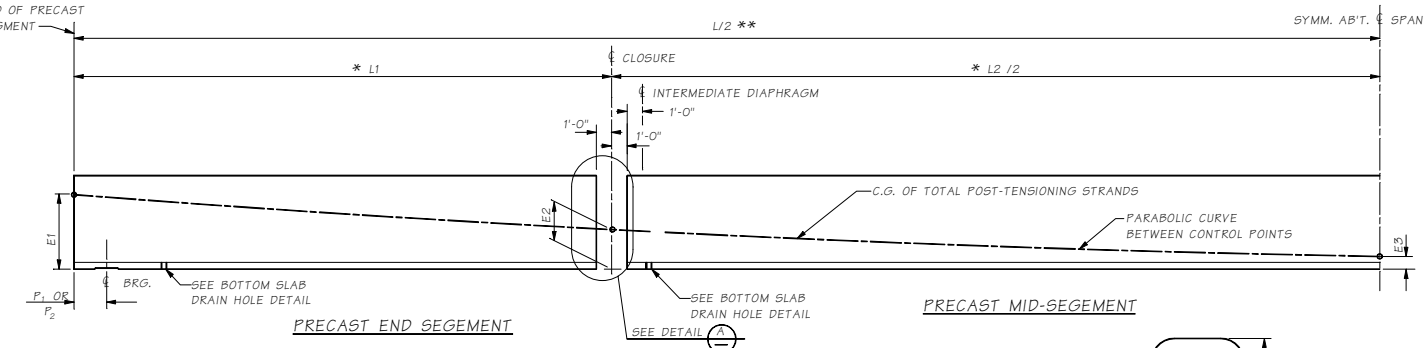

PRECAST LONGITUDINAL HALF-SECTION

SHOWING POST-TENSIONING CABLE PATHS
* MEASURED BEFORE POST-TENSIONING.

** CONTRACTOR MAY ELECT TO CAST THE PT GIRDER IN ONE PIECE IF THE SHIPPING WEIGHT IS LESS THAN 182 KIPS & THE SHIPPING ROUTE ALLOWS THE SHIPMENT OF LONG GIRDERS.

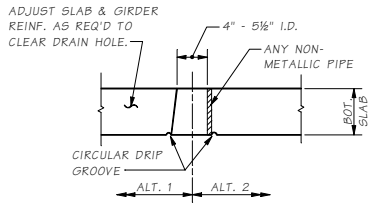

BOTTOM SLAB DRAIN HOLE

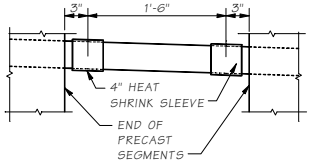

DUCT SPLICE DETAIL

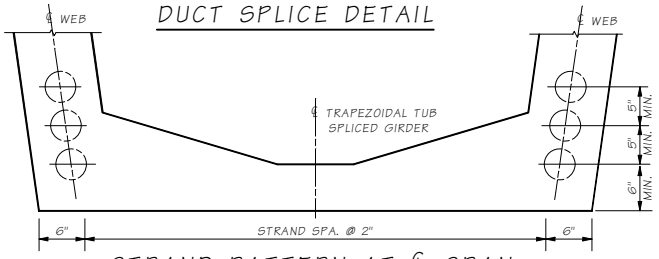

STRAND PATTERN AT ℄ SPAN

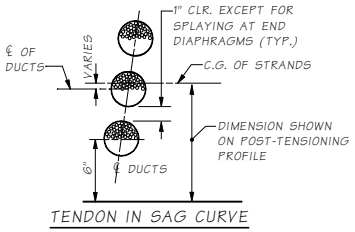

TENDON IN SAG CURVE

STRAND LOCATION DETAIL

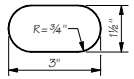

OPEN HOLE DETAIL

BOTTOM HOLE AT END TYPE "B" ONLY

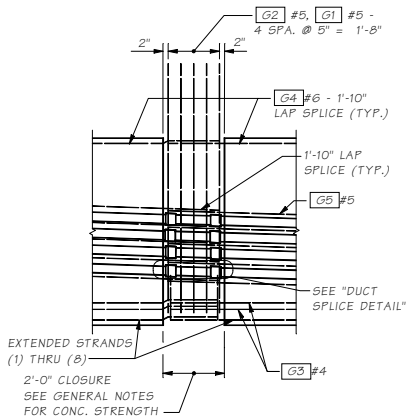

DETAIL A

POST-TENSIONING TABLE

SPAN	GIRDER	STRAND DIAMETER IN.	PRESSING LOAD PER WEB TOTAL KIPS		PRESTRESS LOSS KSI (TD+ES+FR+AS)	E_1 (IN.)	E_2 (IN.)	E_3 (IN.)
			JACKING	AFTER SEATING				

POST-TENSIONING NOTES

1. THE CAST-IN-PLACE CONCRETE IN DECK SLAB SHALL BE CLASS 4000D. THE MINIMUM COMPRESSIVE STRENGTH OF THE CAST-IN-PLACE CONCRETE AT THE WET JOINT AT THE TIME OF POST-TENSIONING SHALL BE ??? ksi.
2. THE MINIUM PRESTRESSING LOAD AFTER SEATING AND THE MINIMUM NUMBER OF PRESTRESSING STRANDS FOR EACH GIRDER SHALL BE AS SHOWN IN POST-TENSIONING TABLE.
3. THE DESIGN IS BASED ON ?? INCH DIAMETER LOW RELAXATION STRANDS WITH A JACKING LOAD FOR EACH GIRDER AS SHOWN IN POST-TENSIONING TABLE, AN ANCHOR SET OF ⅜ INCH OF CURVATURE FRICTION COEFFICIENT, μ = 0.20 AND A WOBBLE FRICTION COEFFICIENT, k = 0.0002/ft. THE ACTUAL ANCHOR SET USED BY THE CONTRACTOR SHALL BE SPECIFIED IN THE SHOP PLANS AND INCLUDED IN THE TRANSFER FORCE CALCULATIONS.
4. THE DESIGN IS BASED ON THE ESTIMATED PRESTRESS LOSS OF POST-TENSIONING STRANDS SHOWN IN POST-TENSIONING TABLE DUE TO STEEL RELAXATION, ELASTIC SHORTENING CREEP AND SHRINKAGE OF CONCRETE.
5. THE CONTRACTOR SHALL SUBMIT THE STRESSING SEQUENCE AND ELONGATION CALCULATIONS TO THE ENGINEER FOR APPROVAL. ALL LOSSES DUE TO TENDON VERTICAL AND HORIZONTAL CURVATURE MUST BE INCLUDED IN ELONGATION CALCULATIONS.
   A. THE PRESTRESSING FORCE SHALL BE DISTRIBUTED WITH AN APPROXIMATELY EQUAL AMOUNT IN EACH WEB AND SHALL BE PLACED SYMMETRICALLY ABOUT THE CENTERLINE OF THE TUB.
   B. NO MORE THAN ONE-HALF OF THE PRESTRESSING FORCE IN ANY WEB MAY BE STRESSED BEFORE AN EQUAL FORCE IS STRESSED IN THE ADJACENT WEBS. AT NO TIME DURING STRESSING OPERATION WILL MORE THAN ONE-SIXTH OF THE TOTAL PRESTRESSING FORCE IS APPLIED ECCENTRICALLY ABOUT THE CENTERLINE OF BRIDGE.
6. THE MAXIMUM OUTSIDE DIAMETER OF THE DUCT SHALL BE ??? INCHES. THE AREA OF THE DUCT SHALL BE AT LEAST 2.5 TIMES THE NET AREA OF THE PRESTRESSING STEEL IN THE DUCT.
7. ALL TENDONS SHALL BE STRESSED FROM PIER ??.
8. SIDE FORMS FROM INSIDE & OUTSDIE OF THE CLOSURES & CROSSBEAM SHALL BE REMOVED PRIOR TO POST-TENSIONING.

Bridge Design Engr.	M:\STANDARDS\Girders\PT Trapezoidal Tubs\PT_TRAPEZOIDAL TUB 1.MAN				REGION NO.	STATE	FED. AID PROJ. NO.	SHEET NO.	TOTAL SHEETS
Supervisor					10	WASH.			
Designed By					JOB NUMBER				
Checked By									
Detailed By									
Bridge Projects Engr.									
Prelim. Plan By									
Architect/Specialist	DATE	REVISION	BY	APP'D					

BRIDGE AND STRUCTURES OFFICE

Washington State Department of Transportation

STANDARD PRESTRESSED CONCRETE GIRDERS

TUB SPLICED GIRDER DETAILS 1 OF 5

BRIDGE SHEET NO. SHEET OF SHEETS

SR JOB NO. SHEET 5.9-A4-2

Fri Sep 10 08:51:09 2010

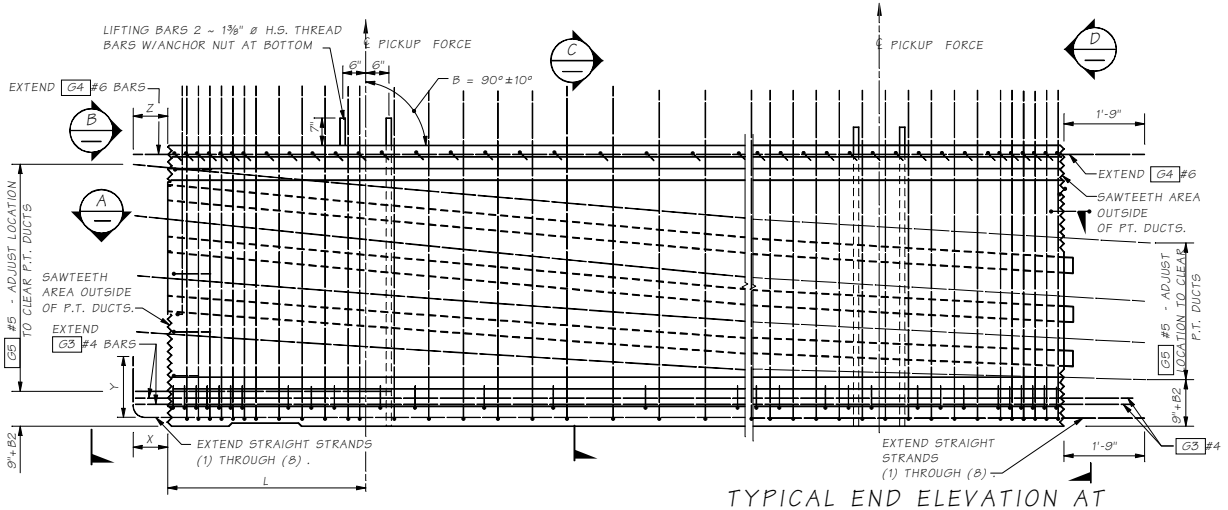

TYPICAL END ELEVATION AT END DIAPHRAGMS

TYPICAL END ELEVATION AT CLOSURE PLACEMENT

PRE-TENSIONING NOTES:

1. PLAN LENGTH SHALL BE INCREASED AS NECESSARY TO COMPENSATE FOR SHORTENING DUE TO PRESTRESS AND SHRINKAGE.
2. ALL STRAND FOR PRETENSIONING SHALL BE ??? DIAMETER LOW RELAXATION STRANDS (AASHTO M203, GRADE 270).
3. FOR END TYPES A, C AND D, CUT ALL STRANDS FLUSH WITH THE GIRDER ENDS AND PAINT WITH AN APPROVED EPOXY RESIN, EXCEPT FOR EXTENDED STRANDS AS SHOWN. FOR END TYPES B AND E CUT ALL STRANDS 1" BELOW CONCRETE SURFACE AND GROUT WITH AN APPROVED EPOXY GROUT.
4. EXTENDED STRANDS AND BARS ARE PARALLEL TO GIRDER.
5. LIFTING BARS SHALL BE 1 ⅜" DIAMETER HIGH STRENGTH THREADED BARS (AASHTO M275, GRADE 150 MINIMUM). LIFTING HARDWARE THAT CONNECTS TO THREADED BARS SHALL BE DESIGNED AND DETAILED BY THE CONTRACTOR. LIFTING FORCES ON THREAD BARS SHALL BE VERTICAL ONLY AND WITHIN 10 DEGREES OF PERPENDICULAR TO A LINE BETWEEN PICK POINTS. CONTRACTOR SHALL SUBMIT CALCULATIONS FOR APPROVAL BY THE ENGINEER IF LIFTING FORCES ARE TO BE OTHERWISE.
6. EXTRA CAUTION MUST BE EXERCISED IN HANDLING AND PLACING ALL GIRDERS. ALL GIRDERS SHALL BE CHECKED TO ENSURE THAT THEY ARE BRACED ADEQUATELY TO PREVENT TIPPING AND TO CONTROL LATERAL BENDING DURING SHIPPING.
7. THE TOP SURFACE OF THE GIRDER FLANGE SHALL BE ROUGHENED IN ACCORDANCE WITH SECTION 6-02.3(25)H.
8. FORMS FOR BEARING PAD RECESSES SHALL BE CONSTRUCTED AND FASTENED IN SHAPE A MANNER AS NOT TO CAUSE DAMAGE TO THE GIRDER DURING STRAND RELEASE OPERATION.

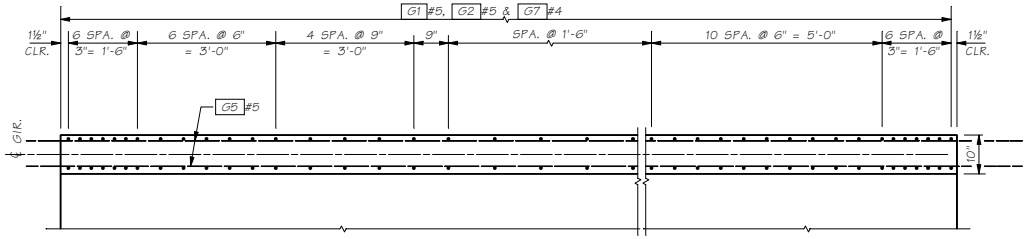

SECTION A/4 (ONE WEB SHOWN)

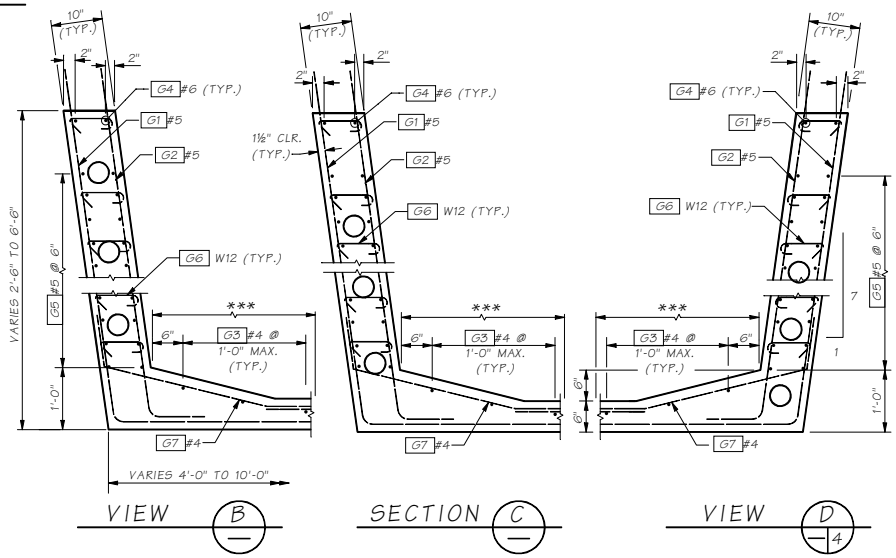

VIEW B/4 SECTION C/4 VIEW D/4

*** 1'-0" FOR BOTTOM FLANGE WIDTH LESS THAN 5'-6"
2'-0" FOR BOTTOM FLANGE WIDTH EQUAL OR GREATER THAN 5'-6"

Bridge Design Engr.	M:\STANDARDS\Girders\PT_Trapezoidal_Tubs\PT_TRAPEZOIDAL_TUB_2.MAN								
Supervisor					REGION NO.	STATE	FED. AID PROJ. NO.	SHEET NO.	TOTAL SHEETS
Designed By					10	WASH.			
Checked By					JOB NUMBER				
Detailed By									
Bridge Projects Engr.									
Prelim. Plan By									
Architect/Specialist	DATE	REVISION	BY	APPD					

BRIDGE AND STRUCTURES OFFICE

Washington State Department of Transportation

STANDARD PRESTRESSED CONCRETE GIRDERS

TUB SPLICED GIRDER DETAILS 2 OF 5

BRIDGE SHEET NO. SHEET OF SHEETS

SR JOB NO. 5.9-A4-3 SHEET 2

Fri Sep 10 08:51:09 2010

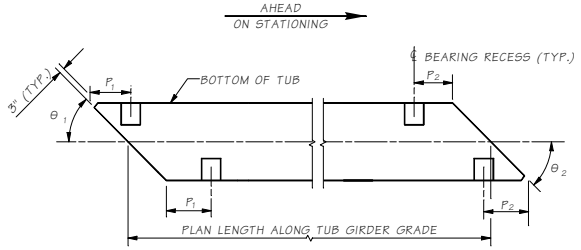

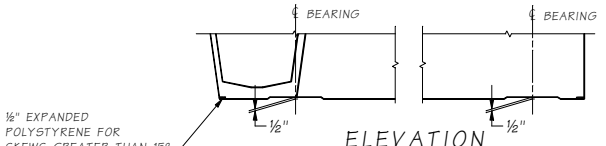

ELEVATION

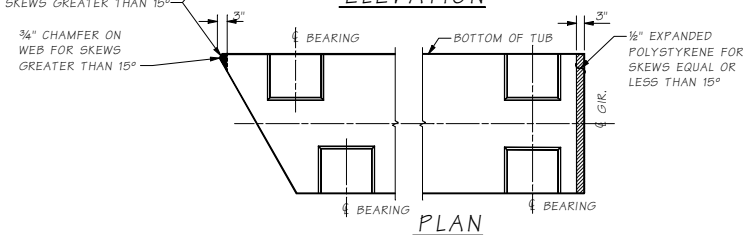

PLAN

BOTTOM OF TUB SPALL PROTECTION

END TYPE "C" INTERMEDIATE HINGE DIAPHRAGM
AND END TYPE "D" INTEREMEDIATE FIXED DIAPHRAGM

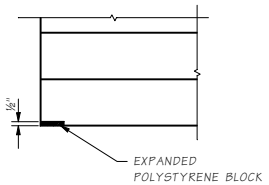

SECTION A

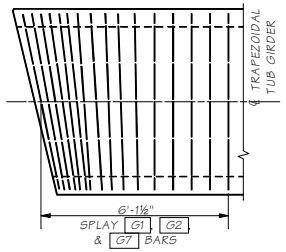

TRANSVERSE REINFORCING AT SKEWED ENDS

ONLY TRANSVERSE REINF. SHOWN

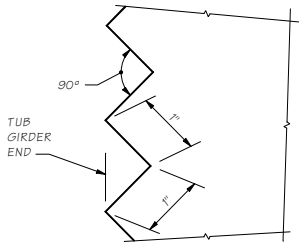

SAWTOOTH DETAILS

SAWTEETH ARE FULL WIDTH - USE SAWTEETH FULL HEIGHT ON END SECTIONS.

***THE NUMBER OF LIFTING BARS SHALL BE BASED ON 54 KIPS PER EACH 1⅜" ø BAR.

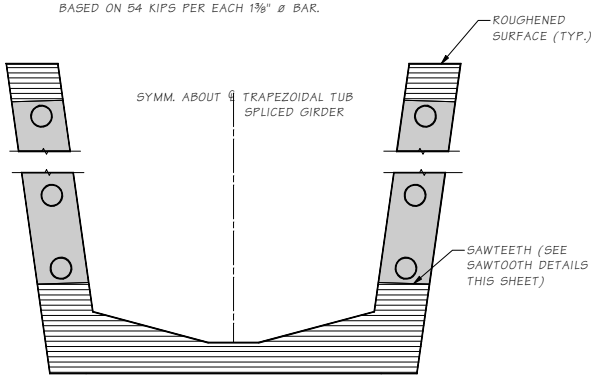

TYPICAL END ELEVATION

EXTENDED STRANDS NOT SHOWN.
USE SAWTOOTH KEYS FROM BOTTOM OF BOTTOM FLANGE TO BOTTOM OF LOWEST HARPED STRANDS.

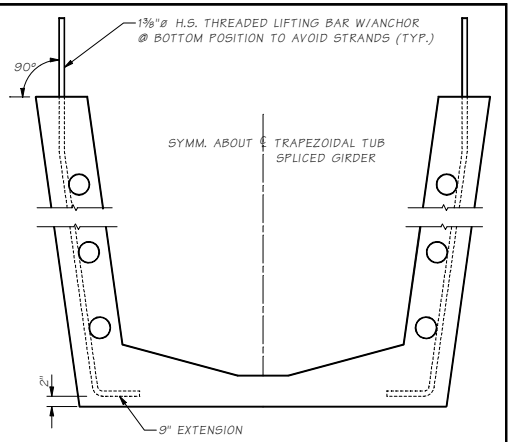

P.C. SECTION

BENDING DIAGRAM

MARK	LOCATION	SIZE	U	W	X	ALL DIMENSIONS ARE OUT TO OUT
G1	**STIRRUPS, OUTSIDE WEB**	5				
G2	STIRRUPS, INSIDE WEB	5				
G3	LONGITUDINAL BOTTOM FLANGE	4				STR.
G4	TOP WEB LONGIT.	6				STR.
G5	LONGITUDINAL WEB	5				STR.
G6	WEB TIE	W12				≠ #4 MAY BE SUBSTITUTED FOR W12, FIELD BENDING IS OPTIONAL
G7	WEB	4				

* = VARIES FOR SKEWED SPANS

NOTE:
FOR DIMENSION "A", SEE "GIRDER SCHEDULE"

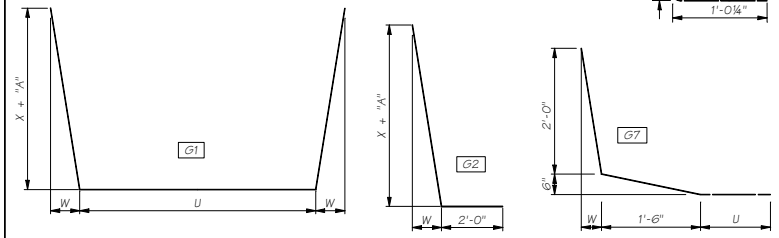

Bridge Design Engr.	M:\STANDARDS\Girders\PT Trapezoidal Tubs\PT_TRAPEZOIDAL TUB 3.MAN							
Supervisor					REGION NO.	STATE	FED. AID PROJ. NO.	SHEET NO.	TOTAL SHEETS
Designed By					10	WASH.			
Checked By					JOB NUMBER				
Detailed By									
Bridge Projects Engr.									
Prelim Plan By									
Architect/Specialist	DATE	REVISION	BY	APPD					

BRIDGE AND STRUCTURES OFFICE

Washington State Department of Transportation

STANDARD PRESTRESSED CONCRETE GIRDERS

TUB SPLICED GIRDER DETAILS 3 OF 5

BRIDGE SHEET NO. | SHEET | OF | SHEETS

JOB NO. 5.9-A4-4 SHEET 2 SR

Fri Sep 10 08:51:10 2010

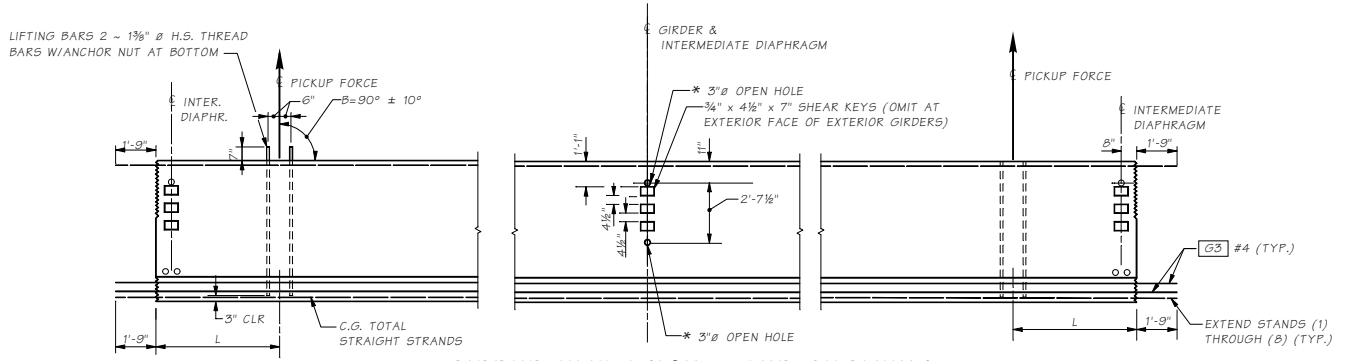

GIRDER ELEVATION ~ MID-SEGMENT

* OMIT HOLES AND PLACE INSERTS ON THE INTERIOR FACE OF EXTERIOR WEB. PLACE HOLES AND INSERTS PARALLEL TO SKEW. INSERTS SHALL BE 1" ø ROCKET/KOHLER, BURKE HI-TENSILE, LANCASTER MALLEABLE OR APPROVED EQUAL.

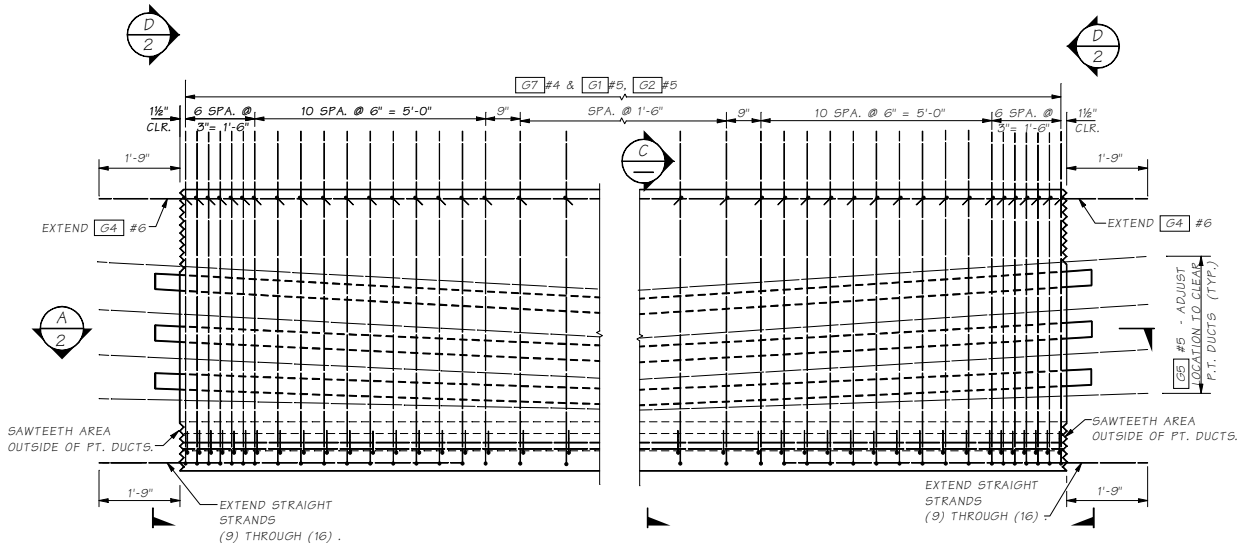

TYPICAL MID-SEGMENT ELEVATION

Bridge Design Engr.	M:\STANDARDS\Girders\PT Trapezoidal Tubs\PT_TRAPEZOIDAL TUB 4.MAN				REGION NO.	STATE	FED. AID PROJ. NO.	SHEET NO.	TOTAL SHEETS
Supervisor					10	WASH.			
Designed By					JOB NUMBER				
Checked By									
Detailed By									
Bridge Projects Engr.									
Prelim. Plan By									
Architect/Specialist	DATE	REVISION	BY	APPD					

BRIDGE AND STRUCTURES OFFICE

Washington State Department of Transportation

STANDARD PRESTRESSED CONCRETE GIRDERS

TUB SPLICED GIRDER DETAILS 4 OF 5

BRIDGE SHEET NO.

SHEET OF SHEETS

SR JOB NO. 5.9-A4-5 SHEET

Fri Sep 10 08:51:10 2010

DIMENSION "A" AT ℄ BEARINGS = SEE "A" DIMENSION TABLE

SPAN	GIRDER	END SEGMENT 1													MID-SEGMENT												END SEGMENT 2											
		MINIMUM CONCRETE COMPR. STRENGTH		END 1 TYPE	END 2 TYPE	L	θ1 (DEG.)	θ2 (DEG.)	P1	PLAN LENGTH (ALONG ℄ GIRDER GRADE)	STRAIGHT		C.G. STRANDS	Ld	END 1 TYPE	END 2 TYPE	L	θ1 (DEG.)	θ2 (DEG.)	PLAN LENGTH (ALONG ℄ GIRDER GRADE)	STRAIGHT		C.G. STRANDS	Ld	END 1 TYPE	END 2 TYPE	L	θ1 (DEG.)	θ2 (DEG.)	P2	PLAN LENGTH (ALONG ℄ GIRDER GRADE)	STRAIGHT		C.G. STRANDS	Ld
		@ FINAL F'C (KSI)	@ RELEASE F'CI (KSI)								NO. OF STRANDS	JACKING FORCE (KIPS)	E									NO. OF STRANDS	JACKING FORCE (KIPS)	E										NO. OF STRANDS	JACKING FORCE (KIPS)	E	

NOTES TO DESIGNER:

1. This strand extension detail is to be used for continuous spans at moment resisting diaphragms only.This detail is not applicable to continuous spans using hinge diaphragms.
2. Designer shall calculate the exact number of extended straight strands needed to develop the required moment capacity at the end of the girder. This calculation shall be based on the tensile strength of the strands, the stresses imposed on the anchor, and concrete bearing against the projected area of the anchor.
   The total number of extended strands shall not be less than:
3. $Nps = 12(Mc + Vc \times h - M_{SIDL}) \times Nc \times \frac{K}{Ng} \quad \frac{K}{(0.9\ Aps \times fps \times d)}$

where:
Mc, Vc = The lesser of Elastic or Plastic hinging moment & shear capacity of column Ft-kips, kips respectively,
h = distance from top of column to c.g. of superstructure, Ft
Nc = number of columns
Ng = number of girders
Aps = area of each extended strand, in
fps = ultimate strength of strands, ksi
d = distance from top of slab to c.g. of extended strands, in
M = Moment due to SIDL (Traffic barrier, sidewalk, etc.)
K = 0.5 for L1 = L2
0.67 for L1 = 2L2

NOTE:
Dimensions shall be shown in Imperial units to the nearest 1/8th inch.

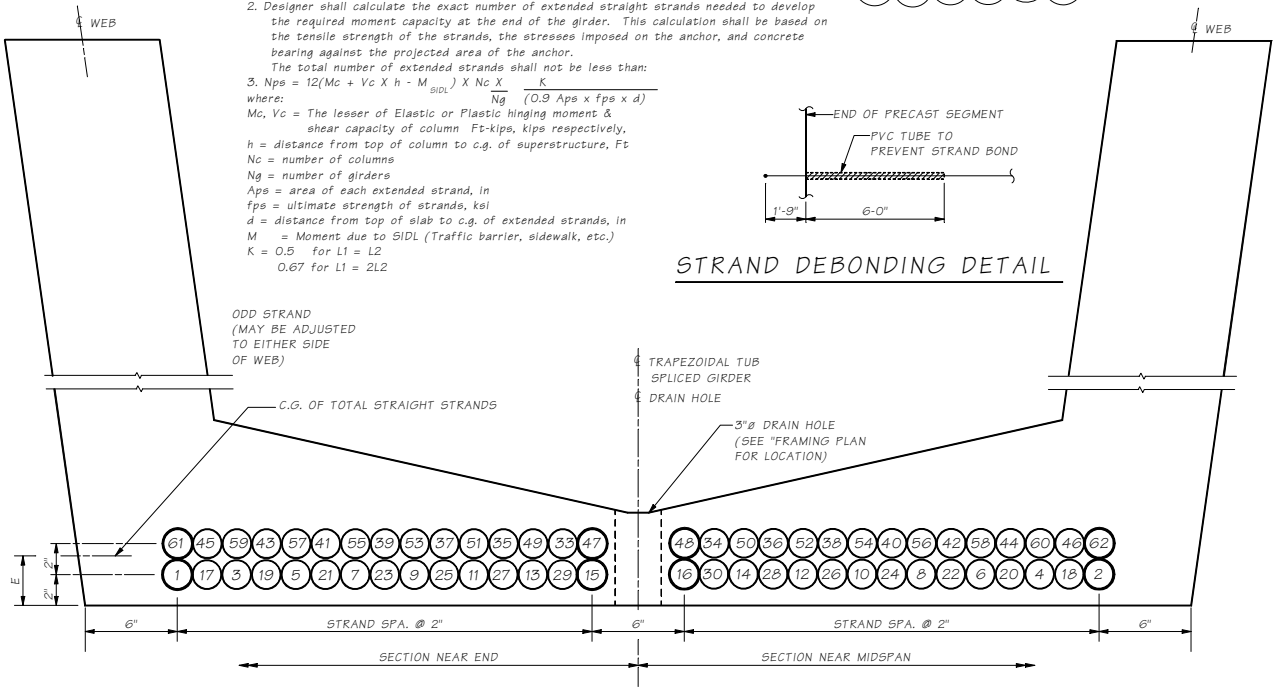

STRAND PATTERN

STRAND LOCATION SEQUENCE SHALL BE AS SHOWN (1), (2) ETC.

STRAND DEBONDING DETAIL

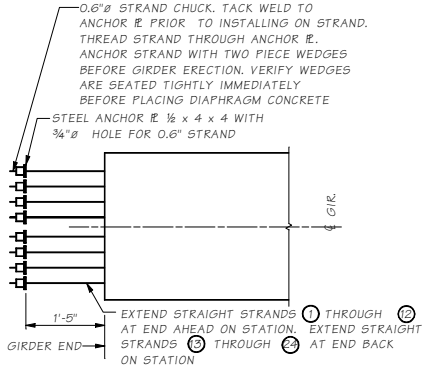

ALTERNATE # 1

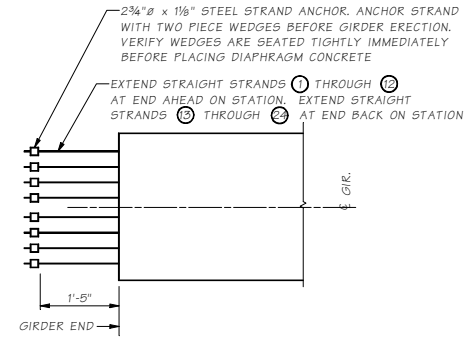

ALTERNATE # 2

STRAND EXTENSION DETAIL FOR END TYPE D

NOT ALL EXTENDED STRANDS ARE SHOWN

Bridge Design Engr.	M:\STANDARDS\Girders\PT Trapezoidal Tubs\PT_TRAPEZOIDAL TUB 5.MAN								
Supervisor					REGION NO.	STATE	FED. AID PROJ. NO.	SHEET NO.	TOTAL SHEETS
Designed By					10	WASH.			
Checked By					JOB NUMBER				
Detailed By									
Bridge Projects Engr.									
Prelim. Plan By									
Architect/Specialist	DATE	REVISION	BY	APPD					

BRIDGE AND STRUCTURES OFFICE

Washington State Department of Transportation

STANDARD PRESTRESSED CONCRETE GIRDERS

TUB SPLICED GIRDER DETAILS 5 OF 5

BRIDGE SHEET NO. | SHEET | OF | SHEETS

SR | JOB NO. | SHEET

5.9-A4-6

Fri Sep 10 08:51:10 2010

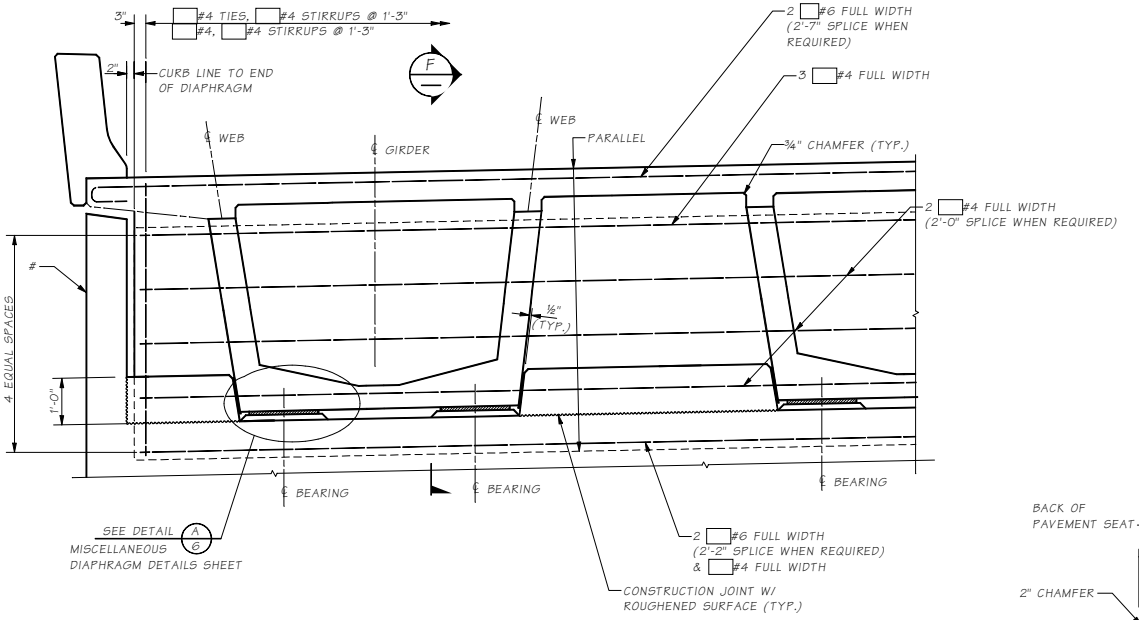

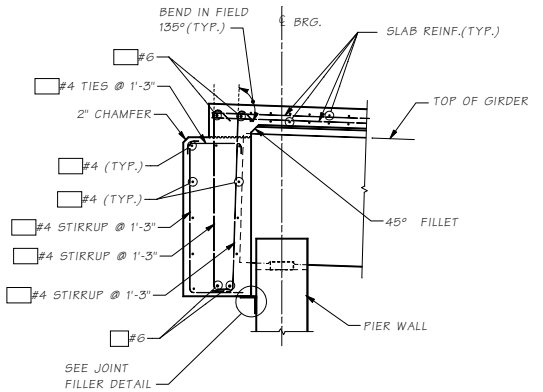

SECTION F

NOTE TO DESIGNER

If ground line is less than 2'-0" minimum below the bottom of girder at front face of abutment a curtain wall shall be provided.

TYPICAL END TYPE "A" DIAPHRAGM AT END PIERS

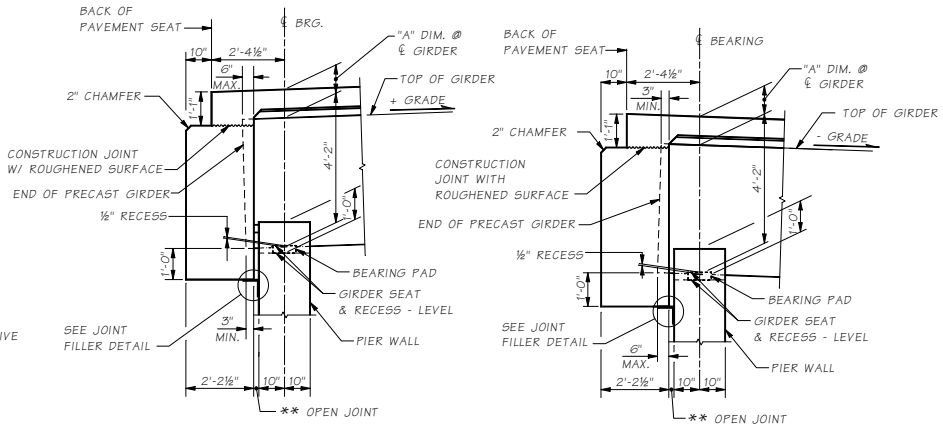

END DIAPHRAGM GEOMETRY

SECTIONS THROUGH END DIAPHRAGMS AT END PIERS
SEE "GIRDER DETAILS" SHEET FOR DIMENSION "A".
ALL LONGITUDINAL DIMENSIONS ARE NORMAL TO SKEW.

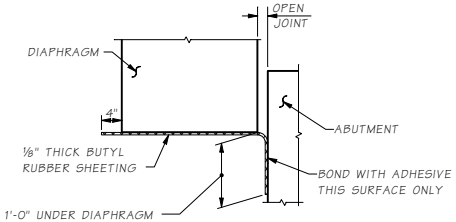

ELEVATION BUTYL RUBBER @ DIAPHRAGM

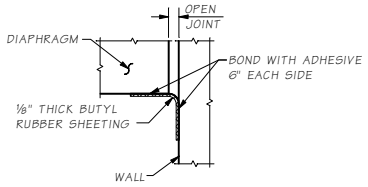

PLAN VIEW BUTYL RUBBER @ VERTICAL JOINTS

BRIDGE LENGTH	JOINT
L≤200	** = 1.5 IN.
200<L≤300	** = 2.0 IN.
300<L≤400	** = 2.5 IN.
L>400	SPECIAL DESIGN

NOTE:

1. GIRDERS SHALL BE HELD RIGIDLY IN PLACE WHEN DIAPHRAGMS ARE PLACED.
2. REINFORCING BAR SHALL BE THREADED THROUGH HOLES IN GIRDERS PRIOR TO PLACING OF EXTERIOR GIRDERS. SEE PLANS FOR "TRAFFIC BARRIER" DIMENSIONS AND LOCATION. SEE "GIRDER DETAILS" SHEET FOR DIMENSION "A".
3. END DIAPHRAGM MAY BE CAST ON GRADE. IF SO, THE UPPER LEG OF THE JOINT FILLER SHALL FORM THE BOTTOM FACE FULL WIDTH.
4. JOINT FILLER TYPE 1 SHALL BE USED TO COVER ALL VERTICAL END DIAPHRAGM JOINTS. EITHER JOINT FILLER TYPE 1 OR JOINT FILLER TYPE 2 SHALL BE USED TO COVER ALL HORIZONTAL END DIAPHRAGM JOINTS.

Bridge Design Engr.	M:\STANDARDS\Girders\PT Trapezoidal Tubs\PT_TUB_END_DIA.MAN						
Supervisor				REGION NO.	STATE	FED. AID PROJ. NO.	SHEET NO.	TOTAL SHEETS
Designed By				10	WASH.			
Checked By				JOB NUMBER				
Detailed By								
Bridge Projects Engr.								
Prelim. Plan By								
Architect/Specialist	DATE	REVISION	BY	APPD				

BRIDGE AND STRUCTURES OFFICE

Washington State Department of Transportation

STANDARD PRESTRESSED CONCRETE GIRDERS

TUB SPLICED GIRDER END DIAPHRAGM ON GIRDER DETAILS

BRIDGE SHEET NO. | SHEET | OF | SHEETS

JOB NO. | SHEET | SR 5.9-A4-7

Fri Sep 10 08:51:10 2010

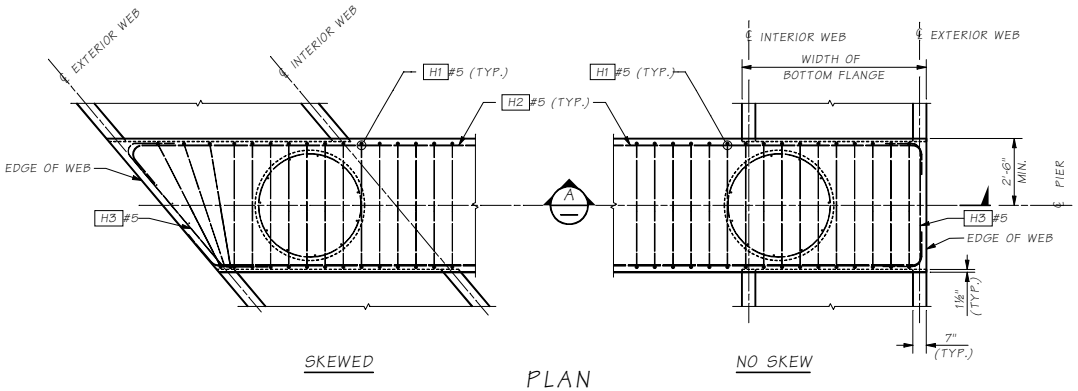

PLAN

FOR EXTENDED STRAND DETAIL SEE GIRDER SHEET 3.

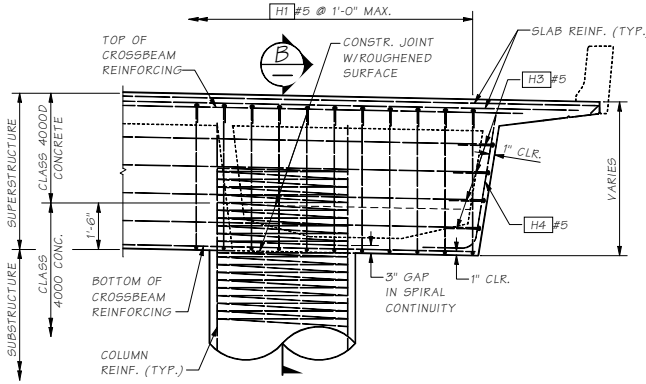

SECTION A

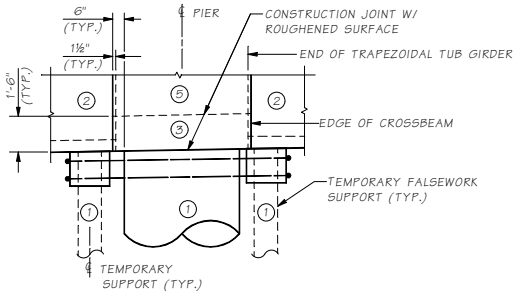

TEMPORARY SUPPORT DETAIL

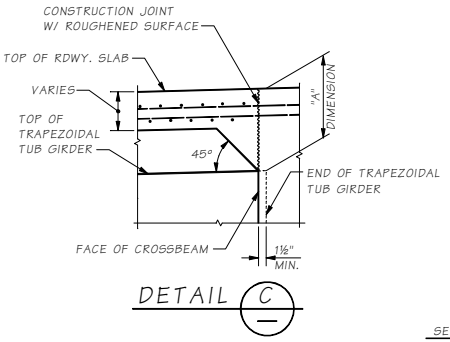

DETAIL C

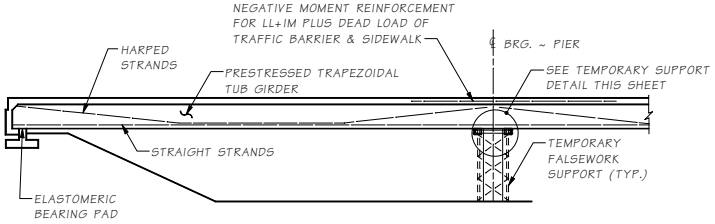

ELEVATION

CONSTRUCTION SEQUENCE

1. COLUMN & TEMP. SUPPORT
2. PLACE GIRDER ON TEMPORARY SUPPORT
3. CAST DIAPHRAGM STAGE 1
4. CAST ROADWAY SLAB
5. COMPLETE DIAPHRAGM
6. REMOVE TEMPORARY SUPPORT

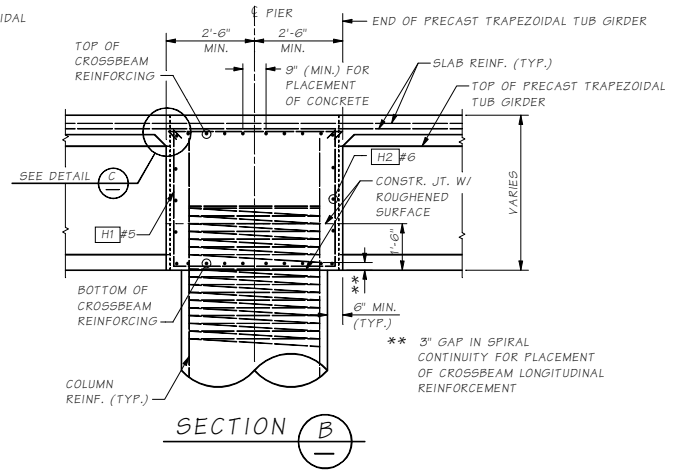

SECTION B

Bridge Design Engr.	M:\STANDARDS\Girders\PT Trapezoidal Tube\PT_TRAPEZOIDAL TUB RAISED CROSSBEAM.MAN							
Supervisor					REGION NO.	STATE	FED. AID PROJ. NO.	SHEET NO.	TOTAL SHEETS
Designed By					10	WASH.			
Checked By					JOB NUMBER				
Detailed By									
Bridge Projects Engr.									
Prelim. Plan By									
Architect/Specialist	DATE	REVISION	BY	APPD					

BRIDGE AND STRUCTURES OFFICE

Washington State Department of Transportation

STANDARD PRESTRESSED CONCRETE GIRDERS

TUB SPLICED GIRDER RAISED CROSSBEAM DETAILS

BRIDGE SHEET NO. SHEET OF SHEETS

SHEET JOB NO. 5-9-A4-8 SR

Fri Sep 10 08:51:10 2010

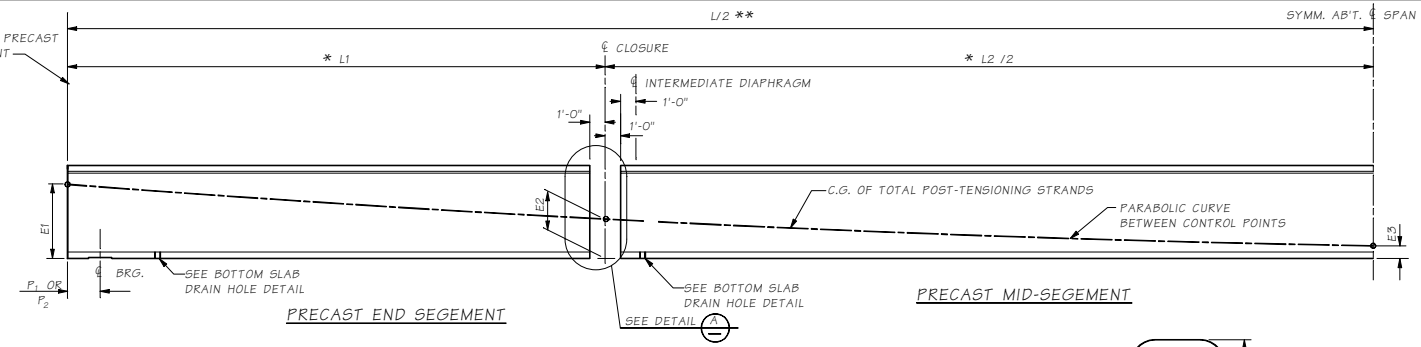

PRECAST LONGITUDINAL HALF-SECTION

SHOWING POST-TENSIONING CABLE PATHS
* MEASURED BEFORE POST-TENSIONING.

** CONTRACTOR MAY ELECT TO CAST THE PT GIRDER IN ONE PIECE IF THE SHIPPING WEIGHT IS LESS THAN 182 KIPS & THE SHIPPING ROUTE ALLOWS THE SHIPMENT OF LONG GIRDERS.

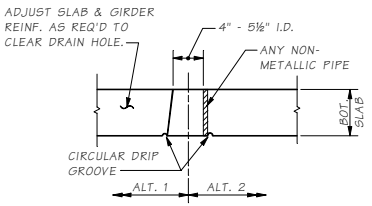

BOTTOM SLAB DRAIN HOLE

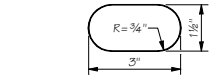

OPEN HOLE DETAIL

BOTTOM HOLE AT END TYPE "B" ONLY

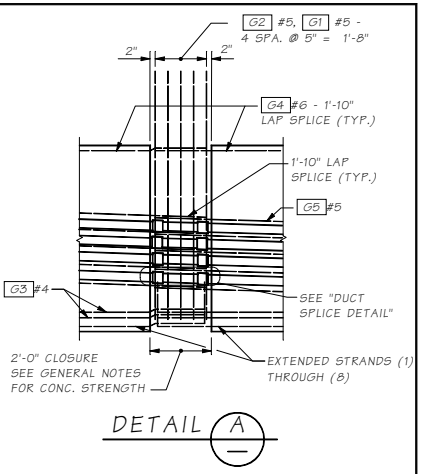

DETAIL A

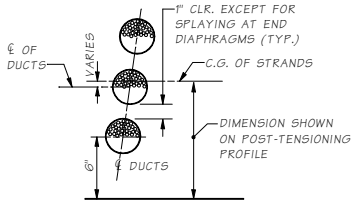

TENDON IN SAG CURVE

STRAND LOCATION DETAIL

POST-TENSIONING TABLE

SPAN	GIRDER	STRAND DIAMETER IN.	PRESSING LOAD PER WEB KIPS		TOTAL PRESTRESS LOSS KSI (DT+ES+FR+AS)	E_1 (IN.)	E_2 (IN.)	E_3 (IN.)
			JACKING	AFTER SEATING				

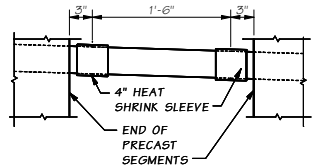

DUCT SPLICE DETAIL

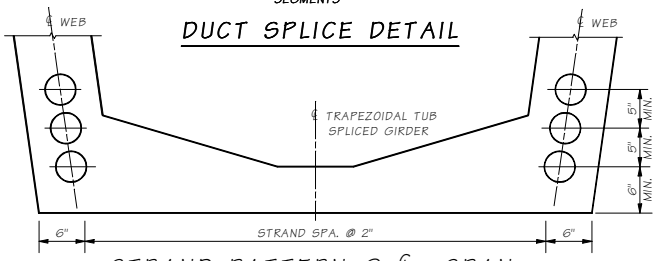

STRAND PATTERN @ ℄ SPAN

POST-TENSIONING NOTES

1. THE CAST-IN-PLACE CONCRETE IN DECK SLAB SHALL BE CLASS 4000D. THE MINIMUM COMPRESSIVE STRENGTH OF THE CAST-IN-PLACE CONCRETE AT THE WET JOINT AT THE TIME OF POST-TENSIONING SHALL BE ??? ksi.
2. THE MINIUM PRESTRESSING LOAD AFTER SEATING AND THE MINIMUM NUMBER OF PRESTRESSING STRANDS FOR EACH GIRDER SHALL BE AS SHOWN IN POST-TENSIONING TABLE.
3. THE DESIGN IS BASED ON ?? INCH DIAMETER LOW RELAXATION STRANDS WITH A JACKING LOAD FOR EACH GIRDER AS SHOWN IN POST-TENSIONING TABLE, AN ANCHOR SET OF ⅜ INCH OF CURVATURE FRICTION COEFFICIENT, μ = 0.20 AND A WOBBLE FRICTION COEFFICIENT, k = 0.0002/ft. THE ACTUAL ANCHOR SET USED BY THE CONTRACTOR SHALL BE SPECIFIED IN THE SHOP PLANS AND INCLUDED IN THE TRANSFER FORCE CALCULATIONS.
4. THE DESIGN IS BASED ON THE ESTIMATED PRESTRESS LOSS OF POST-TENSIONING STRANDS SHOWN IN POST-TENSIONING TABLE DUE TO STEEL RELAXATION, ELASTIC SHORTENING CREEP AND SHRINKAGE OF CONCRETE.
5. THE CONTRACTOR SHALL SUBMIT THE STRESSING SEQUENCE AND ELONGATION CALCULATIONS TO THE ENGINEER FOR APPROVAL. ALL LOSSES DUE TO TENDON VERTICAL AND HORIZONTAL CURVATURE MUST BE INCLUDED IN ELONGATION CALCULATIONS.
   A. THE PRESTRESSING FORCE SHALL BE DISTRIBUTED WITH AN APPROXIMATELY EQUAL AMOUNT IN EACH WEB AND SHALL BE PLACED SYMMETRICALLY ABOUT THE CENTERLINE OF THE TUB.
   B. NO MORE THAN ONE-HALF OF THE PRESTRESSING FORCE IN ANY WEB MAY BE STRESSED BEFORE AN EQUAL FORCE IS STRESSED IN THE ADJACENT WEBS. AT NO TIME DURING STRESSING OPERATION WILL MORE THAN ONE-SIXTH OF THE TOTAL PRESTRESSING FORCE IS APPLIED ECCENTRICALLY ABOUT THE CENTERLINE OF BRIDGE.
6. THE MAXIMUM OUTSIDE DIAMETER OF THE DUCT SHALL BE ??? INCHES. THE AREA OF THE DUCT SHALL BE AT LEAST 2.5 TIMES THE NET AREA OF THE PRESTRESSING STEEL IN THE DUCT.
7. ALL TENDONS SHALL BE STRESSED FROM PIER ??.
8. SIDE FORMS FROM INSIDE & OUTSDIE OF THE CLOSURES & CROSSBEAM SHALL BE REMOVED PRIOR TO POST-TENSIONING.

Bridge Design Engr.	M:\STANDARDS\Girders\PT Trapezoidal Tubs\SIP PT TRAPEZOIDAL TUB 1.MAN				BRIDGE NO.	STATE	FED. AID PROJ. NO.	SHEET NO.	TOTAL SHEETS
Supervisor									
Designed By					10	WASH.			
Checked By									
Detailed By					JOB NUMBER				
Bridge Projects Engr.									
Prelim. Plan By									
Architect/Specialist	DATE	REVISION	BY	APPD					

Fri Sep 10 08:51:10 2010

BRIDGE AND STRUCTURES OFFICE

Washington State Department of Transportation

STANDARD PRESTRESSED CONCRETE GIRDERS

TRAPEZOIDAL TUB S-I-P DECK PANEL SPLICED GIRDER DETAILS 1 OF 5

BRIDGE SHEET NO. — SHEET — OF — SHEETS

SR — JOB NO. — SHEET

5.9-A5-1

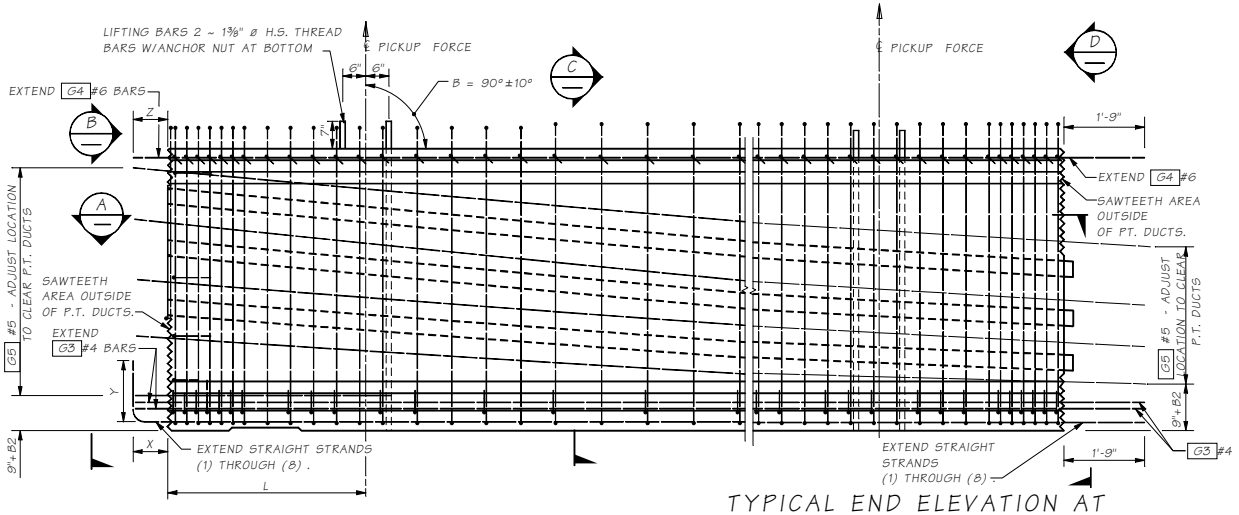

TYPICAL END ELEVATION AT END DIAPHRAGMS

TYPICAL END ELEVATION AT CLOSURE PLACEMENT

PRE-TENSIONING NOTES:

1. PLAN LENGTH SHALL BE INCREASED AS NECESSARY TO COMPENSATE FOR SHORTENING DUE TO PRESTRESS AND SHRINKAGE.
2. ALL STRAND FOR PRETENSIONING SHALL BE ??? DIAMETER LOW RELAXATION STRANDS (AASHTO M203, GRADE 270).
3. FOR END TYPES A, C AND D, CUT ALL STRANDS FLUSH WITH THE GIRDER ENDS AND PAINT WITH AN APPROVED EPOXY RESIN, EXCEPT FOR EXTENDED STRANDS AS SHOWN. FOR END TYPES B AND E CUT ALL STRANDS 1" BELOW CONCRETE SURFACE AND GROUT WITH AN APPROVED EPOXY GROUT.
4. EXTENDED STRANDS AND BARS ARE PARALLEL TO GIRDER.
5. LIFTING BARS SHALL BE 1 ⅜" DIAMETER HIGH STRENGTH THREADED BARS (AASHTO M275, GRADE 150 MINIMUM). LIFTING HARDWARE THAT CONNECTS TO THREADED BARS SHALL BE DESIGNED AND DETAILED BY THE CONTRACTOR. LIFTING FORCES ON THREAD BARS SHALL BE VERTICAL ONLY AND WITHIN 10 DEGREES OF PERPENDICULAR TO A LINE BETWEEN PICK POINTS. CONTRACTOR SHALL SUBMIT CALCULATIONS FOR APPROVAL BY THE ENGINEER IF LIFTING FORCES ARE TO BE OTHERWISE.
6. EXTRA CAUTION MUST BE EXERCISED IN HANDLING AND PLACING ALL GIRDERS. ALL GIRDERS SHALL BE CHECKED TO ENSURE THAT THEY ARE BRACED ADEQUATELY TO PREVENT TIPPING AND TO CONTROL LATERAL BENDING DURING SHIPPING.
7. THE TOP SURFACE OF THE GIRDER FLANGE SHALL BE ROUGHENED IN ACCORDANCE WITH SECTION 6-02.3(25)H.
8. FORMS FOR BEARING PAD RECESSES SHALL BE CONSTRUCTED AND FASTENED IN SUCH A MANNER AS NOT TO CAUSE DAMAGE TO THE GIRDER DURING STRAND RELEASE OPERATION.

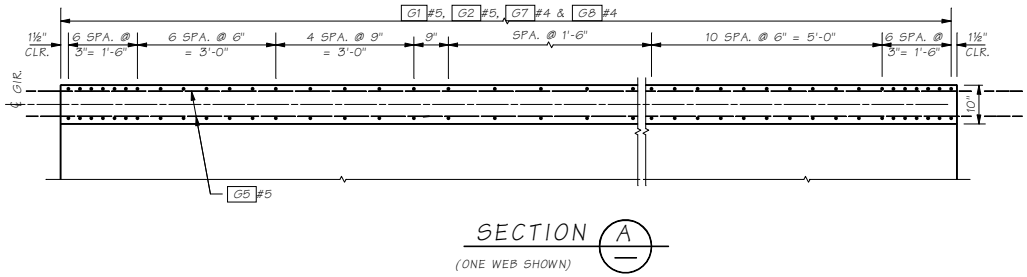

SECTION A
(ONE WEB SHOWN)

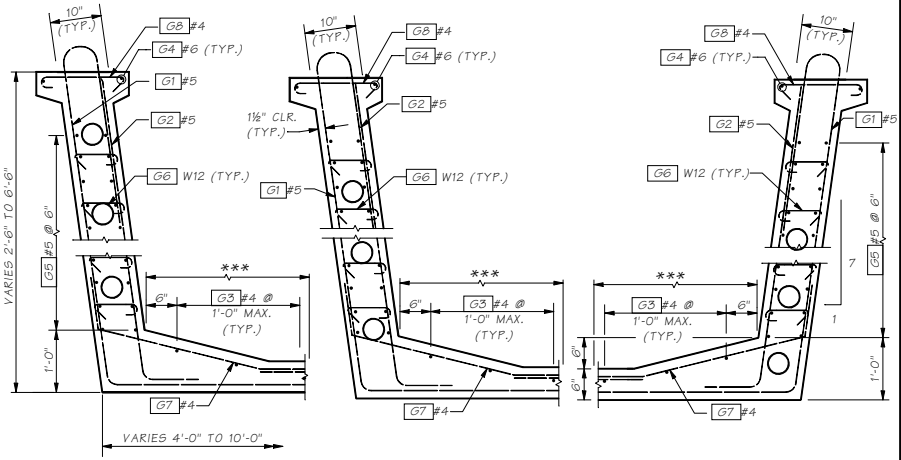

VIEW B

SECTION C

VIEW D

*** 1'-0" FOR BOTTOM FLANGE WIDTH LESS THAN 5'-6"
2'-0" FOR BOTTOM FLANGE WIDTH EQUAL OR GREATER THAN 5'-6"

Bridge Design Engr.	M:\STANDARDS\Girders\PT Trapezoidal Tubs\SIP PT TRAPEZOIDAL TUB 2.MAN								
Supervisor						RTE/ROUTE NO.	STATE	FED. AID PROJ. NO.	SHEET NO.	TOTAL SHEETS
Designed By						10	WASH.			
Checked By						JOB NUMBER				
Detailed By										
Bridge Projects Engr.										
Prelim. Plan By										
Architect/Specialist	DATE	REVISION	BY	APPD						

Fri Sep 10 08:51:10 2010

BRIDGE AND STRUCTURES OFFICE

Washington State Department of Transportation

STANDARD PRESTRESSED CONCRETE GIRDERS

TRAPEZOIDAL TUB S-I-P DECK PANEL SPLICED GIRDER - DETAILS 2 OF 5

BRIDGE SHEET NO.

SHEET OF SHEETS

SR JOB NO. SHEET

5.9-A5-2

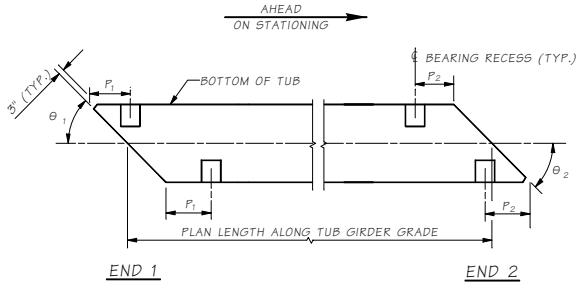

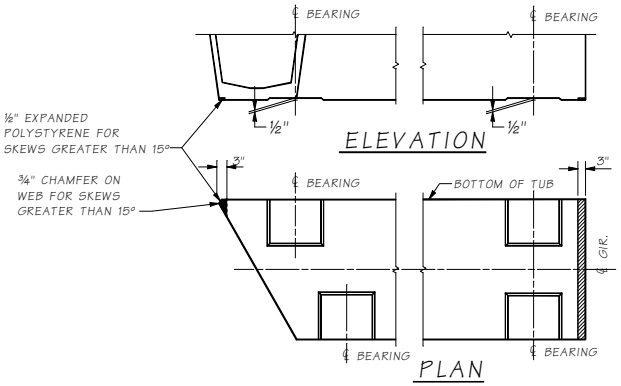

BOTTOM OF TUB SPALL PROTECTION

END TYPE "C" INTERMEDIATE HINGE DIAPHRAGM
AND END TYPE "D" INTEREMEDIATE FIXED DIAPHRAGM

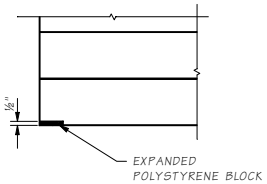

SECTION A

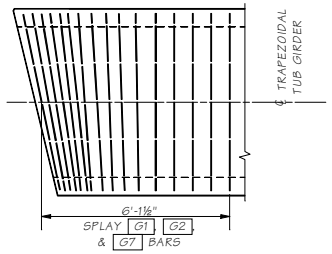

TRANSVERSE REINFORCING AT SKEWED ENDS

ONLY TRANSVERSE REINF. SHOWN

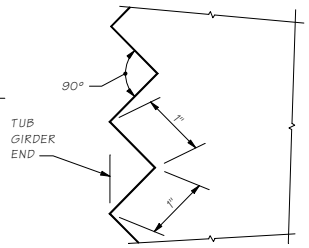

SAWTOOTH DETAILS

SAWTEETH ARE FULL WIDTH - USE SAWTEETH FULL HEIGHT ON END SECTIONS.

***THE NUMBER OF LIFTING BARS SHALL BE BASED ON 54 KIPS PER EACH 1⅜" ø BAR.

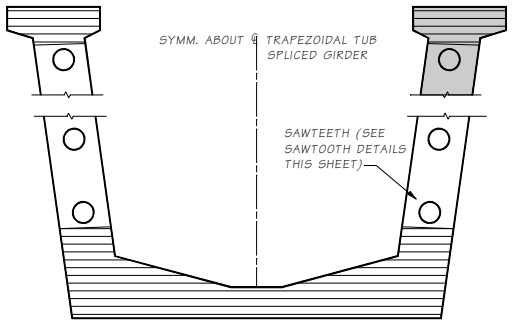

TYPICAL END ELEVATION

EXTENDED STRANDS NOT SHOWN.
USE SAWTOOTH KEYS FROM BOTTOM OF BOTTOM FLANGE TO BOTTOM OF LOWEST HARPED STRANDS.

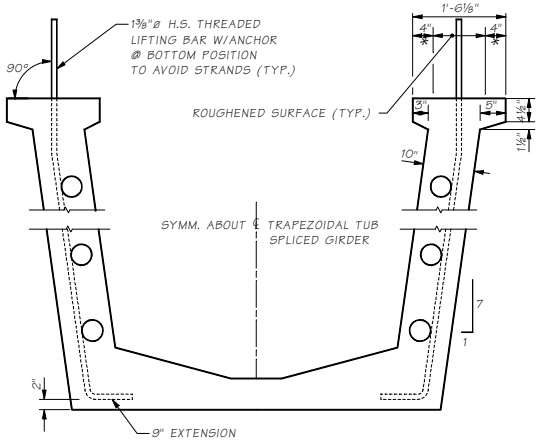

P.C. SECTION

* SMOOTH FINISH ON TOP OF GIRDER

BENDING DIAGRAM

MARK	LOCATION	SIZE	U	W	X	ALL DIMENSIONS ARE OUT TO OUT
G1	STIRRUPS, OUTSIDE WEB	5				
G2	STIRRUPS, INSIDE WEB	5				
G3	LONGITUDINAL BOTTOM FLANGE	4				STR.
G4	TOP WEB LONGITUDINAL	6				STR.
G5	LONGITUDINAL WEB	5				STR.
G6	WEB TIE	W12				≠ #4 MAY BE SUBSTITUTED FOR W12, FIELD BENDING IS OPTIONAL
G7	WEB	4				
G8	TOP TRANS. TIE	4				

* = VARIES FOR SKEWED SPANS

NOTE:
FOR DIMENSION "A", SEE "GIRDER SCHEDULE"

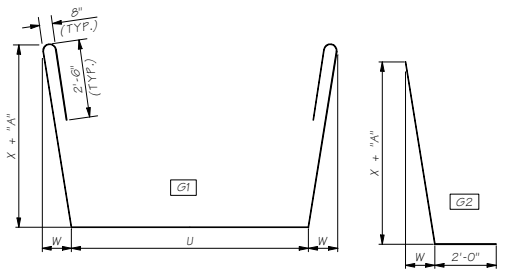

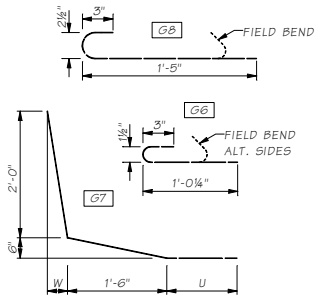

Bridge Design Engr.	M:\STANDARDS\Girders\PT Trapezoidal Tubs\SIP PT TRAPEZOIDAL TUB 3.MAN							
Supervisor					REGION NO.	STATE	FED. AID PROJ. NO.	SHEET NO.	TOTAL SHEETS
Designed By					10	WASH.			
Checked By					JOB NUMBER				
Detailed By									
Bridge Projects Engr.									
Prelim. Plan By									
Architect/Specialist	DATE	REVISION	BY	APPD					

Fri Sep 10 08:51:10 2010

BRIDGE AND STRUCTURES OFFICE

Washington State Department of Transportation

STANDARD PRESTRESSED CONCRETE GIRDERS

TRAPEZOIDAL TUB S-I-P DECK PANEL SPLICED GIRDERS - DETAILS 3 OF 5

BRIDGE SHEET NO.

SHEET OF SHEETS

SR JOB NO. SHEET

5.9-A5-3

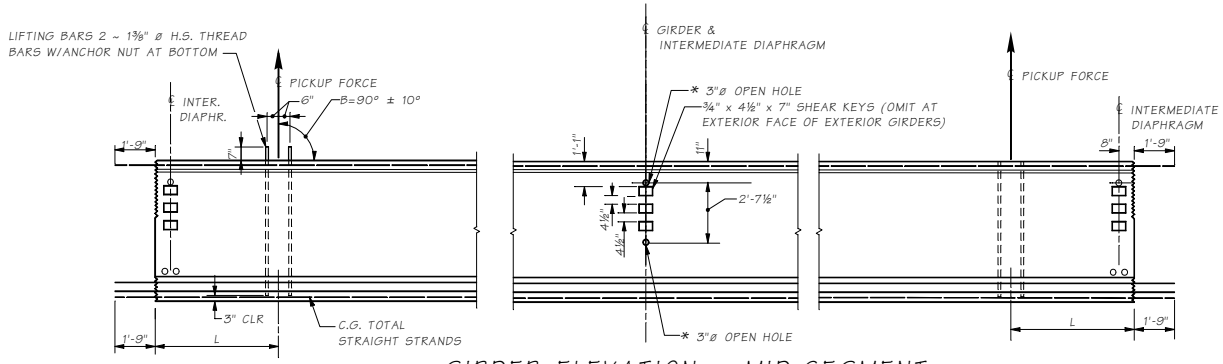

GIRDER ELEVATION ~ MID-SEGMENT

* OMIT HOLES AND PLACE INSERTS ON THE INTERIOR FACE OF EXTERIOR WEB. PLACE HOLES AND INSERTS PARALLEL TO SKEW. INSERTS SHALL BE 1" ø ROCKET/KOHLER, BURKE HI-TENSILE, LANCASTER MALLEABLE OR APPROVED EQUAL.

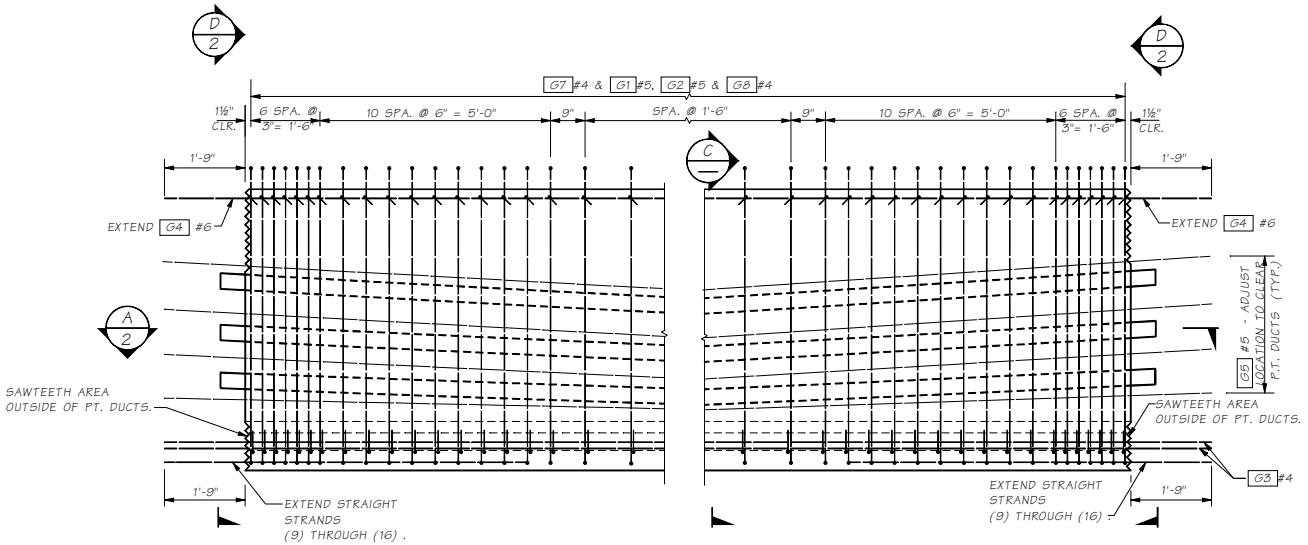

TYPICAL MID-SEGMENT ELEVATION

Bridge Design Engr.	M:\STANDARDS\Girders\PT Trapezoidal Tubs\SIP PT TRAPEZOIDAL TUB 4.MAN								
Supervisor					REGION NO.	STATE	FED. AID PROJ. NO.	SHEET NO.	TOTAL SHEETS
Designed By					10	WASH.			
Checked By					JOB NUMBER				
Detailed By									
Bridge Projects Engr.									
Prelim. Plan By									
Architect/Specialist	DATE	REVISION	BY	APP'D					

BRIDGE AND STRUCTURES OFFICE

Washington State Department of Transportation

STANDARD PRESTRESSED CONCRETE GIRDERS

TRAPEZOIDAL TUB S-I-P DECK PANEL SPLICED GIRDER - DETAILS 4 OF 5

BRIDGE SHEET NO.

SHEET OF SHEETS

JOB NO. 5.9-A5-4 SR SHEET

Fri Sep 10 08:51:11 2010

DIMENSION "A" AT ℄ BEARINGS = SEE "A" DIMENSION TABLE

SPAN	GIRDER	END SEGMENT 1													MID-SEGMENT												END SEGMENT 2											
		MINIMUM CONCRETE COMPR. STRENGTH		END 1 TYPE	END 2 TYPE	L	θ1 (DEG.)	θ2 (DEG.)	P1	PLAN LENGTH (ALONG ℄ GIRDER GRADE)	STRAIGHT		C.G. STRANDS	Ld	END 1 TYPE	END 2 TYPE	L	θ1 (DEG.)	θ2 (DEG.)	PLAN LENGTH (ALONG ℄ GIRDER GRADE)	STRAIGHT		C.G. STRANDS	Ld	END 1 TYPE	END 2 TYPE	L	θ1 (DEG.)	θ2 (DEG.)	P2	PLAN LENGTH (ALONG ℄ GIRDER GRADE)	STRAIGHT		C.G. STRANDS	Ld
		@ FINAL F'C (KSI)	@ RELEASE F'CI (KSI)								NO. OF STRANDS	JACKING FORCE (KIPS)	E									NO. OF STRANDS	JACKING FORCE (KIPS)	E										NO. OF STRANDS	JACKING FORCE (KIPS)	E	

NOTES TO DESIGNER:

1. This strand extension detail is to be used for continuous spans at moment resisting diaphragms only.This detail is not applicable to continuous spans using hinge diaphragms.
2. Designer shall calculate the exact number of extended straight strands needed to develop the required moment capacity at the end of the girder. This calculation shall be based on the tensile strength of the strands, the stresses imposed on the anchor, and concrete bearing against the projected area of the anchor.
   The total number of extended strands shall not be less than:
3. $Nps = 12(Mc + Vc \times h - M_{SIDL}) \times Nc \frac{K}{Ng} \frac{}{(0.9\ Aps \times fps \times d)}$

where:
Mc, Vc = The lesser of Elastic or Plastic hinging moment & shear capacity of column Ft-kips, kips respectively,
h = distance from top of column to c.g. of superstructure, Ft
Nc = number of columns
Ng = number of girders
Aps = area of each extended strand, in
fps = ultimate strength of strands, ksi
d = distance from top of slab to c.g. of extended strands, in
M = Moment due to SIDL (Traffic barrier, sidewalk, etc.)
K = 0.5 for L1 = L2
0.67 for L1 = 2L2

NOTE:
Dimensions shall be shown in Imperial units to the nearest 1/8th inch.

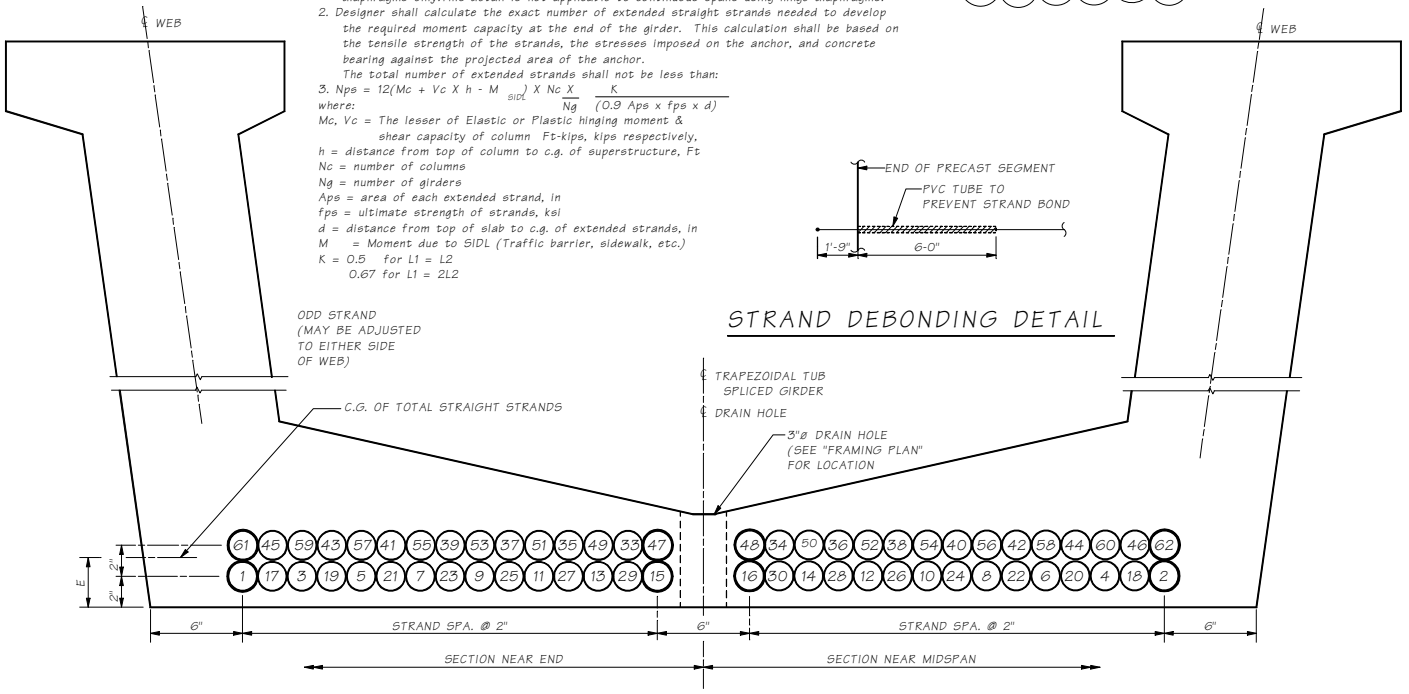

STRAND DEBONDING DETAIL

STRAND PATTERN

STRAND LOCATION SEQUENCE SHALL BE AS SHOWN (1), (2) ETC.

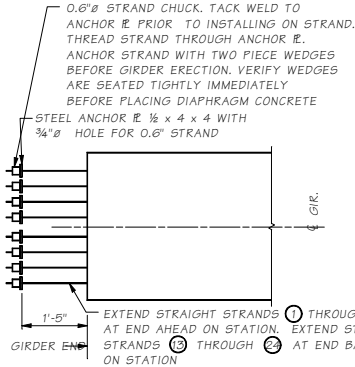

ALTERNATE # 1

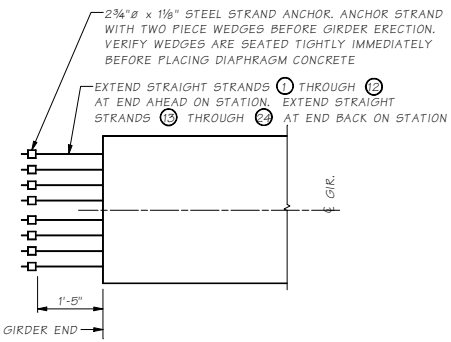

ALTERNATE # 2

STRAND EXTENSION DETAIL FOR END TYPE D

NOT ALL EXTENDED STRANDS ARE SHOWN

Bridge Design Engr.	M:\STANDARDS\Girders\PT Trapezoidal Tube\SIP PT TRAPEZOIDAL TUB 5.MAN									
Supervisor										
Designed By										
Checked By										
Detailed By										
Bridge Projects Engr.										
Prelim. Plan By										
Architect/Specialist	DATE	REVISION	BY	APPD						

BRIDGE NO.	STATE	FED. AID PROJ. NO.	SHEET NO.	TOTAL SHEETS
10	WASH.			
JOB NUMBER				

BRIDGE AND STRUCTURES OFFICE

Washington State Department of Transportation

STANDARD PRESTRESSED CONCRETE GIRDERS

TRAPEZOIDAL TUB S-I-P DECK PANEL SPLICED GIRDER - DETAILS 5 OF 5

BRIDGE SHEET NO. SHEET OF SHEETS

JOB NO. 5.9-A5-5 SHEET SR

Fri Sep 10 08:51:11 2010

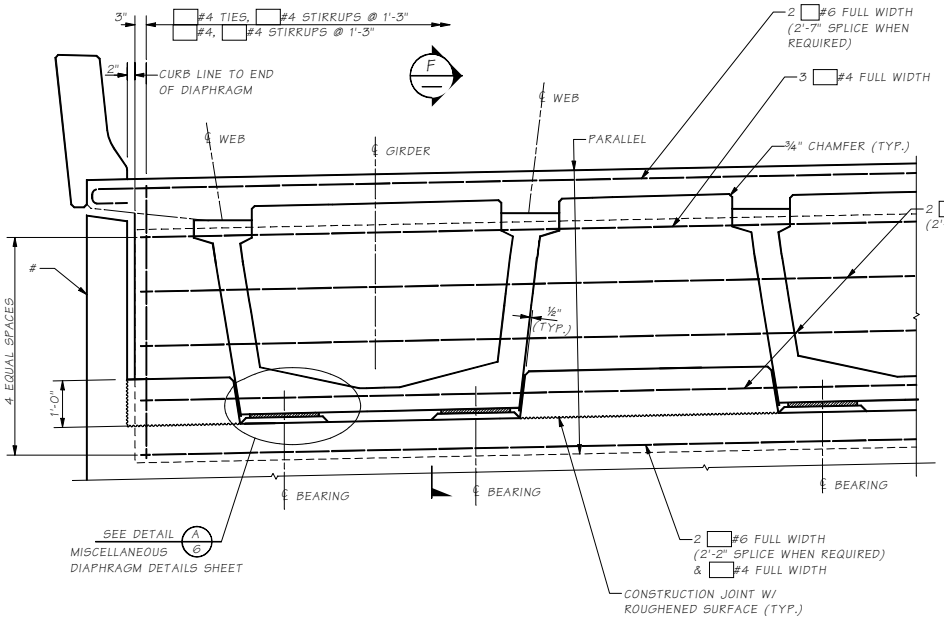

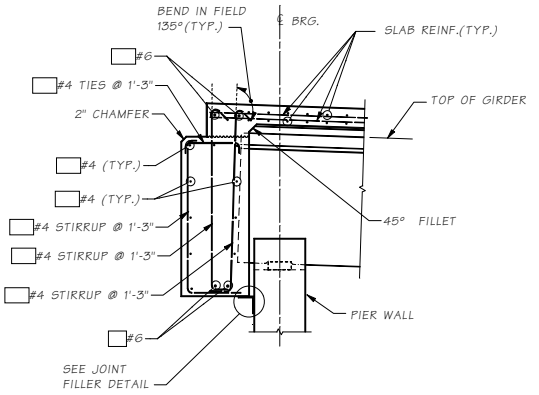

SECTION F

NOTE TO DESIGNER

If ground line is less than 2'-0" minimum below the bottom of girder at front face of abutment a curtain wall shall be provided.

TYPICAL END TYPE "A" DIAPHRAGM AT END PIERS

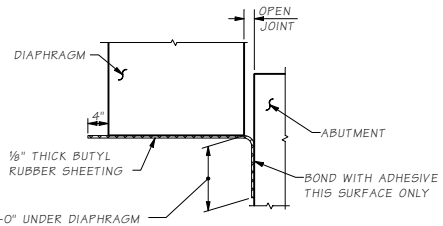

ELEVATION
BUTYL RUBBER @ DIAPHRAGM

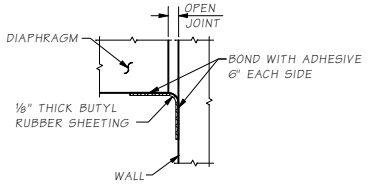

PLAN VIEW
BUTYL RUBBER @ VERTICAL JOINTS

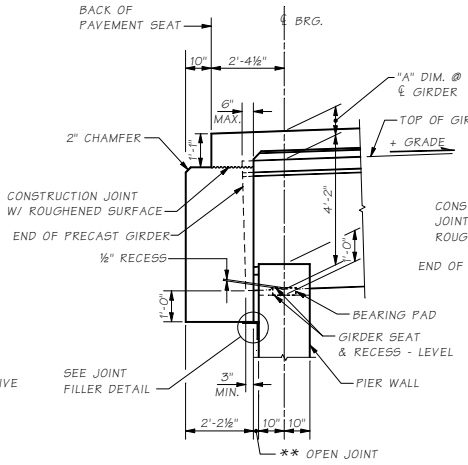

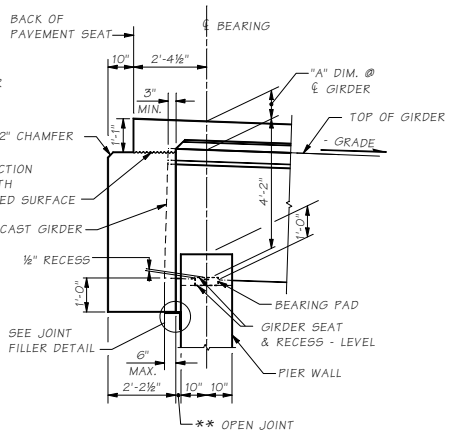

END DIAPHRAGM GEOMETRY

SECTIONS THROUGH END DIAPHRAGMS AT END PIERS
SEE "GIRDER DETAILS" SHEET FOR DIMENSION "A".
ALL LONGITUDINAL DIMENSIONS ARE NORMAL TO SKEW.

NOTE:

1. GIRDERS SHALL BE HELD RIGIDLY IN PLACE WHEN DIAPHRAGMS ARE PLACED.
2. REINFORCING BAR SHALL BE THREADED THROUGH HOLES IN GIRDERS PRIOR TO PLACING OF EXTERIOR GIRDERS. SEE PLANS FOR "TRAFFIC BARRIER" DIMENSIONS AND LOCATION. SEE "GIRDER DETAILS" SHEET FOR DIMENSION "A".
3. END DIAPHRAGM MAY BE CAST ON GRADE. IF SO, THE UPPER LEG OF THE JOINT FILLER SHALL FORM THE BOTTOM FACE FULL WIDTH.
4. JOINT FILLER TYPE 1 SHALL BE USED TO COVER ALL VERTICAL END DIAPHRAGM JOINTS. EITHER JOINT FILLER TYPE 1 OR JOINT FILLER TYPE 2 SHALL BE USED TO COVER ALL HORIZONTAL END DIAPHRAGM JOINTS.

BRIDGE LENGTH	JOINT
L≤200	** = 1.5 IN.
200<L≤300	** = 2.0 IN.
300<L≤400	** = 2.5 IN.
L>400	SPECIAL DESIGN

Bridge Design Engr.	M:\STANDARDS\Girders\PT Trapezoidal Tubs\SIP PT TRAPEZOIDAL TUB END DIA ON TUB.MAN				REGION NO.	STATE	FED. AID PROJ. NO.	SHEET NO.	TOTAL SHEETS
Supervisor					10	WASH.			
Designed By					JOB NUMBER				
Checked By									
Detailed By									
Bridge Projects Engr.									
Prelim. Plan By									
Architect/Specialist	DATE	REVISION	BY	APPD					

Fri Sep 10 08:51:11 2010

BRIDGE AND STRUCTURES OFFICE

Washington State Department of Transportation

STANDARD PRESTRESSED CONCRETE GIRDERS

TRAPEZOIDAL TUB S-I-P DECK PANEL GIRDER - END DIAPHRAGM ON GIRDER DETAILS

BRIDGE SHEET NO.

SHEET OF SHEETS

SR JOB NO. SHEET

5.9-A5-6

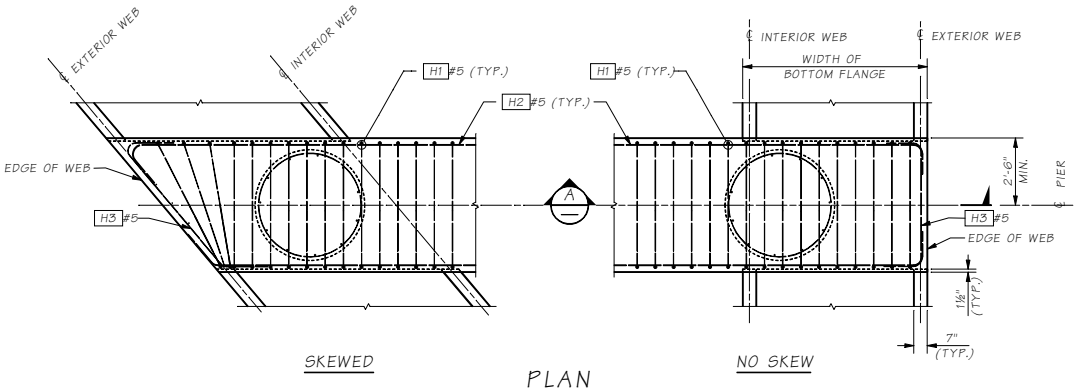

FOR EXTENDED STRAND DETAIL SEE GIRDER SHEET 3.

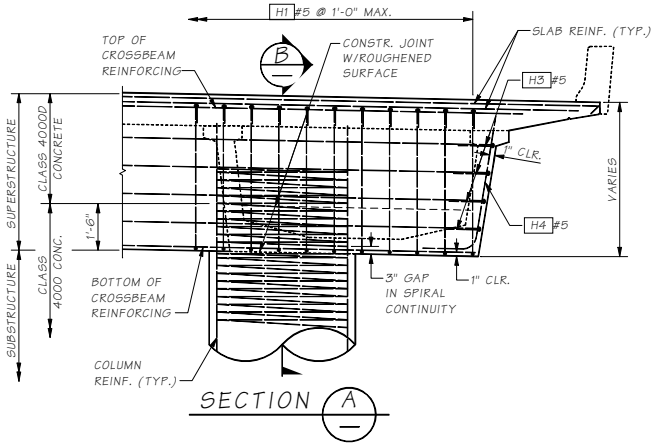

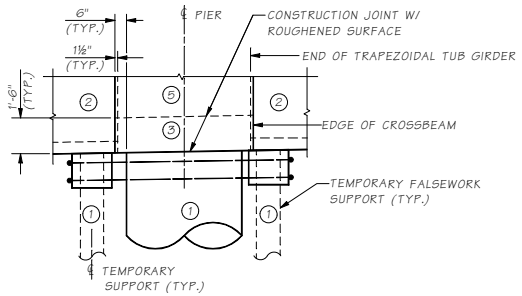

TEMPORARY SUPPORT DETAIL

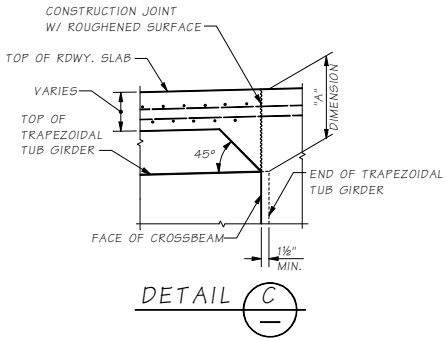

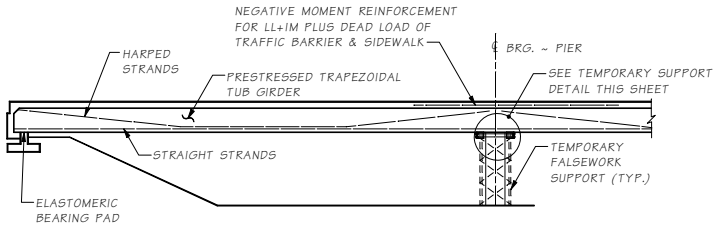

ELEVATION

CONSTRUCTION SEQUENCE

1. COLUMN & TEMP. SUPPORT
2. PLACE GIRDER ON TEMPORARY SUPPORT
3. CAST DIAPHRAGM STAGE 1
4. CAST ROADWAY SLAB
5. COMPLETE DIAPHRAGM
6. REMOVE TEMPORARY SUPPORT

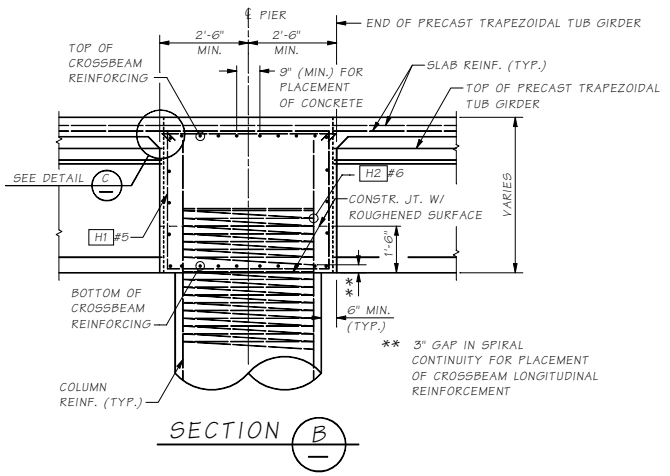

Bridge Design Engr.	M:\STANDARDS\Girders\PT Trapezoidal Tubs\SIP PT TRAPEZOIDAL TUB RAISED CROSSBEAM.MAN								
Supervisor					REGION NO.	STATE	FED. AID PROJ. NO.	SHEET NO.	TOTAL SHEETS
Designed By					10	WASH.			
Checked By					JOB NUMBER				
Detailed By									
Bridge Projects Engr.									
Prelim. Plan By									
Architect/Specialist	DATE	REVISION	BY	APP'D					

BRIDGE AND STRUCTURES OFFICE

Washington State Department of Transportation

STANDARD PRESTRESSED CONCRETE GIRDERS

TRAPEZOIDAL TUB S-I-P DECK PANEL GIRDER - RAISED CROSSBEAM DETAILS

BRIDGE SHEET NO.

SHEET OF SHEETS

SR JOB NO. SHEET

5.9-A5-7

Fri Sep 10 08:51:11 2010

Introduction

The slab haunch is the distance between the top of a girder and the bottom of the roadway slab. The haunch varies in depth along the length of the girder accommodating the girder camber and geometric effects of the roadway surface including super elevations, vertical curves and horizontal curves.

The basic concept in determining the required "A" dimension is to provide a haunch over the girder such that the top of the girder is not less than the fillet depth (typically ¾″) below the bottom of the slab at the center of the span. This provides that the actual girder camber could exceed the calculated value by 1¾″ before the top of the girder would interfere with the bottom mat of slab reinforcement.

It is desirable to have points of horizontal and vertical curvature and super elevation transitions off the bridge structure as this greatly simplifies the geometric requirements on the slab haunch. However, as new bridges are squeezed into the existing infrastructure it is becoming more common to have geometric transitions on the bridge structure.

Each geometric effect is considered independently of the others. The total geometric effect is the algebraic sum of each individual effect.

Fillet Effect

The distance between the top of the girder and the top of the roadway surface, must be at least the thickness of the roadway slab plus the fillet depth.

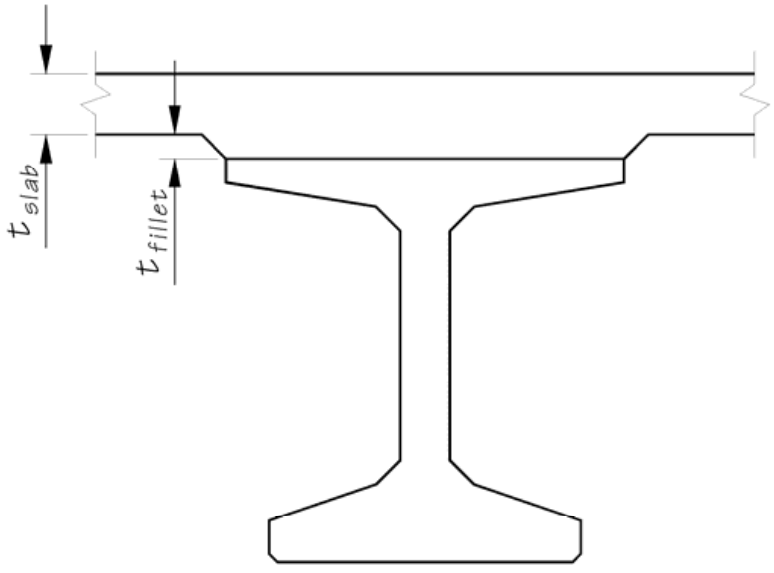

$$\Delta_{deck} = t_{slab} + t_{fillet}$$

Excessive Camber Effect

The girder haunch must be thickened to accommodate any camber that remains in the girder after slab casting. This is the difference between the "D" and "C" dimensions from the Girder Schedule Table. Use a value of 2 ½″ at the preliminary design stage to determine vertical clearance.

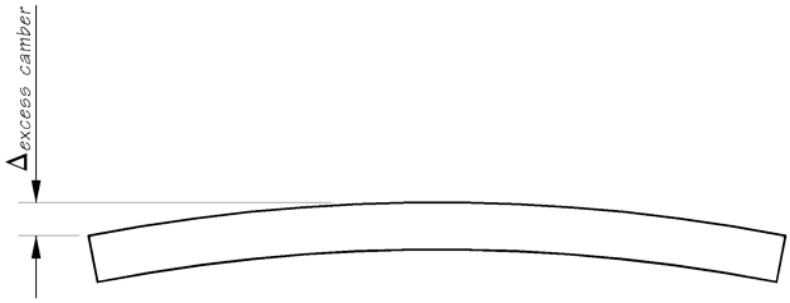

Profile Effect

The profile effect accounts for changes in the roadway profile along the length of the girder. Profile changes include grade changes, vertical curve effects, and offset deviations between the centerline of girder and the alignment caused by flared girders and/or curvature in the alignment.

When all of the girders in a span are parallel and the span is contained entirely within the limits of a vertical and/or horizontal curve, the profile effect is simply the sum of the Vertical Curve Effect and the Horizontal Curve Effect.

$$\Delta_{profile\ effect} = \Delta_{vertical\ curve\ effect} + \Delta_{horizontal\ curve\ effect} \quad \text{(5-B1.1)}$$

The horizontal curve effect is, assuming a constant super elevation rate along the length of the span,

$$\Delta_{horizontal\ curve\ effect} = \frac{1.5S^2m}{R} \quad \text{(5-B1.2)}$$

Where:

S = The length of curve in feet
R = The radius of the curve in feet
m = The crown slope

The horizontal curve effect is in inches.

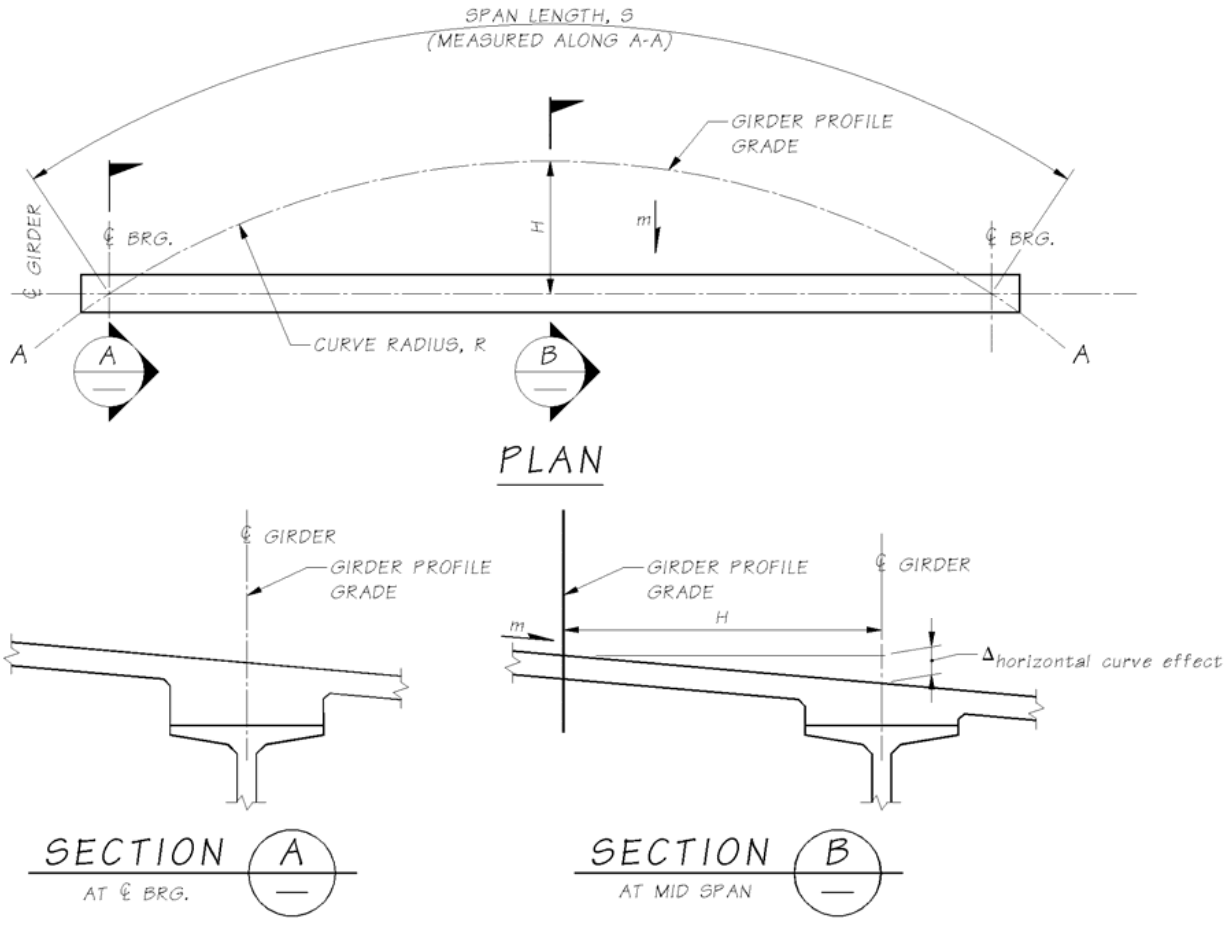

$$\Delta = \frac{S}{R} \quad \text{(5-B1.3)}$$

$$\phi = \frac{\Delta}{R} \tag{5-B1.4}$$

$$\phi = \frac{S}{4R} \tag{5-B1.5}$$

$$tan\phi \approx \phi \tag{5-B1.6}$$

$$tan\phi \approx \frac{2H}{S} \tag{5-B1.7}$$

$$H = \frac{S}{2} tan\phi \approx \frac{S}{2}\phi = \frac{S}{2} \times \frac{S}{4R} = \frac{S^2}{8R} \tag{5-B1.8}$$

$$\Delta_{horizontal\ curve\ effect} = \frac{S^2}{8R} m \times 12\frac{in}{ft} = \frac{1.5S^2}{R} m\ (inches) \tag{5-B1.9}$$

The vertical curve effect is

$$\Delta_{vertical\ curve\ effect} = \frac{1.5GL_g^2}{100L} m\ (inches) \tag{5-B1.10}$$

Where:

G = The algebraic difference in profile tangent grades $G = g_2 - g_1$ (%)
L_g^2 = The girder length in feet
L = The vertical curve length in feet

The vertical curve effect is in inches and is positive for sag curves and negative for crown curves.

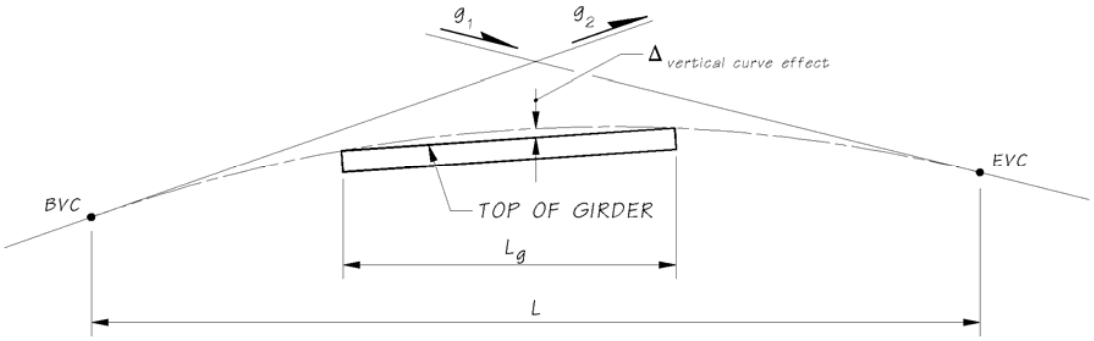

$$K = \frac{100G}{2L} \tag{5-B1.11}$$

$$\Delta_{vertical\ curve\ effect} = K\frac{L_g^2}{40{,}000} \times 12\frac{in}{ft} = \frac{G}{2L} \times \frac{L_g^2}{400} \times 12 = \frac{1.5GL_g^2}{100L} \tag{5-B1.12}$$

If one or more of the following roadway geometry transitions occur along the span, then a more detailed method of computation is required:

- Change in the super elevation rate
- Grade break
- Point of horizontal curvature
- Point of vertical curvature
- Flared girders

The exact value of the profile effect may be determined by solving a complex optimization problem. However it is much easier and sufficiently accurate to use a numerical approach.

The figure below, while highly exaggerated, illustrates that the profile effect is the distance the girder must be placed below the profile grade so that the girder, ignoring all other geometric effects, just touches the lowest profile point between the bearings.

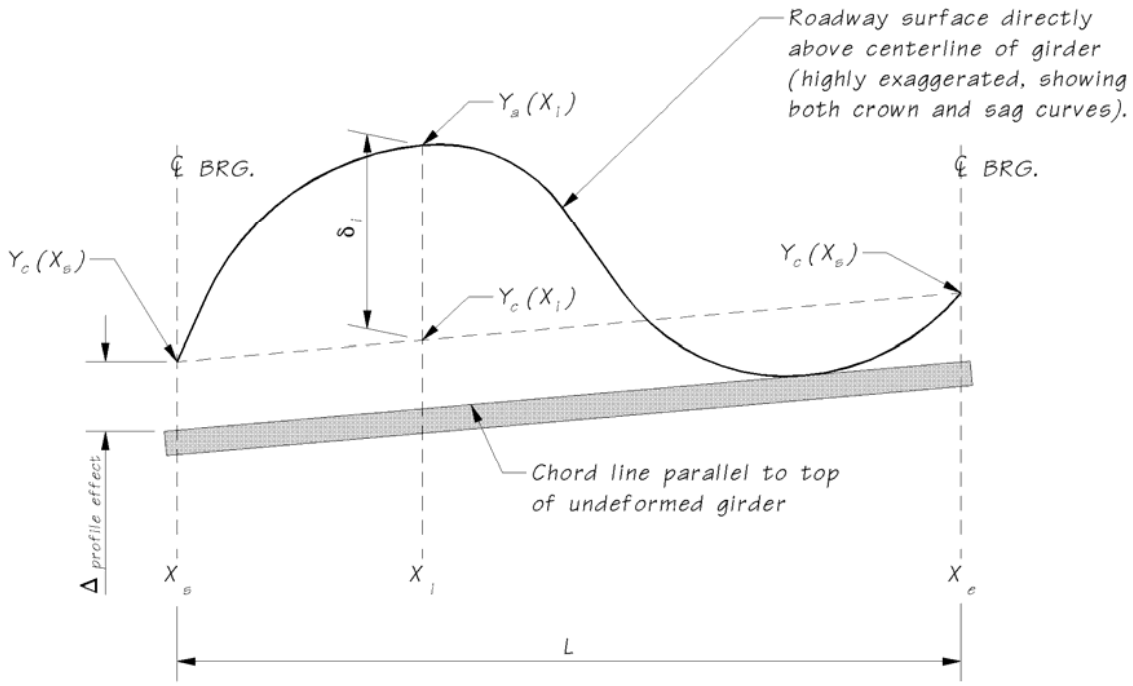

In the case of a crown curve the haunch depth may reduced. In the case of a sag curve the haunch must be thickened at the ends of the girder.

To compute the profile effect:

1. Create a chord line parallel to the top of the girder (ignoring camber) connecting the centerlines of bearing. The equation of this line is

$$y_c(x_i) = y_a(x_s, z_s) + (x_i - x_s)\left(\frac{y_a(x_e, z_e) - y_a(x_s, z_s)}{x_e - x_s}\right) \quad \text{(5-B1.13)}$$

Where:

x_i	=	Station where the elevation of the chord line is being computed
x_s	=	Station at the start of the girder
x_e	=	Station at the end of the girder
z_s	=	Normal offset from alignment to centerline of the girder at the start of the girder at station x_s
z_e	=	Normal offset from the alignment to the centerline of the girder at the end of the girder at station x_e
$y_a(x_s, z_s)$	=	Elevation of the roadway profile at station x_s and offset z_s
$y_a(x_e, z_e)$	=	Elevation of the roadway profile at station x_e and offset z_e
$y_c(x_i)$	=	Elevation of the chord line at station x_i

2. At 10th points along the span, compute the elevation of the roadway surface directly above the centerline of the girder, $y_a(x_i,z_i)$, and the elevation of the line paralleling the top of the girder, $y_c(x_i)$. The difference in elevation is the profile effect at station x_i,

$$\Delta_{profile\ effect@i} = y_c(x_i) - y_a(x_i, z_i) \quad \text{(5-B1.14)}$$

Girder Orientation Effect

The girder orientation effect accounts for the difference in slope between the roadway surface and the top of the girder. Girders such as I-beams are oriented with their Y axis plumb. Other girders such as U-beam, box beam, and slabs are oriented with their Y axis normal to the roadway surface. The orientation of the girder with respect to the roadway surface, and changes in the roadway surface along the length of the girder (super elevation transitions) define the Girder Orientation Effect.

If the super elevation rate is constant over the entire length of the span and the Y-axis of the girder is plumb, the girder orientation effect simplifies to the Top Width Effect,

$$\Delta_{girder\ orientation\ effect} = \Delta_{top\ width\ effect} = m\left(\frac{W_{top}}{2}\right) \quad \text{(5-B1.15)}$$

If the super elevation rate varies along the span, the girder orientation effect may be computed at 10th points using this equation.

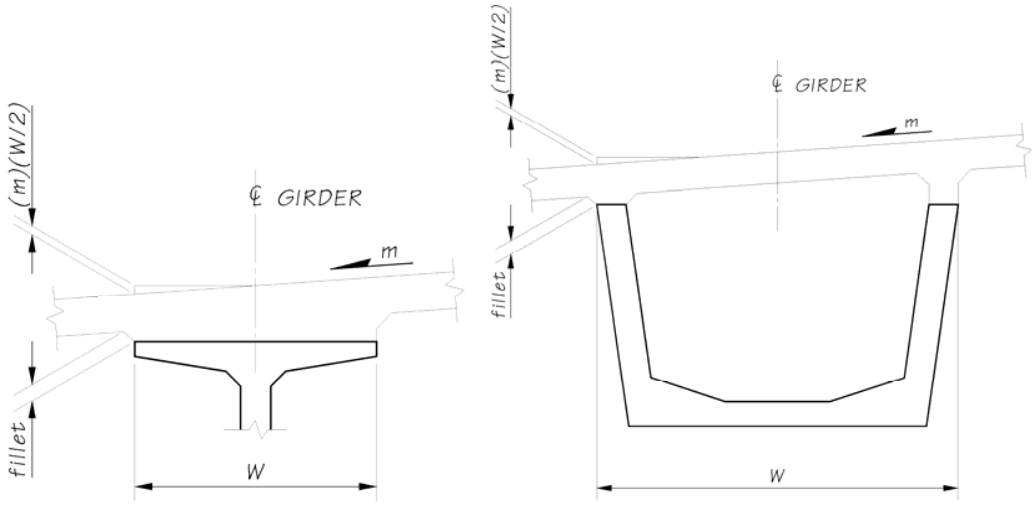

If there is a change in super elevation rate and/or the Y-axis of the girder is not plumb, then once again a more complex computation is required.

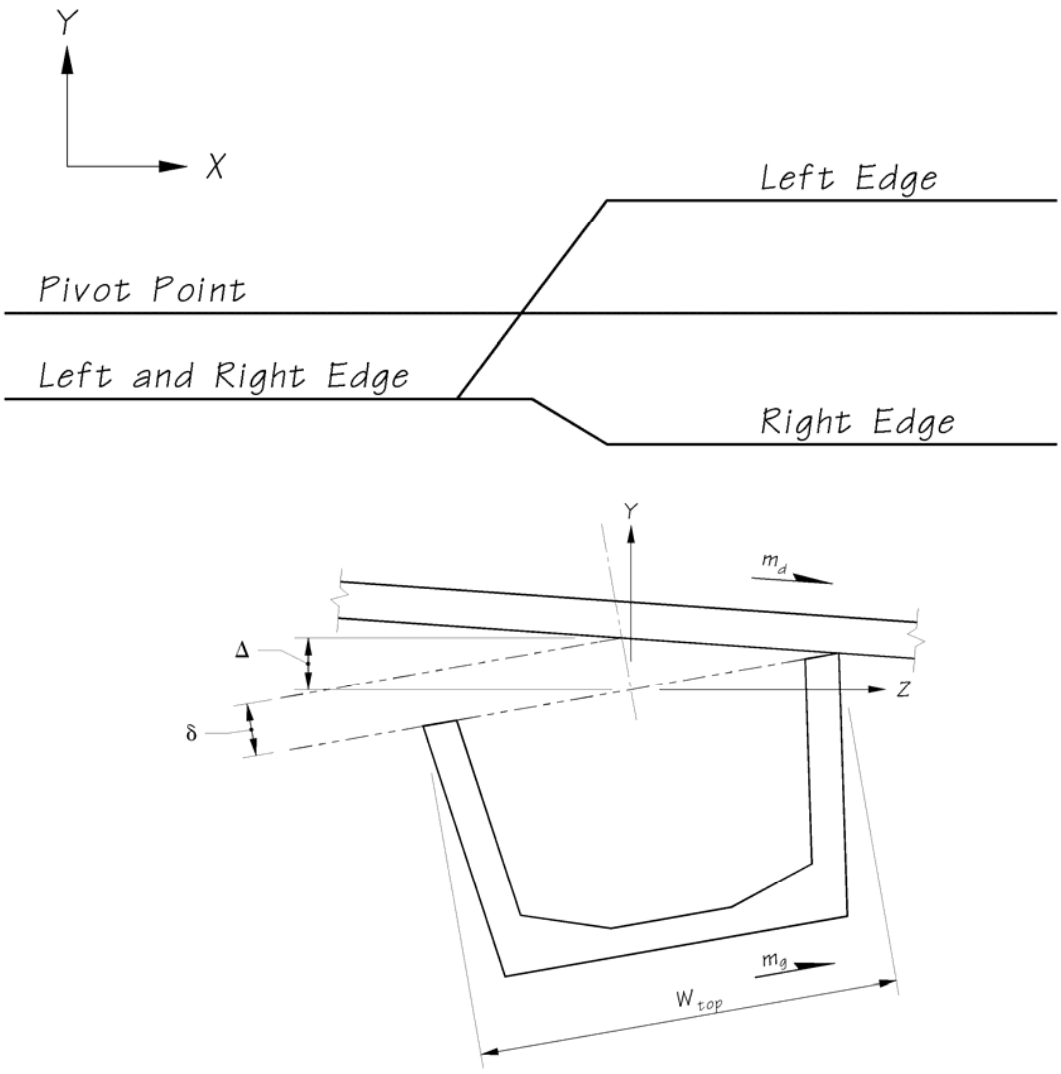

To compute the girder orientation effect at each 10th point along the girder, when the girder is not plumb:

1. Determine the cross slope, m, of the roadway surface at station x_i. If there is a crown point over the girder the cross slope is taken as

$$m(x_i, z_i) = \frac{y_a\left(x_i, z_i^{left}\right) - y_a\left(x_i, z_i^{right}\right)}{z_i^{left} - z_i^{right}} \quad \text{(5-B1.16)}$$

Where:

x_i = The station where the cross slope is being computed

z_i = Normal offset from the alignment to the centerline of the girder at the end of the girder at station x_i

z_i^{left} = Offset from the alignment to the top left edge of the girder

z_i^{right} = Offset from the alignment to the top right edge of the girder

$y_a\left(x_i, z_i^{left}\right)$ = Roadway surface elevation at station x_i and normal offset z_i^{left}

$y_a\left(x_i, z_i^{right}\right)$ = Roadway surface elevation at station x_i and normal offset z_i^{right}

2. Determine the girder orientation effect at station

$$x_i = \frac{W_{top}}{Z}\left|\frac{m - m_g}{\sqrt{1 + {m_g}^2}}\right| \quad \text{(5-B1.17)}$$

"A" Dimension

The "A" dimension is the sum of all these effects.

$$A = \Delta_{fillet} + \Delta_{excess\ camber} + \Delta_{profile\ effect} + \Delta_{girder\ orientation\ effect} \quad \text{(5-B1.18)}$$

If you have a complex alignment, determine the required "A" dimension for each section and use the greatest value.

Round "A" to the nearest ¼″.

The minimum value of "A" is

$$A_{min} = \Delta_{fillet} + \Delta_{girder\ orientation\ effect} \quad \text{(5-B1.19)}$$

If a Drain Type 5 crosses the girder, "A" shall not be less than 9″.

Limitations

These computations are for a single girder line. The required haunch should be determined for each girder line in the structure. Use the greatest "A" dimension.

These computations are also limited to a single span. A different haunch may be needed for each span or each pier. For example, if there is a long span adjacent to a short span, the long span may have considerably more camber and will require a larger haunch. There is no need to have the shorter spans carry all the extra concrete needed to match the longer span haunch requirements. With the WF series girders, the volume of concrete in the haunches can add up quickly. The shorter span could have a different haunch at each end as illustrated below.

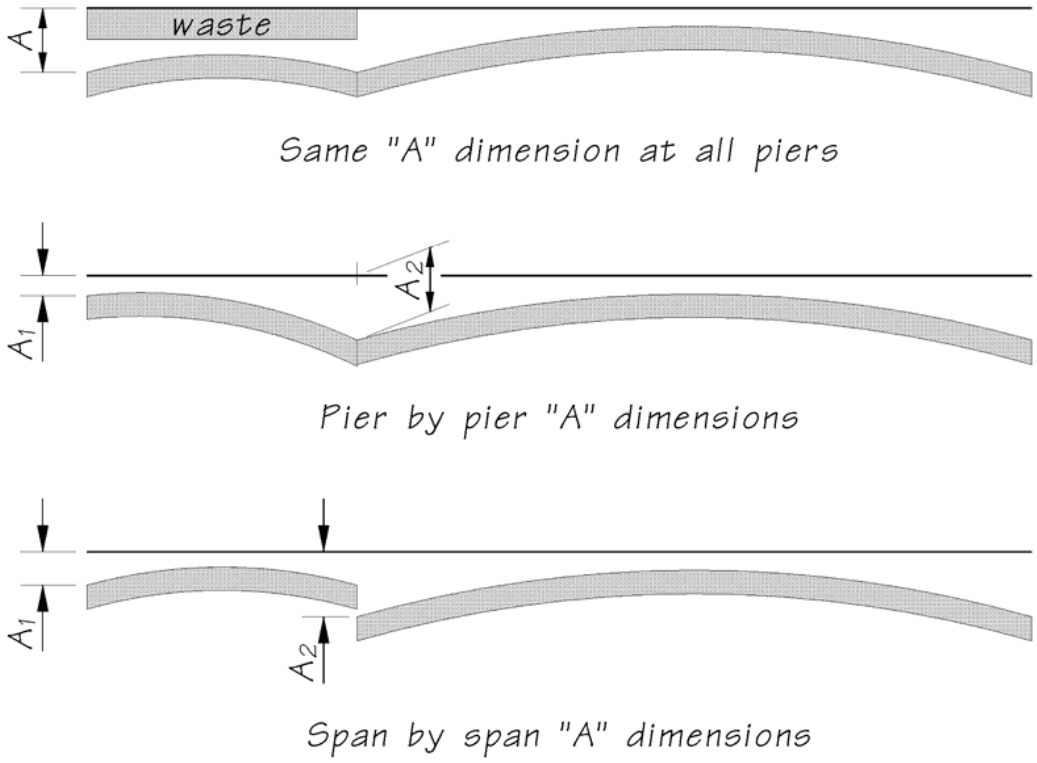

Stirrup Length and Precast Deck Leveling Bolt Considerations

For bridges on crown vertical curves, the haunch depth can become excessive to the point where the girder and diaphragm stirrups are too short to bend into the proper position. Similarly the length of leveling bolts in precast deck panels may need adjustment.

Stirrup lengths are described as a function of "A" on the standard girder sheets. For example, the G1 and G2 bars of a WF74G girder are 6′-5″+ "A" in length. For this reason, the stirrups are always long enough at the ends of the girders. Problems occur when the haunch depth increases along the length of the girder to accommodate crown vertical curves and super elevation transitions.

If the haunch depth along the girder exceeds "A" by more than 2″, an adjustment must be made. The haunch depth at any section can be compute as

$$A - \Delta_{profile\ effect} - \Delta_{excess\ camber} \qquad \text{(5-B1.20)}$$

"A" Dimension Worksheet - Simple Alignment

Fillet Effect

Slab Thickness (t_{slab}) = _____ in
Fillet Size (t_{fillet}) = _____ in
$\Delta_{fillet} = t_{slab} + t_{fillet}$ = _____ in

Excess Camber Effect

"D" Dimension from Girder Schedule (120 days) = _____ in
"C" Dimension from Girder Schedule = _____ in
$\Delta_{excess\ camber} = "D" - "C"$ = _____ in

Profile Effect

Horizontal Curve Effect, $\Delta_{horizontal\ curve\ effect} = \frac{1.5S^2m}{R}$ = _____ in

Vertical Curve Effect, $\Delta_{vertical\ curve\ effect} = \frac{1.5GL_g^2}{100L}$ = _____ in
(+ for sag, – for crown)

$\Delta_{profile} = \Delta_{horizontal\ curve\ effect} + \Delta_{vertical\ curve\ effect}$ = _____ in

Girder Orientation Effect

Girder must be plumb.

$\Delta_{girder\ orientation} = 0$ for U-beams inclined parallel to the slab

$\Delta_{girder\ orientation} = \Delta_{top\ flange\ effect} = m\left(\frac{W_{top}}{2}\right)$ = _____ in

"A" Dimension

$\Delta_{fillet} + \Delta_{excess\ camber} + \Delta_{profile\ effect} + \Delta_{girder\ orientation\ effect}$ = _____ in

Round to nearest ¼″ = _____ in
Minimum "A" Dimension, $\Delta_{fillet} + \Delta_{girder\ orientation\ effect}$ = _____ in

"A" Dimension = _____ in

Example

Slab: Thickness = 7.5″, Fillet = 0.75″

WF74G Girder: W_{top} = 49″

Span Length = 144.4 ft

Crown Slope = 0.04ft/ft

Camber: D = 7.55″, C = 2.57″

Horizontal Curve Radius = 9500 ft through centerline of bridge

Vertical Curve Data: g_1 = 2.4%, g_2 = -3.2%, L = 800 ft

Fillet Effect

Slab Thickness (t_{slab}) = 7.5″

Fillet Size (t_{fillet}) = 0.75″

$\Delta_{fillet} = t_{slab} + t_{fillet}$ = 8.25″

Excess Camber Effect

"D" Dimension from Girder Schedule (120 days) = 7.55″

"C" Dimension from Girder Schedule = 2.57″

$\Delta_{excess\ camber} = "D" - "C"$ = 4.98″

Profile Effect

Horizontal Curve Effect

Chord Length $= 144.4ft, C = 2Rsin\frac{\Delta}{2}\ \ 144.4 = 2(9500)sin\frac{\Delta}{2}\ \ \Delta = 0.87"$

Curve Length $= R\Delta\frac{\pi}{180} = 9500(0.87)\frac{\pi}{180} = 144.4ft$

$\Delta_{horizontal\ curve\ effect} = \frac{1.5S^2m}{R} = \frac{1.5(144.4)^2\ 0.04}{9500} = 0.13"$

Vertical Curve Effect $\Delta_{vertical\ curve\ effect} = \frac{1.5GL_g^2}{100L} = \frac{1.5(-5.6)(-144.4)^2}{100(800)} = -2.19"$

(+ for sag, – for crown)

$\Delta_{profile} = \Delta_{horizontal\ curve\ effect} + \Delta_{vertical\ curve\ effect} = 0.13 - 2.19 = -2.06"$

Girder Orientation Effect

$\Delta_{girder\ orientation} = \Delta_{top\ flange\ effect} = m\left(\frac{W_{top}}{2}\right) = 0.04\frac{49}{2} = 0.98"$

"A" Dimension

$\Delta_{fillet} + \Delta_{excess\ camber} + \Delta_{profile\ effect} + \Delta_{girder\ orientation\ effect}$

$= 8.25 + 4.98 - 2.06 + 0.98 = 12.15"$

Round to nearest ¼″ = 12.25″

Minimum "A" Dimension, $\Delta_{fillet} + \Delta_{girder\ orientation\ effect} = 8.25 + 0.98 = 9.23"$

"A" Dimension = 12¼″

Existing Bridge Widenings

The following listed bridge widenings are included as aid to the designer. These should not be construed as the only acceptable methods of widening; there is no substitute for the designer's creativity or ingenuity in solving the challenges posed by bridge widenings.

Bridge	SR	Contract No.	Type of Bridge	Unusual Features
NE 8th Street U'Xing	405	9267	Ps. Gir.	Pier replacements
Higgins Slough	536	9353	Flat Slab	
ER17 and AR17 O-Xing	5	9478	Box Girder	Middle and outside widening.
SR 538 O-Xing	5	9548	T-Beam	Unbalanced widening section support at diaphragms until completion of closure pour.
B-N O'Xing	5	9566	Box Girder	Widened with P.S. Girders, X-beams, and diaphragms not in line with existing jacking required to manipulate stresses, added enclusure walls.
Blakeslee Jct. E/W	5	9638	T-Beam and Box Girder	Post-tensioned X-beam, single web.
B-N O'Xing	18	9688	Box Girder	
SR 536		9696	T-Beam	Similar to Contract 9548.
LE Line over Yakima River	90	9806	Box Girder	Pier shaft.
SR 18 O-Xing	90	9823	P.S. Girder	Lightweight concrete.
Hamilton Road O-Xing	5	9894	T-Beam	Precast girder in one span.
Dillenbauch Creek	5		Flat Slab	
Longview Wye SR 432 U-Xing	5		P.S. Girder	Bridge lengthening.
Klickitat River Bridge	142		P.S. Girder	Bridge replacement.
Skagit River Bridge	5		Steel Truss	Rail modification.
B-N O-Xing at Chehalis	5			Replacement of thru steel girder span with stringer span.
Bellevue Access EBCD Widening and Pier 16 Modification	90	3846	Flat Slab and Box Girder	Deep, soft soil. Stradle best replacing single column.
Totem Lake/NE 124th I/C	405	3716	T-Beam	Skew = 55 degrees.
Pacific Avenue I/C	5	3087	Box Girder	Complex parallel skewed structures.
SR 705/SR 5 SB Added Lane	5	3345	Box Girder	Multiple widen structures.
Mercer Slough Bridge 90/43S		3846	CIP Conc. Flat Slab	Tapered widening of flat slab outrigger pier, combined footings.
Spring Street O-Xing No. 5/545SCD		3845	CIP Conc. Box Girder	Tapered widening of box girder with hingers, shafts.
Fishtrap Creek Bridge 546/8		3661	P.C. Units	Widening of existing P.C. Units. Tight constraints on substructure.
Columbia Drive O-Xing 395/16		3379	Steel Girder	Widening/Deck replacement using standard rolled sections.

Bridge	SR	Contract No.	Type of Bridge	Unusual Features
S 74th-72nd St. O-Xing No. 5/426		3207	CIP Haunched Con. Box Girder	Haunched P.C. P.T. Bath Tub girder sections.
Pacific Avenue O-Xing No. 5/332		3087	CIP Conc. Box Girder	Longitudinal joint between new and existing.
Tye River Bridges 2/126 and 2/127		3565	CIP Conc. Tee Beam	Stage construction with crown shift.
SR 20 and BNRR O-Xing No. 5/714		9220	CIP Conc. Tee Beam	Widened with prestressed girders raised crossbeam.
NE 8th St. U'Xing No. 405/43		9267	Prestressed Girders	Pier replacement — widening.
So. 212th St. U'Xing SR 167		3967	Prestressed Girders	Widening constructed as stand alone structure. Widening column designed as strong column for retrofit.
SE 232nd St. SR 18		5801	CIP Conc. Post-tensioned Box	Skew = 50 degree. Longitudinal "link pin" deck joint between new and existing to accommodate new creep.
Obdashian Bridge 2/275		N/A 1999	CIP Post-tensioned Box	Sidewalk widening with pipe struts.

Contract No.	Name	County	Award Date	Span	Width Curb Curb (ft.)	Span/ Depth	Skew Deg.	Remarks
8569	Brickyard Road U'xing	King	2/69	137 155	38	22.2	45	
9122	NE 50th Avenue U'xing	Clark	7/71	124 124	44	24.8	12	
9122	NE 69th Avenue U'xing	Clark	7/71	130 130	84	23.6	0	
9289	SE 232nd Street U'xing	King	3/72	141 133	55	23.5	51	
9448	NE 18th Street U'xing	Clark	1/73	138 138	44	22.8	17	6′ sidewalk on each side.
9737	Mill Plain Road I/C U'xing	Clark	5/74	167 172	84	22.2	8	5′ sidewalk on each side.
0862	East Zillah I/C U'xing	Yakima	10/77	178 158	40	23.0	44	
0862	Hudson Road U'xing	Yakima	10/77	151 151	30	22.6	37	
1219	Johnson Road U'xing	Yakima & Benton	8/78	156 161	34	22.7	45	
1366	Donald Road U'xing	Yakima	12/78	142 155	55	23.8	45	
1764	148th Avenue NE U'xing	King	12/79	168 157	60	21.9	41	
1788	Gap Road U'xing	Yakima	1/80	131 131	30	22.1	37	

Contract No.	Name	County	Award Date	Span	Width Curb Curb (ft.)	Span/ Depth	Skew Deg.	Remarks
2156	14-H Line U'xing	Clark	11/81	114 114	60	22.8	0	
2156	14-D Line U'xing (North)	Clark	11/81	196 196	26	21.8	Curbed 600'R	
2217	SR 12 U'xing	Benton	2/82	147 147	55	23.3	0	
2217	Keene Road U'xing	Benton	2/82	150 150	34	21.4	Curved 11,459'R	25' counterweighted cantilever spans at each end. Transv. P.T.
2207	G Line U'xing	Benton	4/82	162.4 180.6	Varies 78.6-84.6	20.5	0	30' counterweighted cantilever spans at each end. Transv. P.T.
2207	N-S Line U'xing	Benton	4/82	155 155	38	22.1	0	
2207	SR 240 Connection U'xing (R-Line)	Benton	4/82	163.5 163.5	72	20.4	0	25' counterweighted cantilever spans at each end. Transv. P.T.
2236	Road 68 I/C U'xing	Franklin	4/82	191 191	64	23.2	35	
2236	Road 100 I/C U'xing	Franklin	4/82	183 167	55	21.5	15	
2236	SR 14 I/C U'xing (Eastbound)	Franklin	4/82	170 156	26	22.4	Curved 1600'R	
2236	SR 14 I/C U'xing (Westbound)	Franklin	4/82	159 148	38	21.8	Curved 1500'R	

Contract No.	Name	County	Award Date	Span	Width Curb Curb (ft.)	Span/ Depth	Skew Deg.	Remarks
8759	Kalama River Bridge	Cowlitz		40	Varies			6′ sidewalk
	SB		2/70	200 200 40	46-53		0	on one side.
	NB		2/70	40 200 200 40	Varies 46.5	Varies	0	6′ sidewalk on one side.
8761	Valley View Road O'xing	Snohomish	2/70	88 170 88	38	25.2	0	
9102	Columbia River Bridge at Olds**	Chelan & Douglas	7/71	190 260 190	74	Varies	0	
9749	Evergreen Parkway	Thurston		100.5 145 145 114 114 87.5	26	Varies	47	Hourglass columns.
9840	W Sunset Way Ramp U'xing	King	12/74	160 159 100	26	22.9	Curved 500′R & 600′R	
1193	24F Over MD Line	Clark	8/78	129 201 129	26	Varies	0	
3794	Sen. Sam C. Guess Memorial (Division St. 2/644)		5/90	126 182 126	77	Varies	12	Replaced arch, built in two stages.

**Middle 3 spans of 7-span bridge are post-tensioned.

Contract No.	Name	County	Award Date	Span	Width Curb Curb (ft.)	Span/ Depth	Skew Deg.	Remarks
1439	SR 516 O'xing	King	3/79	63.5 133 63.5	42	24.2	40	
1580	Ahtanum Creek O'xing SB	Yakima	8/79	167 5@172 167	26	25.1	Curved 1200'R	
	NB		8/79	137 6@172 166	38	25.1	Curved 1200'R	
1950	Yakima River Bridges North Bridge	Benton	10/80	140+ 161 161 215 147	Varies 48'-100'	Varies	Curved 6000'R	Transverse post-tentioning.
	South Bridge			140+ 161 161 215 147	38	Varies	Curved 5900'R	Transverse post-tensioning. 10' bicycle and pedestrian path on one side.
2156	14-I Line	Clark	11/81	163 145 82	38	22.2	Curved 600'R	
2156	14 D Line (South)	Clark	11/81	128 171 128	26	24.4	Curved 625'R	
2207	GE Line Over G Line	Benton	4/82	90 188 90	38	23.5	Curved 1400'R	

Contract No.	Name	County	Award Date	Span	Width Curb Curb (ft.)	Span/ Depth	Skew Deg.	Remarks
2207	RA Line Over ER Line	Benton	4/82	47 104 47	55	17.3	20	Transverse post-tentioning.
2245	Pearl Street O'xing	Pierce	4/82	49 159 49	54	22.7	Curved 1400'R	
2245	6th Avenue O'xing	Pierce	4/82	43 125 43	Varies 87.4-102	22.7	Curved 1400'R & 400'R	
2327	Spokane River Bridge Stage 1	Spokane	6/82	175 255 175	76	Varies	0	Transverse post-tentioning.
***	Green River Bridge	King		118 150 99	74	Varies	22	
3794	Sen. Sam C. Guess Memorial (Division St. 2/644)		5/90	126 182 126	77	Varies (depth 5.5 to 8.5 at piers)	12	Replaced arch, built in two stages.

***Not yet to contract.

References

1. WSDOT BDM M23-50, Aug 2010
2. WSDOT Bridge Office Design Memorandums
3. AASHTO LRFD Bridge Design Specifications with Interim Revisions through 2010
4. PCI Design Handbook, 5th Ed
5. PCI Bridge Design Manual (PCI BDM)
6. PG Super Theoretical Manual
7. PCI Journal, Jul-Aug 1998, New Deep WSDOT Standard Sections Extend Spans of Prestressed Concrete Girder Bridges
8. PCI Journal, Jan-Feb 2005, Flexural Strength of Reinforced and Prestressed Concrete T-Beams

Unit Definitions and Mathcad System Constants

$kcf := kip \div ft^3$ $ORIGIN := 1$

Design Outline

(double-click hyperlink to go to sections)

1. Material Properties
2. Structure Definition
3. Computation of Section Properties
4. Loading and Limit State Parameters
5. Dead and Live Load Force Effects
6. Computation of Stresses for Dead and Live Loads
7. Prestressing Forces and Stresses
8. Stresses at Service and Fatigue Limit States
9. Strength Limit State
10. Shear & Longitudinal Reinf Design
11. Deflection and Camber
12. Lifting, Shipping, and General Stability
13. Check Results

1. Material Properties

Home

1.1 Concrete - Prestressed Girder

Minimum compressive strength at release $f'_{ci} := 7.5 \cdot ksi$ BDM 5.1.1.A.2

Nominal 28-day compressive strength $f'_c := 8.5 \cdot ksi$

Unit weight of girder concrete (for dead load) $w_c := 0.165kcf$ BDM 3.8

Unit weight of girder concrete for elastic modulus $w_{cE} := 0.155kcf$ BDM 5.1.1 D

Aggregate correction factor $K_1 := 1.0$ BDM 5.1.1.D; LRFD 5.4.2.4

Concrete modulus of elasticity BDM 5.1.1.D; LRFD 5.4.2.4

$$E_c := \begin{cases} 33000 \cdot K_1 \cdot \left(\frac{w_{cE}}{kcf}\right)^{1.5} \cdot \sqrt{\frac{f'_c}{ksi}} \cdot ksi & \text{if } f'_c \le 15ksi \\ \text{"error"} & \text{otherwise} \end{cases} = 5871 \cdot ksi$$

Concrete modulus of elasticity at transfer $E_{ci} := 33000 \cdot K_1 \cdot \left(\frac{w_{cE}}{kcf}\right)^{1.5} \cdot \sqrt{\frac{f'_{ci}}{ksi}} \cdot ksi = 5515 \cdot ksi$ BDM 5.1.1.D; LRFD 5.4.2.4

Concrete modulus of rupture for flexure $f_r := 0.24 \cdot \sqrt{\frac{f'_c}{ksi}} \cdot ksi = 0.700 \cdot ksi$ LRFD 5.4.2.6

Concrete modulus of rupture for flexure at lifting $f_{rL} := 0.24 \cdot \sqrt{\frac{f'_{ci}}{ksi}} \cdot ksi = 0.657 \cdot ksi$ LRFD 5.4.2.6

Concrete modulus of rupture to calculate minimum reinforcement $f_{r.Mcr.min} := 0.37 \cdot \sqrt{\frac{f'_c}{ksi}} \cdot ksi = 1.079 \cdot ksi$

1.2 Concrete - CIP Slab

Nominal 28-day compressive strength $f'_{cs} := 4 \cdot ksi$ BDM 5.1.1.B

Unit weight of CIP concrete (for dead load) $w_{cs} := 0.155kcf$ BDM 3.8

Unit weight of CIP concrete for elastic modulus $w_{csE} := 0.150kcf$ BDM 5.1.1 D

Concrete modulus of elasticity BDM 5.1.1.D; LRFD 5.4.2.4

$$E_{cs} := \begin{cases} 33000 \cdot K_1 \cdot \left(\frac{w_{csE}}{kcf}\right)^{1.5} \cdot \sqrt{\frac{f'_{cs}}{ksi}} \cdot ksi & \text{if } f'_c \le 15ksi \\ \text{"error"} & \text{otherwise} \end{cases} = 3834 \cdot ksi$$

Stress Block Factor $\beta_1 := \begin{cases} 0.85 & \text{if } f'_{cs} \le 4ksi \\ 0.65 & \text{if } f'_{cs} \ge 8ksi \\ 0.85 - 0.05 \cdot \frac{f'_{cs} - 4ksi}{1ksi} & \text{otherwise} \end{cases} = 0.85$ LRFD 5.7.2.2

1.3 Reinforcing steel - deformed bars

This function returns a bar diameter:

This function returns a bar area:

$$dia(bar) := \begin{cases} 0.375\cdot in & \text{if } bar = 3 \\ 0.500\cdot in & \text{if } bar = 4 \\ 0.625\cdot in & \text{if } bar = 5 \\ 0.750\cdot in & \text{if } bar = 6 \\ 0.875in & \text{if } bar = 7 \\ 1.000in & \text{if } bar = 8 \\ 1.128in & \text{if } bar = 9 \\ 1.270in & \text{if } bar = 10 \\ 1.410in & \text{if } bar = 11 \\ 1.693in & \text{if } bar = 14 \\ 2.257in & \text{if } bar = 18 \\ \text{"ERROR"} & \text{otherwise} \end{cases}$$

$$area(bar) := \begin{cases} 0.110\cdot in^2 & \text{if } bar = 3 \\ 0.197\cdot in^2 & \text{if } bar = 4 \\ 0.309\cdot in^2 & \text{if } bar = 5 \\ 0.445\cdot in^2 & \text{if } bar = 6 \\ 0.600\cdot in^2 & \text{if } bar = 7 \\ 0.786\cdot in^2 & \text{if } bar = 8 \\ 1.003\cdot in^2 & \text{if } bar = 9 \\ 1.270\cdot in^2 & \text{if } bar = 10 \\ 1.561\cdot in^2 & \text{if } bar = 11 \\ 2.251\cdot in^2 & \text{if } bar = 14 \\ 3.998\cdot in^2 & \text{if } bar = 18 \\ \text{"ERROR"} & \text{otherwise} \end{cases}$$

Yield strength	$f_y := 60\cdot ksi$	BDM 5.1.2
Elastic modulus	$E_s := 29000\cdot ksi$	LRFD 5.4.3.2

1.4 Prestressing Steel - AASHTO M-203, Uncoated, 7 Wire, Low-Relaxation Strands

Tensile strength	$f_{pu} := 270\cdot ksi$	BDM 5.1.3; LRFD 5.4.4.1
Yield strength	$f_{py} := 0.90\cdot f_{pu} = 243.0\cdot ksi$	
Strand modulus of elasticity	$E_p := 28500\cdot ksi$	LRFD 5.4.4.2
Nominal strand diameter	$d_b := 0.6\cdot in$	BDM 5.1.3
Area of wire strand	$A_p := \begin{cases} 0.153in^2 & \text{if } d_b = 0.5in \\ 0.217in^2 & \text{if } d_b = 0.6in \end{cases} = 0.217\cdot in^2$	BDM App. 5.1-A8
Transfer Length	$l_t := 60\cdot d_b = 36.0\cdot in$	BDM 5.1.3-D.1 LRFD 5.11.4.1

2. Structure Definition

Home

2.1 Bridge Geometry

Select "interior" or "exterior" girder	girder := "interior"	
Bridge width (inside curb to inside curb)	$BW := 38 \cdot ft$	
Girder spacing	$S := 6.5 \cdot ft$	BDM 5.6.4.B
Number of girder lines	$N_b := 6$	
Skew angle (for girders round to 5 deg)	$\theta_{sk} := 30 \cdot deg$	BDM 5.6.4.D.2
Design span, CL bearing to CL bearing	$L := 130ft$	
Distance from end of girder to CL bearing	$P2 := 1.973ft = 23.68 \cdot in$	
Girder length (see BDM end diaphram geometry)	$GL := L + 2 \cdot P2 = 133.946\,ft$	
Curb width on deck (see Standard Plans)	$cw := 10.5 \cdot in$	
Deck overhang (from CL of exterior girder to end of deck)	$overhang := \frac{BW - (N_b - 1) \cdot S}{2} + cw = 3.625\,ft$	
Overhang thickness at edge of slab	$o_e := 7in$	
Overhang thickness at exterior edge of top flange	$o_f := 12in$	

2.2 Concrete Deck Slab

Slab depth for design	$t_s := 7 \cdot in$	BDM 5.2.2.A; BDM 5.6.2.B.3
Depth of wearing surface	$t_{wear} := 0.5in$	
Slab depth for weight	$t_{s2} := t_s + t_{wear} = 7.50 \cdot in$	

2.3 Intermediate Diaphragms

Intermediate Diaphragm Thickness	$t_{dia} := 8in$	
Intermediate Diaphragm Height (excluding deck)	$h_{dia} := 48in$	

2.4 Prestressing

Number of harping strands	$N_h := 12$	
Number of straight strands	$N_s := 26$	
Number of temporary strands	$N_t := 6$	
Harping location from girder end	$x_h := 0.4 \cdot GL = 53.58\,ft$	BDM 5.1.3.C.2
Distance from girder bottom to lowest straight strand	$s_{bottom} := 2in$	

2.5 Site Data

Average annual relative humidity	$H := 75\%$	BDM 5.1.1.E

3. Computation of Section Properties

Home

3.1 Girder Properties

(collapsible region containing BDM Table 5.6.1-1)

Washington standard girder $girdertype := "WF74G"$

Row in BDM Table 5.6.1-1 for this girder $row := \left(match\left(girdertype, BDMTable_{5.6.1}\right)_1\right)_1 = 12.0$

Girder depth $d_g := BDMTable_{5.6.1_{row,2}} in = 74.0 \cdot in$

Girder cross-section area $A_g := BDMTable_{5.6.1_{row,3}} in^2 = 923.5 \cdot in^2$

Girder moment of inertia (strong-axis) $I_g := BDMTable_{5.6.1_{row,4}} in^4 = 734356 \cdot in^4$

Girder c.g. from girder bottom $Y_{bg} := BDMTable_{5.6.1_{row,5}} in = 35.660 \cdot in$

Girder Volume-to-surface ratio $VS_r := BDMTable_{5.6.1_{row,7}} in = 3.190 \cdot in$

Girder Weight $w_g := A_g \cdot w_c = 1.058 \cdot \frac{kip}{ft}$

Girder web width $b_w := 6.125in$

Girder top flange width $b_f := 49in$

Girder bottom flange width $b_{f.bot} := 38.375in$

Girder moment of inertia (weak axis) $I_y := 72018.4in^4$

Lifting Point from both ends of girder $L_1 := 5ft$

Shipping Point from Front (left) end of girder $L_L := 10ft$

Shipping Point from Back (right) end of girder $L_T := 10ft$

Calculated section properties

Girder c.g. to girder top $Y_{tg} := d_g - Y_{bg} = 38.340 \cdot in$

Section modulus to top of girder $S_{tg} := I_g \div Y_{tg} = 19153.8 \cdot in^3$

Section modulus to bottom of girder $S_{bg} := I_g \div Y_{bg} = 20593.3 \cdot in^3$

Shear Stirrup Reinforcement

Since the reaction force in the direction of the applied shear introduces compression into the end region, the critical section for shear may be taken at d_v from interior face of support. LRFD 5.8.3.2

d_v may be estimated using LRFD 5.8.2.9 where d_v need not be taken less than 0.72 h. Place live load LRFD 5.8.2.9

vehicle with heavy axle at d_v from support.

Estimate of d_v to determine critical section for shear calculations $d_{est} := 0.72 \cdot (d_g + t_s) = 4.86 \cdot ft$

Vertical stirrup bar size $bar_v := 5$

Define stirrup spacing for entire girder by giving stirrup reinforcing zone lengths and spacing of stirrups within each zone. Zones are defined sequentially from front of girder to the end. The sum of the zone lengths must equal the total girder length. Additional rows may be added if necessary. The first and last zones should be the clearance to the first stirrup from the end of the girder. A pair of stirrups is assumed located at the transition locations between zones.

Front End of Girder		Back End of Girder	
Zone 1 Length (end clr)	$VR_{1,1} := 1.5in$	Zone 11 Length (end clr)	$VR_{11,1} := VR_{1,1}$
Zone 1 Stirrup Spacing	$VR_{1,2} := VR_{1,1}$	Zone 11 Stirrup Spacing	$VR_{11,2} := VR_{1,2}$
Zone 2 Length	$VR_{2,1} := 20in$	Zone 10 Length	$VR_{10,1} := VR_{2,1}$
Zone 2 Stirrup Spacing	$VR_{2,2} := 2.5in$	Zone 10 Stirrup Spacing	$VR_{10,2} := VR_{2,2}$
Zone 3 Length	$VR_{3,1} := 72in$	Zone 9 Length	$VR_{9,1} := VR_{3,1}$
Zone 3 Stirrup Spacing	$VR_{3,2} := 6in$	Zone 9 Stirrup Spacing	$VR_{9,2} := VR_{3,2}$
Zone 4 Length	$VR_{4,1} := 120in$	Zone 8 Length	$VR_{8,1} := VR_{4,1}$
Zone 4 Stirrup Spacing	$VR_{4,2} := 12in$	Zone 8 Stirrup Spacing	$VR_{8,2} := VR_{4,2}$
Zone 5 Length	$VR_{5,1} := 120in$	Zone 7 Length	$VR_{7,1} := VR_{5,1}$
Zone 5 Stirrup Spacing	$VR_{5,2} := 12in$	Zone 7 Stirrup Spacing	$VR_{7,2} := VR_{5,2}$

Zone 6 Length (at girder midspan) $VR_{6,1} := GL - \sum_{i=1}^{5} VR_{i,1} - \sum_{i=7}^{11} VR_{i,1}$

Zone 6 Stirrup Spacing (at girder midspan) $VR_{6,2} := 18in$

$VR =$

	Length of Region	Stirrup Spacing
	1	2
1	1.50	1.50
2	20.00	2.50
3	72.00	6.00
4	120.00	12.00
5	120.00	12.00
6	840.35	18.00

$\cdot in$

6	940.33	18.00
7	120.00	12.00
8	120.00	12.00
9	72.00	6.00
10	20.00	2.50
11	1.50	1.50

Check if lengths of user defined shear reinforcement regions sum to the total girder length

$$chk_{3,1} := if\left(\sum_{i=1}^{rows(VR)} VR_{i,1} = GL, "OK", "NG"\right) = "OK"$$

3.2 "A" Dimension

Fillet Effect $A_{fi} := 0.75in$ BDM App 5-B1

Excessive Camber Effect (estimate) $A_{Ex} := 2.5in$

Superelevation Rate $Super := 0.02$

Length of Horizontal Curve $S_H := 0ft$

Radius of Horizontal Curve $R_H := 0ft$

Vertical Curve Length $L_{VC} := 1000ft$

Entrance Grade $g_1 := 0$ %

Exit Grade $g_2 := -0$ %

Horizontal Curve Effect

$$A_{HC} := \frac{1.5\cdot\left(S_H \div ft\right)^2\cdot Super}{R_H \div ft}\cdot in = 0.000\cdot in$$

Vertical Curve Effect

$$A_{VC} := \frac{1.5\cdot\left(g_2 - g_1\right)\cdot\left(\frac{GL}{ft}\right)^2}{100\cdot\frac{L_{VC}}{ft}}\cdot in = 0.000\cdot in$$

Girder Orientation Effect

$$A_{Orient} := Super\cdot\frac{b_f}{2} = 0.490\cdot in$$

Calculated "A" dimension

$$A_{P1} := Ceil\left(t_{s2} + A_{fi} + A_{Ex} + A_{HC} + A_{VC} + A_{Orient}, \frac{1}{4}in\right) = 11.25\cdot in$$

$$A := \max\left(A_{P1}, t_{s2} + A_{fi}\right) = 11.25\cdot in$$

3.3 Span-to-Depth Ratio (Optional Criteria)

Minimum depth (for simple span prestressed girder, including deck) $depth_{min} := 0.045\cdot L = 70.2\cdot in$ LRFD 2.5.2.6.3

Check minimum depth $chk_{3,2} := \text{if}\left(depth_{min} \le d_g + t_s, \text{"OK"}, \text{"NG"}\right) = \text{"OK"}$

3.4 Composite Section Properties

Effective flange width

LRFD 4.6.2.6.1

Check if Refined Analysis is required $chk_{3,3} := \text{if}\left(\theta_{sk} > 75deg, \text{"NG"}, \text{"OK"}\right) = \text{"OK"}$

Effective flange width for interior girder $b_i := S = 78.00 \cdot in$

Effective flange width for exterior girder $b_{ex} := 0.5 \cdot S + overhang = 82.50 \cdot in$

Effective flange width $b_e := \begin{cases} b_i & \text{if girder} = \text{"interior"} \\ b_{ex} & \text{if girder} = \text{"exterior"} \end{cases} = 78.00 \cdot in$

Transformed Slab Properties

Modular ratio $n := \frac{E_{cs}}{E_c} = 0.65$

BDM 5.6.2.B.3

Slab transformed flange width $b_{e.trans} := b_e \cdot n = 50.94 \cdot in$

Slab moment of inertia (transformed) $I_{slab} := b_{e.trans} \cdot t_s^{\,3} \div 12 = 1456.0 \cdot in^4$

Area of slab (transformed) $A_{slab} := b_{e.trans} \cdot t_s = 356.6 \cdot in^2$

c.g. of slab to bottom of girder $Y_{bs} := d_g + 0.5 \cdot t_s = 77.5 \cdot in$

Composite Section

c.g. to bottom of girder $Y_b := \frac{A_{slab} \cdot Y_{bs} + A_g \cdot Y_{bg}}{A_{slab} + A_g} = 47.31 \cdot in$

c.g. to top of girder $Y_t := d_g - Y_b = 26.69 \cdot in$

c.g. to top of slab $Y_{ts} := t_s + Y_t = 33.69 \cdot in$

Slab moment of inertia about composite N.A. $I_{slabc} := A_{slab} \cdot \left(Y_{ts} - 0.5t_s\right)^2 + I_{slab} = 326347 \cdot in^4$

Girder moment of inertia about composite N.A. $I_{gc} := A_g \cdot \left(Y_b - Y_{bg}\right)^2 + I_g = 859801 \cdot in^4$

Composite section moment of inertia $I_c := I_{slabc} + I_{gc} = 1186148 \cdot in^4$

Section modulus to bottom of girder $S_b := I_c \div Y_b = 25069 \cdot in^3$

Section modulus to top of girder $S_t := I_c \div Y_t = 44450 \cdot in^3$

Section modulus to top of slab (modified by modular ratio to get stress for correct slab effective width) $S_{ts} := \frac{I_c}{Y_{ts}}\left(\frac{1}{n}\right) = 53919 \cdot in^3$

4. Loading and Limit State Parameters

Home

4.1 Live Load Parameters

HL93 Truck/Tandem Axle Base Width $axlewidth := 6ft$ LRFD 3.6.1.2

HL93 Lane Load $w_{lane} := 0.64 \cdot kip \div ft$ LRFD 3.6.1.2.4

Number of Design Lanes

$$N_L := \begin{cases} \text{floor}\left(\frac{BW}{12 \cdot ft}\right) & \text{if } BW > 24 \cdot ft = 3.0 \\ 2 & \text{if } 24 \cdot ft \geq BW \geq 20 \cdot ft \\ 1 & \text{otherwise} \end{cases}$$ LRFD 3.6.1.1.1

Multiple Presence Factor

$$m_p := \begin{cases} \text{return } 1.20 & \text{if } N_L = 1 \quad = 0.85 \\ \text{return } 1.00 & \text{if } N_L = 2 \\ \text{return } 0.85 & \text{if } N_L = 3 \\ \text{return } 0.65 & \text{otherwise} \end{cases}$$ LRFD 3.6.1.1.2

4.2 Service Limit States

Limit states relating to stress, deformation, and crack width under regular service conditions. LRFD 5.5.2

Service I - Load combination relating to the normal operational use of the bridge. Compression in prestressed components is investigated using this load combination. LRFD 3.4.1

1.0 (DC + DW) + 1.0 (LL+IM)

Service III - Load combination relating only to tension in prestressed concrete superstructures with the objective of crack control.

1.0 (DC + DW) + 0.8 (LL+IM)

Notes:
1. Force effects due to temperature, shrinkage and creep, because of the free movement at end piers, are considered to be zero.
2. Force effects due to temperature gradient, wind, friction at bearings, and settlement are ignored.

Service III Limit State Live Load Factor $\gamma_{LLserIII} := 0.8$

4.3 Strength Limit States

Load Combinations

LRFD 3.4.1

- Strength I load combination shall be satisfied in final operational condition.
- The force effects due to temperature shrinkage and creep are ignored.

Resistance factors

LRFD 5.5.4.2.1
BDM 5.2.4.B.1

Tension-controlled precast/prestressed concrete $\phi_f := 1.0$

Precast/prestressed concrete - transition region $\phi_{pTrans}(d_t, c) := 0.583 + 0.25 \cdot \left(\frac{d_t}{c} - 1\right)$

Compression-controlled concrete with spirals or ties	$\phi_c := 0.75$	
Axial/Flexure for precast/prestressed concrete	$\phi_p(d_t, c) := \text{if}(c = 0, \phi_f, \max(\min(\phi_{pTrans}(d_t, c), \phi_f), \phi_c))$	
Shear and torsion of normal weight concrete	$\phi_v := 0.90$	

Load Factors

Dead load - Structure and Attachments	$\gamma_{DC} := 1.25$	LRFD Tables 3.4.1-1 and -2
Dead load - Wearing Surfaces and Utilities	$\gamma_{DW} := 1.5$	
Live load	$\gamma_{LL} := 1.75$	

Load Modifier

Ductility Factor	$\eta_D := 1.00$	LRFD 1.3.3
Redundancy Factor	$\eta_R := 1.00$	LRFD 1.3.4
Operational Importance Factor	$\eta_I := 1.00$	LRFD 1.3.5
Load Modifier	$\eta := \max(\eta_D \cdot \eta_R \cdot \eta_I, 0.95) = 1.0$	LRFD 1.3.2

4.4 Fatigue Limit State

The compressive stress due to the Fatigue 1 load combination and one-half the sum of effective prestress and permanent loads shall not exceed 0.40 f'c after losses. LRFD 5.5.3.1

Fatigue 1 Limit State Live Load Factor	$\gamma_{LLfat} := 1.5$	LRFD Tables 3.4.1-1 and -2

5. Dead and Live Load Force Effects

Home

Define Sections for Computation of Forces and Stresses

Define the section locations along the girder length where moments, shears and stresses are to be computed:

Girder End / Midspan / Girder End

$$SE := \begin{pmatrix} 0ft \\ P2 + 0.1L \\ P2 + 0.2L \\ P2 + 0.3L \\ P2 + 0.4L \\ P2 + 0.5L \\ P2 + 0.6L \\ P2 + 0.7L \\ P2 + 0.8L \\ P2 + 0.9L \\ GL \end{pmatrix} \quad SE = \begin{pmatrix} 0.000 \\ 14.973 \\ 27.973 \\ 40.973 \\ 53.973 \\ 66.973 \\ 79.973 \\ 92.973 \\ 105.973 \\ 118.973 \\ 133.946 \end{pmatrix} ft$$

Add Support, Harp, Critical Shear, Transfer, Lifting and Shipping Support Points to the Section Vector

Add these points only if they are not there already.

```
SE := | Sections ← SE
      | ADD ← (P2  GL − P2  0.4GL  0.6GL  P2 + d_est  GL − P2 − d_est  l_t  GL − l_t  L_1  GL − L_1  L_L  GL − L_T)
      | for j ∈ 1 .. cols(ADD)
      |     Match ← 0
      |     for i ∈ 1 .. rows(Sections)
      |       Match ← 1 if Sections_i = ADD_1,j
      |     Sections ← stack(Sections, ADD_1,j) if ¬Match
      | return Sections
```

Sort vector SE in ascending order $SE := sort(SE)$

Find Row Numbers for Points of Interest

Row number of left support $rs_L := match(P2, SE)_1 = 2.0$

Row number of right support $rs_R := match(GL - P2, SE)_1 = 22.0$

Row number of left PS Transfer point $rp := match(l_t, SE)_1 = 3.0$

Row number of left critical section for shear $rc := match(P2 + d_{est}, SE)_1 = 5.0$

Row number of left harp point $rh := match(0.4GL, SE)_1 = 10.0$

$SE =$ ft

	1
1	0.000
2	1.973
3	3.000
4	5.000
5	6.833
6	10.000
7	14.973
8	27.973
9	40.973
10	53.578
11	53.973
12	66.973
13	79.973
14	80.368
15	92.973

Row number of midspan $rm := match(P2 + 0.5L, SE)_1 = 12.0$

Row number of left lifting point $rl_1 := match(L_1, SE)_1 = 4.0$

Row number of right lifting point $rl_2 := match(GL - L_1, SE)_1 = 20.0$

Row number of left shipping (bunk) point $rb_L := match(L_L, SE)_1 = 6.0$

Row number of right shipping (bunk) point $rb_R := match(GL - L_T, SE)_1 = 18.0$

Range variable for rows of SE $i := 1 .. rows(SE)$

15	92.973
16	105.973
17	118.973
18	123.946
19	127.113
20	128.946
21	130.946
22	131.973
23	133.946

Functions for Shear and Moment

Function for moment on simple span with uniform load

w = Uniform Load
L = Simple Span Length
x = Location to determine moment

$$M_{uniform}(w, L, x) := \begin{cases} \text{return } 0kip \cdot ft \text{ if } x < 0ft \vee x > L \\ \frac{w \cdot x}{2} \cdot (L - x) \end{cases}$$

Function for shear on simple span with uniform load

w = Uniform Load
L = Simple Span Length
x = Location to determine shear

$$V_{uniform}(w, L, x) := \begin{cases} \text{return } 0kip \text{ if } x < 0ft \vee x > L \\ w \cdot \left(\frac{L}{2} - x\right) \end{cases}$$

Function for moment on simple span with point load

P = Point Load
a = Location of Point Load from left support
L = Simple Span Length
x = Location to determine moment

$$M_{point}(P, a, L, x) := \begin{cases} \text{return } 0kip \cdot ft \text{ if } x < 0ft \vee x > L \\ \text{return } 0kip \cdot ft \text{ if } a < 0ft \vee a > L \\ \frac{P \cdot (L - x) \cdot a}{L} \text{ if } 0ft \le a \le x \\ \frac{P \cdot (L - a) \cdot x}{L} \text{ if } x < a \le L \end{cases}$$

Function for shear on simple span with point load.
When a = x, the positive value is returned.

P = Point Load
a = Location of Point Load from left support
L = Simple Span Length
x = Location to determine shear

$$V_{point}(P, a, L, x) := \begin{cases} \text{return } 0kip \text{ if } x < 0ft \vee x > L \\ \text{return } 0kip \cdot ft \text{ if } a < 0ft \vee a > L \\ -\frac{P \cdot a}{L} \text{ if } 0ft \le a < x \\ \frac{P \cdot (L - a)}{L} \text{ if } x \le a \le L \end{cases}$$

Function for moment on simple span with cantilevered ends with uniform load

w = Uniform Load
a = Front cantilever length by left support
b = Back cantilever length by right support
L = Simple Span Length (between supports)
x = Location to determine moment measured from left (front) end

$$M_{cant}(w,a,b,L,x) := \begin{cases} \text{return } 0\text{kip}\cdot\text{ft} \text{ if } x < 0\text{ft} \vee x > a + L + b \\ \text{return } -\frac{w\cdot x^2}{2} \text{ if } x \le a \\ \text{return } \frac{w}{L}\cdot(a + L + b)\cdot\left(\frac{a + L + b}{2} - b\right)\cdot(x - a) - \frac{w\cdot x^2}{2} \text{ if } a < x < a + L \\ \text{return } -\frac{w\cdot(a + L + b - x)^2}{2} \text{ if } a + L \le x \end{cases}$$

5.1 Dead Load - Girder

Moments when on span supports

$$M^{\langle 1\rangle} := \begin{cases} \text{for } i \in rs_L .. rs_R \\ \quad Mom_i \leftarrow M_{uniform}(w_g, L, SE_i - P2) \\ Mom \end{cases}$$

Moments at Casting Yard (Release)

$$M^{\langle 11\rangle} := \begin{cases} \text{for } i \in 1 .. \text{rows}(SE) \\ \quad Mom_i \leftarrow M_{uniform}(w_g, GL, SE_i) \\ Mom \end{cases}$$

Shears when on span supports

$$V^{\langle 1\rangle} := \begin{cases} \text{for } i \in rs_L .. rs_R \\ \quad v_i \leftarrow V_{uniform}(w_g, L, SE_i - P2) \\ v \end{cases}$$

5.2 Dead Load - Intermediate Diaphragms

Number of Intermediate Diaphragms

$$n_{dia} := \begin{cases} \text{return } 4 \text{ if } L > 160\text{ft} \\ \text{return } 3 \text{ if } 160\text{ft} \ge L > 120\text{ft} \\ \text{return } 2 \text{ if } 120\text{ft} \ge L > 80\text{ft} \\ \text{return } 1 \text{ if } 80\text{ft} \ge L > 40\text{ft} \\ 0 \text{ otherwise} \end{cases} = 3.0 \quad \text{BDM 5.6.2}$$

Spacing of Intermediate Diaphragms along girder span

$$DiaSpacing := \frac{L}{n_{dia} + 1} = 32.5\,\text{ft}$$

Intermediate Diaphragm Length

$$Dia_L := \frac{S - b_w}{\cos(\theta_{sk})} = 82.99\cdot\text{in}$$

Approximate Weight of Intermediate Diaphrarm

$$DiaWt := \begin{cases} w_{cs}\cdot Dia_L\cdot t_{dia}\cdot h_{dia} \text{ if } girder = \text{"interior"} \\ w_{cs}\cdot Dia_L\cdot t_{dia}\cdot h_{dia}\cdot 0.5 \text{ if } girder = \text{"exterior"} \end{cases}$$

$$DiaWt = 2.859\cdot\text{kip}$$

Moments

$$M^{\langle 2 \rangle} := \left| \begin{array}{l} \text{for } i \in rs_L .. rs_R \\ \quad \left| \begin{array}{l} a \leftarrow 0\text{ft} \\ Mom_i \leftarrow 0\text{kip}\cdot\text{ft} \\ \text{for } j \in 1 .. n_{dia} \\ \quad \left| \begin{array}{l} a \leftarrow a + DiaSpacing \\ Mom_i \leftarrow Mom_i + M_{point}\left(DiaWt, a, L, SE_i - P2\right) \end{array} \right. \end{array} \right. \\ Mom \end{array} \right.$$

Shears

$$V^{\langle 2 \rangle} := \left| \begin{array}{l} \text{for } i \in rs_L .. rs_R \\ \quad \left| \begin{array}{l} a \leftarrow 0\text{ft} \\ v_i \leftarrow 0\text{kip} \\ \text{for } j \in 1 .. n_{dia} \\ \quad \left| \begin{array}{l} a \leftarrow a + DiaSpacing \\ v_i \leftarrow v_i + V_{point}\left(DiaWt, a, L, SE_i - P2\right) \end{array} \right. \end{array} \right. \\ v \end{array} \right.$$

5.3 Dead Load - Pad

The full effective pad ("A"-t) weight shall be applied over the full length of the girder. BDM 5.6.2.B.3.d

Depth of slab pad is "A" dimension minus full deck thickness

$$t_{pu} := A - t_{s2} = 3.75\cdot\text{in}$$

Weight of pad

$$w_{pu} := t_{pu}\cdot b_f\cdot w_{cs} = 0.198\cdot\frac{\text{kip}}{\text{ft}}$$

Moments

$$M^{\langle 3 \rangle} := \left| \begin{array}{l} \text{for } i \in rs_L .. rs_R \\ \quad Mom_i \leftarrow M_{uniform}\left(w_{pu}, L, SE_i - P2\right) \\ Mom \end{array} \right.$$

Shears

$$V^{\langle 3 \rangle} := \left| \begin{array}{l} \text{for } i \in rs_L .. rs_R \\ \quad v_i \leftarrow V_{uniform}\left(w_{pu}, L, SE_i - P2\right) \\ v \end{array} \right.$$

5.4 Dead Load - Slab

Weight of slab

$$w_s := \left| \begin{array}{ll} t_{s2}\cdot S\cdot w_{cs} & \text{if girder} = \text{"interior"} \\ \left[t_{s2}\cdot\left(\frac{S}{2} + \frac{b_f}{2}\right) + \frac{o_e + o_f}{2}\cdot\left(\text{overhang} - \frac{b_f}{2}\right) \right]\cdot w_{cs} & \text{if girder} = \text{"exterior"} \end{array} \right. = 0.630\cdot\frac{\text{kip}}{\text{ft}}$$

Moments

$$M^{\langle 4 \rangle} := \left| \begin{array}{l} \text{for } i \in rs_L .. rs_R \\ \quad Mom_i \leftarrow M_{uniform}\left(w_s, L, SE_i - P2\right) \\ Mom \end{array} \right.$$

Shears

$$V^{\langle 4 \rangle} := \left| \begin{array}{l} \text{for } i \in rs_L .. rs_R \\ \quad v_i \leftarrow V_{uniform}\left(w_s, L, SE_i - P2\right) \\ v \end{array} \right.$$

5.5 Dead Load - Barrier

Dead load of one traffic barrier is divided among a maximum of three girders. If the bridge has less than 6 girders, then the weight of the two barriers should be divided equally between all girders. BDM 5.6.2.B.2

Weight of one 32" F shape traffic barrier is $tb := 0.460 \cdot kip \div ft$ BDM 3.8

Weight of traffic barrier per girder

$$w_b := \left| \begin{array}{ll} \frac{2 \cdot tb}{N_b} & \text{if } N_b < 6 \\ \frac{tb}{3} & \text{otherwise} \end{array} \right. = 0.153 \cdot \frac{kip}{ft}$$

The Functions below assumes the bridge is a simple span. If the weight of barrier is to be superimposed upon spans made continuous, the function must be modified.

Moments

$$M^{\langle 5 \rangle} := \left| \begin{array}{l} \text{for } i \in rs_L .. rs_R \\ \quad Mom_i \leftarrow M_{uniform}\left(w_b, L, SE_i - P2\right) \\ Mom \end{array} \right.$$

Shears

$$V^{\langle 5 \rangle} := \left| \begin{array}{l} \text{for } i \in rs_L .. rs_R \\ \quad v_i \leftarrow V_{uniform}\left(w_b, L, SE_i - P2\right) \\ v \end{array} \right.$$

5.6 Dead Load - Future Overlay

For deck protection system 1, include the weight of a future 2" HMA overlay BDM 3.8.1

Weight of Overlay

$$w_o := \left| \begin{array}{ll} 2in \cdot S \cdot 0.140kcf & \text{if girder} = \text{"interior"} \\ 2in \cdot \left(\frac{S}{2} + overhang - cw \right) \cdot 0.140kcf & \text{if girder} = \text{"exterior"} \end{array} \right. = 0.152 \cdot \frac{kip}{ft}$$

The Functions below assume the bridge is a simple span. If the weight of future overlay is to be superimposed upon spans made continuous, the functions must be modified.

Moments

$$M^{\langle 6 \rangle} := \left| \begin{array}{l} \text{for } i \in rs_L .. rs_R \\ \quad Mom_i \leftarrow M_{uniform}\left(w_o, L, SE_i - P2\right) \\ Mom \end{array} \right.$$

Shears

$$V^{\langle 6 \rangle} := \left| \begin{array}{l} \text{for } i \in rs_L .. rs_R \\ \quad v_i \leftarrow V_{uniform}\left(w_o, L, SE_i - P2\right) \\ v \end{array} \right.$$

5.7 Live Load - AASHTO Design truck

Bending Moment

The following function finds the maximum moment due to an AASHTO HL93 Truck Load at a section a distance "x" along a simple span of length "L". A truck moving both directions is checked. LRFD 3.6.1.2.2

$$HL93TruckM(x, L) := \left| \begin{array}{l} Axles \leftarrow \begin{pmatrix} 8kip \\ 32kip \\ 32kip \end{pmatrix} \\ Locations \leftarrow \begin{pmatrix} 0ft \\ -14ft \\ -28ft \end{pmatrix} \\ rows \leftarrow rows(Locations) \\ Loc \leftarrow Locations \\ Moment \leftarrow 0kip \cdot ft \\ \text{while } Loc_{rows} \le L \\ \quad \left| \begin{array}{l} \text{for } i \in 1 .. rows \\ \quad \left| \begin{array}{l} M_i \leftarrow M_{point}\left(Axles_i, Loc_i, L, x\right) \\ Loc_i \leftarrow Loc_i + 0.01ft \end{array} \right. \\ Moment \leftarrow \max\left(\sum M, Moment\right) \end{array} \right. \\ Loc \leftarrow Locations \\ x \leftarrow L - x \\ \text{while } Loc_{rows} \le L \\ \quad \left| \begin{array}{l} \text{for } i \in 1 .. rows \\ \quad \left| \begin{array}{l} M_i \leftarrow M_{point}\left(Axles_i, Loc_i, L, x\right) \\ Loc_i \leftarrow Loc_i + 0.01ft \end{array} \right. \\ Moment \leftarrow \max\left(\sum M, Moment\right) \end{array} \right. \\ Moment \end{array} \right.$$

Range Variable for Graph

$$z := 0ft, 10ft .. L$$

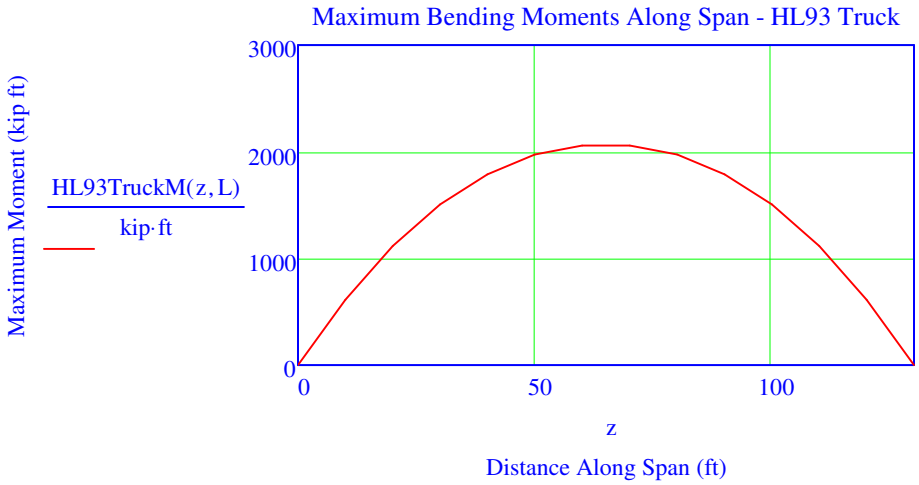

Moments

$$M^{\langle 7 \rangle} := \left| \begin{array}{l} \text{for } i \in rs_L .. rs_R \\ \quad Mom_i \leftarrow HL93TruckM\left(SE_i - P2, L\right) \\ Mom \end{array} \right.$$

Shear

The following function finds the maximum positive shear due to an AASHTO HL93 Truck Load at a section a distance "x" along a simple span of length "L". LRFD 3.6.1.2.2

$$HL93TruckVP(x, L) := \left| \begin{array}{l} Axles \leftarrow \begin{pmatrix} 8kip \\ 32kip \\ 32kip \end{pmatrix} \\ Loc \leftarrow \begin{pmatrix} 0ft \\ -14ft \\ -28ft \end{pmatrix} \\ rows \leftarrow rows(Loc) \\ Shear \leftarrow 0kip \\ \text{while } Loc_{rows} \le L \\ \quad \left| \begin{array}{l} \text{for } i \in 1 .. rows \\ \quad \left| \begin{array}{l} V_i \leftarrow V_{point}\left(Axles_i, Loc_i, L, x\right) \\ Loc_i \leftarrow Loc_i + 0.01ft \end{array} \right. \\ Shear \leftarrow \max\left(\sum V, Shear\right) \end{array} \right. \\ Shear \end{array} \right.$$

The following function finds the maximum negative shear due to an AASHTO HL93 Truck Load at a section a distance "x" along a simple span of length "L". LRFD 3.6.1.2.2

```
HL93TruckVN(x, L) := | Axles ← (32kip, 32kip, 8kip)
                     | Loc ← (0ft, −14ft, −28ft)
                     | rows ← rows(Loc)
                     | Shear ← 0kip
                     | while Loc_rows ≤ L
                     |     for i ∈ 1 .. rows
                     |         V_i ← V_point(Axles_i, Loc_i, L, x)
                     |         Loc_i ← Loc_i + 0.01ft
                     |     Shear ← min(∑V, Shear)
                     | Shear
```

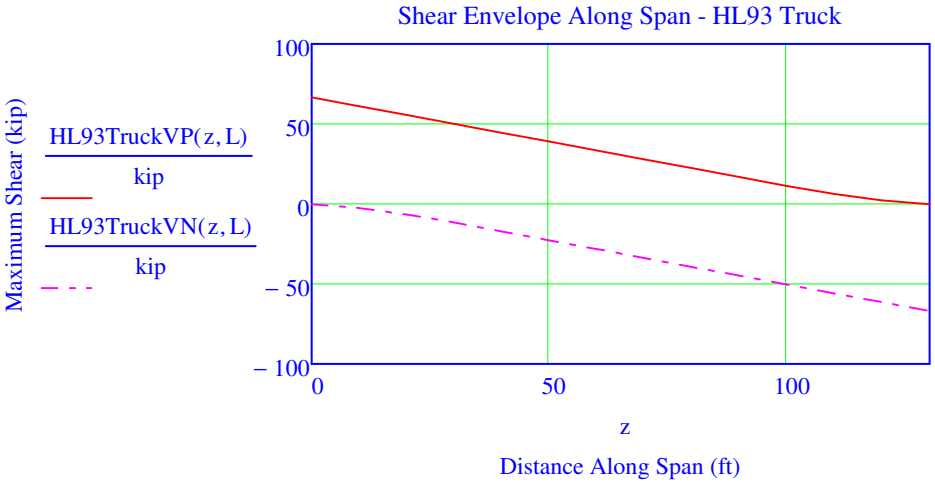

The maximum shear, positive on the first half and negative on the second half, will be returned by the following function. At the centerline of girder, only the positive value is returned.

```
V^⟨7⟩ := | for i ∈ rs_L .. rs_R
         |     v_i ← if(SE_i ≤ GL/2, HL93TruckVP(SE_i − P2, L), HL93TruckVN(SE_i − P2, L))
         | v
```

5.8 Live Load - AASHTO Tandem

Bending Moment

The following function finds the maximum moment due to an AASHTO HL93 Tandem Load at a section a LRFD 3.6.1.2.3

distance "x" along a simple span of length "L".

```
HL93TandemM(x, L) := | Axles ← (25kip, 25kip)
                     | Locations ← (0ft, −4ft)
                     | rows ← rows(Locations)
                     | Moment ← 0kip·ft
                     | while Locations_rows ≤ L
                     |     for i ∈ 1 .. rows
                     |         M_i ← M_point(Axles_i, Locations_i, L, x)
                     |         Locations_i ← Locations_i + 0.01ft
                     |     Moment ← max(∑M, Moment)
                     | Moment
```

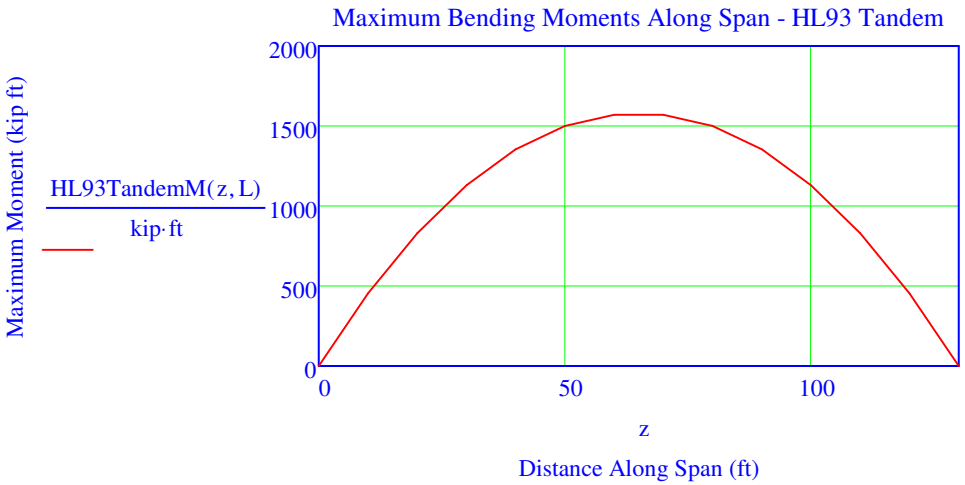

Moments

```
M^⟨8⟩ := | for i ∈ rs_L .. rs_R
         |     Mom_i ← HL93TandemM(SE_i − P2, L)
         | Mom
```

Shear

The following function finds the maximum positive shear due to an AASHTO HL93 Tandem Load at a section a distance "x" along a simple span of length "L". LRFD 3.6.1.2.3

```
HL93TandemVP(x, L) :=
    Axles ← (25kip, 25kip)
    Locations ← (0ft, −4ft)
    rows ← rows(Locations)
    Shear ← 0kip
    while Locations_rows ≤ L
        for i ∈ 1 .. rows
            V_i ← V_point(Axles_i, Locations_i, L, x)
            Locations_i ← Locations_i + 0.01ft
        Shear ← max(∑V, Shear)
    Shear
```

The following function finds the maximum negative shear due to an AASHTO HL93 Tandem Load at a section a distance "x" along a simple span of length "L". LRFD 3.6.1.2.3

```
HL93TandemVN(x, L) :=
    Axles ← (25kip, 25kip)
    Locations ← (0ft, −4ft)
    rows ← rows(Locations)
    Shear ← 0kip
    while Locations_rows ≤ L
        for i ∈ 1 .. rows
            V_i ← V_point(Axles_i, Locations_i, L, x)
            Locations_i ← Locations_i + 0.01ft
        Shear ← min(∑V, Shear)
    Shear
```

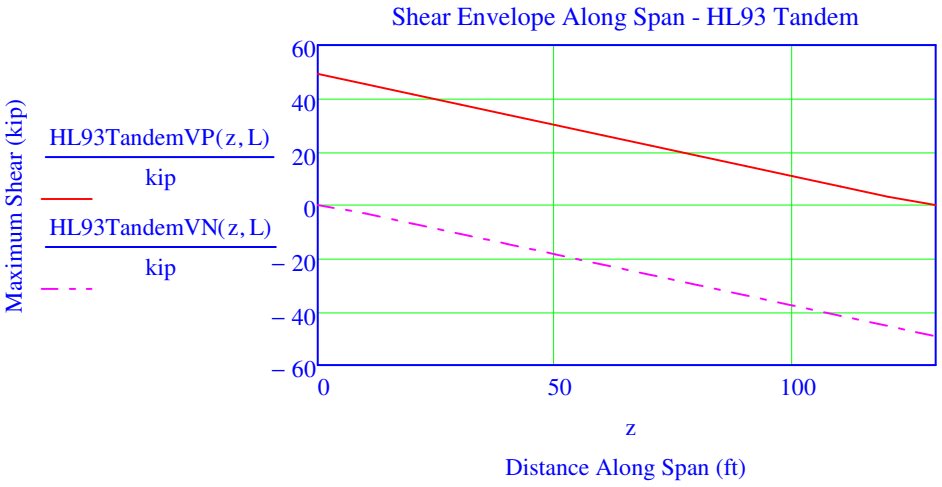

The maximum shear, positive on the first half and negative on the second half, will be returned by the following function. At the centerline of girder, only the positive value is returned.

$$V^{\langle 8 \rangle} := \left| \begin{array}{l} \text{for } i \in rs_L .. rs_R \\ \quad v_i \leftarrow \text{if}\left(SE_i \le \frac{GL}{2}, HL93TandemVP\left(SE_i - P2, L\right), HL93TandemVN\left(SE_i - P2, L\right) \right) \\ v \end{array} \right.$$

5.9 Live Load - AASHTO Lane Load

Moments

$$M^{\langle 9 \rangle} := \left| \begin{array}{l} \text{for } i \in rs_L .. rs_R \\ \quad Mom_i \leftarrow M_{uniform}\left(w_{lane}, L, SE_i - P2\right) \\ Mom \end{array} \right.$$

Maximum positive shear at a point on the span occurs when the lane load occupies the part of the span to the right of that point. Maximum negative shear at a point on the span occurs when the lane load occupies the part of the span to the left of that point.

Shears

$$V^{\langle 9 \rangle} := \left| \begin{array}{l} \text{for } i \in rs_L .. rs_R \\ \quad v_i \leftarrow \text{if}\left[SE_i \le \frac{GL}{2}, \frac{w_{lane} \cdot \left[L - \left(SE_i - P2 \right) \right]^2}{2 \cdot L}, -\frac{w_{lane} \cdot \left(SE_i - P2 \right)^2}{2 \cdot L} \right] \\ v \end{array} \right.$$

5.10 Maximum Live Load including Dynamic Load Allowance, per lane

The dynamic load allowance shall not applied to pedestrian loads or to the design lane load.

Dynamic Load All. for all limit states except Fatigue $IM := 33 \cdot \%$ LRFD 3.6.2.1

Moments

$$M^{\langle 10 \rangle} := \left| \begin{array}{l} \text{for } i \in 1 .. \text{rows}(SE) \\ \quad Mom_i \leftarrow \max\left(M_{i,7}, M_{i,8}\right) \cdot (1 + IM) + M_{i,9} \\ Mom \end{array} \right.$$

The maximum shear, positive on the first half and negative on the second half, will be returned by the following function. At the centerline of girder, only the positive value is returned.

$$V^{\langle 10 \rangle} := \left| \begin{array}{l} \text{for } i \in 1 .. \text{rows}(SE) - 1 \\ \quad v_i \leftarrow \text{if}\left[SE_i \le \frac{GL}{2}, \max\left(V_{i,7}, V_{i,8}\right) \cdot (1 + IM) + V_{i,9}, \min\left(V_{i,7}, V_{i,8}\right) \cdot (1 + IM) + V_{i,9} \right] \\ v \end{array} \right.$$

Create final row with zeros for shear matrix $V_{\text{rows}(SE),1} := 0\text{kip}$

5.11 Fatigue Live Load

Bending Moment

The following function finds the maximum moment due to an AASHTO Fatigue Truck Load with 30 foot spacing between 32kip axles at a section a distance "x" along a simple span of length "L". A truck moving both directions is checked. LRFD 3.6.1.4

$$HL93TruckMFat(x, L) := \left| \begin{array}{l} Axles \leftarrow \begin{pmatrix} 8\text{kip} \\ 32\text{kip} \\ 32\text{kip} \end{pmatrix} \\ Locations \leftarrow \begin{pmatrix} 0\text{ft} \\ -14\text{ft} \\ -44\text{ft} \end{pmatrix} \\ rows \leftarrow \text{rows}(Locations) \\ Loc \leftarrow Locations \\ Moment \leftarrow 0\text{kip} \cdot \text{ft} \\ \text{while } Loc_{rows} \le L \\ \quad \left| \begin{array}{l} \text{for } i \in 1 .. rows \\ \quad \left| \begin{array}{l} M_i \leftarrow M_{point}\left(Axles_i, Loc_i, L, x\right) \\ Loc_i \leftarrow Loc_i + 0.01\text{ft} \end{array} \right. \\ Moment \leftarrow \max\left(\sum M, Moment\right) \end{array} \right. \\ Loc \leftarrow Locations \\ x \leftarrow L - x \\ \text{while } Loc_{rows} \le L \\ \quad \left| \begin{array}{l} \text{for } i \in 1 .. rows \\ \quad M_i \leftarrow M_{point}\left(Axles_i, Loc_i, L, x\right) \end{array} \right. \end{array} \right.$$

$$\text{Loc}_i \leftarrow \text{Loc}_i + 0.01\,\text{ft}$$

$$\text{Moment} \leftarrow \max\left(\sum \text{M}, \text{Moment}\right)$$

Moment

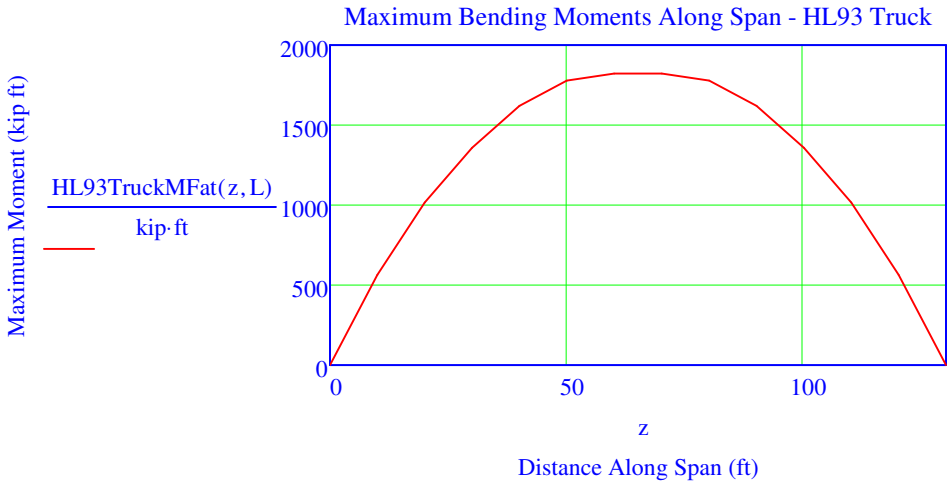

Moments

$$M_{FAT} := \left| \begin{array}{l} \text{for } i \in rs_L .. rs_R \\ \quad \text{Mom}_i \leftarrow \text{HL93TruckMFat}\left(SE_i - P2, L\right) \\ \text{Mom} \end{array} \right.$$

$$M_{FAT_{rows(SE)}} := 0\,\text{kip·ft}$$

$M_{FAT} =$

	1
1	0
2	0
3	63
4	182
5	288
6	461
7	711
8	1235
9	1599
10	1792
11	1795
12	1804
13	1795
14	1792
15	1599
16	...

·kip·ft

Dynamic Load for Fatigue limit state $IM_{FAT} := 15 \cdot \%$ LRFD 3.6.2.1

5.12 Summary of Moments and Shears

Row number of left support $rs_L = 2.0$

Row number of right support $rs_R = 22.0$

Row number of left PS Transfer point $rp = 3.0$

Row number of left critical section for shear $rc = 5.0$

Row number of left harp point $rh = 10.0$

Row number of midspan $rm = 12.0$

Row number of left lifting point $rl_1 = 4.0$

Row number of right lifting point $rl_2 = 20.0$

Row number of left shipping (bunk) point $rb_L = 6.0$

Row number of right shipping (bunk) point $rb_R = 18.0$

Column 1 = Dead Load of Girder between supports after erection
Column 2 = Dead Load of Intermediate Diaphragms
Column 3 = Dead Load of Pad
Column 4 = Dead Load of Slab
Column 5 = Dead Load of Barrier
Column 6 = Dead Load of Future Overlay
Column 7 = Live Load of AASHTO Design Truck
Column 8 = Live Load of AASHTO Design Tandem
Column 9 = Live Load of AASHTO Design Lane
Column 10 = Maximum Live Load Effect including Impact, per lane
Column 11 = Dead Load of Girder between ends after release

$M =$

	1	2	3	4	5	6	7	8	9	10	11
1	0	0	0	0	0	0	0	0	0	0	0
2	0	0	0	0	0	0	0	0	0	0	138
3	70	4	13	42	10	10	68	50	42	133	208
4	203	13	38	121	29	29	197	145	123	385	341
5	322	21	60	191	47	46	312	230	195	609	460
6	518	34	97	308	75	74	501	370	313	979	656
7	805	56	150	479	117	115	775	575	487	1518	943
8	1431	111	267	851	207	205	1363	1020	865	2678	1568
9	1878	149	351	1117	272	269	1764	1335	1136	3482	2016
10	2140	167	400	1274	310	307	1995	1516	1295	3948	2278
11	2146	167	401	1277	311	308	2000	1520	1298	3958	2284
12	2235	186	418	1330	324	320	2060	1575	1352	4092	2373
13	2146	167	401	1277	311	308	2000	1520	1298	3958	2284
14	2140	167	400	1274	310	307	1995	1516	1295	3948	2278
15	1878	149	351	1117	272	269	1764	1335	1136	3482	2016
16	1431	111	267	851	207	205	1363	1020	865	2678	1568
17	805	56	150	479	117	115	775	575	487	1518	943
18	518	34	97	308	75	74	501	370	313	979	656
19	322	21	60	191	47	46	312	230	195	609	460
20	203	13	38	121	29	29	197	145	123	385	341
21	70	4	13	42	10	10	68	50	42	133	208
22	0	0	0	0	0	0	0	0	0	0	138
23	0	0	0	0	0	0	0	0	0	0	0

$\cdot kip \cdot ft$

	1	2	3	4	5	6	7	8	9	10
1	0.00	0.00	0.00	0.00	0.00	0.00	0.00	0.00	0.00	0.00
2	68.78	4.29	12.86	40.93	9.97	9.86	66.83	49.23	41.60	130.48
3	67.69	4.29	12.65	40.28	9.81	9.70	66.26	48.83	40.95	129.07

$V =$

4	65.58	4.29	12.26	39.02	9.50	9.40	65.15	48.07	39.69	126.34
5	63.64	4.29	11.89	37.87	9.22	9.12	64.14	47.36	38.55	123.85
6	60.29	4.29	11.27	35.88	8.74	8.64	62.38	46.14	36.62	119.59
7	55.03	4.29	10.28	32.74	7.97	7.89	59.63	44.23	33.70	113.00
8	41.27	4.29	7.71	24.56	5.98	5.92	52.43	39.23	26.62	96.36
9	27.51	1.43	5.14	16.37	3.99	3.94	45.23	34.23	20.38	80.54
10	14.17	1.43	2.65	8.43	2.05	2.03	38.25	29.38	15.13	66.00
11	13.76	1.43	2.57	8.19	1.99	1.97	38.03	29.23	14.98	65.56
12	0.00	1.43	0.00	0.00	0.00	0.00	30.83	24.23	10.40	51.40
13	-13.76	-1.43	-2.57	-8.19	-1.99	-1.97	-38.03	-29.23	-14.98	-65.55
14	-14.17	-1.43	-2.65	-8.43	-2.05	-2.03	-38.25	-29.38	-15.13	-66.00
15	-27.51	-1.43	-5.14	-16.37	-3.99	-3.94	-45.23	-34.23	-20.38	-80.53
16	-41.27	-4.29	-7.71	-24.56	-5.98	-5.92	-52.43	-39.23	-26.62	-96.35
17	-55.03	-4.29	-10.28	-32.74	-7.97	-7.89	-59.63	-44.23	-33.70	-113.00
18	-60.29	-4.29	-11.27	-35.88	-8.74	-8.64	-62.38	-46.14	-36.62	-119.59
19	-63.64	-4.29	-11.89	-37.87	-9.22	-9.12	-64.13	-47.36	-38.55	-123.85
20	-65.58	-4.29	-12.26	-39.02	-9.50	-9.40	-65.15	-48.07	-39.69	-126.34
21	-67.69	-4.29	-12.65	-40.28	-9.81	-9.70	-66.26	-48.83	-40.95	-129.07
22	-68.78	-4.29	-12.86	-40.93	-9.97	-9.86	-66.83	-49.23	-41.60	-130.48
23	0.00	0.00	0.00	0.00	0.00	0.00	0.00	0.00	0.00	0.00

$\cdot kip$

5.13 Moment Distribution of Live Load

Applicability for use of Live Load Distribution Factors

LRFD 4.6.2.2.1

For typical cross section, use case k

LRFD Table 4.6.2.2.1-1

- Width of deck is constant
- Beams are parallel
- Beams have approximately the same stiffness
- Curvature in plan is less than the limit specified in LRFD 4.6.1.2.4

Multiple presence factors shall not be applied except for exterior girders with special requirement.

LRFD 3.6.1.1.2
LRFD 4.6.2.2.1

Distance from centerline of exterior girder to interior edge of curb/barrier

$d_{bar} := overhang - cw = 2.75\ ft$

Roadway overhang check

$chk_{5,1} := if\left(d_{bar} \le 3ft, "OK", "NG"\right) = "OK"$

Minimum beam count check

$chk_{5,2} := if\left(N_b \ge 4, "OK", "NG"\right) = "OK"$

Distance between the centers of gravity of the basic beam and deck

$e_g := Y_{bs} - Y_{bg} = 41.84 \cdot in$

Longitudinal sitffness parameter

$K_g := \frac{1}{n} \cdot \left(I_g + A_g \cdot e_g^{\ 2}\right) = 3599953 \cdot in^4$

LRFD 4.6.2.2.1-1

Distribution Factor (DF) for Moment on interior girder

LRFD 4.6.2.2.2b

Girder spacing check $chk_{5,3} := \text{if}(3.5\cdot ft \le S \le 16.0\cdot ft, \text{"OK"}, \text{"NG"}) = \text{"OK"}$

Slab thickness check $chk_{5,4} := \text{if}\left(4.5\cdot in \le t_s \le 12.0\cdot in, \text{"OK"}, \text{"NG"}\right) = \text{"OK"}$

Beam span check $chk_{5,5} := \text{if}(20\cdot ft \le L \le 240\cdot ft, \text{"OK"}, \text{"NG"}) = \text{"OK"}$

Longitudinal sitffness parameter check $chk_{5,6} := \text{if}\left(10^4 in^4 \le K_g \le 7\cdot 10^6 in^4, \text{"OK"}, \text{"NG"}\right) = \text{"OK"}$

DF for interior girder

$$DF_i := \begin{cases} 0.075 + \left(\frac{S}{9.5\cdot ft}\right)^{0.6}\cdot\left(\frac{S}{L}\right)^{0.2}\cdot\left(\frac{K_g}{L\cdot t_s^3}\right)^{0.1} & \text{if } N_L > 1 \quad = 0.604 \\ 0.06 + \left(\frac{S}{14\cdot ft}\right)^{0.4}\cdot\left(\frac{S}{L}\right)^{0.3}\cdot\left(\frac{K_g}{L\cdot t_s^3}\right)^{0.1} & \text{if } N_L = 1 \end{cases}$$

Distribution Factor (DF) for Moment on exterior girder

For exterior girder design with slab cantilever length equal or less than one-half of the adjacent interior girder spacing, use the live load distribution factor for interior girder. The slab cantilever length is defined as the distance from the centerline of the exterior girder to the edge of the slab. BDM 3.9.4.A

For exterior girder design with slab cantilever length exceeding one-half of the adjacent interior girder spacing, use the lever rule with the multiple presence factor of 1.0 for single lane to determine the live load distribution. The live load used to design the exterior girder shall not be less than the live load used for the adjacent interior girder.

Minimum distance to curb from LL wheel $curb_{min.sp} := 2ft$ LRFD 3.6.1.3.1

Lever rule distribution

$$DF_{lever} := \begin{array}{l} x \leftarrow S + d_{bar} - curb_{min.sp} \\ Numerator \leftarrow 0ft \\ UseAxleWidth \leftarrow 1 \\ \text{while } x > 0ft \\ \quad Numerator \leftarrow Numerator + x \\ \quad \text{if } UseAxleWidth \\ \quad\quad x \leftarrow x - axlewidth \\ \quad\quad UseAxleWidth \leftarrow 0 \\ \quad \text{otherwise} \\ \quad\quad x \leftarrow x - (12\cdot ft - axlewidth) \\ \quad\quad UseAxleWidth \leftarrow 1 \\ Numerator \end{array} \quad = 0.654$$

DF for exterior girder

$$DF_e := \begin{cases} DF_i & \text{if } overhang \le 0.5\cdot S \quad = 0.654 \\ \max\left(DF_{lever}, DF_i\right) & \text{otherwise} \end{cases}$$

Reduction in Moment DF for Skewed Bridges (LRFD 4.6.2.2.2e, case k)

Note: Applied when the difference between skew angles of two adjacent lines of support <= 10 deg. LRFD 4.6.2.2.2e

Check on skew angle $chk_{5,7} := if\left(30\cdot deg \le \theta_{sk} \le 60\cdot deg, "OK", "NG"\right) = "OK"$

Check on girder spacing $chk_{5,8} := if\left(3.5\cdot ft \le S \le 16.0\cdot ft, "OK", "NG"\right) = "OK"$

Check on girder span $chk_{5,9} := if\left(20\cdot ft \le L \le 240\cdot ft, "OK", "NG"\right) = "OK"$

Check on girder count $chk_{5,10} := if\left(N_b \ge 4, "OK", "NG"\right) = "OK"$

Parameters for skew equation

$$c_1 := \begin{cases} 0.0 & \text{if } \theta_{sk} < 30\cdot deg \\ 0.25\cdot\left(\frac{K_g}{L\cdot t_s^{\,3}}\right)^{0.25}\cdot\left(\frac{S}{L}\right)^{0.5} & \text{otherwise} \end{cases} = 0.090$$

Reduction Factor for skew $SK := 1 - c_1\cdot\left(\tan\left(\min\left(\theta_{sk}, 60deg\right)\right)\right)^{1.5} = 0.961$

Reduced DF for moment

$$DF := \begin{cases} SK\cdot DF_i & \text{if girder} = "interior" \\ SK\cdot DF_e & \text{if girder} = "exterior" \end{cases} = 0.580$$

Distribution Factor for Fatigue Load

LRFD 3.6.1.4.3b
LRFD 3.6.1.1.2

DF for interior girder (one lane loaded)

$$DF_{iFAT} := \frac{0.06 + \left(\frac{S}{14\cdot ft}\right)^{0.4}\cdot\left(\frac{S}{L}\right)^{0.3}\cdot\left(\frac{K_g}{L\cdot t_s^{\,3}}\right)^{0.1}}{1.2} = 0.352$$

DF for exterior girder

$$DF_{eFAT} := \begin{cases} DF_{iFAT} & \text{if overhang} \le 0.5\cdot S \\ \max\left(DF_{lever}, DF_{iFAT}\right) & \text{otherwise} \end{cases} = 0.654$$

Reduced DF for moment - Fatigue Loading

$$DF_{FAT} := \begin{cases} SK\cdot DF_{iFAT} & \text{if girder} = "interior" \\ SK\cdot DF_{eFAT} & \text{if girder} = "exterior" \end{cases} = 0.338$$

5.14 Shear Distribution of Live Load

Distribution Factor (DF) Method for Shear on interior girder

LRFD 4.6.2.2.3a

Range of applicability (LRFD Table 4.6.2.2.3a-1), case k checks are the same as those for moment so checks above are sufficient.

Shear LL distribution factor - interior girder $DF_{vi} := \max\left[0.36 + \frac{S}{25\cdot ft}, 0.2 + \frac{S}{12\cdot ft} - \left(\frac{S}{35\cdot ft}\right)^{2.0}\right] = 0.707$

Distribution Factor (DF) Method for Shear on exterior girder

BDM 3.9.4.A

For exterior girder design with slab cantilever length equal or less than one-half of the adjacent interior girder spacing, use the live load distribution factor for interior girder. The slab cantilever length is defined as the distance from the centerline of the exterior girder to the edge of the slab.

For exterior girder design with slab cantilever length exceeding one-half of the adjacent interior girder spacing, use the lever rule with the multiple presence factor of 1.0 for single lane to determine the live load distribution. The live load used to design the exterior girder shall not be less than the live load used for the adjacent interior girder.

DF for exterior girder

$$DF_{ve} := \begin{cases} DF_{vi} & \text{if } overhang \le 0.5 \cdot S \\ \max\left(DF_{lever}, DF_{vi}\right) & \text{otherwise} \end{cases} = 0.707$$

Correction Factor for Shear DF for Skewed Bridges

LRFD 4.6.2.2.3c

Check on skew angle - other checks for range of applicability are same as for moment with skew

$$chk_{5,11} := \text{if}\left(0 \cdot deg \le \theta_{sk} \le 60 \cdot deg, \text{"OK"}, \text{"NG"}\right) = \text{"OK"}$$

Skew Correction Factor - Shear

$$SK_v := 1.0 + 0.20 \cdot \left(\frac{L \cdot t_s^{\,3}}{K_g}\right)^{0.3} \cdot \tan\left(\theta_{sk}\right) = 1.065$$

Distribution Factor for Shear

$$DF_v := \begin{cases} SK_v \cdot DF_{vi} & \text{if girder} = \text{"interior"} \\ SK_v \cdot DF_{ve} & \text{if girder} = \text{"exterior"} \end{cases} = 0.753$$

6. Computation of Stresses for Dead and Live Loads

Home

6.1 Summary of Stresses

Row number of left support $rs_L = 2.0$

Row number of right support $rs_R = 22.0$

Row number of left PS Transfer point $rp = 3.0$

Row number of left critical section for shear $rc = 5.0$

Row number of left harp point $rh = 10.0$

Row number of midspan $rm = 12.0$

Row number of left lifting point $rl_1 = 4.0$

Row number of right lifting point $rl_2 = 20.0$

Row number of left shipping (bunk) point $rb_L = 6.0$

Row number of right shipping (bunk) point $rb_R = 18.0$

Column 1 = Dead Load of Girder between supports after erection
Column 2 = Dead Load of Intermediate Diaphragms
Column 3 = Dead Load of Pad
Column 4 = Dead Load of Slab
Column 5 = Dead Load of Barrier
Column 6 = Dead Load of Future Overlay
Column 7 = Live Load of AASHTO Design Truck
Column 8 = Live Load of AASHTO Design Tandem
Column 9 = Live Load of AASHTO Design Lane
Column 10 = Maximum Live Load Effect including Impact, per girder
Column 11 = Dead Load of Girder between ends after release

	Noncomposite	Composite
S - top of slab		$S_{ts} = 53919 \cdot in^3$
S - top of girder	$S_{tg} = 19154 \cdot in^3$	$S_t = 44450 \cdot in^3$
S - bottom of girder	$S_{bg} = 20593 \cdot in^3$	$S_b = 25069 \cdot in^3$

Columns 1-4 and 11 act upon the noncomposite section
Columns 5-6 act upon the composite section
Columns 7-10 act upon the composite section and are multiplied by the distribution factor

Negative stress indicates compression.

Stress at the top of the girder: Stress at the bottom of the girder: Stress at the top of the CIP Slab:

$ST :=$ for $j \in 1..4$
  for $i \in 1..\text{rows}(SE)$
    $\text{Stress}_{i,j} \leftarrow -\frac{M_{i,j}}{S_{tg}}$
for $j \in 5..6$
  for $i \in 1..\text{rows}(SE)$
    $\text{Stress}_{i,j} \leftarrow -\frac{M_{i,j}}{S_{t}}$
for $j \in 7..10$
  for $i \in 1..\text{rows}(SE)$
    $\text{Stress}_{i,j} \leftarrow -\frac{M_{i,j} \cdot DF}{S_{t}}$
for $i \in 1..\text{rows}(SE)$
  $\text{Stress}_{i,11} \leftarrow -\frac{M_{i,11}}{S_{tg}}$
Stress

$SB :=$ for $j \in 1..4$
  for $i \in 1..\text{rows}(SE)$
    $\text{Stress}_{i,j} \leftarrow \frac{M_{i,j}}{S_{bg}}$
for $j \in 5..6$
  for $i \in 1..\text{rows}(SE)$
    $\text{Stress}_{i,j} \leftarrow \frac{M_{i,j}}{S_{b}}$
for $j \in 7..10$
  for $i \in 1..\text{rows}(SE)$
    $\text{Stress}_{i,j} \leftarrow \frac{M_{i,j} \cdot DF}{S_{b}}$
for $i \in 1..\text{rows}(SE)$
  $\text{Stress}_{i,11} \leftarrow \frac{M_{i,11}}{S_{bg}}$
Stress

$SS :=$ for $j \in 1..4$
  for $i \in 1..\text{rows}(SE)$
    $\text{Stress}_{i,j} \leftarrow 0\text{ksi}$
for $j \in 5..6$
  for $i \in 1..\text{rows}(SE)$
    $\text{Stress}_{i,j} \leftarrow -\frac{M_{i,j}}{S_{ts}}$
for $j \in 7..10$
  for $i \in 1..\text{rows}(SE)$
    $\text{Stress}_{i,j} \leftarrow -\frac{M_{i,j} \cdot DF}{S_{ts}}$
for $i \in 1..\text{rows}(SE)$
  $\text{Stress}_{i,11} \leftarrow 0\text{ksi}$
Stress

$ST =$

	1	2	3	4	5	6	7	8	9	10	11
1	0.00	0.00	0.00	0.00	0.00	0.00	0.00	0.00	0.00	0.00	0.00
2	0.00	0.00	0.00	0.00	0.00	0.00	0.00	0.00	0.00	0.00	-0.09
3	-0.04	-0.00	-0.01	-0.03	-0.00	-0.00	-0.01	-0.01	-0.01	-0.02	-0.13
4	-0.13	-0.01	-0.02	-0.08	-0.01	-0.01	-0.03	-0.02	-0.02	-0.06	-0.21
5	-0.20	-0.01	-0.04	-0.12	-0.01	-0.01	-0.05	-0.04	-0.03	-0.10	-0.29
6	-0.32	-0.02	-0.06	-0.19	-0.02	-0.02	-0.08	-0.06	-0.05	-0.15	-0.41
7	-0.50	-0.03	-0.09	-0.30	-0.03	-0.03	-0.12	-0.09	-0.08	-0.24	-0.59
8	-0.90	-0.07	-0.17	-0.53	-0.06	-0.06	-0.21	-0.16	-0.14	-0.42	-0.98
9	-1.18	-0.09	-0.22	-0.70	-0.07	-0.07	-0.28	-0.21	-0.18	-0.55	-1.26
10	-1.34	-0.10	-0.25	-0.80	-0.08	-0.08	-0.31	-0.24	-0.20	-0.62	-1.43
11	-1.34	-0.10	-0.25	-0.80	-0.08	-0.08	-0.31	-0.24	-0.20	-0.62	-1.43
12	-1.40	-0.12	-0.26	-0.83	-0.09	-0.09	-0.32	-0.25	-0.21	-0.64	-1.49
13	-1.34	-0.10	-0.25	-0.80	-0.08	-0.08	-0.31	-0.24	-0.20	-0.62	-1.43
14	-1.34	-0.10	-0.25	-0.80	-0.08	-0.08	-0.31	-0.24	-0.20	-0.62	-1.43
15	-1.18	-0.09	-0.22	-0.70	-0.07	-0.07	-0.28	-0.21	-0.18	-0.55	-1.26
16	-0.90	-0.07	-0.17	-0.53	-0.06	-0.06	-0.21	-0.16	-0.14	-0.42	-0.98
17	-0.50	-0.03	-0.09	-0.30	-0.03	-0.03	-0.12	-0.09	-0.08	-0.24	-0.59
18	-0.32	-0.02	-0.06	-0.19	-0.02	-0.02	-0.08	-0.06	-0.05	-0.15	-0.41
19	-0.20	-0.01	-0.04	-0.12	-0.01	-0.01	-0.05	-0.04	-0.03	-0.10	-0.29
20	-0.13	-0.01	-0.02	-0.08	-0.01	-0.01	-0.03	-0.02	-0.02	-0.06	-0.21
21	-0.04	-0.00	-0.01	-0.03	-0.00	-0.00	-0.01	-0.01	-0.01	-0.02	-0.13

$\cdot ksi$

22	0.00	0.00	0.00	0.00	0.00	0.00	0.00	0.00	0.00	0.00	-0.09
23	0.00	0.00	0.00	0.00	0.00	0.00	0.00	0.00	0.00	0.00	0.00

SB =

	1	2	3	4	5	6	7	8	9	10	11
1	0.00	0.00	0.00	0.00	0.00	0.00	0.00	0.00	0.00	0.00	0.00
2	0.00	0.00	0.00	0.00	0.00	0.00	0.00	0.00	0.00	0.00	0.08
3	0.04	0.00	0.01	0.02	0.00	0.00	0.02	0.01	0.01	0.04	0.12
4	0.12	0.01	0.02	0.07	0.01	0.01	0.05	0.04	0.03	0.11	0.20
5	0.19	0.01	0.04	0.11	0.02	0.02	0.09	0.06	0.05	0.17	0.27
6	0.30	0.02	0.06	0.18	0.04	0.04	0.14	0.10	0.09	0.27	0.38
7	0.47	0.03	0.09	0.28	0.06	0.06	0.22	0.16	0.14	0.42	0.55
8	0.83	0.06	0.16	0.50	0.10	0.10	0.38	0.28	0.24	0.74	0.91
9	1.09	0.09	0.20	0.65	0.13	0.13	0.49	0.37	0.32	0.97	1.17
10	1.25	0.10	0.23	0.74	0.15	0.15	0.55	0.42	0.36	1.10	1.33
11	1.25	0.10	0.23	0.74	0.15	0.15	0.56	0.42	0.36	1.10	1.33
12	1.30	0.11	0.24	0.78	0.16	0.15	0.57	0.44	0.38	1.14	1.38
13	1.25	0.10	0.23	0.74	0.15	0.15	0.56	0.42	0.36	1.10	1.33
14	1.25	0.10	0.23	0.74	0.15	0.15	0.55	0.42	0.36	1.10	1.33
15	1.09	0.09	0.20	0.65	0.13	0.13	0.49	0.37	0.32	0.97	1.17
16	0.83	0.06	0.16	0.50	0.10	0.10	0.38	0.28	0.24	0.74	0.91
17	0.47	0.03	0.09	0.28	0.06	0.06	0.22	0.16	0.14	0.42	0.55
18	0.30	0.02	0.06	0.18	0.04	0.04	0.14	0.10	0.09	0.27	0.38
19	0.19	0.01	0.04	0.11	0.02	0.02	0.09	0.06	0.05	0.17	0.27
20	0.12	0.01	0.02	0.07	0.01	0.01	0.05	0.04	0.03	0.11	0.20
21	0.04	0.00	0.01	0.02	0.00	0.00	0.02	0.01	0.01	0.04	0.12
22	0.00	0.00	0.00	0.00	0.00	0.00	0.00	0.00	0.00	0.00	0.08
23	0.00	0.00	0.00	0.00	0.00	0.00	0.00	0.00	0.00	0.00	0.00

·ksi

SS =

	1	2	3	4	5	6	7	8	9	10	11
1	0.00	0.00	0.00	0.00	0.00	0.00	0.00	0.00	0.00	0.00	0.00
2	0.00	0.00	0.00	0.00	0.00	0.00	0.00	0.00	0.00	0.00	0.00
3	0.00	0.00	0.00	0.00	-0.00	-0.00	-0.01	-0.01	-0.01	-0.02	0.00
4	0.00	0.00	0.00	0.00	-0.01	-0.01	-0.03	-0.02	-0.02	-0.05	0.00
5	0.00	0.00	0.00	0.00	-0.01	-0.01	-0.04	-0.03	-0.03	-0.08	0.00
6	0.00	0.00	0.00	0.00	-0.02	-0.02	-0.06	-0.05	-0.04	-0.13	0.00
7	0.00	0.00	0.00	0.00	-0.03	-0.03	-0.10	-0.07	-0.06	-0.20	0.00
8	0.00	0.00	0.00	0.00	-0.05	-0.05	-0.18	-0.13	-0.11	-0.35	0.00
9	0.00	0.00	0.00	0.00	-0.06	-0.06	-0.23	-0.17	-0.15	-0.45	0.00
10	0.00	0.00	0.00	0.00	-0.07	-0.07	-0.26	-0.20	-0.17	-0.51	0.00
11	0.00	0.00	0.00	0.00	-0.07	-0.07	-0.26	-0.20	-0.17	-0.51	0.00
12	0.00	0.00	0.00	0.00	-0.07	-0.07	-0.27	-0.20	-0.17	-0.53	0.00

·ksi

13	0.00	0.00	0.00	0.00	-0.07	-0.07	-0.26	-0.20	-0.17	-0.51	0.00
14	0.00	0.00	0.00	0.00	-0.07	-0.07	-0.26	-0.20	-0.17	-0.51	0.00
15	0.00	0.00	0.00	0.00	-0.06	-0.06	-0.23	-0.17	-0.15	-0.45	0.00
16	0.00	0.00	0.00	0.00	-0.05	-0.05	-0.18	-0.13	-0.11	-0.35	0.00
17	0.00	0.00	0.00	0.00	-0.03	-0.03	-0.10	-0.07	-0.06	-0.20	0.00
18	0.00	0.00	0.00	0.00	-0.02	-0.02	-0.06	-0.05	-0.04	-0.13	0.00
19	0.00	0.00	0.00	0.00	-0.01	-0.01	-0.04	-0.03	-0.03	-0.08	0.00
20	0.00	0.00	0.00	0.00	-0.01	-0.01	-0.03	-0.02	-0.02	-0.05	0.00
21	0.00	0.00	0.00	0.00	-0.00	-0.00	-0.01	-0.01	-0.01	-0.02	0.00
22	0.00	0.00	0.00	0.00	0.00	0.00	0.00	0.00	0.00	0.00	0.00
23	0.00	0.00	0.00	0.00	0.00	0.00	0.00	0.00	0.00	0.00	0.00

7. Prestressing Forces and Stresses

Home

7.1 Stress Limits for Prestressing Strands

Service limit state after all losses	$f_{pe.lim} := 0.80 \cdot f_{py} = 194.4 \cdot ksi$	LRFD Table 5.9.3-1
Stress limit immediately prior to transfer (after relaxation losses prior to transfer)	$f_{pbt.lim} := 0.75 \cdot f_{pu} = 202.5 \cdot ksi$	
Initial stress in PS at jacking. WSDOT practice is to set the jacking force equal to the AASHTO limit immediately prior to transfer.	$f_{pj} := f_{pbt.lim} = 202.5 \cdot ksi$	

7.2 Allowable Concrete Stresses at Service Limit State

Compressive Stress Limits in PS Concrete After PS Losses

Effective Prestress and Permanent Loads - Transfer and Lifting	$f_{c.TL.lim} := -0.65 \cdot f'_{ci} = -4.875 \cdot ksi$	LRFD 5.9.4.2.1 LRFD 5.5.3.1 BDM 5.2.3.B
Effective Prestress and Permanent Loads - Shipping and Erection	$f_{c.SH.lim} := -0.65 \cdot f'_{c} = -5.525 \cdot ksi$	
Effective Prestress and Permanent Loads - Final Stresses	$f_{c.PP.lim} := -0.45 \cdot f'_{c} = -3.825 \cdot ksi$	
Effective Prestress, Permanent Loads and Transient Loads - Final Stresses	$f_{c.PPT.lim} := -0.60 \cdot f'_{c} = -5.100 \cdot ksi$	
Fatigue 1 LL plus 1/2 (Effective Prestress and Permanent Loads)	$f_{c.FA.lim} := -0.40 \cdot f'_{c} = -3.400 \cdot ksi$	

Tensile Stress Limits in PS Concrete

Notes:
1. For the service load combinations which involves traffic loading, tension stress in members with bonded prestressing strands should be investigated using Service III load combination.
2. Tension in precompressed tensile zone assuming uncracked section

Stress at transfer and lifting (bonded reinf, other than precompressed tensile zone)	$f_{t.TL.lim} := 0.19 \cdot \sqrt{f'_{ci} \div ksi} \cdot ksi = 0.520 \cdot ksi$	BDM 5.2.3.B
Stress during shipping - plumb girder with impact (bonded reinf, other than precompressed tensile zone)	$f_{t.SP.lim} := 0.19 \cdot \sqrt{f'_{c} \div ksi} \cdot ksi = 0.554 \cdot ksi$	BDM 5.2.3.B
Stress during shipping - inclined girder without impact (bonded reinf, other than precompressed tensile zone)	$f_{t.SI.lim} := 0.24 \cdot \sqrt{f'_{c} \div ksi} \cdot ksi = 0.700 \cdot ksi$	BDM 5.2.3.B
Limit in precompressed tensile zone	$f_{t.PCT.lim} := 0ksi$	BDM 5.2.3.B

7.3 Jacking Forces

Jacking force for straight strands	$P_{js} := f_{pj} \cdot N_s \cdot A_p = 1142.5 \cdot kip$	
Jacking force for harped strands	$P_{jh} := f_{pj} \cdot N_h \cdot A_p = 527.3 \cdot kip$	

Jacking force for temporary strands

$$P_{jt} := f_{pj} \cdot N_t \cdot A_p = 263.7 \cdot kip$$

Total jacking force

$$P_{jack} := P_{jh} + P_{js} + P_{jt} = 1933.5 \cdot kip$$

7.4 C.G. of Prestress

Final number of permanent prestress strands

$$N_p := N_s + N_h = 38$$

Total area of permanent prestress strands

$$A_{ps} := A_p \cdot N_p = 8.246 \cdot in^2$$

Area of temporary strands

$$A_{temp} := A_p \cdot N_t = 1.302 \cdot in^2$$

Area of final plus temporary strands

$$A_{pstemp} := A_p \cdot (N_t + N_p) = 9.548 \cdot in^2$$

c.g. to straight strands from bottom of girder, E (check specific girder pattern in BDM girder details - WF girder shown)

$$E := \begin{cases} 4 \cdot in & \text{if } N_s \le 2 \\ \dfrac{2 \cdot 4in + (N_s - 2) \cdot 2in}{N_s} & \text{if } 3 \le N_s \le 6 \\ \dfrac{4 \cdot 2in + (N_s - 4) \cdot 4in}{N_s} & \text{if } 7 \le N_s \le 8 \\ \dfrac{4 \cdot 4in + (N_s - 4) \cdot 2in}{N_s} & \text{if } 9 \le N_s \le 20 \\ \dfrac{16 \cdot 2in + (N_s - 16) \cdot 4in}{N_s} & \text{if } 21 \le N_s \le 32 \\ \dfrac{16 \cdot 2in + 16 \cdot 4in + (N_s - 32) \cdot 6in}{N_s} & \text{if } 33 \le N_s \le 42 \\ \dfrac{16 \cdot 2in + 16 \cdot 4in + 10 \cdot 6in + (N_s - 42) \cdot 8in}{N_s} & \text{if } 43 \le N_s \le 46 \\ \text{"error"} & \text{otherwise} \end{cases}$$

$$E = 2.769 \cdot in$$

c.g. of straight strands to c.g. of girder

$$e_s := Y_{bg} - E = 32.891 \cdot in$$

c.g. of temporary strands to c.g. of girder

$$e_{temp} := 2 \cdot in - Y_{tg} = -36.340 \cdot in$$

Eccentricity for harped strand at Midspan

c.g. to harped strands from bottom of girder, F_{CL}, at midspan

$$F_{CL} := 4in$$

Minimum F_{CL} per construction constraints

$$F_{CL.lim} := \begin{cases} 4in & \text{if } 1 \le N_h \le 12 \\ \dfrac{12 \cdot 4in + (N_h - 12) \cdot 6in}{N_h} & \text{if } 13 \le N_h \le 24 \\ \dfrac{12 \cdot 4in + 12 \cdot 6in + (N_h - 24) \cdot 8in}{N_h} & \text{if } 25 \le N_h \le 36 \\ \text{"error"} & \text{otherwise} \end{cases}$$

$F_{CL.lim} = 4.000 \cdot in$ BDM 5.1.3.C.2

Check if F_{CL} is too close to bottom of girder

$chk_{7,1} := \text{if}(F_{CL} \ge F_{CL.lim}, \text{"OK"}, \text{"NG"}) = \text{"OK"}$

Eccentricity for harped strand at end of girder

Distance from the top of girder to the c.g. of the harped strands at the end of girder

$F_o := 9in$

Limit to how close F_o may be to top of girder per strand pattern shown in the standard plans

$F_{o.lim} :=$ increment ← 1 $= 9.000 \cdot in$
e ← 2in
for $i \in 1..N_h$
  if increment
    increment ← 0
    e ← e + 2in
  increment ← 1 otherwise
  Product ← Product + e
return $\dfrac{Product}{N_h}$

Check if F_o is too close to top of girder

$chk_{7,2} := \text{if}(F_o \ge F_{o.lim}, \text{"OK"}, \text{"NG"}) = \text{"OK"}$

Strand Eccentricity Table

Harped strand slope for c.g. of strands

$$slope_h := \frac{d_g - F_o - F_{CL}}{x_h} = 0.094877$$

Maximum slope on individual strand

$$maxslope_h := \frac{d_g - F_o - F_{CL} + (F_{o.lim} - 4in)}{x_h} = 0.1027$$

Limit for maximum slope on individual strand

$$slope_{lim} := \begin{cases} \dfrac{1}{6} & \text{if } d_b = 0.5in \\ \dfrac{1}{8} & \text{if } d_b = 0.6in \\ \text{"error"} & \text{otherwise} \end{cases} = 0.1250$$ BDM 5.1.3.C.2

Check slope of harped strands

$chk_{7,3} := \text{if}(maxslope_h \le slope_{lim}, \text{"OK"}, \text{"NG"}) = \text{"OK"}$

Holddown force at jacking (for shop drawing check)

$$P_{hd} := P_{jh} \cdot \sin\left(\operatorname{atan}\left(slope_h\right)\right) = 49.8 \cdot kip$$

Eccentricity of harped, total permanent, and total permanent + temporary strands at each girder section. Measured from girder neutral axis (positive toward bottom of girder)

$$EC := \left| \begin{array}{l} \text{for } i \in 1 .. rows(SE) \\ \quad EC_{i,1} \leftarrow Y_{bg} - \left[F_{CL} + slope_h \cdot \left(x_h - SE_i\right)\right] \text{ if } SE_i < x_h \\ \quad EC_{i,1} \leftarrow Y_{bg} - F_{CL} \text{ if } x_h \le SE_i \le GL - x_h \\ \quad EC_{i,1} \leftarrow Y_{bg} - \left[F_{CL} + slope_h \cdot \left(SE_i + x_h - GL\right)\right] \text{ if } SE_i > GL - x_h \\ \quad EC_{i,2} \leftarrow \dfrac{e_s \cdot N_s + EC_{i,1} \cdot N_h}{N_p} \\ \quad EC_{i,3} \leftarrow \dfrac{EC_{i,2} \cdot N_p + e_{temp} \cdot N_t}{N_p + N_t} \\ EC \end{array} \right.$$

Column 1 - Harped strand eccentricity to girder neutral axis
Column 2 - Combined Straight and Harped Strands eccentricity
Column 3 - Combined Straight, Harped and Temporary Strands eccentricity

$EC =$ ·in

	1	2	3
1	-29.340	13.239	6.478
2	-27.094	13.948	7.091
3	-25.924	14.318	7.410
4	-23.647	15.037	8.031
5	-21.561	15.696	8.600
6	-17.955	16.834	9.583
7	-12.293	18.622	11.127
8	2.508	23.296	15.164
9	17.309	27.970	19.201
10	31.660	32.502	23.115
11	31.660	32.502	23.115
12	31.660	32.502	23.115
13	31.660	32.502	23.115
14	31.660	32.502	23.115
15	17.309	27.970	19.201
16	2.508	23.296	...

7.5 Loss of Prestress

LRFD 5.9.5

Stress in strands before prestress transfer

Time at tansfer

$$t_o := 1day$$

Prestress Relaxation at transfer

$$\Delta f_{pR0} := -\frac{\log\left(\dfrac{24.0 \cdot t_o}{day}\right)}{40} \cdot \left(\frac{f_{pj}}{f_{py}} - 0.55\right) \cdot f_{pj}$$

BDM 5.1.4.D

$$\Delta f_{pR0} = -1.980 \cdot ksi$$

Prestress immediately before transfer $f_{pbt} := f_{pj} + \Delta f_{pR0} = 200.520 \cdot ksi$

Initial Loss due to Elastic Shortening at Midspan

Estimate of elastic shortening in permanent strands immediately after transfer $x_1 := -\left(f_{pbt} - 0.7 \cdot f_{pu}\right) = -11.5 \cdot ksi$ BDM 5.1.4.A.1

Estimate of elastic shortening in temporary strands immediately after transfer $x_2 := -\left(f_{pbt} - 0.7 \cdot f_{pu}\right) = -11.5 \cdot ksi$ BDM 5.1.4.A.1

Estimate of total prestressing force P $P := A_{ps} \cdot \left(f_{pbt} + x_1\right) + A_{temp} \cdot \left(f_{pbt} + x_2\right) = 1804.6 \cdot kip$

Solve Block for prestress after elastic shortening Given LRFD 5.9.5.2.3a

Total prestressing force P $P = A_{ps} \cdot \left(f_{pbt} + x_1\right) + A_{temp} \cdot \left(f_{pbt} + x_2\right)$

Elastic shortening in perm. strands immediately after transfer $x_1 = -\left[\frac{E_p}{E_{ci}} \cdot \left(\frac{P}{A_g} + \frac{P \cdot EC_{rm,3} \cdot EC_{rm,2}}{I_g} - \frac{M_{rm,11} \cdot EC_{rm,2}}{I_g}\right)\right]$

Elastic shortening in temp. strands immediately after transfer $x_2 = -\left[\frac{E_p}{E_{ci}} \cdot \left(\frac{P}{A_g} + \frac{P \cdot EC_{rm,3} \cdot e_{temp}}{I_g} - \frac{M_{rm,11} \cdot e_{temp}}{I_g}\right)\right]$

Solve for the 3 unknowns in the 3 equations above $\begin{pmatrix} P_{ps} \\ \Delta f_{pES} \\ \Delta f_{pEST} \end{pmatrix} := \text{Find}\left(P, x_1, x_2\right)$

Stress in prestress strands immediately after transfer $P_{ps} = 1798.2 \cdot kip$

Initial loss in perm. strands due to elastic shortening $\Delta f_{pES} = -13.055 \cdot ksi$

Initial loss in temp. strands due to elastic shortening $\Delta f_{pEST} = -6.716 \cdot ksi$

Elastic Gain due to Diaphragms, Deck and SIDL at Midspan:

BDM 5.1.4.D

Elastic gain due to diaphragms and deck $\Delta f_{pED1} := \frac{E_p}{E_c} \cdot \left[\frac{\left(M_{rm,2} + M_{rm,3} + M_{rm,4}\right) \cdot EC_{rm,2}}{I_g}\right] = 4.986 \cdot ksi$

Elastic gain due to SIDL (including barrier weight but not traffic overlay) $\Delta f_{pED2} := \frac{E_p}{E_c} \cdot \left[\frac{M_{rm,5} \cdot \left(Y_b - Y_{bg} + EC_{rm,2}\right)}{I_c}\right] = 0.702 \cdot ksi$

Approximate Lump Sum Estimate of Time Dependent Losses

The Approximate Estimate of Time-Dependent Losses of AASHTO LRFD 5.9.5.3 may be used for precast BDM 5.1.4.B

prestressed girders with composite decks as long as the conditions set forth in AASHTO are satisfied: LRFD 5.9.5.3

- Normal density concrete
- Concrete is either steam or moist cured
- Prestressing is by low relaxation strands
- Sited in average exposure condition and temperatures

Concrete density check

$$chk_{7,4} := \text{if}\left(0.155\text{kcf} \geq w_{cE} \geq 0.135\text{kcf}, \text{"OK"}, \text{"NG"}\right) = \text{"OK"}$$

Correction factore for ambient air RH

$$\gamma_h := 1.7 - 0.01 \cdot (H \div \%) = 0.950$$

Correction factor for concrete strength at transfer

$$\gamma_{st} := \frac{5}{1 + f'_{ci} \div \text{ksi}} = 0.588$$

Approx lump sum long term PS losses at shipping

$$\Delta f_{pLTH} := -\left(3 \cdot \frac{f_{pbt} \cdot A_{ps}}{\text{ksi} \cdot A_g} \gamma_h \cdot \gamma_{st} + 3 \cdot \gamma_h \cdot \gamma_{st} + 0.6\right) \text{ksi} = -5.278 \cdot \text{ksi}$$

BDM 5.1.4.E.2

Approx lump sum long term PS losses

$$\Delta f_{pLT} := -\left(10.0 \cdot \frac{f_{pbt} \cdot A_{ps}}{\text{ksi} \cdot A_g} \gamma_h \cdot \gamma_{st} + 12.0 \cdot \gamma_h \cdot \gamma_{st} + 2.4\right) \text{ksi} = -19.111 \cdot \text{ksi}$$

LRFD 5.9.5.3

Loss due to Removal of Temporary Strands at Midspan

Force in temporary strands before removal

$$P_{tr} := A_{temp} \cdot \left(f_{pbt} + \Delta f_{pEST} + \Delta f_{pLTH}\right) = 245.5 \cdot \text{kip}$$

Change in stress at c.g. permanent strands after removal of temporary strands

$$f_{ptr} := \frac{P_{tr}}{A_g} + \frac{P_{tr} \cdot e_{temp} \cdot EC_{rm,2}}{I_g} = -0.129 \cdot \text{ksi}$$

Loss in permanent strands due to removal of temporary strands

$$\Delta f_{ptr} := \frac{E_p}{E_c} \cdot f_{ptr} = -0.626 \cdot \text{ksi}$$

Total Prestress Losses - Permanent Strands at Midspan

BDM 5.1.4.D

Total PS loss by lump sum estimate

$$\Delta f_{pT} := \Delta f_{pR0} + \Delta f_{pES} + \Delta f_{ptr} + \Delta f_{pED1} + \Delta f_{pED2} + \Delta f_{pLT}$$

$$\Delta f_{pT} = -29.084 \cdot \text{ksi}$$

Effective Prestress at Midspan

Effective prestress at midspan

$$f_{pe} := f_{pj} + \Delta f_{pT} = 173.416 \cdot \text{ksi}$$

Check effective prestress limit

$$chk_{7,5} := \text{if}\left(f_{pe} \leq f_{pe.lim}, \text{"OK"}, \text{"NG"}\right) = \text{"OK"}$$

LRFD 5.9.3

Effective prestress force at midspan

$$P_e := A_{ps} \cdot f_{pe} = 1430.0 \cdot \text{kip}$$

7.6 Effective Prestress Modifier for Sections within Transfer Length

Multiply effective prestress force by modifier below at each section to account for force in prestressing within the transfer length. The prestressing force may be assumed to vary linearly from 0.0 at the point where bonding commences (free end of strand) to a maximum at the transfer length.

$$TRAN := \left| \begin{array}{l} \text{for } i \in 1 .. \text{rows}(SE) \\ \quad \left| \begin{array}{l} TR_i \leftarrow \dfrac{SE_i}{l_t} \text{ if } SE_i < l_t \\ TR_i \leftarrow 1 \text{ if } l_t \le SE_i \le GL - l_t \\ TR_i \leftarrow \dfrac{GL - SE_i}{l_t} \text{ if } GL - l_t < SE_i \end{array} \right. \\ TR \end{array} \right.$$

$TRAN =$

	1
1	0.000
2	0.658
3	1.000
4	1.000
5	1.000
6	1.000
7	1.000
8	1.000
9	1.000
10	1.000
11	1.000
12	1.000
13	1.000
14	1.000
15	1.000
16	...

8. Stresses at Service and Fatigue Limit States

Home

Negative stress indicates compression.

8.1 Service I for Casting Yard Stage (At Release)

Effective Prestress in Permanent Strands $f_{peP1} := f_{pj} + \Delta f_{pR0} + \Delta f_{pES} = 187.5 \cdot ksi$

Effective Prestress in Temporary Strands $f_{peT1} := f_{pj} + \Delta f_{pR0} + \Delta f_{pEST} = 193.8 \cdot ksi$

Stress in girder due to prestressing:

$PS1 :=$ for $i \in 1 .. rows(SE)$

$P_p \leftarrow f_{peP1} \cdot TRAN_i \cdot A_{ps}$

$P_t \leftarrow f_{peT1} \cdot TRAN_i \cdot A_{temp}$

$PS_{i,1} \leftarrow -\left(\frac{P_p}{A_g} - \frac{P_p \cdot EC_{i,2}}{S_{tg}} + \frac{P_t}{A_g} - \frac{P_t \cdot e_{temp}}{S_{tg}}\right)$

$PS_{i,2} \leftarrow -\left(\frac{P_p}{A_g} + \frac{P_p \cdot EC_{i,2}}{S_{bg}} + \frac{P_t}{A_g} + \frac{P_t \cdot e_{temp}}{S_{bg}}\right)$

PS

$PS1 =$ ·ksi

	Top Stress	Bottom Stress
	1	2
1	0.000	0.000
2	-0.855	-1.676
3	-1.270	-2.577
4	-1.212	-2.631
5	-1.159	-2.680
6	-1.067	-2.766
7	-0.923	-2.900
8	-0.546	-3.251
9	-0.169	-3.601
10	0.197	-3.942
11	0.197	-3.942
12	0.197	-3.942
13	0.197	-3.942
14	0.197	-3.942
15	-0.169	-3.601
16	-0.546	...

Find total Service I stress which includes:

- Prestress
- Girder Dead Load between ends

$STRESS1 :=$ for $i \in 1 .. rows(SE)$

$STR_{i,1} \leftarrow PS1_{i,1} + ST_{i,11}$

$STR_{i,2} \leftarrow PS1_{i,2} + SB_{i,11}$

STR

$STRESS1 =$ ·ksi

	Top Stress	Bottom Stress
	1	2
1	0.000	0.000
2	-0.941	-1.596
3	-1.401	-2.455
4	-1.426	-2.432
5	-1.447	-2.412
6	-1.478	-2.383
7	-1.513	-2.351
8	-1.528	-2.337
9	-1.431	-2.427
10	-1.230	-2.614

11	-1.234	-2.611
12	-1.290	-2.559
13	-1.234	-2.611
14	-1.230	-2.614
15	-1.431	-2.427
16	-1.528	...

Maximum compressive stress allowed: $f_{c.TL.lim} = -4.875 \cdot ksi$

Maximum tensile stress allowed: $f_{t.TL.lim} = 0.520 \cdot ksi$

Check compressive stress $chk_{8,1} := if\left(\min(STRESS1) \geq f_{c.TL.lim}, "OK", "NG"\right) = "OK"$

Check tensile stress (with bonded reinforcement) $chk_{8,2} := if\left(\max(STRESS1) \leq f_{t.TL.lim}, "OK", "NG"\right) = "OK"$

8.2 Service I after Temporary Strand Removal

Effective Prestress in Permanent Strands $f_{peP2} := f_{pj} + \Delta f_{pR0} + \Delta f_{pES} + \Delta f_{pLTH} + \Delta f_{ptr} = 181.6 \cdot ksi$

Stress in girder due to prestressing:

$$PS2 := \left| \begin{array}{l} \text{for } i \in 1 .. rows(SE) \\ \quad P_p \leftarrow f_{peP2} \cdot TRAN_i \cdot A_{ps} \\ \quad PS_{i,1} \leftarrow -\left(\frac{P_p}{A_g} - \frac{P_p \cdot EC_{i,2}}{S_{tg}}\right) \\ \quad PS_{i,2} \leftarrow -\left(\frac{P_p}{A_g} + \frac{P_p \cdot EC_{i,2}}{S_{bg}}\right) \\ PS \end{array} \right.$$

$PS2 =$

	Top Stress	Bottom Stress
	1	2
1	0.000	0.000
2	-0.349	-1.733
3	-0.502	-2.662
4	-0.446	-2.714
5	-0.394	-2.762
6	-0.305	-2.845
7	-0.166	-2.975
8	0.200	-3.315
9	0.565	-3.655
10	0.919	-3.984
11	0.919	-3.984
12	0.919	-3.984
13	0.919	-3.984
14	0.919	-3.984
15	0.565	-3.655
16	0.200	...

$\cdot ksi$

Find total Service I stress which includes:
- Prestress
- Girder Dead Load between supports

	Top Stress	Bottom Stress
	1	2

$$\text{STRESS2} := \left| \begin{array}{l} \text{for } i \in 1..\text{rows}(SE) \\ \quad \left| \begin{array}{l} \text{STR}_{i,1} \leftarrow \text{PS2}_{i,1} + \text{ST}_{i,1} \\ \text{STR}_{i,2} \leftarrow \text{PS2}_{i,2} + \text{SB}_{i,1} \end{array} \right. \\ \text{STR} \end{array} \right.$$

$$\text{STRESS2} = \begin{array}{|c|r|r|} \hline 1 & 0.000 & 0.000 \\ 2 & -0.349 & -1.733 \\ 3 & -0.546 & -2.621 \\ 4 & -0.573 & -2.596 \\ 5 & -0.596 & -2.575 \\ 6 & -0.630 & -2.543 \\ 7 & -0.670 & -2.506 \\ 8 & -0.697 & -2.481 \\ 9 & -0.611 & -2.560 \\ 10 & -0.422 & -2.737 \\ 11 & -0.425 & -2.734 \\ 12 & -0.481 & -2.682 \\ 13 & -0.425 & -2.734 \\ 14 & -0.422 & -2.737 \\ 15 & -0.611 & -2.560 \\ 16 & -0.697 & \ldots \\ \hline \end{array} \cdot \text{ksi}$$

Maximum compressive stress allowed: $f_{c.SH.lim} = -5.525 \cdot \text{ksi}$

Maximum tensile stress allowed: $f_{t.SP.lim} = 0.554 \cdot \text{ksi}$

Check compressive stress $\text{chk}_{8,3} := \text{if}\left(\min(\text{STRESS2}) \geq f_{c.SH.lim}, \text{"OK"}, \text{"NG"}\right) = \text{"OK"}$

Check tensile stress (with bonded reinforcement) $\text{chk}_{8,4} := \text{if}\left(\max(\text{STRESS2}) \leq f_{t.SP.lim}, \text{"OK"}, \text{"NG"}\right) = \text{"OK"}$

8.3 Service I after Deck and Diaphragm Placement

Effective Prestress in Permanent Strands $f_{peP3} := f_{pj} + \Delta f_{pR0} + \Delta f_{pES} + \Delta f_{pLT} + \Delta f_{ptr} + \Delta f_{pED1} = 172.7 \cdot \text{ksi}$

Stress in girder due to prestressing:

$$\text{PS3} := \left| \begin{array}{l} \text{for } i \in 1..\text{rows}(SE) \\ \quad \left| \begin{array}{l} P_p \leftarrow f_{peP3} \cdot \text{TRAN}_i \cdot A_{ps} \\ \text{PS}_{i,1} \leftarrow -\left(\dfrac{P_p}{A_g} - \dfrac{P_p \cdot EC_{i,2}}{S_{tg}}\right) \\ \text{PS}_{i,2} \leftarrow -\left(\dfrac{P_p}{A_g} + \dfrac{P_p \cdot EC_{i,2}}{S_{bg}}\right) \end{array} \right. \\ \text{PS} \end{array} \right.$$

$$\text{PS3} = \begin{array}{|c|r|r|} \hline & \text{Top Stress} & \text{Bottom Stress} \\ & 1 & 2 \\ \hline 1 & 0.000 & 0.000 \\ 2 & -0.332 & -1.649 \\ 3 & -0.478 & -2.532 \\ 4 & -0.424 & -2.582 \\ 5 & -0.375 & -2.628 \\ 6 & -0.290 & -2.706 \\ 7 & -0.158 & -2.830 \\ 8 & 0.190 & -3.153 \\ 9 & 0.538 & -3.477 \\ 10 & 0.875 & -3.790 \\ 11 & 0.875 & -3.790 \\ \hline \end{array} \cdot \text{ksi}$$

12	0.875	-3.790
13	0.875	-3.790
14	0.875	-3.790
15	0.538	-3.477
16	0.190	...

Find total Service I stress which includes:
- Prestress
- Girder Dead Load between supports
- Diaphragm Dead Load
- Slab and Pad Dead Load

$$STRESS3 := \left| \begin{array}{l} \text{for } i \in 1 .. \text{rows}(SE) \\ \quad STR_{i,1} \leftarrow PS3_{i,1} + \sum_{j=1}^{4} ST_{i,j} \\ \quad STR_{i,2} \leftarrow PS3_{i,2} + \sum_{j=1}^{4} SB_{i,j} \\ STR \end{array} \right.$$

$STRESS3 =$ ·ksi

	Top Stress 1	Bottom Stress 2
1	0.000	0.000
2	-0.332	-1.649
3	-0.559	-2.457
4	-0.659	-2.363
5	-0.747	-2.281
6	-0.890	-2.148
7	-1.091	-1.962
8	-1.477	-1.603
9	-1.652	-1.440
10	-1.620	-1.470
11	-1.626	-1.464
12	-1.738	-1.360
13	-1.626	-1.464
14	-1.620	-1.470
15	-1.652	-1.440
16	-1.477	...

Maximum compressive stress allowed: $f_{c.PP.lim} = -3.825 \cdot ksi$

Maximum tensile stress allowed: $f_{t.PCT.lim} = 0.000 \cdot ksi$

Check compressive stress $chk_{8,5} := \text{if}\left(\min(STRESS3) \geq f_{c.PP.lim}, \text{"OK"}, \text{"NG"}\right) = \text{"OK"}$

Check tensile stress (with bonded reinforcement) $chk_{8,6} := \text{if}\left(\max(STRESS3) \leq f_{t.PCT.lim}, \text{"OK"}, \text{"NG"}\right) = \text{"OK"}$

8.4 Service I for Superimposed Dead Load (SIDL) - Bridge Site 2

Effective Prestress in Permanent Strands $f_{peP4} := f_{pj} + \Delta f_{pR0} + \Delta f_{pES} + \Delta f_{pLT} + \Delta f_{ptr} + \Delta f_{pED1} + \Delta f_{pED2} = 173.4 \cdot ksi$

Stress in girder due to prestressing:

	Top Stress 1	Bottom Stress 2

$$PS4 := \left| \begin{array}{l} \text{for } i \in 1..\text{rows}(SE) \\ \quad P_p \leftarrow f_{peP4} \cdot TRAN_i \cdot A_{ps} \\ \quad PS_{i,1} \leftarrow -\left(\frac{P_p}{A_g} - \frac{P_p \cdot EC_{i,2}}{S_{tg}}\right) \\ \quad PS_{i,2} \leftarrow -\left(\frac{P_p}{A_g} + \frac{P_p \cdot EC_{i,2}}{S_{bg}}\right) \\ PS \end{array} \right.$$

$PS4 =$ ·ksi

1	0.000	0.000
2	-0.333	-1.655
3	-0.480	-2.543
4	-0.426	-2.593
5	-0.377	-2.638
6	-0.292	-2.717
7	-0.158	-2.842
8	0.191	-3.166
9	0.540	-3.491
10	0.878	-3.805
11	0.878	-3.805
12	0.878	-3.805
13	0.878	-3.805
14	0.878	-3.805
15	0.540	-3.491
16	0.191	...

Find total Service I stress which includes:

- Prestress
- Girder Dead Load between supports
- Diaphragm Dead Load
- Slab and Pad Dead Load
- Barrier SIDL

$$STRESS4 := \left| \begin{array}{l} \text{for } i \in 1..\text{rows}(SE) \\ \quad STR_{i,1} \leftarrow PS4_{i,1} + \sum_{j=1}^{5} ST_{i,j} \\ \quad STR_{i,2} \leftarrow PS4_{i,2} + \sum_{j=1}^{5} SB_{i,j} \\ \quad STR_{i,3} \leftarrow \sum_{j=1}^{5} SS_{i,j} \\ STR \end{array} \right.$$

$STRESS4 =$ ·ksi

	Top Stress	Bottom Stress	Slab Top Stress
	1	2	3
1	0.000	0.000	0.000
2	-0.333	-1.655	0.000
3	-0.563	-2.462	-0.002
4	-0.669	-2.360	-0.007
5	-0.762	-2.270	-0.010
6	-0.912	-2.124	-0.017
7	-1.123	-1.918	-0.026
8	-1.532	-1.516	-0.046
9	-1.723	-1.324	-0.061
10	-1.700	-1.337	-0.069
11	-1.706	-1.331	-0.069
12	-1.821	-1.221	-0.072
13	-1.706	-1.331	-0.069
14	-1.700	-1.337	-0.069
15	-1.723	-1.324	-0.061
16	-1.532	-1.516	...

Maximum compressive stress allowed - girder: $f_{c.PP.lim} = -3.825 \cdot ksi$

Maximum tensile stress allowed: $f_{t.PCT.lim} = 0.000 \cdot ksi$

Check compressive stress in girder

$$chk_{8,7} := if\left(\min\left(STRESS4^{\langle 1\rangle}, STRESS4^{\langle 2\rangle}\right) \geq f_{c.PP.lim}, "OK", "NG"\right) = "OK"$$

Check tensile stress in girder (with bonded reinforcement)

$$chk_{8,8} := if\left(\max\left(STRESS4^{\langle 1\rangle}, STRESS4^{\langle 2\rangle}\right) \leq f_{t.PCT.lim}, "OK", "NG"\right) = "OK"$$

8.5 Service I for Final with Live Load - Bridge Site 3 - Compressive Stresses

Effective Prestress in Permanent Strands

$$f_{peP5} := f_{pe} = 173.4 \cdot ksi$$

Stress in girder due to prestressing:

$$PS5 := \left| \begin{array}{l} \text{for } i \in 1..rows(SE) \\ \quad P_p \leftarrow f_{peP5} \cdot TRAN_i \cdot A_{ps} \\ \quad PS_{i,1} \leftarrow -\left(\frac{P_p}{A_g} - \frac{P_p \cdot EC_{i,2}}{S_{tg}}\right) \\ \quad PS_{i,2} \leftarrow -\left(\frac{P_p}{A_g} + \frac{P_p \cdot EC_{i,2}}{S_{bg}}\right) \\ PS \end{array} \right.$$

$PS5 =$

	Top Stress 1	Bottom Stress 2
1	0.000	0.000
2	-0.333	-1.655
3	-0.480	-2.543
4	-0.426	-2.593
5	-0.377	-2.638
6	-0.292	-2.717
7	-0.158	-2.842
8	0.191	-3.166
9	0.540	-3.491
10	0.878	-3.805
11	0.878	-3.805
12	0.878	-3.805
13	0.878	-3.805
14	0.878	-3.805
15	0.540	-3.491
16	0.191	...

$\cdot ksi$

Find total Service I stress which includes:

- Prestress
- Girder Dead Load between supports
- Diaphragm Dead Load
- Slab and Pad Dead Load
- Barrier SIDL
- Traffic Overlay
- Live Load

To maximize bottom compressive stress, the Live Load is left off.

	Top Stress 1	Bottom Stress 2	Slab Top Stress 3
1	0.000	0.000	0.000
2	-0.333	-1.655	0.000
3	-0.587	-2.458	-0.022
4	-0.737	-2.346	-0.063
5	-0.869	-2.248	-0.099

$$STRESS5 := \left| \begin{array}{l} \text{for } i \in 1..\text{rows}(SE) \\ \quad STR_{i,1} \leftarrow PS5_{i,1} + \sum_{j=1}^{6} ST_{i,j} + ST_{i,10} \\ \quad STR_{i,2} \leftarrow PS5_{i,2} + \sum_{j=1}^{6} SB_{i,j} \\ \quad STR_{i,3} \leftarrow \sum_{j=1}^{6} SS_{i,j} + SS_{i,10} \\ STR \end{array} \right.$$

$$STRESS5 = \begin{array}{|c|c|c|c|} \hline & & & \\ \hline 6 & -1.085 & -2.088 & -0.160 \\ \hline 7 & -1.392 & -1.862 & -0.248 \\ \hline 8 & -2.007 & -1.418 & -0.438 \\ \hline 9 & -2.341 & -1.195 & -0.570 \\ \hline 10 & -2.401 & -1.190 & -0.647 \\ \hline 11 & -2.410 & -1.183 & -0.649 \\ \hline 12 & -2.549 & -1.067 & -0.672 \\ \hline 13 & -2.410 & -1.183 & -0.649 \\ \hline 14 & -2.401 & -1.190 & -0.647 \\ \hline 15 & -2.341 & -1.195 & -0.570 \\ \hline 16 & -2.007 & -1.418 & ... \\ \hline \end{array} \cdot ksi$$

Maximum compressive stress allowed - girder: $f_{c.PPT.lim} = -5.100 \cdot ksi$

Check compressive stress in girder $chk_{8,9} := \text{if}\left(\min\left(STRESS5^{\langle 1 \rangle}, STRESS5^{\langle 2 \rangle}\right) \geq f_{c.PPT.lim}, \text{"OK"}, \text{"NG"}\right) = \text{"OK"}$

8.6 Fatigue I for Final with Live Load - Bridge Site 3 - Compressive Stresses

Live Load Stresses from the factored Fatigue Load:

$$S_{FATLL} := \left| \begin{array}{l} \text{for } i \in 1..\text{rows}(SE) \\ \quad Stress_{i,1} \leftarrow -\dfrac{\gamma_{LLfat} \cdot M_{FAT_i} \cdot DF_{FAT} \cdot (1 + IM_{FAT})}{S_t} \\ \quad Stress_{i,2} \leftarrow \dfrac{\gamma_{LLfat} \cdot M_{FAT_i} \cdot DF_{FAT} \cdot (1 + IM_{FAT})}{S_b} \\ Stress \end{array} \right.$$

$$S_{FATLL} = \begin{array}{|c|c|c|} \hline & \text{Top Stress} & \text{Bottom Stress} \\ \hline & 1 & 2 \\ \hline 1 & 0.000 & 0.000 \\ \hline 2 & 0.000 & 0.000 \\ \hline 3 & -0.010 & 0.018 \\ \hline 4 & -0.029 & 0.051 \\ \hline 5 & -0.045 & 0.080 \\ \hline 6 & -0.073 & 0.129 \\ \hline 7 & -0.112 & 0.199 \\ \hline 8 & -0.194 & 0.345 \\ \hline 9 & -0.252 & 0.446 \\ \hline 10 & -0.282 & 0.500 \\ \hline 11 & -0.283 & 0.501 \\ \hline 12 & -0.284 & 0.504 \\ \hline 13 & -0.283 & 0.501 \\ \hline 14 & -0.282 & 0.500 \\ \hline 15 & -0.252 & 0.446 \\ \hline 16 & -0.194 & ... \\ \hline \end{array} \cdot ksi$$

Find total Fatigue I stress which includes:

- 1/2 Prestress
- 1/2 Girder Dead Load between supports
- 1/2 Diaphragm Dead Load
- 1/2 Slab and Pad Dead Load
- 1/2 Barrier SIDL
- 1/2 Future Overlay SIDL
- Fatigue Live Load

To maximize bottom compressive stress, the Fatigue Live Load is left off.

$$STRESS6 := \left| \begin{array}{l} \text{for } i \in 1..\text{rows}(SE) \\ \quad STR_{i,1} \leftarrow \dfrac{PS5_{i,1} + \sum_{j=1}^{6} ST_{i,j}}{2} + S_{FATLL_{i,1}} \\ \quad STR_{i,2} \leftarrow \dfrac{PS5_{i,2} + \sum_{j=1}^{6} SB_{i,j}}{2} \\ STR \end{array} \right.$$

$STRESS6 =$ (Top Stress, Bottom Stress) $\cdot ksi$

	1	2
1	0.000	0.000
2	-0.167	-0.828
3	-0.293	-1.229
4	-0.367	-1.173
5	-0.432	-1.124
6	-0.539	-1.044
7	-0.689	-0.931
8	-0.988	-0.709
9	-1.150	-0.598
10	-1.173	-0.595
11	-1.177	-0.592
12	-1.238	-0.534
13	-1.177	-0.592
14	-1.173	-0.595
15	-1.150	-0.598
16	-0.988	...

Maximum compressive stress allowed - girder: $f_{c.FA.lim} = -3.400 \cdot ksi$

Check compressive stress in girder $chk_{8,10} := \text{if}\left(\min(STRESS6) \geq f_{c.FA.lim}, \text{"OK"}, \text{"NG"}\right) = \text{"OK"}$

8.7 Service III for Final with Live Load - Bridge Site 3 - Tensile Stresses

Find total Service III stress which includes:

- Prestress
- Girder Dead Load between supports
- Diaphragm Dead Load
- Slab and Pad Dead Load
- Barrier SIDL
- Traffic Overlay
- Live Load (factored)

$$STRESS7 := \left| \begin{array}{l} \text{for } i \in 1..\text{rows}(SE) \\ \quad STR_{i,1} \leftarrow PS5_{i,1} + \sum_{j=1}^{6} ST_{i,j} + \gamma_{LLserIII} \cdot ST_{i,10} \\ \quad STR_{i,2} \leftarrow PS5_{i,2} + \sum_{j=1}^{6} SB_{i,j} + \gamma_{LLserIII} \cdot SB_{i,10} \\ STR \end{array} \right.$$

$STRESS7 =$ (Top Stress, Bottom Stress) $\cdot ksi$

	1	2
1	0.000	0.000
2	-0.333	-1.655
3	-0.583	-2.428
4	-0.725	-2.260
5	-0.850	-2.112
6	-1.055	-1.870
7	-1.344	-1.525
8	-1.923	-0.823
9	-2.232	-0.421
10	-2.277	-0.313
11	-2.286	-0.304
12	-2.421	-0.158
13	-2.286	-0.304

14	-2.277	-0.313
15	-2.232	-0.421
16	-1.923	...

Maximum tensile stress allowed - girder: $f_{t.PCT.lim} = 0.000 \cdot ksi$

Check tensile stress in girder (with bonded reinforcement) $chk_{8,11} := if\left(\max\left(STRESS7^{\langle 1 \rangle}, STRESS7^{\langle 2 \rangle}\right) \le f_{t.PCT.lim}, "OK", "NG"\right) = "OK$

9. Strength Limit State

Home

9.1 Ultimate Moments

Factored bending moments for Strength 1 Limit State (ultimate):

$$M_u := \left| \begin{array}{l} \text{for } i \in 1 .. \text{rows}(SE) \\ UM_i \leftarrow \eta \cdot \left(\gamma_{DC} \cdot \sum_{j=1}^{5} M_{i,j} + \gamma_{DW} \cdot M_{i,6} + \gamma_{LL} \cdot DF \cdot M_{i,10} \right) \\ UM \end{array} \right.$$

$M_u =$ ·kip·ft

	1
1	0
2	0
3	324
4	941
5	1489
6	2397
7	3723
8	6613
9	8649
10	9834
11	9859
12	10253
13	9859
14	9834
15	8649
16	...

9.2 Flexural Resistance

LRFD 5.7.3

The approximate method using the rectangular stress distribution of AASHTO LRFD 5.7.3 is used below. It is known that this method underestimates the flexural resistance due to factors such as not accounting for higher strength concrete for the girder, not accounting for the top flange of the precast girder, excessive "c" dimensions causing the flexural resistance factor to be reduced, etc. If higher capacity or improved accuracy is needed, it is recommended to use the Nonlinear Strain Compatibility Analysis procedure described in the PCI Journal, Jan-Feb 2005, "Flexural Strength of Reinforced and Prestressed Concrete T-Beams". Areas of mild steel tension and compression reinforcement are conservatively assumed to be zero.

Check for validity of f_{ps} eqn at midspan

$$chk_{9,1} := \text{if}\left(f_{pe} \geq 0.5 \cdot f_{pu}, \text{"OK"}, \text{"NG"}\right) = \text{"OK"}$$

Factor for determination of c

$$k := 2 \cdot \left(1.04 - \frac{f_{py}}{f_{pu}}\right) = 0.28$$

LRFD 5.7.3.1.1

Depth of compression flange

$$h_f := t_s = 7.0 \cdot in$$

Find stress in prestressing steel at nominal flexural resistance

Strands at all sections are assumed to be fully developed.

Distance from extreme compression fiber to the centroid of the prestressing tendons

$$d_{p_i} := h_f + Y_{tg} + EC_{i,2}$$

Distance between neutral axis and compression face for flanged (T) section behavior

$$c_{fI_i} := \frac{A_{ps}\cdot f_{pu} - 0.85\cdot f'_{cs}\cdot(b_e - b_w)\cdot h_f}{0.85\cdot f'_{cs}\cdot\beta_1\cdot b_w + k\cdot A_{ps}\cdot\frac{f_{pu}}{d_{p_i}}}$$

LRFD 5.7.3.1.1

Distance between neutral axis and compression face for rectangular section

$$c_{rI_i} := \frac{A_{ps}\cdot f_{pu}}{0.85\cdot f'_{cs}\cdot\beta_1\cdot b_e + k\cdot A_{ps}\cdot\frac{f_{pu}}{d_{p_i}}}$$

LRFD 5.7.3.1.1

Neutral axis distance:
If the compression block for the rectangular section behavior is contained within the top flange, use the c for rectangular section behavior. Otherwise, use the c for T section behavior.

$$c_I := \left|\begin{array}{l} \text{for } i \in 1..\text{rows}(SE) \\ \quad c_i \leftarrow c_{rI_i} \text{ if } \beta_1\cdot c_{rI_i} \le h_f \\ \quad c_i \leftarrow c_{fI_i} \text{ otherwise} \\ c \end{array}\right.$$

LRFD 5.7.3.2.2
LRFD 5.7.3.2.3

$d_p =$

	1
1	58.58
2	59.29
3	59.66
4	60.38
5	61.04
6	62.17
7	63.96
8	68.64
9	73.31
10	77.84
11	77.84
12	77.84
13	77.84
14	77.84
15	73.31
16	...

$\cdot$in

$c_{fI} =$

	1
1	18.198
2	18.280
3	18.323
4	18.404
5	18.477
6	18.602
7	18.792
8	19.258
9	19.683
10	20.062
11	20.062
12	20.062
13	20.062
14	20.062
15	19.683
16	...

$\cdot$in

$c_{rI} =$

	1
1	9.432
2	9.437
3	9.439
4	9.444
5	9.449
6	9.456
7	9.467
8	9.494
9	9.518
10	9.538
11	9.538
12	9.538
13	9.538
14	9.538
15	9.518
16	...

$\cdot$in

$c_I =$

	1
1	18.198
2	18.280
3	18.323
4	18.404
5	18.477
6	18.602
7	18.792
8	19.258
9	19.683
10	20.062
11	20.062
12	20.062
13	20.062
14	20.062
15	19.683
16	...

$\cdot$in

Average stress in prestressing steel at nominal flexural resistance

$$f_{psI_i} := f_{pu}\cdot\left(1 - k\cdot\frac{c_{I_i}}{d_{p_i}}\right)$$

LRFD 5.7.3.1.1

	1
1	246.514
2	246.690
3	246.781
4	246.956
5	247.114
6	247.381

$f_{psI} =$

7	247.789
8	248.788
9	249.702
10	250.516
11	250.516
12	250.516
13	250.516
14	250.516
15	249.702
16	...

$\cdot ksi$

Development Length Factor

$$\kappa := if\left(d_g > 24in, 1.6, 1\right) = 1.6$$

LRFD 5.11.4.2

Required development length at midspan (conservative to use for entire girder)

$$l_d := \kappa \cdot \left(\frac{f_{psI_{rm}}}{ksi} - \frac{2}{3} \cdot \frac{f_{pe}}{ksi} \right) \cdot d_b = 129.51 \cdot in$$

LRFD 5.11.4.2

Reduced stress in prestressing steel at nominal flexural resistance at ends of girder

Within the transfer and development lengths at the ends of the girder, the stress in the prestressing steel at nominal flexural resistance must be reduced as shown in AASHTO LRFD Figure C5.11.4.2-1.

LRFD 5.11.4.2

$f_{ps} :=$ for $i \in 1 .. rows(SE)$

$FPS_i \leftarrow f_{pe} \cdot TRAN_i$ if $SE_i \le l_t$

$FPS_i \leftarrow f_{pe} + \frac{SE_i - l_t}{l_d - l_t} \cdot \left(f_{psI_i} - f_{pe} \right)$ if $l_t < SE_i \le l_d$

$FPS_i \leftarrow f_{psI_i}$ if $l_d < SE_i < GL - l_d$

$FPS_i \leftarrow f_{pe} + \frac{GL - l_t - SE_i}{l_d - l_t} \cdot \left(f_{psI_i} - f_{pe} \right)$ if $GL - l_d \le SE_i < GL - l_t$

$FPS_i \leftarrow f_{pe} \cdot TRAN_i$ if $SE_i \ge GL - l_t$

FPS

$f_{ps} =$

	1
1	0.00
2	114.05
3	173.42
4	192.29
5	209.67
6	239.86
7	247.79
8	248.79
9	249.70
10	250.52
11	250.52
12	250.52
13	250.52
14	250.52
15	249.70
16	...

$\cdot ksi$

Recalculate stress block depth based on reduced stress in prestressing steel

Distance between neutral axis and compression face for flanged (T) section behavior

$$c_{f_i} := \frac{A_{ps} \cdot f_{ps_i} - 0.85 \cdot f'_{cs} \cdot (b_e - b_w) \cdot h_f}{0.85 \cdot f'_{cs} \cdot \beta_1 \cdot b_w}$$

Distance between neutral axis and compression face for rectangular section

$$c_{r_i} := \frac{A_{ps} \cdot f_{ps_i}}{0.85 \cdot f'_{cs} \cdot \beta_1 \cdot b_e}$$

Neutral axis distance:
If the compression block for the rectangular section behavior is contained within the top flange, use the c for rectangular section behavior. Otherwise, use the c for T section behavior.

$$c := \left| \begin{array}{l} \text{for } i \in 1 .. \text{rows}(SE) \\ \quad \left| \begin{array}{l} c_i \leftarrow c_{r_i} \text{ if } \beta_1 \cdot c_{r_i} \le h_f \\ c_i \leftarrow c_{f_i} \text{ otherwise} \end{array} \right. \\ c \end{array} \right.$$

Depth of equivalent stress block

$$a_i := \beta_1 \cdot c_i$$

$c_f =$

	1
1	-96.639
2	-43.509
3	-15.854
4	-7.062
5	1.033
6	15.098
7	18.792
8	19.258
9	19.683
10	20.062
11	20.062
12	20.062
13	20.062
14	20.062
15	19.683
16	...

$\cdot in$

$c_r =$

	1
1	0.000
2	4.172
3	6.344
4	7.034
5	7.670
6	8.774
7	9.064
8	9.101
9	9.134
10	9.164
11	9.164
12	9.164
13	9.164
14	9.164
15	9.134
16	...

$\cdot in$

$c =$

	1
1	0.000
2	4.172
3	6.344
4	7.034
5	7.670
6	15.098
7	18.792
8	19.258
9	19.683
10	20.062
11	20.062
12	20.062
13	20.062
14	20.062
15	19.683
16	...

$\cdot in$

$a =$

	1
1	0.000
2	3.546
3	5.392
4	5.979
5	6.519
6	12.833
7	15.973
8	16.369
9	16.731
10	17.053
11	17.053
12	17.053
13	17.053
14	17.053
15	16.731
16	...

$\cdot in$

Nominal flexural resistance

$$M_n := \left| \begin{array}{l} \text{for } i \in 1 .. \text{rows}(SE) \\ \quad \left| \begin{array}{l} MN_i \leftarrow A_{ps} \cdot f_{ps_i} \cdot \left(d_{p_i} - \frac{a_i}{2} \right) + 0.85 \cdot f'_{cs} \cdot (b_e - b_w) \cdot h_f \cdot \left(\frac{a_i}{2} - \frac{h_f}{2} \right) \text{ if } h_f < a_i \\ MN_i \leftarrow A_{ps} \cdot f_{ps_i} \cdot \left(d_{p_i} - \frac{a_i}{2} \right) \text{ otherwise} \end{array} \right. \\ MN \end{array} \right.$$

Distance from extreme compression fiber to the centroid of the extreme tension steel element

$$d_t := h_f + d_g - s_{bottom} = 79.000 \cdot in$$

LRFD 5.5.4.2.1

Flexure resistance factor

$$\phi_i := if\left(c_i > 0, \phi_p\left(d_t, c_i\right), 1.0\right)$$

Factored flexural resistance

$$M_{r_i} := \phi_i \cdot M_{n_i}$$

$M_n =$

	1
1	0
2	4508
3	6788
4	7583
5	8324
6	9606
7	10171
8	11003
9	11837
10	12649
11	12649
12	12649
13	12649
14	12649
15	11837
16	...

$\cdot kip \cdot ft$

$\phi =$

	1
1	1.00
2	1.00
3	1.00
4	1.00
5	1.00
6	1.00
7	1.00
8	1.00
9	1.00
10	1.00
11	1.00
12	1.00
13	1.00
14	1.00
15	1.00
16	...

$M_r =$

	1
1	0
2	4508
3	6788
4	7583
5	8324
6	9606
7	10171
8	11003
9	11837
10	12649
11	12649
12	12649
13	12649
14	12649
15	11837
16	...

$\cdot kip \cdot ft$

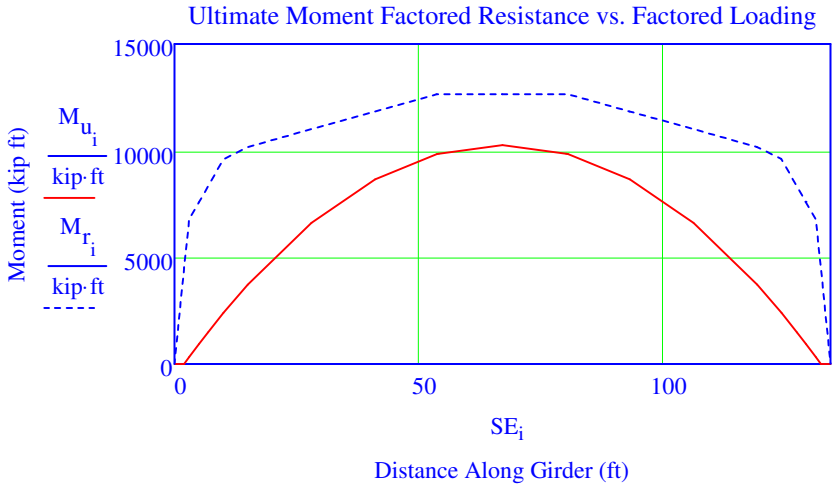

Check flexural strength at all sections

$$chk_{9,2} := \left| \begin{array}{l} CH \leftarrow \text{"OK"} \\ \text{for } i \in 1..\text{rows}(SE) \\ \quad CH \leftarrow \text{"NG"} \text{ if } M_{r_i} < M_{u_i} \\ CH \end{array} \right. \quad = \text{"OK"}$$

9.3 Minimum Reinforcement

BDM 5.1.2.H.1
LRFD 5.7.3.3.2
LRFD 5.4.2.6

Modulus of rupture

$$f_{r.Mcr.min} = 1.079 \cdot ksi$$

Compressive stress in concrete due to effective prestress forces only (after allowance for all prestress losses) at extreme fiber of section where tensile stress is caused by externally applied loads (bottom of girder)

$$f_{cpe_i} := \left| PS5_{i,2} \right|$$

Total unfactored dead load moment acting on the monolithic or noncomposite girder

$$M_{dnc_i} := \sum_{j=1}^{4} M_{i,j}$$

Section modulus for the extreme fiber of the composite section where tensile stress is caused by externally applied loads

$$S_c := S_b = 25069 \cdot in^3$$

Section modulus for the extreme fiber of the monolithic or noncomposite section where tensile stress is caused by externally applied loads

$$S_{nc} := S_{bg} = 20593 \cdot in^3$$

$$\gamma_1 := 1.56$$

$$\gamma_2 := 1.1$$

1.0 for prestressed concrete structures

$$\gamma_3 := 1.0$$

$$M_{cr.mod_i} := \gamma_3 \cdot \left[\left(\gamma_1 \cdot f_{r.Mcr.min} + \gamma_2 \cdot f_{cpe_i} \right) \cdot S_c - M_{dnc_i} \cdot \left(\frac{S_c}{S_{nc}} - 1 \right) \right]$$

$M_{dnc} =$

	1
1	0
2	0
3	129
4	375
5	594
6	958
7	1490
8	2661
9	3495
10	3981
11	3991
12	4169
13	3991

$\cdot kip \cdot ft$

$M_{cr.mod} =$

	1
1	3516
2	7320
3	9330
4	9392
5	9449
6	9552
7	9722
8	10213
9	10778
10	11395
11	11393
12	11354
13	11393

$\cdot kip \cdot ft$

$M_r =$

	1
1	0
2	4508
3	6788
4	7583
5	8324
6	9606
7	10171
8	11003
9	11837
10	12649
11	12649
12	12649
13	12649

$\cdot kip \cdot ft$

14	3981
15	3495
16	...

14	11395
15	10778
16	...

14	12649
15	11837
16	...

Check if minimum reinforcement is provided. This check need not be satisfied if section is compression controlled.

$chk_{9,3} :=$ CH ← "OK"

for $i \in 1 .. rows(SE)$

CH ← "NG" if $M_{r_i} < \min\left(M_{cr.mod_i}, 1.33 \cdot M_{u_i}\right)$

CH = "OK"

10. Shear & Longitudinal Reinforcement Design

Home

10.1 Factored Shear Loads

Factored shears for Strength 1 Limit State (ultimate):

$$V_u := \left| \begin{array}{l} \text{for } i \in 1..\text{rows}(SE) \\ \quad UV_i \leftarrow \left| \eta \cdot \left(\gamma_{DC} \cdot \sum_{j=1}^{5} V_{i,j} + \gamma_{DW} \cdot V_{i,6} + \gamma_{LL} \cdot DF_v \cdot V_{i,10} \right) \right| \\ UV \end{array} \right|$$

$V_u =$ ·kip

	1
1	0.00
2	357.81
3	353.11
4	343.95
5	335.59
6	321.18
7	298.69
8	240.65
9	180.14
10	125.97
11	124.30
12	69.55
13	124.29
14	125.97
15	180.13
16	...

10.2 Critical Section Location

The shear design of prestressed members shall be based on the general procedure of AASHTO LRFD 5.8.3.4.2. The minimum angle θ shall be 25 degrees. BDM 5.2.4.C

Compute effective shear depth

Effective depth from extreme compression fiber to the centroid of the tensile force (mild steel reinforcement is neglected) $d_{e_i} := d_{p_i}$ LRFD 5.8.2.9

Check if sectional shear model is appropriate. If not, use strut and tie. $chk_{10,1} := \text{if}\left(\frac{L}{2} \geq 2 \cdot d_{ers_L}, \text{"OK"}, \text{"NG"}\right) = \text{"OK"}$ LRFD 5.8.1.1

Distance between resultants of tensile and compressive flexure forces $d_{vI_i} := \frac{M_{n_i}}{A_{ps} \cdot f_{ps_i}}$ LRFD C5.8.2.9-1

Section total depth $h := d_g + t_s = 81.0 \cdot \text{in}$

Effective shear depth $d_{v_i} := \max\left(d_{vI_i}, 0.9 \cdot d_{e_i}, 0.72 \cdot h\right)$ LRFD 5.8.2.9

	1
1	58.579
2	59.288
3	59.658

	1
1	0.00
2	57.52
3	56.96

	1
1	58.32
2	58.32
3	58.32

$d_e =$

3	59.658
4	60.377
5	61.036
6	62.174
7	63.962
8	68.636
9	73.310
10	77.842
11	77.842
12	77.842
13	77.842
14	77.842
15	73.310
16	...

$\cdot in$

$d_{vI} =$

3	56.96
4	57.39
5	57.78
6	58.28
7	59.73
8	64.36
9	68.99
10	73.48
11	73.48
12	73.48
13	73.48
14	73.48
15	68.99
16	...

$\cdot in$

$d_v =$

3	58.32
4	58.32
5	58.32
6	58.32
7	59.73
8	64.36
9	68.99
10	73.48
11	73.48
12	73.48
13	73.48
14	73.48
15	68.99
16	...

$\cdot in$

Critical section for shear

Distance to critical section from support when reaction force introduces compression into the end region (use centerline of support instead of face to be conservative)

$d_c := d_{vrs_L} = 4.8600\,ft$ LRFD 5.8.3.2

Modify d_{est} above to recompute section forces and stresses at the correct critical section for shear, if necessary.

$chk_{10,2} := if(d_{est} = d_c, "OK", "NG") = "OK"$

10.3 Shear Design

LRFD 5.8.3.4.2

Calculate longitudinal strain

Angle of harped strands inclination

$\theta_{harp} := atan(slope_h) = 5.420 \cdot deg$

Effective PS Force in harped strands

$P_{h_i} := f_{pe} \cdot TRAN_i \cdot A_p \cdot N_h$

Vert component of Eff PS Force in harp strnds

$$V_{p_i} := \begin{cases} 0kip & \text{if } 0.4 \cdot GL \le SE_i \le 0.6 \cdot GL \\ P_{h_i} \cdot \sin(\theta_{harp}) & \text{otherwise} \end{cases}$$

For usual levels of prestressing

$f_{po} := 0.7 \cdot f_{pu} = 189.0 \cdot ksi$

Factored axial force (positive for tension)

$N_u := 0.0 \cdot kip$

	1
1	0.0
2	297.0
3	451.6
4	451.6
5	451.6
6	451.6

	1
1	0.0
2	28.1
3	42.7
4	42.7
5	42.7
6	42.7

$P_h =$

6	451.6
7	451.6
8	451.6
9	451.6
10	451.6
11	451.6
12	451.6
13	451.6
14	451.6
15	451.6
16	...

$\cdot kip$

$V_p =$

6	42.7
7	42.7
8	42.7
9	42.7
10	0.0
11	0.0
12	0.0
13	0.0
14	0.0
15	42.7
16	...

$\cdot kip$

Area of prestressing steel on the flexural tension side of the member

$$A_{psv_i} := \text{if}\left(t_s + Y_{tg} + EC_{i,1} \geq \frac{h}{2}, N_p \cdot A_p, N_s \cdot A_p\right)$$

Reduction factor for A_{psv} if strand is not fully developed at section under consideration

$$RF_i := \frac{f_{ps_i}}{f_{psI_i}}$$

Area of non-prestressed reinforcing steel on the flexural tension side

$$A_s := 0.0 \cdot in^2$$

Factored Moment - longitudinal strain calculation

$$M_{uv_i} := \max\left(\left|M_{u_i}\right|, \left|V_{u_i} - V_{p_i}\right| \cdot d_{v_i}\right)$$

Calculated Longitudinal strain

$$\varepsilon_{s_i} := \min\left(\max\left(\frac{\frac{\left|M_{uv_i}\right|}{d_{v_i}} + 0.5 \cdot N_u + \left|V_{u_i} - V_{p_i}\right| - A_{psv_i} \cdot RF_i \cdot f_{po} \cdot TRAN_i}{E_s \cdot A_s + E_p \cdot A_{psv_i} \cdot RF_i}, 0\right), .006\right)$$

For sections closer than d_v to the face of the support, the strain at d_v may be used

$$\varepsilon_{s_i} := \begin{cases} \varepsilon_{s_{rc}} & \text{if } SE_i \leq SE_{rc} \\ \varepsilon_{s_{rows(SE)-rc+1}} & \text{if } SE_i \geq SE_{rows(SE)-rc+1} \\ \varepsilon_{s_i} & \text{otherwise} \end{cases}$$

$A_{psv} =$

	1
1	5.642
2	5.642
3	5.642
4	5.642
5	5.642
6	5.642
7	5.642
8	8.246
9	8.246

$\cdot in^2$

$RF =$

	1
1	0.00
2	0.46
3	0.70
4	0.78
5	0.85
6	0.97
7	1.00
8	1.00
9	1.00

$M_{uv} =$

	1
1	0
2	1603
3	1509
4	1464
5	1489
6	2397
7	3723
8	6613
9	8649

$\cdot kip \cdot ft$

$\varepsilon_s =$

	1
1	0.000000
2	0.000000
3	0.000000
4	0.000000
5	0.000000
6	0.000000
7	0.000000
8	0.000000
9	0.000355

9	8.246
10	8.246
11	8.246
12	8.246
13	8.246
14	8.246
15	8.246
16	...

9	1.00
10	1.00
11	1.00
12	1.00
13	1.00
14	1.00
15	1.00
16	...

9	8649
10	9834
11	9859
12	10253
13	9859
14	9834
15	8649
16	...

9	0.000355
10	0.000739
11	0.000749
12	0.000790
13	0.000749
14	0.000739
15	0.000355
16	...

Theta and beta factors for shear

LRFD 5.8.3.4.2

Angle of inclination of diagonal compressive stresses $\theta_i := \left(29 + 3500 \cdot \varepsilon_{s_i}\right) \cdot \text{deg}$ LRFD 5.8.3.4.2

Factor indicating ability of diagonally cracked concrete to transmit tension for sections containing at least the minimum amount of transverse reinforcement $\beta_i := \frac{4.8}{1 + 750 \cdot \varepsilon_{s_i}}$

$\theta =$

	1
1	29.00
2	29.00
3	29.00
4	29.00
5	29.00
6	29.00
7	29.00
8	29.00
9	30.24
10	31.59
11	31.62
12	31.76
13	31.62
14	31.59
15	30.24
16	...

$\cdot \text{deg}$

$\beta =$

	1
1	4.80
2	4.80
3	4.80
4	4.80
5	4.80
6	4.80
7	4.80
8	4.80
9	3.79
10	3.09
11	3.07
12	3.01
13	3.07
14	3.09
15	3.79
16	...

Nominal Shear Resistance

LRFD 5.8.3.3

Effective girder web width $b_v := b_w = 6.125 \cdot \text{in}$

Area of shear reinforcement within a distance "s" $A_v := 2 \cdot \text{area}\left(\text{bar}_v\right) = 0.618 \cdot \text{in}^2$

Stirrup spacing at each section. If section is in the first or last stirrup zones (the clearance to the first set of stirrups from the ends of the girder) then use the spacing for the adjacent zone.

	1
1	2.5
2	6.0
3	6.0
4	6.0
5	6.0
6	12.0

$$s_i := \begin{| return\ VR_{2,2}\ if\ SE_i \le VR_{1,1} \\ return\ VR_{rows(VR)-1,2}\ if\ SE_i \ge GL - VR_{rows(VR),1} \\ for\ k \in 1..rows(VR) \\ \quad return\ VR_{k,2}\ if\ SE_i \le \sum_{j=1}^{k} VR_{j,1}}$$

$s =$

7	12.0
8	18.0
9	18.0
10	18.0
11	18.0
12	18.0
13	18.0
14	18.0
15	18.0
16	...

$\cdot in$

Nominal shear resistance provided by tensile stress in concrete

$$V_{c_i} := 0.0316 \cdot \beta_i \cdot \sqrt{\frac{f'_c}{ksi}} \cdot ksi \cdot b_v \cdot d_{v_i}$$

Nominal shear resistance provided by transverse reinforcement (LRFD 5.8.3.3)

$$V_{s_i} := \frac{A_v \cdot f_y \cdot d_{v_i} \cdot \cot(\theta_i)}{s_i}$$

Design shear resistance

$$V_{n_i} := \min\left(\begin{pmatrix} V_{c_i} + V_{s_i} + V_{p_i} \\ 0.25 \cdot f'_c \cdot b_v \cdot d_{v_i} + V_{p_i} \end{pmatrix}\right)$$

$V_c =$

	1
1	158.0
2	158.0
3	158.0
4	158.0
5	158.0
6	158.0
7	161.8
8	174.3
9	147.6
10	128.1
11	127.4
12	125.0
13	127.4
14	128.1
15	147.6
16	...

$\cdot kip$ $V_s =$

	1
1	1560.5
2	650.2
3	650.2
4	650.2
5	650.2
6	325.1
7	333.0
8	239.2
9	243.8
10	246.2
11	245.8
12	244.5
13	245.8
14	246.2
15	243.8
16	...

$\cdot kip$ $V_n =$

	1
1	759.1
2	787.1
3	801.7
4	801.7
5	801.7
6	525.7
7	537.4
8	456.1
9	434.0
10	374.3
11	373.3
12	369.5
13	373.3
14	374.3
15	434.0
16	...

$\cdot kip$ $\phi_v \cdot V_n =$

	1
1	683.2
2	708.4
3	721.6
4	721.6
5	721.6
6	473.2
7	483.7
8	410.5
9	390.6
10	336.8
11	336.0
12	332.5
13	336.0
14	336.8
15	390.6
16	...

$\cdot kip$

Check adequacy in shear

$chk_{10,3} :=$ | CH ← "OK" = "OK"
for $i \in 1..rows(SE)$
CH ← "NG" if $\phi_v \cdot V_{n_i} < V_{u_i}$
CH

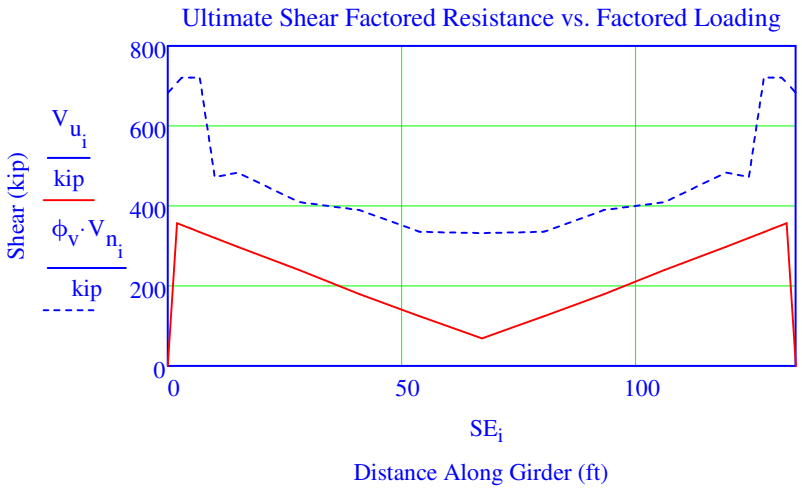

Minimum Transverse Reinforcement

Min shear reinforcement (LRFD 5.8.2.5)

$$A_{v.min_i} := 0.0316 \cdot \sqrt{\frac{f'_c}{ksi}} \cdot ksi \cdot \frac{b_v \cdot s_i}{f_y}$$

LRFD 5.8.2.5

Check minimum reinforcement limit

$chk_{10,4} :=$ | CH ← "OK" = "OK"
for $i \in 1..rows(SE)$
CH ← "NG" if $A_v < A_{v.min_i}$
CH

$A_{v.min} =$

	1
1	0.024
2	0.056
3	0.056
4	0.056
5	0.056
6	0.113
7	0.113
8	0.169
9	0.169
10	0.169
11	0.169
12	0.169
13	0.169
14	0.169
15	0.169
16	...

$\cdot in^2$

Maximum Spacing of Transverse Reinforcement

Shear stress on concrete

$$v_{u_i} := \frac{\left| V_{u_i} - \phi_v \cdot V_{p_i} \right|}{\phi_v \cdot b_v \cdot d_{v_i}}$$

LRFD 5.8.2.9

Max shear reinforcement spacing

BDM 5.2.2.B
LRFD 5.8.2.7

$$s_{max_i} := \begin{cases} \min\left(0.8\, d_{v_i}, 18\text{in}\right) & \text{if } v_{u_i} < 0.125 \cdot f'_c \\ \min\left(0.4\, d_{v_i}, 12\text{in}\right) & \text{otherwise} \end{cases}$$

Check maximum shear reinforcement spacing

$$chk_{10,5} := \begin{cases} CH \leftarrow \text{"OK"} \\ \text{for } i \in 1 .. \text{rows}(SE) \\ \quad CH \leftarrow \text{"NG"} \text{ if } s_{max_i} < s_i \\ CH \end{cases} = \text{"OK"}$$

$v_u =$

	1
1	0.000
2	1.034
3	0.979
4	0.950
5	0.924
6	0.880
7	0.791
8	0.570
9	0.373
10	0.311
11	0.307
12	0.172
13	0.307
14	0.311
15	0.373
16	...

·ksi

$s_{max} =$

	1
1	18.0
2	18.0
3	18.0
4	18.0
5	18.0
6	18.0
7	18.0
8	18.0
9	18.0
10	18.0
11	18.0
12	18.0
13	18.0
14	18.0
15	18.0
16	...

·in

10.4 Longitudinal Reinforcement

LRFD 5.8.3.5

Resistance Factor for axial load (compression) $\phi_{cN} := \phi_c = 0.75$

Required area of prestressing

$$A_{ps.req_i} := \begin{cases} a \leftarrow 0\text{in}^2 \text{ if } SE_i = 0\text{ft} \vee SE_i = GL \\ a \leftarrow \left[\frac{\left| M_{u_i} \right|}{d_{v_i} \cdot \phi_i} + 0.5 \cdot \frac{N_u}{\phi_{cN}} + \left(\left| \frac{V_{u_i}}{\phi_v} - V_{p_i} \right| - 0.5 \cdot \min\left(V_{s_i}, \frac{V_{u_i}}{\phi_v} \right) \right) \cdot \cot\left(\theta_i\right) \right] \cdot \frac{1}{f_{ps_i}} \text{ if } SE_{rc} \le SE_i \le GL - SE_{rc} \\ a \leftarrow \left[\left(\frac{V_{u_i}}{\phi_v} - 0.5 \cdot \min\left(V_{s_i}, \frac{V_{u_i}}{\phi_v} \right) - V_{p_i} \right) \cdot \cot\left(\theta_i\right) \right] \cdot \frac{1}{f_{ps_i}} \text{ otherwise} \\ a \end{cases}$$

Check if required area is provided

	1
1	0.000

$chk_{10,6} :=$ | CH ← "OK" = "OK"
for i ∈ 1 .. rows(SE)
CH ← "NG" if $A_{psv_i} < A_{ps.req_i}$
CH

$A_{ps.req} =$

2	2.701
3	1.597
4	1.393
5	2.699
6	3.197
7	3.916
8	5.719
9	6.419
10	6.866
11	6.875
12	6.933
13	6.875
14	6.866
15	6.419
16	...

$\cdot in^2$

10.5 Horizontal Interface Shear between Girder and Slab

It is conservative to compute the interface shear force using the full factored loading applied to the composite deck slab and girder. Compute actual shear stress using mechanics of materials rather than use AASHTO LRFD 5.8.4.2. BDM 5.2.2.C

First Moment of Transformed Slab from Neutral Axis $Q_{slab} := A_{slab} \cdot \left(Y_t + \frac{t_s}{2} \right) = 10763.3 \cdot in^3$

Permanent Net Compressive Force Normal to the Shear Plane $P_c := w_{cs} \cdot t_s \cdot b_e = 0.588 \cdot \frac{kip}{ft}$

Area of stirrups crossing interface per foot $a_{vf_i} := \frac{A_v}{s_i}$

Shear Force at Girder/Slab Interface per foot $V_{ui_i} := \frac{V_{u_i} \cdot Q_{slab}}{I_c}$

Cohesion Factor $c_{vi} := 0.28ksi$ LRFD 5.8.4.3

Friction Factor $\mu := 1.0$ LRFD 5.8.4.3

Fraction of Concrete Strength Available $K_{1vi} := 0.3$ LRFD 5.8.4.3

Limiting Interface Shear Resistance $K_2 := 1.8ksi$ LRFD 5.8.4.3

Nominal Interface Shear Resistance

$$V_{ni_i} := \min\left[c_{vi} \cdot b_f + \mu \cdot \left(a_{vf_i} \cdot f_y + P_c\right), K_{1vi} \cdot f'_{cs} \cdot b_f, K_2 \cdot b_f\right]$$ LRFD 5.8.4.1

Factored Interface Shear Resistance $V_{ri_i} := \phi_v \cdot V_{ni_i}$ LRFD 5.8.4.1

Check adequacy in interface shear

$$chk_{10,7} := \left| \begin{array}{l} CH \leftarrow \text{"OK"} \quad = \text{"OK"} \\ \text{for } i \in 1..\text{rows}(SE) \\ \quad CH \leftarrow \text{"NG"} \quad \text{if } V_{ri_i} < V_{ui_i} \\ CH \end{array} \right.$$

Check stirrup spacing adequacy

$$chk_{10,8} := \left| \begin{array}{l} CH \leftarrow \text{"OK"} \quad = \text{"OK"} \\ \text{for } i \in 1..\text{rows}(SE) \\ \quad CH \leftarrow \text{"NG"} \quad \text{if } 24\text{in} < s_i \\ CH \end{array} \right.$$

LRFD 5.8.4.2

Minimum Area of Interface Shear Reinforcement

$$a_{vf.min_i} := \left| \begin{array}{l} \text{return } 0\frac{\text{in}^2}{\text{ft}} \quad \text{if } \frac{V_{ui_i}}{b_f} < 0.210\text{ksi} \\ \min\left[\frac{0.05 \cdot b_f}{\frac{f_y}{\text{ksi}}}, \max\left[\frac{1}{f_y} \cdot \left[\frac{1}{\mu} \cdot \left(\frac{1.33 \cdot V_{ui_i}}{\phi_v} - c_{vi} \cdot b_f\right) - P_c\right], 0\frac{\text{in}^2}{\text{ft}}\right]\right] \quad \text{otherwise} \end{array} \right.$$

LRFD 5.8.4.4

Check minimum area of interface shear reinforcement

$$chk_{10,9} := \left| \begin{array}{l} CH \leftarrow \text{"OK"} \quad = \text{"OK"} \\ \text{for } i \in 1..\text{rows}(SE) \\ \quad CH \leftarrow \text{"NG"} \quad \text{if } a_{vf_i} < a_{vf.min_i} \\ CH \end{array} \right.$$

LRFD 5.8.4.4

$V_{ui} =$ (kip/ft)

	1
1	0.000
2	38.962
3	38.450
4	37.453
5	36.542
6	34.973
7	32.524
8	26.205
9	19.615
10	13.717
11	13.535
12	7.573
13	13.534
14	13.717
15	19.614
16	

$V_{ri} =$ (kip/ft)

	1
1	308.891
2	215.449
3	215.449
4	215.449
5	215.449
6	182.077
7	182.077
8	170.953
9	170.953
10	170.953
11	170.953
12	170.953
13	170.953
14	170.953
15	170.953
16	

$a_{vf} =$ (in^2/ft)

	1
1	2.97
2	1.24
3	1.24
4	1.24
5	1.24
6	0.62
7	0.62
8	0.41
9	0.41
10	0.41
11	0.41
12	0.41
13	0.41
14	0.41
15	0.41
16	

$a_{vf.min} =$ (in^2/ft)

	1
1	0.00
2	0.00
3	0.00
4	0.00
5	0.00
6	0.00
7	0.00
8	0.00
9	0.00
10	0.00
11	0.00
12	0.00
13	0.00
14	0.00
15	0.00
16	

10.6 Pretensioned Anchorage Zone

Factored Splitting Resistance

BDM 5.6.2.F
LRFD 5.10.10.1

Distance from end contributing to splitting resistance $l_{split} := \frac{d_g}{4} = 18.50 \cdot in$

Total area of vertical reinforcement located within bursting length = h/4

$A_{s.burst} :=$ for $i \in 1 .. rows(VR)$ $= 4.326 \cdot in^2$

$x \leftarrow i$ if $l_{split} > \sum_{j=1}^{i} VR_{j,1}$

for $i \in 1 .. x + 1$

$AV \leftarrow AV + A_v \cdot ceil\left(\frac{VR_{i,1}}{VR_{i,2}}\right)$ if $i \le x$

$AV \leftarrow AV + A_v \cdot floor\left(\frac{l_{split} - \sum_{j=1}^{i-1} VR_{j,1}}{VR_{i,2}}\right)$ otherwise

AV

Maximum stress in steel $f_s := 20ksi$

Splitting Resistance $P_r := f_s \cdot A_{s.burst} = 86.52 \cdot kip$

Minimum required splitting resistance $P_{r.min} := 0.04 \cdot f_{pbt} \cdot A_{pstemp} = 76.58 \cdot kip$

Check if adequate splitting resistance is required. If not, required additional reinforcement can be provided at 2.5" spacing beyond the bursting length.

$chk_{10,10} := if\left(P_r \ge P_{r.min}, "OK" , "NG"\right) = "OK"$

Confinement Reinforcement

Confinement reinforcement shall be provided at the ends of beams to confine the prestressing steel in the bottom flange.

BDM 5.6.2.G
LRFD 5.10.10.2

Minimum length of PS confinement in bottom flange $l_{confine} := 1.5 \cdot d_g = 9.250 \cdot ft$

11. Deflection and Camber

Home

LRFD 5.7.3.6.2
BDM 5.2.4

Positive deflection is defined upward (in direction of camber).

11.1 Deflections Due to Prestress

The following function finds camber induced by straight strands, where:
P = Prestressing Force
e = Eccentricity of Prestressing Force from C.G. (positive upwards)
E = Modulus of Elasticity
I = Moment of Inertia
x = Distance from left support to compute deflection
L = Span Length between supports

$$\text{Straight}\Delta(P,e,E,I,x,L) := \begin{cases} 0 & \text{if } x < 0\text{in} \vee x > L \\ \dfrac{P\cdot e}{2\cdot E\cdot I}\cdot x\cdot(x-L) & \text{otherwise} \end{cases}$$

The following function finds camber induced by harped strands, where:
P = Prestressing Force
e_1 = Eccentricity of Straight Midspan Portion of Prestressing Force from C.G. (positive upwards).
e_2 = Eccentricity of Prestressing Force at support from C.G. (positive upwards)
E = Modulus of Elasticity
I = Moment of Inertia
x = Distance from left support to compute deflection
L = Span Length between supports
b = Distance between support and harp point (assumed symmetrical)

$$\text{Harp}\Delta(P,e_1,e_2,E,I,x,L,b) := \begin{cases} \text{return } 0 & \text{if } x < 0\text{in} \vee x > L \\ e \leftarrow -(e_2 - e_1) & \\ \text{return } \dfrac{P\cdot e\cdot x}{6\cdot E\cdot I\cdot b}\cdot\left(x^2 + 3\cdot b^2 - 3\cdot b\cdot L\right) + \dfrac{P\cdot e_2}{2\cdot E\cdot I}\cdot x\cdot(x-L) & \text{if } x \le b \\ \text{return } \dfrac{P\cdot e}{6\cdot E\cdot I}\cdot\left(3x^2 + b^2 - 3\cdot L\cdot x\right) + \dfrac{P\cdot e_2}{2\cdot E\cdot I}\cdot x\cdot(x-L) & \text{if } b < x < L-b \\ \text{return } \dfrac{P\cdot e\cdot(L-x)}{6\cdot E\cdot I\cdot b}\cdot\left[(L-x)^2 + 3\cdot b^2 - 3\cdot b\cdot L\right] + \dfrac{P\cdot e_2}{2\cdot E\cdot I}\cdot x\cdot(x-L) & \text{if } L-b \le x \end{cases}$$

Deflections due to straight strands $\Delta S_i := \text{Straight}\Delta\left(f_{peP1}\cdot N_s\cdot A_p, -e_s, E_{ci}, I_g, SE_i - P2, L\right)$

Deflections due to temporary strands $\Delta T_i := \text{Straight}\Delta\left(f_{peT1}\cdot N_t\cdot A_p, -e_{temp}, E_{ci}, I_g, SE_i - P2, L\right)$

Deflections due to release of temporary strands $\Delta TR_i := -\text{Straight}\Delta\left[\left(f_{peT1} + \Delta f_{pLTH}\right)\cdot N_t\cdot A_p, -e_{temp}, E_c, I_g, SE_i - P2, L\right]$

Deflections due to harp strands $\Delta H_i := \text{Harp}\Delta\left(f_{peP1}\cdot N_h\cdot A_p, -EC_{rm,1}, -EC_{rs_L,1}, E_{ci}, I_g, SE_i - P2, L, x_h - P2\right)$

$\Delta S =$

	1
1	0.000
2	0.000
3	0.082
4	0.238
5	0.376
6	0.606
7	0.941
8	1.672
9	2.195
10	2.502
11	2.508
12	2.613
13	2.508
14	2.502
15	2.195
16	...

$\cdot in$

$\Delta T =$

	1
1	0.000
2	0.000
3	-0.022
4	-0.063
5	-0.099
6	-0.160
7	-0.248
8	-0.441
9	-0.579
10	-0.660
11	-0.661
12	-0.689
13	-0.661
14	-0.660
15	-0.579
16	...

$\cdot in$

$\Delta TR =$

	1
1	0.000
2	0.000
3	0.020
4	0.057
5	0.091
6	0.146
7	0.227
8	0.403
9	0.529
10	0.603
11	0.604
12	0.629
13	0.604
14	0.603
15	0.529
16	...

$\cdot in$

$\Delta H =$

	1
1	0.000
2	0.000
3	0.010
4	0.031
5	0.051
6	0.089
7	0.155
8	0.346
9	0.529
10	0.659
11	0.662
12	0.708
13	0.662
14	0.659
15	0.529
16	...

$\cdot in$

11.2 Deflections due to Dead Loads

The following function returns the deflection of a simple span due to a concentrated load at any point:
P = Concentrated Load
a = Distance from left support that load is applied
x = Distance from left support to compute deflection
L = Length of simple span between supports
E = Modulus of Elasticity
I = Moment of Inertia

$$\Delta_{POINT}(P,a,x,L,E,I) := \begin{cases} \text{return } 0 \text{ if } x < 0in \vee x > L \\ \text{return } 0 \text{ if } a < 0in \vee a > L \\ \text{return } \frac{P\cdot(L-a)\cdot x}{6\cdot E\cdot I\cdot L}\cdot\left[L^2-(L-a)^2-x^2\right] \text{ if } x < a \\ \text{return } \frac{P\cdot a^2\cdot(L-a)^2}{3\cdot E\cdot I\cdot L} \text{ if } x = a \\ \text{return } \frac{P\cdot a\cdot(L-x)}{6\cdot E\cdot I\cdot L}\cdot\left[L^2-a^2-(L-x)^2\right] \text{ otherwise} \end{cases}$$

The following function returns the deflection of a simple span due to a uniform load:
w = Uniform Load
x = Distance from left support to compute deflection
L = Length of simple span between supports
E = Modulus of Elasticity
I = Moment of Inertia

$$\Delta_{UNIFORM}(w,x,L,E,I) := \begin{cases} 0 & \text{if } x < 0in \vee x > L \\ \frac{w \cdot x}{24 \cdot E \cdot I} \cdot \left(L^3 - 2 \cdot L \cdot x^2 + x^3\right) & \text{otherwise} \end{cases}$$

Deflection Due to girder dead load

$$\Delta G_i := -\Delta_{UNIFORM}\left(w_g, SE_i - P2, L, E_{ci}, I_g\right)$$

Deflection Due to pad and slab dead load

$$\Delta SL_i := -\Delta_{UNIFORM}\left(w_{pu} + w_s, SE_i - P2, L, E_c, I_g\right)$$

Deflection Due to barrier dead load

$$\Delta BAR_i := -\Delta_{UNIFORM}\left(w_b, SE_i - P2, L, E_c, I_c\right)$$

Due to intermediate diaphragms

$$\Delta DIA := \begin{cases} \text{for } i \in rs_L .. rs_R \\ \quad a \leftarrow 0ft \\ \quad \Delta_i \leftarrow 0in \\ \quad \text{for } j \in 1 .. n_{dia} \\ \quad\quad a \leftarrow a + DiaSpacing \\ \quad\quad \Delta_i \leftarrow \Delta_i - \Delta_{POINT}\left(DiaWt, a, SE_i - P2, L, E_c, I_g\right) \\ \Delta_{rows(SE)} \leftarrow 0in \\ \Delta \end{cases}$$

$\Delta G =$

	1
1	0.000
2	0.000
3	-0.042
4	-0.125
5	-0.200
6	-0.329
7	-0.527
8	-0.997
9	-1.365
10	-1.594
11	-1.599
12	-1.679
13	-1.599
14	-1.594
15	-1.365
16	...

$\cdot in \quad \Delta SL =$

	1
1	0.000
2	0.000
3	-0.031
4	-0.092
5	-0.147
6	-0.242
7	-0.387
8	-0.733
9	-1.003
10	-1.171
11	-1.175
12	-1.233
13	-1.175
14	-1.171
15	-1.003
16	...

$\cdot in \quad \Delta BAR =$

	1
1	0.000
2	0.000
3	-0.004
4	-0.011
5	-0.017
6	-0.028
7	-0.044
8	-0.084
9	-0.115
10	-0.134
11	-0.135
12	-0.141
13	-0.135
14	-0.134
15	-0.115
16	...

$\cdot in \quad \Delta DIA =$

	1
1	0.000
2	0.000
3	-0.003
4	-0.009
5	-0.015
6	-0.024
7	-0.039
8	-0.074
9	-0.101
10	-0.118
11	-0.118
12	-0.125
13	-0.118
14	-0.118
15	-0.101
16	...

$\cdot in$

11.3 Deflections Due to Creep

LRFD 5.4.2.3.2

The following functions determine the creep coefficient where
t = Maturity of Concrete (days), age of concrete between time of loading and time for analysis of creep effect
t_i = Age of concrete (days) at time of load application

f = Specified compressive strength of concrete at time of prestressing

Volume/Surface Area Factor $k_s := \max\left(1.45 - 0.13\cdot\frac{VS_r}{in}, 1.0\right) = 1.035$

Humidity Factor $k_{hc} := 1.56 - 0.008\cdot\left(\frac{H}{\%}\right) = 0.960$

Concrete Strength Factor $k_f(f) := \frac{5}{1 + \frac{f}{ksi}}$

Time Development Factor $k_{td}(t,f) := \frac{\frac{t}{day}}{61 - 4\cdot\left(\frac{f}{ksi}\right) + \frac{t}{day}}$

Creep Coefficient $\psi_{cr}(t, t_i, f) := 1.9\cdot k_s\cdot k_{hc}\cdot k_f(f)\cdot k_{td}(t,f)\cdot\left(\frac{t_i}{day}\right)^{-0.118}$

Time Intervals for Construction and Creep Coefficients

BDM 5.2.4

Note: 1 day of accelerated curing is treated as 7 days for concrete creep

BDM 5.1.1.E

	Time Intervals (days)		
Construction Timing	1	2	3
Minimum timing D_{40}	7	10	40
Maximum timing D_{120}	7	90	120

1 - Casting Girder to Releasing Strands
2 - Releasing Strands to Cutting Temporary Strands and Casting Diaphrams
3 - Releasing Strands to Placing Deck

Creep Coefficients for Minimum timing

$\psi_{10.7} := \psi_{cr}(10day, 7day, f'_{ci}) = 0.215$

$\psi_{40.7} := \psi_{cr}(40day, 7day, f'_{ci}) = 0.497$

$\psi_{30.10} := \psi_{cr}(30day, 10day, f'_c) = 0.399$

Creep Coefficients for Maximum timing

$\psi_{90.7} := \psi_{cr}(90day, 7day, f'_{ci}) = 0.657$

$\psi_{120.7} := \psi_{cr}(120day, 7day, f'_{ci}) = 0.702$

$\psi_{30.90} := \psi_{cr}(30day, 90day, f'_c) = 0.308$

Deflections due to creep between girder fabrication and temp strand removal / diaphragm placement for Minimum Timing

$\Delta CR1_{min_i} := \psi_{10.7}\cdot(\Delta S_i + \Delta H_i + \Delta T_i + \Delta G_i)$

Deflections due to creep between girder fabrication and temp strand removal / diaphragm placement for Maximum Timing

$\Delta CR1_{max_i} := \psi_{90.7}\cdot(\Delta S_i + \Delta H_i + \Delta T_i + \Delta G_i)$

Deflections due to creep between temp strand removal / diaphragm placement and deck placement fo

Minimum Timing

$$\Delta CR2_{min_i} := (\psi_{40.7} - \psi_{10.7}) \cdot (\Delta S_i + \Delta H_i + \Delta T_i + \Delta G_i) + \psi_{30.10} \cdot (\Delta DIA_i + \Delta TR_i)$$

Deflections due to creep between temp strand removal / diaphragm placement and deck placement for Maximum Timing

$$\Delta CR2_{max_i} := (\psi_{120.7} - \psi_{90.7}) \cdot (\Delta S_i + \Delta H_i + \Delta T_i + \Delta G_i) + \psi_{30.90} \cdot (\Delta DIA_i + \Delta TR_i)$$

$\Delta CR1_{min}$ =

	1
1	0.00
2	0.00
3	0.01
4	0.02
5	0.03
6	0.04
7	0.07
8	0.12
9	0.17
10	0.20
11	0.20
12	0.21
13	0.20
14	0.20
15	0.17
16	...

·in $\Delta CR1_{max}$ =

	1
1	0.00
2	0.00
3	0.02
4	0.05
5	0.08
6	0.13
7	0.21
8	0.38
9	0.51
10	0.60
11	0.60
12	0.63
13	0.60
14	0.60
15	0.51
16	...

·in $\Delta CR2_{min}$ =

	1
1	0.00
2	0.00
3	0.01
4	0.04
5	0.07
6	0.11
7	0.17
8	0.29
9	0.39
10	0.45
11	0.45
12	0.47
13	0.45
14	0.45
15	0.39
16	...

·in $\Delta CR2_{max}$ =

	1
1	0.00
2	0.00
3	0.01
4	0.02
5	0.03
6	0.05
7	0.07
8	0.13
9	0.17
10	0.19
11	0.19
12	0.20
13	0.19
14	0.19
15	0.17
16	...

·in

11.4 "D" and "C" Dimensions

"D" dimension at 40 days

$$D40_i := \Delta S_i + \Delta T_i + \Delta H_i + \Delta G_i + \Delta CR1_{min_i} + \Delta TR_i + \Delta DIA_i + \Delta CR2_{min_i}$$

"D" dimension at 120 days

$$D120_i := \Delta S_i + \Delta T_i + \Delta H_i + \Delta G_i + \Delta CR1_{max_i} + \Delta TR_i + \Delta DIA_i + \Delta CR2_{max_i}$$

Screed setting dimension "C" = - elastic deflection due to slab, traffic barrier, and overlay on noncomposite

$$C_i := -(\Delta SL_i + \Delta BAR_i)$$

Excess girder camber at 120 days to find "A" dim. $\Delta EXCESS_{120_i} := D120_i - C_i$

	1
1	0.000
2	0.000
3	0.065
4	0.188

	1
1	0.000
2	0.000
3	0.069
4	0.200

	1
1	0.000
2	0.000
3	0.035
4	0.102

	1
1	0.000
2	0.000
3	0.034
4	0.098

$D40 =$

5	0.297
6	0.478
7	0.743
8	1.329
9	1.766
10	2.036
11	2.042
12	2.134
13	2.042
14	2.036
15	1.766
16	...

$\cdot in$ $D120 =$

5	0.316
6	0.509
7	0.791
8	1.417
9	1.887
10	2.178
11	2.184
12	2.282
13	2.184
14	2.178
15	1.887
16	...

$\cdot in$ $C =$

5	0.164
6	0.270
7	0.432
8	0.817
9	1.118
10	1.305
11	1.309
12	1.375
13	1.309
14	1.305
15	1.118
16	...

$\cdot in$ $\Delta EXCESS_{120} =$

5	0.152
6	0.239
7	0.359
8	0.601
9	0.769
10	0.872
11	0.874
12	0.908
13	0.874
14	0.872
15	0.769
16	...

$\cdot ir$

Lower Bound D at 40 Days $0.5 \cdot D40_{rm} = 1.067 \cdot in$ BDM 5.2.4.C

Upper Bound D at 120 Days $D120_{rm} = 2.282 \cdot in$ BDM 5.2.4.C

Screed Camber "C" $C_{rm} = 1.375 \cdot in$ BDM 5.2.4.C

Check that Final Excess Camber is less than that assumed to estimate the A dimension. A dimension estimate should be revised if necessary.

$chk_{11,1} := if\left(\Delta EXCESS_{120_{rm}} \le A_{Ex}, "OK", "NG"\right) = "OK"$

11.5 Deflections Due to Live Load

LRFD 2.5.2.6

Live Load Deflection Criteria is based upon the following:

1. The vehicular load shall include the dynamic load allowance of LRFD 3.6.2.1 LRFD 2.5.2.6.2
2. The live load deflection should be taken as the larger of (LRFD 3.6.1.3.2):
   - That resulting from the design truck alone, or
   - that resulting from 25% of the design truck taken together with the design lane load
3. The provision of LRFD 3.6.1.1.2 (multiple presence of live load) shall be applied.
4. For straight girder systems, all design lanes should be loaded and all supporting elements should be assumed to deflect equally.
5. For composite design, the stiffness of the design cross-section should include the entire width of the roadway and the structurally continuous portions of the barriers. For simplicity and to be conservative, neglect the barriers.

Live load deflection limit (Vehicular Bridge) $\Delta_{LL.lim} := \frac{L}{800} = 1.950 \cdot in$ LRFD 2.5.2.6.2

Composite Section Properties for Entire Superstructure

Slab transformed flange width $b_{slab.trans} := (BW + 2 \cdot cw) \cdot n = 311.51 \cdot in$

Slab moment of inertia (transformed) $I_{slab2} := b_{slab.trans} \cdot t_s^{\,3} \div 12 = 8904.1 \cdot in^4$

Area of slab (transformed) $A_{slab2} := b_{slab.trans} \cdot t_s = 2180.6 \cdot in^2$

c.g. of slab to bottom of girder $Y_{bs} = 77.500 \cdot in$

c.g. to bottom of girder $Y_{b2} := \frac{A_{slab2} \cdot Y_{bs} + N_b \cdot A_g \cdot Y_{bg}}{A_{slab2} + N_b \cdot A_g} = 47.48 \cdot in$

c.g. to top of girder $Y_{t2} := d_g - Y_{b2} = 26.52 \cdot in$

c.g. to top of slab $Y_{ts2} := t_s + Y_{t2} = 33.52 \cdot in$

Slab moment of inertia about composite N.A. $I_{slabc2} := A_{slab2} \cdot (Y_{ts2} - 0.5t_s)^2 + I_{slab2} = 1974622 \cdot in^4$

Girder moment of inertia about composite N.A. $I_{gc2} := N_b \cdot A_g \cdot (Y_{b2} - Y_{bg})^2 + N_b \cdot I_g = 5179723 \cdot in^4$

Composite section moment of inertia $I_{c2} := I_{slabc2} + I_{gc2} = 7154345 \cdot in^4$

Maximum Live Load Deflection due to Design Truck

The following function finds the maximum deflection due to an AASHTO HL93 Truck Load at a section a distance "x" along a simple span of length "L". A truck moving both directions is checked. LRFD 3.6.1.2.2

$HL93Truck\Delta(x, L) :=$

$Axles \leftarrow \begin{pmatrix} 8kip \\ 32kip \\ 32kip \end{pmatrix}$

$Locations \leftarrow \begin{pmatrix} 0ft \\ -14ft \\ -28ft \end{pmatrix}$

$rows \leftarrow rows(Locations)$

$Loc \leftarrow Locations$

$Deflection \leftarrow 0in$

while $Loc_{rows} \le L$

  for $i \in 1 .. rows$

    $\Delta_i \leftarrow \Delta_{POINT}(Axles_i, Loc_i, x, L, E_c, I_{c2})$

    $Loc_i \leftarrow Loc_i + 0.01ft$

  $Deflection \leftarrow \max\left(\sum \Delta, Deflection\right)$

$Loc \leftarrow Locations$

$x \leftarrow L - x$

while $Loc_{rows} \le L$

  for $i \in 1 .. rows$

    $\Delta_i \leftarrow \Delta_{POINT}(Axles_i, Loc_i, x, L, E_c, I_{c2})$

    $Loc_i \leftarrow Loc_i + 0.01ft$

  $Deflection \leftarrow \max\left(\sum \Delta, Deflection\right)$

$Deflection$

Deflections due to one truck loading on entire superstructure

$$\Delta TRUCK_i := HL93Truck\Delta(SE_i - P2, L)$$

Deflections due to one lane loading on entire superstructure

$$\Delta LANE_i := \Delta_{UNIFORM}(w_{lane}, SE_i - P2, L, E_c, I_{c2})$$

Maximum Superstructure Deflections LRFD 3.6.1.3.2

$$\Delta SUPER_i := N_L \cdot m_p \cdot \max\left[\Delta TRUCK_i \cdot (1 + IM), 0.25 \cdot \Delta TRUCK_i \cdot (1 + IM) + \Delta LANE_i\right]$$

$\Delta TRUCK =$

	1
1	0.000
2	0.000
3	0.003
4	0.009
5	0.015
6	0.025
7	0.040
8	0.077
9	0.106
10	0.125
11	0.125
12	0.132
13	0.125
14	0.125
15	0.106
16	...

$\cdot in$

$\Delta LANE =$

	1
1	0.000
2	0.000
3	0.002
4	0.007
5	0.012
6	0.019
7	0.031
8	0.058
9	0.080
10	0.093
11	0.093
12	0.098
13	0.093
14	0.093
15	0.080
16	...

$\cdot in$

$\Delta SUPER =$

	1
1	0.000
2	0.000
3	0.011
4	0.032
5	0.052
6	0.085
7	0.136
8	0.260
9	0.360
10	0.423
11	0.424
12	0.447
13	0.424
14	0.423
15	0.360
16	...

$\cdot in$

Check LL Deflection Limit

$$chk_{1,2} := if\left(\max(\Delta SUPER) < \Delta_{LL.lim}, "OK", "NG"\right) = "OK"$$

12. Lifting, Shipping, and General Stability

Home

12.1 Lifting Stresses

Dead load bending moment and stress

Impact is not applied during the lifting stage

BDM 5.6.2 C.2.

Dead load moments during lifting $M_{Lift_i} := M_{cant}\left(w_g, L_1, L_1, GL - 2L_1, SE_i\right)$

Dead load stresses at top of girder during lifting $ST_{Lift_i} := -\frac{M_{Lift_i}}{S_{tg}}$

Dead load stresses at bottom of girder during lifting $SB_{Lift_i} := \frac{M_{Lift_i}}{S_{bg}}$

$M_{Lift} =$

	1
1	0.0
2	-2.1
3	-4.8
4	-13.2
5	105.2
6	301.4
7	588.2
8	1214.1
9	1661.2
10	1923.9
11	1929.4
12	2018.8
13	1929.4
14	1923.9
15	1661.2
16	...

·kip·ft

$ST_{Lift} =$

	1
1	0.000
2	0.001
3	0.003
4	0.008
5	-0.066
6	-0.189
7	-0.368
8	-0.761
9	-1.041
10	-1.205
11	-1.209
12	-1.265
13	-1.209
14	-1.205
15	-1.041
16	...

·ksi

$SB_{Lift} =$

	1
1	0.000
2	-0.001
3	-0.003
4	-0.008
5	0.061
6	0.176
7	0.343
8	0.707
9	0.968
10	1.121
11	1.124
12	1.176
13	1.124
14	1.121
15	0.968
16	...

·ksi

Service I for Casting Yard Stage (At Lifting)

Effective Prestress in Permanent Strands $f_{peP.Lift} := f_{pj} + \Delta f_{pR0} + \Delta f_{pES} = 187.5 \cdot ksi$

Effective Prestress in Temporary Strands $f_{peT.Lift} := f_{pj} + \Delta f_{pR0} + \Delta f_{pEST} = 193.8 \cdot ksi$

Stress in girder due to prestressing:

	1 Top Stress	2 Bottom Stress

$$PS_{Lift} := \left| \begin{array}{l} \text{for } i \in 1 .. \text{rows}(SE) \\ \quad P_p \leftarrow f_{peP.Lift} \cdot TRAN_i \cdot A_{ps} \\ \quad P_t \leftarrow f_{peT.Lift} \cdot TRAN_i \cdot A_{temp} \\ \quad PS_{i,1} \leftarrow -\left(\frac{P_p}{A_g} - \frac{P_p \cdot EC_{i,2}}{S_{tg}} + \frac{P_t}{A_g} - \frac{P_t \cdot e_{temp}}{S_{tg}} \right) \\ \quad PS_{i,2} \leftarrow -\left(\frac{P_p}{A_g} + \frac{P_p \cdot EC_{i,2}}{S_{bg}} + \frac{P_t}{A_g} + \frac{P_t \cdot e_{temp}}{S_{bg}} \right) \\ PS \end{array} \right.$$

$PS_{Lift} =$

1	0.000	0.000
2	-0.855	-1.676
3	-1.270	-2.577
4	-1.212	-2.631
5	-1.159	-2.680
6	-1.067	-2.766
7	-0.923	-2.900
8	-0.546	-3.251
9	-0.169	-3.601
10	0.197	-3.942
11	0.197	-3.942
12	0.197	-3.942
13	0.197	-3.942
14	0.197	-3.942
15	-0.169	-3.601
16	-0.546	...

$\cdot ksi$

Find total Service I stress which includes:

- Prestress
- Girder Dead Load between lift points

$$STRESS_{Lift} := \left| \begin{array}{l} \text{for } i \in 1 .. \text{rows}(SE) \\ \quad STR_{i,1} \leftarrow PS_{Lift_{i,1}} + ST_{Lift_i} \\ \quad STR_{i,2} \leftarrow PS_{Lift_{i,2}} + SB_{Lift_i} \\ STR \end{array} \right.$$

$STRESS_{Lift} =$

	Top Stress	Bottom Stress
	1	2
1	0.000	0.000
2	-0.854	-1.678
3	-1.267	-2.579
4	-1.204	-2.638
5	-1.225	-2.619
6	-1.256	-2.590
7	-1.291	-2.557
8	-1.306	-2.543
9	-1.209	-2.633
10	-1.008	-2.821
11	-1.012	-2.817
12	-1.068	-2.765
13	-1.012	-2.817
14	-1.008	-2.821
15	-1.209	-2.633
16	-1.306	...

$\cdot ksi$

Maximum compressive stress allowed: $f_{c.TL.lim} = -4.875 \cdot ksi$

Maximum tensile stress allowed: $f_{t.TL.lim} = 0.520 \cdot ksi$

Check compressive stress $chk_{12,1} := \text{if}\left(\min\left(STRESS_{Lift}\right) \geq f_{c.TL.lim}, \text{"OK"}, \text{"NG"}\right) = \text{"OK"}$

Check tensile stress (with bonded reinforcement) $chk_{12,2} := if\left(max\left(STRESS_{Lift}\right) \le f_{t.TL.lim}, "OK", "NG"\right) = "OK"$

12.2 Girder Stability During Lifting

References

1. PCI Journal Jan/Feb 1989 and Jan/Feb 1993, Lateral Stability of Long Prestressed Concrete Beams Parts 1 and 2, Robert F. Mast
2. PCI Journal Jul/Aug 1998, New Deep WSDOT Standard Sections Extend Spans of Prestressed Concrete Girder Bridges
3. PCI Journal Fall 2009, Design Optimization for Fabrication of Pretensioned Concrete Bridge Girders
4. BDM 5.6.3-C.2

Length of girder between lift points $L_{Lift} := GL - 2L_1 = 123.95\,ft$

Initial eccentricity caused by lift loop placement tolerance $e_{lift} := 0.25in$ — Std. Spec. 6-02.3(25)I, BDM 5.6.3.C.2

Initial eccentricity caused by sweep (horizontal) tolerance at midspan of girder $e_{sweep} := \frac{0.125in}{10ft \cdot 2} \cdot GL = 0.837 \cdot in$ — Std. Spec. 6-02.3(25)J, BDM 5.6.3.C.2

Offset Factor that determines the distance between the roll axis and the c.g. of the arc of a curved girder $F_{oL} := \left(\frac{L_{Lift}}{GL}\right)^2 - \frac{1}{3} = 0.523$

Initial eccentricity of the c.g. from the roll axis $e_i := e_{lift} + e_{sweep} \cdot F_{oL} = 0.688 \cdot in$

Downward deflection due to self weight (midspan). The first term is deflection caused by self weight between lifting supports. The second term is deflection caused by overhangs.

$$\Delta_{self} := -\Delta_{UNIFORM}\left(w_g, SE_{rm} - L_1, L_{Lift}, E_{ci}, I_g\right) + \frac{w_g \cdot {L_1}^2 \cdot {L_{Lift}}^2}{16 \cdot E_{ci} \cdot I_g} = -1.377 \cdot in$$

Deflection due to prestress (midspan)

$$\begin{aligned}\Delta_{ps} := {} & Straight\Delta\left(f_{peP1} \cdot N_s \cdot A_p, -e_s, E_{ci}, I_g, SE_{rm}, GL\right) \ldots \\ & + Straight\Delta\left(f_{peT1} \cdot N_t \cdot A_p, -e_{temp}, E_{ci}, I_g, SE_{rm}, GL\right) \ldots \\ & + Harp\Delta\left(f_{peP1} \cdot N_h \cdot A_p, -EC_{rm,1}, -EC_{1,1}, E_{ci}, I_g, SE_{rm}, GL, x_h\right)\end{aligned} = 2.769 \cdot in$$

Vertical distance from the roll center to the c.g. $y_r := Y_{tg} - \left(\Delta_{self} + \Delta_{ps}\right) \cdot F_{oL} = 37.612 \cdot in$

Initial roll angle of a rigid beam $\theta_i := \frac{e_i}{y_r} = 0.018 \cdot rad$

Theoretical deflection at the girder c.g. assuming full weight is applied about the weak axis $z_o := \frac{w_g}{12 \cdot E_{ci} \cdot I_y \cdot GL} \cdot \left(\frac{1}{10} \cdot {L_{Lift}}^5 - {L_1}^2 \cdot {L_{Lift}}^3 + 3 \cdot {L_1}^4 \cdot L_{Lift} + \frac{6}{5} \cdot {L_1}^5\right)$

$$z_o = 8.243 \cdot in$$

Lateral bending moment to cause cracking in corner of top or bottom flange from biaxial bending $M_{lat_i} := \min\left[\left(f_{rL} - STRESS_{Lift_{i,1}}\right) \cdot \frac{2I_y}{b_f}, \left(f_{rL} - STRESS_{Lift_{i,2}}\right) \cdot \frac{2I_y}{b_{f.bot}}\right]$

Tilt angle at cracking

$$\theta_{max_i} := \begin{cases} \text{return } \min\left(\left|\frac{M_{lat_{rl_1}}}{M_{Lift_{rl_1}}}\right|, \frac{\pi}{2}\right) & \text{if } SE_i \le SE_{rl_1} \\ \text{return } \min\left(\frac{M_{lat_i}}{M_{Lift_i}}, \frac{\pi}{2}\right) & \text{if } SE_{rl_1} < SE_i < SE_{rl_2} \\ \text{return } \min\left(\left|\frac{M_{lat_{rl_2}}}{M_{Lift_{rl_2}}}\right|, \frac{\pi}{2}\right) & \text{if } SE_i \ge SE_{rl_2} \end{cases}$$

Factor of Safety against cracking during lifting

$$FS_{cr.l_i} := \left(\frac{z_o}{y_r} + \frac{\theta_i}{\theta_{max_i}}\right)^{-1}$$

$M_{lat} =$ ·kip·ft

	1
1	161.0
2	370.1
3	471.5
4	455.9
5	461.1
6	468.7
7	477.4
8	481.0
9	457.2
10	407.9
11	408.8
12	422.5
13	408.8
14	407.9
15	457.2
16	...

$\theta_{max} =$ ·rad

	1
1	1.5708
2	1.5708
3	1.5708
4	1.5708
5	1.5708
6	1.5549
7	0.8116
8	0.3962
9	0.2752
10	0.2120
11	0.2119
12	0.2093
13	0.2119
14	0.2120
15	0.2752
16	...

$FS_{cr.l} =$

	1
1	4.333
2	4.333
3	4.333
4	4.333
5	4.333
6	4.331
7	4.138
8	3.769
9	3.502
10	3.274
11	3.274
12	3.262
13	3.274
14	3.274
15	3.502
16	...

Check if minimum FS against cracking is greater than 1.0

$$chk_{12,3} := \text{if}\left(\min\left(FS_{cr.l}\right) \ge 1.0, \text{"OK"}, \text{"NG"}\right) = \text{"OK"}$$

Tilt angle at which the maximum FS against failure occurs

$$\theta'_{max} := \sqrt{\frac{e_i}{2.5 \cdot z_o}} = 0.1827 \cdot \text{rad}$$

Effective theoretical deflection

$$z'_o := z_o \cdot \left(1 + 2.5 \cdot \theta'_{max}\right) = 12.008 \cdot \text{in}$$

Maximum Factor of Safety against failure

$$FS_f := \frac{y_r \cdot \theta'_{max}}{z'_o \cdot \theta'_{max} + e_i} = 2.385$$

If Maximum FS against failure is less than the minimum FS against cracking, then set it equal to

$$FS_f := \max\left(\min\left(FS_{cr.l}\right), FS_f\right) = 3.262$$

the minimum FS against cracking

Check lifting $chk_{12,4} := \text{if}\left(FS_f \geq 1.5, \text{"OK"}, \text{"NG"}\right) = \text{"OK"}$

12.3 Shipping Weight and Stresses

Girder weight limit for truck shipping

Total weight $W_g := w_g \cdot GL = 141.7 \cdot kip$

Check allowable shipping weight (BDM 5.6.3 D.3) $chk_{12,5} := \text{if}\left(W_g \leq 240kip, \text{"OK"}, \text{"NG"}\right) = \text{"OK"}$

Dead load bending moment and stress

Length of girder between shipping points $L_S := GL - L_L - L_T = 113.95\,ft$

Dead load moments during shipping $M_{Ship_i} := M_{cant}\left(w_g, L_L, L_T, L_S, SE_i\right)$

Dead load stresses at top of girder during shipping $ST_{Ship_i} := -\frac{M_{Ship_i}}{S_{tg}}$

Dead load stresses at bottom of girder during shipping $SB_{Ship_i} := \frac{M_{Ship_i}}{S_{bg}}$

$M_{Ship} =$

	1
1	0.0
2	-2.1
3	-4.8
4	-13.2
5	-24.7
6	-52.9
7	233.8
8	859.7
9	1306.8
10	1569.5
11	1575.1
12	1664.5
13	1575.1
14	1569.5
15	1306.8
16	...

$\cdot kip \cdot ft$

$ST_{Ship} =$

	1
1	0.000
2	0.001
3	0.003
4	0.008
5	0.015
6	0.033
7	-0.146
8	-0.539
9	-0.819
10	-0.983
11	-0.987
12	-1.043
13	-0.987
14	-0.983
15	-0.819
16	...

$\cdot ksi$

$SB_{Ship} =$

	1
1	0.000
2	-0.001
3	-0.003
4	-0.008
5	-0.014
6	-0.031
7	0.136
8	0.501
9	0.761
10	0.915
11	0.918
12	0.970
13	0.918
14	0.915
15	0.761
16	...

$\cdot ksi$

Prestressing Stresses

Effective Prestress in Permanent Strands $f_{peP.Ship} := f_{pj} + \Delta f_{pR0} + \Delta f_{pES} + \Delta f_{pLTH} = 182.2 \cdot ksi$

Effective Prestress in Temporary Strands $f_{peT.Ship} := f_{pj} + \Delta f_{pR0} + \Delta f_{pEST} + \Delta f_{pLTH} = 188.5 \cdot ksi$

Stress in girder due to prestressing:

$$PS_{Ship} := \left| \begin{array}{l} \text{for } i \in 1 .. \text{rows}(SE) \\ \quad P_p \leftarrow f_{peP.Ship} \cdot TRAN_i \cdot A_{ps} \\ \quad P_t \leftarrow f_{peT.Ship} \cdot TRAN_i \cdot A_{temp} \\ \quad PS_{i,1} \leftarrow -\left(\frac{P_p}{A_g} - \frac{P_p \cdot EC_{i,2}}{S_{tg}} + \frac{P_t}{A_g} - \frac{P_t \cdot e_{temp}}{S_{tg}} \right) \\ \quad PS_{i,2} \leftarrow -\left(\frac{P_p}{A_g} + \frac{P_p \cdot EC_{i,2}}{S_{bg}} + \frac{P_t}{A_g} + \frac{P_t \cdot e_{temp}}{S_{bg}} \right) \\ PS \end{array} \right.$$

$PS_{Ship} =$ ·ksi

	Top Stress 1	Bottom Stress 2
1	0.000	0.000
2	-0.831	-1.629
3	-1.235	-2.504
4	-1.179	-2.556
5	-1.127	-2.604
6	-1.038	-2.687
7	-0.898	-2.818
8	-0.531	-3.159
9	-0.164	-3.500
10	0.191	-3.830
11	0.191	-3.830
12	0.191	-3.830
13	0.191	-3.830
14	0.191	-3.830
15	-0.164	-3.500
16	-0.531	...

Service I for Shipping - Plumb Girder with Impact

Find total Service I stress which includes:

- Prestress
- Girder Dead Load between bunk points including impact up or down

Impact during the shipping stage which shall be applied either up or down $IM_{SH} := 20\%$ BDM 5.6.2 C.2.

$$STRESS_{Ship1} := \left| \begin{array}{l} \text{for } i \in 1..\text{rows}(SE) \\ \quad STR_{i,1} \leftarrow PS_{Ship_{i,1}} + ST_{Ship_i} \cdot (1 - IM_{SH}) \\ \quad STR_{i,2} \leftarrow PS_{Ship_{i,1}} + ST_{Ship_i} \\ \quad STR_{i,3} \leftarrow PS_{Ship_{i,1}} + ST_{Ship_i} \cdot (1 + IM_{SH}) \\ \quad STR_{i,4} \leftarrow PS_{Ship_{i,2}} + SB_{Ship_i} \cdot (1 - IM_{SH}) \\ \quad STR_{i,5} \leftarrow PS_{Ship_{i,2}} + SB_{Ship_i} \\ \quad STR_{i,6} \leftarrow PS_{Ship_{i,2}} + SB_{Ship_i} \cdot (1 + IM_{SH}) \\ STR \end{array} \right.$$

$STRESS_{Ship1} =$

	Top Stress - IM	Top Stress	Top Stress + IM	Bottom Stress - IM	Bottom Stress	Bottom Stress + IM
	1	2	3	4	5	6
1	0.000	0.000	0.000	0.000	0.000	0.000
2	-0.830	-0.830	-0.830	-1.630	-1.630	-1.630
3	-1.233	-1.232	-1.232	-2.506	-2.507	-2.507
4	-1.172	-1.171	-1.169	-2.563	-2.564	-2.566
5	-1.115	-1.112	-1.109	-2.616	-2.619	-2.622
6	-1.011	-1.005	-0.998	-2.712	-2.718	-2.724
7	-1.015	-1.044	-1.073	-2.709	-2.682	-2.654
8	-0.962	-1.070	-1.177	-2.758	-2.658	-2.558
9	-0.819	-0.983	-1.147	-2.891	-2.738	-2.586
10	-0.596	-0.792	-0.989	-3.099	-2.916	-2.733
11	-0.598	-0.796	-0.993	-3.096	-2.913	-2.729
12	-0.643	-0.852	-1.060	-3.055	-2.861	-2.667
13	-0.598	-0.796	-0.993	-3.096	-2.913	-2.729
14	-0.596	-0.792	-0.989	-3.099	-2.916	-2.733
15	-0.819	-0.983	-1.147	-2.891	-2.738	-2.586
16	-0.962	-1.070	-1.177	-2.758	-2.658	...

$\cdot ksi$

Maximum compressive stress allowed: $f_{c.SH.lim} = -5.525 \cdot ksi$

Maximum tensile stress allowed: $f_{t.SP.lim} = 0.554 \cdot ksi$

Check compressive stress $chk_{12,6} := \text{if}\left(\min\left(STRESS_{Ship1}\right) \geq f_{c.SH.lim}, \text{"OK"}, \text{"NG"}\right) = \text{"OK"}$

Check tensile stress (with bonded reinforcement) $chk_{12,7} := \text{if}\left(\max\left(STRESS_{Ship1}\right) \leq f_{t.SP.lim}, \text{"OK"}, \text{"NG"}\right) = \text{"OK"}$

Service I for Shipping - Girder on Superelevation without Impact

BDM 5.6.3 D.6

References

1. PCI Journal Jan/Feb 1989 and Jan/Feb 1993, Lateral Stability of Long Prestressed Concrete Beams Parts 1 and 2, Robert F. Mast
2. PCI Journal Jul/Aug 1998, New Deep WSDOT Standard Sections Extend Spans of Prestressed Concrete Girder Bridges
3. PCI Journal Fall 2009, Design Optimization for Fabrication of Pretensioned Concrete Bridge Girders
4. BDM 5.6.3-C.2

Maximum expected roadway superelevation

$$se := 6\%$$

Superelevation angle

$$\alpha := \operatorname{atan}(se) = 0.0599 \cdot rad$$

$$\alpha = 3.434 \cdot deg$$

Rotational Stiffness of Support

$$K_\theta := \max\left(28000\,\frac{kip \cdot in}{rad}, 4000\,\frac{kip \cdot in}{rad} \cdot \operatorname{ceil}\left(\frac{W_g}{18kip}\right)\right) = 32000 \cdot \frac{kip \cdot in}{rad}$$

Height at which beam weight W_g could be placed to cause neutral equilibrium

$$r := \frac{K_\theta}{W_g} = 225.77 \cdot in$$

Initial eccentricity caused by shipping support placement tolerance

$$e_{ship} := 1in$$

Std. Spec. 6-02.3(25)I
BDM 5.6.3.D.6

Initial eccentricity caused by sweep (horizontal) tolerance at midspan of girder

$$e_{s.ship} := \frac{0.125in}{10ft} \cdot GL = 1.674 \cdot in$$

Std. Spec. 6-02.3(25)J
BDM 5.6.3.D.6

Offset Factor that determines the distance between the roll axis and the c.g. of the arc of a curved girder

$$F_{oLship} := \left(\frac{L_S}{GL}\right)^2 - \frac{1}{3} = 0.390$$

Initial eccentricity of the c.g. from the roll axis

$$e_{i.ship} := e_{ship} + e_{s.ship} \cdot F_{oLship} = 1.654 \cdot in$$

Height of roll center over roadway

$$h_r := 24in$$

Horizontal distance from roll center to center of tire support

$$z_{max} := \frac{72in}{2} = 36.0 \cdot in$$

Distance from the roll center to the c.g. of girder along roll axis (add 2% for camber)

$$y := \left(Y_{bg} + 72in - h_r\right) \cdot 1.02 = 85.333 \cdot in$$

Theoretical deflection at the girder c.g. assuming full weight is applied about the weak axis. Equation for z_o derived for unequal overhangs.

$$z_{o.ship} := -\frac{w_g}{24 \cdot E_c \cdot I_y \cdot GL} \cdot \left(\frac{-6 \cdot L_L^{\,5}}{5} - 2L_L^{\,4} \cdot L_S + L_L^{\,2} \cdot L_S^{\,3} - 2 \cdot L_L^{\,2} \cdot L_S \cdot L_T^{\,2} + L_S^{\,3} \cdot L_T^{\,2} - \frac{L_S^{\,5}}{5} - 2 \cdot L_S \cdot L_T^{\,4} - \frac{6 \cdot L_T^{\,5}}{5}\right)$$

$$z_{o.ship} = 4.779 \cdot in$$

Equilibrium Tilt Angle

$$\theta_{eq} := \frac{\alpha \cdot r + e_{i.ship}}{r - y - z_{o.ship}} = 0.1119 \cdot rad$$

Lateral bending moment during shipping for inclined girder on superelevation

$$M_{latINCL_i} := M_{Ship_i} \cdot \theta_{eq}$$

Find total Service I stress which includes:
- Prestress
- Girder Dead Load between bunk points in biaxial bending due to superelevation

$$STRESS_{Ship2} := \left| \begin{array}{l} \text{for } i \in 1..\text{rows}(SE) \\ \quad STR_{i,1} \leftarrow PS_{Ship_{i,1}} + ST_{Ship_i} - M_{latINCL_i} \cdot \frac{b_f}{2I_y} \\ \quad STR_{i,2} \leftarrow PS_{Ship_{i,1}} + ST_{Ship_i} + M_{latINCL_i} \cdot \frac{b_f}{2I_y} \\ \quad STR_{i,3} \leftarrow PS_{Ship_{i,2}} + SB_{Ship_i} - M_{latINCL_i} \cdot \frac{b_{f.bot}}{2I_y} \\ \quad STR_{i,4} \leftarrow PS_{Ship_{i,2}} + SB_{Ship_i} + M_{latINCL_i} \cdot \frac{b_{f.bot}}{2I_y} \\ STR \end{array} \right.$$

$M_{latINCL} =$

	1
1	0.0
2	-0.2
3	-0.5
4	-1.5
5	-2.8
6	-5.9
7	26.2
8	96.2
9	146.3
10	175.7
11	176.3
12	186.3
13	176.3
14	175.7
15	146.3
16	...

$\cdot kip \cdot ft$

$STRESS_{Ship2} =$

	Top Stress Uphill Corner	Top Stress Downhill Corner	Bottom Stress Uphill Corner	Bottom Stress Downhill Corner
	1	2	3	4
1	0.000	0.000	0.000	0.000
2	-0.829	-0.831	-1.629	-1.631
3	-1.230	-1.234	-2.505	-2.508
4	-1.165	-1.177	-2.559	-2.569
5	-1.100	-1.123	-2.610	-2.628
6	-0.981	-1.029	-2.699	-2.737
7	-1.151	-0.937	-2.765	-2.598
8	-1.462	-0.677	-2.966	-2.350
9	-1.580	-0.386	-3.206	-2.271
10	-1.509	-0.075	-3.478	-2.354
11	-1.515	-0.076	-3.476	-2.349
12	-1.612	-0.091	-3.456	-2.265
13	-1.515	-0.076	-3.476	-2.349
14	-1.509	-0.075	-3.478	-2.354
15	-1.580	-0.386	-3.206	-2.271
16	-1.462	-0.677	-2.966	...

$\cdot l$

Maximum compressive stress allowed: $f_{c.SH.lim} = -5.525 \cdot ksi$

Maximum tensile stress allowed: $f_{t.SI.lim} = 0.700 \cdot ksi$

Check compressive stress $chk_{12,8} := \text{if}\left(\min\left(STRESS_{Ship2}\right) \geq f_{c.SH.lim}, \text{"OK"}, \text{"NG"}\right) = \text{"OK"}$

Check tensile stress (with bonded reinforcement) $chk_{12,9} := \text{if}\left(\max\left(STRESS_{Ship2}\right) \leq f_{t.SI.lim}, \text{"OK"}, \text{"NG"}\right) = \text{"OK"}$

12.4 Girder Stability During Shipping

Lateral bending moment to cause cracking in corner of top or bottom flange from biaxial bending

$$M_{latSh_i} := \min\left[\left(f_r - STRESS_{Ship1_{i,2}}\right)\cdot\frac{2I_y}{b_f}, \left(f_r - STRESS_{Ship1_{i,5}}\right)\cdot\frac{2I_y}{b_{f.bot}}\right]$$

Tilt angle at cracking

$$\theta_{maxSh_i} := \begin{cases} \text{return } \min\left(\left|\frac{M_{latSh_{rb_L}}}{M_{Ship_{rb_L}}}\right|, \frac{\pi}{2}\right) & \text{if } SE_i \le SE_{rb_L} \\ \text{return } \min\left(\frac{M_{latSh_i}}{M_{Ship_i}}, \frac{\pi}{2}\right) & \text{if } SE_{rb_L} < SE_i < SE_{rb_R} \\ \text{return } \min\left(\left|\frac{M_{latSh_{rb_R}}}{M_{Ship_{rb_R}}}\right|, \frac{\pi}{2}\right) & \text{if } SE_i \ge SE_{rb_R} \end{cases}$$

Factor of Safety against cracking during lifting

$$FS_{cr.2_i} := \frac{r\cdot\left(\theta_{maxSh_i} - \alpha\right)}{z_{o.ship}\cdot\theta_{maxSh_i} + e_{i.ship} + y\cdot\theta_{maxSh_i}}$$

$M_{latSh} =$

	1
1	171.4
2	374.8
3	473.3
4	458.2
5	443.7
6	417.5
7	427.2
8	433.4
9	412.2
10	365.5
11	366.3
12	380.1
13	366.3
14	365.5
15	412.2
16	...

·kip·ft

$\theta_{maxSh} =$

	1
1	1.5708
2	1.5708
3	1.5708
4	1.5708
5	1.5708
6	1.5708
7	1.5708
8	0.5041
9	0.3155
10	0.2329
11	0.2326
12	0.2283
13	0.2326
14	0.2329
15	0.3155
16	...

·rad

$FS_{cr.2} =$

	1
1	2.382
2	2.382
3	2.382
4	2.382
5	2.382
6	2.382
7	2.382
8	2.130
9	1.918
10	1.725
11	1.724
12	1.710
13	1.724
14	1.725
15	1.918
16	...

Check if minimum FS against cracking is greater than 1.0

$$chk_{12,10} := \text{if}\left(\min\left(FS_{cr.2}\right) \ge 1.0, \text{"OK"}, \text{"NG"}\right) = \text{"OK"}$$

Tilt angle at which the maximum FS against rollover occurs

$$\theta'_{maxS} := \frac{z_{max} - h_r\cdot\alpha}{r} + \alpha = 0.2130\cdot\text{rad}$$

Effective theoretical deflection

$$z'_{oS} := z_{o.ship}\cdot\left(1 + 2.5\cdot\theta'_{maxS}\right) = 7.325\cdot\text{in}$$

Maximum Factor of Safety against rollover

$$FS_{fS} := \frac{r\cdot\left(\theta'_{maxS} - \alpha\right)}{z'_{oS}\cdot\theta'_{maxS} + e_{i.ship} + y\cdot\theta'_{maxS}} = 1.616$$

Check FS against rollover

$$chk_{12,11} := \text{if}\left(FS_{fS} \geq 1.5, \text{"OK"}, \text{"NG"}\right) = \text{"OK"}$$

13. Check Results

Home

Row # indicates Section of each check and Column # indicates the check number within that Section.

chk =

	1	2	3	4	5	6	7	8	9	10	11
1	0	0	0	0	0	0	0	0	0	0	0
2	0	0	0	0	0	0	0	0	0	0	0
3	"OK"	"OK"	"OK"	0	0	0	0	0	0	0	0
4	0	0	0	0	0	0	0	0	0	0	0
5	"OK"	"OK"	"OK"	"OK"	"OK"	"OK"	"OK"	"OK"	"OK"	"OK"	"OK"
6	0	0	0	0	0	0	0	0	0	0	0
7	"OK"	"OK"	"OK"	"OK"	"OK"	0	0	0	0	0	0
8	"OK"	"OK"	"OK"	"OK"	"OK"	"OK"	"OK"	"OK"	"OK"	"OK"	"OK"
9	"OK"	"OK"	"OK"	0	0	0	0	0	0	0	0
10	"OK"	"OK"	"OK"	"OK"	"OK"	"OK"	"OK"	"OK"	"OK"	"OK"	0
11	"OK"	"OK"	0	0	0	0	0	0	0	0	0
12	"OK"	"OK"	"OK"	"OK"	"OK"	"OK"	"OK"	"OK"	"OK"	"OK"	"OK"

Check for NG entries. If zero, all checks are satisfied.

$$Number_{NG} := \left| \begin{array}{l} \text{for } i \in 1 .. rows(chk) \\ \quad \text{for } j \in 1 .. cols(chk) \\ \quad\quad Num \leftarrow Num + 1 \text{ if } chk_{i,j} = \text{"NG"} \\ Num \end{array} \right. = 0.0$$

1 Structure

Design span $L := 120 \cdot ft$

Roadway width $BW := 43 \cdot ft$ barrier face to barrier face

Girder spacing $S := 9 \cdot ft$

Skew angle $\theta := 0 \cdot deg$

No. of girder $N_b := 5$

Curb width on deck, $cw := 10.5 \cdot in$

Deck overhang (centerline of exterior girder to end of deck) $overhang := \frac{BW - (N_b - 1) \cdot S}{2} + cw$ $overhang = 4.375\ ft$

Future overlay (2" HMA), $w_{hma} := 0.140kcf \cdot 2in$ $w_{hma} = 0.023 \frac{kip}{ft^2}$

2 Criteria and assumptions

2.1 Design Live Load for Decks

(§3.6.1.3.3, not for empirical design method) Where deck is designed using the approximate strip method, specified in §4.6.2.1, the live load shall be taken as the wheel load of the 32.0 kip axle of the design truck, without lane load, where the strips are transverse.

$if(S \le 15 \cdot ft, "OK", "NG") = "OK"$ (§3.6.1.3.3)

The design truck or tandem shall be positioned transversely such that the center of any wheel load is not closer than (§3.6.1.3.1)

for the design of the deck overhang - 1 ft from the face of the curb or railing , and

for the design of all other components - 2 ft from the edge of the design lane.

(§3.6.1.3.4) For deck overhang design with a cantilever, not exceeding 6.0 ft from the centerline of the exterior girder to the face of a continuous concrete railing, the wheel loads may be replaced with a uniformly distributed line load of 1.0 klf intensity, located 1 ft from the face of the railing.

$if(overhang - cw \le 6 \cdot ft, "OK", "NG") = "OK"$

Horizontal loads on the overhang resulting from vehicle collision with barriers shall be considered in accordance with the yield line analysis.

2.2 Dynamic Load Allowance (impact)

$IM := 0.33$ (§3.6.2.1)

2.3 Minimum Depth and Cover (§9.7.1)

slab design thickness $t_{s1} := 7 \cdot in$

for D.L. calculation $t_{s2} := 7.5 \cdot in$

min. depth $if(t_{s1} \ge 7.0 \cdot in, "OK", "NG") = "OK"$

top concrete cover = 1.5 in. (up to #11 bar) (§5.12.4 & Table 5.12.3-1)
use 2.5 in. (Office Practice)
bottom concrete cover = 1 in. (up to #11 bar)
sacrificial thickness = 0.5 in. (§2.5.2.4)

2.4 Skew Deck (§9.7.1.3 and BDM §5.7.2)

The primary reinforcement shall be placed perpendicular to the main supporting components.

3 Material Properties

3.1 Concrete

$f'_c := 4 \cdot ksi$ Use **CLASS 4000D** for bridge concrete deck (BDM 5.1.1)

$f_{r2} := 0.37 \cdot \sqrt{\frac{f'_c}{ksi}} \cdot ksi$ $f_{r2} = 0.74\,ksi$ (§5.4.2.6) for use in §5.7.3.3.2

$w_c := 0.160 \cdot kcf$

$E_c := 33000 \cdot \left(\frac{w_c}{kcf}\right)^{1.5} \cdot \sqrt{\frac{f'_c}{ksi}} \cdot ksi$ $E_c = 4224.0\,ksi$ (§5.4.2.4)

3.2 Reinforcing Steel (§5.4.3)

$f_y := 60 \cdot ksi$ $E_s := 29000 \cdot ksi$

4 Methods of Analysis

Concrete deck slabs may be analyzed by using

Approximate elastic methods of analysis, or
Refined methods of analysis, or
Empirical design.

Per office practice, concrete deck slab shall be designed and detailed for both empirical and traditional design methods.

5 Empirical Design (§9.7.2)

5.1 Limit States (§9.5.1)

For other than the deck overhang, where empirical design is used, a concrete deck maybe assumed to satisfy service, fatigue and fracture and strength limit states requirements.

Empirical design shall not be applied to overhangs (§9.7.2.2).

5.2 Design Conditions (§9.7.2.4)

For the purpose of empirical design method, the effective length S_{eff} shall be taken as (§9.7.2.3),

web thickness $b_w := 6.125 \cdot in$

top flange width $b_f := 49 \cdot in$

$S_{eff} := S - b_f + \frac{b_f - b_w}{2}$ $S_{eff} = 6.7\,ft$

The design depth of the slab shall exclude the loss that is expected to occur as a result of grinding, grooving, or wear.

$if\left(18.0 \geq \frac{S_{eff}}{t_{s1}} \geq 6.0, "OK", "NG"\right) = "OK"$ $\frac{S_{eff}}{t_{s1}} = 11.491$

core depth $if\left(t_{s2} - 2.5 \cdot in - 1 \cdot in \geq 4 \cdot in, "OK", "NG"\right) = "OK"$

$if\left(S_{eff} \leq 13.5 \cdot ft, "OK", "NG"\right) = "OK"$

$if\left(t_{s1} \geq 7in, "OK", "NG"\right) = "OK"$

$if\left(overhang \geq 3 \cdot t_{s1}, "OK", "NG"\right) = "OK"$ $overhang = 52.5\,in$ $3 \cdot t_{s1} = 21\,in$

a structurally continuous concrete barrier is made composite with the overhang,

$if\left(f'_c \geq 4 \cdot ksi, "OK", "NG"\right) = "OK"$

The deck is made composite with the supporting structural components.

Composite construction **for steel girder (N/A)**

A minimum of two shear connectors at 2 ft centers shall be provided in the M- region of continuous steel superstructures.

5.3 Optional deflection criteria for span-to-depth ratio (LRFD Table 2.5.2.6.3.1)

For slabs with main reinforcement parallel to traffic (however, the criteria is used per Office Practice)

Min. Depth (continuous span) where (slab span length):

$S_{eff} = 6.703\,ft$

$if\left[\max\left(\left(\frac{S_{eff} + 10 \cdot ft}{30}\right)\right) \leq t_{s2}, "OK", "NG"\right] = "OK"$ $\max\left(\left(\frac{S_{eff} + 10 \cdot ft}{30}\right)\right) = 6.7\,in$

5.4 Reinforcement Requirement (§9.7.2.5)

Four layers of reinforcement is required in empirically designed slabs.

The amount of deck reinforcement shall be (§C9.7.2.5)

0.27 in^2/ft for each bottom layer (0.3% of the gross area of 7.5 in. slab)

0.18 in^2/ft for each top layer (0.2% of the gross area)

Try #5 @ 14 in. for bottom longitudinal and transverse, $0.31 \cdot in^2 \cdot \frac{1 \cdot ft}{14 \cdot in} = 0.27\,in^2$ per ft

#4 @ 12 in. for top longitudinal and transverse. $0.2 \cdot in^2 \cdot \frac{1 \cdot ft}{12 \cdot in} = 0.2\,in^2$ per ft

Spacing of steel shall not exceed 18 in.

$\text{if}(\theta \geq 25 \cdot deg, \text{"OK"}, \text{"NG"}) = \text{"NG"}$ if OK, double the specified reinforcement in the end zones, taken as a longitudinal distance equal to S_{eff}.

6 Traditional Design

6.1 Design Assumptions for Approx. Method of Analysis (§4.6.2)

Deck shall be subdivided into strips perpendicular to the supporting components (§4.6.2.1.1).
Continuous beam with span length as center to center of supporting elements (§4.6.2.1.6).
Wheel load may be modeled as concentrated load or load based on tire contact area.
Strips should be analyzed by classical beam theory.

6.2 Width of Equivalent Interior Strip (§4.6.2.1.3)

Strip width calculations are not needed since live load moments from Table A4-1 are used.

Spacing in secondary direction (spacing between diaphragms):

$L_d := \frac{L}{4}$ $L_d = 30.0\ ft$

Spacing in primary direction (spacing between girders):

$S = 9\ ft$

Since $\text{if}\left(\frac{L_d}{S} \geq 1.50, \text{"OK"}, \text{"NG"}\right) = \text{"OK"}$, where $\frac{L_d}{S} = 3.33$ (§4.6.2.1.5)

Therefore, all the wheel load shall be applied to primary strip. Otherwise, the wheels shall be distributed between intersecting strips based on the stiffness ratio of the strip to sum of the strip stiffnesses of intersecting strips.

6.3 Limit States (§5.5.1)

Where traditional design based on flexure is used, the requirements for strength and service limit states shall be satisfied.
Extreme event limit state shall apply for the force effect transmitted from the bridge railing to bridge deck (§13.6.2).
Fatigue need not be investigated for concrete deck slabs in multi-girder applications (§5.5.3.1).

6.4 Strength Limit States

Resistance factors (§5.5.4.2.1)

$\phi_f := 0.90$ for flexure and tension of reinforced concrete

$\phi_v := 0.90$ for shear and torsion

Load Modifier

$\eta_D := 1.00$ for conventional design (§1.3.3)

$\eta_R := 1.00$ for conventional level of redundancy (§1.3.4)

$\eta_I := 1.00$ for typical bridges (§1.3.5)

$\eta := \max\left(\begin{pmatrix} \eta_D \cdot \eta_R \cdot \eta_I \\ 0.95 \end{pmatrix}\right)$ $\eta = 1$ (§1.3.2)

Strength I load combination - normal vehicular load without wind (§3.4.1)

Load factors (LRFD Table 3.4.1-1&2):

$\gamma_{dc} := 1.25$ for component and attachments

$\gamma_{dw} := 1.50$ for wearing surface and utilities (max.)

$\gamma_L := 1.75$ for LL

Multiple presence factor (§3.6.1.1.2):

$M_1 := 1.20$ 1 truck

$M_2 := 1.00$ 2 trucks

$M_3 := 0.85$ 3 trucks (Note; 3 trucks never control for girder spacings up to 15.5 ft, per training notes)

6.4.1 Moment Force Effects Per Strip (§4.6.2.1.6)

The design section for negative moments and shear forces may be taken as follows:

Prestressed girder - shall be at 1/3 of flange width < 15 in.

Steel girder - 1/4 of flange width from the centerline of support.

Concrete box beams - at the face of the web.

web thickness $b_w = 6.13\,in$

top flange width $b_f = 49\,in$

Design critical section for negative moment and shear shall be at d_c, (§4.6.2.1.6)

$d_c := \min\left(\begin{pmatrix} \frac{b_f}{3} \\ 15 \cdot in \end{pmatrix}\right)$ $d_c = 15\,in$ from CL of girder (may be too conservative, see training notes)

Maximum factored moments **per unit width** based on Table A4-1: for $S = 9\ ft$

(include multiple presence factors and the dynamic load allowance)

applicability $\text{if}[\min((0.625 \cdot S \quad 6 \cdot ft)) \geq \text{overhang} - cw, \text{"OK"}, \text{"NG"}] = \text{"OK"}$

$\text{if}\left(N_b \geq 3, \text{"OK"}, \text{"NG="}\right) = \text{"OK"}$

$M_{LLp} := 6.29 \cdot \frac{kip \cdot ft}{ft}$

$M_{LLn} := 3.51 \cdot \frac{kip \cdot ft}{ft}$ (max. -M at d_c from CL of girder)

Dead load moments

$M_{DCp} := \frac{t_{s2} \cdot w_c \cdot S^2}{10}$ $M_{DCp} = 0.81 \frac{kip \cdot ft}{ft}$ (max. $+M_{DC}$)

$M_{DWp} := \frac{w_{hma} \cdot S^2}{10}$ $M_{DWp} = 0.189 \frac{kip \cdot ft}{ft}$ (max. $+M_{Dw}$)

$M_{DCn} := M_{DCp}$ $M_{DCn} = 0.81 \frac{kip \cdot ft}{ft}$ (max. $-M_{DC}$ at d_c at interior girder)

$M_{DWn} := M_{DWp}$ $M_{DWn} = 0.189 \frac{kip \cdot ft}{ft}$ (max. $-M_{Dw}$ at d_c at interior girder)

Factored positive moment per ft

$M_{up} := \eta \cdot (\gamma_{dc} \cdot M_{DCp} + \gamma_{dw} \cdot M_{DWp} + \gamma_L \cdot M_{LLp})$ $M_{up} = 12.3 \frac{kip \cdot ft}{ft}$

Factored negative moment

$M_{un} := \eta \cdot (\gamma_{dc} \cdot M_{DCn} + \gamma_{dw} \cdot M_{DWn} + \gamma_L \cdot M_{LLn})$ $M_{un} = 7.44 \frac{kip \cdot ft}{ft}$

6.4.2 Flexural Resistance

Normal flexural resistance of a rectangular section may be determined by using equations for a flanged section in which case b_w shall be taken as b (§5.7.3.2.3).

$\beta_1 := if\left[f'_c \le 4 \cdot ksi, 0.85, 0.85 - 0.05 \cdot \left(\frac{f'_c - 4.0 \cdot ksi}{1.0 \cdot ksi}\right)\right]$ $\beta_1 := \begin{cases} \beta_1 & \text{if } \beta_1 \ge 0.65 \\ 0.65 & \text{otherwise} \end{cases}$

$\beta_1 = 0.85$ (§5.7.2.2)

6.4.3 Design for Positive Moment Region

assume bar # $bar_p := 5$

$dia(bar) := \begin{cases} 0.5 \cdot in & \text{if } bar = 4 \\ 0.625 \cdot in & \text{if } bar = 5 \\ 0.75 \cdot in & \text{if } bar = 6 \end{cases}$

$d_p := t_{s1} - 1 \cdot in - \frac{dia(bar_p)}{2}$ $d_p = 5.7\,in$

$A_s := \frac{0.85 \cdot f'_c \cdot ft}{f_y} \cdot \left(d_p - \sqrt{d_p^2 - \frac{2 \cdot M_{up} \cdot ft}{0.85 \cdot \phi_f \cdot f'_c \cdot ft}}\right)$ $A_s = 0.52\,in^2$ per ft

use (bottom-transverse) # $bar_p = 5$ $s_p := 7.5 \cdot in$ (max. spa. 12 in. per BDM memo)

$$A_b(bar) := \begin{cases} 0.20\cdot in^2 & \text{if } bar = 4 \\ 0.31\cdot in^2 & \text{if } bar = 5 \\ 0.44\cdot in^2 & \text{if } bar = 6 \end{cases}$$

$A_{sp} := A_b(bar_p)\cdot\frac{1\cdot ft}{s_p}$ $A_{sp} = 0.5\,in^2$ per ft

Check min. reinforcement (§5.7.3.3.2),

$M_{cr} := f_{r2}\cdot\frac{1}{6}\cdot 12\cdot in\cdot t_{s2}^2$ $1.2\cdot M_{cr} = 8.325\,kip\cdot ft$ $M_{up}\cdot ft = 12.30\,kip\cdot ft$

$\text{if}(M_{up}\cdot ft \geq 1.2\cdot M_{cr}, \text{"OK"}, \text{"NG"}) = \text{"OK"}$

6.4.4 Design for Negative Moment Region

assume bar # $bar_n := 5$

$d_n := t_{s1} - 2.0\cdot in - \frac{dia(bar_n)}{2}$ $d_n = 4.69\,in$

$A_s := \frac{0.85\cdot f'_c\cdot ft}{f_y}\cdot\left(d_n - \sqrt{d_n^2 - \frac{2\cdot M_{un}\cdot ft}{0.85\cdot\phi_f\cdot f'_c\cdot ft}}\right)$ $A_s = 0.37\,in^2$ per ft

use (top-transverse) bar # $bar_n = 5$ $s_n := 7.5\cdot in$ (max. spa. 12 in. per BDM memo)

$A_{sn} := A_b(bar_n)\cdot\frac{1\cdot ft}{s_n}$ $A_{sn} = 0.5\,in^2$ per ft

Check min. reinforcement (§5.7.3.3.2),

$M_{cr} := f_{r2}\cdot\frac{1}{6}\cdot 12\cdot in\cdot t_{s2}^2$ $1.2\cdot M_{cr} = 8.325\,kip\cdot ft$ $M_{un}\cdot ft = 7.438\,kip\cdot ft$

$\text{if}(M_{un}\cdot ft \geq 1.2\cdot M_{cr}, \text{"OK"}, \text{"NG"}) = \text{"NG"}$

Design for 1.2 Mcr,

$\frac{0.85\cdot f'_c\cdot ft}{f_y}\cdot\left(d_n - \sqrt{d_n^2 - \frac{2\cdot 1.2\cdot M_{cr}}{0.85\cdot\phi_f\cdot f'_c\cdot ft}}\right) = 0.42\,in^2$ **Say OK**

6.5 Control of Cracking by Distribution of Reinforcement (§5.7.3.4)

Service I load combination is to be considered for crack width control (§3.4.1).

Combined limit state load modifier (§1.3.2)

$\eta_s := 1$

Load factors (LRFD Table 3.4.1-1):

$\gamma_{dc} := 1.00$ for component and attachments

$\gamma_{dw} := 1.00$ for wearing surface and utilities (max.)

$\gamma_L := 1.00$ for LL

$M_{sp} := \eta_s \cdot (\gamma_{dc} \cdot M_{DCp} + \gamma_{dw} \cdot M_{DWp} + \gamma_L \cdot M_{LLp})$ $M_{sp} = 7.29 \frac{kip \cdot ft}{ft}$

$M_{sn} := \eta_s \cdot (\gamma_{dc} \cdot M_{DCn} + \gamma_{dw} \cdot M_{DWn} + \gamma_L \cdot M_{LLn})$ $M_{sn} = 4.51 \frac{kip \cdot ft}{ft}$

$\gamma_{ep} := 0.75$ for Class 2 exposure condition for deck (assumed)

$\gamma_{en} := 0.75$ for Class 2 exposure condition for deck (assumed)

$h := t_{s1}$ $h = 7\,in$

$\rho_p := \frac{A_{sp}}{d_p \cdot 12 \cdot in}$ $\rho_n := \frac{A_{sn}}{d_n \cdot 12 \cdot in}$

$n := \frac{E_s}{E_c}$ $n = 6.866$ $n := \max([\,\mathrm{ceil}((n - 0.495))\;\; 6\,])$

set $n = 7$ (round to nearest integer, §5.7.1, not less than 6)

$k(\rho) := \sqrt{(\rho \cdot n)^2 + 2 \cdot \rho \cdot n} - \rho \cdot n$ $k(\rho_p) = 0.272$

$j(\rho) := 1 - \frac{k(\rho)}{3}$ $j(\rho_p) = 0.909$

$f_{sa} := \frac{M_{sp} \cdot ft}{A_{sp} \cdot j(\rho_p) \cdot d_p}$ $f_{sa} = 34.1\,ksi$

for $bar_p = 5$ $s_p = 7.5\,in$

$d_c := (1 \cdot in) + \frac{dia(bar_p)}{2}$ $d_c = 1.3\,in$ (the actual concrete cover is to be used to compute d_c)

$\beta_s := 1 + \frac{d_c}{0.7(h - d_c)}$ $\beta_s = 1.33$

$\mathrm{if}\left(s_p \le \frac{700 \cdot \gamma_{ep} \cdot in}{\beta_s \cdot \frac{f_{sa}}{ksi}} - 2 \cdot d_c, \text{"OK"}, \text{"NG"}\right) = \text{"OK"}$ where $s_p = 7.5\,in$ $\frac{700 \cdot \gamma_{ep} \cdot in}{\beta_s \cdot \frac{f_{sa}}{ksi}} - 2 \cdot d_c = 9.0\,in$

$k(\rho_n) = 0.295$ $j(\rho_n) = 0.902$

$$f_{sa} := \frac{M_{sn} \cdot ft}{A_{sn} \cdot j(\rho_n) \cdot d_n} \qquad f_{sa} = 25.8\,ksi$$

for $bar_n = 5$ $s_n = 7.5\,in$

$$d_c := 2in + \frac{dia(bar_n)}{2} \qquad d_c = 2.31\,in$$ (the actual concrete cover is to be used to compute d_c)

$$\beta_s := 1 + \frac{d_c}{0.7(h - d_c)} \qquad \beta_s = 1.705$$

$$if\left(s_n \le \frac{700 \cdot \gamma_{en} \cdot in}{\beta_s \cdot \frac{f_{sa}}{ksi}} - 2 \cdot d_c, "OK", "NG"\right) = "NG"$$ where $s_n = 7.5\,in$ $\frac{700 \cdot \gamma_{en} \cdot in}{\beta_s \cdot \frac{f_{sa}}{ksi}} - 2 \cdot d_c = 7.3\,in$

say OK

6.6 Shrinkage and Temperature Reinforcement (§5.10.8.2)

For components less than 48 in. thick,

where $A_g := t_{s2} \cdot 1 \cdot ft$

$$A_{tem} := 0.11 \cdot \frac{A_g \cdot ksi}{f_y} \qquad A_{tem} = 0.17\,in^2$$ per ft

The spacing of this reinforcement shall not exceed $3 \cdot t_{s1} = 21\,in$ or 18 in (**per BDM memo 12 in.)**

top longitudinal - $bar := 4$ $s := 12 \cdot in$ $A_s := A_b(bar) \cdot \frac{1 \cdot ft}{s}$ $A_s = 0.2\,in^2$ per ft **OK**

6.7 Distribution of Reinforcement (§9.7.3.2)

The effective span length S_{eff} shall be taken as (§9.7.2.3):

$S_{eff} = 6.70\ ft$

For primary reinforcement perpendicular to traffic:

$$percent := \min\left(\left(\frac{220}{\sqrt{\frac{S_{eff}}{ft}}} \quad 67\right)\right) \qquad percent = 67$$

Bottom longitudinal reinforcement (**per BDM memo < slab thickness**): $t_{s2} = 7.5\,in$

$A_s := \frac{percent}{100} \cdot A_{sp}$ $A_s = 0.33\,in^2$ per ft

use bar # $bar := 4$ $s := 7.5 \cdot in$ $A_s := A_b(bar) \cdot \frac{1 \cdot ft}{s}$ $A_s = 0.32\,in^2$ per ft **OK**

6.8 Maximum bar spacing (§5.10.3.2)

Unless otherwise specified, the spacing of the primary reinforcement in walls and slabs shall not exceed 1.5 times the thickness of the member or 18 in.. The maximum spacing of temperature shrinkage reinforcement shall be as specified in §5.10.8.

$1.5 \cdot t_{s1} = 10.5\,in$ **OK**

6.9 Protective Coating (§5.12.4)

Epoxy coated reinforcement shall be specified for both top and bottom layer slab reinforcements except only top layer when the slab is with longitudinal post-tensioning.

7 Slab Overhang Design

(§3.6.1.3.4) Horizontal loads resulting from vehicular collision with barrier shall be considered in accordance with the provisions of LRFD Section 13.
(§13.7.3.1.2) Unless a lesser thickness can be proven satisfactory during the crash testing procedure, the min. edge thickness for concrete deck overhangs shall be taken as 8 in. for concrete deck overhangs supporting concrete parapets or barriers.

7.1 Applicable Limit States (§5.5.1)

Where traditional design based on flexure is used, the requirements for strength and service limit states shall be satisfied.

Extreme event limit state shall apply for the force effect transmitted from the bridge railing to bridge deck (§13.6.2).

7.2 Strength Limit state

Load Modifier

$\eta_D := 1.00$ for ductile components and connections (§1.3.3 & simplified)

$\eta_R := 1.00$ for redundant members (§1.3.4)

$\eta_I := 1.00$ for operationally important bridge (§1.3.5)

$\eta := \max\left(\begin{pmatrix} \eta_D \cdot \eta_R \cdot \eta_I \\ 0.95 \end{pmatrix}\right)$ $\eta = 1$ (§1.3.2)

Load factors (LRFD Table 3.4.1-1):

$\gamma_{dc} := 1.25$ for component and attachments

$\gamma_{dw} := 1.50$ for wearing surface and utilities (max.)

$\gamma_L := 1.75$ for LL

7.3 Extreme Event Limit State II

Extreme event limit state shall apply for the force effect transmitted from the vehicular collision force.

Load Modifier

$\eta_D := 1.00$ (§1.3.3)

$\eta_R := 1.00$ (§1.3.4)

$\eta_I := 1.00$ (§1.3.5)

$\eta_e := \max\left(\begin{pmatrix} \eta_D \cdot \eta_R \cdot \eta_I \\ 0.95 \end{pmatrix}\right)$ $\eta_e = 1$ (§1.3.2)

Load factors (LRFD Table 3.4.1-1):

$\gamma_{dc} := 1.25$ for component and attachments

$\gamma_{dw} := 1.50$ for wearing surface and utilities (max.)

$\gamma_{CT} := 1.00$ for collision force

7.4 Vehicular Collision Force (§13.7.2)

Railing test level TL-4 applies for high-speed highways, freeways, and interstate highways with a mixture of trucks and heavy vehicles.

The transverse and longitudinal loads need not be applied in conjunction with vertical loads (§A13.2). Design forces for railing test level **TL-4** (LRFD Table A13.2-1),

transverse $F_t := 54 \cdot kip$

longitudinal $F_L := 18 \cdot kip$

vertical (down) $F_v := 18 \cdot kip$

Effective Distances:

transverse $L_t := 3.50 \cdot ft$

longitudinal $L_L := 3.50 \cdot ft$

vertical $L_v := 18 \cdot ft$

Min. design height, H, 32 in. (LRFD Table A13.2-1) use $H := 32 \cdot in$

7.5 Design Procedure (§A13.3)

Yield line analysis and strength design for reinforced concrete may be used.

7.6 Nominal Railing Resistance (§A13.3)

For F-shape barriers, the approximate flexural resistance may be taken as:

Flexural capacity about vertical axis,

$M_w := 35.62 \cdot kip \cdot ft$

Additional flexural resistance of beam in addition to M_w, if any, at top of wall,

$M_b := 10.27 \cdot kip \cdot ft$

Flexural capacity about horizontal axis,

$M_c := 19.21 \cdot \frac{kip \cdot ft}{ft}$

Critical wall length, over which the yield mechanism occurs, L_c, shall be taken as:

$$L_c := \frac{L_t}{2} + \sqrt{\left(\frac{L_t}{2}\right)^2 + \frac{8 \cdot H \cdot (M_b + M_w)}{M_c}} \qquad L_c = 9.1\ ft$$

For impact within a barrier segment, the total transverse resistance of the railing may be taken as:

$$R_w := \left(\frac{2}{2 \cdot L_c - L_t}\right) \cdot \left(8 \cdot M_b + 8 \cdot M_w + \frac{M_c \cdot L_c^{\,2}}{H}\right) \qquad R_w = 131.11\ kip$$

7.7 Design Load Cases (§A13.4.1)

Case 1

Transverse and longitudinal forces at extreme event limit state.

Resistance factor (§A13.4.3.2) $\phi := 1.0$

(§C13.7.3.1.2) Presently, in adequately designed bridge deck overhangs, the major crash-related damage occurs in short sections of slab areas where the barriers is hit.

a. at inside face of parapet

$$M_s := \frac{\min\left(\left(R_w \quad 1.2 \cdot F_t\right)\right) \cdot H}{L_c + 2 \cdot H}$$ moment capacity of the base of the parapet (see memo),

$M_s = 11.97 \frac{kip \cdot ft}{ft}$

$M_{DCa} := 0.45 \cdot \frac{kip \cdot ft}{ft}$ DL M- at edge of curb (see deck.gts STRUDL output), $cw = 0.875\ ft$

design moment

$$M_u := \eta_e \cdot \left(\gamma_{dc} \cdot M_{DCa} + \gamma_{CT} \cdot M_s\right) \qquad M_u = 12.5 \frac{kip \cdot ft}{ft}$$

(§A13.4.2) Deck overhang may be designed to provide a flexural resistance, M_s, which is acting in coincident with tensile force, T (see memo),

$$T := \frac{\min\left(\left(R_w \quad 1.2 \cdot F_t\right)\right) \cdot ft}{L_c + 2 \cdot H} \qquad T = 4.49\,kip \qquad \text{per ft}$$

min. "haunch+slab" dimension, $A = 8.25\,in$

$A := t_{s2} + 0.75 \cdot in$

d_s, flexural moment depth at edge of curb,

assume bar # $bar_o := 5$

$$d_s := \left(7 \cdot in + \frac{A - 7 \cdot in}{overhang - 0.5 \cdot b_f} \cdot cw\right) - 2.5 \cdot in - \frac{dia\left(bar_o\right)}{2} \qquad d_s = 4.7\,in$$

A_s required for M_u and T,

$$A_s := \frac{0.85 \cdot f'_c \cdot ft}{f_y} \cdot \left(d_s - \sqrt{{d_s}^2 - \frac{2 \cdot M_u \cdot ft}{0.85 \cdot \phi \cdot f'_c \cdot ft}}\right) + \frac{T}{f_y} \qquad A_s = 0.67\,in^2 \qquad \text{per ft} \qquad (1)$$

Check max. reinforcement (§5.7.3.3.1)

The max. amount of prestressed and non-prestressed reinforcement shall be such that

where d_e $d_e := d_s$ $d_e = 4.7\,in$

$$c := \frac{A_s \cdot f_y - T}{0.85 \cdot \beta_1 \cdot f'_c \cdot 1 \cdot ft} \qquad c = 1\,in$$

$$\text{if}\left(\frac{c}{d_e} \le 0.42, \text{"OK"}, \text{"NG"}\right) = \text{"OK"} \qquad \frac{c}{d_e} = 0.221$$

The section is not over-reinforced. Over-reinforced reinforced concrete sections shall not be permitted.

b. at design section in the overhang

Design critical section for negative moment and shear shall be at d_c, (§4.6.2.1.6)

$$d_c := \min\left(\left(\frac{b_f}{3} \quad 15 \cdot in\right)\right) \qquad d_c = 15\,in$$

from CL of girder (may be too conservative, see training notes)

At the inside face of the parapet, the collision forces are distributed over a distance L_c for the moment and $L_c + 2H$ for the axial force. Similarly, assume the distribution length is increased in a 30 degree angle from the base of the parapet,

Collision moment at design section,

$$M_{se} := \frac{M_s \cdot L_c}{L_c + 2 \cdot 0.577 \cdot (overhang - cw - d_c)} \qquad M_{se} = 9.31 \frac{kip \cdot ft}{ft}$$

dead load moment @ d_c **from CL of exterior girder** (see deck.gts STRUDL output)

$overhang - d_c = 3.125\ ft$ from edge of deck

$$M_{DCb} := 1.96 \cdot \frac{kip \cdot ft}{ft} \qquad M_{DWb} := 0.06 \cdot \frac{kip \cdot ft}{ft}$$

design moment

$$M_u := \eta_e \cdot (\gamma_{dc} \cdot M_{DCb} + \gamma_{dw} \cdot M_{DWb} + \gamma_{CT} \cdot M_{se}) \qquad M_u = 11.85 \frac{kip \cdot ft}{ft}$$

(§A13.4.2) design tensile force, T,

$$T := \frac{\min((R_w \quad 1.2 \cdot F_t)) \cdot ft}{L_c + 2 \cdot H + 2 \cdot 0.577 \cdot (overhang - cw - d_c)} \qquad T = 3.81\ kip \quad \text{per ft}$$

d_s, flexural moment depth at design section in the overhang.

$$d_s := A - 2.5 \cdot in - \frac{dia(bar_o)}{2} \qquad d_s = 5.4\ in$$

A_s required for M_u and T,

$$\frac{0.85 \cdot f'_c \cdot ft}{f_y} \cdot \left(d_s - \sqrt{d_s^2 - \frac{2 \cdot M_u \cdot ft}{0.85 \cdot \phi \cdot f'_c \cdot ft}} \right) + \frac{T}{f_y} = 0.53\ in^2 \quad \text{per ft} \quad \text{(doesn't control)} \quad (2)$$

c. at design section in first interior span

The collision moment per unit width at the section under consideration can then be determined using the 30° distribution.

$$M_s = 11.97 \frac{kip \cdot ft}{ft}$$

Collision moment at at d_c from the exterior girder, (see deck.gts output, barrierM factor for 1 kip-ft of Ms),

$$M_{si} := M_s \cdot 0.824 \qquad M_{si} = 9.87 \frac{kip \cdot ft}{ft}$$

Using the 30° angle distribution, design moment

$$M_{si} := \frac{M_{si} \cdot L_c}{L_c + 2 \cdot 0.577 \cdot (overhang - cw + d_c)} \qquad M_{si} = 6.16 \frac{kip \cdot ft}{ft}$$

dead load moment @ this section (see deck.gts output) $d_c = 1.25\ ft$

$M_{DCi} := 2.11 \cdot \frac{kip \cdot ft}{ft}$ $M_{DWi} := 0.03 \cdot \frac{kip \cdot ft}{ft}$

design moment

$M_u := \eta_e \cdot (\gamma_{dc} \cdot M_{DCi} + \gamma_{dw} \cdot M_{DWi} + \gamma_{CT} \cdot M_{si})$ $M_u = 8.84 \frac{kip \cdot ft}{ft}$

d_s, flexural moment depth at the design section,

$d_s := t_{s1} - 2.0 \cdot in - \frac{dia(bar_o)}{2}$ $d_s = 4.69\,in$

A_s required for M_u,

$$\frac{0.85 \cdot f'_c \cdot ft}{f_y} \cdot \left(d_s - \sqrt{d_s^2 - \frac{2 \cdot M_u \cdot ft}{0.85 \cdot \phi \cdot f'_c \cdot ft}} \right) = 0.4\,in^2 \quad \text{per ft} \quad \text{(doesn't control)} \qquad (3)$$

Case 2 Vertical collision force

For concrete parapets, the case of vertical collision never controls.

Case 3 Check DL + LL

Resistance factor (§1.3.2.1) $\phi_f := 0.9$

For deck overhangs, where applicable, the §3.6.1.3.4 may be used in lieu of the equivalent strip method (§4.6.2.1.3).

a. at design section in the overhang

moment arm for 1.0 kip/ft live load (§3.6.1.3.4)

$x := overhang - cw - 1 \cdot ft - d_c$ $x = 15\,in$

live load moment without impact,

$w_L := 1.0 \cdot \frac{kip}{ft}$

$M_{LL} := M_1 \cdot w_L \cdot x$ $M_{LL} = 1.5 \frac{kip \cdot ft}{ft}$

factored moment

$M_u := \eta \cdot \left[\gamma_{dc} \cdot M_{DCb} + \gamma_{dw} \cdot M_{DWb} + \gamma_L \cdot M_{LL} \cdot (1.0 + IM) \right]$ $M_u = 6.03 \frac{kip \cdot ft}{ft}$

d_s, flexural moment depth at edge of curb,

$d_s := A - 2.5 \cdot in - \frac{dia(bar_o)}{2}$ $d_s = 5.44\,in$

A_s required for M_u,

$$\frac{0.85 \cdot f'_c \cdot ft}{f_y} \cdot \left(d_s - \sqrt{d_s^2 - \frac{2 \cdot M_u \cdot ft}{0.85 \cdot \phi_f \cdot f'_c \cdot ft}} \right) = 0.26\,in^2 \qquad \text{per ft} \qquad \text{(doesn't control)} \qquad (4)$$

b. at design section in first span

Assume slab thickness at this section, $t_{s1} = 7\,in$

use the same D.L. + L.L moment as in previous for design (approximately)

factored moment $M_u = 6.03\,\frac{kip \cdot ft}{ft}$

d_s, flexural moment depth at edge of curb,

$$d_s := t_{s1} - 2.0 \cdot in - \frac{dia(bar_o)}{2} \qquad d_s = 4.7\,in$$

A_s required for M_u,

$$\frac{0.85 \cdot f'_c \cdot ft}{f_y} \cdot \left(d_s - \sqrt{d_s^2 - \frac{2 \cdot M_u \cdot ft}{0.85 \cdot \phi_f \cdot f'_c \cdot ft}} \right) = 0.3\,in^2 \qquad \text{(doesn't control)} \qquad (5)$$

The largest of (1) to (5), As required, $A_s = 0.67\,in^2$ per ft

use bar # $bar_o = 5$ @ $s := 22.5 \cdot in$ **(top transverse) at edge of curb, put 1 #5 between every other top bar in the deck overhang region**

$bar_n = 5$ $s_n = 7.5\,in$

$$A_s := A_b(bar_o) \cdot \frac{1 \cdot ft}{s} + A_b(bar_n) \cdot \frac{1 \cdot ft}{s_n} \qquad A_s = 0.66\,in^2 \qquad \textbf{say OK}$$

Determine the point in the first bay of the deck where the additional bars are no longer needed,

$$A_s := A_b(bar_n) \cdot \frac{1 \cdot ft}{s_n} \qquad A_s = 0.5\,in^2$$

$$c := \frac{A_s \cdot f_y}{0.85 \cdot \beta_1 \cdot f'_c \cdot 1 \cdot ft} \qquad c = 0.9\,in$$

$$d_e := t_{s1} - 2.0 \cdot in - \frac{dia(bar_n)}{2} \qquad d_e = 4.7\,in$$

$a := \beta_1 \cdot c$ $a = 0.7\,in$

For the strength limit state,

$$M_{cap} := \phi_f \cdot A_s \cdot f_y \cdot \left(d_e - \frac{a}{2} \right) \qquad M_{cap} = 9.65\,kip \cdot ft \qquad \text{per ft}$$

For the extreme event limit state,

$$M_{cap} := \phi \cdot A_s \cdot f_y \cdot \left(d_e - \frac{a}{2} \right) \qquad M_{cap} = 10.72\,kip \cdot ft \qquad \text{per ft}$$

By inspection of (1) to (5), no additional bar is required beyond design section of the first bay.

Cut off length requirement (§5.11.1.2)

$15 \cdot dia(bar_o) = 0.781\ ft$ (controls by inspection)

8 Reinforcing Details

8.1 Development of Reinforcement (§5.11.2.1.1)

basic development length for #11 bar and smaller,

$$L_{db}(d_b, A_b) := \max\left(\begin{pmatrix} 1.0 \cdot ft \\ \dfrac{1.25 \cdot A_b \cdot f_y \cdot \sqrt{ksi}}{in \cdot ksi \cdot \sqrt{f'_c}} \\ 0.4 \cdot d_b \cdot \dfrac{f_y}{ksi} \end{pmatrix} \right)$$

For **#5** bars, $L_{db}(0.625 \cdot in, 0.31 \cdot in^2) = 15\,in$

For **#6** bars, $L_{db}(0.75 \cdot in, 0.44 \cdot in^2) = 18\,in$

For **epoxy coated** bars (§5.11.2.1.2),

with cover less than $3d_b$ or with clear spacing less than $6d_b$ .....times 1.5

not covered above .....times 1.2

For **widely spaced** bars..... times 0.8 (§5.11.2.1.3)

bars spaced laterally not less than 6 in. center-to-center, with not less than 3. in clear cover measured in the direction of spacing.

For **bundled** bars..... times 1.2 for a three-bar bundle (§5.11.2.3)

Lap Splices in Tension (§5.11.5.3.1)

The length of lap for tension lap splices shall not be less than either 12 in. or the following for Class A, B, or C splices:

Class A splice ..... times 1.0
Class B splice ..... times 1.3
Class C splice ..... times 1.7

Flexural Reinforcement (§5.11.1.2)

Except at supports of simple-spans and at the free ends of cantilevers, reinforcement shall be extended beyond the point at which it is no longer required to resist flexure for a distance not less than:

the effective depth of the member,
15 times the nominal diameter of bar, or
1/20 of the clear span.

No more than 50% of the reinforcement shall be terminated at any section, and adjacent bars shall not be terminated in the same section.

Positive moment reinforcement (§5.11.1.2.2)

At least 1/3 the positive moment reinforcement in simple-span members, and 1/4 the positive moment reinforcement in continuous members, shall extend along the same face of the member beyond the centerline of the support. In beams, such extension shall not be less than 6 in.

Negative moment reinforcement (§5.11.1.2.3)

At least 1/3 of the total tension reinforcement provided for negative moment at a support shall have an embedment length length beyond the point of inflection (DL + LL) not less than:

the effective depth of the member, d
12.0 d_b, and
0.0625 times the clear span.

Moment resisting joints (§5.11.1.2.4)

In Seismic Zones 3 and 4, joint shall be detailed to resist moments and shears resulting from horizontal loads through the joint.

Q.E.D.

Design Criteria

Loading: HL-93

Concrete:

SIP Panel, $f'_{ci} := 4.0 \cdot ksi$

$f'_c := 5.0 \cdot ksi$ (f'ci + 1 ksi)

CIP slab, $f'_{cs} := 4 \cdot ksi$

Reinforcing Steel: (§5.4.3)

AASHTO M-31, Grade 60, $f_y := 60 \cdot ksi$ $E_s := 29000 \cdot ksi$

Prestressing Steel:

AASHTO M-203, uncoated 7 wire, low-relaxation strands (§5.4.4.1)

Nominal strand diameter, $d_b := 0.375 \cdot in$ $A_p := 0.085 \cdot in^2$

(Trends now are toward the use of 3/8 in. diameter strand, per PCI J., 33(2), pp.67-109)

$f_{pu} := 270 \cdot ksi$

$f_{py} := 0.90 \cdot f_{pu}$ $f_{py} = 243\,ksi$

$f_{pe} := 0.80 \cdot f_{py}$ $f_{pe} = 194.4\,ksi$ @ service limit state after all losses (LRFD Table 5.9.3-1)

$E_p := 28500 \cdot ksi$

Design Method: LRFD

Mechanical shear ties on the top of panels are not required per PCI, special report, PCI J., 32(2), pp. 26-45.

Structure

Design span $L := 89.07 \cdot ft$

Roadway width $BW := 53.0 \cdot ft$ barrier face to barrier face

Girder spacing $S := 6.75 \cdot ft$

Skew angle $\theta := 14.65 \cdot deg$

no. of girder $N_b := 8$

curb width on deck, $cw := 10.5 \cdot in$

Deck overhang (CL. of exterior girder to end of deck) $overhang := \frac{BW - (N_b - 1) \cdot S}{2} + cw$ $overhang = 3.75\,ft$

slab design thickness $t_{s1} := 8.0 \cdot in$

for D.L. calculation $t_{s2} := 8.5 \cdot in$

Panel dimensions : $W_{sip} := 8.0 \cdot ft$ $L_{sip} := 6.34 \cdot ft$ $t_{sip} := 3.5 \cdot in$

CIP composite slab: $t_{cs1} := t_{s1} - t_{sip}$ $t_{cs1} = 4.5\,in$ (used for structural design)

$t_{cs2} := t_{s2} - t_{sip}$ $t_{cs2} = 5\,in$ (actual thickness)

$w_c := 0.160 \cdot kcf$

Future overlay (2" HMA), $w_{dw} := 0.140kcf \cdot 2in$ $w_{dw} = 0.023 \frac{kip}{ft^2}$

Minimum Depth and Cover (§9.7.1)

Min. Depth $if\left(t_{s2} \geq 7.0 \cdot in, "OK", "NG"\right) = "OK"$

Min. SIP thickness $if\left(0.55 \cdot t_{s2} > t_{sip} \geq 3.5 \cdot in, "OK", "NG"\right) = "OK"$

top cover for epoxy-coated main reinforcing steel = 1.5 in. (up to #11 bar)
= 2.0 in. (#14 & #18 bars) (§5.12.4 & Table 5.12.3-1)

bottom concrete cover (unprotected main reinforcing) = 1 in. (up to #11 bar)
= 2 in. (#14 & #18 bars)

sacrificial thickness = 0.5 in. (§2.5.2.4)

Optional deflection criteria for span-to-depth ratio (LRFD Table 2.5.2.6.3-1)

Min. Depth (continuous span) where $S = 6.75\,ft$ (slab span length):

$$if\left[\max\left(\left(\frac{S + 10 \cdot ft}{30}\right)\left(0.54 \cdot ft\right)\right) \leq t_{s1}, "OK", "NG"\right] = "OK" \qquad \max\left(\left(\frac{S + 10 \cdot ft}{30}\right)\left(0.54 \cdot ft\right)\right) = 6.7\,in$$

Skew Deck (§9.7.1.3)

$\theta \leq 25 \cdot deg = 1$ it true, the primary reinforcement may be placed in the direction of the skew; otherwise, it shall be placed perpendicular to the main supporting components.

Loads The precast SIP panels support their own weight, any construction loads, and the weight of the CIP slabs. For superimposed dead and live loads, the precast panels are analyzed assuming that they act compositely with the CIP concrete.

Dead load per foot

SIP panel $w_{sip} := t_{sip} \cdot w_c$ $w_{sip} = 0.047 \frac{kip}{ft^2}$

CIP slab $w_{cs} := t_{cs2} \cdot w_c$ $w_{cs} = 0.067 \frac{kip}{ft^2}$

Weight of one traffic barrier is $tb := 0.52 \cdot \frac{kip}{ft}$

Weight of one sidewalk is $tside := 0.52 \cdot \frac{kip}{ft}$

Wearing surface & construction loads

future wearing surface $w_{dw} = 0.023 \frac{kip}{ft^2}$

construction load (applied to deck panel only) $w_{con} := 0.050 \cdot \frac{kip}{ft}$ (§9.7.4.1)

Note that load factor for construction load is 1.5 (§3.4.2).

Live loads

(§3.6.1.3.3, not for empirical design method) Where deck is designed using the approximate strip method, specified in §4.6.2.1, the live load shall be taken as the wheel load of the 32.0 kip axle of the design truck, without lane load, where the strips are transverse.

$if(S \le 15 \cdot ft, "OK", "NG") = "OK"$ (§3.6.1.3.3)

Multiple presence factor: $M1 := 1.2$ $M2 := 1.0$ (§3.6.1.1.1.2)

Dynamic Load Allowance (impact) $IM := 0.33$ (§3.6.2.1)

Maximum factored moments **per unit width** based on Table A4-1: for $S = 6.75\ ft$

(include the effect of multiple presence factors and the dynamic load allowance)

applicability $if[min((0.625 \cdot S \quad 6 \cdot ft)) \ge overhang - cw, "OK", "NG"] = "OK"$

$if(N_b \ge 3, "OK", "NG") = "OK"$

$M_{LLp} := 5.10 \cdot \frac{kip \cdot ft}{ft}$

(§3.6.1.3.4) For deck overhang design with a cantilever, not exceeding 6.0 ft from the centerline of the exterior girder to the face of a continuous concrete railing, the wheel loads may be replaced with a uniformly distributed line load of 1.0 KLF intensity, located 1 ft from the face of the railing.

$if(overhang - cw \le 6 \cdot ft, "OK", "NG") = "OK"$

Load combination

Where traditional design based on flexure is used, the requirements for strength and service limit states shall be satisfied.
Extreme event limit state shall apply for the force effect transmitted from the bridge railing to bridge deck (§13.6.2).
Fatigue need not be investigated for concrete deck slabs in multi-girder applications (§5.5.3.1).

Strength Limit States

Load Modifier

$\eta_D := 1.00$ for conventional design (§1.3.3)

$\eta_R := 1.00$ for conventional level of redundancy (§1.3.4)

$\eta_I := 1.00$ for typical bridges (§1.3.5)

$\eta := \max\left(\begin{pmatrix} \eta_D \cdot \eta_R \cdot \eta_I \\ 0.95 \end{pmatrix}\right)$ $\eta = 1$ (§1.3.2)

Strength I load combination - normal vehicular load without wind (§3.4.1)

Load factors (LRFD Table 3.4.1-1&2):

$\gamma_{dc} := 1.25$ for component and attachments

$\gamma_{dw} := 1.50$ for DW

$\gamma_L := 1.75$ for LL

Section Properties

Non-composite section per foot

$A_{sip} := t_{sip} \cdot 12 \cdot in$ $A_{sip} = 42\,in^2$

$I_{sip} := \frac{12 \cdot in \cdot t_{sip}^3}{12}$ $I_{sip} = 42.875\,in^4$

$Y_{bp} := \frac{t_{sip}}{2}$ $Y_{bp} = 1.75\,in$

$Y_{tp} := t_{sip} - Y_{bp}$ $S_{tp} := \frac{I_{sip}}{Y_{tp}}$ $S_{bp} := \frac{I_{sip}}{Y_{bp}}$

$Y_{tp} = 1.75\,in$ $S_{tp} = 24.5\,in^3$ $S_{bp} = 24.5\,in^3$

$E_c := 33000 \cdot \left(\frac{w_c}{kcf}\right)^{1.5} \cdot \sqrt{\frac{f'_c}{ksi}} \cdot ksi$ $E_c = 4722.6\,ksi$ (§5.4.2.4)

$E_{ci} := 33000 \cdot \left(\frac{w_c}{kcf}\right)^{1.5} \cdot \sqrt{\frac{f'_{ci}}{ksi}} \cdot ksi$ $E_{ci} = 4224.0\,ksi$

Composite Section Properties (§4.6.2.6)

$E_{cs} := 33000 \cdot \left(\frac{w_c}{kcf}\right)^{1.5} \cdot \sqrt{\frac{f'_{cs}}{ksi}} \cdot ksi$ $E_{cs} = 4224.0\,ksi$ (§5.4.2.4)

modular ratio, $n := \sqrt{\frac{f'_c}{f'_{cs}}}$ $n = 1.118$

$b := 12 \cdot in$

$A_{slab} := \frac{b}{n} \cdot t_{cs1}$ $Y_{bs} := t_{sip} + \frac{t_{cs1}}{2}$ $AY_{bs} := A_{slab} \cdot Y_{bs}$

	Area	Y_b	$A \cdot Y_b$
CIP slab	$A_{slab} = 48.3\,in^2$	$Y_{bs} = 5.75\,in$	$A_{slab} \cdot Y_{bs} = 277.7\,in^3$
SIP panel	$A_{sip} = 42\,in^2$	$Y_{bp} = 1.75\,in$	$A_{sip} \cdot Y_{bp} = 73.5\,in^3$

$Y_b := \frac{A_{slab} \cdot Y_{bs} + A_{sip} \cdot Y_{bp}}{A_{slab} + A_{sip}}$ $Y_b = 3.89\,in$ @ bottom of panel

$Y_t := t_{sip} - Y_b$ $Y_t = -0.39\,in$ @ top of panel

$Y_{ts} := t_{sip} + t_{cs1} - Y_b$ $Y_{ts} = 4.11\,in$ @ top of slab

$I_{slabc} := A_{slab} \cdot \left(Y_{ts} - \frac{t_{cs1}}{2} \right)^2 + \frac{\left(\frac{b}{n} \right) \cdot t_{cs1}^3}{12}$ $I_{slabc} = 248.7\,in^4$

$I_{pc} := A_{sip} \cdot (Y_b - Y_{bp})^2 + I_{sip}$ $I_{pc} = 235.1\,in^4$

$I_c := I_{slabc} + I_{pc}$ $I_c = 483.8\,in^4$

Section modulous of the composite section

$S_b := \frac{I_c}{Y_b}$ $S_b = 124.4\,in^3$ @ bottom of panel

$S_t := \frac{I_c}{|Y_t|}$ $S_t = 1242.1\,in^3$ @ top of panel

$S_{ts} := n \cdot \frac{I_c}{Y_{ts}}$ $S_{ts} = 131.6\,in^3$ @ top of slab

Required Prestress

Assume the span length conservatively as the panel length, $L_{sip} = 6.34\ ft$

$M_{sip} := \frac{w_{sip} \cdot L_{sip}^2}{8}$ $M_{sip} = 0.234\,\frac{ft \cdot kip}{ft}$

$M_{cip} := \frac{w_{cs} \cdot L_{sip}^2}{8}$ $M_{cip} = 0.335\,\frac{ft \cdot kip}{ft}$

For the superimposed dead and live loads, the force effects should be calculated based on analyzing the strip as a continuous beam supported by infinitely rigid supports (§4.6.2.1.6)

$M_{DW} := 0.10 \cdot \frac{ft \cdot kip}{ft}$

$M_b := 0.19 \cdot \frac{kip \cdot ft}{ft}$ (see Strudl s-dl output)

$f_b := \frac{(M_{sip} + M_{cip})ft}{S_{bp}} + \frac{(M_{DW} + M_b + M_{LLp}) \cdot ft}{S_b}$ $f_b = 0.799\,ksi$

Tensile Stress Limits

$0.190 \cdot \sqrt{\frac{f'_c}{ksi}} \cdot ksi = 0.42\,ksi$ (§5.9.4.2.2)

$0 \cdot ksi$ WSDOT design practice

Required precompression stress at bottom fiber,

$f_{creq} := f_b - 0 \cdot ksi$ $f_{creq} = 0.799\,ksi$

If P_{se} is the total effective prestress force after all losses, and the center of gravity of stands is concentric with the center of gravity of the SIP panel:

$P_{se} := f_{creq} \cdot W_{sip} \cdot t_{sip}$ $P_{se} = 268.43\,kip$ per panel

Assume stress at transfer,

$f_{pi} := 0.75 \cdot f_{pu}$ $f_{pi} = 202.5\,ksi$ (LRFD Table 5.9.3-1)

Assume 15% final losses, the final effective prestress,

$p_{se} := f_{pi} \cdot (1 - 0.15)$ $p_{se} = 172.12\,ksi$

The required number of strands, $N_{req} := \frac{P_{se}}{p_{se} \cdot A_p}$ $N_{req} = 18.35$ $N_p := ceil(N_{req})$

Try $N_p := 19$

Prestress Losses

Loss of Prestress (§5.9.5)

$\Delta f_{pT} = \Delta f_{pES} + \Delta f_{pLT}$

where, Δf_{pLT} = long-term prestress loss due to creep of concrete, shrinkage of concrete, and relaxation of steel.

steel relaxation at transfer (Office Practice)

Curing time for concrete to attain f'ci is approximately 12 hours: set $t := 0.75$ day

$f_{pj} := 0.75 \cdot f_{pu}$ $f_{pj} = 202.5\,ksi$ immediately prior to transfer+steel relax.

(LRFD Table 5.9.3-1)

$$\Delta f_{pR0} := \frac{\log(24.0 \cdot t)}{40.0} \cdot \left(\frac{f_{pj}}{f_{py}} - 0.55 \right) \cdot f_{pj}$$

$\Delta f_{pR0} = 1.80\,ksi$

Given: $A_p = 0.085\,in^2$

straight strands $N_p = 19$ jacking force, $f_{pj} \cdot N_p \cdot A_p = 327.04\,kip$

(note: these forces include initial prestress relaxation loss, see §C5.9.5.4.4b)

$A_{ps} := A_p \cdot N_p$ $A_{ps} = 1.615\,in^2$ per panel

$A_{psip} := A_{ps} \cdot \frac{ft}{W_{sip}}$ $A_{psip} = 0.202\,in^2$ per ft

c.g. of all strands to c.g. of girder, $e_p := 0 \cdot in$

Elastic Shortening, Δf_{pES} (§5.9.5.2.3a)

f_{cgp}: concrete stress at c.g. of prestressing tendons due to the prestressing force immediately after transfer and the self-weight of the member at the sections of maximum moment.

Guess values: $p_{si} := 194.4 \cdot ksi$ prestress tendon stress at transfer (LRFD Table 5.9.3-1)

Given $\left(f_{pj} - \Delta f_{pR0} - p_{si}\right) \cdot \frac{E_{ci}}{E_p} = -\frac{-\left(p_{si} \cdot A_{psip}\right)}{A_{sip}}$ (note: used only when $e_p = 0$ in)

$p_{si} := \text{Find}(p_{si})$ $p_{si} = 194.4\,ksi$

$f_{cgp} := \frac{-\left[p_{si} \cdot \left(A_{psip}\right)\right]}{A_{sip}}$ $f_{cgp} = -0.93\,ksi$

$\Delta f_{pES} := f_{pj} - \Delta f_{pR0} - p_{si}$ $\Delta f_{pES} = 6.3\,ksi$

Approximate Estimate of Time Dependent Losses (§5.9.5.3)

Criteria: Normal-weight concrete
Concrete is either steam or moist cured
Prestressing is by low relaxation strands
Are sited in average exposure condition and temperatures

$H := 75$ the average annual ambient relative humidity (%)

$\gamma_h := 1.7 - 0.01H$ $\gamma_h = 0.95$

$\gamma_{st} := \frac{5}{1 + \frac{f'_{ci}}{ksi}}$ $\gamma_{st} = 1$

$\Delta f_{pR} := 2.5ksi$ an estimate of relaxation loss for low relaxation strand

Then,

$$\Delta f_{pLT} := 10.0 \frac{f_{pi} \cdot A_{psip}}{A_{sip}} \cdot \gamma_h \cdot \gamma_{st} + (12.0ksi)\gamma_h \cdot \gamma_{st} + \Delta f_{pR} \qquad \Delta f_{pLT} = 23.1\,ksi$$

Total loss Δf_{pT},

$$\Delta f_{pT} := \Delta f_{pR0} + \Delta f_{pLT} + \Delta f_{pES} \qquad \Delta f_{pT} = 31.25\,ksi$$

$f_{pe} := f_{pj} - \Delta f_{pT}$ $f_{pe} = 171.25\,ksi$

$\text{if}\left(f_{pe} \le 0.80 \cdot f_{py}, \text{"OK"}, \text{"NG"}\right) = \text{"OK"}$ (LRFD Table 5.9.3-1)

$P_e := \frac{N_p \cdot A_p \cdot f_{pe}}{W_{sip}}$ $P_e = 34.57 \frac{kip}{ft}$ per foot

Stresses in the SIP Panel at Transfer

Stress Limits for Concrete

Compression: $-0.60 \cdot f'_{ci} = -2.4\,ksi$

Tension: Allowable tension with bonded reinforcement which is sufficient to resist 120% of the tension force in the cracked concrete computed on the basis of an uncracked section (§5.9.4.1.2).

$$0.24 \cdot \sqrt{\frac{f'_{ci}}{ksi}} \cdot ksi = 0.48\,ksi$$

or w/o bonded reinforcement,

$$\min\left(\begin{pmatrix} 0.0948 \cdot \sqrt{\frac{f'_{ci}}{ksi}} \cdot ksi \\ 0.200 \cdot ksi \end{pmatrix}\right) = 0.19\,ksi$$ (Controls)

Because the strand group is concentric with the precast concrete panel, the midspan section is the critical section that should be checked.

Stress at Midspan

Effective stress after transfer,

$$P_{si} := \frac{N_p \cdot A_p \cdot p_{si}}{W_{sip}} \qquad P_{si} = 39.244 \frac{kip}{ft}$$

Moment due to weight of the panel,

$$M_{sip} = 0.234 \frac{kip \cdot ft}{ft}$$

At top of the SIP panel,

$$\left(-\frac{M_{sip} \cdot ft}{S_{tp}} - \frac{P_{si} \cdot ft}{A_{sip}}\right) = -1.05\,ksi \qquad < \text{allowable} \quad -0.60 \cdot f'_{ci} = -2.4\,ksi \qquad \textbf{OK}$$

At bottom of the SIP panel,

$$\left(\frac{M_{sip} \cdot ft}{S_{bp}} - \frac{P_{si} \cdot ft}{A_{sip}}\right) = -0.82\,ksi \qquad < \text{allowable} \quad -0.60 \cdot f'_{ci} = -2.4\,ksi \qquad \textbf{OK}$$

Stresses in SIP Panel at Time of Casting Topping Slab

The total prestress after all losses,

$$P_e = 34.57 \frac{kip}{ft}$$

Stress Limits for Concrete

Flexural stresses due to unfactored construction loads shall not exceed 65% of the 28-day compressive strength for concrete in compression or the modulus of rupture in tension for prestressed concrete form panels (§9.7.4.1).

The construction load shall be taken to be less than the weight of the form and the concrete slab plus 0.050 KSF.

For load combination Service I:

Compression: $-0.65 \cdot f'_c = -3.25\,ksi$

Tension: Modulous of rupture,

$$f_r := 0.24 \cdot \sqrt{\frac{f'_c}{ksi}} \cdot ksi \qquad f_r = 0.54\,ksi$$

Stresses at Midspan after all Non-Composite Loads

$$M_{sip} = 0.23 \frac{ft \cdot kip}{ft}$$

$$M_{cip} = 0.33\ \frac{ft \cdot kip}{ft}$$

$$M_{const} := 0.050 \cdot \frac{kip}{ft^2} \cdot \frac{L_{sip}^{\ 2}}{8} \qquad M_{const} = 0.25\ \frac{ft \cdot kip}{ft}$$

At top of the SIP panel,

$$\left[-\frac{(M_{sip} + M_{cip} + M_{const}) \cdot ft}{S_{tp}} - \frac{P_e \cdot ft}{A_{sip}} \right] = -1.23\ ksi \quad < \text{allowable} \quad -0.65 \cdot f'_c = -3.25\ ksi \quad \textbf{OK}$$

At bottom of the SIP panel,

$$\left[\frac{(M_{sip} + M_{cip} + M_{const}) \cdot ft}{S_{bp}} - \frac{P_e \cdot ft}{A_{sip}} \right] = -0.42\ ksi \quad < \text{allowable} \quad -0.65 \cdot f'_c = -3.25\ ksi \quad \textbf{OK}$$

Elastic Deformation (§9.7.4.1)

Deformation due to

$$\Delta := \frac{5}{48} \cdot \frac{(M_{sip} + M_{cip}) \cdot ft \cdot L_{sip}^{\ 2}}{E_c \cdot I_{sip}} \qquad \Delta = 0.02\ in$$

$$\text{if}\left[\Delta \le \begin{vmatrix} \min\left(\left(\frac{L_{sip}}{180} \quad 0.25 \cdot in \right) \right) & \text{if } L_{sip} \le 10 \cdot ft \quad , \text{"OK"} , \text{"NG"} \\ \min\left(\left(\frac{L_{sip}}{240} \quad 0.75 \cdot in \right) \right) & \text{otherwise} \end{vmatrix} \right] = \text{"OK"}$$

Stresses in SIP Panel at Service Loads

Compression:

- Stresses due to permanent loads

  $-0.45 \cdot f'_c = -2.25\ ksi$ for SIP panel

  $-0.45 \cdot f'_{cs} = -1.8\ ksi$ for CIP panel

- Stresses due to permanent and transient loads

  $-0.60 \cdot f'_c = -3\ ksi$ for SIP panel

  $-0.60 \cdot f'_{cs} = -2.4\ ksi$ for CIP panel

- Stresses due to live load + one-half of the permanent loads

  $-0.40 \cdot f'_c = -2\ ksi$ for SIP panel

  $-0.40 \cdot f'_{cs} = -1.6\ ksi$ for CIP panel

Tension:

$$0.0948 \cdot \sqrt{\frac{f'_c}{ksi}} \cdot ksi = 0.21\ ksi \qquad (\S 5.9.4.2.2)$$

$0 \cdot ksi$ WSDOT design practice

Service Load Stresses at Midspan

- *Compressive stresses at top of CIP slab*

  Stresses due to permanent load + prestressing

$$-\frac{(M_{DW} + M_b) \cdot ft}{S_{ts}} = -0.026\ ksi \quad < \text{allowable} \quad -0.45 \cdot f'_{cs} = -1.8\ ksi \quad \textbf{OK}$$

  Stresses due to permanent and transient loads,

$$-\frac{(M_{DW} + M_b + M_{LLp}) \cdot ft}{S_{ts}} = -0.49\ ksi \quad < \text{allowable} \quad -0.60 \cdot f'_{cs} = -2.4\ ksi \quad \textbf{OK}$$

- *Compressive stresses at top of the SIP panel*

  Stresses due to permanent load + prestressing

$$-\frac{P_e \cdot ft}{A_{sip}} - \frac{(M_{sip} + M_{cip}) \cdot ft}{S_{tp}} - \frac{(M_{DW} + M_b) \cdot ft}{S_t} = -1.1\ ksi \quad < \text{allowable} \quad -0.45 \cdot f'_c = -2.25\ ksi \quad \textbf{OK}$$

  Stresses due to permanent and transient loads,

$$-\frac{P_e \cdot ft}{A_{sip}} - \frac{(M_{sip} + M_{cip}) \cdot ft}{S_{tp}} - \frac{(M_{DW} + M_b + M_{LLp}) \cdot ft}{S_t} = -1.15\ ksi \quad < \text{allowable} \quad -0.60 \cdot f'_c = -3\ ksi \quad \textbf{OK}$$

Stresses due to live load + one-half the sum of effective prestress and permanent loads,

$$-0.5 \cdot \left(\frac{P_e \cdot ft}{A_{sip}}\right) - \frac{0.5 \cdot (M_{sip} + M_{cip}) \cdot ft}{S_{tp}} - \frac{(0.5 \cdot M_{DW} + 0.5 \cdot M_b + M_{LLp}) \cdot ft}{S_t} = -0.6\ ksi$$

$< \text{allowable} \quad -0.40 \cdot f'_c = -2\ ksi \quad \textbf{OK}$

- *Tensile stresses at bottom of the SIP panel*

  Stresses due to permanent and transient loads,

$$-\frac{P_e \cdot ft}{A_{sip}} + \frac{(M_{sip} + M_{cip}) \cdot ft}{S_{bp}} + \frac{(M_{DW} + M_b + M_{LLp}) \cdot ft}{S_b} = -0.02\ ksi$$

$< \text{allowable} \quad 0.0948 \cdot \sqrt{\frac{f'_c}{ksi}} \cdot ksi = 0.21\ ksi \quad \textbf{OK}$

$0 \cdot ksi$ (BDM)

Flexural Strength of Positive Moment Section

Resistance factors (§5.5.4.2.1)

$\phi_f := 0.90$ for flexure and tension of reinforced concrete

$\phi_p := 1.00$ for flexure and tension of prestressed concrete

$\phi_v := 0.90$ for shear and torsion

Ultimate Moment Required for Strength I

Dead load moment,

$M_{DC} := M_{sip} + M_{cip} + M_b \qquad M_{DC} = 0.76 \frac{kip \cdot ft}{ft}$

Wearing surface load moment,

$M_{DW} = 0.1 \frac{kip \cdot ft}{ft}$

Live load moment,

$M_{LLp} = 5.1 \frac{kip \cdot ft}{ft}$

$M_u := \eta \cdot (\gamma_{dc} \cdot M_{DC} + \gamma_{dw} \cdot M_{DW} + \gamma_L \cdot M_{LLp}) \qquad M_u = 10.02 \frac{kip \cdot ft}{ft}$

Flexural Resistance (§5.7.3)

Find stress in prestressing steel at nominal flexural resistance, f_{ps} (§5.7.3.1.1)

$f_{pe} = 171.249\,ksi \qquad 0.5 \cdot f_{pu} = 135\,ksi$

$if(f_{pe} \geq 0.5 \cdot f_{pu}, "OK", "NG") = "OK"$

$k := 2 \cdot \left(1.04 - \frac{f_{py}}{f_{pu}}\right) \qquad k = 0.28$ (LRFD Eq. 5.7.3.1.1-2)

$A_s := 0 \cdot in^2$

$A'_s := 0 \cdot in^2$ (conservatively)

d_p, distance from extreme compression fiber to the centroid of the prestressing tendons,

$d_p := t_{s1} - 0.5 \cdot t_{sip} \qquad d_p = 6.25\,in$

$W_{sip} = 96\,in$ effective width of compression flange

$\beta_1 := if\left[f'_{cs} \leq 4 \cdot ksi, 0.85, 0.85 - 0.05 \cdot \left(\frac{f'_{cs} - 4.0 \cdot ksi}{1.0 \cdot ksi}\right)\right] \qquad \beta_1 := \begin{cases} \beta_1 & \text{if } \beta_1 \geq 0.65 \\ 0.65 & \text{otherwise} \end{cases}$

$\beta_1 = 0.85$ (§5.7.2.2)

Assume rectangular section,

$$c := \frac{A_{ps} \cdot f_{pu}}{0.85 \cdot f'_{cs} \cdot \beta_1 \cdot W_{sip} + k \cdot A_{ps} \cdot \frac{f_{pu}}{d_p}} \qquad c = 1.47\,in$$

Stress in prestressing steel at nominal flexural resistance, f_{ps} (§5.7.3.1.1),

$$f_{ps} := f_{pu} \cdot \left(1 - k \cdot \frac{c}{d_p}\right) \qquad f_{ps} = 252.24\,ksi$$

Check stress in prestressing steel according to available development length, l_d

Available development length at midspan of the SIP panel,

$$l_d := 0.5 \cdot L_{sip} \qquad l_d = 3.17\ ft$$

rearranging LRFD eq. 5.11.4.1-1

$$f_{psld} := \frac{l_d}{1.6 \cdot d_b} \cdot ksi + \frac{2}{3} \cdot f_{pe} \qquad f_{psld} = 177.57\,ksi \qquad \text{(may be too conservative)}$$

$$f_{ps} := \min\left(\left(f_{ps} \quad f_{psld}\right)\right) \qquad f_{ps} = 177.57\,ksi$$

Flexural Resistance (§5.7.3.2.2 & 5.7.3.2.2),

$$a := \beta_1 \cdot c \qquad a = 1.25\,in \qquad A_{ps} = 1.615\,in^2 \quad \text{per panel}$$

$$M_n := A_{ps} \cdot f_{ps} \cdot \left(d_p - \frac{a}{2}\right)$$

$$M_n = 134.4\,kip \cdot ft$$

$$M_r := \phi_p \cdot M_n \qquad M_r = 134.4\,kip \cdot ft \qquad \text{per panel}$$

$$M_r := \frac{M_r}{W_{sip}} \qquad M_r = 16.81\,\frac{kip \cdot ft}{ft} \qquad \text{per ft}$$

$$M_u \le M_r = 1 \qquad \textbf{OK} \qquad \text{where} \qquad M_u = 10.02\,\frac{kip \cdot ft}{ft}$$

Limits of Reinforcement

Minimum Reinforcement (§5.7.3.3.2)

Compressive stress in concrete due to effective prestress force (after all losses) at midspan

$$f_{peA} := \frac{P_e \cdot ft}{A_{sip}} \qquad f_{peA} = 0.82\,ksi \qquad \text{(compression)}$$

Non-composite dead load moment at section, M_{dnc},

$M_{dnc} := M_{cip} + M_{sip}$ $M_{dnc} = 0.57 \frac{kip \cdot ft}{ft}$

$f_r = 0.54\ ksi$ use SIP panel

$M_{cr} := \left(f_r + f_{peA}\right) \cdot \frac{S_b}{ft} - M_{dnc} \cdot \left(\frac{S_b}{S_{bp}} - 1\right)$ $1.2 \cdot M_{cr} = 14.13 \frac{kip \cdot ft}{ft}$

$M_r \geq 1.2 \cdot M_{cr} = 1$ **OK** where $M_r = 16.81 \frac{kip \cdot ft}{ft}$

Negative Moment Section Over Interior Beams

Deck shall be subdivided into strips perpendicular to the supporting components (§4.6.2.1.1).
Continuous beam with span length as center to center of supporting elements (§4.6.2.1.6).
Wheel load may be modeled as concentrated load or load based on tire contact area.
Strips should be analyzed by classical beam theory.

Spacing in secondary direction (spacing between diaphragms):

$L_d := \frac{L}{1.0}$ $L_d = 89.07\ ft$

Spacing in primary direction (spacing between girders):

$S = 6.75\ ft$

Since $\frac{L_d}{S} \geq 1.50 = 1$, where $\frac{L_d}{S} = 13.2$ (§4.6.2.1.5)

therefore, all the wheel load shall be applied to primary strip. Otherwise, the wheels shall be distributed between intersecting strips based on the stiffness ratio of the strip to sum of the strip stiffnesses of intersecting strips.

Critical Section

The design section for negative moments and shear forces may be taken as follows:

Prestressed girder - shall be at 1/3 of flange width < 15 in.

Steel girder - 1/4 of flange width from the centerline of support.

Concrete box beams - at the face of the web.

top flange width $b_f := 15.06 \cdot in$

Design critical section for negative moment and shear shall be at d_c, (§4.6.2.1.6)

$d_c := \min\left(\left(\frac{1}{3} \cdot b_f \quad 15 \cdot in\right)\right)$ $d_c = 5\ in$ from CL of girder (may be too conservative, see training notes)

Maximum factored moments **per unit width** based on Table A4-1: for $S = 6.75\ ft$

(include multiple presence factors and the dynamic load allowance)

applicability $if[min((0.625 \cdot S \quad 6 \cdot ft)) \geq overhang - cw, "OK", "NG"] = "OK"$

$if(N_b \geq 3, "OK", "NG") = "OK"$

$M_{LLn} := 4.00 \cdot \frac{kip \cdot ft}{ft}$ (max. -M at d_c from CL of girder)

Dead load moment (STRUDL s-dl output)

$M_{DCn} := 0.18 \cdot \frac{kip \cdot ft}{ft}$ (dead load from deck overhang and sidl only, max. -M at d_c at interior girder, conservative) $\frac{d_c}{S} = 0.062$

$M_{DWn} := 0.10 \cdot \frac{kip \cdot ft}{ft}$

Service negative moment

$M_{sn} := M_{DCn} + M_{DWn} + M_{LLn}$ $M_{sn} = 4.28 \frac{kip \cdot ft}{ft}$

Factored negative moment

$M_{un} := \eta \cdot (\gamma_{dc} \cdot M_{DCn} + \gamma_{dw} \cdot M_{DWn} + \gamma_L \cdot M_{LLn})$ $M_{un} = 7.38 \frac{kip \cdot ft}{ft}$

Design of Section

Normal flexural resistance of a rectangular section may be determined by using equations for a flanged section in which case b_w shall be taken as b (§5.7.3.2.3).

$\beta_1 := if\left[f'_{cs} \leq 4 \cdot ksi, 0.85, 0.85 - 0.05 \cdot \left(\frac{f'_{cs} - 4.0 \cdot ksi}{1.0 \cdot ksi}\right)\right]$ $\beta_1 := \begin{cases} \beta_1 & \text{if } \beta_1 \geq 0.65 \\ 0.65 & \text{otherwise} \end{cases}$

$\beta_1 = 0.85$ (§5.7.2.2) conservatively use CIP slab concrete strength

assume bar # $bar_n := 5$

$$dia(bar) := \begin{cases} 0.5 \cdot in & \text{if } bar = 4 \\ 0.625 \cdot in & \text{if } bar = 5 \\ 0.75 \cdot in & \text{if } bar = 6 \\ 0.875 \cdot in & \text{if } bar = 7 \end{cases}$$

$d_n := t_{s2} - 2.5 \cdot in - \frac{dia(bar_n)}{2}$ $d_n = 5.69\ in$

$$A_s := \frac{0.85 \cdot f'_{cs} \cdot ft}{f_y} \cdot \left(d_n - \sqrt{d_n^2 - \frac{2 \cdot M_{un} \cdot ft}{0.85 \cdot \phi_f \cdot f'_{cs} \cdot ft}} \right) \qquad A_s = 0.3\,in^2 \qquad \text{per ft}$$

use (top-transverse) bar # $bar_n = 5$ $s_n := 9 \cdot in$

$$A_b(bar) := \begin{cases} 0.20 \cdot in^2 & \text{if } bar = 4 \\ 0.31 \cdot in^2 & \text{if } bar = 5 \\ 0.44 \cdot in^2 & \text{if } bar = 6 \\ 0.60 \cdot in^2 & \text{if } bar = 7 \end{cases}$$

$$A_{sn} := A_b(bar_n) \cdot \frac{1 \cdot ft}{s_n} \qquad A_{sn} = 0.41\,in^2 \qquad \text{per ft}$$

Maximum Reinforcement (§5.7.3.3.1)

The max. amount of prestressed and non-prestressed reinforcement shall be such that

where $d_e := d_n$

$$c := \frac{A_{sn} \cdot f_y}{0.85 \cdot \beta_1 \cdot f'_{cs} \cdot 1 \cdot ft} \qquad c = 0.72\,in$$

$$\text{if}\left(\frac{c}{d_e} \le 0.42, \text{"OK"}, \text{"NG"} \right) = \text{"OK"} \qquad \frac{c}{d_e} = 0.126$$

The section is not over-reinforced. Over-reinforced reinforced concrete sections shall not be permitted.

Minimum Reinforcement (§5.7.3.3.2)

$$f_{rs} := 0.24 \cdot \sqrt{\frac{f'_{cs}}{ksi}} \cdot ksi \qquad f_{rs} = 0.48\,ksi \qquad \text{use SIP panel concrete strength}$$

$$n := \frac{E_s}{E_{cs}} \qquad n = 6.866 \qquad n := \max([\,\text{ceil}((n - 0.495))\quad 6\,])$$

$n = 7$ set $n = 7$ (round to nearest integer, §5.7.1, not less than 6)

$(n - 1)A_{sn} = 2.48\,in^2$

$A_{gc} := t_{s2} \cdot ft \qquad A_{gc} = 102\,in^2$

$d_s := 2.5in + 0.625 \cdot in + 0.5 \cdot 0.75 \cdot in$ c.g. of reinforcement to top of slab $d_s = 3.5\,in$

$$Y_{ts} := \frac{A_{gc} \cdot 0.5 \cdot t_{s2} + (n - 1) \cdot A_{sn} \cdot d_s}{A_{gc} + (n - 1) \cdot A_{sn}} \qquad Y_{ts} = 4.23\,in$$

$$I_{cg} := \frac{ft \cdot t_{s2}^{3}}{12} + A_{gc} \cdot \left(0.5 \cdot t_{s2} - Y_{ts}\right)^2 + (n-1) A_{sn} \cdot \left(Y_{ts} - d_s\right)^2 \qquad I_{cg} = 615.49\,in^4$$

$$M_{cr} := \frac{f_{rs} \cdot I_{cg}}{Y_{ts}} \qquad M_{cr} = 5.817\,kip \cdot ft \qquad 1.2 \cdot M_{cr} = 6.98\,kip \cdot ft$$

$$if\left(M_{un} \cdot ft \geq 1.2 \cdot M_{cr}, "OK", "NG"\right) = "OK"$$

Crack Control (§5.7.3.4)

$\gamma_e := 0.75$ for Class 2 exposure condition for deck (assumed)

$d_c := 2.0 \cdot in + 0.5 \cdot dia(bar_n)$ $d_c = 2.31\,in$

$h := t_{s1}$ $h = 8\,in$

$$\beta_s := 1 + \frac{d_c}{0.7\left(h - d_c\right)} \qquad \beta_s = 1.581$$

$M_{sn} = 4.28\,\frac{kip \cdot ft}{ft}$

$n := \frac{E_s}{E_{cs}}$ $n = 6.866$ $n := ceil((n - 0.495))$ use slab concrete strength

set $n = 7$ (round to nearest integer, §5.7.1)

$$\rho := \frac{A_{sn}}{ft \cdot d_n} \qquad \rho = 6.056 \times 10^{-3}$$

$$k(\rho) := \sqrt{(\rho \cdot n)^2 + 2 \cdot \rho \cdot n} - \rho \cdot n \qquad k(\rho) = 0.252$$

$$j(\rho) := 1 - \frac{k(\rho)}{3} \qquad j(\rho) = 0.916$$

$$f_{sa} := \frac{M_{sn} \cdot ft}{A_{sn} \cdot j(\rho) \cdot d_n} \qquad f_{sa} = 23.85\,ksi$$

$$if\left(s_n \leq \frac{700 \cdot \gamma_e \cdot in}{\beta_s \cdot \frac{f_{sa}}{ksi}} - 2 \cdot d_c, "OK", "NG"\right) = "OK"$$ where $s_n = 9\,in$ $\frac{700 \cdot \gamma_e \cdot in}{\beta_s \cdot \frac{f_{sa}}{ksi}} - 2 \cdot d_c = 9.3\,in$

Shrinkage and Temperature Reinforcement (§5.10.8.2)

For components less than 48 in. thick,

where $A_g := t_{s2} \cdot 1 \cdot ft$

$$A_{tem} := 0.11 \cdot \frac{A_g \cdot ksi}{f_y} \qquad A_{tem} = 0.19\,in^2 \quad \text{per ft}$$

The spacing of this reinforcement shall not exceed $3 \cdot t_{s1} = 24\,in$ or 18 in.

top longitudinal - $bar := 4$ $s := 12 \cdot in$ $A_s := A_b(bar) \cdot \frac{1 \cdot ft}{s}$ $A_s = 0.2\,in^2$ per ft **OK**

Distribution of Reinforcement (§9.7.3.2)

The effective span length S_{eff} shall be taken as (§9.7.2.3):

web thickness $b_w := 7 \cdot in$

top flange width $b_f = 15.06\,in$

$$S_{eff} := S - b_f + \frac{b_f - b_w}{2} \qquad S_{eff} = 5.83\,ft$$

For primary reinforcement perpendicular to traffic:

$$percent := \min\left(\left(\frac{220}{\sqrt{\frac{S_{eff}}{ft}}} \quad 67\right)\right) \qquad percent = 67$$

Bottom longitudinal reinforcement (convert to equivalent mild reinforcement area):

$$A_s := \frac{percent}{100} \cdot \frac{A_{ps}}{W_{sip}} \cdot \frac{f_{py}}{f_y} \qquad A_s = 0.55\,\frac{in^2}{ft} \quad \text{per ft}$$

use bar # $bar := 5$ $s := 6.0 \cdot in$ $A_s := A_b(bar) \cdot \frac{1 \cdot ft}{s}$ $A_s = 0.62\,in^2$ per ft **OK**

Maximum bar spacing (§5.10.3.2)

Unless otherwise specified, the spacing of the primary reinforcement in walls and slabs shall not exceed 1.5 times the thickness of the member or 18 in.. The maximum spacing of temperature shrinkage reinforcement shall be as specified in §5.10.8.

$1.5 \cdot t_{s1} = 12\,in$ **OK**

Protective Coating (§5.12.4)

Epoxy coated reinforcement shall be used for slab top layer reinforcements except when the slab is overlayed with HMA.

W35DG Deck Bulb Tee, 48" Wide

Flexural Design Example, LRFD 2005

Units

$kip := 1000lb$

$ksi := \frac{kip}{in^2}$

$kcf := \frac{kip}{ft^3}$

1.0 Material Properties

Precast Concrete

$f_c := 8.0ksi$ $\rho := 0.160kcf$

$f_{ci} := 6.0ksi$ $\mu := 0.2$

$E_c := 33000ksi \cdot \left(\frac{\rho}{kcf}\right)^{\frac{3}{2}} \cdot \sqrt{\frac{f_c}{ksi}}$ $E_c = 5974\ ksi$

$E_{ci} := 33000ksi \cdot \left(\frac{\rho}{kcf}\right)^{\frac{3}{2}} \cdot \sqrt{\frac{f_{ci}}{ksi}}$ $E_{ci} = 5173\ ksi$

Rupture Modulus

$f_r := 0.24ksi \cdot \sqrt{\frac{f_c}{ksi}}$ $f_r = 0.679\ ksi$

Prestressing Steel (low-relaxation)

$f_{pu} := 270ksi$

$f_{py} := 243ksi$

$E_p := 28500ksi$

$A_{strand} := 0.217in^2$

$d_{strand} := 0.6in$

$n := \frac{E_p}{E_c}$

2.0 Geometric Properties

Span Length (bearing to bearing)

$L := 85ft$

Top flange width (i.e. girder spacing)

$b := 48in$ $t_s := 6in$

Section depth

$h := 35in$

Gross area (used for dead weight calculations)

$A_g := 669in^2$

Section Properties

$y_b := 20.9in$

$I_g := 100096in^4$

$I_p := 169341in^4$

$J := 29572in^4$

$S_b := \frac{I_g}{y_b}$ $S_b = 4789\,in^3$

$S_t := \frac{I_g}{(h - y_b)}$ $S_t = 7099\,in^3$

3.0 Permanent Loads

DC: Girder self-weight

$w_{dl} := A_g \cdot \rho$ $w_{dl} = 0.743 \frac{kip}{ft}$

DC: Diaphragms (at 1/3 points)

$P_{dia} := 8in \cdot (b - 6in) \cdot (h - 12in) \cdot \rho$ $P_{dia} = 0.716\,kip$

DC: Traffic Barriers (1/3 of F-shape)

$w_{sdl} := \frac{0.450}{3} \frac{kip}{ft}$ $w_{sdl} = 0.150 \frac{kip}{ft}$

DW:Overlay (3" ACP)

$w_{dw} := 3in \cdot b \cdot 0.140kcf$ $w_{dw} = 0.140 \frac{kip}{ft}$

4.0 Live Loads

HL-93 loading is travelling in 2 traffic lanes; for the maximum force effect taken at midspan:

$M_{HL} := \left(0.08 \cdot L^2 + 24 \cdot L \cdot ft - \frac{1120}{3} \cdot ft^2\right) \cdot \frac{kip}{ft}$ $M_{HL} = 2245\,kip \cdot ft$

this includes a 33% dynamic load allowance and a multiple presence factor of 1.0

Live Load Distribution Factor (design for interior beam):

Number of lanes

$N_L := 2$

From AASHTO Table 4.6.2.2.2b-1

$e_g := h - y_b - \frac{t_s}{2}$ $e_g = 11.100\,in$

$K_g := \left(I_g + A_g \cdot e_g^2\right)$ $K_g = 182523\,in^4$

The moment distribution factor is:

$g_{LL} := 0.075 + \left(\frac{b}{9.5ft}\right)^{0.6} \cdot \left(\frac{b}{L}\right)^{0.2} \cdot \left(\frac{K_g}{12L \cdot t_s^3}\right)^{0.1}$ $g_{LL} = 32.2\%$

5.0 Flexural Load Combinations

DC; Component load effects

$$M_{dl} := \frac{w_{dl}}{8} \cdot L^2 \qquad M_{dl} = 671\,kip \cdot ft$$

$$M_{sdl} := \frac{w_{sdl}}{8} \cdot L^2 + \frac{P_{dia}}{3} \cdot L \qquad M_{sdl} = 156\,kip \cdot ft$$

$$M_{DC} := M_{dl} + M_{sdl} \qquad M_{DC} = 827\,kip \cdot ft$$

Dead load moment at harping point (for stress at release)

$$M_{harp} := \frac{3 \cdot w_{dl} L^2}{25} \quad \textit{(at 0.4L point)} \qquad M_{harp} = 644\,kip \cdot ft$$

DW; Overlay load effects

$$M_{DW} := \frac{w_{dw}}{8} \cdot L^2 \qquad M_{DW} = 126\,kip \cdot ft$$

LL+I; Live load effects

$$M_{LL} := g_{LL} \cdot M_{HL} \qquad M_{LL} = 723\,kip \cdot ft$$

Conservatively, the design moment will be the maximum dead and live load moments at midspan

Service I

$$M_{serviceI} := M_{DC} + M_{DW} + M_{LL} \qquad M_{serviceI} = 1677\,kip \cdot ft$$

Service III

$$M_{serviceIII} := M_{DC} + M_{DW} + 0.8 \cdot M_{LL} \qquad M_{serviceIII} = 1532\,kip \cdot ft$$

Strength I

$$M_u := 1.25 \cdot M_{DC} + 1.5 \cdot M_{DW} + 1.75 M_{LL} \qquad M_u = 2489\,kip \cdot ft$$

6.0 Prestress Layout

Prestressed strand layout:

$N_{st} := 16$

$N_{harp} := 6$

$F_o := 9in$

$$F_{cl} := \begin{cases} (4.0in) & \text{if } N_{harp} \le 12 \\ \left[\frac{12 \cdot 4.0in + (N_{harp} - 12) \cdot 8.0in}{N_{harp}}\right] & \text{if } N_{harp} > 12 \end{cases} \qquad F_{cl} = 4.00\,in$$

$$E := \begin{cases} 2 \cdot in & \text{if } N_{st} \le 10 \\ \left[4 \cdot in \cdot \frac{(N_{st} - 5)}{N_{st}}\right] & \text{if } 10 < N_{st} \le 18 \\ \frac{(6 \cdot in \cdot N_{st} - 56 \cdot in)}{N_{st}} & \text{if } 18 < N_{st} \le 22 \\ \left[4 \cdot in \cdot \frac{(N_{st} - 3)}{N_{st}}\right] & \text{if } 22 < N_{st} \le 24 \\ \left[6 \cdot in \cdot \frac{(N_{st} - 10)}{N_{st}}\right] & \text{if } 24 < N_{st} \le 26 \end{cases} \qquad E = 2.75\,in$$

Distance to the prestressing steel C.G. measured from the bottom of the girder at midspan:

$A_{harp} := A_{strand} \cdot N_{harp}$

$A_{st} := A_{strand} \cdot N_{st}$

$A_{ps} := A_{st} + A_{harp}$

$N_{strand} := N_{harp} + N_{st}$ $\qquad A_{ps} = 4.774\,in^2$

$$y_{bps} := \frac{N_{harp} \cdot F_{cl} + N_{st} \cdot E}{N_{strand}} \qquad y_{bps} = 3.091\,in$$

Which gives a midspan strand eccentricity:

$e := y_b - y_{bps}$ $e = 17.8\,in$

The prestressing geometry at end of girder is:

Transfer Length

$l_t := 60 \cdot d_{strand}$ $l_t = 36.0\,in$

Self-weight moment at transfer point

$M_{lt} := w_{dl} \cdot \frac{l_t \cdot (L - l_t)}{2}$ $M_{lt} = 91\,kip \cdot ft$

Prestress offset of harped strands at bottom of girder end

$y_{bhend} := h - F_o$ $y_{bhend} = 26.0\,in$

Prestress offset at transfer point

Offset of harped strands from girder bottom

$y_{bhlt} := y_{bhend} - \frac{l_t}{0.4L} \cdot (y_{bhend} - F_{cl})$ $y_{bhlt} = 24.1\,in$

Offset of the C.G. of all strands from girder bottom

$y_{bslt} := \frac{y_{bhlt} \cdot N_{harp} + E \cdot N_{st}}{N_{strand}}$ $y_{bslt} = 8.6\,in$

Prestress eccentricity at transfer point

$e_{lt} := y_b - y_{bslt}$ $e_{lt} = 12.3\,in$

7.0 Prestress Force and Losses

Jacking PS force:

$f_{pi} := 0.75 \cdot f_{pu}$

$P_{jack} := A_{ps} \cdot f_{pi}$ $P_{jack} = 967\,kip$

Estimate of initial PS force after release, P_{sr}:

$P_{si} := 0.69 \cdot f_{pu} \cdot A_{ps}$ $P_{si} = 889\,kip$

Elastic Shortening Losses

$$f_{cgp} := \left(\frac{P_{si}}{A_g}\right) + \left(P_{si} \cdot \frac{e^2}{I_g}\right) - \left(M_{dl} \cdot \frac{e}{I_g}\right) \qquad f_{cgp} = 2.714\,ksi$$

$$\Delta f_{pES} := \left(\frac{E_p}{E_{ci}}\right) \cdot f_{cgp} \qquad \Delta f_{pES} = 14.95\,ksi$$

Steel Relaxation Losses (for low-relaxation strands)

$t := 1$ *(days before transfer)*

$$\Delta f_R := \frac{\log(24 \cdot t)}{40} \cdot \left(\frac{f_{pi}}{f_{pu}} - 0.55\right) f_{pi} \qquad \Delta f_R = 1.40\,ksi$$

$\Delta f_{pinstant} := \Delta f_{pES} + \Delta f_R$ $\Delta f_{pinstant} = 16.4\,ksi$

Release PS force

$P_{sr} := \left(f_{pi} - \Delta f_{pinstant}\right) \cdot A_{ps}$ $P_{sr} = 889\,kip$

Time Dependent Losses (for low-relaxation strands)

$\Delta f_{td} := 33ksi \cdot \left[1 - 0.15 \cdot \frac{\left(f_c - 6ksi\right)}{6ksi}\right] + 6ksi - 8ksi$ $\Delta f_{td} = 29.35\,ksi$

Total prestress loss

$\Delta f_{total} := \Delta f_{pinstant} + \Delta f_{td}$ $\Delta f_{total} = 45.70\,ksi$

Effective PS force

$P_{se} := \left(f_{pi} - \Delta f_{total}\right) \cdot A_{ps}$ $P_{se} = 749\,kip$

8.0 Concrete Stresses at Release

Allowable stresses:

Compression:

$0.6 \cdot f_{ci} = 3.600\,ksi$

Tension:

$\max\left(-0.2ksi, -\sqrt{f_{ci} \cdot ksi}\right) = -0.200\,ksi$

Stress at transfer point:

$f_{tlt} := P_{sr} \cdot \left(\frac{1}{A_g} - \frac{e_{lt}}{S_t}\right) + \frac{M_{lt}}{S_t}$ $f_{tlt} = -0.06\,ksi$ **OK**

$$f_{blt} := P_{sr}\cdot\left(\frac{1}{A_g} + \frac{e_{lt}}{S_b}\right) - \frac{M_{lt}}{S_b} \qquad f_{blt} = 3.39\,ksi \qquad \textbf{OK}$$

Stress at harp point:

$$f_{tharp} := P_{sr}\cdot\left(\frac{1}{A_g} - \frac{e}{S_t}\right) + \frac{M_{harp}}{S_t} \qquad f_{tharp} = 0.19\,ksi \qquad \textbf{OK}$$

$$f_{bharp} := P_{sr}\cdot\left(\frac{1}{A_g} + \frac{e}{S_b}\right) - \frac{M_{harp}}{S_b} \qquad f_{bharp} = 3.02\,ksi \qquad \textbf{OK}$$

9.0 Concrete and Steel Stresses at Service

Allowable concrete stress at midpsan

Compression; Cases I, II, and III:

$0.45\cdot f_c = 3.600\,ksi$ *(Under total dead load)*

$0.4\cdot f_c = 3.200\,ksi$ *(Under half of permanent loads and full live load)*

$0.6\cdot f_c = 4.800\,ksi$ *(Under full Service I load)*

Tension (per BDM):

0ksi *(Tension check under Service III load)*

Concrete stress at midspan:

$$f_{tI} := P_{se}\cdot\left(\frac{1}{A_g} - \frac{e}{S_t}\right) + \frac{M_{DC} + M_{DW}}{S_t} \qquad f_{tI} = 0.85\,ksi \qquad \textbf{OK}$$

$$f_{tII} := \frac{1}{2}\cdot\left[P_{se}\cdot\left(\frac{1}{A_g} - \frac{e}{S_t}\right) + \left(\frac{M_{DC} + M_{DW}}{S_t}\right)\right] + \frac{M_{LL}}{S_t} \qquad f_{tII} = 1.65\,ksi \qquad \textbf{OK}$$

$$f_{tIII} := P_{se}\cdot\left(\frac{1}{A_g} - \frac{e}{S_t}\right) + \frac{M_{serviceI}}{S_t} \qquad f_{tIII} = 2.08\,ksi \qquad \textbf{OK}$$

$$f_b := P_{se}\cdot\left(\frac{e}{S_b} + \frac{1}{A_g}\right) - \left(\frac{M_{serviceIII}}{S_b}\right) \qquad f_b = 0.06\,ksi \qquad \textbf{OK}$$

Steel stress at service

Allowable steel stress; AASHTO LRFD 5.9.3:

$$0.8\cdot f_{py} = 194\,ksi$$

$$\Delta f_{ps} := n\cdot\left(\frac{e}{y_b}\right)\cdot\frac{\left(M_{sdl} + M_{DW} + M_{LL}\right)}{S_b} \qquad \Delta f_{ps} = 10.2\,ksi$$

$$f_{psservice} := f_{pi} - \Delta f_{total} + \Delta f_{ps} \qquad \boxed{f_{psservice} = 167\,ksi} \qquad \textbf{OK}$$

10.0 Flexural Strength Check

As calculated above, the factored load is:

$$M_u = 2489\,kip\cdot ft$$

Bonded Steel Stress

$\beta_1 := 0.65$ $k := 0.28$

$$c_{rec} := \frac{\left(A_{ps}\cdot f_{pu}\right)}{0.85\cdot\beta_1\cdot f_c\cdot b + k\cdot A_{ps}\cdot\frac{f_{pu}}{\left(h - y_{bps}\right)}} \qquad c_{rec} = 5.768\,in$$

$$c_{flange} := \frac{A_{ps}\cdot f_{pu} - 0.85\cdot\beta_1\cdot f_c\cdot(b - 6in)\cdot t_s}{0.85\cdot\beta_1\cdot f_c\cdot 6in + k\cdot A_{ps}\cdot\frac{f_{pu}}{\left(h - y_{bps}\right)}} \qquad c_{flange} = 4.630\,in$$

$$c := \begin{cases} c_{rec} & \text{if } c_{rec} \le t_s \\ c_{flange} & \text{otherwise} \end{cases} \qquad a := \beta_1\cdot c$$

$$f_{ps} := f_{pu}\cdot\left[1 - k\cdot\frac{c}{\left(h - y_{bps}\right)}\right] \qquad f_{ps} = 256.3\,ksi$$

Moment capacity at midspan

$\phi := 1.0$

$$\phi M_n := \begin{cases} \phi\cdot A_{ps}\cdot f_{ps}\cdot\left(h - y_{bps} - \frac{a}{2}\right) & \text{if } c_{rec} \le 6in \\ \phi\cdot\left[A_{ps}\cdot f_{ps}\cdot\left(h - y_{bps} - \frac{a}{2}\right) + 0.85\cdot\beta_1\cdot f_c\cdot(b - 6\cdot in)\cdot 6\cdot in\cdot\left(\frac{a}{2} - \frac{6in}{2}\right)\right] & \text{otherwise} \end{cases}$$

3063 kip·ft

OK

11.0 Reinforcement Limits

Maximum RF

$$\frac{c}{\left(h - y_{bps}\right)} = 0.181$$

0.42 maxmimum **(LRFD 5.7.3.3.1-1)** **OK**

Mimumum RF

$$f_{cpe} := P_{se}\cdot\left(\frac{1}{A_g} + \frac{e}{S_b}\right) \qquad f_{cpe} = 3.902\,ksi$$

$$M_{cr} := S_b\cdot\left(f_{cpe} + f_r\right) \qquad M_{cr} = 1828\,kip\cdot ft$$

ϕM_n must be greater than the lesser of 1.2 M_{cr} and 1.33 M_u ***(LRFD 5.7.3.3.2)***

$1.2M_{cr} = 2194\,kip\cdot ft$

$1.33\cdot M_u = 3311\,kip\cdot ft$

$\phi M_n = 3063\,kip\cdot ft$ **OK**

12.0 Camber and Deflection

Self-Weight Effect:

$$\Delta_{dc} := -\frac{5 \cdot w_{dl} \cdot L^4}{384 \cdot E_{ci} \cdot I_g} \qquad \Delta_{dc} = -1.686\,in$$

Prestress Effect:

$$a_c := 0.4 \cdot L$$

$$e_h := e - \left[y_b - \left(\frac{y_{bhend} \cdot N_{harp} + E \cdot N_{st}}{N_{strand}} \right) \right]$$

$$\Delta_{ps} := \frac{P_{sr}}{E_{ci} \cdot I_g} \cdot \left[\frac{e \cdot L^2}{8} - \frac{e_h \cdot (a_c)^2}{6} \right] \qquad \Delta_{ps} = 3.689\,in$$

Superimposed Loads

$$\Delta_{sdl} := \frac{-5 \cdot (w_{sdl} + w_{dw}) \cdot L^4}{384 \cdot E_c \cdot I_g} - \frac{23 P_{dia} \cdot L^3}{648 \cdot E_c \cdot I_g} \qquad \Delta_{sdl} = -0.615\,in$$

Long-term deflections from BDM multiplier method (Table 5-20):

Camber at Transfer

$$C_i := \Delta_{ps} + \Delta_{dc} \qquad C_i = 2.00\,in$$

Camber at 2000 days

$$C_{final} := 2.50 \cdot \Delta_{dc} + 2.25 \cdot \Delta_{ps} \qquad C_{final} = 4.09\,in$$

Deflection from barrier and overlay

$$C_{sidl} := 2.75 \cdot \Delta_{sdl} \qquad C_{sidl} = -1.69\,in$$

Final Camber

$$C_{fsidl} := C_{final} + C_{sidl} \qquad C_{fsidl} = 2.39\,in$$



Prestressed Voided Slab with Cast-in-Place Topping

General Input								Specification Reference
		AASHTO LRFD Specifications						
Girder type:	18	Prestressed Precast Flat Slab						Prelim.Plan, Sh 1
Span Length:	L =	58.00	ft	C.L. to C.L. Bearing				BDM 5.6.2-A
Girder Length:	L_g =	58.83	ft	End to End				BDM fig. 5-A-XX
Bridge Width:	W =	42.75	ft	Deck Width				Prelim.Plan, Sh 1
Number of Lanes		2						"
Skew Angle:	q_{skew} =	0.00	degrees					"
Girder Section Properties								
Girder Width:	b =	4.00	ft	=	48.00	in		BDM fig. 5-A-XX
Girder Depth:	d =	18.00	in	=	1.50	ft		"
Height	h =	23.00	in					
Top Flange Thickness	t_{tf} =	4.50	in	(from top of void to bottom of slab).				"
Bottom Flange Thickness	t_{bf} =	4.50	in	(from bottom of void to bottom of girder).				"
	$h_f = t_d + t_{tf}$ =	9.50						
Width of each Void	b_{eachV} =	9.00	in					"
Net Width of Girder	bw =	21.00	in	A_{actual} =	5.25	in^2		
Number of Voids	N_v =	3		A_{design}=	5.50	in^2		"
Area of Each Void	$A_{each\ v}$ =	63.62	in^2					"
Void Area:	A_v =	190.85	in^2	Void Perimeter each=	28.27	in		"
Area of Girder	A_g =	673.15	in^2					"
Area of Deck + Leg	A_d =	240.00	in^2					
Area of Comp. Sect.	A_{comp} =	913.15	in^2					
Number of girders	N_g =	10	W/b =	10.69				Prelim.Plan, Sh 2
Wt of barrier	w_{TB} =	0.50	k/ft					
Thickness of deck	t_d =	5.00	in					
Wt of Concrete	w_c=	0.155	kcp	for calculating E_c				BDM 5.1.1-D
Wt of Concrete	w_{cd} =	0.160	kcp	for dead load calculations				BDM 3.1.1
Strength of Concrete								
Deck	f_c' =	4.0	ksi					BDM 5.1.1-A.1
Final	f_c' =	8.5	ksi	Transfer	f_{ci}' =	7.0	ksi	BDM 5.1.1-A.2
*Modulus of Elasticity (girder),	$E_c = 33000 w_c^{1.5} \sqrt{f_c'}$ =	5871.1	ksi					
*Modulus of Elasticity (deck),	$E_c = 33000 w_c^{1.5} \sqrt{f_c'}$ =	4027.6	ksi					BDM 5.1.1-D LRFD 5.4.2.4-1
*Modulus of Elasticity (transfer),	$E_{ci} = 33000 w_c^{1.5} \sqrt{f_{ci}'}$ =	5328.0						
	nc =	1.46	ratio for transformed section					LRFD 5.7.1
Modulus of Rupture,	$f_r = 0.24 \sqrt{f_c'}$ =	0.700	ksi					LRFD 5.4.2.6
Modulus of Rupture to calculate min. reinforcement,	$f_{rMcr\ min} = 0.37 \sqrt{f_c'}$ =	1.08	ksi					"
Poisson's ratio =		m =	0.2					LRFD 5.4.2.5

						Reference
Reinforcing Steel - deformed bars						LRFD 5.4.3
Yield strength	f'_y =	60.00	ksi			BDM 5.1.2
Elastic modulus	E_s =	29000.00	ksi			LRFD 5.4.3.2
Prestressing Input						
Strand diam.	d_b =	0.60	in	Area = 0.217	in^2	BDM 5.1.3-A
Ultimate Strength	f_{pu} =	270.00	ksi			LRFD Table 5.4.4.1-1
Yield Strength	f_{py} = .9 f_{pu} =	243.00	ksi			"
Prior to Transfer	f_{pbt} = 0.75 f_{pu} =	202.50	ksi			LRFD Table 5.9.3-1
Effective Stress Limit	f_{pe} = 0.8 f_{py} =	194.40	ksi			"
Modulus of elasticity,	E_p =	28500	ksi.			LRFD 5.4.4.2
Number of Bonded Strands ~2 in from Bottom		14				BDM fig. 5-A-XX
Number of Bonded Strands ~4 in from Bottom		6		Eccentricity (E)		"
Number of Bonded Strands ~6 in from Bottom		0		**E = 4.71**	**in**	"
Number of Debonded Strands ~2 in from Bottom		4		**OK**	**OK**	"
Number of Debonded Strands ~4 in from Bottom		0		**OK**		"
Total Number of Bottom Strands		24		≤	50	**OK**
Total Number of Top Strands		4		≤	6	**OK**
Eccentricities of Prestress Strands						
C. G. of bottom strands to bottom of girder =				2.50	in.	BDM fig. 5-A-XX
C. G. of top strands to bottom of girder =				15.00	in.	"
C. G. of bonded bottom strands to C.G. of girder,	e_{bb} =			6.40	in.	"
C. G. of debonded strands to C.G. of girder,	e_{db} =			7.00	in.	"
C. G. of all bottom strands to C.G. of girder,	e_b =			6.50	in.	"
C. G. of top strands to C.G. of girder,	e_t =			6.00	in.	"
E = C. G. of all strands to C.G. of girder =				**4.71**	**in.**	

Output

HS20-44 Force Effect:	**Jacking Force, P_j =**	**1230.4**	**kips**	
Live Load Force Effect:	Moment =	1294.23	ft-kips per lane	See Section 7
	Reaction =	95.69	kips per lane	"

Service Limit State

Concrete Stresses at Transfer		**Top of Girder**		**Bottom of Girder**		**Check**
	Load Case	Calculated	Allowable	Calculated	Allowable	
At d_v	DL+P/S	0.099	0.503	-3.021	-4.200	**OK**
At mid-span	DL+P/S	-1.031	0.503	-2.378	-4.200	**OK**
Concrete Stresses at const.	Load Case	Calculated	Allowable	Calculated	Allowable	
At mid-span	DL+P/S	-1.639	0.503	-1.463	-4.200	**OK**
Concrete Stresses at Service		**Limit State I**		**Limit State III**		
At mid-span	DL+LL+P/S	-2.430	-5.100	-2.584	0.000	**OK**
		-	-	-0.146	0.000	**OK**
	DL+P/S	-1.639	-3.825	-	-	**OK**
	LL+1/2DL+1/2P/S	-1.556	-3.400	-	-	**OK**

Strength Limit State

Moment at Mid-span, ft-kips	Mu =	1386	f Mn =	1856.9	**OK**

Table of Contents

Content

1 Structure:
Single Span Bridge
2 Live load
HL-93
3 Material Properties
Concrete
4 Allowable Concrete Stresses at Service Limit State
Tensile stress limit
Compressive stress limits after all losses
5 Computation of Section Properties
Girder and Composite Section Properties (Table 5-1)
Transformed Section Properties (Table 5-2)
6 Limit State
Service limit state
Load combinations and load factors
7 Vehicular Live Load
Design vehicular live load
Maximum live load force effect
Dynamic load allowance (Impact, IM)
Distribution of Live Load, Dfi (Beam Slab Bridges)
Shear Distribution Factor
Table 7-2: Summary of Live Load Distribution Factors:
Table 7-3: Distributed Live Loads
8 Computation of Stresses
Stresses Due to Weight of Girder (Table 8-1 thru 8-5)
Concrete Stresses Due to Traffic Barrier (Table 8-6 thru 8-8)
Concrete Stresses Due to Concrete Deck and Legs (Table 8-9 thru 8-11)
Concrete Stresses Due to LL+IM (Composite Section) (Table 8-12)
Summary of Stresses at dv (Table 8-13)
Summary of Stresses at Mid-Span (Table 8-14)
9 Approximate Evaluation of Pre-Stress Losses
Time Dependent Losses
Loss due to Strand Relaxation
Loss due to elastic shortening
10 Stresses at Service Limit State
Stresses After Elastic Shortening and Relaxation (Table 10-1)
Stresses After Losses (Noncomposite) (Table 10-2)
Summary of Stresses at Service Limit State (Table 10-3)
Tensile Stress Limit in Areas Without Bonded Reinforcement (at dv)
Compressive Stress Limit at Service - I Load Combination
Tensile Stress Limit at Service - III Load Combination
Stresses at transfer

11 Strength Limit State

Resistance factors
Flexural forces — **NG Mu No Check**
Flexural resistance — **OK for rectangular section**
Nominal flexural resistance
Minimum reinforcement
Development of prestressing strand — **OK developed**

12 Shear Design

Design procedure
Effective Web Width, bv, and Effective Shear Depth, dv
Component of Prestressing Force in Direction of Shear Force, Vp
Shear Stress Ratio
Factored shear force
fpo
Factored moment
Longitudinal Strain (Flexural Tension)
Determination of **b** **and** **q**
Shear strength
Required shear strength
Maximum spacing of shear reinforcement
Minimum shear reinforcement — **OK for Min. Transverse Reinf.**
Longitudinal reinforcement — **OK for Longitudinal Reinforcement**

13 Deflection and Camber

Deflection due to prestressing forces at Transfer
Deflection due to weight of Girder
Deflection due to weight of Traffic Barrier TB
Deflection due to weight of Deck and Legs
Deflection (Camber) at transfer, Ci
Creep Coefficients (Table 13-1)
Final Deflection Due to All Loads and Creep — **OK for deflection**
Time Verses Deflection Curve (fig. 13-1)

References

Prestressed Voided Slab Design
AASHTO LRFD Specifications

Specification Reference

1 Structure: Project XL2526, Name Br #539/858E

Single Span Bridge

Span Length:	58.00	ft	C.L. / C.L. Bearing /	Prelim Plan, Sh 1
Girder Length:	58.83	ft		
Bridge Width:	42.75	ft	Deck between curbs &/or barriers	"
Girder Width:	4.00	ft		BDM fig. 5-A-XX
Number of girders:	10			Prelim Plan, Sh 1

2 Live load

BDM 3.1.2-A
LRFD 3.6.1

HL-93

Vehicular live load designated as " HL-93 " shall consist of a combination of : LRFD 3.6.1.2.1

Design truck or design tandem, plus
Design lane load

Design truck is equivalent to AASHTO HS20-44 truck. LRFD 3.6.1.2.2

The design lane shall consist of a 0.64 klf, uniformly distributed in the longitudinal direction. Design lane load shall be assumed to be uniformly distributed over 10 ft width in the transverse direction. LRFD 3.6.1.2.4

Design tandem shall consist of a pair of 25.0 kip axles spaced at 4'-0" apart LRFD 3.6.1.2.3

Number of design lanes: LRFD 3.6.1.1.1

Integer part of : Width / (12 ft lane) = 3 Lanes
and 2 lanes if width is 20-24ft.

3 Material Properties

Concrete

LRFD Specifications allows a concrete compressive strength with a range of 2.4 to 10.0 ksi at 28 days. Compressive strength for prestressed concrete and decks shall not be less than 4.0 ksi. LRFD 5.4.2.1

4 Allowable Concrete Stresses at Service Limit State

LRFD 5.9.4

Tensile stress limit

LRFD 5.9.4.2.2

For service loads which involve traffic loading, tensile stress in members with bonded or unbonded prestressing strands shall be investigated using Service - III load combination.

Tension in other than precompressed tensile zone assuming uncracked section:

$f_t = 0.19\sqrt{f'_{ci}}$ Transfer & Lifting BDM 5.2.3-B

$f_t = 0.19\sqrt{f'_c}$ Shipping "

Tension in precompressed tensile zone:

f_t = 0.00 ksi "

Compressive stress limits after all losses

Compression shall be investigated using Service - I load combination: LRFD 5.9.4.2

$f_c = 0.45\ f'_c$	Due to permanent loads	BDM 5.2.3-B
$f_c = 0.60\ f'_c$	To all load combinations	"
$f_c = 0.40\ f'_c$	Due to transient loads and one-half of permanent loads	"

5 Computation of Section Properties

Girder and Composite Section Properties

Table 5-1: Moment of Inertia, I

	Area (in^2)	Y_b (in)	Ix` (in^4)	d (in)	Ad^2 (in^4)	Ix (in^4)
Girder	673.15	9.00	22021.6	3.0	6149.6	28171.2
Legs	0.00	0.00	0.0	0.0	0.0	0.0
Deck	240.00	20.50	500.0	-8.5	17248.3	17748.3
Composite	913.1	12.02	-	-	-	45919.5

Ybg = 9.00 in Ytg = 9.0 in

Ybc = 12.02 in Ytgc = 6.0 in

Ytsc = 11.0 in

Torsional Moment of Inertia

J = 55820 in^4 LRFD C4.6.2.2.1-3

Section Modulus:

Girder

(Bottom) $S_b = \frac{I_g}{y_{bg}} =$ 2446.8 in^3

(Top) $S_t = \frac{I_g}{y_{tg}} =$ 2446.8 in^3

Composite

(Bottom) $S_b = \frac{I_{comp}}{y_{bc}} =$ 3819.5 in^3

(Top girder) $S_t = \frac{I_{comp}}{y_{tgc}} =$ 7682.1 in^3

(Top slab) $S_t = \frac{I_{comp}}{y_{tsc}} =$ 4183.06 in^3

Transformed section properties

Deck

b_e = b/nc = 32.93 in

Legs

A_{lege} = 0.00 in^2

Y_{blege} = 0.00 in

I_{xlege} = 0.0 in^4

Table 5-2: Moment of Inertia Transformed section, I

	Area (in^2)	Y_b (in)	Ix` (in^4)	d (in)	Ad^2 (in^4)	Ix (in^4)
Girder	673.15	9.00	22021.6	2.3	3438.0	25459.6
Legs	0.00	0.00	0.0	0.0	0.0	0.0
Deck	164.64	20.50	500.0	-9.2	14056.6	14556.6
Composite	837.8	11.26	-	-	-	40016.2

Ybgt = 9.00 in Ytgt = 9.0 in
Ybct = 11.26 in Ytgct = 6.7 in
Ytsct = 11.7 in

Composite (Bottom) $S_{bt} = \frac{I_{compt}}{y_{bct}} =$ 3553.9 in^3

(Top girder) $S_{ttg} = \frac{I_{compt}}{y_{tgct}} =$ 5937.1 in^3

(Top slab) $S_{tts} = \frac{I_{compt}}{y_{tsct}} =$ 3408.52 in^3

6 Limit State

Each component and connection shall satisfy the following equation for each limit state :

LRFD Eqn. 1.3.2.1-1

$$\sum \eta_i \gamma_i Q_i \le \phi R_n = R_r$$

Where:

Load Modifier for Ductility, Redı for loads which a max. value of g_i is appropriate

$\mathbf{h_i} = \eta_i \eta_R \eta_I \ge 0.95$ LRFD 1.3.2.1-2

$\mathbf{h_i} = \frac{1}{\eta_D \eta_R \eta_I} \le 1.00$ for loads which a min. value of g_i is appropriate LRFD 1.3.2.1-3

$\mathbf{h_D}$ = Ductility factor LRFD 1.3.3

$\mathbf{h_R}$ = Redundancy factor LRFD 1.3.4

$\mathbf{h_I}$ = Operational Importance factor LRFD 1.3.5

$\mathbf{h_i}$ = 1.00 for any ordinary structure

Therefore the Limit State Equation simplifies to:

$$\sum \gamma_i Q_i \le \phi R_n = R_r$$

Where:

g_i = Load Factor, statistically based multiplier applied to force effects LRFD 1.3.2.1

Q_i = Force Effect (Moment or Shear) "

f = Resistance Factor "

R_n = Nominal Resistance "

R_r = Factored Resistance "

Service limit state

Service limit state shall be taken as restriction on stress, deformation and crack width under regular service conditions. LRFD 1.3.2.2

Load combinations and load factors

The Total Factored Force Effect shall be taken as:

$$Q = \sum \gamma_i Q_i$$ LFRD 3.4.1-1

Where:

g_i = Load Factors specified in Tables 1 & 2

Q_i = Force Effects from loads specified in LRFD

Strength-I load combination relating to the normal vehicle use of the bridge without wind. LRFD 3.4.1

Service-I load combination relating to the normal operational use of the bridge. "

Service-III load combination relating only to tension in prestressed concrete structures with the objective of crack control. "

$$Q_{Strength-I} = \gamma_{DC} DC + \gamma_{DW} DW + 1.75(LL + IM)$$ LRFD Tables 3.4.1-1 & 2

$Q_{Service-I} = 1.0\ (DC + DW) + 1.0\ (LL + IM)$ "

$Q_{Service-III} = 1.0\ (DC + DW) + 0.8\ (LL + IM)$ "

Effects due to shrinkage and creep are not considered. BDM 5.6.2

7 Vehicular Live Load LRFD 3.6.1.2

Design vehicular live load LRFD 3.6.1.2.1

Design live load designated as HL-93 shall be taken as:

LL = [Truck or tandem] (1 + IM) + Lane

Single Span Length =		58.00	ft		
HS-20 Truck Axles	32.00	32.00	8.00	kips	LRFD 3.6.1.2.2
HS-20 Truck Axle Spacing		14.00	14.00	ft	"
Tandem Truck Axles	25.00	25.00	kips		LRFD 3.6.1.2.3
Tandem Truck Axle Spacing		4.00	ft		"
Lane load density, w_L	0.64	k/ft			LRFD 3.6.1.2.4

Maximum live load force effect LRFD5.8.2.9

Max Shear, V_{max}, occurs at the horizontal distance of d_v from the face of support where d_v is the effective depth between the tensile and compressive resultant forces in the member and is ≥ **Max [.72 h or .9de].** LRFD5.8.3.2, & BDM 5.2.4-6

Max Moment, Mmax, occurs near midspan (CL) underneath the nearest concentrated load (P1) when that load is the same distance to midspan as the center of gravity (+ CG) is to midspan. Use the Truck or Tandem (Near Midspan) and the Lane (At Midspan) maximum moments together to be conservative.

So the	**HL-93 Live Load, LL = HS-20 Truck(1+IM)+Lane Load Governs**					
Near Center line						
Mmax =	**770.759**	**ft-kips**	**Corresponding V@Mmax =**	**25.10**	**kips**	
At dv						
Vmax =	**58.67**	**kips**	**Corresponding M@Vmax =**	**82.35**	**ft-kips**	LRFD 5.8.3.2
Lane Loading						
M@dv =	**25.4199**	**ft-kips**	**Corresponding V@dv =**	**17.66**	**kips**	
M@CL	**269.12**	**ft-kips**	**Corresponding V@CL =**	**0.00**	**Kips**	

Dynamic load allowance (Impact, IM)

LRFD 3.6.2.1

The static effect of Design Truck LL shall be increased by the following percentage : IM = 33% For bridge components (girder) LRFD Table 3.6.2.1-1

	At dv	3'	6'	9'	At CL	
M(LL+IM)=	134.9	279.0	522.5	730.5	1294.2	k-ft
V(LL+IM)=	95.7	92.0	85.2	78.3	32.5	**kips**

Distribution of Live Load, Df_i (Beam Slab Bridges)

LRFD 4.6.2.2

For Multibeam deck bridges with conditions as follows, the approximate method of live load distribution applies with the following conditions :

Width of deck is constant	LRFD 4.6.2.2.1
Number of Beams,	"
Beams are parallel $N_b \geq 4$	"
Beams have approximately the same stiffness	"
Roadway overhang, $d_e \leq 3.0\,ft$	"
Curvature in plane is less than 12 degree	"
X-section is one consistent with one listed in LRFD Table 4.6.2.2.1-1	"

The multiple presence factor shall not be applied in conjunction with approximate load distribution except for exterior beams. LRFD 3.6.1.1.2

The typical x-section **g** applies to voided and solid slabs w P.T. the composite deck makes the section significantly connected to act as a unit. LRFD Table 4.6.2.2.1-1

Distribution Factor for Moment Interior Girder, DF_{MInt}

LRFD 4.6.2.2.2b

For Multibeam deck bridges within the range of applicability and conditions as follows, the approximate method of live load distribution applies :

Range of applicability:	Width of beam (b),	$35 \leq$	48	≤ 60 in
	Span length (L),	$20 \leq$	58.00	≤ 120 ft
	Number of Beams (N_b),	$5 \leq$	10.00	≤ 20
	$k = 2.5\,N_b^{-0.2} \geq 1.5 =$		1.58	
	$Df_i = k(b/305)^{0.6}(b/12L)^{0.2}(I/J)^{0.06} =$		0.301	

Skew Reduction Factor for Moments

Range of applicability: Skew (q_{skew}), $0 \leq$ 0.00 $\leq 60^o$ LRFD 4.6.2.2.2e-1

if θ_{skew} is $\geq 60^o$ then use $\theta_{skew} = 60^o$ "

Reduction Factor = 1.05 - 0.25 tan(q) $\leq$ 1.0 "

Reduction Factor = 1.000 "

Moment Distribution Factor for Skewed Interior girder,

DF_{MInt} = 0.301

Moment Distribution Factor for Exterior girder, DF_{MExt} LRFD 4.6.2.2.2d

For Multibeam deck bridges within the range of applicability and conditions as follows, the approximate method of live load distribution applies : LRFD 4.6.2.2.1

$DF_{MExt} = e \times DF_{MInt}$

Where Skew Reduction Factor is included in DF_{MInt} and Correction Factor LRFD Table 4.6.2.2.2d-1

$$e = 1.04 + \frac{d_e}{25} \geq 1.0$$ "

barrier footprint = 18.50 in LRFD 4.6.2.2.2d

de = 2.00 ft

e = 1.12

Moment Distribution Factor for Skewed Exterior Girder,

DF_{MExt} = 0.337

Shear Distribution Factors

Shear Distribution Factor for Interior Girder, DF_{VInt} LRFD 4.6.2.2.3a

For Multibeam deck bridges within the range of applicability and conditions as follows, the approximate method of live load distribution applies :

Range of applicability: Width of beam (b), 35 $\leq$ 48 $\leq$ 60 in LRFD Table 4.6.2.2.3a-1

Span length (L), 20 $\leq$ 58.00 $\leq$ 120 ft "

Number of Beams (N_b), 5 $\leq$ 10 $\leq$ 20 "

St Venant Torsional Inertia (J), 25000 $\leq$ 55820 $\leq$ 610000 in^4 "

Net Moment of Inertia (I_c), 40000 $\leq$ 45919 $\leq$ 610000 in^4 "

By substituting the above pre-determined values, the approximate live load distribution factor for shear may be taken as the greater of:

One design Lane Loaded:

$$DF_{VInt} = \left(\frac{b}{130L}\right)^{0.15}\left(\frac{I_c}{J}\right)^{0.05} = 0.447$$ LRFD Table 4.6.2.2.3a-1

Two or more Lanes Loaded:

$$DF_{VInt} = \left(\frac{b}{156}\right)^{0.4}\left(\frac{b}{12.0L}\right)^{0.1}\left(\frac{I_c}{J}\right)^{0.05}\left(\frac{b}{48}\right) = 0.456$$ "

Skew Reduction Factor for Shear

Range of applicability:	Skew ($q_{skew)}$,	$0 \leq$	0.00	$\leq 60^o$	LRFD Table 4.6.2.2.3c-1
	Span length (L),	$20 \leq$	58.00	≤ 120 ft	"
	Depth of beam or stringer (d),	$17 \leq$	18	≤ 60 in	"
	Width of beam (b),	$35 \leq$	48	≤ 60 in	"
	Number of Beams ($N_{b)}$,	$5 \leq$	10	≤ 20	"

$$RF_\theta = 1.0 + \frac{12.0L}{90d}\sqrt{\tan\theta} = \quad 1.000$$ "

Shear Distribution Factor for Skewed Interior Girder,

DF_{VInt} = 0.456

Shear Distribution Factor for Skewed Exterior Girder LRFD 4.6.2.2.3b

For Multibeam deck bridges within the range of applicability and conditions as follows, the approximate method of live load distribution applies : LRFD 4.6.2.2.1

Range of applicability:	Overhang, d_e =		2.00	≤ 2.0 ft	LRFD Table 4.6.2.2.3b-1
	Width of Beam (b),	$35 \leq$	48.00	≤ 60	"

One design lane loaded:

$$e = 1.25 + \frac{d_e}{20} \geq 1.0 = \quad 1.06$$ "

$DF_{VExt} = e \times DF_{VInt}$ "

Two or more lanes loaded:

48/b =	1	≤ 1.0		"

$$e = 1 + \left(\frac{d_e + b/12 - 2}{40}\right)^{0.5} \geq 1.0 = \quad 1.32$$ "

DFVExt = e x DFVInt (48/b) "

Shear Distribution Factor for Skewed Exterior Girder,

DF_{VExt} = 0.600

Table 7-2: Summary of Live Load Distribution Factors:

		Moment		Shear
Girder	Interior Girder	DF_{MInt} =	0.301	DF_{VInt} = 0.456
	Exterior Girder	DF_{MExt} =	0.337	DF_{VExt} = 0.600

Table 7-3: Distributed Live Load

Simple span	Moment, ft-kips				
	dv	3'	6'	9'	0.5 L
Interior Girder	40.63	84.01	157.34	219.98	389.72
Exterior Girder	45.51	94.09	176.22	246.38	436.49

Simple span	Shear, kips				
	dv	3'	6'	9'	0.5 L
Interior Girder	43.63	41.96	38.83	35.70	14.80
Exterior Girder	57.43	55.23	51.11	46.98	19.49

8 Computation of Stresses

Sign convention: + Tensile stress
- Compressive stress

Stresses due to Weight of Girder

LRFD 3.3.2

Unit weight girder, w_g = 0.72 k/ft

Transfer Length = d_b (60) = 36.00 in LRFD 5.11.4.1

$$V_G = w_G\left(\frac{L}{2} - x\right) =$$ AISC LRFD p 5-162

Table 8-1

	x (ft)	V_G (kips)
dv =	1.38	20.01
	3.00	18.84
	6.00	16.67
	9.00	14.49
mid-span =	29.00	0.00

$$M_G = \frac{w_G x}{2}(L - x) =$$ "

Table 8-2

	x (ft)	M_G (ft-kips)
dv =	1.38	28.31
	3.00	59.78
	6.00	113.03
	9.00	159.77
mid-span =	29	304.68

At Transfer Using Full Length of the Girder

$$V_G = w_G\left(\frac{L}{2} - x\right) =$$ "

Table 8-3

	x (ft)	V_G (kips)
dv =	1.80	20.01
	3.00	19.14
	6.00	16.97
	9.00	14.79
mid-span =	29.42	0.00

$$M_G = \frac{w_G x}{2}(L - x) =$$ AISC LRFD p 5-162

Table 8-4

	x (ft)	M_G (ft-kips)
dv =	1.80	37.13
	3.00	60.68
	6.00	114.84
	9.00	162.48
mid-span =	29.4167	313.50

Table 8-5: Stresses due to Girder Dead Load, s_G

	dv	3 ft	6 ft	9 ft	0.5 L
Top of girder ksi	-0.139	-0.293	-0.554	-0.784	-1.494
Bottom of girder ksi	0.139	0.293	0.554	0.784	1.494
Top of girder at transfer ksi	-0.182	-0.298	-0.563	-0.797	-1.537
Bottom of girder at transfer ksi	0.182	0.298	0.563	0.797	1.537

Concrete stresses due to Traffic Barrier (DC)

Weight of Traffic Barrier over three girders, w_{TB3G} = $\frac{w_{TB}}{3}$ = 0.17 k/ft BDM 5.6.2-B.2.d

$$V_{TB} = w_{TB}\left(\frac{L}{2} - x\right) =$$

Table 8-6

	x (ft)	V_{TB} (kips)
dv =	1.38	4.60
	3.00	4.33
	6.00	3.83
	9.00	3.33
mid-span =	29.00	0.00

$$M_{TB} = \frac{w_{TB}\,x}{2}(L - x) =$$

Table 8-7

	x (ft)	M_{TB} (ft-kips)
dv =	1.38	6.51
	3.00	13.75
	6.00	26.00
	9.00	36.75
mid-span =	29.00	70.08

Table 8-8: Stresses due to Traffic Barrier, s_{TB} Comp.

		dv	3 ft	6 ft	9 ft	0.5 L
Top of slab	ksi	-0.019	-0.039	-0.075	-0.105	-0.201
Top of girder	ksi	-0.010	-0.021	-0.041	-0.057	-0.109
Bottom of girder	ksi	0.020	0.043	0.082	0.115	0.220

Concrete stresses due to Concrete Deck and Legs (D+L)

Area of deck + Legs = 240.00 in^2

Extra Concrete from A dimension = 24.00 in^2

Total Deck = 264.00 in^2

Weight of Concrete Deck, w_{SIDL} = 0.29 k/ft

$$V_{D+L} = w_{D+L}\left(\frac{L}{2} - x\right) =$$

Table 8-9

	x (ft)	V_{D+L} (kips)
dv =	1.38	8.10
	3.00	7.63
	6.00	6.75
	9.00	5.87
mid-span =	29.00	0.00

$$M_{D+L} = \frac{w_{D+L}x}{2}(L-x) =$$

Table 8-10

	x (ft)	M_{SIDL} (ft-kips)
dv =	1.38	11.46
	3.00	24.20
	6.00	45.76
	9.00	64.68
mid-span =	29.00	123.35

Table 8-11: Stresses due to Deck and Legs, s_{DW}

		dv	3 ft	6 ft	9 ft	0.5 L
Top of girder	ksi	-0.056	-0.119	-0.224	-0.317	-0.605
Bottom of girder	ksi	0.056	0.119	0.224	0.317	0.605

Stresses in Girder due to LL+IM (composite section):

Table 8-12:

		dv	3 ft	6 ft	9 ft	0.5 L
Top of Slab	ksi	-0.131	-0.270	-0.506	-0.707	-1.252
Top of Girder	ksi	-0.071	-0.147	-0.275	-0.385	-0.682
Bottom of Girder	ksi	0.143	0.296	0.554	0.774	1.371

Summary of stresses at dv

Table 8-13:

Stresses, ksi	Top of girder	Bottom of girder	Top of slab @	Top of girder @	Bottom of girder @
Weight of Girder	-0.139	0.139			
Weight Traffic Barrier	--	--	-0.019	-0.010	0.020
Weight of Deck	-0.056	0.056			
Live Load plus Impact Service - I	--	--	-0.131	-0.071	0.143
Live Load plus Impact Service - III	--	--	-0.104	-0.057	0.114

Summary of stresses at Mid-Span

Table 8-14:

Stresses, ksi	Top of girder	Bottom of girder	Top of slab @	Top of girder @	Bottom of girder @
Weight of Girder	-1.494	1.494			
Weight Traffic Barrier	--	--	-0.201	-0.109	0.220
Weight of Deck	-0.605	0.605			
Live load plus impact Service - I	--	--	-1.252	-0.682	1.371
Live load plus impact Service - III	--	--	-1.002	-0.545	1.097

9 Approximate Evaluation of Pre-Stress Losses

LRFD 5.9.5

For Prestress losses in members constructed and prestressed in a single stage, relative to the stress immediately before transfer, in pretensioned members, with low relaxation strands, the **Total Lump Sum Losses** may be taken as:

$$\Delta f_{pT} = \Delta f_{pES} + \Delta f_{pLT}$$

LRFD 5.9.5.1

Time Dependent Losses

LRFD 5.9.5.3

For normal weight concrete pretensioned by low-relaxation strands, approximate lump-sum time dependent losses resulting from creep and shrinkage of concrete and relaxation of prestressing steel may be used as follows:

$$\Delta f_{pLT} = 10\frac{F_{pi}A_{ps}}{A_g}\gamma_h\gamma_{st} + 12\gamma_h\gamma_{st} + \Delta f_{pR} = \quad 19.53 \quad \text{ksi}$$

LRFD 5.9.5.3-1

$Y_h = 1.7\text{-}.01H = 0.9$ LRFD 5.9.5.3-2

$Y_{st} = 5/(1+fci) = 0.625$ LRFD 5.9.5.3-3

Losses due to elastic shortening should be added to time-dependent losses to determine the total losses.

Loss due to strand relaxation

$\Delta f_{pR} =$ 2.50 LRFD 5.9.5.3

Loss due to elastic shortening

$f_{cgp} =$ Stress due to prestressing and girder weight at Centroid of prestressing strands, at section of maximum moment LRFD 5.9.5.2.3a

Concrete stress at Centroid of prestressing

$P_i = N\ A_{ps}\ .7f_{pu} =$ 1148.4 kips BDM 5.1.4-A

$$f_{ps} = -\frac{P_i}{A_g} - \frac{P_i e^2}{I_g} = -2.86 \quad \text{ksi}$$

$$f_g = \frac{M_g e}{I_g} = 0.78 \quad \text{ksi}$$

$f_{cgp} = f_g + f_{ps} =$ -2.08 ksi BDM 5.1.4-3

Elastic shortening loss,

$$\Delta f_{pES} = \left(\frac{E_p}{E_{ci}}\right) f_{cgp} = \quad \mathbf{11.14} \quad \mathbf{ksi}$$

LRFD 5.9.5.2.3a-1

$\Delta f_{pT} = \Delta f_{pES} + \Delta f_{pLT} =$ **30.67** **ksi** LRFD 5.9.5.1-1

Above relaxation losses not added to Time Dependent Losses, but will be used for Service Limit State Total Transfer PS Losses, Section 10.

10 Stresses at Service Limit State

Stresses after elastic shortening and relaxation :

Force per strand $P / N = A_{ps}(f_{pbt}-Df_{pES}-\Delta_{fpR}) =$ 40.98 kips

Table 10-1:

	No. of strands	Force per Strand, kips	Total force	Eccent. in.	Moment in-kip
Bottom Strands	20	40.98	819.66	6.40	5246
Debonded Strands @ 3'	0	40.98	0.00	7.00	0
Debonded Strands @ 6'	2	40.98	81.97	7.00	574
Debonded Strands @ 9'	2	40.98	81.97	7.00	574
Top Strands	4	40.98	163.93	-6.00	-984
	dv	P (kips)=	984	Mp(in-k) =	4262
	3	P (kips)=	984	Mp(in-k) =	4262
	6	P (kips)=	984	Mp(in-k) =	4262
	9	P (kips)=	1066	Mp(in-k) =	4836
	mid	P (kips)=	1148	Mp(in-k) =	5410

Prestressing stress (using the full length of the girder)

	dv				mid-span
	1.40	3.00	6.00	9.00	29.00
$f_{p(top)} = -\frac{P}{A_c} + \frac{M_{ps}}{S_t}$ = ksi	0.28	0.28	0.28	0.39	0.51
$f_{p(bottom)} = -\frac{P}{A_c} - \frac{M_{ps}}{S_b}$ = ksi	-3.20	-3.20	-3.20	-3.56	-3.916

Stresses after Losses (noncomposite section)

Force per strand $P / N = A_{ps}(f_{pbt}-Df_{pT}) =$ 37.29 kips BDM 5.1.4-A.1

Table 10-2:

	No. of strands	Force per Strand, kips	Total force	Eccent. in.	Moment in-kip
Bottom Strands	20	37.29	745.74	6.40	4773
Debonded Strands @ 3'	0	37.29	0.00	7.00	0
Debonded Strands @ 6'	2	37.29	74.57	7.00	522
Debonded Strands @ 9'	2	37.29	74.57	7.00	522
Top Strands	4	37.29	149.15	-6.00	-895
	dv	P (kips)=	895	Mp(in-k) =	3878
	3	P (kips)=	894.89	Mp(in-k) =	3878
	6	P (kips)=	895	Mp(in-k) =	3878
	9	P (kips)=	969	Mp(in-k) =	4400
	mid	P (kips)=	1044	Mp(in-k) =	4922

Prestressing stress after all losses (noncomposite)

	dv	3.00	6.00	9	mid-span
$f_{p(top)} = -\frac{P}{A} + \frac{M_{ps}}{S_t}$ = ksi	0.26	0.26	0.26	0.36	0.46
$f_{p(bottom)} = -\frac{P}{A_c} - \frac{M_{ps}}{S_b}$ = ksi	-2.91	-2.91	-2.91	-3.24	-3.563

Summary of Stresses at Service Limit States

Table 10-3:

	dv	3'	6'	9'	mid-span	
Prestressing stress + self wt of girder (using full length of girder)						girder + ps
$f_{g(topDL+PS)}$ (ksi) =	0.10	-0.02	-0.28	-0.40	-1.03	
$f_{g(botDL+PS)}$ (ksi) =	-3.02	-2.91	-2.64	-2.76	-2.38	
Construction stress at top & bottom of girder (noncomposite)					gir + ps + deck	
$f_{g(topDL+PS)}$ =	0.06	-0.16	-0.52	-0.74	-1.64	
$f_{g(botDL+PS)}$ =	-2.72	-2.50	-2.14	-2.14	-1.46	
Stresses due to all loads plus prestressing :				gir+ps+deck+barr+(LL+im)		
$f_{g(topDL+LL+PS)}$ =	-0.02	-0.32	-0.84	-1.19	-2.43	
$f_{g(botDL+LL+PS)}$ =	-2.56	-2.16	-1.50	-1.25	0.13	
Stresses due to Transient loads and one-half of permanent loads plus prestressing: .5(gir+ps+deck+barr)+(LL+im)						
$f_{g[topLL+(1/2DL+PS)]}$ =	-0.05	-0.24	-0.56	-0.78	-1.56	
$f_{g[botLL+(1/2(DL+PS))]}$ =	-1.21	-0.93	-0.47	-0.24	0.75	
Stresses due at service III load combination:				gir+ps+deck+barr+.8(LL+im)		
$f_{g[bot.8*LL+(DL+PS)]}$ =	-2.58	-2.22	-1.61	-1.40	-0.15	

Tensile stress limit in areas without bonded reinforcement (at dv) :

$f_t = 0.0948 \sqrt{(f'_{ci})} \leq$ 0.200 ksi > 0.099 ksi BDM 5.2.3-B

Compressive stress limit in pretensioned components :

$f_{ci} = 0.60 f'_{ci}$ = -4.20 ksi > -3.02 ksi "

Compressive stress limit at service - I load combinations

BDM 5.2.3-B;

Due to permanent loads (DL + PS) :

$f_{comp.} = 0.45\ f'_c$ = -3.83 ksi "

Due to permanent loads and transient loads (DL + PS + LL):

$f_{comp.} = 0.60\ f'_c$ = -5.10 ksi "

Due to transient loads and one-half of permanent loads (LL + 1/2DL + 1/2PS):

$f_{comp.} = 0.40\ f'_c$ = -3.40 ksi "

Tensile stress limit at service - III load combination

f_{tens} = 0.00 ksi > -0.146 ksi "

Stresses at transfer

The prestressing force may be assumed to vary linearly from zero at free end to a maximum at transfer length, l_t.

$l_t = 60 \times d_{strand}/12$ = 3.00 ft = 36.00 in. LRFD 5.5.4.1

11 Strength Limit State

Strength limit state shall be considered to satisfy the requirements for strength and stability.

$$\eta \Sigma (\gamma i \, Qi) < \phi R_n = R_r$$ LRFD Eqn. 1.3.2.1-1

Resistance factors

ϕ =	0.90	Flexural in reinforced concrete	LRFD 5.5.4.2.1
ϕ =	1.00	Flexural in prestressed concrete	"
ϕ =	0.90	Shear	"
ϕ =	0.75	Axial Compression	"

Flexural forces

Strength - I load combination is to be considered for normal vehicular load without wind. LRFD 3.4.1

Load factors :

γ_{DC} =	1.25	Components and attachments (Girder + TB + Deck)	LRFD TABLE 3.4.1-1
γ_{DW} =	1.50	Wearing surface (SIDL or ACP)	"
γ_{LL} =	1.75	Vehicular load (LL + Impact)	"

Flexural moment = 1.0 [1.25 DC + 1.5 DW + 1.75 (LL+IM)]

M_u = 1386.5 ft.-kips

Checked using QConBridge program, QConBridge 101-145MuChk.qcb Report p 4of 5

M_u =	**200.0**	**ft.-kips**	**NG Mu No Check**

Flexural resistance

LRFD 5.7.3

For practical design an equivalent rectangular compressive stress distribution of 0.85 f'_c overall depth of $a = b_1 c$ may be considered. LRFD 5.7.2.2

β_1 = 0.65 for f'_c = 8.5 ksi "

The average stress in prestressing strands, f_{ps}, may be taken as: LRFD 5.7.3

$$f_{ps} = f_{pu}\left(1 - k\frac{c}{d_p}\right)$$ LRFD 5.7.3.1.1-1

$$k = 2\left(1.04 - \frac{f_{py}}{f_{pu}}\right) = 0.28$$ LRFD 5.7.3.1.1-2

Location of neutral axis of composite transformed section :

For rectangular section without mild reinforcement :

$$c = \frac{A_{ps} f_{pu} + A_s f_y + A'_s f'_y}{0.85 f'_c \beta_1 b + k A_{ps} \frac{f_{pu}}{d_p}}$$ LRFD 5.7.3.1.1-4

$A_s = A'_s$ =	0.00	$in.^2$	with no partial prestressing considered
A_{ps} =	6.08	$in.^2$	Area prestressing strands
d_p =	18.71	in.	Distance from extreme compression fiber to Centroid of prestressing strands.
c1 =	9.156	in	

Deck Thickness + Top Flange = 9.50 in **OK for rectangular section**

For T-section without mild reinforcement :

$$c = \frac{A_{ps} f_{pu} + A_s f_y + A_s' f_y' - 0.85 f_c' (b - b_w) h_f}{0.85 f_c' \beta_1 b_w + k A_{ps} \frac{f_{pu}}{d_p}}$$ LRFD 5.7.3.1.1-3

bwe = 21.00 in
h_f = 9.50 in
c2 = 6.67 in

c = 9.156 in
a = β_1 c = 5.95 in < t_f = 9.50 in. LRFD 5.7.3.2.2

Average stress in prestressing steel :

$$f_{ps} = f_{pu}\left(1 - k\frac{c}{d_p}\right) = 233.0 \text{ ksi.}$$ LRFD 5.7.3.1.1-1

Tensile stress limit at strength limit state, f_{pu} = 270.0 ksi LRFD Table 5.4.4.1-2

Nominal flexural resistance

LRFD 5.7.3.2

Rectangular:

$$M_n = A_{ps} f_{ps}\left(d_p - \frac{a}{2}\right) = 1857 \text{ ft.-kips}$$ LRFD 5.7.3.2.2-1

T-shaped:

$$M_n = A_{ps} f_{ps}\left(d_p - \frac{a}{2}\right) + 0.85 f_c' (b - b_w) h_f (a/2 - h_f/2) =$$ "

1583 ft.-kips

M_n = 1857 ft.-kips

Flexural resistance, $M_r = \Phi M_n$ = 1857 > M_u = 1386 ft.-kips LRFD 5.7.3.2.1-1

Minimum reinforcement

LRFD 5.7.3.3.2

The amount of prestressing and non-prestressing steel shall be adequate to develop flexural resistance greater than or equal to the least 1.2 times the cracking moment or 1.33 times the factored moment required by Strength Limit State 1. "

Flexural resistance,

Mr = Φ Mn ≥ The Lesser of : $1.2M_{cr}$ = 613.4 ft-kips **governs**
$1.33M_u$ = 1844.0 ft-kips

$$M_{cr}^* = S_c\left(f_r + f_{pe}\right) - M_{d/nc}\left(\frac{S_c}{S_b} - 1\right)$$: $S_c f_r$ = 222.71 ft-kips LRFD 5.7.3.3.2-1

f_{pe} = -3.56 Stress at extreme fiber due to prestressing LRFD 5.4.2.6
M_{cr} = 511 ft.-kips
M_r = 1857 >1.2 Mcr = 613.4 ft.-kips LRFD 5.7.3.3.2

Development of prestressing strand

Pretension strand shall be bonded beyond the critical section for a development length taken as : 5.11.4.2

$$l_d \geq K\left(f_{ps} - \frac{2}{3} f_{pe}\right) d_b \qquad K = 1.0 \qquad \text{LRFD 5.11.4.2-1}$$

f_{ps} = 233.01 ksi
f_{pe} = 171.83 ksi
d_b = 0.60 in.

$l_d \geq$ 5.92 ft

l_d = 5.92 ft < 1/2 Span L/2 = 29.00 **OK developed**

12 Shear Design

Design procedure

The shear design of prestressed members shall be based on the general procedure of AASHTO - LRFD Bridge Design Specifications article 5.8.3.4.2 using the Modified Compression Field Theory. WSDOT Design Memo LRFD Shear Design, 3/19/02

Shear design for prestressed girder will follow the (replacement) flow chart for LRFD Figure C.5.8.3.4.2-5. This procedure eliminates the need for q angle and b factor iterations. WSDOT Design Memo, Shear Design 6/18/01

Effective Web Width, b_v, and Effective Shear Depth, d_v LRFD 5.8.2.9

Effective web width shall be taken as the minimum web width, measured parallel to the neutral axis, between the resultants of the compressive and tensile forces due to flexure "

b_v = Net Web = Width - Voids "
b_v = 21.0 in.

Effective shear depth shall be taken as the distance between resultant of tensile and compressive forces due to flexure but it need not to be taken less than the greater of : 0.9de OR 0.72h. "

$d_v = d_e - a/2$ = 15.7 in. "
$d_v = 0.9de$ = 16.8 in. **governs** "
$d_v = 0.72h$ = 16.6 in. "

use d_v = 16.8 or 1.40 ft

Component of Prestressing Force in Direction of Shear Force, V_p LRFD 5.8.3.3

The prestressing in PCPS Slabs are horizontal only, there is no vertical component

V_p = 0.00 kips

Shear Stress Ratio

Where the Shear Stress (ksi) on the concrete is,

$$v_u = \frac{V_u - \phi V_p}{\phi b_v d_v} = \quad 0.444 \quad \text{ksi}$$ LRFD 5.8.2.9-1

$$\frac{v_u}{f_c'} = \quad \mathbf{0.0522}$$ LRFD Figure C.5.8.3.4.2-5

Where the

Factored shear force

$\mathbf{V_u = S\ (\ h_i\ gi\ V_i\ )}$ LRFD 3.4.1-1

$\mathbf{h_i}$ =	1.00	Limit state factor for any ordinary structure	LRFD TABLES 3.4.1-1 & 3.4.1-2
$\mathbf{g_{DC}}$ =	1.25	Components and attachments (Girder + TB + Deck)	"
$\mathbf{g_{DW}}$ =	1.50	Wearing surface (SIDL or ACP)	"
$\mathbf{g_{LL+IM}}$ =	1.75	Vehicular load (LL + Impact)	"

Girder, V_g =	20.0	kips
Traffic Barrier, V_{tb} =	4.6	kips
Deck + Legs, V_{D+L} =	8.1	kips
V_{DC} =	32.7	kips
V_{LL+IM} x DF_{VExt} =	57.4	kips

Shear force effect,

$V_u = 1.00(1.25\ V_{DC} + 1.5\ V_{DW} + 1.75\ V_{LL+IM})$

$\mathbf{V_u =}$ **141.36** **kips**

$\mathbf{f_{po}}$

If the (critical) section (for shear) is within the transfer length of any (prestress) strands, calculate the effective value of f_{po}, the parameter taken as modulus of elasticity of prestressing tendons multiplied by the locked in difference in strain between the prestressing tendons and the surrounding concrete. LRFD Figure C.5.8.3.4.2-5

$f_{po} = 0.70 f_{pu}$ LRFD 5.8.3.4.2

$$f_{po} = \left[\frac{x + d_v}{l_t}\right] 0.70 f_{pu}$$ **governs, dv is within the transfer length of the prestressed strands** "

Where the distance between the edge of girder (or beginning of prestress) and the CL of Bearing (BRG)

x = 5.00 in.

accounting for bridge skew gives a long. distance from the face of girder as,

x = 5.00 in.

$\mathbf{f_{po} =}$ **114.68** **ksi**

Factored Moment

Where: **Factored moment** is not to be taken less than $V_u d_v$ LRFD 5.8.3.4.2

$M_u = \Sigma (\eta_i \gamma i M_i)$ LRFD 1.3.2.1-1

Ultimate moment at d_v from support, M_u

Girder, M_g =	28.8	ft-kips
Traffic Barrier, M_{tb} =	6.6	ft-kips
Deck + Legs, M_{D+L} =	11.7	ft-kips
M_{DC} =	47.0	ft-kips
M_{LL+IM} x DF_{MExt} =	45.5	ft-kips

Moment Force Effect,

$M_u = 1.00(1.25M_{DC} + 1.50M_{DW} + 1.75M_{LL+IM})$ LRFD TABLE 3.4.1-1

M_u = 138.5 ft-kips = 1661.5 in - kips

Check which value governs:

$V_u d_v$ = 2381.0 in - kips **governs**

M_u = 1661.5 in - kips

Longitudinal Strain (Flexural Tension)

WSDOT Design Memo Shear Design, 6/18/2001 & LRFD 5.8.3.4.2-1

The section contains at least the minimum transverse reinforcement as specified in Article 5.8.2.5. Longitudinal strain in the "web reinforcement" on the flexural tension side of the member,

$$\varepsilon_x = \frac{\left[\frac{M_u}{d_v} + 0.5N_u + \left|V_u - V_p\right| - A_{ps} f_{po}\right]}{2(E_s A_s + E_p A_{ps})} \le 0.002$$

Applied Factored Axial forces,

N_u = 0.00 kips

Factored Shear,

V_u = 141.36 kips

Vertical Component of Prestress Forces,

V_p = 0.00

Area of prestressing steel on the flexural tension side of the member,

$A_{ps(T)} = N_{bb}$ x A_{ps} = 4.34 $in.^2$

Prestress/Concrete Modulus of Elasticity Parameter

f_{po} = 114.68 ksi

Modulus of Elasticity of Mild Reinforcement,

E_s = 29000 ksi

Area of Mild Reinforcement in flexural tension side of the member,

$A_{s(bottom)} = n_{s(bottom)} A_s$

Where there are 4 No. 4 bars BDM fig. 5-A-XX

$A_{s(bottom)}$ = 0.80 $in.^2$

Modulus of Elasticity of Prestress Strands,

E_p = 28500 ksi

Substitution gives,

ε_x = -0.0007317 **< 0, so use the following Equation 3:** LRFD 5.8.3.4.2-1

If the value of e_x from LRFD Equations 5.8.3.4.2-1 or 2 is negative, the strain shall be taken as:

$$\varepsilon_x = \frac{\left[\frac{M_u}{d_v} + 0.5N_u + (V_u - V_p) - A_{ps}f_{po}\right]}{2(E_cA_c + E_sA_s + E_pA_{ps})}$$

WSDOT Design Memo Shear Design, 6/18/2001 & LRFD Eqn. 5.8.3.4.2-**3**

Where: Modulus of Elasticity of Concrete,

E_c = 5871.1 ksi

Area of concrete on the flexural tension side of the member,

A_c = 216.00 $in.^2$

Substitution gives,

e_x = -0.0000760 **Equation 3 Governs**

e_x = -0.0000760

Determination of β and θ

Shear Stress Ratio of:	0.052	Is a value just	≤	0.075
1000 x the Long. Strain:	-0.076	Is a value just	≤	-0.05

From Table 1: **θ = 21.00 deg.**, **β = 4.10**

LRFD Table 5.8.3.4.2-1 & See Theta and Beta Worksheet

Shear strength

LRFD 5.8.3.3

$V_r = fV_n$ LRFD 1.3.2.1-1

Nominal shear strength shall be taken as:

$V_n = V_c + V_s + V_p$ LRFD 5.8.3.3-1

Shear resistance provided by concrete :

$$V_c = 0.0316\beta\sqrt{f_c'}b_vd_v$$ LRFD 5.8.3.3-3

Shear taken by shear reinforcements :

$V_s = V_n - V_c - V_p$

f = 0.90 for shear LRFD 5.5.4.2

V_n = Nominal shear strength

Required shear strength

LRFD 5.8.3.3

Nominal shear strength shall be taken as the lesser of :

$V_n = V_c + V_si + V_p$ = 221.4 kips **governs** LRFD 5.8.3.3-1

$V_n = 0.25f'_cb_vd_v + V_p$ = 751.6 kips LRFD 5.8.3.3-2

Initial Shear from stirrups, based on 12" spacing of #4 bars

$$V_s i = \frac{A_v f_y d_v \cot\theta}{s_{gov}} = 87.75 \quad \text{kips}$$ LRFD C5.8.3.3-1

Shear resistance provided by concrete :

$$V_c = 0.0316\beta\sqrt{f_c'}\,b_v d_v = 133.6 \quad \text{kips}$$ LRFD 5.8.3.3-3

Shear taken by shear reinforcement:

$V_{sreq} = V_u/\phi - V_c - V_p =$ 23.5 kips LRFD 5.8.3.3-1

Spacing of shear reinforcements :

Try 2 legs of # **4** Av = 0.40 $in.^2$

Required Spacing, $s_{req'd} = \frac{A_v f_y d_v \cot\theta}{V_s} = 44.87$ in. LRFD C5.8.3.3-1

Maximum spacing of shear reinforcement

if $v_u < 0.125\ f'_c$ then $s_{max} = 0.8\ dv <$ ~~24 in.~~ 18 in. LRFD 5.8.2.7-1

Maximum spacing of shear reinforcement, WSDOT Practice = 18.00 in

if $v_u >= 0.125\ f'c$ then $s < 0.4\ dv < 12$ in.

$v_u =$ 0.444 ksi LRFD 5.8.2.7-2

0.125 f'c = 1.063 ksi > v_u = 0.444 ksi

Maximum spacing, s_{max} =	**13.5**	**in.**	**Governs spacing**
Governing spacing, s_{gov} =	**13.0**	**in.**	

$A_{v(provided)} =$ 0.40 $in.^2$ Assuming two #4 legs

$$V_s = \frac{A_v f_y d_v \cot\theta}{s_{gov}} = 81.00 \quad \text{kips}$$ LRFD C5.8.3.3-1

Shear reinforcement is required if : $0.5f(V_c+V_p) < V_u$ LRFD 5.8.2.4-1

$0.5f(V_c+V_p) =$ 60.1 < Vu = 141.4 kips

Yes, Shear/Transverse Reinf. Is Required

Minimum shear reinforcement

LRFD 5.8.2.5

When shear reinforcement is required by design, the area of steel provided,

$$A_{v(provided)} \geq 0.0316\sqrt{f_c'}\,\frac{b_v s_{gov}}{f_y}$$ Use Spacing: 12.00 in ≤ 13.0 in LRFD 5.8.2.5-1

OK

where :

s = 12.0 in.

Required Area of Steel,

$$0.0316\sqrt{f_c'}\,\frac{b_v s_{gov}}{f_y} = 0.39 \quad in.^2$$

0.40 > 0.39 $in.^2$ **OK for Min. Transverse Reinf.**

Longitudinal reinforcement

LRFD 5.8.3.5

Longitudinal reinforcement shall be provided so that at each section the following equations are satisfied :

$$A_s f_y + A_{ps} f_{ps}\left(\frac{d_v}{l_t}\right) \geq T = \frac{M_u}{d_v \phi} + \frac{0.5N_u}{\phi} + \left(\frac{V_u}{\phi} - 0.5V_s - V_p\right)\cot\theta$$ LRFD 5.8.3.5-1

A_s =	0.80	in^2		BDM fig. 5-A-XX
f_y =	60.00	ksi		
A_{ps} =	4.34	in^2	Area of prestressing steel on the flexural tension side of the member (w/o unbonded)	
f_{ps} =	233.01	ksi	f_{ps} multiplied by d_v/l_t ratio to account for lack of prestress development	
d_v =	16.84	in.		
l_t =	3.00	ft =	36.00 in	
M_u =	198.4	ft-kips		
f =	1.00		Flexural in prestressed concrete	LRFD 5.5.4.2
f =	0.90		Shear	"
f =	0.75		Axial Compression	"
N_u =	0.00			
V_u =	141.36	kips		
V_s =	81.00	kips		
V_p =	0.00	kips		
q =	21.00	degree		

by substitution:

521.135 ≥ 445.0 kips **OK for Longitudinal Reinforcement**

13 Deflection and Camber

LRFD 5.7.3.6.2

Let downward Deflection be Positive +

Let upward Deflection, Camber, be Negative -

Deflection due to prestressing forces at Transfer

Deflection due to bottom strands is computed from a combination of fully bonded strands and the partially bonded or "debonded" strands which are sleeved at the ends of the girder. Each type has their own eccentricity.

$$\Delta ps_{bot.} = \Delta ps_{bb} + \Delta ps_{db}$$

$$\Delta ps_{bb} + \Delta ps_{db} = \left(P_{bb} e_{bb} + k_{db} P_{db} e_{db}\right)\frac{L^2}{8E_{ci} I_c}$$

Force and eccentricity due to the bonded bottom prestress strands are:

P_{bb} = 819.66 kips e_{bb} = 6.40 in

Reduction factor for the partially bonded or debonded strands

$$k_{db} = \frac{L - 2l_{db}}{L} = 0.847$$

The average sleeved length of the debonded strands,

l_{db} = 4.5 ft = 54.0 in

Force and eccentricity due to the debonded bottom prestress strands are:

P_{db} = 0.00 kips e_{db} = 7.00 in

$Dps_{bot.}$ = -2.786 in. upward

Deflection due to top strands is computed from :

$$\Delta ps_{top} = \frac{P_t e_t L^2}{8 E_{ci} I_c}$$

Prestressing force and eccentricity of top strands.

P_t = 163.9 kips e_t = -6.00 in.

Δps_{top} = 0.522 in. downward

Total deflection due to prestressing :

$\Sigma \Delta_{ps}$ = -2.79 + 0.52 = -2.263 in. upward

Deflection due to weight of Girder

$$\Delta_g = \frac{5 w_g L^4}{384 E_{ci} I_c} = 1.66 \text{ in. downward}$$

AISC LRFD page 4-190

Deflection due to weight of Traffic Barrier TB

$$\Delta_{tb} = \frac{5 w_{tb(3G)} L^4}{384 E_c I_c} = .18 \text{ in. downward}$"

Deflection due to weight of Deck and Legs

$$\Delta_{SIDL} = \frac{5 w_{SIDL} L^4}{384 E_c I_c} = .58 \text{ in. downward}$"

Deflection (Camber) at transfer, C_i

Deflection accounted at transfer are due to prestressing and weight of girder :

At transfer : $\sum \Delta i$ = -2.26 + 1.66 = -0.60 in

Creep Coefficients

$C_F = -[(\Delta_{ps}+\Delta_g)(\psi_{(t,ti)}+1)]$

Creep Coefficient :

$\Psi_{(t,ti)} = 1.9\ k_{vs}k_{hc}k_f k_{ta} t_i^{-0.118}$ LRFD 5.4.2.3.2-1

$k_{vs} = 1.45 - .13(v/s) \geq 1.0$ LRFD 5.4.2.3.2-2

$k_{hc} = 1.56 - .008H$ H = **80.00** average humidity (AASHTO fig. 5.4.2.3.3-1) LRFD 5.4.2.3.2-3

$k_f = 5/(1+f'_{ci})$ LRFD 5.4.2.3.2-4

$k_{td} = t/(61-4*f'_{ci}+t)$ LRFD 5.4.2.3.2-5

V/S = 4.03 in Void end from end of girder = 15 in. LRFD 5.4.2.3.2

Table 13-1:

	t_i	t	k_{vs}	khc	k_f	k_{td}	$\Psi_{(t,ti)}$
$\Psi_{(7,30)}$	7.00	30.00	1.00	0.92	0.63	0.48	0.41
$\Psi_{(30,40)}$	30.00	40.00	1.00	0.92	0.63	0.55	0.40
$\Psi_{(7,40)}$	7.00	40.00	1.00	0.92	0.63	0.55	0.48
$\Psi_{(7,90)}$	7.00	90.00	1.00	0.92	0.63	0.73	0.64
$\Psi_{(90,120)}$	90.00	120.00	1.00	0.92	0.63	0.78	0.50
$\Psi_{(7,120)}$	7.00	120.00	1.00	0.92	0.63	0.78	0.68

Assume 1 Day of accelerated cure by radiant heat or steam. 1 Day accelerated cure = 7 normal Days of cure. Age of Concrete when load is initially applied, LRFD 5.4.2.3.2

Final Deflections Due to All Loads and Creep

"D" Parameters for Minimum Timing

$\Delta cr.min = \Psi(7,40)*(\Delta psbot+\Delta pstop+\Delta g) =$ -0.28 in

$D40 = \Delta psbot+\Delta pstop+\Delta g+\Delta cr.min =$ -0.88 in

"D" Parameters for Maximum Timing

$\Delta cr.max = \Psi(7,120)*(\Delta psbot+\Delta pstop+\Delta g) =$ -0.41 in

$D120 = \Delta psbot+\Delta pstop+\Delta g+\Delta cr.max =$ -1.01 in

Elastic deflection due to slab and Traffic barrier

$C = \Delta sidl+\Delta tb =$ 0.76 in

Excess girder camber

Δexcess = D40 + C =	-0.13	in
Δexcess = D120 + C =	-0.25	in

Time period to display (40, 120) = 40.00 Deck thickness at Piers = **5.13** in.

Fig. 13-1 Time Vs. Deflection Curve

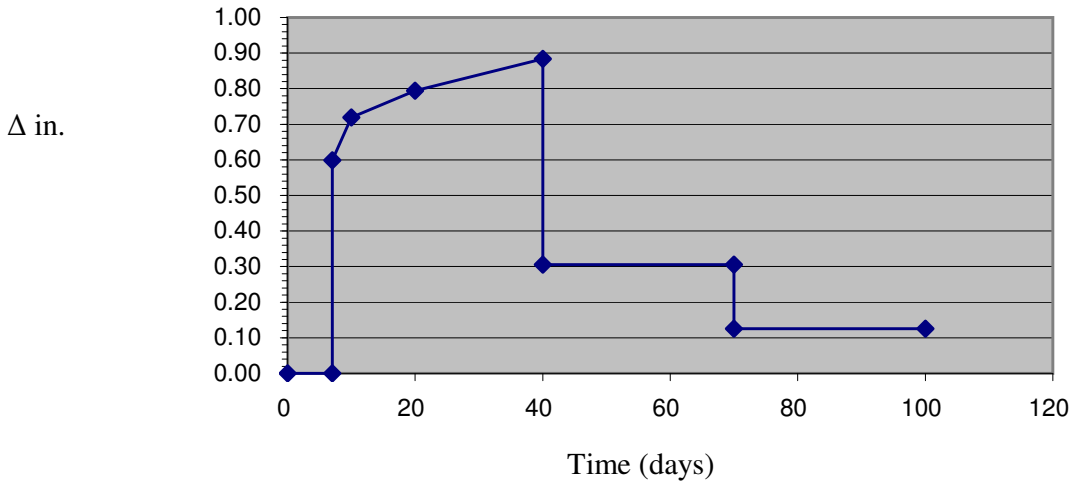

Design Specifications:

AASHTO LRFD Bridge Design Specifications 4th Edition dated 2007 and interims through 2008.

Strand for Positive EQ Moment:

For girders made continuous for live load, extended bottom prestress strands are used to carry positive EQ load, creep, and other restrained moments from one span to another.

Strands used for this purpose must be developed in the short distance between the two girder ends. The strand end anchorage device used, per WSDOT Standard Plan, is a 2'-0" strand extension with strand chuck and steel anchor plate.

The number of strands to be extended cannot exceed the number of straight strands available in the girder and shall not be less than four.

The design moment at the center of gravity of superstructure is calculated using the following:

$$M_{po}^{CG} = M_{po}^{top} + \frac{\left(M_{po}^{top} + M_{po}^{Base}\right)}{L_c} h$$

Where:

M_{po}^{top} = plastic overstrength moment at top of column, kip-ft.

M_{po}^{Base} = plastic overstrength moment at base of column, kip-ft.

h = distance from top of column to c.g. of superstructure, ft.

L_c = column clear height used to determine overstrength shear associated with the overstrength moments, ft.

This moment is resisted by the bent cap through torsion forces. The torsion in the bent cap is distributed into the superstructure based on the relative flexibility of the superstructure and the bent cap.

Hence, the superstructure does not resist column overstrength moments uniformly across the width. To account for this, an effective width approximation is used, where the maximum resistance per unit of superstructure width of the actual structure is distributed over an equivalent effective width to provide an equivalent resistance.

It has been suggested that for concrete bridges, with the exception of box girders and solid superstructure, this effective width should be calculated as follows:

$B_{eff} = D_c + D_s$

where:

D_c = diameter of column

D_s = depth of superstructure including cap beam

Based on the structural testing conducted at the University of California at San Diego La Jolla, California in the late 1990's (Holombo 2000), roughly two-thirds of the column plastic moment to be resisted by the two girders adjacent to the column (encompassed by the effective width) and the other one-third to be resisted by the non-adjacent girders.

Based on the effective width, the moment per girder line is calculated as follows:

adjacent girders (encompassed by the effective width):

$$M_{sei}^{Int} = \frac{2M_{po}^{CG}}{3N_g^{\text{int}}}$$

non-adjacent girders:

$$M_{sei}^{Ext} = \frac{M_{po}^{CG}}{3N_g^{ext}}$$

Seismic Moment:

if $M_{sei}^{Int} \geq M_{sei}^{Ext}$

$$M_{sei} = M_{sei}^{Int}$$

if $M_{sei}^{Int} < M_{sei}^{Ext}$

$$M_{sei} = \frac{M_{po}^{CG}}{N_g^{\text{int}} + N_g^{ext}}$$

where:

N_g^{int} = Number of girder encompassed by the effective width.

N_g^{ext} = Number of girder outside the effective width.

Number of extended straight strands needed to develop the required moment capacity at the end of girder is based on the yield strength of the strands.

$$N_{ps} = 12[M_{sei} \cdot K - M_{SIDL}] \cdot \frac{1}{0.9\phi A_{ps} f_{py} d}$$

where:

A_{ps} = area of each extended strand, in^2

f_{py} = yield strength of prestressing steel specified in LRFD Table 5.4.4.1-1

d = distance from top of slab to c.g. of extended strands, in.

M_{SIDL} = moment due to SIDL (traffic barrier, sidewalk, etc.) per girder

K = span moment distribution factor use maximum of (K1 and K2)

ϕ = flexural resistance factor

Assume EI is constant and Girders have fixed-fixed supports for both spans.

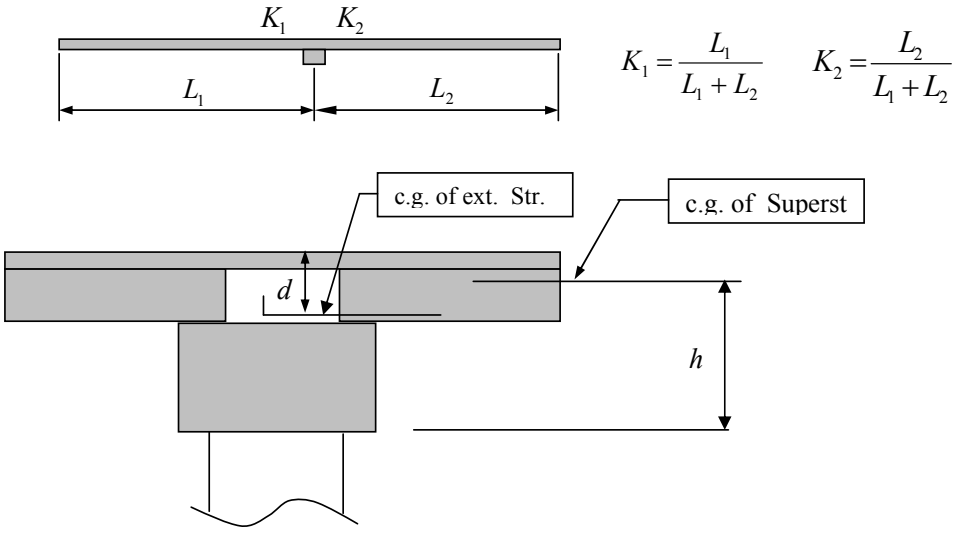

$$K_1 = \frac{L_1}{L_1 + L_2} \qquad K_2 = \frac{L_2}{L_1 + L_2}$$

References:

Holombo, J., M.J.N. Priestley, and F. Seible, "Continuity of Precast Prestressed Spliced-Girder Bridge Under Seismic Loads", PCI Journal, 45(2), 40-63, March-April, 2000.

Given:

D_c = 5.00 ft. diameter of column

D_s = 12.93 ft. depth of superstructure including cap beam

B_{eff} = 5 + 12.93 = 17.93 ft.

f'_c = 4.00 ksi, specified compressive strength of deck concrete, Class 4000D.

d_b = 0.6" nominal strand diameter =0.217 in^2

f_{pu} = 270 ksi specified tensile strength of prestressing strands. LRFD Table 5.4.4.1-1

f_{py} = 243 ksi ksi for low relaxation strand

ϕ = 1.00 resistance factor (LRFD C 1.3.2.1, for extreme event limit state)

N_g^{int} = 3 number of girders encompassed by the effective width

N_g^{ext} = 2 number of prestressed girders in the pier

GTYP = W83G H = 82.625" girder depth

A = 9.50 " "A" Dimension including 1/2" Integral W.S.

t_s = 7.50 " effective slab thickness (not including 1/2" Integral W.S.)

$Y_{t\ slab}$ = 36.86 " c.g. of superstructure to top of slab (see PGSuper output)

b = 81.00 " effective flange width (PGSuper Output & LRFD 4.6.2.6.1)

h = 116.64 " distance from top of column to c.g. of superstructure

L_1 = 176.63 ft. Span length of span 1. Factor = 1.33

L_2 = 180.00 ft. Span length of span 2. Factor = 1.00

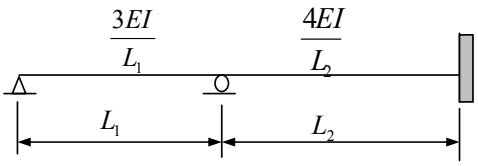

Far End Condition	
Pin	1.33
Fixed	1.00

L_c = 25.00 ft. column clear height used to determine overstrength shear associated with the overstrength moments, ft.

M_{po}^{top} = 16000.0 plastic overstrength moment at top of column, kip-ft

M_{po}^{Base} = 16500.0 plastic overstrength moment at base of column, kip-ft.

M_{SIDL} = 517.0 moment due to SIDL (traffic barrier, sidewalk, etc.) per girder, kip-ft (see QconBridge Output)

γ_P = 0.90

Design Steps:

Step 1:

Calculate the design moment at the center of gravity of superstructure

M_{po}^{CG} = 16000 + (16000 + 16500) / 25 * 116.64 / 12 = 28636 kip-ft

Step 2:

Calculate the design moment per girder.

M_{sei}^{Int} = 2/3 * 28636 / 3 = 6363.56 kip-ft

M_{sei}^{Ext} = 1/3 * 28636 / 2 = 4772.67 kip-ft

M_{sei}^{Avg} = 28636 / (3 + 2)= 5727.2 kip-ft = 6363.56 kip-ft.

L_1 = 234.92 ft. (Modified) K_1 = 180 / (234.92 + 180) = 0.434

L_2 = 180.00 ft. (Modified) K_2 = 234.92 / (234.92 + 180) = 0.566

K = 0.566

Design Moment per girder

M_{des} = 0.566 * 6363.56 - 0.9 * 517 = 3137.61 ft-kips per girder

Step 3:

Calculate the number of extended strand required

cs = 3.00" c.g. of extended strands to bottom of girder

d = 9.5 - 0.5 + 82.625 - 3 = 88.625 "

assume f_{py} = 243 ksi

Number of extended strand required =
12 * 3137.61/(0.9 * 1 * 0.217 * 243 * 88.625) = 9 strands

Use = N_{ps} 10 extend strands - Use even number of strands

Step 4:

Check moment capacity of extended strands

cs = 3.00" c.g. of extended strands to bottom of girder

Per LRFD 5.7.3.2 The factored flexural resistance

$M_r = \phi M_n$ $M_n = A_{ps} f_{py} (d_p - \frac{a}{2})$

where:

A_{ps} = area of prestressing steel, in^2. =10 * 0.217 = 2.17 in^2

d_p = distance from extreme compression fiber to the centroid of prestressing tendons (in.)

d_p = 9.5 - 0.5 + 82.625 - 3 = 88.625"

Assume rectangular behavior:

$$c = \frac{A_{ps} f_{py}}{0.85 f'_{ce} \beta_1 b}$$

$\beta_1 = 0.85$ for $f'_{ce} \le 4000\ psi$

$\beta_1 = 0.85 - 0.05 \frac{f'_{ce} - 4000}{1000} \ge 0.65$ for $f'_{ce} > 4000\ psi$

f_c = 4.00 ksi = 1.3 * 4 = 5.2 ksi = 0.79

c = 2.17 * 243/0.85 * 5.2 * 0.79 * 81 = 1.864 "

a = 0.79 * 1.864 = 1.473" depth of the equivalent stress block (in.)

M_n = 2.17 * 243 * (88.625 - 1.473/2)/12 = 3862.04 kip-ft.

M_r = 1 * 3862.04 = 3862.04 kip-ft. > = 3137.61 ft-kips OK

Problem Description: A wingwall with traffic barrier is to be checked for moment capacity at a vertical section at the abutment for a vehicular impact.

AASHTO LRFD Specifications Extreme Event-II Limit State (Test Level TL-4)

$L := 15ft$	Wingwall Length	
$h := 2.5ft$	Height of wingwall at end away from pier.	
$S := 2ft$	Traffic surcharge (given in height of soil above road). See LRFD Tables 3.11.6.4-1 and 3.11.6.4-2.	
$GroundSlope := 2$	to 1	
$W := 45 \cdot \frac{lbf}{ft^2 \cdot ft}$	Lateral Earth Pressure (equilivant fluid pressure per foot)	
$F_t := 54kip$	Transverse Collision Load	§ Table A13.2-1 LRFD AASHTO
$L_t := 3.5ft$	Collision Dist. Width	§ Table A13.2-1 LRFD AASHTO
$\gamma_{CT} := 1$	Collision Load Factor	§ Table 3.4.1-1 LRFD AASHTO
$\gamma_{EH} := 1.35$	Horizontal Earth Load Factor	§ Table 3.4.1-2 LRFD AASHTO
$\gamma_{LS} := 0.5$	Live Load Surcharge Load Factor for Extreme Event II	§ Table 3.4.1-2 LRFD AASHTO

Transverse Collision Force Moment Arm

$$MomentArm := L - \frac{L_t}{2} \qquad MomentArm = 13.25\,ft$$

Wall Height at Abutment

$$H := h + \left(\frac{L}{GroundSlope}\right) \qquad H = 10.00\,ft$$

Flexural Moment due to Collision Load and Earth Pressure

$$FlexuralMoment := \gamma_{CT} \cdot F_t \cdot MomentArm + \gamma_{EH} \cdot \frac{W \cdot L^2}{24} \cdot \left[3 \cdot h^2 + \left(H + 4 \cdot S \cdot \frac{\gamma_{LS}}{\gamma_{EH}}\right) \cdot (H + 2 \cdot h)\right]$$

$$FlexuralMoment = 836.92\,kip \cdot ft$$

$$M_u := \frac{FlexuralMoment}{H} \qquad M_u = 83.69 \frac{kip \cdot ft}{ft}$$

Problem Description: A wingwall with traffic barrier is to be checked for moment capacity at a vertical section at the abutment for a vehicular impact.

AASHTO LRFD Specifications Extreme Event-II Limit State (Test Level TL-4)

$L := 15ft$	Wingwall Length	
$h := 2.5ft$	Height of wingwall at end away from pier.	
$S := 2ft$	Traffic surcharge (given in height of soil above road). See LRFD Tables 3.11.6.4-1 and 3.11.6.4-2.	
$GroundSlope := 2$	to 1	
$W := 45 \cdot \frac{lbf}{ft^2 \cdot ft}$	Lateral Earth Pressure (equilivant fluid pressure per foot)	
$F_t := 54kip$	Transverse Collision Load	§ Table A13.2-1 LRFD AASHTO
$L_t := 3.5ft$	Collision Dist. Width	§ Table A13.2-1 LRFD AASHTO
$\gamma_{CT} := 1$	Collision Load Factor	§ Table 3.4.1-1 LRFD AASHTO
$\gamma_{EH} := 1.35$	Horizontal Earth Load Factor	§ Table 3.4.1-2 LRFD AASHTO
$\gamma_{LS} := 0.5$	Live Load Surcharge Load Factor for Extreme Event II	§ Table 3.4.1-2 LRFD AASHTO

Transverse Collision Force Moment Arm

$$MomentArm := L - \frac{L_t}{2} \qquad MomentArm = 13.25\,ft$$

Wall Height at Abutment

$$H := h + \left(\frac{L}{GroundSlope}\right) \qquad H = 10.00\,ft$$

Flexural Moment due to Collision Load and Earth Pressure

$$FlexuralMoment := \gamma_{CT} \cdot F_t \cdot MomentArm + \gamma_{EH} \cdot \frac{W \cdot L^2}{24} \cdot \left[3 \cdot h^2 + \left(H + 4 \cdot S \cdot \frac{\gamma_{LS}}{\gamma_{EH}}\right) \cdot (H + 2 \cdot h)\right]$$

$$FlexuralMoment = 836.92\,kip \cdot ft$$

$$M_u := \frac{FlexuralMoment}{H} \qquad M_u = 83.69 \frac{kip \cdot ft}{ft}$$

Define Units $ksi \equiv 1000 \cdot psi$ $kip \equiv 1000 \cdot lbf$ $kcf \equiv kip \cdot ft^{-3}$ $klf \equiv 1000 \cdot lbf \cdot ft^{-1}$

$MPa \equiv Pa \cdot 10^{6}$ $N \equiv 1 \cdot newton$ $kN \equiv 1000 \cdot N$

Find the flexural strength of a W83G girder made composite with a 7.50 in. thick cast-in-place deck, of which the top 0.50 in. is considered to be a sacrificial wearing surface. The girder spacing is 6.0 ft. To simplify the calculations, ignore the contribution of any non-prestressed reinforcing steel and the girder top flange. The girder configuration is shown in **Figure 1** with 70-0.6 in. diameter strands, and concrete strengths of 6000 psi in the deck and 15000 psi in the girder.

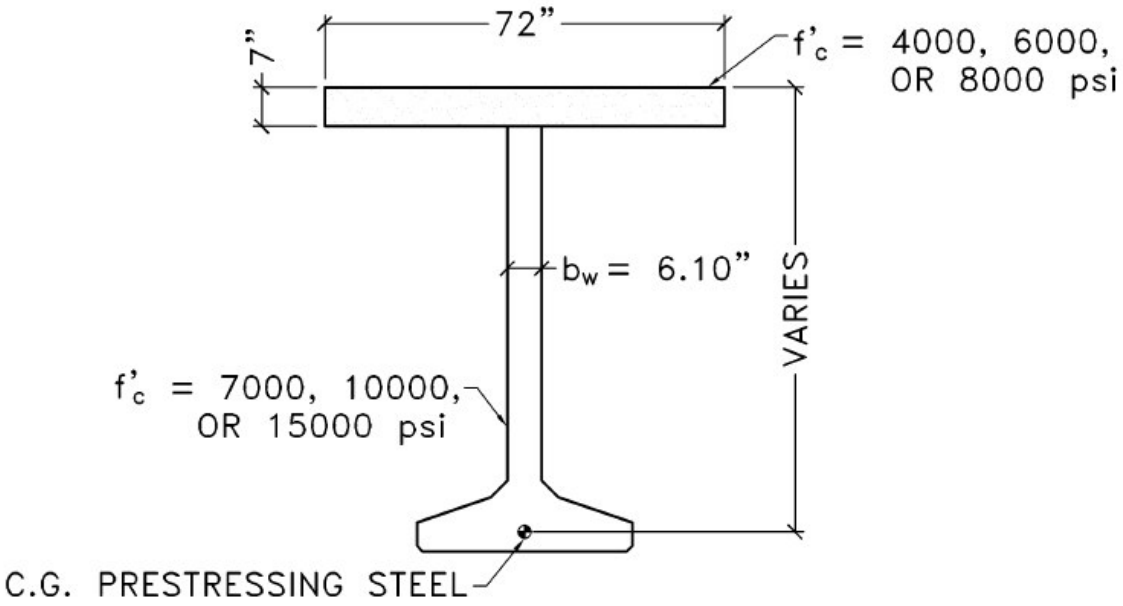

Figure 1

Bare W83G Bridge Girder Data

Depth of girder	h = 82.68 in.
Width of girder web	b_w = 6.10 in.
Area of prestressing steel	A_{ps} = 15.19 in.^{2}
Specified tensile strength of prestressing steel	f_{pu} = 270.00 ksi
Initial jacking stress	f_{pj} = 202.50 ksi
Effective prestress after all losses	f_{pe} = 148.00 ksi
Modulus of Elasticity of prestressing steel	E_p = 28,600 ksi

Design concrete strength f'_c = 15000 psi

Composite W83G Bridge Girder Data

Overall composite section depth H = 89.68 in.

Deck slab width b = 72.00 in.

Deck slab thickness t = 7.50 in.

Structural deck slab thickness h_f = 7.00 in.

Depth to centroid of prestressing steel d_p = 85.45 in.

Design concrete strength f'_c = 6000 psi

$$\varepsilon_{ps} = 0.003\left(\frac{d_p}{c} - 1\right) + \left(\frac{f_{pe}}{E_p}\right) = 0.003\left(\frac{85.45}{30.75} - 1\right) + \left(\frac{148.00}{28{,}600}\right)$$

$$f_{si} = \varepsilon_{ps}\left[887 + \frac{27{,}613}{\left(1 + \left(112.4\varepsilon_{ps}\right)^{7.36}\right)^{1/7.36}}\right] \leq$$

$$= (0.010511)\left[887 + \frac{27{,}613}{\left(1 + (112.4(0.010511))^{7.36}\right)^{1/7.36}}\right]$$

$$\sum A_{si}F_{si} = A_{ps}f_{si} = (15.19)(246.56) \quad a = \beta_{1(ave)}c = (0.719)(30.75)$$

$$\beta_{1(ave)} = \sum_j \left(f'_c A_c \beta_1\right)_j \Big/ \sum_j \left(f'_c A_c\right)_j = \frac{[(6)(7)(72)(0.75) + (15)(22.1-7)(6.10)(0.65)]}{[6(7)(72) + (15)(22.1-7)(6.10)]}$$

$$\sum F_{cj} = 0.85f'_{c(deck)}h_f b + 0.85f'_{c(girder)}\left(a - h_f\right)b_w$$
$$= 0.85(6)(7)(72) + 0.85(15)(22.10-7)(6.10)$$

$$M_n = 0.85f'_{c(deck)}h_f b\left(d_p - \frac{h_f}{2}\right) + 0.85f'_{c(girder)}\left(a - h_f\right)b_w\left(d_p - h_f - \frac{\left(a - h_f\right)}{2}\right)$$

$$= 0.85(6)(7)(72)\left(85.45 - \frac{7}{2}\right) + 0.85(15)(22.1-7)(6.10)\left(85.45 - 7 - \frac{(22.1-7)}{2}\right)$$

$$d_t = H - 2 = 89.68 - 2 \quad \phi = 0.5 + 0.3\left(\frac{d_t}{c} - 1\right) = 0.5 + 0.3\left(\frac{87.68}{30.75} - 1\right)$$

$$\phi M_n = 1.00(293{,}931)\ \varepsilon_{ps} = 0.003\left(\frac{d_p}{c} - 1\right) + \left(\frac{f_{pe}}{E_p}\right) = 0.003\left(\frac{85.45}{32.87} - 1\right) + \left(\frac{148.00}{28{,}600}\right)$$

$$f_{si} = \varepsilon_{ps}\left[887 + \frac{27{,}613}{\left(1 + \left(112.4\varepsilon_{ps}\right)^{7.36}\right)^{1/7.36}}\right] \leq$$

$$= (0.009974)\left[887 + \frac{27{,}613}{\left(1 + (112.4(0.009974))^{7.36}\right)^{1/7.36}}\right]$$

$$\sum A_{si}F_{si} = A_{ps}f_{si} = (15.19)(242.83)\ a = \beta_1 c = (0.65)(32.87)$$

$$\sum F_{cj} = 0.85f'_{c(deck)}h_f b + 0.85f'_{c(girder)}\left(a - h_f\right)b_w$$
$$= 0.85(6)(7)(72) + 0.85(15)(21.37 - 7)(6.10)$$

$$M_n = 0.85f'_{c(deck)}h_f b\left(d_p - \frac{h_f}{2}\right) + 0.85f'_{c(girder)}\left(a - h_f\right)b_w\left(d_p - h_f - \frac{\left(a - h_f\right)}{2}\right)$$

$$= 0.85(6)(7)(72)\left(85.45 - \frac{7}{2}\right) + 0.85(15)(21.37 - 7)(6.10)\left(85.45 - 7 - \frac{(21.37 - 7)}{2}\right)$$

$$d_t = H - 2 = 89.68 - 2\ \phi = 0.5 + 0.3\left(\frac{d_t}{c} - 1\right) = 0.5 + 0.3\left(\frac{87.68}{32.87} - 1\right)$$

$$\phi M_n = 1.00(290{,}323)$$

Flexural Strength – Strain Compatibility with Non-Linear Concrete Stress Block

The concrete stress-strain curves for both the deck and girder concrete are taken from Collins and Mitchell (see BDM 5.1.1).. The “power formula” of the PCI BDM (se BDM 5.1.3) is used to determine the stress in the prestressing steel for each iteration.

The concrete compression block is divided into (100) slices, (21) equal slices in the flange and (79) equal slices in the web for this case. The strain at the center of each slice was used to determine the average stress within that slice, which was multiplied by the area of the slice to determine the force in each slice.

The product of these forces and the distance to the center of each force from the top of the deck was used to calculate the resultant forces and eccentricities in the flange and

web. Example calculations for the stresses in the slice at the top of the deck, at the interface between the deck and girder, and the prestressing steel are as follows:

For the deck concrete,

$$E_c = \frac{\left(40{,}000\sqrt{f_c'} + 1{,}000{,}000\right)}{1000} = \frac{\left(40{,}000\sqrt{6000} + 1{,}000{,}000\right)}{1000}$$

$= 4098$ ksi

$$n = 0.8 + \frac{f_c'}{2500} = 0.8 + \frac{6000}{2500} = 3.20$$

$$k = 0.67 + \frac{f_c'}{9000} = 0.67 + \frac{6000}{9000} = 1.337$$

$$\varepsilon_c' \times 1000 = \frac{f_c'}{E_c}\frac{n}{n-1} = \frac{6000}{4098}\frac{3.2}{3.2-1} = 2.129$$

For the top slice of deck,

$$y = \frac{7}{21(2)} = 0.167 \text{ in.}$$

$$\varepsilon_{cf} = \frac{0.003}{c}(c - y) = \frac{0.003}{34.42}(34.42 - 0.167) = 0.002985$$

$$f_c = (f_c')\frac{n(\varepsilon_{cf}/\varepsilon_c')}{n - 1 + (\varepsilon_{cf}/\varepsilon_c')^{nk}} = (6)\frac{3.2(0.002985/0.002129)}{3.2 - 1 + (0.002985/0.002129)^{3.2(1.337)}}$$

$= 4.18$ ksi (28.8 MPa)

The contribution of this slice to the overall resultant compressive force is

$$C_1 = (4.18ksi)(72in)\left(\frac{7}{21}in\right) = 100.32kip$$

For bottom slice of deck,

$$y = \frac{7}{21}(20) + \frac{7}{21(2)} = 6.833 \text{ in.}$$

$$\varepsilon_{cf} = \frac{0.003}{c}(c - y) = \frac{0.003}{34.42}(34.42 - 6.833) = 0.002404$$

$$f_c = (f_c')\frac{n(\varepsilon_{cf}/\varepsilon_c')}{n - 1 + (\varepsilon_{cf}/\varepsilon_c')^{nk}} = (6)\frac{3.2(0.002404/0.002129)}{3.2 - 1 + (0.002404/0.002129)^{3.2(1.337)}}$$

$= 5.59$ ksi

The contribution of this slice to the overall resultant compressive force is

$$C_{21} = (5.59ksi)(72in)\left(\frac{7}{21}in\right) = 134.16kip$$

For girder concrete,

$$E_c = \frac{\left(40{,}000\sqrt{f_c'} + 1{,}000{,}000\right)}{1000} = \frac{\left(40{,}000\sqrt{15000} + 1{,}000{,}000\right)}{1000}$$

= 5899 ksi (40674 MPa)

$$n = 0.8 + \frac{f_c'}{2500} = 0.8 + \frac{15000}{2500} = 6.80$$

$$k = 0.67 + \frac{f_c'}{9000} = 0.67 + \frac{15000}{9000} = 2.337$$

$$\varepsilon_c' \times 1000 = \frac{f_c'}{E_c}\frac{n}{n-1} = \frac{15000}{5899}\frac{6.8}{6.8-1} = 2.981$$

For the top slice of girder,

$$y = 7 + \frac{27.42}{79(2)} = 7.174 \text{ in.}$$

$$\varepsilon_{cf} = \frac{0.003}{c}(c - y) = \frac{0.003}{34.42}(34.42 - 7.174) = 0.002375$$

Since $\varepsilon_{cf}/\varepsilon_c' = 0.002375/0.002981 = 0.797 < 1.0,\ k = 1.0$

$$f_c = (f_c')\frac{n(\varepsilon_{cf}/\varepsilon_c')}{n - 1 + (\varepsilon_{cf}/\varepsilon_c')^{nk}} = (15)\frac{6.8(0.002375/0.002981)}{6.8 - 1 + (0.002375/0.002981)^{6.8(1.0)}}$$

= 13.51 ksi

The contribution of this slice to the overall resultant compressive force is

$$C_{22} = (13.51ksi)(6.10in)\left(\frac{34.42 - 7.0}{79}in\right) = 28.60kip$$

For the prestressing steel:

$$\varepsilon_{ps} = 0.003\left(\frac{d_p}{c} - 1\right) + \left(\frac{f_{pe}}{E_p}\right) = 0.003\left(\frac{85.45}{34.42} - 1\right) + \left(\frac{148}{28500}\right) = 0.00964$$

$$f_{ps} = \varepsilon_{ps}\left[887 + \frac{27{,}613}{\left(1+\left(112.4\varepsilon_{ps}\right)^{7.36}\right)^{1/7.36}}\right] \le 270\,ksi$$

$$f_{ps} = (0.00964)\left[887 + \frac{27{,}613}{\left(1+\left(112.4\times 0.00964\right)^{7.36}\right)^{1/7.36}}\right] = 239.93ksi$$

The resultant force in the prestressing steel is

$T = (239.93ksi)(15.19in^2) = 3644.6kip$

The overall depth to the neutral axis, c, was varied until the sum of the compressive force in all the concrete slices equaled the tension force in the prestressing steel. Equilibrium was achieved at a compressive force in the slab of 2473 kip, 3.68" below the top of slab and a compressive force in the girder of 1169kip, 16.20" below the top of slab. Summing moments about the centroid of the prestressing steel,

$M_n = 2473(85.45 - 3.68) + 1169(85.45 - 7 - 9.20) = 283{,}170$ kip-in.

To calculate ϕ,

Assume the lowest row of prestressing strands is located 2" from the bottom of the girder. The depth to the extreme strands is

$d_t = H - 2 = 89.68 - 2 = 87.68$ in.

$$\phi = 0.5 + 0.3\left(\frac{d_t}{c} - 1\right) = 0.5 + 0.3\left(\frac{87.68}{34.42} - 1\right) = 0.96$$

$\phi M_n = 0.96(283{,}170) = 273{,}034$ kip-in.

Effects of Refinement – Strain Compatibility Analysis

A significant amount of additional capacity may be realized for this member by including the top flange of the W83G girder. The top flange is 49" wide and approximately 6" deep. The large area and high strength of the top flange provide a considerable compression contribution to the capacity analysis. The resulting depth to neutral axis, c, is 13.6" and the nominal capacity, Mn, is 321,362 kip-in. The capacity reduction factor is 1.0. Accounting for the top flange results in 14% additional capacity.

The hammerhead pier shown in Figure 5.1 consists of a rectangular pier and a variable depth cap beam that supports 5 lines of precast, pretensioned girders. The girders sit on neoprene pads, which in turn are supported by concrete bearing blocks having dimensions of 18 x 36 in. The Strength I factored loads acting on the 5 bearing blocks include allowances for the factored self-weight of the cap beam.

The specified concrete compressive strength, f_c', is 4 ksi and the specified yield strength of the reinforcing steel is 60 ksi.

Design the hammerhead pier using the AASHTO LRFD Specifications.

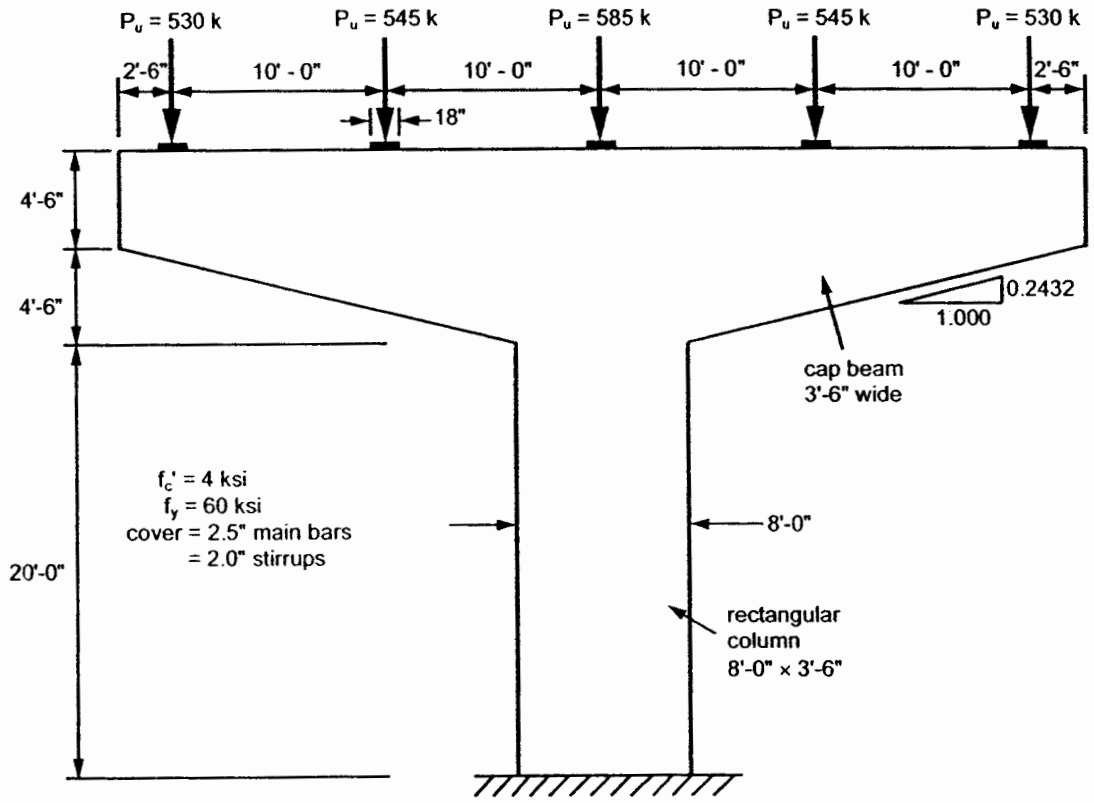

Figure 5.1. Details of hammerhead pier.

The three central loads are located at a distance which is less than twice the member depth from the supporting reaction. Hence the central 20 ft of the hammerhead pier is a D-Region and will be designed using the strut-and-tie method. The outer portions of the hammerhead pier are flexural regions (B-Regions) which can be designed for shear using either the sectional model or the strut-and-tie model. For this example, the strut-and-tie model will be used.

§5.6.3

§5.8.1.1

Step 1 - Draw Idealized Truss Model and Solve for Member Forces

The idealized truss model shown in Figure 5.2 represents the flow of forces in the hammerhead pier. The dashed lines coincide with the centerlines of the compressive struts that represent compressive stresses in different areas of the concrete. The solid lines coincide with the centroids of tension ties, which represent tension forces in different groups of reinforcing bars.

Under the action of the girder loads the ends of the cap beam will bend down causing tension near the top face of the hammerhead pier and compression near the sloping bottom faces. To allow appropriate room for placement of the longitudinal reinforcement, it has been assumed that the centroid of the tension tie near the top face is located 6 in. below the top face. To provide an appropriate space for the concrete compression zone, it has been assumed that the centerline of the bottom compression strut is located 9 in. above the sloping bottom face and is parallel to this face. The compression force in the pier is represented by 3 vertical struts. The central strut carries the 585 kip load, while the outer two struts carry 1075 kips each. Assuming that the pier is subjected to uniform compressive stresses, the width of each outer strut must be:

$$\frac{1075}{585+2\times1075}\times 8 = 3.14 \text{ ft}$$

Hence the centerline of the outer struts will be $0.50\times 3.14 = 1.57$ ft from the outer faces of the pier.

The distributed stirrups in the cap beam are represented by the vertical tension Ties AB, CD, EF, and GH. To solve the statics of the truss model it is convenient to know the lengths of these 4 truss members. As can be seen from Figure 5.1 and Figure 5.2, the vertical distance between the top tie, ACEG, and the bottom strut, BDFH, increases by 0.2432 ft for every additional foot travelled away from the free end of the cantilever. As shown in Figure 5.2, the resulting lengths of the 4 vertical ties are 3.858 ft, 5.074 ft, 6.29 ft., and 8.132 ft.

The member forces shown in Figure 5.2 were determined by the method of joints. Thus at Joint A, the vertical component from Member AD must push the joint upwards with 530 kips. The member must also push the joint to the left with a force of $530\times 5.00/5.074 = 522$ kips. The square root of the sum of the squares of these two components is the force in Member AD, namely a compression of 744 kips. Member AC must have a tension force of 522 kips to balance the horizontal component of Member AD. Considering horizontal and vertical equilibrium for Joints D, C, F, E, H, and G enables all of the member forces to be computed.

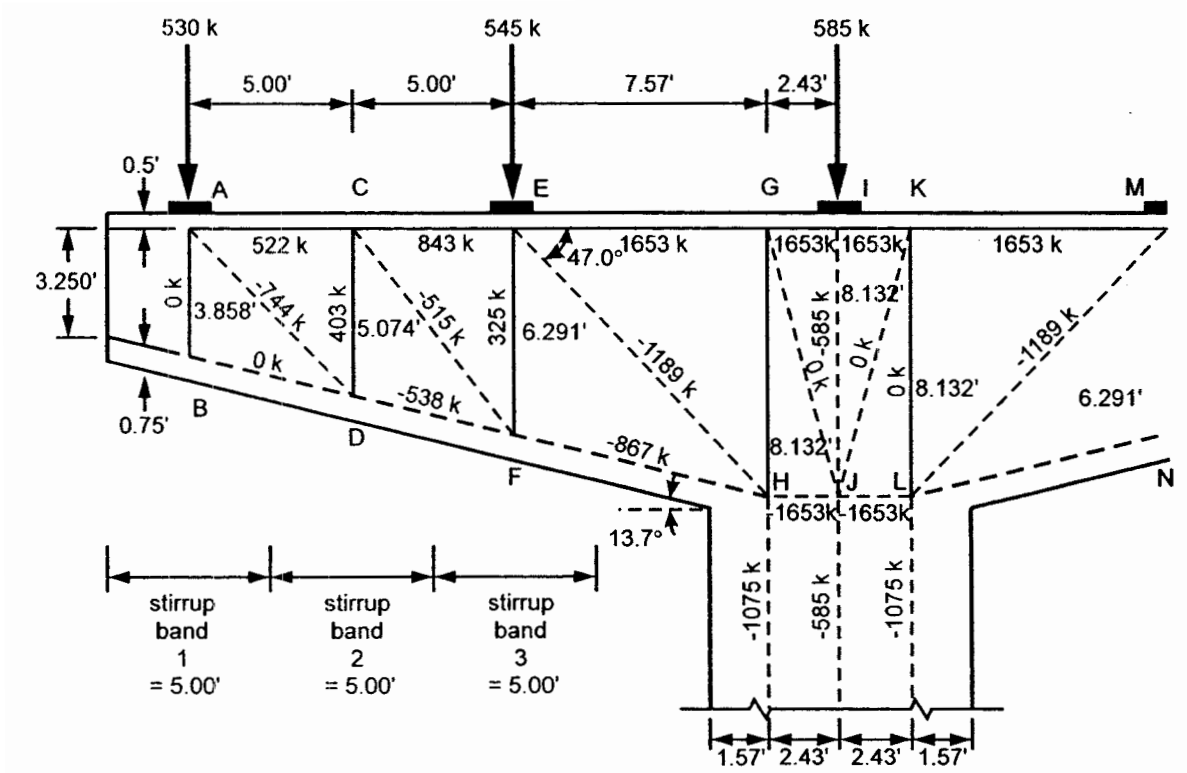

Figure 5.2. Truss idealization.

It is of interest to note that the vertical component of the compression force in the sloping bottom strut, BDFH, carries a significant portion of the vertical shear force. Thus if Member BDFH were horizontal, the forces in Members CD and EF, which represent the tensions in the stirrups, would both be 530 kips, rather than 403 kips and 325 kips, respectively.

Step 2 – Check Size of Bearings

The concrete in the vicinity of Joint E, that is nodal region E, must anchor vertical Tie EF and horizontal Ties EC and EG. The bearing stress on such a region (CTT node) is limited to $0.65\phi f_c'$. Hence the minimum bearing area required to support the 545 kip load is: §5.6.3.5

$$\text{bearing area required} = \frac{P_u}{0.65\phi f_c'} = \frac{545}{0.65 \times 0.70 \times 4} = 299 \text{ in.}^2$$

Therefore, the bearing area chosen, 18 x 36 in., is satisfactory (648 in.^{2}).

Step 3 – Design Reinforcement for Main Tension Tie ACEGI

(a) At the highest tension locations, EGI

The required area of tension tie reinforcement, A_{st}, is:

$$A_{st} = \frac{P_u}{\phi f_y} = \frac{1653}{0.9 \times 60} = 30.61 \text{ in.}^2$$ §5.6.3.4.1

Use 20 No. 11 bars, $A_{st} = 20 \times 1.56 = 31.2 \text{ in.}^2$

As shown in Figure 5.3, the required 20 No. 11 bars can be provided in 2 layers of 10 bars. If No. 5 stirrups are used the centroid of the 20 No. 11 bars will be about 4.7 in. from the top face. Hence the assumption that the centroid of the tension tie would be 6 in. below the top face was conservative.

(b) At lowest tension location, AC

The required area of tension tie reinforcement is: §5.6.3.4.1

$$A_{st} = \frac{P_u}{\phi f_y} = \frac{522}{0.9 \times 60} = 9.67 \text{ in.}^2$$

Therefore, use 8 No. 11 bars, $A_{st} = 8 \times 1.56 = 12.48 \text{ in.}^2$.

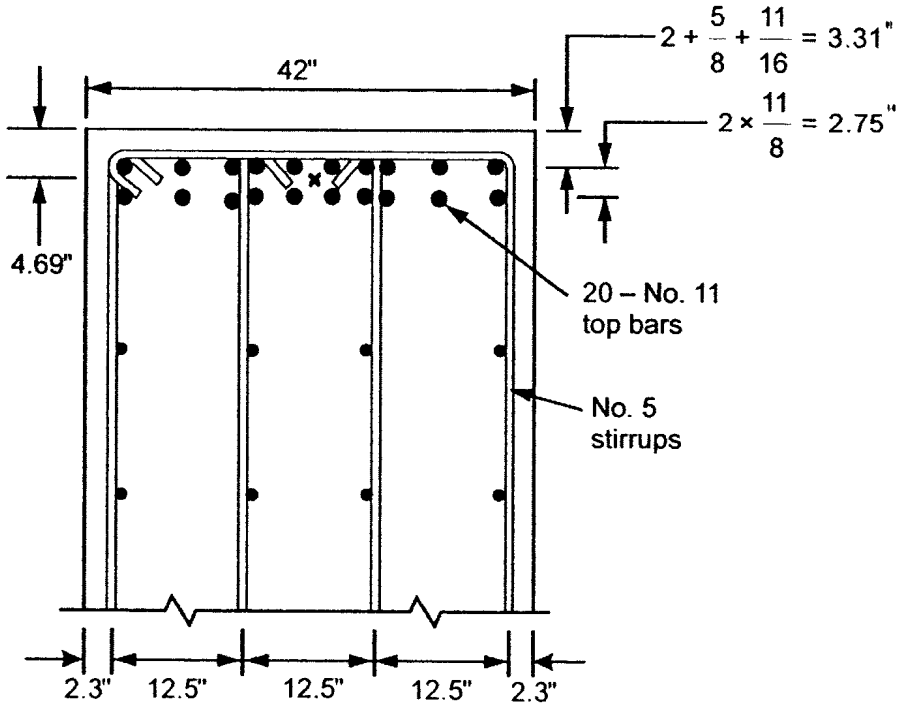

Figure 5.3. Layout of 20 – No. 11 top bars near pier.

(c) Development of bars

The development length for a straight top horizontal No. 11 bar with $f_y = 60$ ksi and $f_c' = 4$ ksi is 82 in. If 90° hooks with at least 2.5 in. of side cover are used the development length is reduced to 19 in. Hence terminate the 10 bars in the lower layer at a location 19 in. beyond point E. Terminate the remaining 10 bars with 90° hooks at a location 27 in. beyond point A. *§5.11.2.1* *§5.11.2.4*

Step 4 – Design Tension Ties Representing Stirrups

Try using No. 5 stirrups with 4 legs (see Figure 5.3).

(a) Stirrup spacing required for Tie CD

Vertical Tie CD has the highest tension. Hence the number of stirrups required in stirrup band 2 (see Figure 5.2), is:

$$n = \frac{P_u}{\phi A_{st} f_y} = \frac{403}{0.9 \times 4 \times 0.31 \times 60} = 6.02$$ *§5.6.3.4.1*

Hence, the required spacing, s, within the 5-ft band is:

$$s \le \frac{60}{6.02} = 9.97 \text{ in.}$$

Try a spacing of 9 in.

In the flexural region between A and E the minimum transverse reinforcement, assuming a stirrup spacing of 9 in., is:

$$A_v = 0.0316\sqrt{f_c'}\,\frac{b_v s}{f_y} = 0.0316 \times \sqrt{4} \times \frac{42 \times 9}{60} = 0.39 \text{ in.}^2$$ *§5.8.2.5*

Since $A_v = 4 \times 0.31 = 1.24 \text{ in.}^2$, an amount greater than minimum has been provided in stirrup band 2 (see Figure 5.2). While No. 5 stirrups with 2 legs could be used in stirrup band 1, which will be governed by the minimum area requirement, it would be more practical to continue the 4-legged No. 5 stirrups at a spacing of 9 in. throughout this region.

(b) Stirrup spacing required for Tie EF

Vertical Tie EF must resist a tension of 325 kips. Hence the number of stirrups required in stirrup band 3 (see Figure 5.2), is:

$$n = \frac{P_u}{\phi A_{st} f_y} = \frac{325}{0.9 \times 4 \times 0.31 \times 60} = 4.85$$ §5.6.3.4.1

Hence, the required spacing, s, within the 5-ft band is:

$$s \le \frac{60}{4.85} = 12.37 \text{ in.}$$

Try a spacing of 12 in.

For crack control in this disturbed region, the ratio of reinforcement area to cross-sectional area shall not be less than 0.003 in both the vertical and horizontal directions. Hence: §5.6.3.6

$$\frac{A_{st}}{bs} \ge 0.003$$

Therefore:

$$s \le \frac{A_{st}}{0.003\, b} = \frac{4 \times 0.31}{0.003 \times 42} = 9.84 \text{ in.}$$

Thus use No. 5 stirrups with 4 legs spaced at 9 in. throughout the length of the beam.

Step 5 – Check Capacity of Bottom Strut BDFH

The highest compressive force in the bottom Strut BDFH is 867 kips in Member FH (see Figure 5.2).

As this strut will be crossed by vertical stirrups, the compressive capacity of this strut may need to be reduced. The area of Tie EF is $(60/9) \times 4 \times 0.31 = 8.27 \text{ in.}^2$. Hence the strain in this stirrup under the 325 kip tension is:

$$\varepsilon_s = \frac{P_u}{A_{st} E_s} = \frac{325}{8.27 \times 29{,}000} = 1.36 \times 10^{-3}$$

As the smallest angle between the strut and the tension tie is 90 - 13.7 = 76.3°, the principal strain, ε_1, can be determined as: §5.6.3.3.3

$$\varepsilon_1 = \varepsilon_s + (\varepsilon_s + 0.002)\cot^2 \alpha_s = 1.36 \times 10^{-3} + (1.36 \times 10^{-3} + 0.002)\cot^2 76.3^0 = 1.56 \times 10^{-3}$$

And, the limiting compressive stress, f_{cu}, in the strut is: §5.6.3.3.3

$$f_{cu} = \frac{f_c'}{0.8 + 170\,\varepsilon_1} \le 0.85 f_c' = \frac{4}{0.8 + 170 \times 1.56 \times 10^{-3}} = 3.76 \text{ ksi} \le 0.85 \times 4 = 3.40 \text{ ksi}$$

The centroid of the strut was assumed to be at 9 in. vertically from the bottom face (see Figure 5.2); hence the thickness of the strut perpendicular to the sloping bottom face is $2 \times 9 \times \cos 13.7^\circ = 17.5$ in. The nominal resistance of the strut is:

$$P_n = f_{cu} A_{cs} = 3.40 \times 42 \times 17.5 = 2499 \text{ kips}$$ §5.6.3.3.1

The factored resistance of the strut is:

$$P_r = \phi P_n = 0.70 \times 2499 = 1749 \text{ kips}$$ §5.6.3.2

As the factored resistance exceeds the 867 kip compression due to factored loads, the strut capacity is adequate.

While the truss geometry could be adjusted by reducing the thickness of the bottom strut and the member forces recalculated, the changes in forces will be rather small, resulting in perhaps the saving of only one bar in the main tension tie. Thus the original conservative assumptions are acceptable.

Step 6 – Check Capacity of Diagonal Struts of AD, CF, and EH

Of the three diagonal struts crossing the web, AD, CF, and EH, Member EH has the highest compression. The details of the member at end E, where it crosses the tension ties, are shown in Figure 5.4.

The strains in Ties CE and EG due to factored loads are shown in Figure 5.3. For determining the strut capacity, the average value of these two strains has been assumed, giving $\varepsilon_s = 1.85 \times 10^{-3}$.

The principal strain, ε_1, can be determined as: §5.6.3.3.3

$$\varepsilon_1 = \varepsilon_s + (\varepsilon_s + 0.002)\cot^2 \alpha_s = 1.85 \times 10^{-3} + (1.85 \times 10^{-3} + 0.002)\cot^2 47.0^0 = 5.20 \times 10^{-3}$$

and the limiting compressive stress, f_{cu}, in the strut is: §5.6.3.3.3

$$f_{cu} = \frac{f_c'}{0.8 + 170\,\varepsilon_1} \le 0.85 f_c' = \frac{4}{0.8 + 170 \times 5.20 \times 10^{-3}} = 2.38 \text{ ksi} \le 0.85 \times 4 = 3.40 \text{ ksi}$$

The cross-sectional dimension of strut EH in the plane of the pier is 19.6 in. (see Figure 5.4), while the effective thickness of the strut at end E could be conservatively taken as 36 in. which is the width of the bearing block. However, the good anchorage conditions provided by the No. 11 bars in the corner of the stirrups enable the effective thickness of the strut to be increased. §5.6.3.3.2

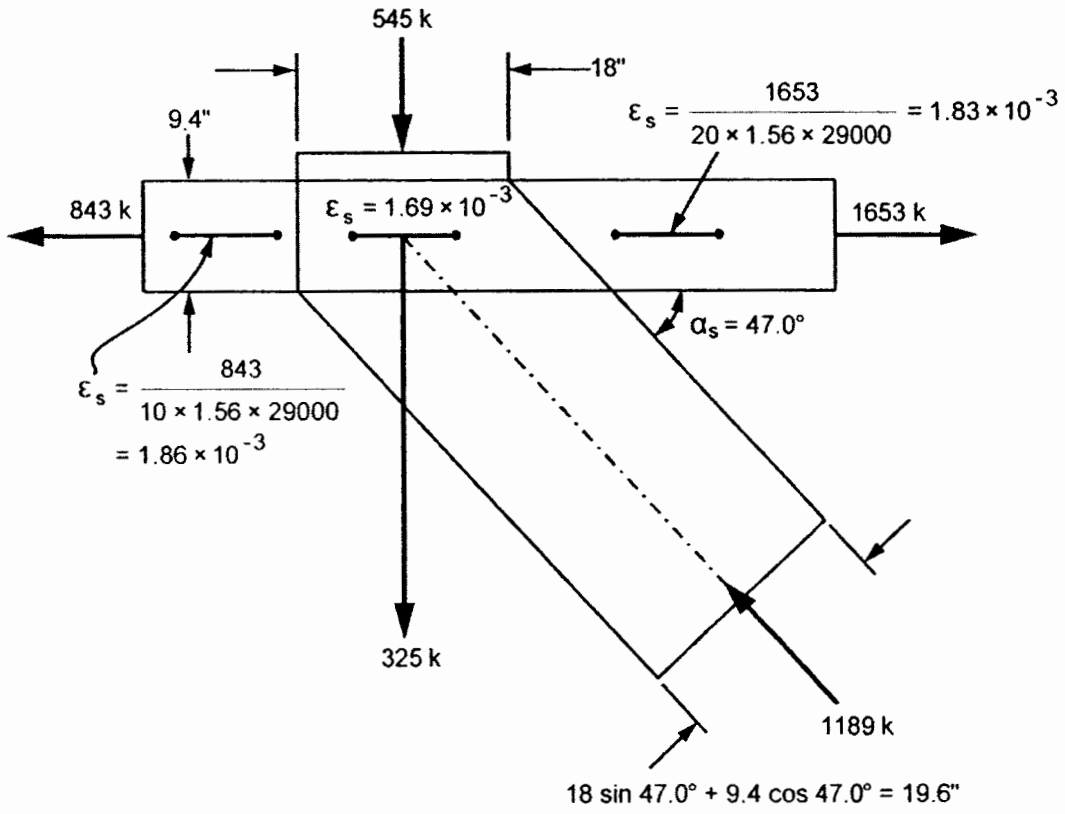

Figure 5.4. Details of Strut EH near Node E.

As can be seen from Figure 5.3, the center-to-center distance of the vertical stirrups across the 42-in. width of the hammerhead pier is 12.5 in. As this distance is less than $2 \times 6d_{ba} = 2 \times 6 \times 1.410 = 16.9$ in., the full 42-in. width of the pier cap is effective. Hence the nominal resistance of the strut is:

$$P_n = f_{cu} A_{cs} = 2.38 \times 42 \times 19.6 = 1959 \text{ kips}$$ §5.6.3.3.1

The factored resistance of the strut is:

$$P_r = \phi P_n = 0.70 \times 1959 = 1357 \text{ kips} \geq 1189 \text{ kips required}$$

Therefore, the strut capacity is adequate.

Step 7 – Provide Crack Control Reinforcement

In Step 4, the stirrup spacing was adjusted to satisfy the crack control requirements for reinforcement in the vertical direction, but crack control reinforcement also must be provided in the horizontal direction. The vertical spacing between these horizontal bars must not exceed 12 in. If this maximum spacing is used, the area of horizontal bars in each layer needs to be: §5.6.3.6

$$A_{st} = 0.003bs = 0.003 \times 12 \times 42 = 1.51 \text{ in.}^2$$

Therefore, use 4 No. 6 horizontal bars at 12 in. spacing ($4 \times 0.44 = 1.76$ in.^{2} provided), arranged as shown in Figure 5.5.

Step 8 – Sketch the Required Reinforcement

The resulting reinforcement for the hammerhead pier is shown in Figure 5.5. For clarity the pier reinforcement is not shown.

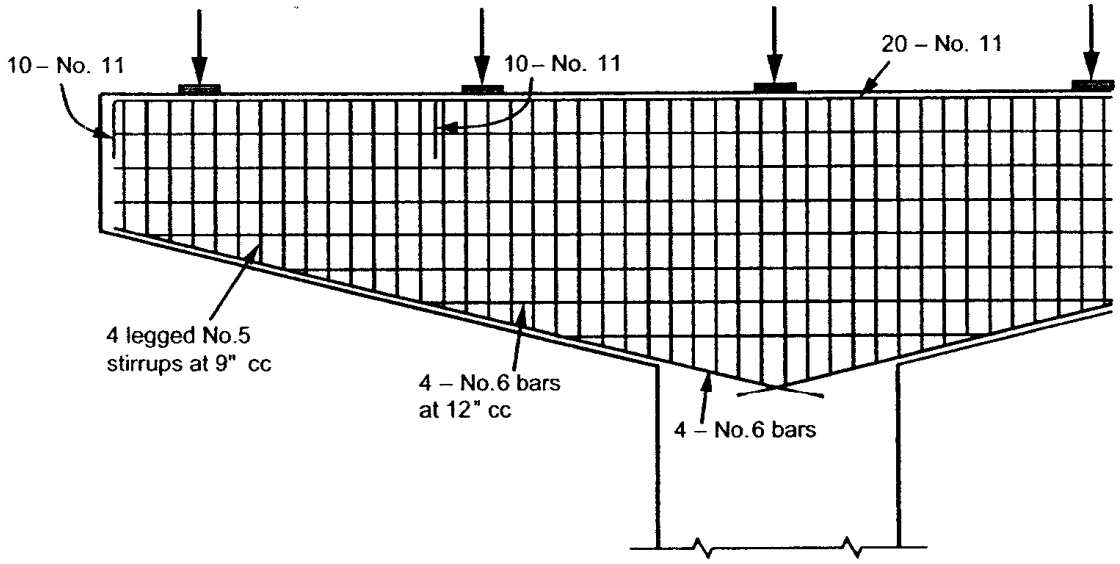

Figure 5.5. Reinforcement details for hammerhead pier.

Define Units:

$ksi \equiv 1000 \cdot psi$ $kip \equiv 1000 \cdot lbf$ $kcf \equiv kip \cdot ft^{-3}$ $klf \equiv kip \cdot ft^{-1}$

Problem Description:

Find the torsion and shear capacity of a reinforced concrete beam of width 37in and height 90in. Clear cover for all sides equals 1.625in. Shear and torsion reinforcement consists of #6 stirrups spaced at 5in. Longitudinal moment steel consists of 4 #18 bars in one row in the top and in the bottom. Factored loads are V_u = 450 kips and T_u = 500 kip-ft.

Concrete Properties:

$f'c := 4 \cdot ksi$

Reinforcement Properties:

Bar Diameters:

$$dia(bar) := \begin{cases} 0.375 \cdot in & \text{if } bar = 3 \\ 0.500 \cdot in & \text{if } bar = 4 \\ 0.625 \cdot in & \text{if } bar = 5 \\ 0.750 \cdot in & \text{if } bar = 6 \\ 0.875in & \text{if } bar = 7 \\ 1.000in & \text{if } bar = 8 \\ 1.128in & \text{if } bar = 9 \\ 1.270in & \text{if } bar = 10 \\ 1.410in & \text{if } bar = 11 \\ 1.693in & \text{if } bar = 14 \\ 2.257in & \text{if } bar = 18 \end{cases}$$

Bar Areas:

$$A_b(bar) := \begin{cases} 0.11 \cdot in^2 & \text{if } bar = 3 \\ 0.20 \cdot in^2 & \text{if } bar = 4 \\ 0.31 \cdot in^2 & \text{if } bar = 5 \\ 0.44 \cdot in^2 & \text{if } bar = 6 \\ 0.60 \cdot in^2 & \text{if } bar = 7 \\ 0.79 \cdot in^2 & \text{if } bar = 8 \\ 1.00 \cdot in^2 & \text{if } bar = 9 \\ 1.27 \cdot in^2 & \text{if } bar = 10 \\ 1.56 \cdot in^2 & \text{if } bar = 11 \\ 2.25 \cdot in^2 & \text{if } bar = 14 \\ 4.00 \cdot in^2 & \text{if } bar = 18 \end{cases}$$

$f_y := 40 \cdot ksi$

$E_s := 29000ksi$ LRFD 5.4.3.2

$E_p := 28500ksi$ LRFD 5.4.4.2 for strands

$bar_{LT} := 18$ Longitudinal - Top

$bar_{LB} := 18$ Longitudinal - Bottom

$bar_T := 6$ Transverse

$s := 5 \cdot in$ Spacing of Transverse Reinforcement

$d_{LT} := dia(bar_{LT})$ $d_{LT} = 2.257\,in$ $A_{LT} := A_b(bar_{LT})$ $A_{LT} = 4\,in^2$

$d_{LB} := dia(bar_{LB})$ $d_{LB} = 2.257\,in$ $A_{LB} := A_b(bar_{LB})$ $A_{LB} = 4\,in^2$

$d_T := dia(bar_T)$ $d_T = 0.75\,in$ $A_T := A_b(bar_T)$ $A_T = 0.44\,in^2$

Beam Section Properties:

$b := 37in$ Width of Beam

$h := 90in$ Height of Beam

$bottomcover := 1.625 \cdot in$

$sidecover := 1.625 \cdot in$

$topcover := 1.625 \cdot in$

Factored Loads:

$V_u := 450 \cdot kip$

$T_u := 500 \cdot kip \cdot ft$

$M_u := 0 \cdot kip \cdot ft$

$N_u := 0 \cdot kip$

Torsional Resistance Investigation Requirement:

Torsion shall be investigated where: LRFD 5.8.2.1

$T_u > 0.25 \cdot \phi \cdot T_{cr}$

$\phi := 0.90$ For Torsion and Shear - Normal weight concrete LRFD 5.5.4.2

$A_{cp} := b \cdot h$ $A_{cp} = 3330\,in^2$

$p_c := (b + h) \cdot 2$ $p_c = 254\,in$

$f_{pc} := 0 \cdot ksi$

$$T_{cr} := 0.125 \cdot \sqrt{\frac{f'c}{ksi}} \cdot \frac{\left(\frac{A_{cp}}{in^2}\right)^2}{\left(\frac{p_c}{in}\right)} \cdot \sqrt{1 + \frac{\frac{f_{pc}}{ksi}}{0.125 \cdot \sqrt{\frac{f'c}{ksi}}}} \cdot kip \cdot in$$

$T_{cr} = 10914\,kip \cdot in$

$T_{cr} = 909.5\,kip \cdot ft$

$0.25 \cdot \phi \cdot T_{cr} = 204.6\,kip \cdot ft$

$T_u > 0.25 \cdot \phi \cdot T_{cr} = 1$ Torsion shall be investigated.

Since torsion shall be investigated, transverse reinforcement is required as per LRFD 5.8.2.4. The minimum transverse reinforcement requirement of LRFD 5.8.2.5 shall be met.

Minimum Transverse Reinforcement: LRFD 5.8.2.5

$b_v := b$ $b_v = 37\,in$ LRFD 5.8.2.9

$A_v := 2A_T$ $A_v = 0.88\,in^2$ LRFD 5.8.3.3

$A_{vmin} := 0.0316 \cdot \sqrt{\frac{f'c}{ksi}} \cdot ksi \cdot \frac{b_v \cdot s}{f_y}$ $A_{vmin} = 0.29\,in^2$

$A_v \geq A_{vmin} = 1$ OK

Equivalent Factored Shear Force: LRFD 5.8.2.1

$$p_h := 2 \cdot \left[\left[b - 2 \cdot \left(sidecover + \frac{d_T}{2} \right) \right] + \left(h - topcover - bottomcover - d_T \right) \right]$$

$p_h = 238\,in$

$$A_{oh} := \left[b - 2 \cdot \left(sidecover + \frac{d_T}{2} \right) \right] \cdot \left(h - topcover - bottomcover - d_T \right)$$

$A_{oh} = 2838\,in^2$

$A_o := 0.85 \cdot A_{oh}$ $A_o = 2412.3\,in^2$ LRFD C5.8.2.1

Equivalent Factored Shear Force:

$$V_{ust} := \sqrt{V_u^{\,2} + \left(\frac{0.9 \cdot p_h \cdot T_u}{2 \cdot A_o} \right)^2}$$ $V_{ust} = 522.9\,kip$ LRFD 5.8.2.1-6

V_{ust} shall be used to determine β and θ.

Determination of β and θ: LRFD 5.8.3.4

$d_e := h - bottomcover - d_T - \frac{d_{LB}}{2}$ $d_e = 86.5\,in$ LRFD 5.8.2.9

$d_v := \max(0.9 \cdot d_e, 0.72 \cdot h)$ $d_v = 77.85\,in$ LRFD 5.8.2.9

$V_p := 0 \cdot kip$ No Prestress Strands

$A_{ps} := 0 \cdot in^2$ No Prestress Strands

$A_s := 4 \cdot A_{LB}$ $A_s = 16\,in^2$ For 4 #18 bars

$f_{po} := 0 \cdot ksi$

$\theta := 30.5 \cdot deg$ Assume to begin iterations (then vary until convergence below)

$$\varepsilon_x := \frac{\left(\frac{|M_u|}{d_v} + 0.5 \cdot N_u + 0.5 \cdot |V_{ust} - V_p| \cdot \cot(\theta) - A_{ps} \cdot f_{po}\right)}{2 \cdot (E_s \cdot A_s + E_p \cdot A_{ps})}$$ LRFD 5.8.3.4.2-1

$\varepsilon_x \cdot 1000 = 0.478$

$v_u := \frac{|V_{ust} - \phi \cdot V_p|}{\phi \cdot b_v \cdot d_v}$ $v_u = 0.202\,ksi$ LRFD 5.8.2.9-1

$\frac{v_u}{f'c} = 0.05$

From Table 5.8.3.4.2-1, Find β and θ

$\theta := 30.5 \cdot deg$ Value is close to original guess. OK.

$\beta := 2.59$

Torsional Resistance:

The factored Torsional Resistance shall be: LRFD 5.8.2.1

$T_r = \phi \cdot T_n$

$A_t := A_T$ $A_t = 0.44\,in^2$ LRFD 5.8.3.6.2

$T_n := \frac{2 \cdot A_o \cdot A_t \cdot f_y \cdot \cot(\theta)}{s}$ $T_n = 28831\,kip \cdot in$ LRFD 5.8.3.6.2-1

$T_n = 2403\,kip \cdot ft$

$T_r := \phi \cdot T_n$ $T_r = 25948\,kip \cdot in$ LRFD 5.8.2.1

$T_r = 2162\,kip \cdot ft$

$T_r \geq T_u = 1$ OK

Shear Resistance:

The factored Shear Resistance shall be:

$V_r = \phi \cdot V_n$ LRFD 5.8.2.1

$V_c := 0.0316 \cdot \beta \cdot \sqrt{\frac{f'c}{ksi}} \cdot b_v \cdot d_v \cdot ksi$ $V_c = 471.5\,kip$ LRFD 5.8.3.3

$\alpha := 90 \cdot deg$

$V_s := \frac{A_v \cdot f_y \cdot d_v \cdot (\cot(\theta) + \cot(\alpha)) \cdot \sin(\alpha)}{s}$ $V_s = 930.4\,kip$ LRFD 5.8.3.3

$V_n := \min\left(V_c + V_s + V_p, 0.25 \cdot f'c \cdot b_v \cdot d_v + V_p\right)$ $V_n = 1402\,kip$

$V_r := \phi \cdot V_n$ $V_r = 1262\,kip$

$V_r \geq V_u = 1$ OK

Check for Longitudinal Reinforcement: LRFD 5.8.3.6.3

$f_{ps} := 0 \cdot ksi$

$X1 := A_s \cdot f_y + A_{ps} \cdot f_{ps}$ $X1 = 640\,kip$

For a Solid Section:

$$X2 := \frac{|M_u|}{\phi \cdot d_v} + \frac{0.5 \cdot N_u}{\phi} + \cot(\theta) \cdot \sqrt{\left(\left|\frac{V_u}{\phi} - V_p\right| - 0.5 \cdot V_s\right)^2 + \left(\frac{0.45 \cdot p_h \cdot T_u}{2 \cdot A_o \cdot \phi}\right)^2}$$

$X2 = 258\,kip$

$X1 \geq X2 = 1$ OK

Maximum Spacing of Transverse Reinforcement: LRFD 5.8.2.7

$v_u = 0.202\,ksi$

$0.125 \cdot f'c = 0.5\,ksi$

$s_{max} := \text{if}\left(v_u < 0.125 \cdot f'c, \min\left(0.8 \cdot d_v, 24in\right), \min\left(0.4 \cdot d_v, 12in\right)\right)$

$s_{max} = 24\,in$

$\text{if}\left(s \leq s_{max}, \text{"OK"}, \text{"NG"}\right) = \text{"OK"}$

This design is based upon:

- AASHTO Guide Specifications for Structural Design of Sound Barriers - 1989 (including 2002 interim)
- AASHTO Standard Specifications for Highway Bridges 17th Ed. - 2002
- USS Steel Sheet Piling Design Manual - July 1984
- WSDOT Bridge Design Manual
- Caltrans Trenching and Shoring Manual - June 1995

This design doesn't account for the loads of a combined retaining wall / noisewall. A maximum of 2 ft of retained fill above the final ground line is suggested.

MathCAD file written by Brian Aldrich, July 15, 2004.

Define Units: $ksi \equiv 1000 \cdot psi$ $kip \equiv 1000 \cdot lbf$ $kcf \equiv kip \cdot ft^{-3}$ $klf \equiv kip \cdot ft^{-1}$

$plf \equiv lbf \cdot ft^{-1}$ $psf \equiv lbf \cdot ft^{-2}$ $pcf \equiv lbf \cdot ft^{-3}$

Concrete Properties:

$w_c := 160 \cdot pcf$ BDM 4.1.1

$f'c := 4000 \cdot psi$

$E_c := \left(\frac{w_c}{pcf}\right)^{1.5} \cdot 33 \cdot \sqrt{\frac{f'c}{psi}} \cdot psi$ $E_c = 4.224 \times 10^6\, psi$ Std Spec. 8.7.1

$\beta_1 := if\left(f'c \le 4000 \cdot psi, 0.85, \max\left(0.85 - \frac{f'c - 4000 \cdot psi}{1000 \cdot psi} \cdot 0.05, 0.65\right)\right)$ Std Spec. 8.16.2.7

$\beta_1 = 0.85$

$f_r := 7.5 \cdot \sqrt{\frac{f'c}{psi}} \cdot psi$ $f_r = 474.3\, psi$ Std Spec. 8.15.2.1.1

Reinforcement Properties:

Diameters: $dia(bar) := \begin{cases} 0.375\cdot in & \text{if } bar = 3 \\ 0.500\cdot in & \text{if } bar = 4 \\ 0.625\cdot in & \text{if } bar = 5 \\ 0.750\cdot in & \text{if } bar = 6 \\ 0.875\cdot in & \text{if } bar = 7 \\ 1.000\cdot in & \text{if } bar = 8 \\ 1.128\cdot in & \text{if } bar = 9 \\ 1.270\cdot in & \text{if } bar = 10 \\ 1.410\cdot in & \text{if } bar = 11 \\ 1.693\cdot in & \text{if } bar = 14 \\ 2.257\cdot in & \text{if } bar = 18 \end{cases}$

Areas: $A_b(bar) := \begin{cases} 0.11\cdot in^2 & \text{if } bar = 3 \\ 0.20\cdot in^2 & \text{if } bar = 4 \\ 0.31\cdot in^2 & \text{if } bar = 5 \\ 0.44\cdot in^2 & \text{if } bar = 6 \\ 0.60\cdot in^2 & \text{if } bar = 7 \\ 0.79\cdot in^2 & \text{if } bar = 8 \\ 1.00\cdot in^2 & \text{if } bar = 9 \\ 1.27\cdot in^2 & \text{if } bar = 10 \\ 1.56\cdot in^2 & \text{if } bar = 11 \\ 2.25\cdot in^2 & \text{if } bar = 14 \\ 4.00\cdot in^2 & \text{if } bar = 18 \end{cases}$

$f_y := 60000\cdot psi$

$E_s := 29000000\cdot psi$ Std. Spec. 8.7.2

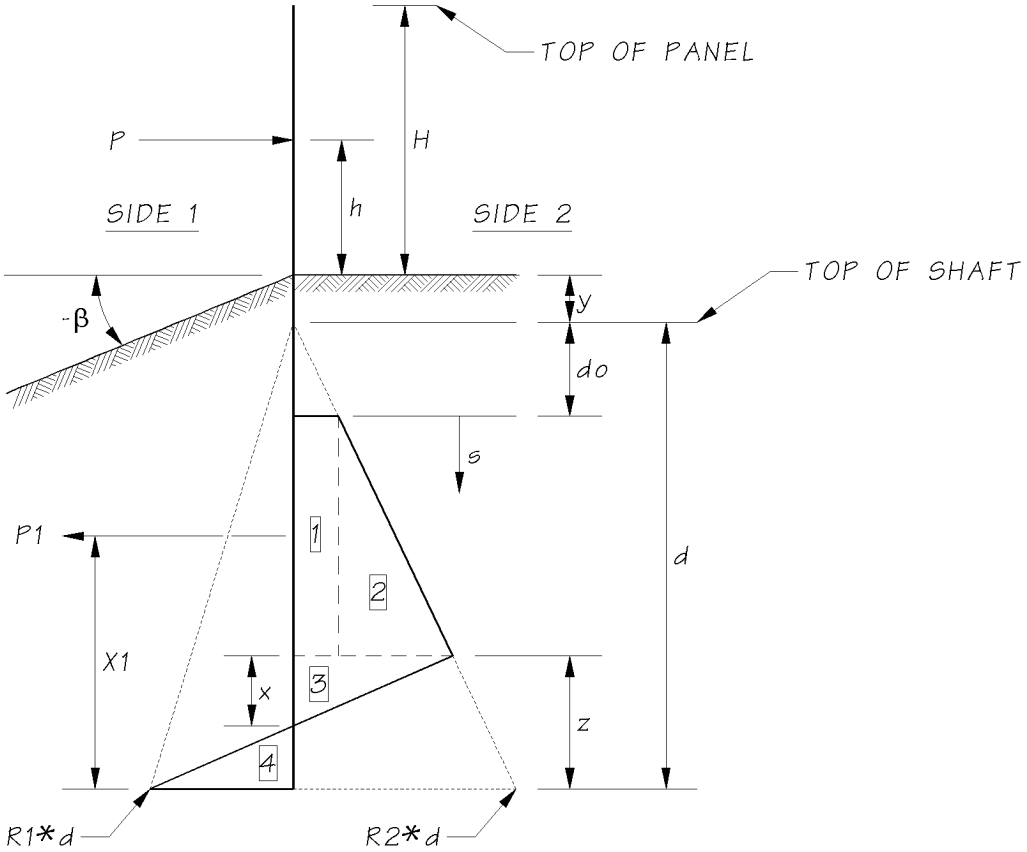

FIGURE A: SHAFT LATERAL SOIL PRESSURES

Wall Geometry:

Wall Height:	$H := 24 \cdot ft$	H should be <= 28 ft
Half of Wall Height:	$h := H \cdot 0.5$	$h = 12\,ft$
Shaft Diameter:	$b := 2.50 \cdot ft$	
Shaft Spacing:	$L := 12 \cdot ft$	

Wind Load (Guide Spec. Table 1-2.1.2.C):

$WindExp := "B2"$ Wind Exposure B1 or B2 - Provided by the Region

$WindVel := 90 \cdot mph$ Wind Velocity 80 or 90 mph - Provided by the Region

$$WindPressure(WindExp, WindVel) := \begin{cases} 12 \cdot psf & \text{if } (WindExp = "B1" \wedge WindVel = 80 \cdot mph) \\ 16 \cdot psf & \text{if } (WindExp = "B1" \wedge WindVel = 90 \cdot mph) \\ 20 \cdot psf & \text{if } (WindExp = "B2" \wedge WindVel = 80 \cdot mph) \\ 25 \cdot psf & \text{if } (WindExp = "B2" \wedge WindVel = 90 \cdot mph) \\ "error" & \text{otherwise} \end{cases}$$

Wind Pressure: $P_w := WindPressure(WindExp, WindVel)$ $P_w = 25\,psf$

Seismic Load (Guide Spec. 1-2.1.3):

Acceleration Coefficient	$A := 0.35$	BDM 4.4-A2
DL Coefficient, Wall	$f := 0.75$	Not on bridge condition
Panel Plan Area:	$A_{pp} := 4in \cdot L + 13in \cdot 16in$	$A_{pp} = 5.44\,ft^2$
Seismic Force EQD (perp. to wall surface):	$EQD := \max(A \cdot f, 0.1) \cdot \left(\frac{A_{pp} \cdot w_c}{L}\right)$	$EQD = 19.1\,psf$

Factored Loads (Guide Spec. 1-2.2.2):

$Wind := 1.3 \cdot P_w \cdot 2 \cdot h \cdot L$	$Wind = 9360\,lbf$	
$EQ := 1.3 \cdot EQD \cdot 2 \cdot h \cdot L$	$EQ = 7134\,lbf$	
$P := \max(Wind, EQ)$	$P = 9360\,lbf$	Factored Design load acting at mid height of wall "h".

Soil Parameters:

Soil Friction Angle:	$\phi := 38 \cdot deg$		Provided by the Region
Soil Unit Weight:	$\gamma := 125 \cdot pcf$		Provided by the Region
Top Soil Depth:	$y := 2.0 \cdot ft$		From top of shaft to ground line
Ineffective Shaft Depth:	$d_o := 0.5 \cdot ft$		Depth of neglected soil at shaft
Isolation Factor for Shafts:	$Iso := \min\left(3.0, 0.08 \cdot \frac{\phi}{deg}, \frac{L}{b}\right)$ $Iso = 3.00$		Factor used to amplify the passive resistance based on soil wedge behavior resulting from shaft spacing - Caltrans pg 10-2.
Factor of Safety:	$FS := 1.00$		
Angle of Wall Friction:	$\delta := \frac{2}{3} \cdot \phi$	$\delta = 25.333\,deg$	Guide Spec. App. C pg. 33
Correction Factor for Horizontal Component of Earth Pressure:	$HC := \cos(\delta)$	$HC = 0.904$	
Foundation Strength Reduction Factors:	$\phi_{fa} := 1.00$	(Active)	Guide Spec. 1-2.2.3
	$\phi_{fp} := 0.90$	(Passive)	Guide Spec. 1-2.2.3

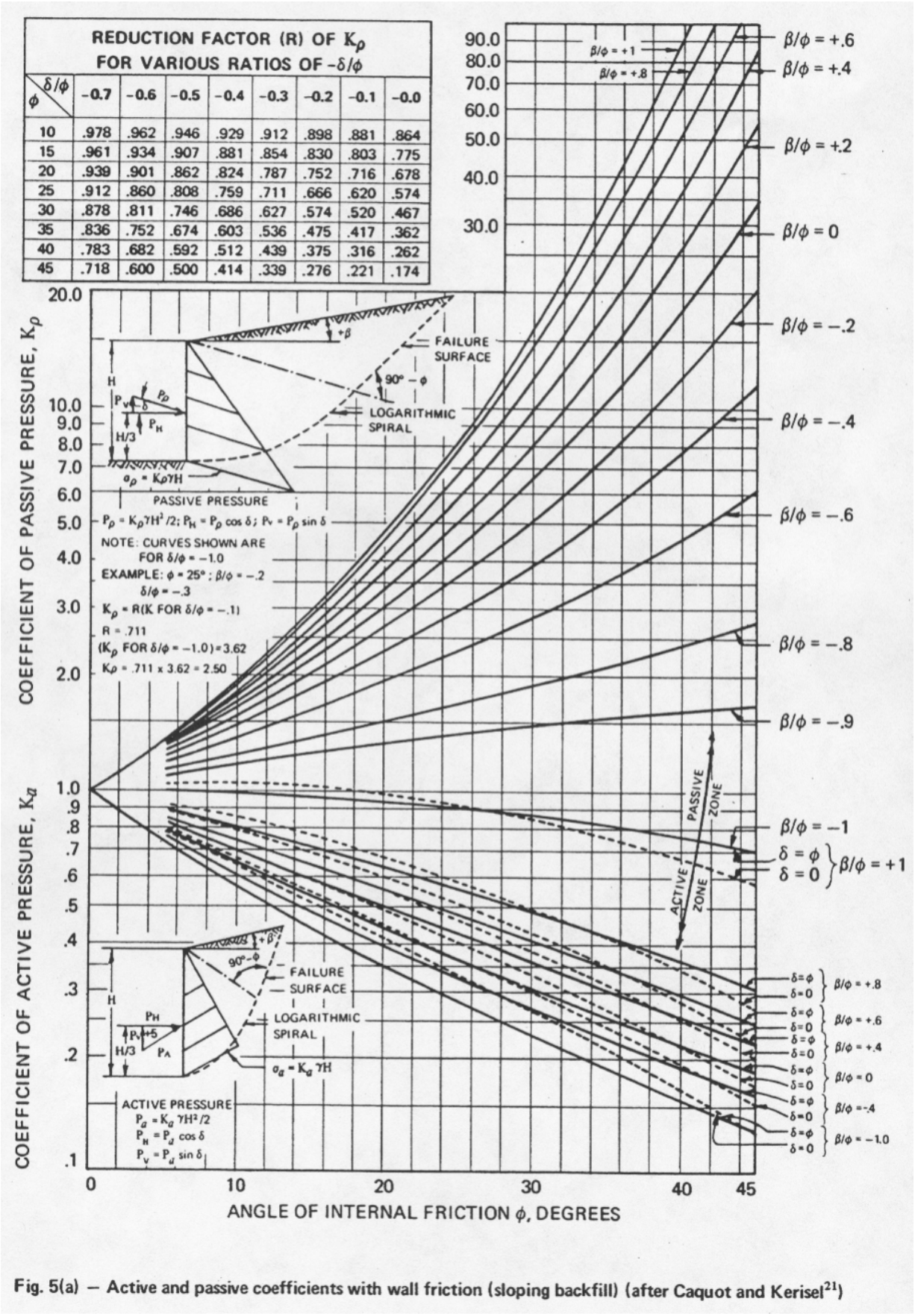

Fig. 5(a) — Active and passive coefficients with wall friction (sloping backfill) (after Caquot and Kerisel[21])

Side 1:

Backfill Slope Angle: $\beta_{s1} := -\text{atan}\left(\frac{1}{2}\right)$ $\beta_{s1} = -26.5651\ \text{deg}$ $\frac{\beta_{s1}}{\phi} = -0.70$

Using the USS Steel Sheet Piling Design Manual, Figure 5(a):

For ϕ = 38 deg and β_s = 0 deg:
K_a = 0.234, K_p = 14.20, R_p = 0.773

For ϕ = 32 deg and β_s = 0 deg:
K_a = 0.290, K_p = 7.85, R_p = 0.8366

For ϕ = 38 deg and β_s = -26.5651 deg:
K_a = 0.190, K_p = 3.060, R_p = 0.773

For ϕ = 32 deg and β_s = -26.5651 deg:
K_a = 0.230, K_p = 1.82, R_p = 0.8366

Active Earth Pressure Coeff: $K_{a1} := 0.190$ USS Fig. 5(a)

Passive Earth Pressure Coeff: $K_{p1} := 3.060$ USS Fig. 5(a)

Reduction for Kp: $R_{p1} := 0.773$ USS Fig. 5(a)

Active Pressure:

$\phi P_{a1} := K_{a1} \cdot \gamma \cdot HC \cdot \phi_{fa}$ $\phi P_{a1} = 21\ \frac{\text{psf}}{\text{ft}}$

Passive Pressure:

$\phi P_{p1} := \frac{K_{p1} \cdot R_{p1} \cdot \gamma \cdot HC \cdot Iso \cdot \phi_{fp}}{FS}$ $\phi P_{p1} = 722\ \frac{\text{psf}}{\text{ft}}$

Side 2:

Backfill Slope Angle: $\beta_{s2} := -\text{atan}\left(\frac{1}{2}\right)$ $\beta_{s2} = -26.5651\ \text{deg}$ $\frac{\beta_{s2}}{\phi} = -0.70$

Active Earth Pressure Coeff: $K_{a2} := 0.190$ USS Fig. 5(a)

Passive Earth Pressure Coeff: $K_{p2} := 3.060$ USS Fig. 5(a)

Reduction for Kp: $R_{p2} := 0.773$ USS Fig. 5(a)

Active Pressure:

$\phi P_{a2} := K_{a2} \cdot \gamma \cdot HC \cdot \phi_{fa}$ $\phi P_{a2} = 21\ \frac{\text{psf}}{\text{ft}}$

Passive Pressure:

$\phi P_{p2} := \frac{K_{p2} \cdot R_{p2} \cdot \gamma \cdot HC \cdot Iso \cdot \phi_{fp}}{FS}$ $\phi P_{p2} = 722\ \frac{\text{psf}}{\text{ft}}$

Allowable Net Lateral Soil Pressure:

$R_1 := \phi P_{p1} - \phi P_{a2}$ $R_1 = 700\ \frac{\text{psf}}{\text{ft}}$ Side 1

$R_2 := \phi P_{p2} - \phi P_{a1}$ $R_2 = 700\ \frac{\text{psf}}{\text{ft}}$ Side 2

Depth of Shaft Required:

The function "ShaftD" finds the required shaft depth "d" by increasing the shaft depth until the sum of the moments about the base of the shaft "Msum" is nearly zero. See Figure A for a definition of terms.

$$\text{ShaftD}\left(d_o, P, R_1, R_2, b, h, y\right) :=$$

$d \leftarrow 0 \cdot ft$

$M_{sum} \leftarrow 100 \cdot lbf \cdot ft$

while $M_{sum} \geq 0.001 \cdot lbf \cdot ft$

$d \leftarrow d + 0.00001 \cdot ft$

$z \leftarrow \frac{2}{d \cdot \left(R_1 + R_2\right)} \cdot \left(\frac{R_2 \cdot d^2}{2} - \frac{R_2 \cdot {d_o}^2}{2} - \frac{P}{b} \right)$

$x \leftarrow \frac{R_2 \cdot z \cdot (d - z)}{R_1 \cdot d + R_2 \cdot (d - z)}$

$P1 \leftarrow \left(R_2 \cdot d_o\right) \cdot \left(d - d_o - z\right)$

$P2 \leftarrow R_2 \cdot \left(d - d_o - z\right)^2 \cdot \frac{1}{2}$

$P3 \leftarrow R_2 \cdot (d - z) \cdot x \cdot \frac{1}{2}$

$P4 \leftarrow R_1 \cdot d \cdot (z - x) \cdot \frac{1}{2}$

$X1 \leftarrow \frac{z + d - d_o}{2}$

$X2 \leftarrow \frac{2 \cdot z + d - d_o}{3}$

$X3 \leftarrow z - \frac{x}{3}$

$X4 \leftarrow \frac{1}{3} \cdot (z - x)$

$M_{sum} \leftarrow P \cdot (h + y + d) + b \cdot (-P1 \cdot X1 - P2 \cdot X2 - P3 \cdot X3 + P4 \cdot X4)$

d

Check for 2 load cases. Case 1 has load P acting as shown on Figure A. Case 2 has load P acting in the opposite direction.

Case 1:

$d_{c1} := \text{ShaftD}(d_o, P, R_1, R_2, b, h, y)$ $d_{c1} = 11.18\,\text{ft}$

$z_{c1} := \frac{2}{d_{c1}\cdot(R_1 + R_2)}\cdot\left(\frac{R_2\cdot d_{c1}^{\,2}}{2} - \frac{R_2\cdot d_o^{\,2}}{2} - \frac{P}{b}\right)$ $z_{c1} = 5.102\,\text{ft}$

$x_{c1} := \frac{R_2\cdot z_{c1}\cdot(d_{c1} - z_{c1})}{R_1\cdot d_{c1} + R_2\cdot(d_{c1} - z_{c1})}$ $x_{c1} = 1.797\,\text{ft}$

$P4_{c1} := R_1\cdot d_{c1}\cdot(z_{c1} - x_{c1})\cdot\frac{1}{2}$ $P4_{c1} = 12935\,\text{ft}^2\,\frac{\text{psf}}{\text{ft}}$

Case 2:

$d_{c2} := \text{ShaftD}(d_o, P, R_2, R_1, b, h, y)$ $d_{c2} = 11.18\,\text{ft}$

$z_{c2} := \frac{2}{d_{c2}\cdot(R_1 + R_2)}\cdot\left(\frac{R_1\cdot d_{c2}^{\,2}}{2} - \frac{R_1\cdot d_o^{\,2}}{2} - \frac{P}{b}\right)$ $z_{c2} = 5.102\,\text{ft}$

$x_{c2} := \frac{R_1\cdot z_{c2}\cdot(d_{c2} - z_{c2})}{R_2\cdot d_{c2} + R_1\cdot(d_{c2} - z_{c2})}$ $x_{c2} = 1.797\,\text{ft}$

$P4_{c2} := R_2\cdot d_{c2}\cdot(z_{c2} - x_{c2})\cdot\frac{1}{2}$ $P4_{c2} = 12935\,\text{ft}^2\,\frac{\text{psf}}{\text{ft}}$

Determine Shaft Lateral Pressures and Moment Arms for Controlling Case:

$d := \max(d_{c1}, d_{c2})$ $d = 11.18\,\text{ft}$

$R_a := \text{if}(d_{c2} \geq d_{c1}, R_1, R_2)$ $R_a = 700\,\frac{\text{psf}}{\text{ft}}$ $R_b := \text{if}(d_{c2} \geq d_{c1}, R_2, R_1)$ $R_b = 700\,\frac{\text{psf}}{\text{ft}}$

$z := \frac{2}{d\cdot(R_a + R_b)}\cdot\left(\frac{R_a\cdot d^2}{2} - \frac{R_a\cdot d_o^{\,2}}{2} - \frac{P}{b}\right)$ $z = 5.102\,\text{ft}$ $x := \frac{R_a\cdot z\cdot(d - z)}{R_b\cdot d + R_a\cdot(d - z)}$ $x = 1.797\,\text{ft}$

$P1 := (R_a\cdot d_o)\cdot(d - d_o - z)$ $P1 = 1953\,\frac{\text{lbf}}{\text{ft}}$ $X1 := \frac{z + d - d_o}{2}$ $X1 = 7.892\,\text{ft}$

$P2 := R_a\cdot(d - d_o - z)^2\cdot\frac{1}{2}$ $P2 = 10901\,\frac{\text{lbf}}{\text{ft}}$ $X2 := \frac{2\cdot z + d - d_o}{3}$ $X2 = 6.962\,\text{ft}$

$P3 := R_a\cdot(d - z)\cdot x\cdot\frac{1}{2}$ $P3 = 3825\,\frac{\text{lbf}}{\text{ft}}$ $X3 := z - \frac{x}{3}$ $X3 = 4.503\,\text{ft}$

$P4 := R_b\cdot d\cdot(z - x)\cdot\frac{1}{2}$ $P4 = 12935\,\frac{\text{lbf}}{\text{ft}}$ $X4 := \frac{1}{3}\cdot(z - x)$ $X4 = 1.102\,\text{ft}$

$M_{sum} := P\cdot(h + y + d) + b\cdot(-P1\cdot X1 - P2\cdot X2 - P3\cdot X3 + P4\cdot X4)$ $M_{sum} = -0.13163\,\text{lbf}\cdot\text{ft}$

Shaft Design Values:

The Maximum Shear will occur at the bolts or at the top of area 4 on Figure A:

$V_{shaft} := \max\left(P, P4_{c1} \cdot b, P4_{c2} \cdot b\right)$ $V_{shaft} = 32339\,lbf$

The Maximum Moment in the shaft will occur where the shear = 0.

Assume that the point where shear = 0 occurs in areas 1 and 2 on Figure A.

Check for Case 1:

$s_{c1} := -d_o + \sqrt{d_o^{\,2} + \frac{2 \cdot P}{R_2 \cdot b}}$ $s_{c1} = 2.808\,ft$

$M_{shaftc1} := P \cdot \left(h + y + d_o + s_{c1}\right) - R_2 \cdot d_o \cdot b \cdot s_{c1}^{\,2} \cdot \frac{1}{2} - R_2 \cdot b \cdot s_{c1}^{\,3} \cdot \frac{1}{6}$ $M_{shaftc1} = 152094\,lbf \cdot ft$

Check that the point where shear = 0 occurs in areas 1 and 2 on Figure A:

$Check1 := if\left[s_{c1} \le \left(d_{c1} - d_o - z_{c1}\right), "OK", "NG"\right]$ $Check1 = "OK"$

Check for Case 2:

$s_{c2} := -d_o + \sqrt{d_o^{\,2} + \frac{2 \cdot P}{R_1 \cdot b}}$ $s_{c2} = 2.808\,ft$

$M_{shaftc2} := P \cdot \left(h + y + d_o + s_{c2}\right) - R_1 \cdot d_o \cdot b \cdot s_{c2}^{\,2} \cdot \frac{1}{2} - R_1 \cdot b \cdot s_{c2}^{\,3} \cdot \frac{1}{6}$ $M_{shaftc2} = 152094\,lbf \cdot ft$

Check that the point where shear = 0 occurs in areas 1 and 2 on Figure A:

$Check2 := if\left[s_{c2} \le \left(d_{c2} - d_o - z_{c2}\right), "OK", "NG"\right]$ $Check2 = "OK"$

$M_{shaft} := \max\left(M_{shaftc1}, M_{shaftc2}\right)$ $M_{shaft} = 152094\,lbf \cdot ft$

Anchor Bolt and Panel Post Design Values:

$V_{bolt} := P$ $V_{bolt} = 9360\,lbf$

$M_{bolt} := P \cdot (h + y)$ $M_{bolt} = 131040\,lbf \cdot ft$

Panel Design Value (about a vertical axis):

Find Design Moment for a 1 ft wide strip of wall (between panel posts) for the panel flexure design

$w_{panel} := \max\left[P_w, \max(A \cdot f, 0.1) \cdot \left(4in \cdot w_c\right)\right]$ $w_{panel} = 25.0\,psf$

$$M_{panel} := 1.3\frac{w_{panel}\cdot L^2}{8} \qquad M_{panel} = 585\,\frac{lbf\cdot ft}{ft}$$

Panel Post Resistance:

$Cl_{pa} := 1.0in$ Clear Cover to Ties

$h_{pa} := 17in$ Depth of Post

$b_{pa} := 10in$ Width of Post

$bar_A := 10$ Per Design Requirements

Check Flexural Resistance (Std. Spec. 8.16.3):

$\phi_f := 0.90$ Std. Spec. 8.16.1.2.2

$d_{pa} := h_{pa} - Cl_{pa} - dia(3) - \frac{dia(bar_A)}{2}$ $d_{pa} = 14.99\,in$ Effective depth

$A_s := 2\cdot A_b(bar_A)$ $A_s = 2.54\,in^2$

$a := \frac{A_s\cdot f_y}{0.85\cdot f'c\cdot b_{pa}}$ $a = 4.482\,in$

$M_n := A_s\cdot f_y\cdot\left(d_{pa} - \frac{a}{2}\right)$ $M_n = 161910\,lbf\cdot ft$

$\phi_f\cdot M_n = 145719\,lbf\cdot ft$

$Check3 := if(\phi_f\cdot M_n \geq M_{bolt}, "OK", "NG")$ Check3 = "OK"

Check Maximum Reinforcement (Std. Spec. 8.16.3.1):

$\rho_b := \frac{0.85\cdot\beta_1\cdot f'c}{f_y}\cdot\left(\frac{87000\cdot psi}{87000\cdot psi + f_y}\right)$ $\rho_b = 0.029$

$\rho := \frac{A_s}{b_{pa}\cdot d_{pa}}$ $\rho = 0.01694$

$Check4 := if(\rho \leq 0.75\cdot\rho_b, "OK", "NG")$ Check4 = "OK"

Check Minimum Reinforcement (Std. Spec. 8.17.1.1):

$S_a := \frac{b_{pa}\cdot h_{pa}^2}{6}$ $S_a = 481.7\,in^3$

$M_{cra} := f_r\cdot S_a$ $M_{cra} = 19040\,lbf\cdot ft$

$Check5 := if(\phi_f\cdot M_n \geq \min(1.2\cdot M_{cra}, 1.33\cdot M_{bolt}), "OK", "NG")$ Check5 = "OK"

Check Shear (Std. Spec. 8.16.6) - Note: Shear Capacity of stirrups neglected:

$\phi_v := 0.85$ Std. Spec. 8.16.1.2.2

$V_{ca} := 2 \cdot \sqrt{\frac{f'c}{psi}} \cdot psi \cdot b_{pa} \cdot d_{pa}$ $V_{ca} = 18961\,lbf$

$Check6 := if\left(\phi_v \cdot V_{ca} \geq V_{bolt}, "OK", "NG"\right)$ Check6 = "OK"

Panel Post Base Resistance:

$b_{pb} := 9in$ Width of Panel Post Base $bar_B := 9$ Per Design Requirements

$h_{pb} := 17.5in$ Depth of Panel Post Base

Check Flexural Resistance (Std. Spec. 8.16.3):

$\phi_f = 0.9$ Std. Spec. 8.16.1.2.2

$d_{pb} := h_{pb} - 0.75in$ $d_{pb} = 16.75\,in$ Effective depth

$A_s := 2 \cdot A_b\left(bar_B\right)$ $A_s = 2\,in^2$

$a := \frac{A_s \cdot f_y}{0.85 \cdot f'c \cdot b_{pb}}$ $a = 3.922\,in$

$M_n := A_s \cdot f_y \cdot \left(d_{pb} - \frac{a}{2}\right)$ $M_n = 147892\,lbf \cdot ft$

$\phi_f \cdot M_n = 133103\,lbf \cdot ft$

$Check7 := if\left(\phi_f \cdot M_n \geq M_{bolt}, "OK", "NG"\right)$ Check7 = "OK"

Check Maximum Reinforcement (Std. Spec. 8.16.3.1):

$\rho_b := \frac{0.85 \cdot \beta_1 \cdot f'c}{f_y} \cdot \left(\frac{87000 \cdot psi}{87000 \cdot psi + f_y}\right)$ $\rho_b = 0.029$

$\rho := \frac{A_s}{b_{pb} \cdot d_{pb}}$ $\rho = 0.01327$

$Check8 := if\left(\rho \leq 0.75 \cdot \rho_b, "OK", "NG"\right)$ Check8 = "OK"

Check Minimum Reinforcement (Std. Spec. 8.17.1.1):

$S_b := \frac{b_{pb} \cdot h_{pb}^2}{6}$ $S_b = 459.4\,in^3$

$M_{crb} := f_r \cdot S_b$ $M_{crb} = 18158\,lbf \cdot ft$

$Check9 := if\left(\phi_f \cdot M_n \geq \min\left(1.2 \cdot M_{crb}, 1.33 \cdot M_{bolt}\right), "OK", "NG"\right)$ Check9 = "OK"

Check Shear (Std. Spec. 8.16.6) - Note: Shear Capacity of stirrups neglected:

$\phi_v = 0.85$ Std. Spec. 8.16.1.2.2

$V_{cb} := 2 \cdot \sqrt{\frac{f'c}{psi}} \cdot psi \cdot b_{pb} \cdot d_{pb}$ $V_{cb} = 19069\,lbf$

$Check10 := if\left(\phi_V \cdot V_{cb} \geq V_{bolt}, "OK", "NG"\right)$ Check10 = "OK"

Required Splice Length (Std. Spec. 8.25 and 8.32):

Basic Development Length (Std. Spec. 8.25.1):

$$l_{basic}(bar) := \begin{cases} \max\left(\frac{0.04 \cdot A_b(bar) \cdot f_y}{\sqrt{\frac{f'c}{psi}} \cdot psi \cdot in}, 0.0004 \cdot dia(bar) \cdot \frac{f_y}{psi}\right) & \text{if } bar \leq 11 \\ \frac{0.085 \cdot f_y}{\sqrt{\frac{f'c}{psi}} \cdot psi} \cdot in & \text{if } bar = 14 \\ \frac{0.11 \cdot f_y}{\sqrt{\frac{f'c}{psi}} \cdot psi} \cdot in & \text{if } bar = 18 \\ "error" & \text{otherwise} \end{cases}$$

$l_{basicA} := l_{basic}(bar_A)$ $l_{basicA} = 4.016\,ft$

$l_{basicB} := l_{basic}(bar_B)$ $l_{basicB} = 3.162\,ft$

Development Length (Std. Spec. 8.25):

For top reinforcement placed with more than 12 inches of concrete cast below (Std. Spec. 8.25.2.1):

$l_{dA} := l_{basicA} \cdot 1.4$ $l_{dA} = 5.623\,ft$

$l_{dB} := l_{basicB} \cdot 1.4$ $l_{dB} = 4.427\,ft$

Required Lapsplice (Y):

The required lapsplice Y is the maximum of the required lap splice length of bar A (using a Class C splice), the development length of bar B, or 2'-0" per BDM 5.1.2.D.

$LapSplice := \max\left(1.7 \cdot l_{dA}, l_{dB}, 2 \cdot ft\right)$ $LapSplice = 9.558\,ft$

Note: Lap Splices are not allowed for bar sizes greater than 11 per AASHTO Std. Spec. 8.32.1.1.

$Check11 := if\left(bar_A \leq 11 \wedge bar_B \leq 11, "OK", "NG"\right)$ Check11 = "OK"

Anchor Bolt Resistance (Std. Spec. 10.56):

$V_{bolt} = 9360\,lbf$ $V_{bolt} = 9.36\,kip$

$M_{bolt} = 131040\,lbf \cdot ft$ $M_{bolt} = 1572.48\,kip \cdot in$

$d_{bolt} := 1.0 \cdot in$ Per Design Requirements

$A_{bolt} := \frac{\pi \cdot d_{bolt}^2}{4}$ $A_{bolt} = 0.785\,in^2$

$F_t := 30 \cdot ksi$ Std. Spec. Tbl. 10.56A for A307

$F_v := 18 \cdot ksi$ Std. Spec. Tbl. 10.56A for A307

$PanelAxialLoad := \left(4in \cdot \frac{L}{2} + 13in \cdot 10in\right) \cdot (2 \cdot h + y - 3in) \cdot w_c$ $PanelAxialLoad = 11.959\,kip$

$f_a := \frac{PanelAxialLoad}{4 \cdot A_{bolt}}$ $f_a = 3.807\,ksi$ Axial Compressive Stress

$f_v := \frac{V_{bolt}}{4 \cdot A_{bolt}}$ $f_v = 2.98\,ksi$ Shear Stress

$Check12 := if\left(f_v \le F_v, "OK", "NG"\right)$ $Check12 = "OK"$

$f_t := \frac{M_{bolt}}{13.5in} \cdot \frac{1}{2 \cdot A_{bolt}} - f_a$ $f_t = 70.35\,ksi$ Tensile Stress

$F_{t1} := if\left[\frac{f_v}{F_v} \le 0.33, F_t, F_t \cdot \sqrt{1 - \left(\frac{f_v}{F_v}\right)^2}\right]$ $F_{t1} = 30\,ksi$ Std. Spec. 10.56.1.3.3

$Check13 := if\left(f_t \le F_{t1}, "OK", "NG"\right)$ $Check13 = "NG"$

Design Summary:

Wall Height:	$H = 24\,ft$
Required Shaft Depth:	$d = 11.18\,ft$
Maximum Shaft Shear:	$V_{shaft} = 32339\,lbf$
Maximum Shaft Moment:	$M_{shaft} = 152094\,lbf \cdot ft$
Maximum Shaft Moment Accuracy Check (Case 1):	Check1 = "OK"
Maximum Shaft Moment Accuracy Check (Case 2):	Check2 = "OK"
Bar A:	$bar_A = 10$
Post Flexural Resistance (Bar A):	Check3 = "OK"
Maximum Reinforcement Check (Bar A):	Check4 = "OK"
Minimum Reinforcement Check (Bar A):	Check5 = "OK"
Post Shear Check (Bar A):	Check6 = "OK"
Bar B:	$bar_B = 9$
Post Flexural Resistance (Bar B):	Check7 = "OK"
Maximum Reinforcement Check (Bar B):	Check8 = "OK"
Minimum Reinforcement Check (Bar B):	Check9 = "OK"
Post Shear Check (Bar B):	Check10 = "OK"
Lap Splice Length:	LapSplice = 9.558 ft
Lap Splice Allowed Check:	Check11 = "OK"
Bolt Diameter:	$d_{bolt} = 1\,in$
Anchor Bolt Shear Stress Check:	Check12 = "OK"
Anchor Bolt Tensile Stress Check:	Check13 = "NG"

Chapter 6 Structural Steel Contents

6.0 Structural Steel 6.0-1
6.0.1 Introduction 6.0-1
6.0.2 Special Requirements for Steel Bridge Rehabilitation or Modification 6.0-1

6.1 Design Considerations 6.1-1
6.1.1 Codes, Specification, and Standards 6.1-1
6.1.2 Preferred Practice 6.1-1
6.1.3 Preliminary Girder Proportioning 6.1-2
6.1.4 Estimating Structural Steel Weights 6.1-2
6.1.5 Bridge Steels 6.1-4
6.1.6 Available Plate Sizes 6.1-5
6.1.7 Girder Segment Sizes 6.1-5
6.1.8 Computer Programs 6.1-5
6.1.9 Fasteners 6.1-5

6.2 Girder Bridges 6.2-1
6.2.1 General 6.2-1
6.2.2 I-Girders 6.2-1
6.2.3 Tub or Box Girders 6.2-1
6.2.4 Fracture Critical Superstructures 6.2-3

6.3 Design of I-Girders 6.3-1
6.3.1 Limit States for AASHTO LRFD 6.3-1
6.3.2 Composite Section 6.3-1
6.3.3 Flanges 6.3-1
6.3.4 Webs 6.3-2
6.3.5 Transverse Stiffeners 6.3-2
6.3.6 Longitudinal Stiffeners 6.3-2
6.3.7 Bearing Stiffeners 6.3-2
6.3.8 Crossframes 6.3-3
6.3.9 Bottom Laterals 6.3-4
6.3.10 Bolted Field Splice for Girders 6.3-4
6.3.11 Camber 6.3-5
6.3.12 Roadway Slab Placement Sequence 6.3-6
6.3.13 Bridge Bearings for Steel Girders 6.3-7
6.3.14 Surface Roughness and Hardness 6.3-7
6.3.15 Welding 6.3-9
6.3.16 Shop Assembly 6.3-10

6.4 Plan Details 6.4-1
6.4.1 General 6.4-1
6.4.2 Structural Steel Notes 6.4-1
6.4.3 Framing Plan 6.4-1
6.4.4 Girder Elevation 6.4-1
6.4.5 Typical Girder Details 6.4-2
6.4.6 Crossframe Details 6.4-2
6.4.7 Camber Diagram and Bearing Stiffener Rotation 6.4-2
6.4.8 Bridge Deck 6.4-3
6.4.9 Handrail Details, Inspection Lighting, and Access 6.4-3
6.4.10 Box Girder Details 6.4-4

6.5 Shop Plan Review 6.5-1

6.99 References 6.99-1

Appendix 6.4-A1 Framing Plan 6.4-A1
Appendix 6.4-A2 Girder Elevation 6.4-A2
Appendix 6.4-A3 Girder Details 6.4-A3
Appendix 6.4-A4 Steel Plate Girder Field Splice 6.4-A4
Appendix 6.4-A5 Example Crossframe Details 6.4-A5
Appendix 6.4-A6 Camber Diagram 6.4-A6
Appendix 6.4-A7 Steel Plate Girder Roadway Section 6.4-A7
Appendix 6.4-A8 Steel Plate Girder Slab Plan 6.4-A8
Appendix 6.4-A9 Handrail 6.4-A9
Appendix 6.4-A10 Box Girder Geometrics and Proportions 6.4-A10
Appendix 6.4-A11 Example Box Girder Details 6.4-A11
Appendix 6.4-A12 Example Box Girder Pier Diaphragm Details 6.4-A12
Appendix 6.4-A13 Example Box Girder Miscellaneous Details 6.4-A13

6.0 Structural Steel

6.0.1 Introduction

This chapter primarily covers design and construction of steel plate girder bridge superstructures. Because of their limited application, other types of steel superstructures (truss, arch, cable stayed, suspension, etc.) are not addressed.

Plate girder bridges are commonly used for river crossings and curved interchange ramps. Typical span lengths range from 150 to 300 feet. Steel girders are also being used where limited vertical clearance requires shallow superstructure depth. They may be set over busy highway lanes with a minimum of disruption and falsework, similar to precast concrete elements. Longitudinal launching of steel framing and transverse rolling of completed steel structures have been done successfully.

English units are the current standard for detailing. Metric units may be used on a case-by-case basis. Widening or rehabilitation plan units should be consistent with the original.

6.0.2 Special Requirements for Steel Bridge Rehabilitation or Modification

As part of steel bridge rehabilitation or modification, calculations shall be made to demonstrate the adequacy of existing members and connections, with special attention given to fracture critical components such as truss gusset plates. When structural modifications or other alterations result in significant changes in stress level, deficiencies shall also be corrected. A thorough survey of impacted components shall be made to determine section loss due to corrosion or prior modification.

6.1 Design Considerations

6.1.1 Codes, Specification, and Standards

Steel highway bridges shall be designed to the following codes and specifications:

- AASHTO LRFD *Bridge Design Specifications, fifth Edition*
- AASHTO *Guide Specifications for Horizontally Curved Steel Girder Highway Bridges, 2003* (Retained for reference, the body of curved girder specifications has been incorporated in the main text of the LRFD code with the 2005 interims)
- AASHTO/AWS D1.5M/D1.5: 2010 *Bridge Welding Code*
- ANSI/AWS A2.4-98 *Standard Symbols for Welding, Brazing, and Nondestructive Examination*

The following codes and specifications shall govern steel bridge construction:

- WSDOT *Standard Specifications for Road, Bridge, and Municipal Construction,* latest edition
- AASHTO/AWS D1.5M/D1.5: 2008 *Bridge Welding Code*
- AASHTO *Guide Specifications for Highway Bridge Fabrication with HPS70W Steel*, latest edition

The following AASHTO/NSBA Steel Bridge Collaboration publications are available to aid in the design and fabrication of steel bridges:

- *Design Drawing Presentation Guidelines*
- *Guidelines for Design for Constructibility*
- *Shop Detail Drawing Presentation Guidelines*
- *Steel Bridge Fabrication Guide Specification*
- *Steel Bridge Fabrication QC/QA Guide Specification*
- *Guide Specification for Coating Systems with Inorganic Zinc-Rich Primer*

For checking the capacity of gusset plates in fracture critical trusses:

- *Load Rating Guidance and Examples for Bolted and Riveted Gusset Plates in Truss Bridges, Publication No. FHWA-if-09-014*

6.1.2 Preferred Practice

Unshored, composite construction is used for most plate girder bridges. Shear connectors are placed throughout positive and negative moment regions, for full composite behavior. One percent longitudinal deck steel, placed in accordance with AASHTO LRFD article 6.10.1.7, ensures adequate deck performance in negative moment regions. For service level stiffness analysis, such as calculating live load moment envelopes, the slab may be considered composite and uncracked for the entire bridge length, provided the above methods are used. See AASHTO LRFD articles 6.6.1.2.1 and 6.10.1.5. For negative moment at strength limit states, the slab is ignored while reinforcing steel is included for stress and section property calculations. Where span arrangement is not well balanced, these assumptions may not apply.

Plastic design may be utilized for simple span and positive moment regions of medium to long span plate girder bridges. In negative moment regions, plastic design is only economical for short span beams.

Currently, economical design requires simplified fabrication with less emphasis on weight reduction. The number of plate thicknesses and splices should be minimized. Also, the use of fewer girder lines, spaced at a maximum of about 14 feet, saves on fabrication, shipping, painting, and future inspection. Widely spaced girders will have heavier flanges, hence, greater stability during construction. Normally, eliminating a girder line will not require thickening remaining webs or increasing girder depth. The increased shear requirement can be met with a modest addition of web stiffeners or slightly thicker webs at interior piers.

For moderate to long spans, partially stiffened web design is the most economical. This method is a compromise between slender webs requiring transverse stiffening throughout and thicker, unstiffened webs. Stiffeners used to connect crossframes shall be welded to top and bottom flanges. Jacking stiffeners shall be used adjacent to bearing stiffeners, on girder or diaphragm webs, in order to accommodate future bearing replacement. Coordinate jack placement in substructure and girder details.

Steel framing should consist of main girders and crossframes. Bottom lateral systems should only be used when temporary bracing is not practical. Where lateral systems are needed, they should be detailed carefully for adequate fatigue life.

Standard corrosion protection for steel bridges is a three-coat paint system, west of the Cascades and where paint is required for appearance. Weathering steel should be considered for dry, eastern regions. When weathering steel is used and appearance is not critical, a single shop coat of inorganic zinc-rich primer may be considered in coastal regions.

WSDOT does not currently allow the use of steel stay-in-place deck forms.

6.1.3 Preliminary Girder Proportioning

The superstructure depth is initially determined during preliminary plan development and is based upon the span/depth ratios provided in Chapter 2 of this manual. The depth may be reduced to gain vertical clearance, but the designer should verify live load deflection requirements are met. See AASHTO LRFD Table 2.5.2.6.3-1. It is office practice to limit live load deflections in accordance with the optional criteria of AASHTO LRFD articles 2.5.2.6.2 and 3.6.1.3.2.

The superstructure depth is typically shown as the distance from the top of the concrete roadway slab to the bottom of the web. Web depths are generally detailed in multiples of 6 inches.

On straight bridges, interior and exterior girders should be detailed as equal. Spacing should be such that the distribution of wheel loads on the exterior girder is close to that of the interior girder. The number of girder lines should be minimized, with a maximum spacing of 14 feet. Three or more girders lines are considered redundant. If a non-redundant bridge is proposed, approval must be obtained from the Bridge Design Engineer.

6.1.4 Estimating Structural Steel Weights

For the preliminary quantities or preliminary girder design, an estimate of steel weights for built-up plate composite “I” girders can be obtained from Figure 6.1.4-1 This figure is based upon previous designs with AASHTO HS-20 live loads with no distinction between service load designs and load factor designs. This chart also provides a good double check on final quantities.

The weights shown include webs, flanges, and all secondary members (web stiffeners, diaphragms, crossframe, lateral systems, gusset plates) plus a small allowance for weld metal, bolts, and shear connectors.

Both straight and curved box girder quantities may be estimated with the chart, using a 10 to 20% increase.

The chart should only be used for a lower bound estimate of curved I-girder weight. Roadway width and curvature greatly influence girder weight, including cross frames.

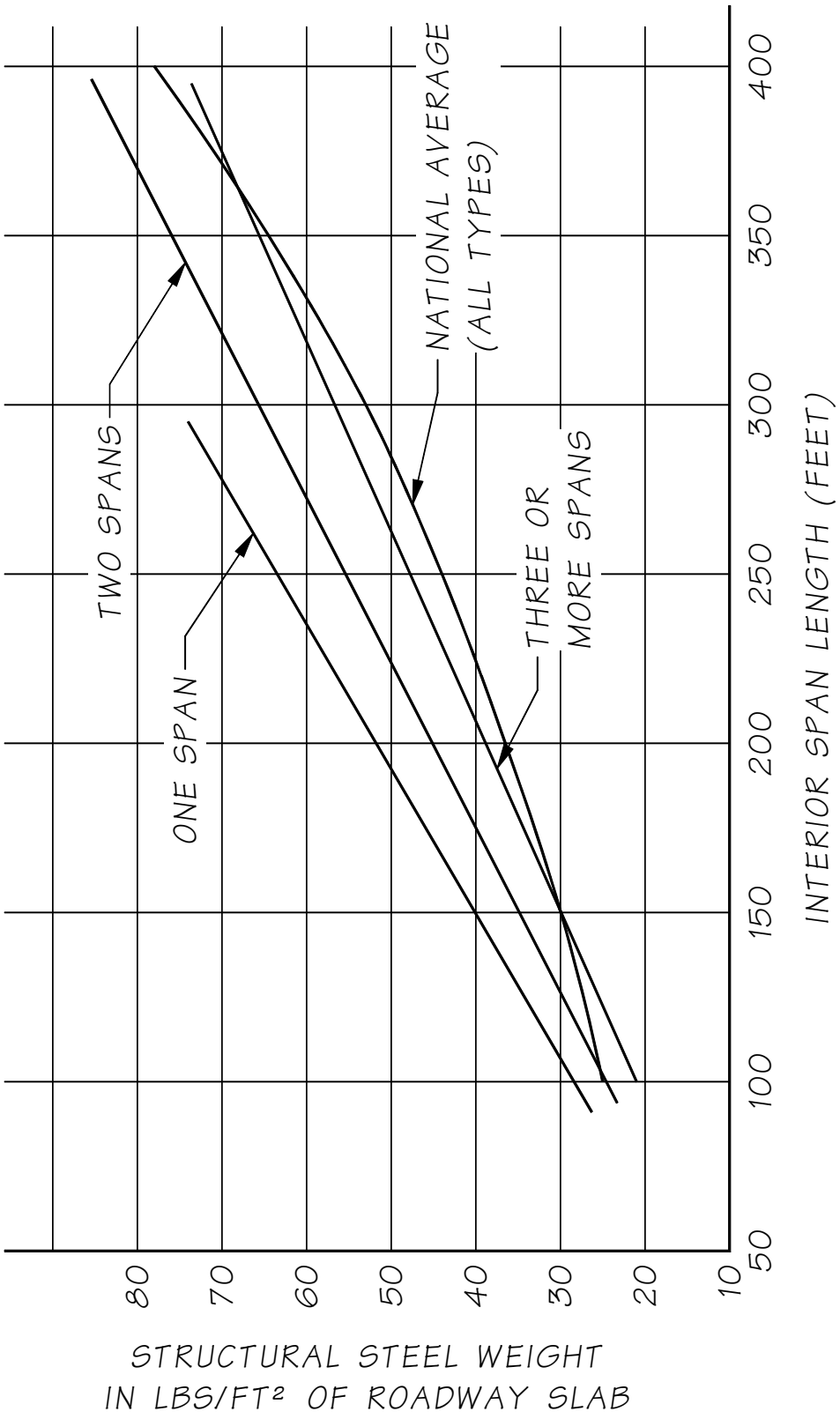

Composite Welded Steel Plate "I" Girder
Figure 6.1.4-1.

6.1.5 Bridge Steels

The most common types of steel used for bridges are now grouped in ASTM A 709 or AASHTO M 270 specifications. The following table shows equivalent designations. Grades of steel are based on minimum yield point.

ASTM	ASTM A 709/ AASHTO M 270
A 36	Grade 36
A 572 gr 50	Grade 50
A 992 (W shapes)	Grade 50S
A 588	Grade 50W
	Grade HPS50W
A 852	Grade 70W
---	Grade HPS70W
A 514*	Grade 100*
	Grade l00W*
* Minimum yield strength is 90 ksi for plate thickness greater than 2½″.	

Plates and rolled sections are available is these specifications and grades. Rolled sections include beams (W, S, and M shapes), H-piles, tees, channels, and angles. These materials are prequalified under the Bridge Welding Code. The common specification for wide flange beams is now ASTM A 992.

Use AASHTO M 270 grades 50 or 50W for plate girders. The fabricated costs of structural carbon and structural low alloy steel plate girders are about equal. AASHTO now recommends grade HPS70W instead of grade 70W for bridge use. HPS70W can be economical if used selectively in hybrid design. For moderate spans consider HPS70W for the bottom flanges throughout and top flanges near interior piers. The use of M 270 grade 100 or 100W requires approval by the Bridge Design Engineer, and should not be used until grade HPS100W is available.

All main load-carrying members or components subject to tensile stress shall be identified in the plans and be required to meet the minimum Charpy V-notch (CVN) fracture toughness values as specified in AASHTO LRFD Table 6.6.2-2, temperature zone 2. Fracture critical members or components shall also be designated in the plans.

Availability of weathering steel can be a problem for some sections. For example, steel suppliers do not stock angles or channels in weathering steel. Weathering steel wide flange and tee sections are difficult to locate or require a mill order. ASTM A 709 and AASHTO M 270 bridge steels are not stocked by local service centers. The use of bridge steel should be restricted to large quantities such as found in typical plate girder projects. The older ASTM specification steels, such as A 36, should be specified when a fabricator would be expected to purchase from local service centers. The older AASHTO designations, such as M183, have been dropped.

Structural tubes and pipes are covered by other specifications. See the latest edition of the AISC *Manual of Steel Construction* for selection and availability. These materials are not considered prequalified under the Bridge Welding Code. They are covered under the Structural Welding Code AWS D1.1. Structural tubing ASTM A 500 is not recommended for dynamic loading applications unless minimum CVN requirements are specified.

6.1.6 Available Plate Sizes

Readily available lengths and thicknesses of steel plates should be used to minimize costs. Tables of standard plate sizes have been published by various steel mills and should be used for guidance. These tables are available through the steel specialist, or online.

In general, an individual plate should not exceed 12′-6″ feet in width, including camber requirements, or a length of about 60 feet. If either or both of these dimensions are exceeded, a butt splice is required and should be shown or specified on the plans. Some plates may be available in lengths over 90 feet, so web splice locations should be considered optional. Quenched and tempered plates are limited to 50 feet, based on oven size.

Plate thicknesses of less than 5/16 inches should not be used for bridge applications.

When metric units are used, all steel dimensions, including thickness, should be hard converted. For example, specify 25 mm, not 25.4 mm plate.

Preferred plate thicknesses, English units, are a follows:

- 5/16″ to ⅞″ in 1/16″ increments
- ⅞″ to 1 ¼″ in ⅛″ increments
- 1¼″ to 4″ in ¼″ increments

6.1.7 Girder Segment Sizes

Locate bolted field splices so that individual girder segments can be handled, shipped, and erected without imposing unreasonable requirements on the contractor. Crane limitations need to be considered in congested areas near traffic or buildings. Transportation route options between the girder fabricator and the bridge site can affect the size and weight of girder sections allowed. Underpasses with restricted vertical clearance in sag vertical curves can be obstructions to long, tall segments shipped upright. The region should help determine the possible routes, and the restrictions they impose, during preliminary planning or early in the design phase.

Segment lengths should be limited to 150 feet, depending upon cross section. Long, slender segments can be difficult to handle and ship due to their flexibility. Horizontal curvature of girder segments may increase handling and shipping concerns. Out-to-out width of curved segments, especially box girders, should not exceed 14 feet without additional travel permits and requirements. Weight is seldom a controlling factor for I-girders. However, 40 tons is a practical limit for some fabricators. Limit weight to a maximum of 100 tons if delivery by truck is anticipated.

Consider the structure's span length and the above factors when determining girder segment lengths. In general, field splices should be located at dead load inflection points. When spans are short enough, some field splices can be designated optional if resulting segment lengths and weights meet the shipping criteria.

6.1.8 Computer Programs

The designer should consult the design supervisor to determine the computer program best suited for a particular bridge type.

Office practice and good engineering principles require that the results of any computer program or analysis be independently verified for accuracy. Also, programs with built-in code checks must be checked for default settings. Default settings may reflect old code or office practice may supersede the code that the program was written for.

6.1.9 Fasteners

All bolted connections shall be friction type (slip-critical). Assume Class B faying surfaces where inorganic zinc primer is used. If steel will be given a full paint system in the shop, the primed faying surfaces need to be masked to maintain the Class B surface.

Properties of High-Strength Bolts

Material	Bolt Diameter	Tensile Strength ksi	Yield Strength ksi
AASHTO M 164	⅝ - 1 inc	120	92
(ASTM A325)	1⅛ - 1½ inc.	105	81
	Over 1½		Not Available
ASTM A 449	¼ - 1 inc	120	92
(No AASHTO	1⅛ - 1½ inc.	105	81
equivalent)	1¾ -3 inc.	90	58
	Over 3		Not Available
AASHTO			
M 314	¼ - 3 inc	125-150	105
(ASTM F 1554)			
Grade 105			
AASHTO			
M253	⅝ - 1½ inc.	150-170	130
(ASTM A 490)			
	Over 1½		Not Available
ASTM A 354	½ - 2½ inc.	150	130
Grade BD			
(No AASHTO	3 - 4 inc.	140	115
equivalent)	Over 4		Not Available

General Guidelines for Steel Bolts

A. **M 164 (A325**) – High strength steel, headed bolts for use in structural joints. These bolts may be hot-dip galvanized. Do not specify for anchor bolts.

B. **A449 –** High strength steel bolts and studs for general applications including anchor bolts. Recommended for use as anchor bolts where strengths equivalent to A325 bolts are desired. These bolts may be hot-dip galvanized. Do not use these anchor bolts for seismic applications due to low CVN impact toughness.

C. **M 314 (F1554) - Grade 105** – Higher strength anchor bolts to be used for larger sizes (1½″ to3″). When used in seismic applications, ASTM F 1554 shall be specified, since AASHTO M 314 lacks the CVN supplemental requirements. Specify supplemental CVN requirement S5 when these are used in seismic applications (most bridge bearings that resist lateral loads). Lower grades may also be suitable for sign structure foundations. This specification should also be considered for seismic restrainer rods, and may be galvanized.

D. **M 253 (A490) –** High strength alloy steel, headed bolts for use in structural joints. These bolts should not be galvanized, because of the high susceptibility to hydrogen embrittlement. In lieu of galvanizing, the application of an approved zinc rich paint may be specified. Do not specify for anchor bolts.

E. **A354 - Grade BD** – high strength alloy steel bolts and studs. These are suitable for anchor bolts where strengths equal to A490 bolts are desired. These bolts should not be galvanized. If used in seismic applications, specify minimum CVN toughness of 25 ft-lb at 40°F.

6.2 Girder Bridges

6.2.1 General

Once the material of choice, structural steel has been eclipsed by reinforced and prestressed concrete. Corrosion and fatigue cracking have contributed to unanticipated life cycle costs. Fabrication and material costs have also contributed to steel's relative cost disadvantage. Costs may be minimized by simplifying fabrication details, optimizing the number of girder lines, allowing for repetitive fabrication of components such as crossframes and stiffeners, and ensuring ease of shipping and erecting.

The specifications allow a combination of plastic design in positive moment regions and elastic design in negative moment regions. Plate girders, of the depths typically built in this state, have traditionally been designed to elastic limits or lower. Newer design methods may help reduce steel weight and narrow the cost gap between steel and concrete bridges. High performance steel can be used to advantage saving weight and painting.

6.2.2 I-Girders

Welded plate I-girders constitute the majority of steel girders designed by WSDOT. The I-girder represents an efficient use of material for maximizing stiffness. Its shortcoming is inefficiency in resisting shear. Office practice is to maintain constant web thickness and depth for short to medium span girders. Weight savings is achieved by minimizing the number of webs used for a given bridge. This also helps minimize fabrication, handling, and painting costs. Current office practice is to use a minimum of three girders to provide redundant load path structures. Two girder superstructures are considered non-redundant and hence, fracture critical.

Buckling behavior of relatively slender elements complicates steel plate girder design. Most strength calculations involve checks on buckling in some form. Local buckling can be a problem in flanges, webs, and stiffeners if compression is present. Also, overall stability shall be ensured throughout all stages of construction, with or without a bridge deck. The art of designing steel girders is to minimize material and fabrication expense while ensuring adequate strength, stiffness, and stability.

I-girders are an excellent shape for welding. All welds for the main components are easily accessible and visible for welding and inspection. The plates are oriented in the rolling direction to make good use of strength, ductility, and toughness of the structural steel. The web is attached to the top and bottom flanges with continuous fillet welds. Usually, they are made with automatic submerged arc welders. These welds are loaded parallel to the longitudinal axis and resist horizontal shear between the flanges and web. Minimum size welds based on plate thickness will satisfy strength and fatigue requirements in most cases. The flanges and webs are fabricated to full segment length with full penetration groove welds. These welds are inspected by ultrasound (UT) 100%. Tension welds, as designated in the plans, are also radiographed (RT) 100%. Office practice is to have flanges and webs fabricated full length before they are welded into the "I" shape. Weld splicing built-up sections results in poor fatigue strength and zones that are difficult to inspect. Quality welding and inspection requires good access for both.

6.2.3 Tub or Box Girders

Typical steel box girders for WSDOT are trapezoidal tub sections. Using single top flange plates to create true box sections is very uncommon when reinforced concrete decks are used. Tub girders will be referred to herein as box girders, as in AASHTO LRFD article 6.11.

The top lateral system placed inside the girder is treated as an equivalent plate, closing the open section, to increase torsional stiffness before slab curing. Although not required by the code, it helps ensure stability that may be overlooked during construction. Partial or temporary bracing may be used provided it is properly designed and installed. Dramatic construction failures have occurred due to insufficient bracing of box girders. Stability of the shape must be ensured for all stages of construction per AASHTO LRFD article 6.11.3. The cured deck serves to close the section for torsional stiffness. Internal crossframes or diaphragms are used to maintain the shape and minimize distortion loading on individual plates and welds making up the box. Box segments will have considerable torsional stiffness when top lateral bracing is provided. This may make fit-up in the field difficult.

The ability to make box girders with high torsional stiffness makes them a popular choice for short radius curved structures. Curved box girders, because of inherent torsional stiffness, behave differently than curved I-girders. Curved box girder behavior is approximated by the M/R method, rather than the V-load method. See curved girder references listed at the end of this chapter for complete description.

Straight box girders, when proportioned in accordance with AASHTO LRFD article 6.11.2 may be designed without consideration of distortional stresses. The range of applicability for live load distribution is based on:

$$0.5 \leq N_L \,/\, N_b \leq 1.5 \qquad (6.2.3\text{-}1)$$

which limits the number of lanes loading each box. Wide box girder spacing, outside this range, will require additional live load analysis. Consideration must be given to differential deflection between boxes when designing the bridge deck. Generally, use of crossframes between boxes is limited to long spans with curvature.

Box girders should be detailed for single bearings per box. If bearings are located under each web, distribution of loads is uncertain. Generally, plate diaphragms with access holes are used in place of pier crossframes.

With the exception of effects from inclined webs, top flanges and webs are designed as if they were part of individual I-girders.

The combined bottom flange is unique to box girders. In order to maximize web spacing while minimizing bottom flange width, office practice is to place webs out of plumb on a slope of 1 in 4. Wide plates present two difficulties: excessive material between shop splices and buckling behavior in compression zones (interior piers). To keep weight and plate thickness within reason, it is often necessary to stiffen the bottom flange in compression with longitudinal stiffeners. Office practice is to use tee sections for longitudinal stiffeners and channel bracing at crossframe locations (transverse stiffeners). If possible, bottom flange stiffeners are terminated at field splices. Otherwise, carefully ground weld terminations are needed in tension regions with high stress range. Due to the transverse flexibility of thin wide plates, stiffener plates are welded across the bottom flange at crossframe locations, combined with web vertical stiffeners. For the design of the bottom flange in compression, see AASHTO LRFD articles 6.11.8.2 and 6.11.11.2.

6.2.4 Fracture Critical Superstructures

Non-redundant, fracture critical single tub superstructures may sometimes be justified. In which case, approval for this bridge type must be obtained from the Bridge Design Engineer. Conditions that favor this option are narrow one lane ramps, especially with tightly curved alignments, at locations within existing mainline interchanges. Flyover ramps often fall into these constraints. The box section allows in-depth inspection access without significant disruption to mainline traffic. UBIT access over urban interstate lanes is becoming increasingly difficult to obtain.

Where curvature is significant, the box section is a stiffer, more efficient load carrying system than a twin I-girder system. If a twin I-girder system is to be used, approval must also be secured. Some form of permanent false decking or other inspection access needs to be included over mainline lanes that will be difficult to close for UBIT access. This access needs to be appropriate for fracture critical inspections. If curvature is not severe, the twin I-girder system may prove to be more economical than a single box.

The maximum roadway width for either a single box or twin I-girder superstructure is about 27 feet. Where roadway width exceeds this, additional girders should be used. Mainline structures, usually exceeding 38 feet in width, will require a minimum of three webs, with four webs being the preferred minimum.

Increased vertical clearance from mainline traffic should be obtained for either of these bridge types. A desirable minimum is 20 feet. Box sections tend to offer greater stiffness than equal depth I-girders, especially on curved alignment. The web depth may be reduced below AASHTO LRFD Table 2.5.2.6.3-1 minimums provided live load deflection criteria are met. However, avoid web depth less than 5′-0″ so that inspection access is within reason. The desirable minimum web depth for boxes is 6′-6″. Box sections with web depth of 6′-6″ should be capable of interior spans up to 250 feet. Main spans of 150 feet should be considered the low end of this girder type's economical range. Because of the proximity of flyover ramps to high numbers of observers, attempt to streamline their superstructure depths where economical and deflection criteria can be achieved.

Use high performance steels, AASHTO M270 grades HPS50W or HPS70W for these girder types. Grades of steel with equal CVN toughness may be considered, however the improved through-thickness properties of the HPS grades should also be considered. If practical, maintain a maximum flange thickness of 2″ when using HPS for better properties and plate availability. The improved toughness of HPS will lower the chance of sudden crack propagation if a crack does become visible to casual observation.

The limit state load modifier relating to redundancy, $\eta_r = 1.05$, as specified in AASHTO LRFD 1.3.4 shall be used in the design of non-redundant steel structures.

The AASHTO LRFD approximate live load distribution factors are not applicable to these girder types. The level rule or the preferred refined analysis shall be used. Where highly curved, only a refined analysis should be used.

6.3 Design of I-Girders

6.3.1 Limit States for AASHTO LRFD

Structural components shall be proportioned to satisfy the requirements of strength,extreme event, service, and fatigue limit states as outlined in AASHTO LRFD articles1.3.2 and 6.5.

Service limit states are included in Service I and Service II load combinations. Service I load combination is used to check the live load deflection limitations of AASHTO LRFD article 2.5.2.6. Service II load combination is the AASHTO LRFD equivalent of the LFD overload provisions. Service II places limits on permanent deflection, no yielding, slenderness of the web in compression, and slip of bolted connections.

The fatigue live load specified in AASHTO LRFD article 3.6.1.4 shall be used for checking girder details per article 6.6. A single fatigue truck, without lane loading or variable axle spacing, is placed for maximum and minimum effect to a detail under investigation. The impact is 15%, regardless of span length. The load factor is 1.5. It is generally possible to meet the constant amplitude fatigue limit (CAFL) requirement for details with good fatigue performance. Limiting the calculated fatigue range to the CAFL ensures infinite fatigue life. Webs shall be checked for fatigue loading in accordance with AASHTO LRFD article 6.10.5.3, using the calculated fatigue stress range for flexure or shear. Shear connector spacing shall be according to AASHTO LRFD article 6.10.10. Generally, the fatigue resistance (Zr) for ⅞″ diameter shear connectors can be taken as 4.2 kips for an infinite number of cycles (CAFL = 4.2 kips).

Flanges and webs must meet strength limit state requirements for both construction and final phases. Constructibility requirements for flanges and webs are covered in AASHTO LRFD article 6.10.3. Flexure resistance is specified in AASHTO LRFD articles 6.10.7 and 6.10.8; shear resistance is specified in AASHTO LRFD article 6.10.9

Pier crossframes shall be designed for seismic loading, extreme event load combination. Bolts are treated as bearing type connections with AASHTO LRFD article 6.5.4.2 resistance factors. The resistance factor for all other members is 1.0 at extreme limit state.

6.3.2 Composite Section

Live load plus impact is applied to the transformed composite section using Es/Ec, commonly denoted n. Long-term loading (dead load of barriers, signs, luminaries, overlays, etc.) is applied to the transformed composite section using 3n. Positive moments are applied to these composite sections accordingly, both for service and strength limit states. The slab may be considered effective in negative moment regions provided tensile stresses in the deck are below the modulus of rupture. This is generally possible for Service I load combination and fatigue analysis. For strength limit state loadings, the composite section includes longitudinal reinforcing while the deck is ignored.

6.3.3 Flanges

Flange thickness is limited to 4″ maximum in typical bridge plate, but the desirable maximum is 3″. The number of plate thicknesses used for a given project should be kept to a minimum. Generally, the bottom flange should be wider than the top flange. Flange width changes should be made at bolted field splices. Thickness transitions are best done at welded splices. AASHTO LRFD article 6.13.6.1.5 requires fill plates at bolted splices to be developed, if thicker than ¼″. Since this requires a significant increase in the number of bolts for thick fill plates, keeping the thickness transition ¼″ or less by widening pier segment flanges can be a better solution. Between field splices, flange width should be kept constant.

6.3.4 Webs

Maintain constant web thickness throughout the structure. If different web thickness is needed, the transition should be at a welded splice. Horizontal web splices are not needed unless web height exceeds 12′-6″. Vertical web splices for girders should be shown on the plans in an elevation view with additional splices made optional to the fabricator. All welded web splices on exterior faces of exterior girders and in tension zones elsewhere shall be ground smooth. Web splices of interior girders need not be ground in compression zones.

6.3.5 Transverse Stiffeners

These stiffeners shall be used in pairs at crossframe locations on interior girders and on the inside of webs of exterior girders. They shall be welded to the top flange, bottom flange and web at these locations. This detail is considered fatigue category C' for longitudinal flange stress. Stiffeners used between crossframes shall be located on one side of the web, welded to the compression flange, and cut short of the tension flange. Stiffeners located between crossframes in regions of stress reversal shall be welded to one side of the web and cut short of both flanges. Alternatively, they may be welded to both flanges if fatigue Category C' is checked. Transverse stiffeners may be dropped when not needed for strength. If crossframe spacing is less than 3 times the web depth, additional stiffeners may only be necessary near piers.

Stiffened webs require end panels to anchor the first tension field. The jacking stiffener to bearing stiffeners space shall not be used as the anchor panel. The first transverse stiffener is to be placed at no greater spacing than 1.5 times the web depth from the bearing or jacking stiffener.

Transverse stiffeners must be designed and detailed to meet AASHTO LRFD article 6.10.11.1. Where they are used to connect crossframes, they should be a minimum width of 8″ to accommodate two bolt rows.

6.3.6 Longitudinal Stiffeners

On long spans where web depths exceed 10 feet, comparative cost evaluations shall be made to determine whether the use of longitudinal stiffeners will be economical. The use of longitudinal stiffeners may be economical on webs 10 feet deep or greater. Weld terminations for longitudinal stiffeners are fatigue prone details. Longitudinal stiffener plates should be continuous, splices being made with full penetration welds before being attached to webs. Transverse stiffeners should be pieced to allow passage of longitudinal stiffeners.

Design of longitudinal stiffeners is covered by AASHTO LRFD article 6.10.11.3.

6.3.7 Bearing Stiffeners

Stiffeners are required at all bearings to enable the reaction to be transmitted from the web to the bearing. These stiffeners are designated as columns, therefore, must be vertical under total dead load. The connection of the bearing stiffener to flanges consists of partial penetration groove welds, of sufficient size to transmit design loads.

Pier crossframes may transfer large seismic lateral loads through top and bottom connections. Weld size must be designed to ensure adequate load path from deck and crossframes into bearings.

Design of bearing stiffeners is covered by AASHTO LRFD article 6.10.11.2.

6.3.8 Crossframes

The primary function of intermediate crossframes is to provide stability to individual girders or flanges. Crossframes or diaphragms are required at each support to brace girders; they should be as near to full-depth as practical. Crossframes share live load distribution between girders with the concrete deck. The approximate AASHTO LRFD live load distribution factors were based on the absence of intermediate crossframes. Where crossframes are present, the exterior girder distribution factors are also determined according to AASHTO LRFD article 4.6.2.2.2d (conventional approximation for loads on piles). On curved bridges, the crossframes also resist twisting of the superstructure. Pier crossframes are subjected to lateral loads from wind, earthquake, and curvature. These forces are transmitted from the roadway slab to the bearings by way of the pier crossframes. Intermediate crossframes also resist wind load to the lower half of the girders. The primary load path for wind is the concrete deck and pier diaphragms. Wind load on the bottom flange is shed incrementally to the deck through intermediate crossframes. The essential function, however, is to brace the compression flanges for all stages of construction and service life. As such, continuous span girders require bottom flange bracing near interior supports. Office practice requires intermediate crossframes, at spacing consistent with design assumptions. The 25 foot maximum spacing of older specifications is not maintained in the AASHTO LRFD code. A rectangular grid of girders and crossframes is not significantly stiff laterally before the deck is cured. Both wind and deck placement can cause noticeable deflections. In the case of deck placement, permanent sideway and rotation of the steel framing may result. Some form of temporary or permanent lateral bracing is therefore required.

Crossframes and connections should be detailed for repetitive fabrication, adjustment in the field, and openness for inspection and painting. Avoid back-to-back angles separated by gusset plates. These are difficult to repaint. Crossframes are generally patterned as K-frames or as X-frames. Typically the configuration selected is based on the most efficient geometry. The diagonals should closely approach a slope of 1:1 or 45°. Avoid conflicts with utilities passing between the girders. Detailing of crossframes should follow guidelines of economical steel bridge details promoted by the National Steel Bridge Alliance. Office practice is to bolt rather than weld individual pieces, to provide some field adjustment. Oversize holes are not allowed in crossframe connections if girders are curved.

Intermediate crossframes for straight girders with little or no skew should be designed as secondary members. Choose members that meet minimum slenderness requirements and design connections only for anticipated loads, not for 75% strength of member.

In general, crossframes should be installed parallel to piers for skew angles of 0° to 20°. For greater skew angles, other arrangements may be used. Consult with the design unit supervisor or the steel specialist for special requirements.

Intermediate crossframes for curved I-girders require special consideration. Curved girder systems should be designed according to AASHTO “Guide Specifications for Horizontally Curved Highway Bridges.” Crossframes for curved girder bridges are main load carrying members and tension components should be so designated in the plans. For highly curved systems, it is more efficient to keep members and connections concentric, as live loads can be significant. Welded connections should be carefully evaluated for fatigue.

Web stiffeners at crossframes shall be welded to top and bottom flanges. This practice minimizes out-of-plane bending of the girder web.

Bridge widening requires special attention to girder stability during slab placement. Lateral movement and rotation has been common with widening projects around the country. Narrow framing, such as a two girder widening, requires bracing to an existing structure. A common method for bracing is to install crossframes (in bay between existing and new girders) with only enough bolts installed to allow for differential deflection but no rotation. Remaining bolts can be installed through field-drilled holes after the slab has cured.

6.3.9 Bottom Laterals

Bottom lateral systems are expensive to install permanently. If possible, they should be avoided in favor of alternative bracing methods. They are seldom required in the completed structure, but may contribute to nuisance fatigue cracking or fracture in the main girders.

The primary function of a bottom lateral system is to stabilize the girders against lateral loads and translation before the deck hardens. The layout pattern is based on number of girder lines, girder spacing, and crossframe spacing. Cost considerations should include geometry, repetition, number, and size of connections. If used, limit bottom laterals to one or two bays.

For both straight and curved structures, bottom laterals carry dead and live loads, in proportion to distance from the neutral axis. They should be modeled in the structure to determine the actual forces the members experience. Since they carry slab dead load, they should be accounted for when calculating camber.

Where lateral gusset plates are fillet welded to girder webs, the fatigue stress range in the girder is limited to Category E without transition radius, or Category D with carefully made transition radius. The gusset plates should be bolted to the girder web in regions of high tension stress range.

For widening projects, bottom laterals are not needed since new can be braced against existing construction. Framing which is adequately braced should not require bottom laterals.

6.3.10 Bolted Field Splice for Girders

Office practice is to use bolted field splices. Splices are usually located at the dead load inflection point to minimize the design bending moment. See AASHTO LRFD articles 6.13.2 and 6.13.6.1 for bolted splice design requirements. A method for designing web splices is now outlined in AASHTO LRFD article 6.13.6.1.4b. Bolted web splices should not involve thin fill material. Thickness transitions for webs, if needed, should be done with welded shop splices.

Flange splice design is outlined in AASHTO LRFD article 6.13.6.1.4c. For splice plates at least ⅜″ thick and ⅞″ diameter bolts, threads may be excluded from all shear planes for a 25% increase in strength, per AASHTO LRFD article 6.13.2.7. Bolts designed with threads excluded from shear planes shall be designated as such in the plans. Generally, bolts in girder field splices may be designed for double shear.

A new requirement has been added for developing fillers used in bolted splices, AASHTO LRFD article 6.13.6.1.5. When fill plates are greater than ¼″, the splice or filler needs to be extended for additional bolts. As filler thickness increases, the shear resistance of bolts decreases. A way of minimizing filler thickness is to transition flange width for pier segments. Using equal plate thickness by this method has the added benefit of reducing the number of plate sizes in a project.

Splice bolts shall be checked for Strength load combinations and slip at Service II load combination. When faying surfaces are blasted and primed with inorganic zinc paint, a Class B surface condition is assumed.

Fabrication of girder splices is covered by WSDOT *Standard Specifications* 6-03.3(27) and 6-03.3(28). Method of field assembly is covered by section 6-03.3(32) and bolting inspection and installation by section 6-03.3(33). Since bolted joints have some play due to differences in bolt diameter and hole size, field splices are drilled while segments are set in proper alignment in the shop. The joint is pinned (pin diameter equals hole size to prohibit movement) for shop assembly and also during initial field fit-up. Normally, this ensures repeatability of joint alignment from shop to field.

6.3.11 Camber

Camber includes effects of profile grade, superelevation, anticipated dead load deflections, and slab shrinkage (if measurable). Permanent girder deflections shall be shown in the contract plans in the form of camber diagrams and tables. Dead load deflections are due to steel self-weight, bridge deck dead load, and superimposed dead loads such as overlay, sidewalks, and barriers. Since fabricated camber and girder erection have inherent variability, bridge deck form height is adjusted after steel has been set. Although a constant distance from top of web to top of deck is assumed, this will vary along the girders. Bridge deck forms without adjustment for height are not allowed. Girders must be profiled once fully erected, and before bridge deck forms are installed. See *Standard Specification* 6-03.3(39).

Girder camber is established at three stages of construction. First, girder webs are cut from plates so that the completed girder segment will assume the shape of reverse dead load deflections superimposed on profile grade. Only minor heat corrections may be made in the shop to meet the camber tolerance of the Bridge Welding Code AWS D1.5 Chapter 3.5. Camber for plate girders is not induced by mechanical force. The fabricated girder segment will incorporate the as-cut web shape and minor amounts of welding distortion. Next, the girder segments are brought together for shop assembly. Field splices are drilled as the segments are placed in position to fit profile grade plus total dead load deflection (no load condition). Finally, the segments are erected, sometimes with supports at field splices. There may be slight angle changes at field splices, resulting in altered girder profiles. Errors at mid-span can be between one to two inches at this stage.

The following is a general outline for calculating camber and is based on girders having shear studs the full length of the bridge.

Two camber curves are required, one for total dead load plus bridge deck formwork and one for steel framing self-weight. The difference between these curves is used to set bridge deck forms.

Girder dead load deflection is determined by using various computer programs. Many steel girder design programs incorporate camber calculation. Girder self-weight is assumed to include the basic section plus stiffeners, crossframes, welds, shear studs, etc. These items may be accounted for by adding an appropriate percentage of basic section weight (15% is a good rule of thumb). Total dead load camber shall consist of deflection due to:

A. Steel weight, applied to steel section. Include 10 psf bridge deck formwork allowance in the total dead load camber, but not in the steel weight camber. The effect of removing formwork is small in relation to first placement, due to composite action between girders and bridge deck. It isn't necessary to account for the removal.

B. Bridge deck weight, applied to steel section. This should be the majority of dead load deflection.

C. Traffic barriers, sidewalks, and overlays, applied to long-term composite section using 3n. Do not include weight of future overlays in the camber calculations.

D. Bridge deck shrinkage (if ≥ ¾″).

Bridge deck dead load deflection will require the designer to exercise some judgment concerning degree of analysis. A two or three span bridge of regular proportions, for example, should not require a rigorous analysis. The bridge deck may be assumed to placed instantaneously on the steel section only. Generally, due to creep, deflections and stresses slowly assume a state consistent with instantaneous bridge deck placement. For unusual girder arrangements, and especially structures with in-span hinges, an analysis coupled with a bridge deck placement sequence may be justified. This would require an incremental analysis where previous bridge deck placement are treated as composite sections (using a modulus of elasticity for concrete based on age at time of second pour) and successive bridge deck placements are added on noncomposite sections. Each bridge deck placement requires a separate deflection analysis. The total effect of bridge deck construction is the superposition of each bridge deck placement.

Traffic barriers, sidewalks, overlays, and other items constructed after the bridge deck placement should be analyzed as if applied to the long-term composite section full length of the bridge. The modulus of elasticity of the slab concrete shall be reduced to one third of its short term value. For example, if f'c = 4000 psi, then use a value of n = 24.

Bridge deck shrinkage has a varying degree of effect on superstructure deflections. The designer shall use some judgment in evaluating this effect on camber. Bridge deck shrinkage should be the smallest portion of the total camber. It has greater influence on shallower girder sections, say rolled beams. Simple spans will see more effect than continuous spans. For medium to long span continuous girders (spans over 200 feet without any in-span hinges), bridge deck shrinkage deflection can be ignored. For simple span girders between 150 and 250 feet, the deflection should not exceed 1″. For calculation, apply a shrinkage strain of about 0.0002 to the long-term composite section using 3n.

In addition to girder deflections, show girder rotations at bearing stiffeners. This will allow shop plan detailers to compensate for rotations so that bearing stiffeners will be vertical in their final position.

Camber tolerance is governed by the Bridge Welding Code AWS D1.5, chapter 3.5. A note of clarification is added to the plan camber diagram: "For the purpose of measuring camber tolerance during shop assembly, assume top flanges are embedded in concrete without a designed haunch." This allows a high or low deviation from the theoretical curve, otherwise no negative camber tolerance is allowed.

A screed adjustment diagram shall be included with the camber diagram. This diagram, with dimension table, shall be the remaining calculated deflection just prior to bridge deck placement, taking into account the estimated weight of deck formwork and deck reinforcing. The weight of bridge deck formwork may be taken equal to 10 psf, or the assumed formwork weight used to calculate total camber. The weight of reinforcing may be taken as the span average distributed uniformly. The screed adjustment should equal: (Total Camber – Steel Camber) - (deflection due to forms + rebar). The screed adjustment shall be shown at each girder line. This will show the contractor how much twisting is anticipated during deck placement, primarily due to span curvature and/or skew. These adjustments will be applied to theoretical profile grades, regardless of actual steel framing elevations. The adjustments shall be designated "C". The diagram shall be designated as "Screed Setting Adjustment Diagram." The table of dimensions should be kept separate from the girder camber, but at consistent locations along girders. That is, at $1/10^{th}$ points or panel points. A cross section view should be included with curved span bridges, showing effects of twisting. See Appendix 6.4-A6.

For the purpose of setting bridge deck soffit elevations, a correction shall be made to the plan haunch dimension based on the difference between theoretical flange locations and actual profiled elevations. The presence of bridge deck formwork must be noted at the time of the survey. The presence of false decking need not be accounted for in design or the survey.

6.3.12 Roadway Slab Placement Sequence

The roadway slab is placed in a prescribed sequence allowing the concrete in each segment to shrink with minor influence on other segments. Negative moment regions (segments over interior piers) must be placed after positive moment regions have had time to cure. This helps minimize shrinkage cracking and provides manageable volumes of concrete for a work shift.

Positive moment regions should be placed first, while negative moment regions are placed last. Successive segments should not be placed until previous segments attain strengths of about 2000 psi or cure 3 to 7 days. This general guideline is sufficient for typical, well balanced span arrangements. For unbalanced span arrangements, the designer should check slab tensile stresses imposed on adjoining span segments. Required concrete strength can be increased, but needless delays waiting for higher strengths should be avoided. Also, the contractor should be given the option of placing positive moment segments with little influence on each other at a convenient rate, regardless of curing time. That is, segments separated by a span could be placed the same or next day without any harm. These can be lumped in the same pour sequence.

6.3.13 Bridge Bearings for Steel Girders

Make bearing selection consistent with required motions and capacities in the following order of preference, high to low:

- No bearings (integral abutments or piers)
- Elastomeric bearings
- Fabric pad bearings
- Steel cylindrical (pin) bearings
- Disk bearings
- Spherical bearings

6.3.14 Surface Roughness and Hardness

The standard measure of surface roughness is the microinch value. Surface roughness shall be shown on the plans for all surfaces for which machining is required unless covered by the *Standard Specifications* or Special Provisions. Consult *Machinery's Handbook* for common machining practice. Edge finishing for steel girders is covered in *Standard Specification* 6-03.3(14). Surface hardness of thermal cut girder flanges is also controlled.

Following is a brief description of some finishes:

1000 A surface produced by thermal cutting

500 A rough surface finish typical of "as rolled" sections. Suitable for surfaces that do not contact other parts and for bearing plates on grout.

250 A fairly smooth surface. Suitable for connections and surfaces not in moving contact with other surfaces. This finish is typical of ground edges in tension zones of flanges.

125 A fine machine finish resulting from careful machine work using high speeds and taking light cuts. It may be produced by all methods of direct machining under proper conditions. Suitable for steel to steel bearing or rotational surfaces including rockers and pins.

63 A smooth machine finish suitable for high stress steel to steel bearing surfaces including roller bearings on bed plates.

32 An extremely fine machine finish suitable for steel sliding parts. This surface is generally produced by grinding.

16 A very smooth, very fine surface only used on high stress sliding bearings. This surface is generally produced by polishing.

For examples, see Figure 6.3.14-1.

For stainless steel sliding surfaces, specify a #8 mirror finish. This is a different method of measurement and reflects industry standards for polishing. No units are implied.

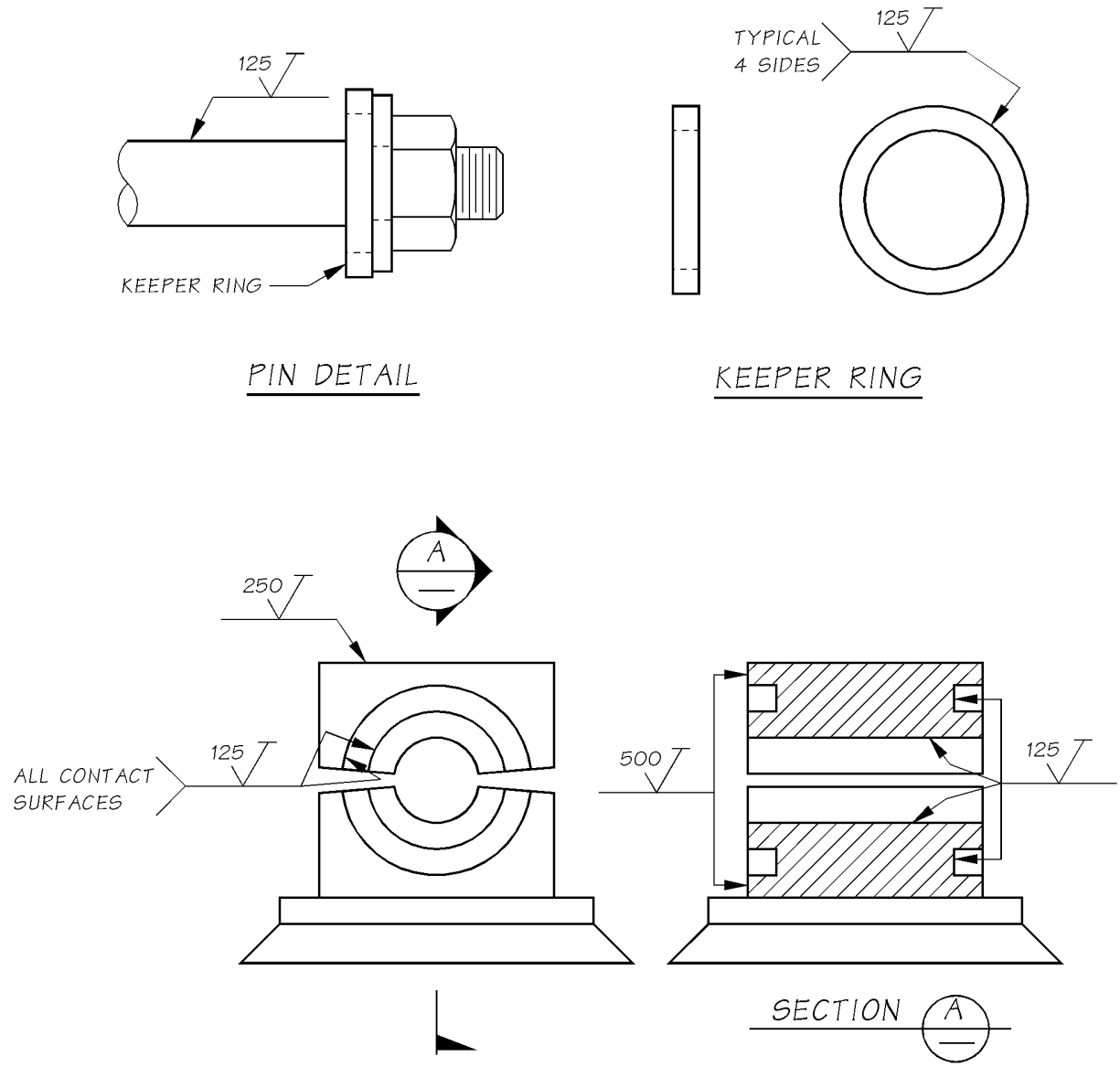

Surface Finish Examples
Figure 6.3.14-1

6.3.15 Welding

All structural steel and rebar welding shall be in accordance with the *Standard Specifications*, amendments thereto and the special provisions. The *Standard Specifications* currently calls for welding structural steel according to the AASHTO/AWS D1.5-2002 *Bridge Welding Code* (BWC) and the latest edition of the AWS D1.1 *Structural Weld Code*. The designers should be especially aware of current amendments to the following sections of the *Standard Specifications*, 6-03.3(25) Welding and Repair Welding and 6-03.3(25)A Welding Inspection.

Exceptions to both codes and additional requirements are shown in the *Standard Specifications* and the special provisions.

Standard symbols for welding, brazing, and nondestructive examination can be found in the ANSI/AWS A 2.4 by that name. This publication is a very good reference for definitions of abbreviations and acronyms related to welding.

The designer must consider the limits of allowable fatigue stress, specified for the various welds used to connect the main load carrying members of a steel structure. See AASHTO LRFD article 6.6. Most plate girder framing can be detailed in a way that provides fatigue category C or better.

The minimum fillet weld size shall be as shown in the following table. Weld size is determined by the thicker of the two parts joined unless a larger size is required by calculated stress. The weld size need not exceed the thickness of the thinner part joined.

Base Metal Thickness of Thicker Part Joined	Minimum Size of Fillet Weld
To ¾″ inclusive	¼″
Over ¾″	5⁄16″

In general, the maximum size fillet weld which may be made with a single pass is 5⁄16 inch for submerged arc (SAW), gas metal arc (GMAW), and flux-cored arc welding (FCAW) processes. The maximum size fillet weld made in a single pass is ¼ inch for the shielded metal arc welding (SMAW) process.

The major difference between AWS D1.1 and D1.5 is the welding process qualification. The only process deemed prequalified in D1.5 is shielded metal arc (SMAW). All others must be qualified by test. Qualification of AASHTO M 270 grade 50W (ASTM A709 grade 50W) in Section 5 of D1.5 qualifies the welding of all AASHTO approved steels with a minimum specified yield of 50 ksi or less. Bridge fabricators generally qualify to M 270 grade 50W (A709 grade 50W).

All bridge welding procedure specifications (WPS) submitted for approval shall be accompanied by a procedure qualification record (PQR), a record of test specimens examination and approval except for SMAW prequalified. Some handy reference aids in checking WPS in addition to PQR are:

Matching filler metal requirements are found in BWC Section 4.

Prequalified joints are found in BWC Section 2.

AWS electrode specifications and classifications are obtained from the structural steel specialist. Many electrode specification sheets may be found online.

Lincoln Electric Arc Welding Handbook.

Many of Lincoln Electric's published materials and literature are available through those designers and supervisors who have attended Lincoln Electric's weld design seminars.

WSDOT *Standard Specifications* for preheat and interpass temperatures.

Notes: Electrogas and electroslag welding processes are not allowed in WSDOT work. Narrow gap improved electroslag welding will be allowed on a case-by-case basis.

Often in the rehabilitation of existing steel structures, it is desirable to weld, in some form, to the in-place structural steel. Often it is not possible to determine from the original contract documents whether or not the existing steel contains high or low carbon content and carbon equivalence. Small coupons from the steel can be taken for a chemical analysis. Labs are available in the Seattle and Portland areas that will do this service quickly. Suitable weld procedures can be prepared once the chemical content is measured.

6.3.16 Shop Assembly

In most cases, a simple progressive longitudinal shop assembly is sufficient to ensure proper fit of subsections, field splices, and crossframe connections, etc., in the field. Due to geometric complexity of some structures, progressive transverse assembly, in combination with progressive longitudinal assembly may be desirable. The designer shall consult with the supervisor and the steel specialist to determine the extent of shop assembly and clarification of *Standard Specifications* Section 6-03.3(28)A. If other than line girder progressive assembly is required, the method must be included by special provision. High skews or curved girders should be done with some form of transverse and longitudinal assembly. Complex curved and skewed box girder framing should be done with full transverse progressive assembly. For transverse assembly, specify crossframe and pier diaphragm connections to be completed while assembled.

During shop assembly, girder segments are blocked or supported in the no-load condition (no gravity effects). Simple line girder assembly is often done in the horizontal position. The primary reason for shop assembly is to ensure correct alignment for girder field splices. For straight bridges, crossframe connections are normally done by numerically controlled (NC) drilling (no trial shop assembly). This is generally of sufficient accuracy to allow crossframe installation in the field without corrective action such as reaming.

For curved I-girders, crossframes are to be fabricated to fit the no-load condition. During field erection, girder segments will need to be adjusted or supported to make fit-up possible. This is not unreasonable since curved girders are not self-supporting before crossframes are in place. However, the method results in out-of-plumb girders. For most cases, making theoretical compensation to arrive at plumb in final condition is not justified.

Highly skewed girders present difficult fit-up conditions. Setting screeds is also complicated because of differential deflections between neighboring girders. Design of crossframes and pier diaphragms must take into account twist and rotations of webs during construction. Often, slotted holes for crossframe connections can be used to allow settlement without undue web distortion. This situation should be carefully studied by grid or finite element analysis to determine amount and type of movement anticipated during construction. Details should be consistent. Unlike curved girders rotating away from plumb at midspan, girder webs for skewed construction should be kept plumb at piers.

6.4 Plan Details

6.4.1 General

Detailing practice should follow industry standards. Designations for structural steel can be found in Table 2-1 of AISC *Detailing for Steel Construction*. Previous plans are a good reference for detailing practices. Detailing should also conform to national unified guidelines published by AASHTO/NSBA Steel Bridge Collaboration.

Details for plate girders are continually being revised or improved to keep up with changing fabrication practice, labor and material costs, and understanding of fatigue behavior. Uses and demands for steel girder bridges are also changing. Cost benefits for individual details vary from shop to shop and even from time to time. For these reasons, previous plan details can be guides but should not be considered standards. Options should be made available to accommodate all prospective fabricators. For example, small shops prefer shorter, lighter girder segments. Some shops are able to purchase and handle plates over 90 feet long. Large shop assembly may be prohibitive for fabricators without adequate space.

In general, office practice is to favor field bolted as opposed to field welded connections. In addition, members of cross frames are shop bolted to give some degree of field adjustment. Welded assemblies have little adjustment during erection.

6.4.2 Structural Steel Notes

Due to their dynamic nature, the structural steel notes are not shown in this manual. They are available as standards in the drafting system. Since each project has unique requirements, these notes should be edited accordingly. Material specifications are constantly changing. Separate sets of notes are available for I and box girders.

6.4.3 Framing Plan

The Framing Plan gives plan locations of girders, crossframes, and attachments. Show ties between the survey line, girder lines, backs of pavement seats, and centerlines of piers. Locate panel points (crossframe locations). Show general arrangement of bottom laterals. Provide geometry, bearing lines, and transverse intermediate stiffener locations. Show field splice locations. Map out different lateral connection details. See Appendix 6.4-A1.

6.4.4 Girder Elevation

The Girder Elevation is used to define flanges, webs, and their splice locations. Show shear connector spacing, location, and number across the flange. Locate transverse stiffeners and show where they are cut short of tension flanges. Show the tension regions of the girders for the purpose of ordering plate material, inspection methods (NDE), and *Bridge Welding Code* acceptance criteria. See Charpy V-notch testing requirements of the *Standard Specifications*. Identify tension welded butt splices for which radiographic examination (RT) is required. See *Standard Specifications 6-03.3(25)A*. V and X are also defined in the Structural Steel Notes. Permissible welded web splices should be shown, however, the optional welded web splice shown on the Girder Details sheet permits the fabricator to add splices subject to approval by the engineer. If there are fracture critical components, they must be clearly identified along with CVN call-outs. See Appendix 6.4-A2.

6.4.5 Typical Girder Details

One or two plan sheets should be devoted to showing typical details to be used throughout the girders. Such details include the weld details, various stiffener plates and weld connections, locations of optional web splices, and drip plate details. Include field splice details here if only one type of splice will suffice for the plans. An entire sheet may be required for bridges with multiple field splice designs. See Appendix 6.4-A3 and 6.4-A4. Note: Do not distinguish between field bolts and shop bolts. A solid bolt symbol will suffice.

Field splices for flanges should accommodate web location tolerance of ± ¼″ per BWC 3.5.1.5. Allow a minimum of ¼″ for out of position web plus ⅜″ for fillet weld, or a total of ⅝″ minimum clear between theoretical face of web and edge of splice plate. The bottom flange splice plate should be split to allow moisture to drain (use 4 equal bottom flange splice plates). The fill plate does not need to be split.

Vertical stiffeners used to connect crossframes are generally 8″ wide to accommodate two bolt rows. They must be welded to top and bottom flanges to reduce out-of-plane bending of the web. Stiffeners are coped, clipped or cut short a distance between $4t_w$ and $6t_w$ to provide web flexibility, per AASHTO LRFD article 6.10.11.1.1.

6.4.6 Crossframe Details

Show member sizes, geometrics (work lines and work points), and connection details. Actual lengths of members and dimensions of connections will be determined by the shop plan detailer. Details should incorporate actual conditions such as skew and neighboring members so that geometric conflicts can be avoided. Tee sections are preferred over double angles for easier painting. If double angles are used, leave a minimum of 1 inch between legs and include fillers as needed for stability. Do not detail crossframes that require piecemeal installation. They must be complete subassemblies for field installation. For highly loaded crossframes, such as at piers or between curved girders, consider symmetric sections with little or no eccentricity in the connections. Where possible, allow for repetitive use of crossframe geometrics, especially hole patterns in stiffener connections, regardless of superelevation transitions. See Appendix 6.4-A5.

Internal crossframes and top lateral systems for box girders are shop welded, primarily. All connection types should be closely examined for detail conflict and weld access. Clearance between deck forming and top lateral members must be considered.

6.4.7 Camber Diagram and Bearing Stiffener Rotation

Camber curves should be detailed using conventional practices. Dimensions should be given at tenth points. Dimensions may also be given at crossframe locations, which may be more useful in the field. In order to place bearing stiffeners in the vertical position after bridge deck placement, it is necessary to show expected girder rotations at piers. See Appendix 6.4-A6.

Office practice is to show deflection camber only. Geometric camber for profile grade and superelevation will be calculated by the shop detailer from highway alignment shown on the Layout sheets.

A separate diagram and table, with bridge cross section, should be included to show how elevations at edges of deck can be determined just before concrete placement. This will give adjustments to add to profile grades, based on remaining dead load deflections, with deck formwork and reinforcing being present.

The camber diagram is intended to be used by the bridge fabricator. The screed setting adjustment diagram is intended to be used by the contractor and inspectors.

6.4.8 Bridge Deck

New bridge decks for steel stringers shall use Deck Protection System 1.

The bridge deck slab is detailed in section and plan views. For continuous spans, add a section showing negative moment longitudinal reinforcing. If possible, continue the positive moment region reinforcing pattern from end-to-end of the bridge deck with the negative moment region reinforcing superimposed on it. The plan views should detail typical reinforcing and cutoff locations for negative moment steel. Avoid termination of all negative moment steel at one location. See Appendix 6.4-A7 and 6.4-A8.

The "pad" dimension for steel girders is treated somewhat differently than for prestressed girders. The pad dimension is assumed to be constant throughout the span length. Ideally, the girder is cambered to compensate for dead loads and vertical curves. However, fabrication and erection tolerances result in considerable deviation from theoretical elevations. The pad dimension is therefore considered only a nominal value and is adjusted as needed along the span once the steel has been erected and profiled. The screed for the slab is to be set to produce correct roadway profile. The plans should reference this procedure contained in *Standard Specification* Section 6-03.3(39). The pad dimension is to be noted as nominal. As a general rule of thumb, use 11″ for short span bridges (spans less than 150′), 12″ for short to medium span bridges (150′ to 180′), 13″ for medium spans (180′ to 220′) and 14″ to 15″ for long spans (over 220′). These figures are only approximate. Use good engineering judgment when detailing this dimension.

6.4.9 Handrail Details, Inspection Lighting, and Access

If required, include handrails with typical girder details. Locations may be adjusted to avoid conflicts with other details such as large gusset plates. Handrail use shall be coordinated with the Bridge Preservation Office. Often, handrails are not needed if access to all details is possible from under bridge inspection trucks (UBIT's). Also, easy public access to girder ends and handrails may represent a nuisance. Examine the bridge and site to determine the need for handrails. Fences may be required to deny public access.

Box girders require special consideration for inspection access. Access holes or hatches shall be detailed to exclude birds and the public. They shall be positioned where ladders, as a minimum, are required to gain access. If possible locate hatches in girder webs at abutments. Hatches through webs may reduce shear capacity but are easier to use. Webs can be thickened to compensate for section loss. Provide for round trip access and penetrations at all intermediate diaphragms. Openings through girder ends are preferred if space behind end walls permits. Bottom flange hatches are difficult to operate. Pier diaphragms will require openings for easy passage. Access for removing deck formwork shall be planned for. Typically, block-outs in the deck large enough to remove full size plywood are detailed. Block-outs require careful rebar splicing or coupling for good long term performance. Box girders shall have electrical, inspection lighting, and ventilation details for the aid of inspection and maintenance. Refer to the WSDOT Design Manual chapter 1040 for bridge inspection lighting requirements. Coordinate with the Region Design Office to include lighting with the electrical plans.

To facilitate inspection, interior paint should be light color; Federal Standard 595 color number 17925 (white) is preferred. One-way inspection of all interior spaces should be made possible by round trip in adjoining girders. This requires some form of walkway between boxes and hatch operation from both sides. If locks are needed, they must be keyed to one master. Air vents shall be placed along girder webs to allow fresh air to circulate. Refer to previous projects for details.

6.4.10 Box Girder Details

A few details unique to box girders will be presented here. Office practice has been to include a top lateral system in each box, full length of a girder. There is a possibility of reducing some bays of the top laterals in straight girders without sacrificing safety during construction. However, most WSDOT box girders are built to some level of curvature, and the practice of using a full length top lateral system should be adhered to unless a careful stability analysis is undertaken. In the past, the top lateral system was detailed with 6″ to 8″ clearance between lateral work line and bottom of top flange. The intent was to provide adequate clearance for removable deck forming. This requires the introduction of gusset connecting plates with potentially poor fatigue behavior if welded to the web.

A cleaner method of attaching the top laterals is by bolting directly to the top flange or intermediate bolted gusset plate (in which case, the lateral members may be welded to the gusset plate). The flange bolting pattern should be detailed to minimize loss of critical material, especially at interior supports. In order to maximize the clearance for deck forms, all lateral connections should progress down from the bottom surface of the top flange. The haunch distance between top of web and deck soffit should be 6″ or greater to allow deck forming to clear top lateral members. Supplemental blocking will be required to support deck forms on the typical waler system. See example top lateral details Appendix 6.4-A11.

Ideal girder construction allows full length web and flange plates to be continuously welded without interruption of the welder. This process is routinely accomplished with I-girder shapes, where web stiffeners are attached after top and bottom flanges are welded to the web. With box girders, however, due to handling constraints, most fabrication shops need to progress from top flange-to-web welding, welding stiffeners to webs, and then welding the top flange plus web assemblies to the bottom flange. This introduces a start and stop position at each web stiffener, unless enough clearance is provided the welder. To achieve this, the stiffener should be held back and attached to the bottom flange by a member brought in after the bottom longitudinal welds are complete. See detail Appendix 6.4-A11.

Small tractor mounted welders are able to run a continuous pass on the bottom external weld, provided there is adequate shelf width. The standard offset between center of web and edge of bottom flange is now 2″. In the past, this weld was primarily performed by hand.

The most significant design difference between I-girders and box girders occur in bottom flange compression regions. Using thicker material to provide stability is not usually economical, given the typically wide unsupported flange widths. The standard practice has been to stiffen relatively thin compression plates with a system of longitudinal and transverse stiffeners. WSDOT practice is to use tee shapes, either singly or in pairs for the wider plates. Ideally, the stiffeners are terminated at bolted field splices. If the stiffener is terminated in a region of live load tension cycles, careful attention needs to be paid to design fatigue stresses and the termination detail. See details Appendix 6.4-A13.

Box girder inside clear height shall be 5 feet or more to provide reasonable inspection access. Less than 5 feet inside clear height is not be permitted. Other girder types and materials shall be investigated.

Drain holes shall be installed at all low points.

Geometrics for boxes are referenced to a single workline, unless box width tapers. The box cross section remains tied to a centerline intersecting this workline and normal to the bridge deck. The section rotates with superelevation transition rather than warping. See box girder geometrics and proportions Appendix 6.4-A10.

Box girders shall be supported by single centralized bearings when two or more boxes make up the bridge section. This requires diaphragms between boxes for bracing. See pier diaphragm details Appendix 6.4-A12.

6.5 Shop Plan Review

Shop plans shall be checked for agreement with the Contract Plans, *Standard Specifications*, and the Special Provisions. The review procedure is described in Section 1.3.5 of this manual. Material specifications shall be checked along with plate sizes.

Welding procedure specifications (WPS) and procedure qualification records (PQR) shall be submitted with shop plans. If not, they shall be requested and received before shop plans are approved.

Most shop plans may be stamped:

> "GEOMETRY NOT REVIEWED BY THE BRIDGE AND STRUCTURES OFFICE"

However, the reviewer should verify that lengths, radii, and sizes shown on shop plans are in general agreement with the contract. The effects of profile grade and camber would make exact verification difficult. Some differences in lengths, between top and bottom flange plates for example, are to be expected.

The procedures to follow in the event changes are required or requested by the fabricator can be found in Section 1.3.6 of this manual. In the past, shop plans with acceptable changes have been so noted and stamped:

> "STRUCTURALLY ACCEPTABLE, BUT DOES NOT CONFORM TO THE CONTRACT REQUIREMENTS"

6.99 References

The following publications can provide general guidance for the design of steel structures. Some of this material may be dated and its application should be used with caution.

1. *Highway Structures Design Handbook, Volumes I and II* by AISC Marketing, Inc., formerly by US Steel

   This is a detailed design reference for "I" girders and box girders, both straight and curved, utilizing either service load design or load factor design. This reference has good background on steel bridge details, and how to use them. Although calculations have not been updated for LRFD, the general theory is still valuable. Many shortcuts for design or modeling are presented, such as converting lateral systems into idealized thin plates, and the V load method to approximate curved I girder behavior.

2. *Composite Steel Plate Girder Superstructures,* by US Steel

   Example tables and charts for complete plate girders, standardized for 34 and 44 ft. roadways and HS-20 loading. Many span arrangements and lengths are presented.

3. *Four LRFD Design Examples of Steel Highway Bridges, Vol. II, Chapter 1B Highway Structures Design Handbook,* by AISI and NSBA

4. *Steel Structures, Design and Behavior* by Salmon and Johnson

   A textbook for steel design, formatted to AISC LRFD method. This is a good reference for structural behavior of steel members or components, in detail that is not practical for codes or other manuals.

5. *Design of Welded Structures* by Omer H. Blodgett.

   This publication is quite helpful in the calculation of section properties and the design of individual members. There are sections on bridge girders and many other welded structures. The basics of torsion analysis are included.

6. *Guide to Stability Design Criteria for Metal Structures,* by Theodore V. Galambos

7. *Curved Girder Workshop* produced by the Federal Highway Administration.

   This publication is helpful in the design of curved "I" girders and box girders with explanation of the associated lateral flange bending, torsional, and warping stresses. Approximate analysis techniques are provided.

8. *A Fatigue Primer for Structural Engineers*, by John Fisher, Geoffrey L Kulak, and Ian F. C. Smith

9. *Steel Construction Manual, Thirteenth Edition,* by American Institute of Steel Construction

   The essential reference for rolled shape properties, design tables, and specifications governing steel design and construction.

10. *Machinery's Handbook,* by Industrial Press

    A reference book for the machine shop practice; handy for thread types, machine tolerances and fits, spring design, etc.

11. *Painting of Steel Bridges and Other Structures*, by Clive H. Hare

    This is a good reference for paint systems, surface preparation, and relative costs, for both bare and previously painted steel. Explanations of how each paint system works, and comparisons of each on the basis of performance and cost are provided.

12. NCHRP Report 314, *Guidelines for the Use of Weathering Steel in Bridges*

    This reference contains detailing information if weathering steel will be used. Protection of concrete surfaces from staining and techniques for providing uniform appearance is provided.

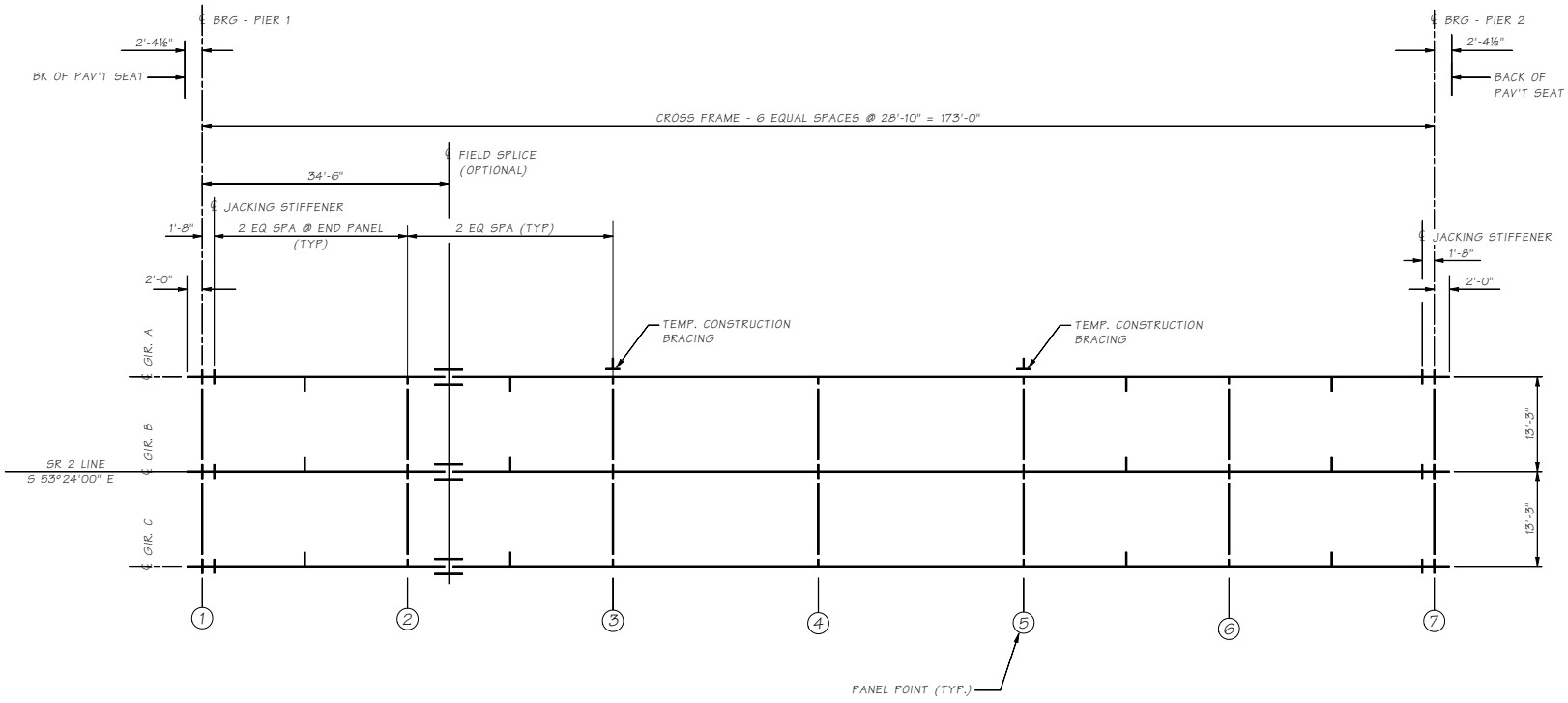

FRAMING PLAN

Bridge Design Engr.	M:\BRIDGELIB\BDM\Chapter 6\window files\S64-A1.wnd				REGION NO.	STATE	FED. AID PROJ. NO.	SHEET NO.	TOTAL SHEETS	BRIDGE AND STRUCTURES OFFICE
Supervisor					10	WASH.				Washington State Department of Transportation
Designed By					JOB NUMBER					FRAMING PLAN
Checked By										BRIDGE SHEET NO.
Detailed By										SHEET OF SHEETS
Bridge Projects Engr.										
Prelim. Plan By										
Architect/Specialist	DATE	REVISION	BY	APPD						

SR JOB NO. SHEET

6.4-A1

Fri Sep 03 13:26:52 2010

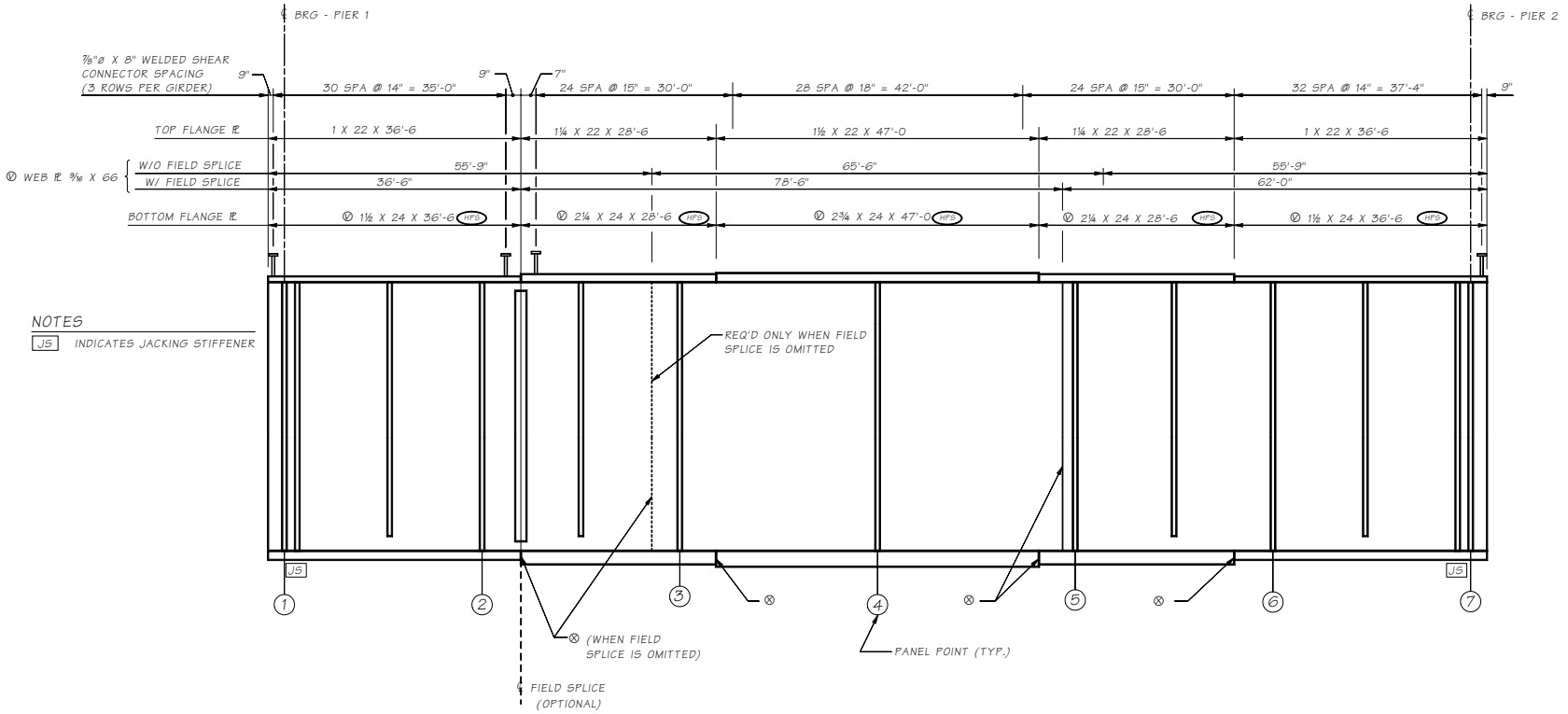

GIRDER ELEVATION

Bridge Design Engr.	M:\BRIDGELIB\BDM\Chapter 6\window files\S64-A2.wnd				REGION NO.	STATE	FED. AID PROJ. NO.	SHEET NO.	TOTAL SHEETS	BRIDGE AND STRUCTURES OFFICE
Supervisor					10	WASH.				Washington State Department of Transportation
Designed By					JOB NUMBER					GIRDER ELEVATION
Checked By										BRIDGE SHEET NO.
Detailed By										SHEET OF SHEETS
Bridge Projects Engr.										
Prelim. Plan By										
Architect/Specialist	DATE	REVISION	BY	APPD						

Fri Sep 03 13:26:54 2010

SHEET
JOB NO.
SR

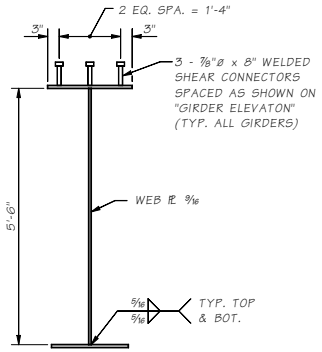

TYPICAL GIRDER SECTION

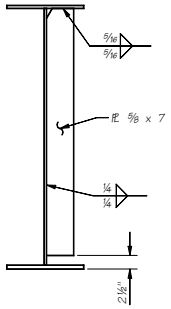

TYPICAL STIFFENER BETWEEN X-FRAMES

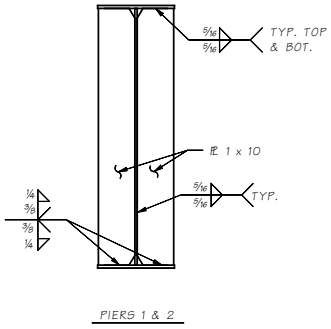

PIERS 1 & 2

BEARING AND JACKING STIFFENERS

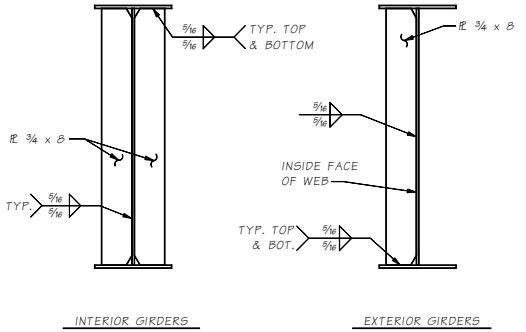

INTERIOR GIRDERS

EXTERIOR GIRDERS

TYPICAL STIFFENER AT INTERMEDIATE X-FRAME

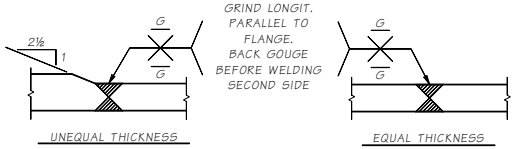

TENSION OR COMPRESSION FLANGE SPLICE

WELDED GIRDER SPLICE DETAILS

FABRICATOR MAY SUBSTITUTE B-L2C-S FOR B-U3C-S, SUBJECT TO THICKNESS LIMITATIONS.

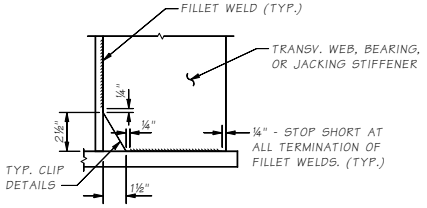

TYPICAL FILLET WELD TERMINATION DETAIL

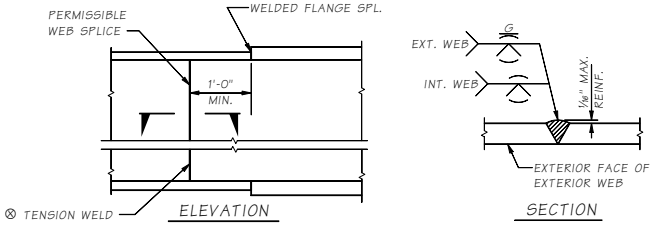

PERMISSIBLE WEB SPLICE

Bridge Design Engr.	M:\BRIDGELIB\BDM\Chapter 6\window files\S64-A3.wnd				REGION NO.	STATE	FED. AID PROJ. NO.	SHEET NO.	TOTAL SHEETS
Supervisor					10	WASH.			
Designed By					JOB NUMBER				
Checked By									
Detailed By									
Bridge Projects Engr.									
Prelim. Plan By									
Architect/Specialist	DATE	REVISION	BY	APPD					

BRIDGE AND STRUCTURES OFFICE

Washington State Department of Transportation

GIRDER DETAILS

BRIDGE SHEET NO.

SHEET OF SHEETS

SR JOB NO. SHEET

6.4-A3

Fri Sep 03 13:26:55 2010

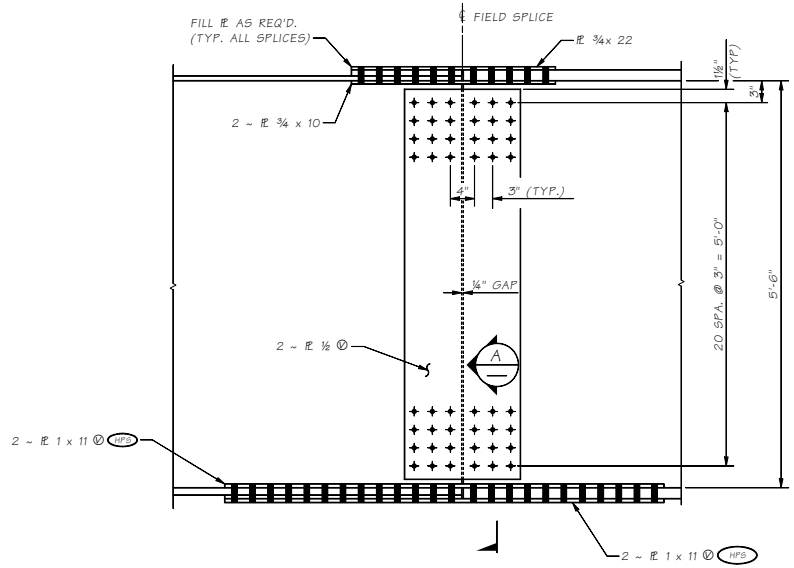

ELEVATION

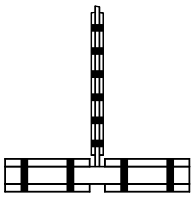

SECTION A

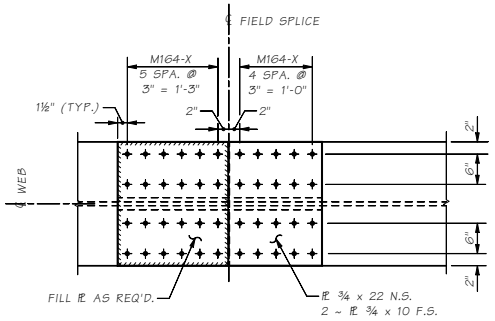

PLAN
TOP FLANGE

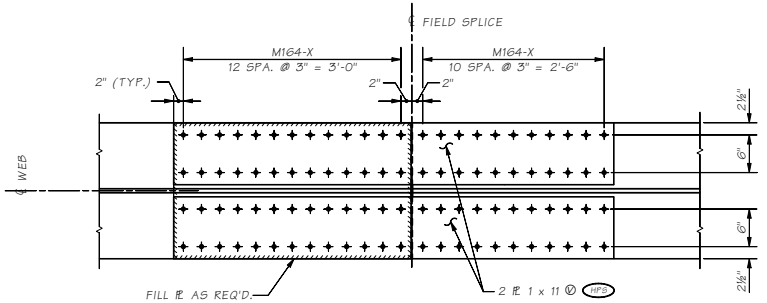

PLAN
BOTTOM FLANGE

NOTE:
X DESIGNATES BOLTS TO BE DETAILED SO THAT THREADS ARE EXCLUDED FROM ALL SHEAR PLANES.

Bridge Design Engr.	M:\BRIDGELIB\BDM\Chapter 6\window files\S64-A4.wnd				BRIDGE NO.	STATE	FED. AID PROJ. NO.	SHEET NO.	TOTAL SHEETS
Supervisor					10	WASH.			
Designed By					JOB NUMBER				
Checked By									
Detailed By									
Bridge Projects Engr.									
Prelim. Plan By									
Architect/Specialist	DATE	REVISION	BY	APPD					

BRIDGE AND STRUCTURES OFFICE

Washington State Department of Transportation

STEEL PLATE GIRDER FIELD SPLICE

BRIDGE SHEET NO.
SHEET
OF
SHEETS

SHEET
JOB NO.
SR

6.4-A4

Fri Sep 03 13:26:57 2010

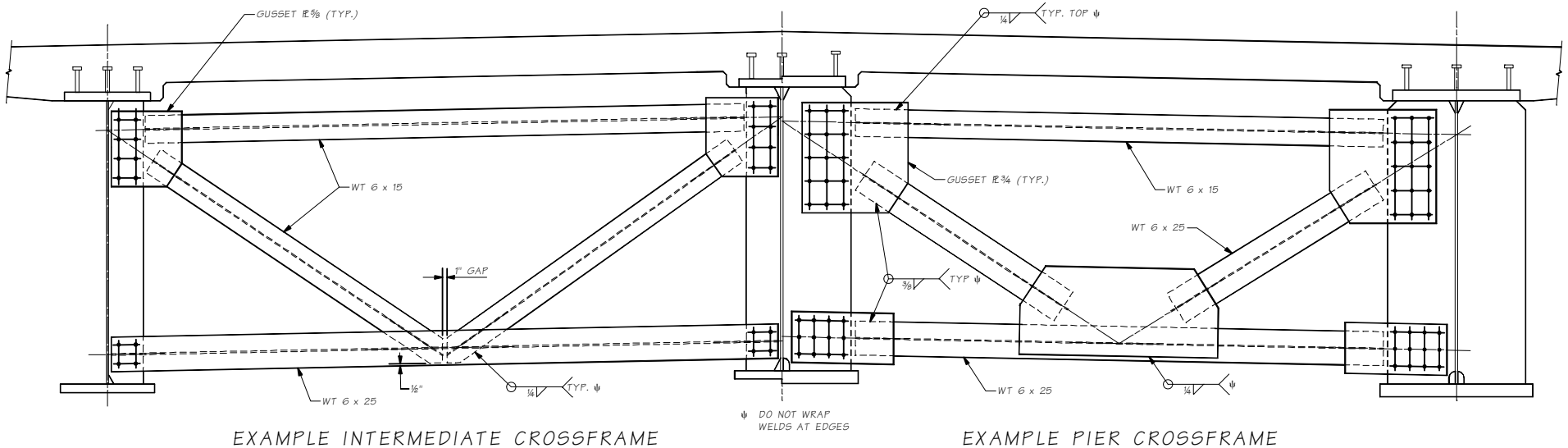

EXAMPLE INTERMEDIATE CROSSFRAME

NOTES FOR INTERMEDIATE CROSSFRAMES:

1. EXAMPLE SHOWN IS REPRESENTATIVE OF A MODERATE SPAN BRIDGE WITHOUT SIGNIFICANT CURVATURE OR SKEW.
2. WHERE CURVATURE IS PRESENT, THE CROSSFRAMES SHALL BE CONSIDERED MAIN LOAD CARRYING MEMBERS, DESIGNED FOR ALL DEAD AND LIVE LOADS. MARK ALL COMPONENTS Ⓜ. FILLET WELDED CONNECTIONS MUST BE CHECKED FOR FATIGUE CATEGORY E OR E', PER LRFD TABLE 6.6.1.2.3-1 FIG. 7.1. ALTERNATIVELY, DESIGN SHOP CONNECTIONS AS BOLTED.

EXAMPLE PIER CROSSFRAME

NOTES FOR PIER CROSSFRAMES:

1. EXAMPLE SHOWN IS REPRESENTATIVE OF A MODERATE SPAN BRIDGE WITHOUT SIGNIFICANT CURVATURE OR SKEW.
2. DESIGN MEMBERS AND CONNECTIONS FOR SEISMIC DEMAND. TYPICAL INTERIOR PIER CROSSFRAMES ARE CAPACITY PROTECTED COMPONENTS. VERIFY STRENGTH LOAD CASES ARE SATISFIED.
3. VERIFY STRENGTHS OF UPPER AND LOWER STIFFENER WELDS ARE SUFFICIENT FOR SEISMIC LOAD PATH, IN ADDITION TO STRENGTH LOAD CASES.
4. RESISTANCE FACTOR FOR BOLTS, EXTREME LIMIT STATE = 0.80 PER LRFD 6.5.5. ALL OTHER COMPONENTS = 1.0
5. WHERE FATIGUE STRESS RANGE IS A CONCERN, CHECK WELD DETAILS OR USE BOLTED SHOP CONNECTIONS.

Bridge Design Engr.					REGION NO.	STATE	FED. AID PROJ. NO.	SHEET NO.	TOTAL SHEETS	BRIDGE AND STRUCTURES OFFICE
Supervisor					10	WASH.				Washington State Department of Transportation
Designed By					JOB NUMBER					EXAMPLE CROSSFRAME DETAILS
Checked By										BRIDGE SHEET NO.
Detailed By										SHEET
Bridge Projects Engr.										OF
Prelim. Plan By										SHEETS
Architect/Specialist	DATE	REVISION	BY	APP'D						

SR ____ JOB NO. ____ SHEET ____

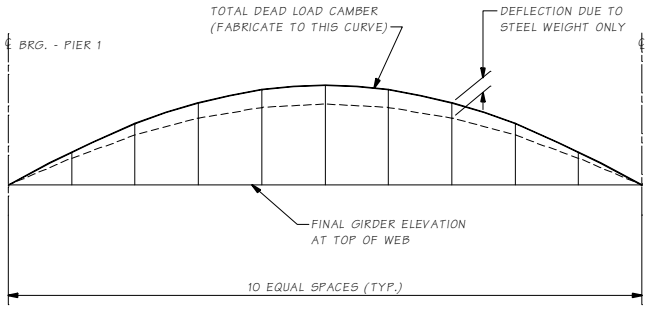

	TENTH POINTS								
	0.1	0.2	0.3	0.4	0.5	0.6	0.7	0.8	0.9
TOTAL DEAD LOAD CAMBER (IN.) δ	5⅜	9⅞	13⅛	15⅛	16	15⅛	13⅛	9⅞	5⅜
CAMBER DUE TO SELF WEIGHT OF STEEL (IN.) ψ	1	2	2½	3	3⅛	3	2½	2	1

DEAD LOAD CAMBER DIAGRAM

EFFECTS OF PROFILE GRADE ARE NOT SHOWN. FOR THE PURPOSE OF MEASURING CAMBER TOLERANCES AT THE TIME OF SHOP ASSEMBLY, GIRDER TOP FLANGES ARE EMBEDDED IN CONCRETE WITHOUT A DESIGNED HAUNCH.

δ - INCLUDES THE EFFECTS OF SLAB SHRINKAGE AND AN ALLOWANCE OF 10 PSF FOR DECK FORMWORK.

ψ - DOES NOT INCLUDE WEIGHT OF DECK FORMWORK.

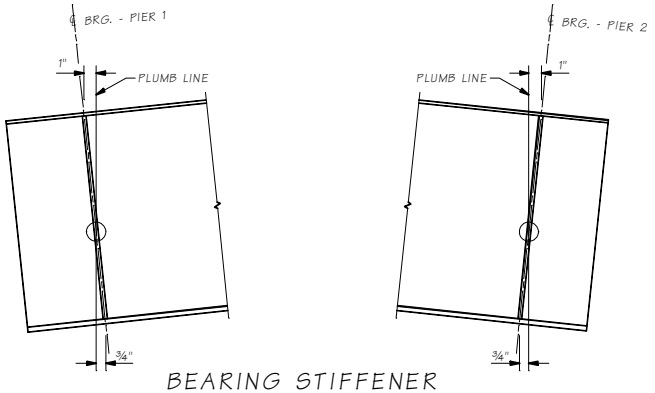

BEARING STIFFENER ROTATIONAL CAMBER DIAGRAM

OFFSETS TO COMPENSATE FOR TOTAL DEAD LOAD ROTATION. DOES NOT INCLUDE EFFECTS OF PROFILE GRADE.

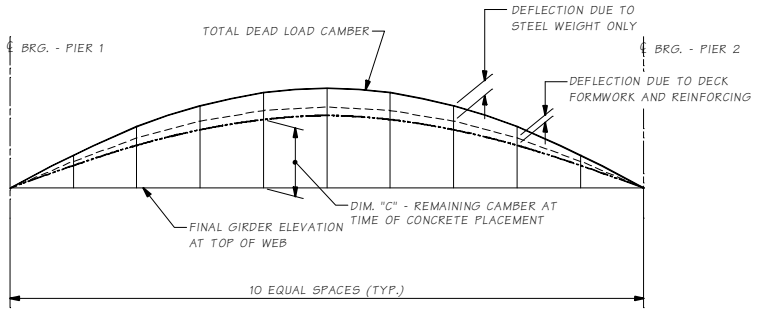

	TENTH POINTS								
	0.1	0.2	0.3	0.4	0.5	0.6	0.7	0.8	0.9
REMAINING CAMBER "C" GIR. A - C (IN.)	4	7¼	9¾	11⅛	11¾	11⅛	9¾	7¼	4

SCREED SETTING ADJUSTMENT DIAGRAM

ASSUMED SEQUENCE OF DECK FORMING:

1. SET ALL STEEL FRAMING AND RELEASE ANY SHORING.
2. SURVEY ELEVATIONS OF GIRDERS.
3. ADJUST SOFFIT (DECK FORMWORK) ELEVATIONS USING DIFFERENCE BETWEEN ACTUAL AND THEORETICAL GIRDER ELEVATIONS.
4. INSTALL DECK REINFORCING.
5. SET SCREED RAIL ELEVATIONS USING THEORETICAL PROFILE GRADES ADJUSTED BY DIM. "C", COMPENSATING FOR ADDITIONAL STEEL FRAMING ROTATION DUE TO CURVATURE AND/OR SKEW.

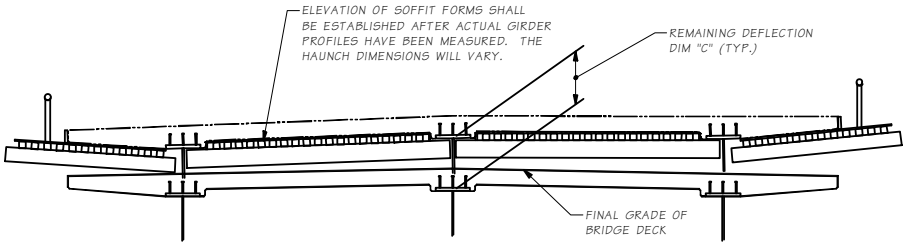

SCREED SETTING DETAIL

OFFSET CORRECTIONS FOR SETTING THE SCREED RAILS SHALL BE THE RESPONSIBILITY OF THE CONTRACTOR.

Bridge Design Engr.	M:\BRIDGELIB\BDM\Chapter 6\window files\S64-A6.wnd								
Supervisor					REGION NO.	STATE	FED. AID PROJ. NO.	SHEET NO.	TOTAL SHEETS
Designed By					10	WASH.			
Checked By					JOB NUMBER		BR-002(230)		
Detailed By									
Bridge Projects Engr.									
Prelim. Plan By									
Architect/Specialist	DATE	REVISION	BY	APP'D					

BRIDGE AND STRUCTURES OFFICE

Washington State Department of Transportation

CAMBER DIAGRAM

BRIDGE SHEET NO.

SHEET OF SHEETS

SR. ____ JOB NO. ____ SHEET ____

6.4-A6

Fri Jun 24 10:27:02 2011

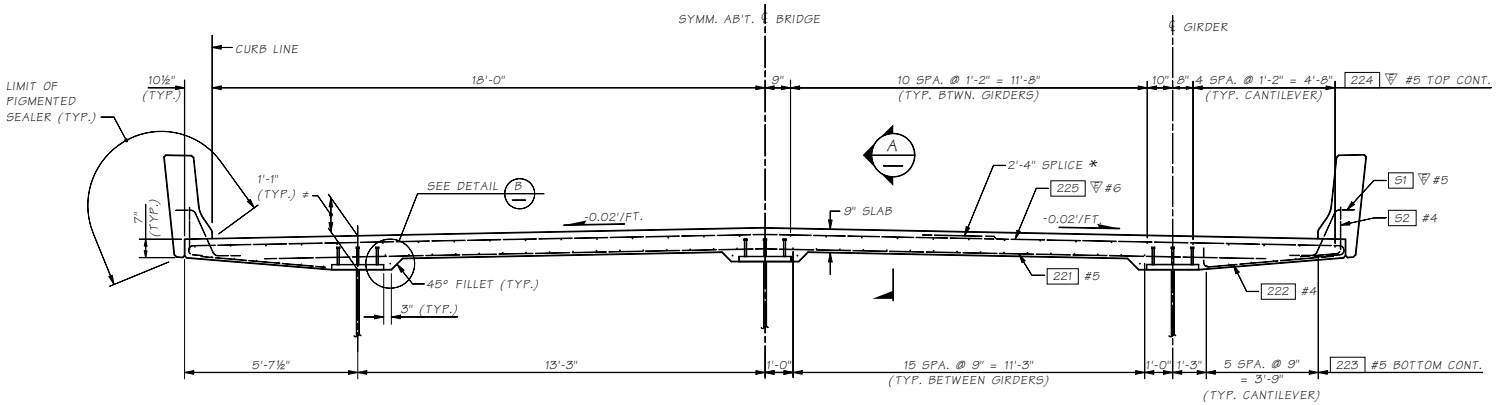

TYPICAL ROADWAY SECTION

* POSITION SPLICE MIDWAY BETWEEN GIRDERS. STAGGER SPLICES ABOUT ℄ BRIDGE, EVERY OTHER BAR. ROTATE HOOKS AS REQUIRED TO PROVIDE MINIMUM CONCRETE COVER.

≠ DIMENSIONS MAY VARY: REFER TO STD. SPEC. 6-03.3(39).

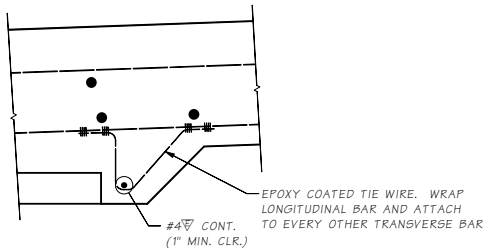

DETAIL B
TYPICAL EACH FILLET

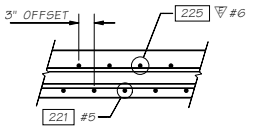

SECTION A

Bridge Design Engr.	M:\BRIDGELIB\BDM\Chapter 6\window files\S64-A7.wnd				REGION NO.	STATE	FED. AID PROJ. NO.	SHEET NO.	TOTAL SHEETS
Supervisor					10	WASH.			
Designed By					JOB NUMBER				
Checked By									
Detailed By									
Bridge Projects Engr.									
Prelim. Plan By									
Architect/Specialist	DATE	REVISION	BY	APPD					

BRIDGE AND STRUCTURES OFFICE

Washington State Department of Transportation

STEEL PLATE GIRDER ROADWAY SECTION

BRIDGE SHEET NO. SHEET OF SHEETS

SR ____ JOB NO. ____ SHEET ____

6.4-A7

Fri Sep 03 13:27:02 2010

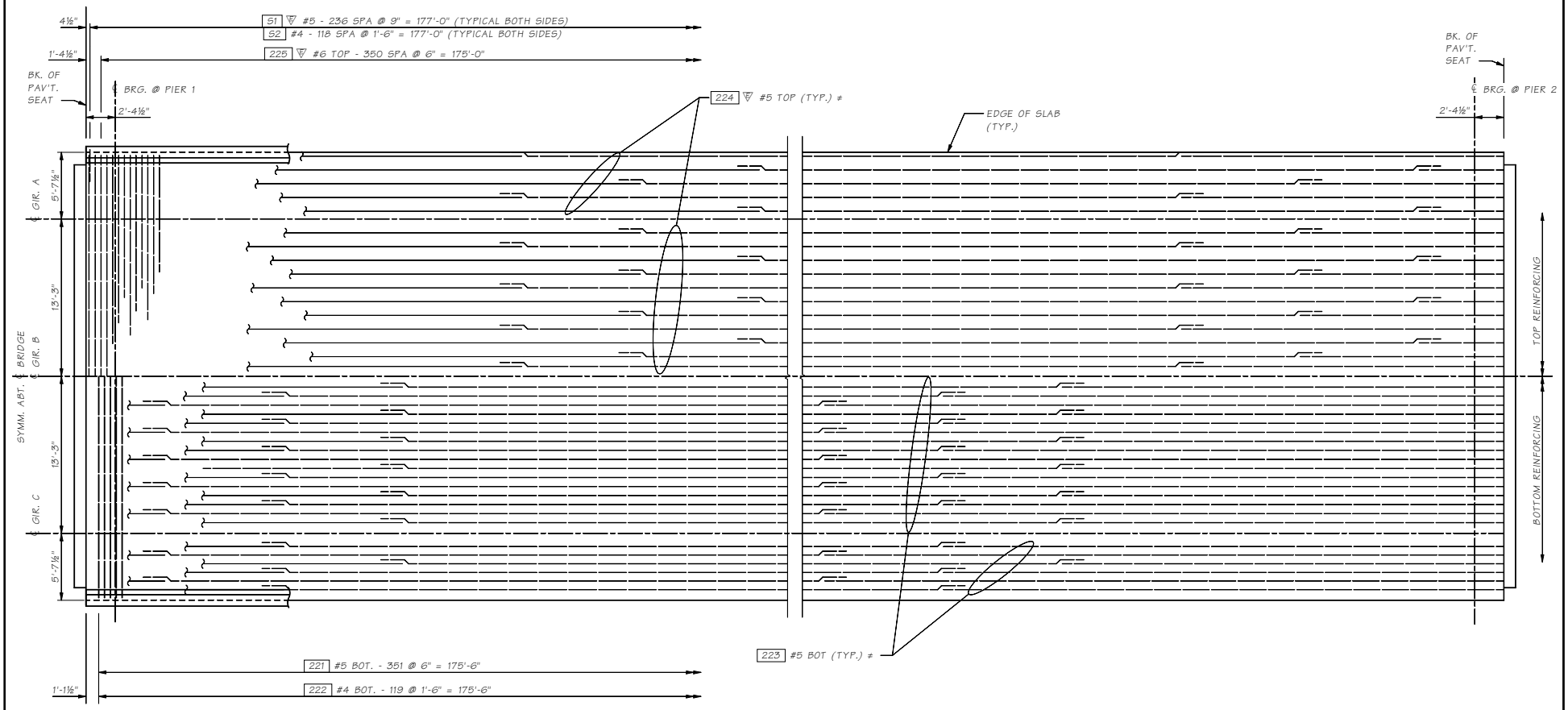

ROADWAY SLAB REINFORCING

NOTE:
2'-0" MINIMUM REBAR LAP SPLICE LENGTH FOR ALL LONGITUDINAL BARS.

≠ LOCATION OF REBAR SPLICES AT CONTRACTORS OPTION, EXCEPT ALL SPLICES SHALL BE ALTERNATED, SO NO MORE THAN 50% OF REBAR IS SPLICED AT THE SAME LOCATION, NORMAL TO ℄ OF BRIDGE.

SHEET
JOB NO.
SR

Bridge Design Engr.	M:\BRIDGELIB\BDM\Chapter 6\window files\S64-A8.wnd				REGION NO.	STATE	FED. AID PROJ. NO.	SHEET NO.	TOTAL SHEETS
Supervisor					10	WASH.			
Designed By					JOB NUMBER				
Checked By									
Detailed By									
Bridge Projects Engr.									
Prelim. Plan By									
Architect/Specialist	DATE	REVISION	BY	APP'D					

BRIDGE AND STRUCTURES OFFICE

Washington State Department of Transportation

STEEL PLATE GIRDER SLAB PLAN

BRIDGE SHEET NO.
SHEET
OF
SHEETS

Fri Sep 03 13:27:04 2010

6.4-A8

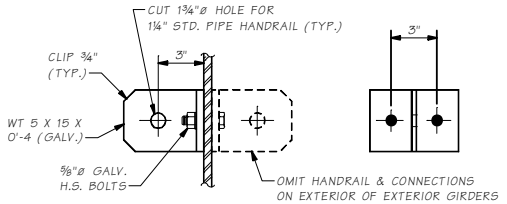

CLIP DETAIL

USE CLIP DETAIL(S) BETWEEN WEB STIFFENERS TO PROVIDE SUPPORT AT 8'-0" MAXIMUM SPACING.

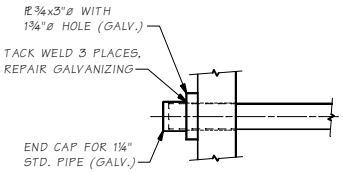

END CONNECTION DETAIL

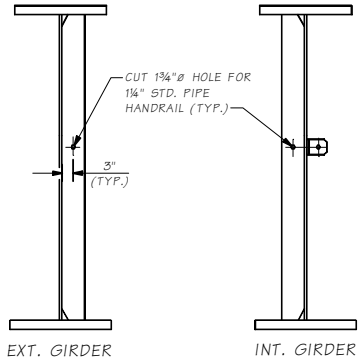

SECTION A

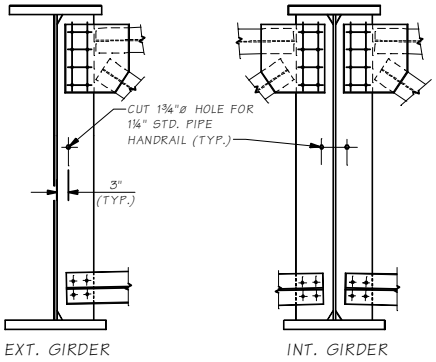

SECTION B

NOTES:

1. THE HANDRAIL SHALL BE 1¼" STD PIPE, ASTM A53 GR. B. ALL HARDWARE SHALL BE HOT DIPPED GALVANIZED.
2. THE INTERMEDIATE CLIPS SHALL BE ASTM A 992, GALVANIZED AFTER FABRICATION. HIGH STRENGTH BOLTS SHALL BE ASTM A 325, GALVANIZED. NUTS SHALL BE HEAVY HEX ASTM A 563 GRADE DH. UNION COUPLERS MAY BE UTILIZED IN THE VICINITY OF GIRDER FIELD SPLICES, PROPERLY TIGHTENED AND TACK WELDED.
3. FASTEN TO BRIDGE AFTER GIRDERS ARE SHOP PAINTED. OVERSPRAY FROM FIELD PAINTING IS PERMITTED.
4. HANDRAIL IS DESIGNED TO BE USED WITH SHORT LENGTH, FIXED LANYARDS. DESIGN LOADING IS 200 LB VERTICAL AND HORIZONTAL, ACTING CONCURRENTLY. ONLY ONE PERSON IS PERMITTED TO ATTACH WITHIN EACH 8 FOOT BAY.

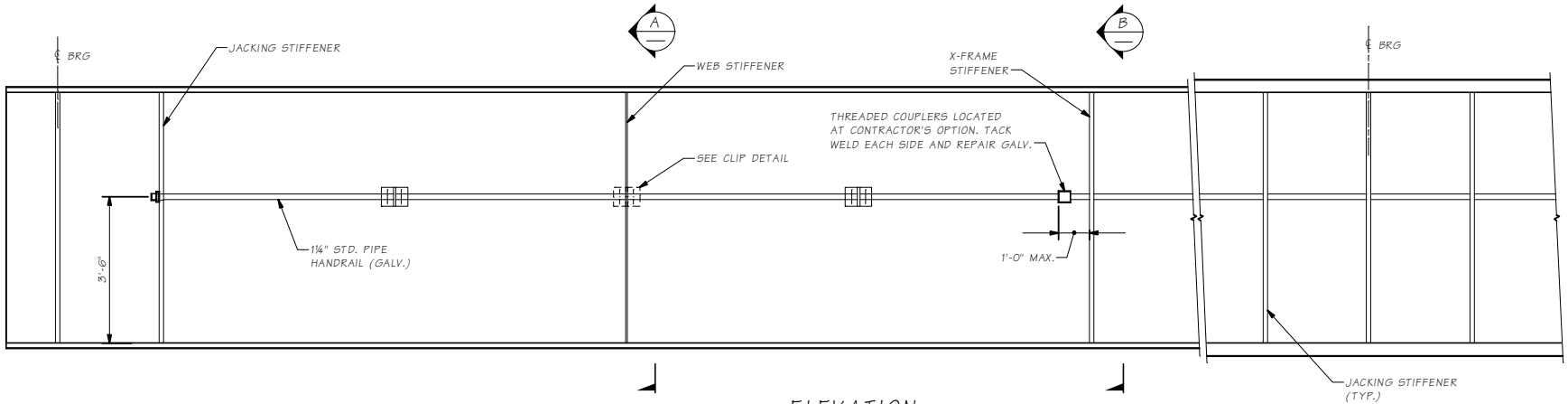

ELEVATION
GIRDER WITH HANDRAIL

Bridge Design Engr.	M:\BRIDGELIB\BDM\Chapter 6\window files\S64-A9.wnd				REGION NO.	STATE	FED. AID PROJ. NO.	SHEET NO.	TOTAL SHEETS
Supervisor					10	WASH.			
Designed By					JOB NUMBER				
Checked By									
Detailed By									
Bridge Projects Engr.									
Prelim. Plan By									
Architect/Specialist	DATE	REVISION	BY	APP'D					

BRIDGE AND STRUCTURES OFFICE

Washington State Department of Transportation

HANDRAIL

BRIDGE SHEET NO.

SHEET OF SHEETS

SHEET JOB NO. SR

6.4-A9

Fri Jun 24 10:31:32 2011

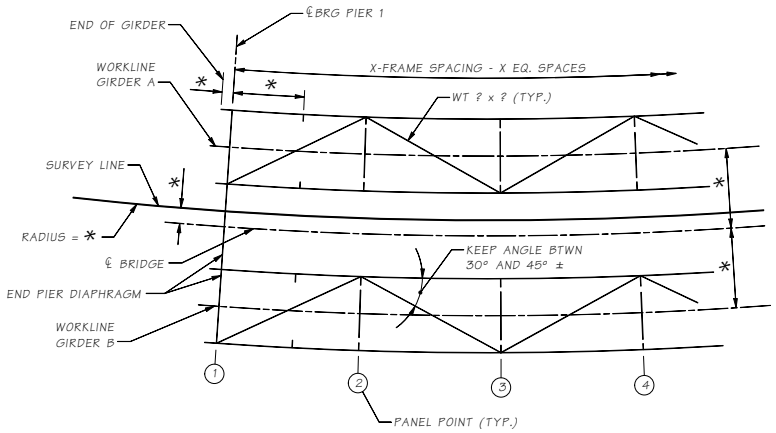

EXAMPLE - PARTIAL FRAMING PLAN

* PROVIDE PROJECT DIMENSIONS AND SPECIFY HOW MEASURED

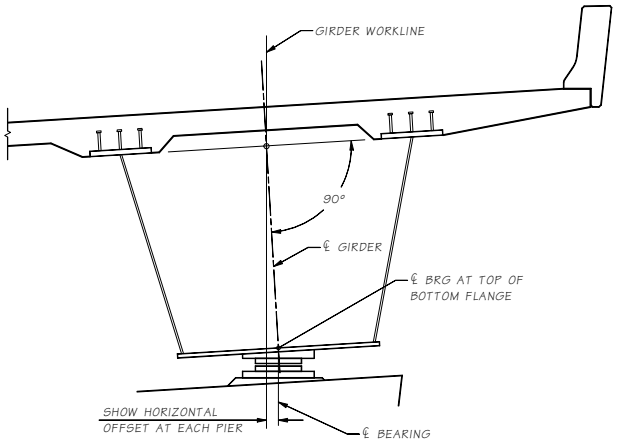

BEARING OFFSET DETAIL

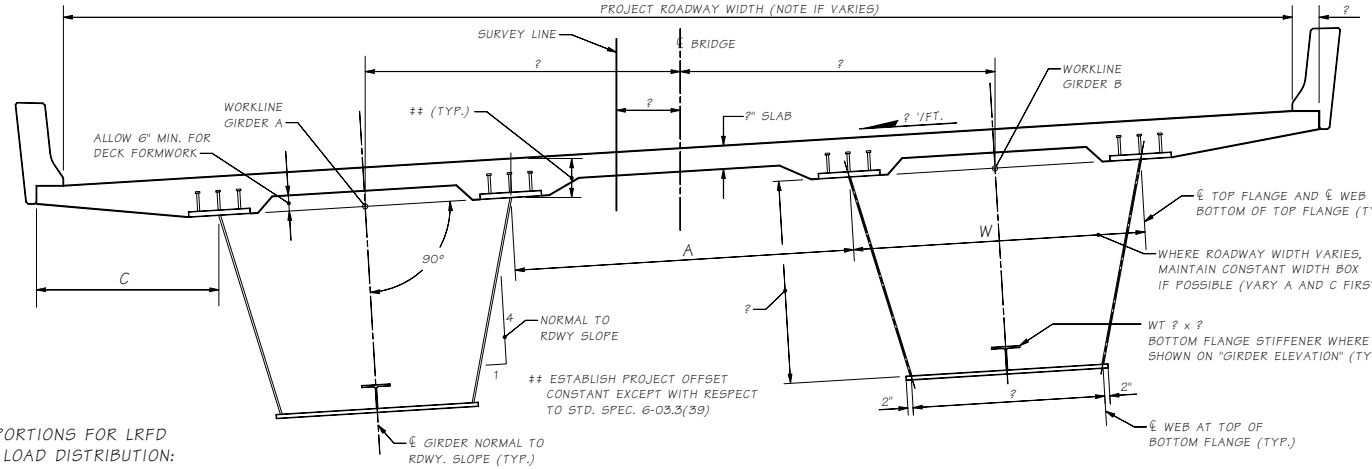

PROPORTIONS FOR LRFD LIVE LOAD DISTRIBUTION:

$C \leq 0.6W$ &
$C \leq 6$ FT.
$A = 0.8W$ TO $1.2W$

TYPICAL BOX GIRDER GEOMETRICS

NOTE: ALL DIMENSIONS CONTROLLING DECK AND BOX LOCATIONS ARE TO BE MEASURED HORIZONTALLY AND VERTICALLY, IN REFERENCE TO ALL ROADWAY GEOMETRIC DATA. THE BOX GEOMETRICS SHOULD REMAIN CONSTANT AND TIED TO THE GIRDER WORKLINE AS SHOWN ABOVE.

BOX GIRDER DETAIL NOTES:

DETAILS PROVIDED HEREIN ARE EXAMPLES ONLY AND REQUIRE PROJECT SPECIFIC ATTENTION TO DESIGN AND DETAILING. THAT IS, THEY ARE NOT INTENDED TO BE USED AS CONTRACT PLAN STANDARDS.

CERTAIN GEOMETRIC PRACTICES SHOULD NOT BE MODIFIED WITHOUT CONSULTING BRIDGE FABRICATORS. THESE DETAILS ARE A PARTIAL COMPILATION OF INDUSTRY EFFORTS TO STANDARDIZE BOX GIRDER FABRICATION AND SHOP PLAN PREPARATION.

BOX GIRDER DEPTH SHOULD NOT BE LESS THAN 5'-0", THE PREFERRED MINIMUM DEPTH IS 6'-6".

ALL GIRDERS MUST INCLUDE PROVISIONS FOR INSPECTION ACCESS AND VENTILATION, INCLUDING LIGHTING AND POWER.

PROVISION FOR REMOVING DECK FORMS MUST BE DETAILED IN THE PLANS. A MINIMUM 4'-0" X 4'-0" OPENING, ACCESSIBLE FROM EACH CELL IS NEEDED.

Bridge Design Engr.	M:\BRIDGELIB\BDM\Chapter 6\box girder details.MAN				REGION NO.	STATE	FED. AID PROJ. NO.	SHEET NO.	TOTAL SHEETS
Supervisor					10	WASH.			
Designed By									
Checked By					JOB NUMBER				
Detailed By									
Bridge Projects Engr.									
Prelim. Plan By									
Architect/Specialist	DATE	REVISION	BY	APP'D					

BRIDGE AND STRUCTURES OFFICE

Washington State Department of Transportation

BOX GIRDER GEOMETRICS AND PROPORTIONS

BRIDGE SHEET NO. / SHEET / OF / SHEETS

SR / JOB NO. / SHEET

6.4-A10

Fri Sep 03 13:26:50 2010

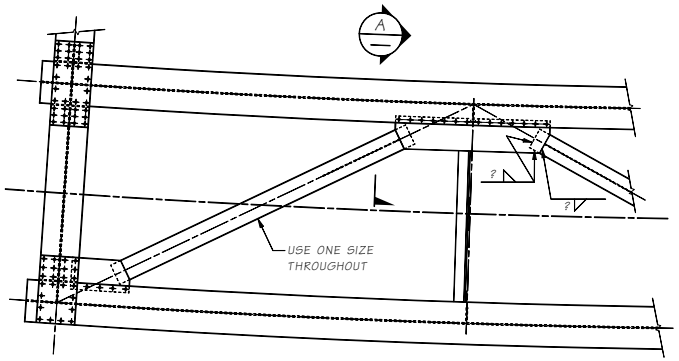

PLAN - EXAMPLE TOP LATERAL DETAILS

CONNECT LATERALS TO BOTTOM SIDE OF TOP FLANGE
USE BOLTED GUSSET PLATE OR BOLT DIRECTLY TO FLANGE
SIZE OF LATERALS AND CONNECTIONS WILL DEPEND ON LOADS

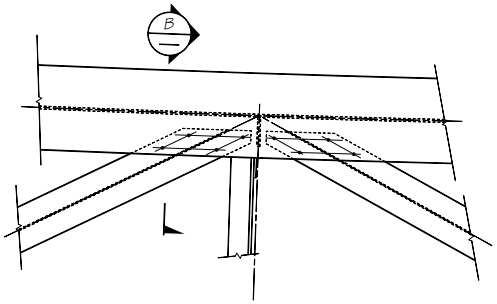

DETAIL SHOWING DIRECT BOLTING

PREFERRED ALTERNATIVE WHERE SPACE AND LOADING PERMITS
MAY REQUIRE THE USE OF 1"ø AASHTO M253-X BOLTS, DO NOT WELD
VERIFY FLANGE STRESSES VICINITY BOLT HOLES ARE WITHIN ALLOWABLE

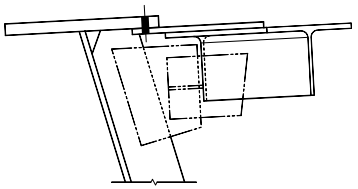

VIEW A

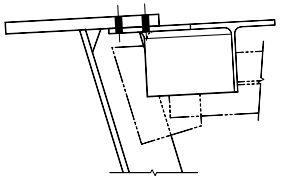

VIEW B

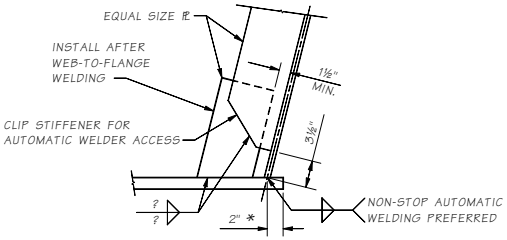

LOWER TRANSVERSE STIFFENER DETAIL

* BOTTOM FLANGE EXTENSION TO ALLOW AUTOMATIC WELDER USE

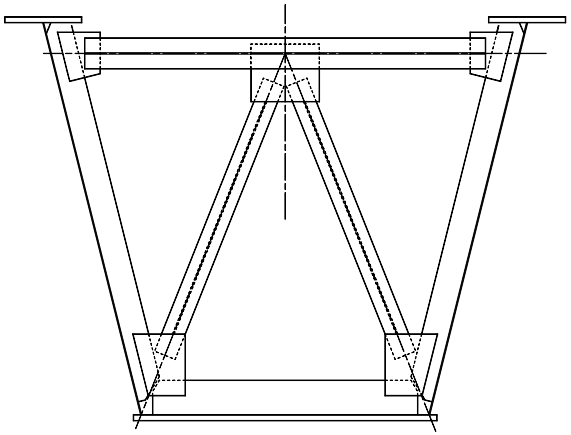

EXAMPLE CROSSFRAME WITHOUT FLANGE STIFFENER

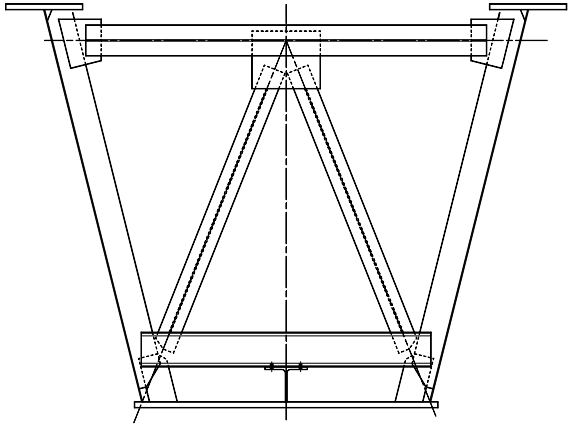

EXAMPLE CROSSFRAME REGIONS WITH FLANGE STIFFENER

Bridge Design Engr.	M:\BRIDGELIB\BDM\Chapter 6\BDM BOX GIRDER DETAILS.MAN				REGION NO.	STATE	FED. AID PROJ. NO.	SHEET NO.	TOTAL SHEETS
Supervisor					10	WASH.			
Designed By									
Checked By					JOB NUMBER				
Detailed By									
Bridge Projects Engr.									
Prelim. Plan By									
Architect/Specialist	DATE	REVISION	BY	APP'D					

BRIDGE AND STRUCTURES OFFICE

Washington State Department of Transportation

EXAMPLE BOX GIRDER DETAILS

BRIDGE SHEET NO.
SHEET OF SHEETS

JOB NO. SHEET
SR

Fri Sep 03 13:26:48 2010

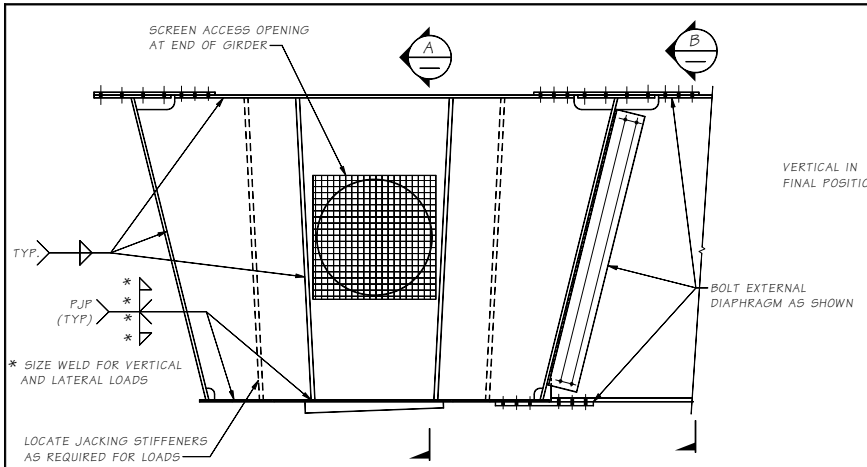

EXAMPLE END DIAPHRAGM

SHEAR CONNECTORS NOT SHOWN. AS A MINIMUM, PROVIDE FULL SHEAR CAPACITY = LATERAL LOADS TO PIERS (DECK TO BRG. LOAD PATH)

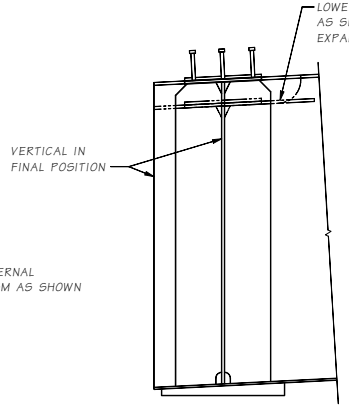

SECTION A

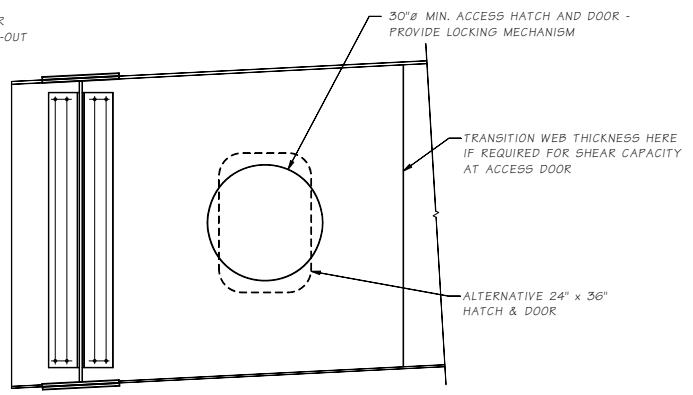

VIEW B SHOWING SIDE EXIT HATCH

USE SIDE EXIT HATCH AND WALKWAY BETWEEN BOXES FOR RETURN TRIP INSPECTION ACCESS, AT LEAST ONE END

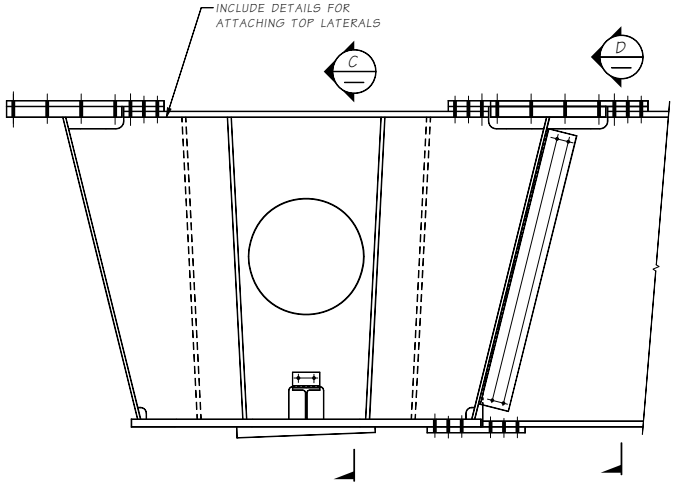

EXAMPLE INTERIOR PIER DIAPHRAGM

SHEAR CONNECTORS NOT SHOWN. AS A MINIMUM, PROVIDE FULL SHEAR CAPACITY = LATERAL LOADS TO PIERS (DECK TO BRG. LOAD PATH)

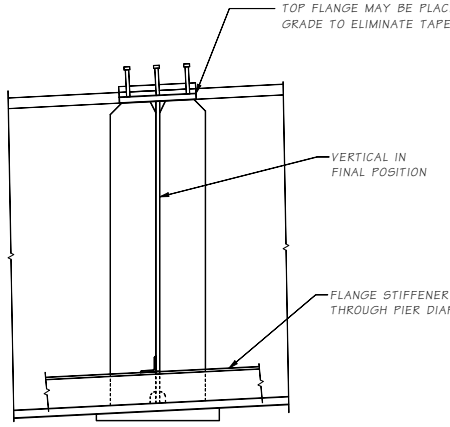

SECTION C

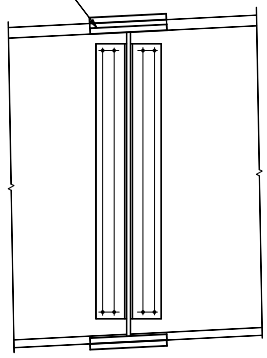

VIEW D

Bridge Design Engr.	M:\BRIDGELIB\BDM\Chapter 6\BDM BOX GIRDER DETAILS 3.MAN				REGION NO.	STATE	FED. AID PROJ. NO.	SHEET NO.	TOTAL SHEETS
Supervisor					10	WASH.			
Designed By					JOB NUMBER				
Checked By									
Detailed By									
Bridge Projects Engr.									
Prelim. Plan By									
Architect/Specialist	DATE	REVISION	BY	APP'D					

BRIDGE AND STRUCTURES OFFICE

Washington State Department of Transportation

EXAMPLE BOX GIRDER PIER DIAPHRAGM DETAILS

BRIDGE SHEET NO.

SHEET OF SHEETS

JOB NO. 01344? SHEET 3

SR

Fri Sep 03 13:26:46 2010

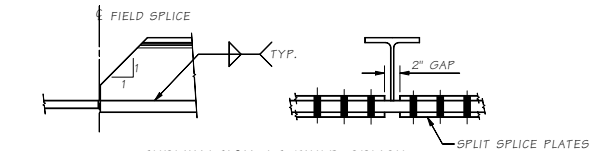

TERMINATION AT FIELD SPLICE

THIS IS THE PREFERED TERMINATION METHOD

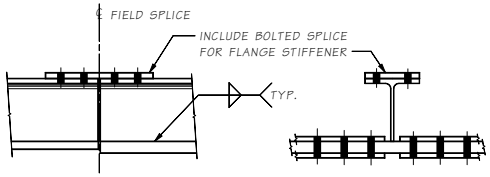

CONTINUATION PAST FIELD SPLICE

BOTTOM FLANGE STIFFENER TERMINATION DETAILS

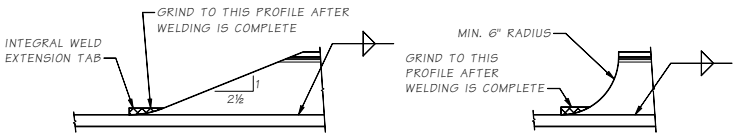

ALT. 1

USE WHERE TERMINATION OCCURS IN REGION OF HIGH STRESS RANGE (AVOID IF POSSIBLE)

ALT. 2

USE WHERE STRESS RANGE IS LOW (CATEGORY C DETAIL)

BOTTOM FLANGE STIFFENER TERMINATIONS BEYOND FIELD SPLICE

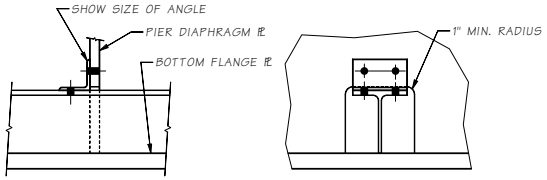

STIFFENER DETAIL AT PIER DIAPHRAGM

BEARING NOT SHOWN THIS DETAIL - LOCATE BRG STIFFENERS TO CLEAR

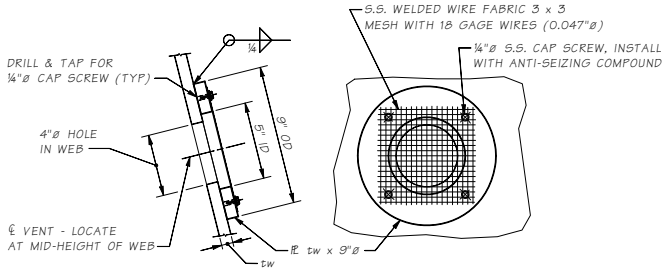

VENT HOLE DETAILS

SHOW LOCATIONS OF VENT HOLES ON "GIRDER ELEVATION"
SPACE VENTS AT ABOUT 50 FT. CENTERS, STAGGER LT & RT

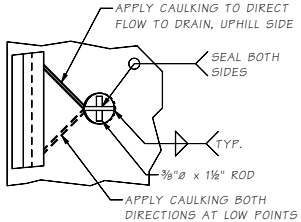

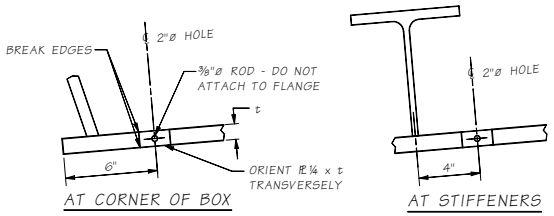

AT CORNER OF BOX AT STIFFENERS

DRAIN HOLE DETAILS

SHOW ALL LOW POINTS IN BRIDGE TO LOCATE DRAINS
DO NOT USE WHERE OTHER FEATURES DRAIN WATER

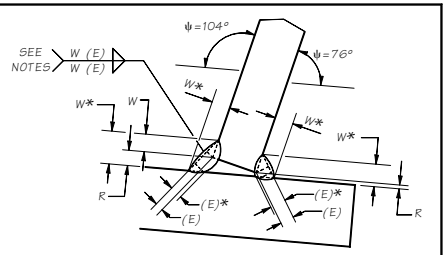

DETAIL FOR WEBS < ¾"

ACCEPTABLE PROVIDED ROOT OPENINGS MEET AWS D1.5 FIT-UP REQUIRMENTS & EFFECTIVE THROAT IS MAINTAINED FOR SINGLE PASS WELDING

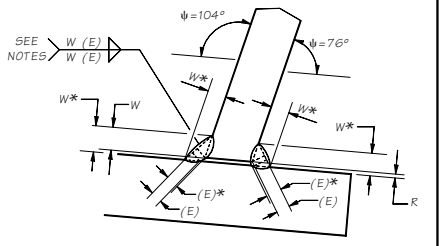

WEB-TO-FLANGE WELD DETAILS

* REFER TO AWS D1.5 FIG. 2.3, SECT. 3.3.1, AND ANNEX II FOR SKEWED T-JOINTS
BOTTOM FLANGE SHOWN, TOP SIMILAR

NOTES: W IS NORMALLY ⅝" AND SHOULD BE SIZED BY THE DESIGNER

EFFECTIVE THROAT (E) SHOULD BE DETERMINED BY THE DESIGNER, NORMALLY ¼" MINIMUM. THIS DIMENSION MUST BE ACHIEVED IN PRODUCTION.

THE FABRICATOR MUST COMPENSATE ACTUAL WELD SIZES W AND (E) FOR ROOT (R) AND DIHEDRAL ψ ASSUMING ⅝" WELD SIZE, W*=0.27"+R; ψ=76°
W*=0.35"+R; ψ=104°

REDUCTION OF WELD LEG SIZE IS ACCEPTABLE PROVIDED ACTUAL EFFECTIVE THROAT IS DETERMINED BY JOINT QUALIFICATION

SINGLE, CONTINUOUS PASS WELDING IS DESIRED

WELD SYMBOL IN PLANS SHOULD ONLY SHOW W & (E), WITH A NOTE TO CORRECT PER AWS D1.5

Bridge Design Engr.	M:\BRIDGELIB\BDM\Chapter 6\bdm box details 2.MAN				REGION NO.	STATE	FED. AID PROJ. NO.	SHEET NO.	TOTAL SHEETS
Supervisor					10	WASH.			
Designed By									
Checked By					JOB NUMBER				
Detailed By									
Bridge Projects Engr.									
Prelim. Plan By									
Architect/Specialist	DATE	REVISION	BY	APP'D					

BRIDGE AND STRUCTURES OFFICE

Washington State Department of Transportation

EXAMPLE BOX GIRDER MISCELLANEOUS DETAILS

BRIDGE SHEET NO. SHEET OF SHEETS

SR JOB NO. a13447 SHEET 4

6.4-A13

Fri Sep 03 13:26:43 2010

Chapter 7 Substructure Design Contents

7.1 General Substructure Considerations 7.1-1
7.1.1 Foundation Design Process 7.1-1
7.1.2 Foundation Design Limit States 7.1-4
7.1.3 Seismic Design. 7.1-4
7.1.4 Substructure and Foundation Loads 7.1-4
7.1.5 Concrete Class for Substructure 7.1-5
7.1.6 Foundation Seals 7.1-6

7.2 Foundation Modeling For Seismic Loads 7.2-1
7.2.1 General 7.2-1
7.2.2 Substructure Elastic Dynamic Analysis Procedure 7.2-1
7.2.3 Bridge Model Section Properties 7.2-2
7.2.4 Bridge Model Verification 7.2-3
7.2.5 Deep Foundation Modeling Methods 7.2-4
7.2.6 Lateral Analysis of Piles and Shafts 7.2-8
7.2.7 Spread Footing Modeling 7.2-12

7.3 Column Design 7.3-1
7.3.1 Preliminary Plan Stage 7.3-1
7.3.2 General Column Criteria 7.3-1
7.3.3 Column Design Flow Chart – Evaluation of Slenderness Effects 7.3-2
7.3.4 Slenderness Effects 7.3-3
7.3.5 Moment Magnification Method 7.3-3
7.3.6 Second-Order Analysis 7.3-3
7.3.7 Shear Design 7.3-4

7.4 Column Reinforcement 7.4-1
7.4.1 Reinforcing Bar Material. 7.4-1
7.4.2 Longitudinal Reinforcement Ratio 7.4-1
7.4.3 Longitudinal Splices 7.4-1
7.4.4 Longitudinal Development 7.4-3
7.4.5 Transverse Reinforcement 7.4-4
7.4.6 Hinge Diaphragms 7.4-9
7.4.7 Reduced Column Fixity 7.4-11

7.5 Abutment Design and Details 7.5-1
7.5.1 Abutment Types 7.5-1
7.5.2 Embankment at Abutments 7.5-3
7.5.3 Abutment Loading 7.5-3
7.5.4 WSDOT Temporary Construction Load Cases. 7.5-4
7.5.5 Abutment Bearings and Girder Stops 7.5-4
7.5.6 Abutment Expansion Joints 7.5-6
7.5.7 Open Joint Details 7.5-6
7.5.8 Construction Joints 7.5-8
7.5.9 Abutment Wall Design 7.5-8
7.5.10 Drainage and Backfilling 7.5-10

7.6 Wing/Curtain Wall at Abutments 7.6-1
7.6.1 Traffic Barrier Loads. 7.6-1
7.6.2 Wingwall Design 7.6-1
7.6.3 Wingwall Detailing 7.6-1

7.7 Footing Design 7.7-1
7.7.1 General Footing Criteria 7.7-1
7.7.2 Loads and Load Factors 7.7-2
7.7.3 Geotechnical Report Summary 7.7-3
7.7.4 Spread Footing Structural Design. 7.7-4
7.7.5 Footing Concrete Design on Pile Supports 7.7-9

7.8 Drilled Shafts. 7.8-1
7.8.1 Axial Resistance. 7.8-1
7.8.2 Structural Design and Detailing 7.8-5

7.9 Piles and Piling 7.9-1
7.9.1 Pile Types 7.9-1
7.9.2 Single Pile Axial Resistance 7.9-2
7.9.3 Block Failure 7.9-2
7.9.4 Pile Uplift 7.9-3
7.9.5 Pile Spacing. 7.9-3
7.9.6 Structural Design and Detailing of CIP Concrete Piles 7.9-3
7.9.7 Pile Splices 7.9-4
7.9.8 Pile Lateral Design 7.9-4
7.9.9 Battered Piles. 7.9-4
7.9.10 Pile Tip Elevations and Quantities 7.9-5
7.9.11 Plan Pile Resistance 7.9-5

Appendix 7-B1 Linear Spring Calculation Method II (Technique I). 7-B1-1
Appendix 7-B2 Non-Linear Springs Method III 7-B2-1
Appendix 7-B3 Pile Footing Matrix Example Method II (Technique I) 7-B3-1

7.1 General Substructure Considerations

Note that in the following guidelines where reference is made to AASHTO LRFD, the item can be found in the current AASHTO LRFD Bridge Design Specifications, and any reference to AASHTO Seismic, the item can be found in the current AASHTO Guide Specifications for LRFD Seismic Bridge Design.

7.1.1 Foundation Design Process

A flowchart is provided in Figure 7.1.1-1 which illustrates the overall design process utilized by the WSDOT Bridge and Structures Office to accomplish an LRFD foundation design. Note this process is also outlined in the WSDOT *Geotechnical Design Manual* M 46-03 (GDM) in Section 8.2. The Bridge and Structures Office (BO), the Geotechnical Branch (GB) and the Hydraulics Branch (HB) have been abbreviated. The steps in the flowchart are defined as follows:

A. **Scoping Level Design** – This phase of the design process involves the region requesting initial bridge options and costs for a future project. Depending on the complexity of the project, this phase could include a Type, Size and Location (TS&L) Report.

   This design step may result in informal communication between the BO and the GB and/or HB with the request for preliminary information and recommendations. The level of communication will depend on the available information provided by the region and the complexity of the project. The type of information that may be received from the GB and HB are as follows:

   - Anticipated soil site conditions
   - Maximum embankment slopes
   - Possible foundation types and geotechnical hazards such as liquefaction
   - Scour potential for piers if a water crossing
   - Potential for future migration of a stream or river crossing

   In general, these recommendations rely on existing site data. Site borings may not be available and test holes are drilled later. The GB provides enough information to select potential foundation types for an initial scoping level or TS&L level plan and estimate.

B. **Develop Site Data and Preliminary Bridge Plan** – In the second phase, the BO obtains site data from the region (see Section 2.2) and develops the preliminary bridge plan. The preliminary pier locations determine soil boring locations at this time. The GB and/or the HB may require the following information to continue their preliminary design.

   - Structure type and magnitude of settlement the structure can tolerate (both total and differential).
   - At abutments – Approximate maximum top of foundation elevation.
   - At interior piers – The initial size, shape and number of columns and how they are configured with the foundation (e.g., whether a single foundation element supports each column, or one foundation element supports multiple columns)
   - At water crossings – Pier scour depth, if known, and any potential for migration of the water crossing in the future. Typically, the GB and the BO should coordinate pursuing this information with the HB.
   - Any known structural constraints that affect the foundation type, size, or location.
   - Any known constraints that affect the soil resistance (utilities, construction staging, excavation, shoring, and falsework).

C. **Preliminary Foundation Design** – The third phase is a request by the BO for a preliminary foundation memorandum. The GB memo will provide preliminary soil data required for structural analysis and modeling. This includes any subsurface conditions and the preliminary subsurface profile.

The concurrent geotechnical work at this stage includes:

- Completion of detailed boring logs and laboratory test data
- Development of foundation type, soil capacity, and foundation depth
- Development of static/seismic soil properties and ground acceleration
- Recommendations for constructability issues

The BO may also request the HB to provide preliminary scour design recommendations if the structure is located over a water crossing.

D. **Structural Analysis and Modeling** – In the fourth phase, the BO performs a structural analysis of the superstructure and substructure using a bridge model and preliminary soil parameters. Through this modeling, the designer determines loads and sizes for the foundation based on the controlling LRFD limit states. Structural and geotechnical design continues to investigate constructability and construction staging issues during this phase.

In order to produce a final geotechnical report, the BO provides the following structural feedback to the geotechnical engineer:

- Foundation loads for service, strength, and extreme limit states.
- Foundation size/diameter and depth required to meet structural design.
- Foundation details that could affect the geotechnical design of the foundations.
- Foundation layout plan.
- Assumed scour depths for each limit state (if applicable)

For water crossings, the BO also provides the information listed above to the hydraulics engineer to verify initial scour and hydraulics recommendations are still suitable for the site.

(See Chapter 2 for examples of pile design data sheets that shall be filled out and submitted to the geotechnical engineer at the early stage of design.)

E. **Final Foundation Design** – The last phase completes the geotechnical report and allows the final structural design to begin. The preliminary geotechnical assumptions are checked and recommendations are modified, if necessary. The final report is complete to a PS&E format since the project contract will contain referenced information in the geotechnical report, such as:

- All geotechnical data obtained at the site (boring logs, subsurface profiles, and laboratory test data)
- All final foundation recommendations
- Final constructability and staging recommendations

The designer reviews the final report for new information and confirms the preliminary assumptions. With the foundation design complete, the final bridge structural design and detailing process continues to prepare the bridge plans. Following final structural design, the structural designer shall follow up with the geotechnical designer to ensure that the design is within the limits of the geotechnical report.

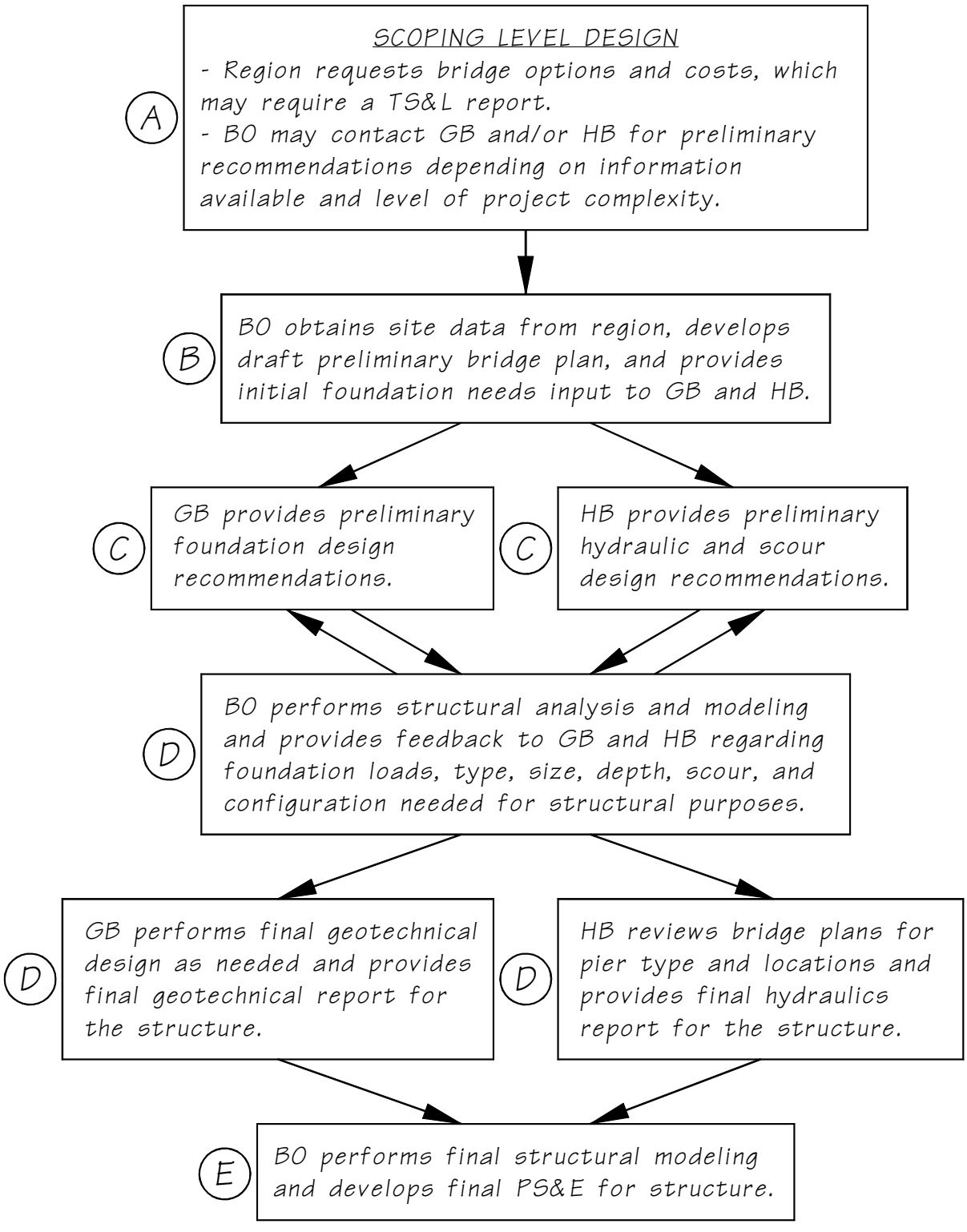

Overall Design Process for LRFD Foundation Design
Figure 7.1.1-1

7.1.2 Foundation Design Limit States

The controlling limit states for WSDOT projects for substructure design are described as follows:

Strength I	Relating to the normal vehicular use
Strength III	Relating to the bridge exposed to wind
Strength V	Relating to the normal vehicular use and wind
Extreme-Event I	Relating to earthquake
Service I	Relating to normal operational use and wind

7.1.3 Seismic Design

The seismic design of all substructures shall be in accordance with the AASHTO Seismic Specifications except as noted otherwise.

7.1.4 Substructure and Foundation Loads

Figure 7.1.4-1 below provides a common basis of understanding for load location and orientations for substructure design. This figure also shows elevations required for abutment and substructure design. Note that for shaft and some pile foundation designs, the shaft or pile may form the column as well as the foundation element.

Spread footings usually have a design orientation normal to the footing. Since bridge loads are longitudinal and transverse, skewed superstructure loads are converted (using vector components) to normal and parallel footing loads. Deep foundation analysis usually has a normal/parallel orientation to the pier in order to simplify group effects.

Substructure elements are to carry all of the loads specified in AASHTO Seismic and LRFD specs. Selecting the controlling load conditions requires good judgment to minimize design time. All anticipated dead load (*DC*) conditions shall be accounted for during a substructure design. Sidesway effect shall be included where it tends to increase stresses. For live loads (*LL*), the dynamic allowance (*IM*) shall be applied in accordance with AASHTO LRFD 3.6.2 and is not included in the design of buried elements of the substructure. Portions of the abutments in contact with the soil are considered buried elements.

Bridge design shall consider construction loads to ensure structural stability and prevent members from overstress. For example, temporary construction loads caused by placing all of the precast girders on one side of a crossbeam can overload a single column pier. Construction loads shall also include live loads from potential construction equipment. The plans shall show a construction sequence and/or notes to avoid unacceptable loadings.

On curved bridges, the substructure design shall consider the eccentricity resulting from the difference in girder lengths and the effects of torsion. When superstructure design uses a curved girder theory, such as the V-Load Method, the reactions from such analysis must be included in the loads applied to the substructure.

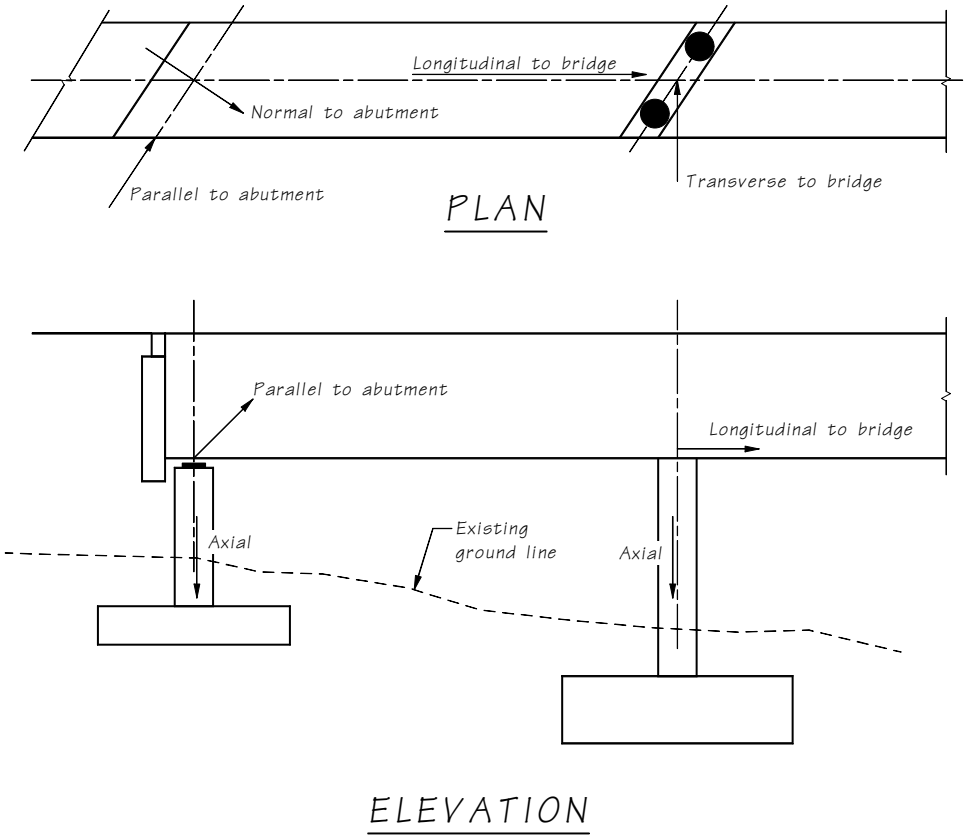

Substructure Directional Forces
Figure 7.1.4-1

7.1.5 Concrete Class for Substructure

The concrete class for all substructure elements shall be Class 4000. This includes footings, pedestals, massive piers, columns, crossbeams, traffic barriers, and retaining walls, wingwalls, and curtain walls connected to the bridge substructure or superstructure. Foundation seals shall be Class 4000W. Shafts and cast-in-place piles shall be Class 4000P.

7.1.6 Foundation Seals

A concrete seal within the confines of a cofferdam permits construction of a pier footing and column in the dry. This type of underwater construction is practical to a water depth of approximately 50 feet.

Seal concrete is placed underwater with the use of a tremie. A tremie is a long pipe that extends to the bottom of the excavation and permits a head to be maintained on the concrete during placement. After the concrete has been placed and has obtained sufficient strength, the water within the cofferdam is removed. In Figure 7.1.6-1, some of the factors that must be considered in designing a seal are illustrated.

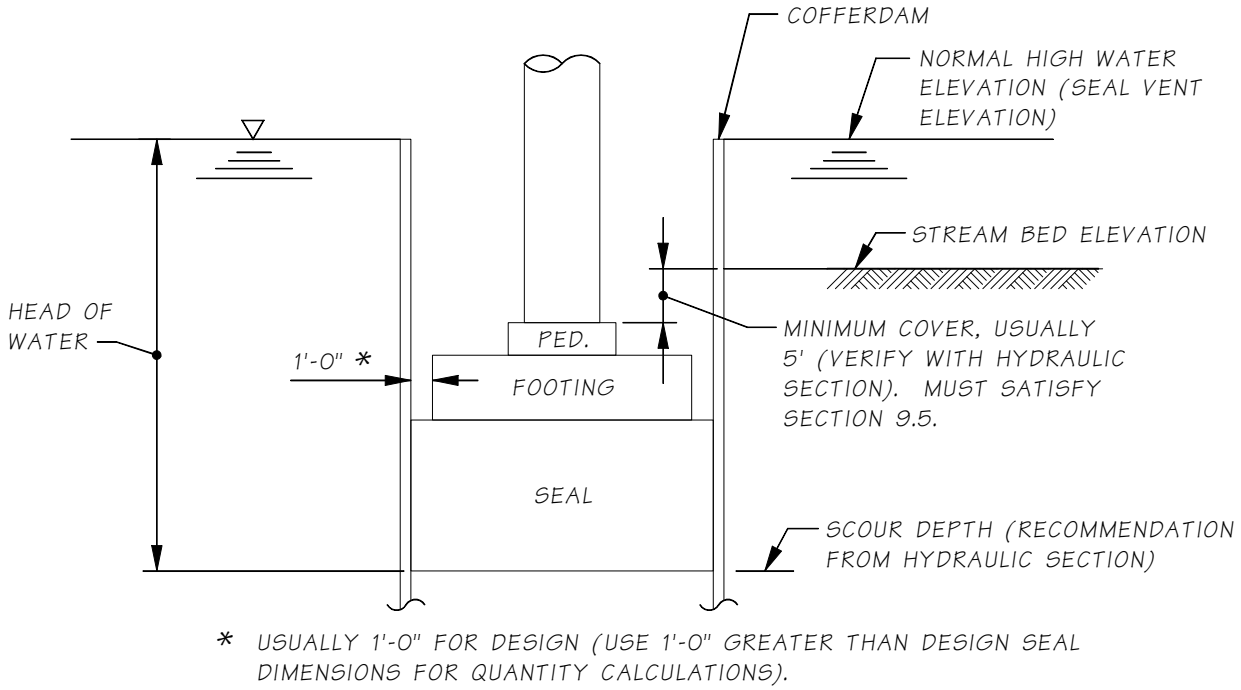

Figure 7.1.6-1

A. **General Seal Criteria** – The normal high water elevation is defined as the highest water surface elevation that may normally be expected to occur during a given time period. This elevation, on the hydraulics data sheet, isobtained from discussions with local residents or by observance of high water marks at the site. The normal high water is not related to any flood condition.

1. **Seal Vent Elevation** – The Hydraulics Branch recommends a seal vent elevation in accordance with the following criteria.

   a. **Construction Time Period Not Known** – If the time period of the footing construction is not known, the vent elevation reflects the normal high water elevation that might occur at any time during the year.

   b. **Construction Time Period Known** – If the time period of the footing construction can be anticipated, the vent elevation reflects the normal high water elevation that might occur during this time period. (If the anticipated time period of construction is later changed, the Hydraulics Branch shall be notified and appropriate changes made in the design.)

2. **Scour Depth** – The Hydraulics Branch determines the depth of the anticipated scour. The bottom of footing, or bottom of seal if used, shall be no higher than the scour depth elevation. After preliminary footing and seal thicknesses have been determined, the bridge designer shall review the anticipated scour elevation with the Hydraulics Branch to ensure that excessive depths are not used.

3. **Foundation Elevation Recommended in Geotechnical Report** – Based on the results obtained from test borings at the site, the geotechnical engineer determines a foundation elevation, bearing capacity and settlement criteria. If other factors control, such as scour or footing cover, the final footing elevation shall be adjusted as required.

4. **Unusual Conditions** – Unusual site conditions such as rock formations or deep foundations require special considerations in order to obtain the most optimum design. The proposed foundation design/construction shall be discussed with both the Geotechnical Branch and the Hydraulics Branch prior to final plan preparation.

B. **Spread Footing Seals** – The Geotechnical Branch will generally recommend whether a foundation seal may or may not be required for construction. Bearing loads are the column moments applied at the base of the footing and vertical load applied at the bottom of the seal. The seal is sized for the soil bearing capacity. Overturning stability need only be checked at the base of the pier footing.

1. **When a Seal is Required During Construction** – If the footing can be raised without violating cover requirements, the bottom of the seal elevation shall be the lower of the scour elevation or the foundation elevation as recommended by the geotechnical engineer. The bottom of the seal may be lower than the scour elevation or foundation elevation due to cover requirements. Spread footing final design shall include the dead load weight of the seal.

2. **When a Seal May Not Be Required for Construction** – Both methods of construction are detailed in the plans when it is not clear if a seal is required for construction. The plans must detail a footing with a seal and an alternate without a seal. The plan quantities are based on the footing designed with a seal. If the alternate footing elevation is different from the footing with seal, it is also necessary to note on the plans the required changes in rebar such as length of column bars, increased number of ties, etc. Note that this requires the use of either General Special Provision (GSP) 02306B1.GB6 or 02306B2.GB6.

C. **Pile Footing Seals** – The top of footing, or pedestal, is set by the footing cover requirements. The bottom of seal elevation is based on the stream scour elevation determined by the Hydraulics Branch. A preliminary analysis is made using the estimated footing and seal weight, and the column moments and vertical load at the base of the footing to determine the number of piles and spacing. The seal size shall be 1′-0″ larger than the footing all around. If the seal is omitted during construction, the bottom of footing shall be set at the scour elevation and an alternate design is made.

In general seal design requires determining a thickness such that the seal weight plus any additional resistance provided by the bond stress between the seal concrete and any piling is greater than the buoyant force (determined by the head of water above the seal). If the bond stress between the seal concrete and the piling is used to determine the seal thickness, the uplift capacity of the piles must be checked against the loads applied to them as a result of the bond stress. The bond between seal concrete and piles is typically assumed to be 10 psi. The minimum seal thickness is 1′-6″.

7.2 Foundation Modeling For Seismic Loads

7.2.1 General

Bridge modeling for seismic events shall be in accordance with requirements of the AASHTO Seismic Section 5, "Analytical Models and Procedures." The following guidance is for elastic dynamic analysis. Refer to AASHTO Seismic 5.4 for other dynamic analysis procedures.

The following sections were originally developed for a force-based seismic design as required in previous versions of the AASHTO LRFD Specifications. Modifications have been made to the following sections to incorporate the provisions of the new AASHTO Seismic Specifications. It is anticipated that this section will continue to be revised as more experience is gained through the application of the AASHTO Seismic Specifications.

7.2.2 Substructure Elastic Dynamic Analysis Procedure

The following is a general description of the iterative process used in an elastic dynamic analysis. ***Note:*** An elastic dynamic analysis is needed to determine the displacement demand, Δ_D. The substructure elements are first designed using Strength, Service or Extreme II limit state load cases prior to performing the dynamic analysis.

1. Build a Finite Element Model (FEM) to determine initial structure response (*EQ*+*DL*). Assume that foundation springs are located at the bottom of the column.

   A good initial assumption for fixity conditions of deep foundations (shafts or piles) is to add 10′ to the column length in stiff soils and 15′ to the column in soft soils.

   Use multi-mode response spectrum analysis to generate initial displacements.

2. Determine foundation springs using results from the seismic analysis in the longitudinal and transverse directions. ***Note:*** The load combinations specified in AASHTO Seismic 4.4 shall NOT be used in this analysis.

3. For spread footing foundations, the FEM will include foundation springs calculated based on the footing size as calculated in Section 7.2.7 of this manual. No iteration is required unless the footing size changes. ***Note:*** For Site Classes A and B the AASHTO Seismic Specification allows spread footings to be modeled as rigid or fixed.

4. For deep foundation analysis, the FEM and the soil response program must agree or converge on soil/structure lateral response. In other words, the moment, shear, deflection, and rotation of the two programs should be within 10%. More iteration will provide convergence much less than 1%. The iteration process to converge is as follows:

   a. Apply the initial FEM loads (moment and shear) to a soil response program such as DFSAP. DFSAP is a program that models Short, Intermediate or Long shafts or piles using the Strain Wedge Theory. See discussion below for options and applicability of DFSAP and Lpile soil response programs.

   b. Calculate foundation spring values for the FEM. ***Note:*** The load combinations specified in AASHTO Seismic 4.4 shall not be used to determine foundation springs.

   c. Re-run the seismic analysis using the foundation springs calculated from the soil response program. The structural response will change. Check to insure the FEM results (M, V, Δ, θ, and spring values) in the transverse and longitudinal direction are within 10% of the previous run. This check verifies the linear spring, or soil response (calculated by the FEM) is close to the predicted nonlinear soil behavior (calculated by the soil response program). If the results of the FEM and the soil response program differ by more than 10%, recalculate springs and repeat steps (a) thru (c) until the two programs converge to within 10%.

Special note for single column/single shaft configuration: The seismic design philosophy requires a plastic hinge in the substructure elements above ground (preferably in the columns). Designers should note the magnitude of shear and moment at the top of the shaft, if the column "zero" moment is close to a shaft head foundation spring, the FEM and soil response program will not converge and plastic hinging might be below grade.

Throughout the iteration process it is important to note that any set of springs developed are only applicable to the loading that was used to develop them (due to the inelastic behavior of the soil in the foundation program). This can be a problem when the forces used to develop the springs are from a seismic analysis that combines modal forces using a method such as the Complete Quadratic Combination (CQC) or other method. The forces that result from this combination are typically dominated by a single mode (in each direction as shown by mass participation). This results in the development of springs and forces that are relatively accurate for that structure. If the force combination (CQC or otherwise) is not dominated by one mode shape (in the same direction), the springs and forces that are developed during the above iteration process may not be accurate.

Guidelines for the use of DFSAP and Lpile programs:

- The DFSAP Program may be used for pile and shaft foundations for static soil structural analysis cases.
- The DFSAP Program may be used for pile and shaft foundations for liquefied soil structural analysis case of a shaft or pile foundation with static soil properties reduced by the Geotechnical Branch to account for effects of liquefaction. The Liquefaction option in either Lpile or DFSAP programs shall not be used (the liquefaction option shall be disabled). The Liquefied Sand soil type shall not be used in Lpile
- The Lpile Program may be used for a pile supported foundation group. Pile or shaft foundation group effect efficiency shall be taken as recommended in the project geotechnical report.

7.2.3 Bridge Model Section Properties

In general, gross section properties may be assumed for all FEM members, except concrete columns.

A. **Cracked Properties for Columns –** Effective section properties shall be in accordance with the AASHTO Seismic 5.6.

B. **Shaft Properties –** The moment of inertia for shafts shall be based on the gross section (I_g) or non-cracked. The shaft concrete strength and construction methods lead to significant variation in shaft stiffness described as follows.

For a stiff substructure response:

1. Use 1.5 f'_c to calculate the modulus of elasticity. Since aged concrete will generally reach a compressive strength of at least 6 ksi when using a design strength of 4 ksi, the factor of 1.5 is a reasonable estimate for an increase in stiffness.
2. Increase shaft I_g by increasing the shaft diameter by the amount allowed by the current ADSC/WSDOT Shaft Special Provision. Currently, the shaft special provisions allow contractors to increase the shaft diameter to accommodate metric casing. For shaft diameters of 5′ or less, the shaft diameter may be up to 1′ larger than that specified. For shaft diameters greater than 5′, the shaft diameter may be up to 6″ larger than that specified. Designers shall check the latest shaft special provisions to ensure no modifications to these allowable shaft diameters have changed.
3. In cases where stepped shaft construction is allowed, the specified increase in diameter shall be included in the bracketing of the response. See subsection 3.03.C of the current ADSC/WSDOT Shaft Special Provision for allowable increase in shaft diameter for stepped shafts with telescoping casing.

4. When permanent casing is specified, increase shaft I_g using the transformed area of a ¾″ thick casing. Since the contractor will determine the thickness of the casing, ¾″ is a conservative estimate for design.

For a soft substructure response:

1. Use 0.85 f'_c to calculate the modulus of elasticity. Since the quality of shaft concrete can be suspect when placed in water, the factor of 0.85 is an estimate for a decrease in stiffness.
2. Use shaft I_g.
3. When permanent casing is specified, increase shaft I_g using the transformed area of a ⅜″ thick casing.

   Since the contractor will determine the thickness of the casing, ⅜″ is a minimum estimated thickness for design.

C. Cast-in-Place Pile Properties

For a stiff substructure response:

1. Use 1.5 f'_c to calculate the modulus of elasticity. Since aged concrete will generally reach a compressive strength of at least 6 ksi when using a design strength of 4 ksi, the factor of 1.5 is a reasonable estimate for an increase in stiffness.
2. Use the pile I_g plus the transformed casing moment of inertia.
   Note: If DFSAP is used for analysis, the reinforcing and shell properties are input and the moment of inertia is computed internally.

$$I_{pile} = I_g + (n)(I_{shell}) + (n-1)\left(I_{reinf}\right) \qquad (7.2.3\text{-}1)$$

Where:

n = E_s/E_c

Use a steel casing thickness of ¼″ for piles less than 14″ in diameter, ⅜″ for piles 14″ to 18″ in diameter, and ½″ for larger piles.
Note: These casing thicknesses are to be used for analysis only, the contractor is responsible for selecting the casing thickness required to drive the piles.

For a soft substructure response:

1. Use 1.0 f'_c to calculate the modulus of elasticity.
2. Use pile I_g, neglecting casing properties.

7.2.4 Bridge Model Verification

As with any FEM, the designer should review the foundation behavior to ensure the foundation springs correctly imitate the known boundary conditions and soil properties. Watch out for mismatch of units.

All finite element models must have dead load static reactions verified and boundary conditions checked for errors. The static dead loads (*DL*) must be compared with hand calculations or another program's results. For example, span member end moment at the supports can be released at the piers to determine simple span reactions. Then hand calculated simple span *DL* or PGsuper *DL* and *LL* is used to verify the model.

Crossbeam behavior must be checked to ensure the superstructure *DL* is correctly distributing to substructure elements. A 3D bridge line model concentrates the superstructure mass and stresses to a point in the crossbeam. Generally, interior columns will have a much higher loading than the exterior columns. To improve the model, crossbeam I_g should be increased to provide the statically correct column *DL* reactions. This may require increasing I_g by about 1000 times. Many times this is not visible graphically and should be verified by checking numerical output. Note that most finite element programs

have the capability of assigning constraints to the crossbeam and superstructure to eliminate the need for increasing the I_g of the crossbeam.

Seismic analysis may also be verified by hand calculations. Hand calculated fundamental mode shape reactions will be approximate; but will ensure design forces are of the same magnitude.

Designers should note that additional mass might have to be added to the bridge FEM for seismic analysis. For example, traffic barrier mass and crossbeam mass beyond the last column at piers may contribute significant weight to a two-lane or ramp structure.

7.2.5 Deep Foundation Modeling Methods

A designer must assume a foundation support condition that best represents the foundation behavior. Deep foundation elements attempt to imitate the non-linear lateral behavior of several soil layers interacting with the deep foundation. The bridge FEM then uses the stiffness of the element to predict the seismic structural response. Models using linear elements that are not based on non-linear soil-structure interaction are generally considered inaccurate for soil response/element stress and are not acceptable. There are three methods used to model deep foundations (FHWA Report No. 1P-87-6). Of these three methods the Bridge and Structures Office prefers Method II for the majority of bridges.

A. **Method I – Equivalent Cantilever Column –** This method assumes a point of fixity some depth below the bottom of the column to model the stiffness of the foundation element. This shall only be used for a preliminary model of the substructure response in SDC C and D.

B. **Method II – Equivalent Base Springs –** This method models deep foundations by using a {6x6} matrix. There are two techniques used to generate the stiffness coefficients for the foundation matrix. The equivalent stiffness coefficients assessed are valid only at the given level of loading. Any changes of the shaft-head loads or conditions will require a new run for the program to determine the new values of the equivalent stiffness coefficients. These equivalent stiffness coefficients account for the nonlinear response of shaft materials and soil resistance.

   Technique I – The matrix is generated, using superposition, to reproduce the non-linear behavior of the soil and foundation at the maximum loading. With Technique I, 10 terms are produced, 4 of these terms are "cross couples." Soil response programs, such as Lpile or DFSAP, analyze the non-linear soil response. The results are then used to determine the equivalent base springs. See Appendix 7-B1 for more information.

   Technique II – The equivalent stiffness matrix generated using this technique uses only the diagonal elements (no cross coupling stiffnesses). The DFSAP program shall be used to develop the equivalent stiffness matrix. This technique is recommended be used to construct the foundation stiffness matrix (equivalent base springs).

   In Technique II the "cross couple" effects are internally accounted for as each stiffness element and displacement is a function of the given Lateral load (P) and Moment (M). Technique II uses the total response ($\Delta_{t(P,M)}$ $\theta_{t(P,M)}$) to determine displacement and equivalent soil stiffness, maintaining a nonlinear analysis. Technique I requires superposition by adding the individual responses due to the lateral load and moment to determine displacement and soil stiffness. Using superposition to combine two nonlinear responses results in errors in displacement and stiffness for the total response as seen in the Figure 7.2.5-1. As illustrated, the total response due to lateral load (P) and moment (M) does not necessarily equal the sum of the individual responses. For more details on the equivalent stiffness matrix, see the DFSAP reference manual.

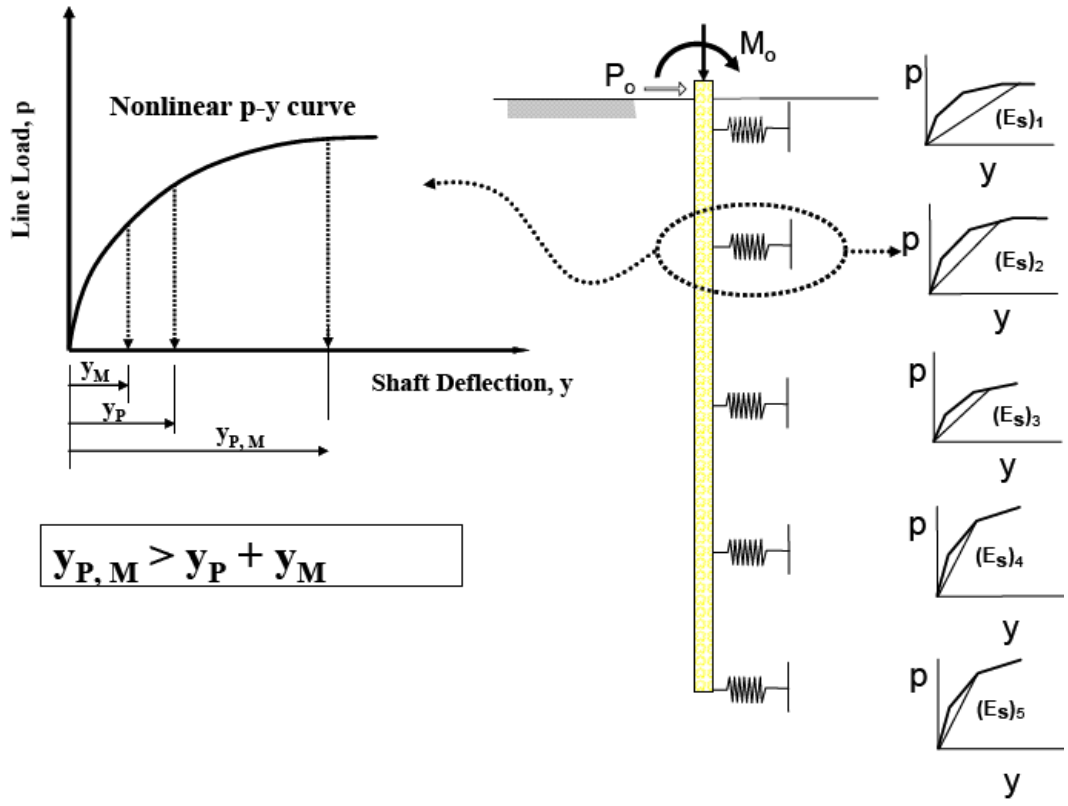

Limitations on the Technique I (Superposition Technique)
Figure 7.2.5-1

C. **Method III – Non-Linear Soil Springs –** This method attaches non-linear springs along the length of deep foundation members in a FEM model. See Appendix 7-B2 for more information. This method has the advantage of solving the superstructure and substructure seismic response simultaneously. The soil springs must be nonlinear PY curves and represent the soil/structure interaction. This cannot be done during response spectrum analysis with some FEM programs.

D. **Spring Location (Method II) –** The preferred location for a foundation spring is at the bottom of the column. This includes the column mass in the seismic analysis. For design, the column forces are provided by the FEM and the soil response program provides the foundation forces. Springs may be located at the top of the column. However, the seismic analysis will not include the mass of the columns. The advantage of this location is the soil/structure analysis includes both the column and foundation design forces.

   Designers should be careful to match the geometry of the FEM and soil response program. If the location of the foundation springs (or node) in the FEM does not match the location input to the soil response program, the two programs will not converge correctly.

E. **Boundary Conditions (Method II) –** To calculate spring coefficients, the designer must first identify the predicted shape, or direction of loading, of the foundation member where the spring is located in the bridge model. This will determine if one or a combination of two boundary conditions apply for the transverse and longitudinal directions of a support.

   A fixed head boundary condition occurs when the foundation element is in double curvature where translation without rotation is the dominant behavior. Stated in other terms, the shear causes deflection in the opposite direction of applied moment. This is a common assumption applied to both directions of a rectangular pile group in a pile supported footing.

A free head boundary condition is when the foundation element is in single curvature where translation and rotation is the dominant behavior. Stated in other terms, the shear causes deflection in the same direction as the applied moment. Most large diameter shaft designs will have a single curvature below ground line and require a free head assumption. The classic example of single curvature is a single column on a single shaft. In the transverse direction, this will act like a flagpole in the wind, or free head. What is not so obvious is the same shaft will also have single curvature in the longitudinal direction (below the ground line), even though the column exhibits some double curvature behavior. Likewise, in the transverse direction of multi-column piers, the columns will have double curvature (frame action). The shafts will generally have single curvature below grade and the free head boundary condition applies. The boundary condition for large shafts with springs placed at the ground line will be free head in most cases.

The key to determine the correct boundary condition is to resolve the correct sign of the moment and shear at the top of the shaft (or point of interest for the spring location). Since multi-mode results are always positive (CQC), this can be worked out by observing the seismic moment and shear diagrams for the structure. If the sign convention is still unclear, apply a unit load in a separate static FEM run to establish sign convention at the point of interest.

The correct boundary condition is critical to the seismic response analysis. For any type of soil and a given foundation loading, a fixed boundary condition will generally provide soil springs four to five times stiffer than a free head boundary condition.

F. **Spring Calculation (Method II) –** The first step to calculate a foundation spring is to determine the shear and moment in the structural member where the spring is to be applied in the FEM. Foundation spring coefficients should be based on the maximum shear and moment from the applied longitudinal OR transverse seismic loading. The combined load case (1.0*L* and 0.3*T*) shall be assumed for the design of structural members, and NOT applied to determine foundation response. For the simple case of a bridge with no skew, the longitudinal shear and moment are the result of the seismic longitudinal load, and the transverse components are ignored. This is somewhat unclear for highly skewed piers or curved structures with rotated springs, but the principle remains the same.

G. **Matrix Coordinate Systems (Method II) –** The Global coordinate systems used to demonstrate matrix theory are usually similar to the system defined for substructure loads in Section 7.1.3 of this manual, and is shown in Figure 7.2.5-2. This is also the default Global coordinate system of GTStrudl. This coordinate system applies to this Section to establish the sign convention for matrix terms. Note vertical axial load is labeled as *P*, and horizontal shear load is labeled as *V*.

Also note the default Global coordinate system in SAP 2000 uses *Z* as the vertical axis (gravity axis). When imputing spring values in SAP2000 the coefficients in the stiffness matrix will need to be adjusted accordingly. SAP2000 allows you to assign spring stiffness values to support joints. By default, only the diagonal terms of the stiffness matrix can be assigned, but when selecting the advanced option, terms to a symmetrical {6x6} matrix can be assigned.

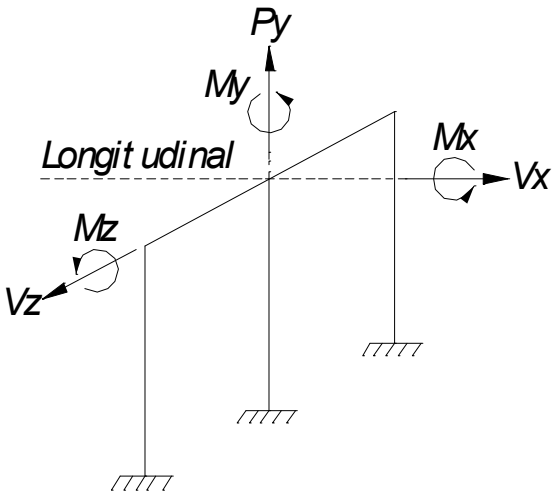

Global Coordinate System
Figure 7.2.5-2

H. **Matrix Coefficient Definitions (Method II) –** The stiffness matrix containing the spring values and using the standard coordinate system is shown in Figure 7.2.5-3. (Note that cross-couple terms generated using Technique I are omitted). For a description of the matrix generated using Technique I see Appendix 7-B1. The coefficients in the stiffness matrix are generally referred to using several different terms. Coefficients, spring or spring value are equivalent terms. Lateral springs are springs that resist lateral forces. Vertical springs resist vertical forces.

$$\begin{Bmatrix} & Vx & Py & Vz & Mx & My & Mz \\ Vx & K11 & 0 & 0 & 0 & 0 & 0 \\ Py & 0 & K22 & 0 & 0 & 0 & 0 \\ Vz & 0 & 0 & K33 & 0 & 0 & 0 \\ Mx & 0 & 0 & 0 & K44 & 0 & 0 \\ My & 0 & 0 & 0 & 0 & K55 & 0 \\ Mz & 0 & 0 & 0 & 0 & 0 & K66 \end{Bmatrix} \times \begin{Bmatrix} Disp. \\ \Delta x \\ \Delta y \\ \Delta z \\ \theta x \\ \theta y \\ \theta z \end{Bmatrix} = \begin{Bmatrix} Force \\ Vx \\ Py \\ Vz \\ Mx \\ My \\ Mz \end{Bmatrix}$$

Standard Global Matrix
Figure 7.2.5-3

Where the linear spring constants or K values are defined as follows, using the Global Coordinates:

K11 = Longitudinal Lateral Stiffness (kip/in)
K22 = Vertical or Axial Stiffness (kip/in)
K33 = Transverse Lateral Stiffness (kip/in)
K44 = Transverse Bending or Moment Stiffness (kip-in/rad)
K55 = Torsional Stiffness (kip-in/rad)
K66 = Longitudinal Bending or Moment Stiffness (kip-in/rad)

The linear lateral spring constants along the diagonal represent a point on a non-linear soil/structure response curve. The springs are only accurate for the applied loading and less accurate for other loadings. This is considered acceptable for Strength and Extreme Event design. For calculation of spring constants for Technique I see Appendix 7-B1. For calculation of spring constants for Technique II see the DFSAP reference manual.

I. **Group Effects –** When a foundation analysis uses Lpile or an analysis using PY relationships, group effects will require the geotechnical properties to be reduced before the spring values are calculated. The geotechnical report will provide transverse and longitudinal multipliers that are applied to the PY curves. This will reduce the pile resistance in a linear fashion. The reduction factors for lateral resistance due to the interaction of deep foundation members is provided in the WSDOT *Geotechnical Design Manual* M 46-03, Section 8.12.2.5.

   Group effect multipliers are not valid when the DFSAP program is used. Group effects are calculated internally using Strain Wedge Theory.

J. **Shaft Caps and Pile Footings –** Where pile supported footings or shaft caps are entirely below grade, their passive resistance should be utilized. In areas prone to scour or lateral spreading, their passive resistance should be neglected. DFSAP has the capability to account for passive resistance of footings and caps below ground.

7.2.6 Lateral Analysis of Piles and Shafts

7.2.6.1 Determination of Tip Elevations

Lateral analysis of piles and shafts involves determination of a shaft or pile tip location sufficient to resist lateral loads in both orthogonal directions. In many cases, the shaft or pile tip depth required to resist lateral loads may be deeper than that required for bearing or uplift. However, a good starting point for a tip elevation is the depth required for bearing or uplift. Another good "rule-of-thumb" starting point for shaft tips is an embedment depth of 6 diameters (6*D*) to 8 diameters (8*D*). Refer also to the geotechnical report minimum tip elevations provided by the geotechnical engineer.

A parametric study or analysis should be performed to evaluate the sensitivity of the depth of the shaft or pile to the displacement of the structure (i.e. the displacement of the shaft or pile head) in order to determine the depth required for stable, proportionate lateral response of the structure. Determination of shaft or pile tip location requires engineering judgment, and consideration should be given to the type of soil, the confidence in the soil data (proximity of soil borings) and the potential variability in the soil profile. Arbitrarily deepening shaft or pile tips may be conservative but can also have significant impact on constructability and cost.

The following is a suggested approach for determining appropriate shaft or pile tip elevations that are located in soils. Other considerations will need to be considered when shaft or pile tips are located in rock, such as the strength of the rock. This approach is based on the displacement demand seismic design procedures specified in the AASHTO Seismic Specifications.

1. Size columns and determine column reinforcement requirements for Strength and Service load cases.
2. Determine the column plastic over-strength moment and shear at the base of the column using the axial dead load and expected column material properties. A program such as Xtract or SAP2000 may be used to help compute these capacities. The plastic moments and shears are good initial loads to apply to a soil response program (DFSAP or Lpile). In some cases, Strength or other Extreme event loads may be a more appropriate load to apply in the lateral analysis. For example, in eastern Washington seismic demands are relatively low and elastic seismic or Strength demands may control.
3. Perform lateral analysis using the appropriate soil data from the Geotechnical report for the given shaft or pile location. If final soil data is not yet available, consult with the Geotechnical engineer for preliminary values to use for the site.

   Note: Early in the lateral analysis it is wise to obtain moment and shear demands in the shaft or pile and check that reasonable reinforcing ratios can be used to resist the demands. If not, consider resizing the foundation elements and restart the lateral analysis.

4. Develop a plot of embedment depth of shaft or pile versus lateral deflection of the top of shaft or pile. The minimum depth, or starting point, shall be the depth required for bearing or uplift or as specified by the geotechnical report. An example plot of an 8′ diameter shaft is shown in Figure 7.2.6-1 and illustrates the sensitivity of the lateral deflections versus embedment depth. Notice that at tip depths of approximately 50′ (roughly 6*D*) the shaft head deflections begin to increase substantially with small reductions in embedment depth. The plot also clearly illustrates that tip embedment below 70′ has no impact on the shaft head lateral deflection.

5. From the plot of embedment depth versus lateral deflection, choose the appropriate tip elevation. In the example plot in Figure 7.2.6-1, the engineer should consider a tip elevation to the left of the dashed vertical line drawn in the Figure. The final tip elevation would depend on the confidence in the soil data and the tolerance of the structural design displacement. For example, if the site is prone to variability in soil layers, the engineer should consider deepening the tip; say 1 to 3 diameters, to ensure that embedment into the desired soil layer is achieved. The tip elevation would also depend on the acceptable lateral displacement of the structure. To assess the potential variability in the soil layers, the geotechnical engineer assigned to the project should be consulted.

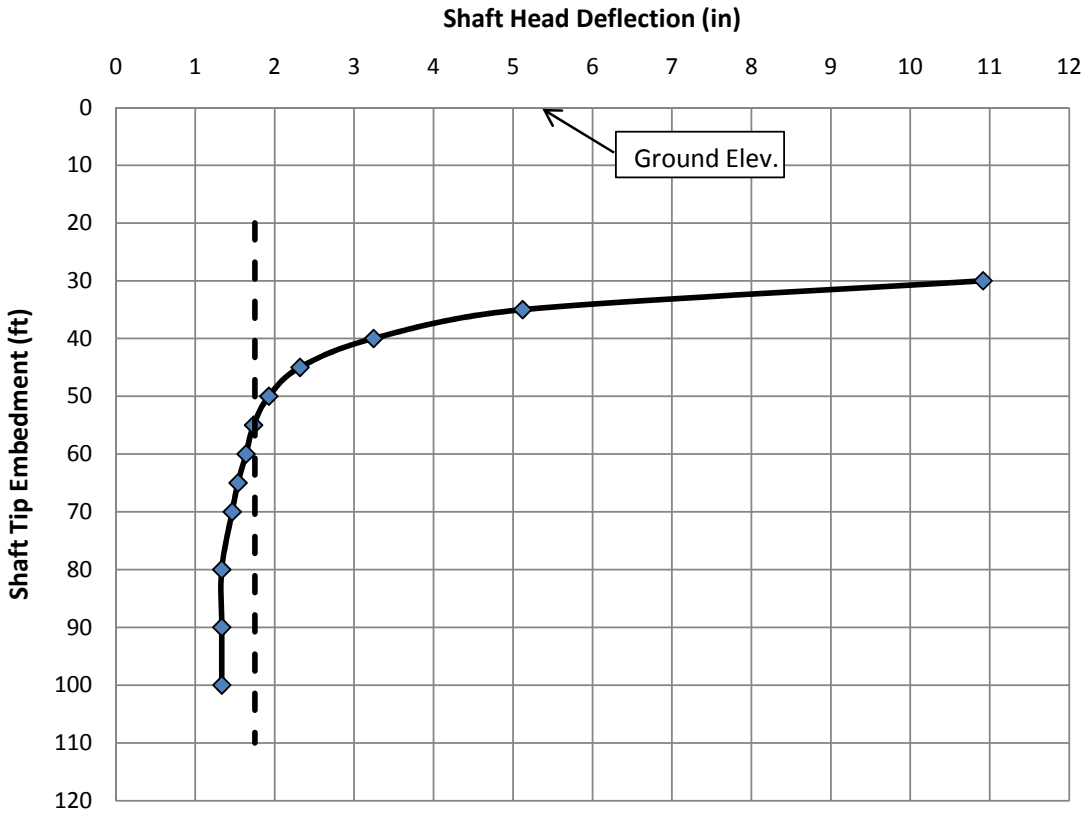

Shaft Tip Elevation vs Shaft Head Deflection
Figure 7.2.6-1

6. With the selected tip elevation, review the deflected shape of the shaft or pile, which can be plotted in DFSAP or Lpile. Examples are shown in Figure 7.2.6-2. Depending on the size and stiffness of the shaft or pile and the soil properties, a variety of deflected shapes are possible, ranging from a rigid body (fence post) type shape to a long slender deflected shape with 2 or more inflection points. Review the tip deflections to ensure they are reasonable, particularly with rigid body type deflected shapes. Any of the shapes in the Figure may be acceptable, but again it will depend on the lateral deflection the structure can tolerate.

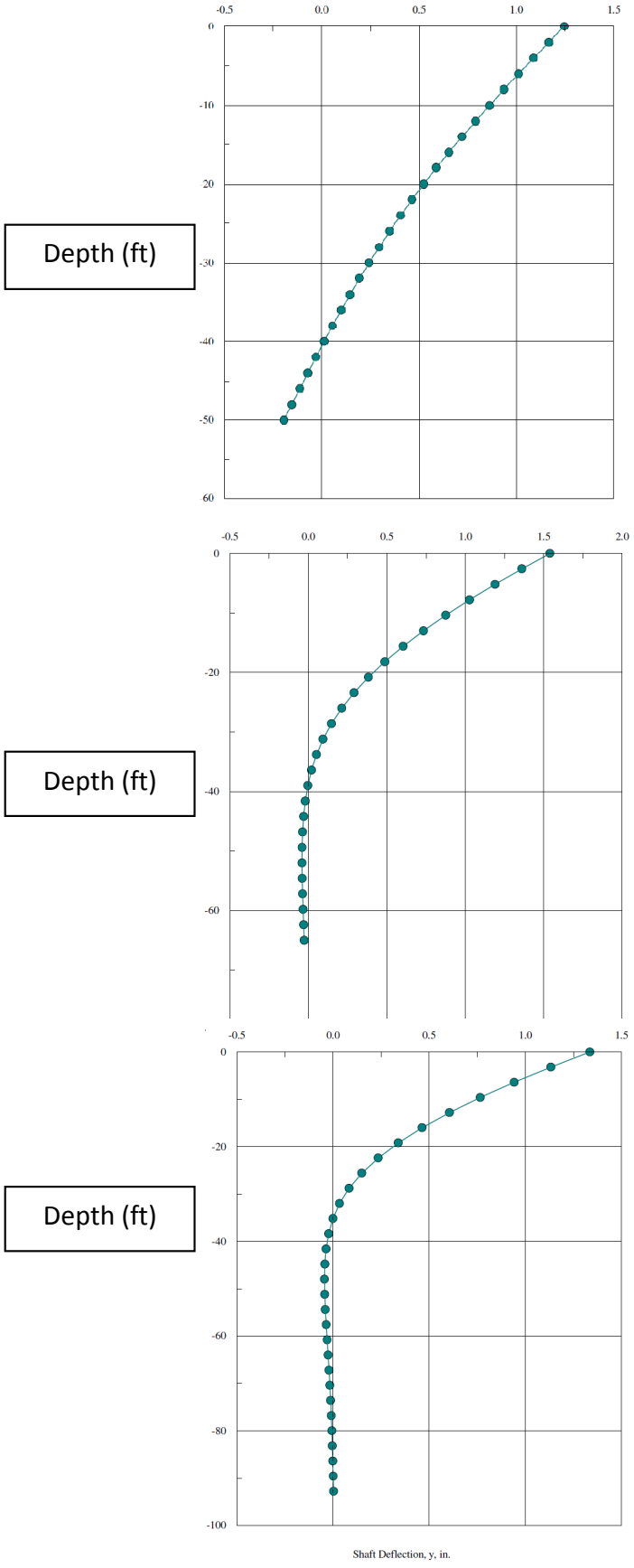

Various Shaft Deflected Shapes
Figure 7.2.6-2

The engineer will also need to consider whether liquefiable soils are present and/or if the shaft or pile is within a zone where significant scour can occur. In this case the analysis needs to be bracketed to envelope various scenarios. It is likely that a liquefiable or scour condition case may control deflection. In general, the WSDOT policy is to not include scour with Extreme Event I load combinations. In other words, full seismic demands or the plastic over-strength moment and shear, are generally not applied to the shaft or pile in a scoured condition. However, in some cases a portion of the anticipated scour will need to be included with the Extreme Event I load combination limit states. When scour is considered with the Extreme Event I limit state, the soil resistance up to a maximum of 25% of the scour depth for the design flood event (100 year) shall be deducted from the lateral analysis of the pile or shaft. In all cases where scour conditions are anticipated at the bridge site or specific pier locations, the geotechnical engineer and the Hydraulics Branch shall be consulted to help determine if scour conditions should be included with Extreme Event I limit states.

If liquefaction can occur, the bridge shall be analyzed using both the static and liquefied soil conditions. The analysis using the liquefied soils would typically yield the maximum bridge deflections and will likely control the required tip elevation, whereas the static soil conditions may control for strength design of the shaft or pile.

Lateral spreading is a special case of liquefied soils, in which lateral movement of the soil occurs adjacent to a shaft or pile located on or near a slope. Refer to the WSDOT *Geotechnical Design Manual* M 46-03 for discussion on lateral spreading. Lateral loads will need to be applied to the shaft or pile to account for lateral movement of the soil. There is much debate as to the timing of the lateral movement of the soil and whether horizontal loads from lateral spread should be combined with maximum seismic inertia loads from the structure. Most coupled analyses are 2*D*, and do not take credit for lateral flow around shafts, which can be quite conservative. The AASHTO Seismic Spec. permits these loads to be uncoupled; however, the geotechnical engineer shall be consulted for recommendations on the magnitude and combination of loads. See WSDOT *Geotechnical Design Manual* M 46-03 Sections 6.4.2.8 and 6.5.4.2 for additional guidance on combining loads when lateral spreading can occur.

7.2.6.2 Pile and Shaft Design for Lateral Loads

The previous section provides guidelines for establishing tip elevations for shafts and piles. Sensitivity analyses that incorporate both foundation and superstructure kinematics are often required to identify the soil conditions and loadings that will control the tip, especially if liquefied or scoured soil conditions are present. Several conditions will also need to be analyzed when designing the reinforcement for shafts and piles to ensure the controlling case is identified. All applicable strength, service and extreme load cases shall be applied to each condition. A list of these conditions includes, but is not limited to the following:

1. Static soil properties with both stiff and soft shaft or pile properties. Refer to Sections 7.2.3(B) and 7.2.3(C) for guidelines on computing stiff and soft shaft or pile properties.
2. Dynamic or degraded soil properties with both stiff and soft shaft or pile properties.
3. Liquefied soil properties with both stiff and soft shaft or pile properties.
    a. When lateral spreading is possible, an additional loading condition will need to be analyzed. The geotechnical engineer shall be consulted for guidance on the magnitude of seismic load to be applied in conjunction with lateral spreading loads. See WSDOT *Geotechnical Design Manual* M 46-03 Sections 6.4.2.8 and 6.5.4.2 for additional guidance on combining loads when lateral spreading can occur.
4. Scour condition with stiff and soft shaft or pile properties. The scour condition is typically not combined with Extreme Event I load combinations, however the designer shall consult with the Hydraulics Branch and geotechnical engineer for recommendations on load combinations. If scour is considered with the Extreme Event I limit state, the analysis should be conducted assuming that the soil in the upper 25% of the estimated scour depth for the design (100 year) scour event has been removed to determine the available soil resistance for the analysis of the pile or shaft.

Note: Often, the highest acceleration the bridge sees is in the first cycles of the earthquake, and degradation and/or liquefaction of the soil tends to occur toward the middle or end of the earthquake. Therefore, early in the earthquake, loads are high, soil-structure stiffness is high, and deflections are low. Later in the earthquake, the soil-structure stiffness is lower and deflections higher. This phenomenon is normally addressed by bracketing the analyses as discussed above.

However, in some cases a site specific procedure may be required to develop a site specific design response spectrum. A site specific procedure may result in a reduced design response spectrum when compared to the general method specified in the AASHTO Seismic 3.4. Section 3.4 requires the use of spectral response parameters determined using USGA/AASHTO Seismic Hazard Maps. The AASHTO Seismic Spec. limits the reduced site specific response spectrum to two-thirds of what is produced using the general method. Refer to the WSDOT *Geotechnical Design Manual* M 46-03 Chapter 6 for further discussion and consult the geotechnical engineer for guidance.

Refer to Section7.8 Drilled Shafts and Chapter 4 for additional guidance/requirements on design and detailing of drilled shafts and Section 7.9 Piles and Piling and Chapter 4 for additional guidance/ requirements on design and detailing of piles.

7.2.7 Spread Footing Modeling

For a first trial footing configuration, Strength column moments or column plastic hinging moments may be applied to generate footing dimensions. Soil spring constants are developed using the footing plan area, thickness, embedment depth, Poisson's ratio ν, and shear modulus G. The Geotechnical Branch will provide the appropriate Poisson's ratio and shear modulus. Spring constants for shallow rectangular footings are obtained using the following equations developed for rectangular footings. This method for calculating footing springs is referenced in ASCE 41-06, Section 4.4.2.1.2. (***Note:*** ASCE 41-06 was developed from FEMA 356.)

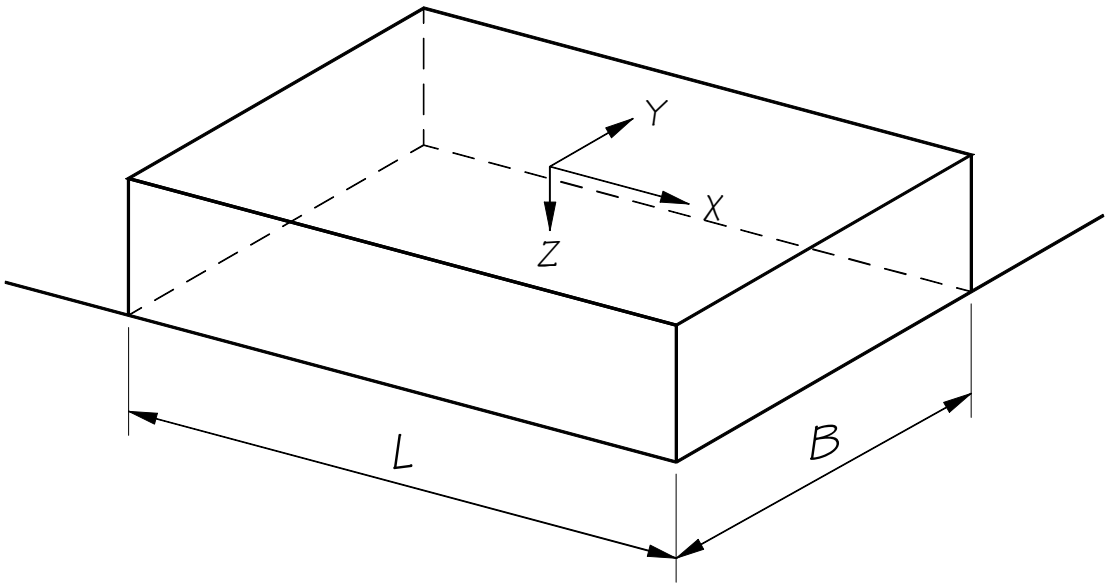

Orient axes such that $L > B$.
If $L = B$ use x-axis equations for both x-axis and y-axis.
Figure 7.2.7-1

Where:

K = βK_{sur}
K = Translation or rotational spring
K_{sur} = Stiffness of foundation at surface, see Table 7.2.7-1
β = Correction factor for embedment, see Table 7.2.7-2

Degree of Freedom	K_{sur}
Translation along x-axis	$\frac{GB}{2-v}\left[3.4\left(\frac{L}{B}\right)^{0.65}+1.2\right]$
Translation along y-axis	$\frac{GB}{2-v}\left[3.4\left(\frac{L}{B}\right)^{0.65}+0.4\frac{L}{B}+0.8\right]$
Translation along z-axis	$\frac{GB}{1-v}\left[1.55\left(\frac{L}{B}\right)^{0.75}+0.8\right]$
Rocking about x-axis	$\frac{GB^3}{1-v}\left[0.4\left(\frac{L}{B}\right)+0.1\right]$
Rocking about y-axis	$\frac{GB^3}{1-v}\left[0.47\left(\frac{L}{B}\right)^{2.4}+0.034\right]$
Torsion about z-axis	$GB^3\left[0.53\left(\frac{L}{B}\right)^{2.45}+0.51\right]$

Stiffness of Foundation at Surface

Table 7.2.7-1

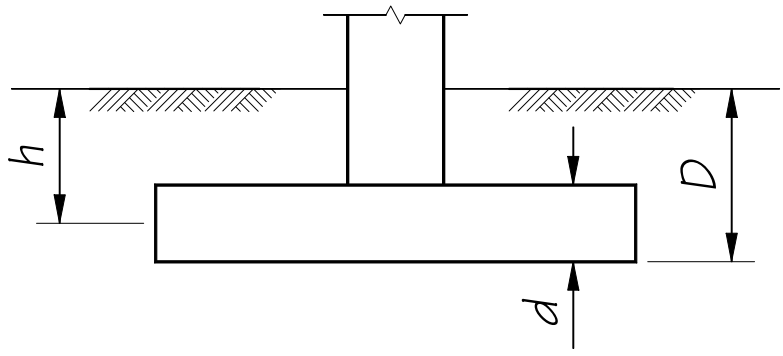

Where:

d = Height of effective sidewall contact (may be less than total foundation height if the foundation is exposed).

h = Depth to centroid of effective sidewall contact.

Figure 7.2.7-2

Degree of Freedom	β
Translation along x-axis	$\left(1+0.21\sqrt{\frac{D}{B}}\right)\left[1+1.6\left(\frac{hd(B+L)}{BL^2}\right)^{0.4}\right]$
Translation along y-axis	$\left(1+0.21\sqrt{\frac{D}{L}}\right)\left[1+1.6\left(\frac{hd(B+L)}{LB^2}\right)^{0.4}\right]$
Translation along z-axis	$\left[1+\frac{1}{21}\frac{D}{B}\left(2+2.6\frac{B}{L}\right)\right]\cdot\left[1+0.32\left(\frac{d(B+L)}{BL}\right)^{\frac{2}{3}}\right]$
Rocking about x-axis	$1+2.5\frac{d}{B}\left[1+\frac{2d}{B}\left(\frac{d}{D}\right)^{-0.2}\sqrt{\frac{B}{L}}\right]$
Rocking about y-axis	$1+1.4\left(\frac{d}{L}\right)^{0.6}\left[1.5+3.7\left(\frac{d}{L}\right)^{1.9}\left(\frac{d}{D}\right)^{-0.6}\right]$
Torsion about z-axis	$1+2.6\left(1+\frac{B}{L}\right)\left(\frac{d}{B}\right)^{0.9}$

Correction Factor for Embedment
Table 7.2.7-2

7.3 Column Design

7.3.1 Preliminary Plan Stage

The preliminary plan stage determines the initial column size, column spacing, and bridge span length based on a preliminary analysis. Columns are spaced to give maximum structural benefit except where aesthetic considerations dictate otherwise. Piers normally are spaced to meet the geometric and aesthetic requirements of the site and to give maximum economy for the total structure. Good preliminary engineering judgment results in maximum economy for the total structure.

The designer may make changes after the preliminary plan stage. The design unit supervisor will need to review all changes, and if the changes are more than minor dimension adjustments, the Bridge Projects Engineer and the State Bridge and Structures Architect will also need to be involved in the review.

Tall piers spaced farther apart aesthetically justify longer spans. Difficult and expensive foundation conditions will also justify longer spans. Span lengths may change in the design stage if substantial structural improvement and/or cost savings can be realized. The designer should discuss the possibilities of span lengths or skew with the supervisor as soon as possible. Changes in pier spacing at this stage can have significant negative impacts to the geotechnical investigation.

Column spacing should minimize column dead load moments. Multiple columns are better suited for handling lateral loads due to wind and/or earthquake. The designer may alter column size or spacing for structural reasons or change from a single-column pier to a multicolumn pier.

7.3.2 General Column Criteria

Columns should be designed so that construction is as simple and repetitious as possible. The diameter of circular columns should be a multiple of one foot, however increments of 6″ may be appropriate in some cases. Rectangular sections shall have lengths and widths that are multiples of 3″. Long rectangular columns are often tapered to reduce the amount of column reinforcement required for strength. Tapers should be linear for ease of construction.

Understanding the effects on long columns due to applied loads is fundamental in their design. Loads applied to the columns consist of reactions from loads applied to the superstructure and loads applied directly to the columns. For long columns, it may be advantageous to reduce the amount of reinforcement as the applied loads decrease along the column. In these cases, load combinations need to be generated at the locations where the reinforcement is reduced.

A. **Construction Joints –** Bridge plans shall show column construction joints at the top of footing or pedestal and at the bottom of crossbeam. Optional construction joints with roughened surfaces should be provided at approximately 30′ vertical spacing.

B. **Modes of Failure –** A column subject to axial load and moment can fail in several modes. A “short” column can fail due to crushing of the concrete or to failure of the tensile reinforcement. A “long” column can fail due to elastic buckling even though, in the initial stages, stresses are well within the normal allowable range. Long column failure is normally a combination of stability and strength failure that might occur in the following sequence:

   1. Axial load is applied to the column.
   2. Bending moments are applied to the column, causing an eccentric deflection.
   3. Axial loads act eccentrically to the new column center line producing *P*-Δ moments which add directly to the applied moments.
   4. *P*-Δ moments increase the deflection of the column and lead to more eccentricity and moments.
   5. The *P*-Δ analysis must prove the column loading and deflection converges to a state where column stresses are acceptable. Otherwise, the column is not stable and failure can be catastrophic. Refer to AASHTO Seismic 4.11.5 for discussion on *P*-Δ effects and when they shall be considered in the design. In most cases *P*-Δ effects can be neglected.

Unlike building columns, bridge columns are required to resist lateral loads through bending and shear. As a result, these columns may be required to resist relatively large applied moments while carrying nominal axial loads. In addition, columns are often shaped for appearance. This results in complicating the analysis problem with non-prismatic sections.

7.3.3 Column Design Flow Chart – Evaluation of Slenderness Effects

Figure 7.3.3-1 illustrates the basic steps in the column design process for evaluating the effects of slenderness on columns and methods for computing magnification of moments on columns.

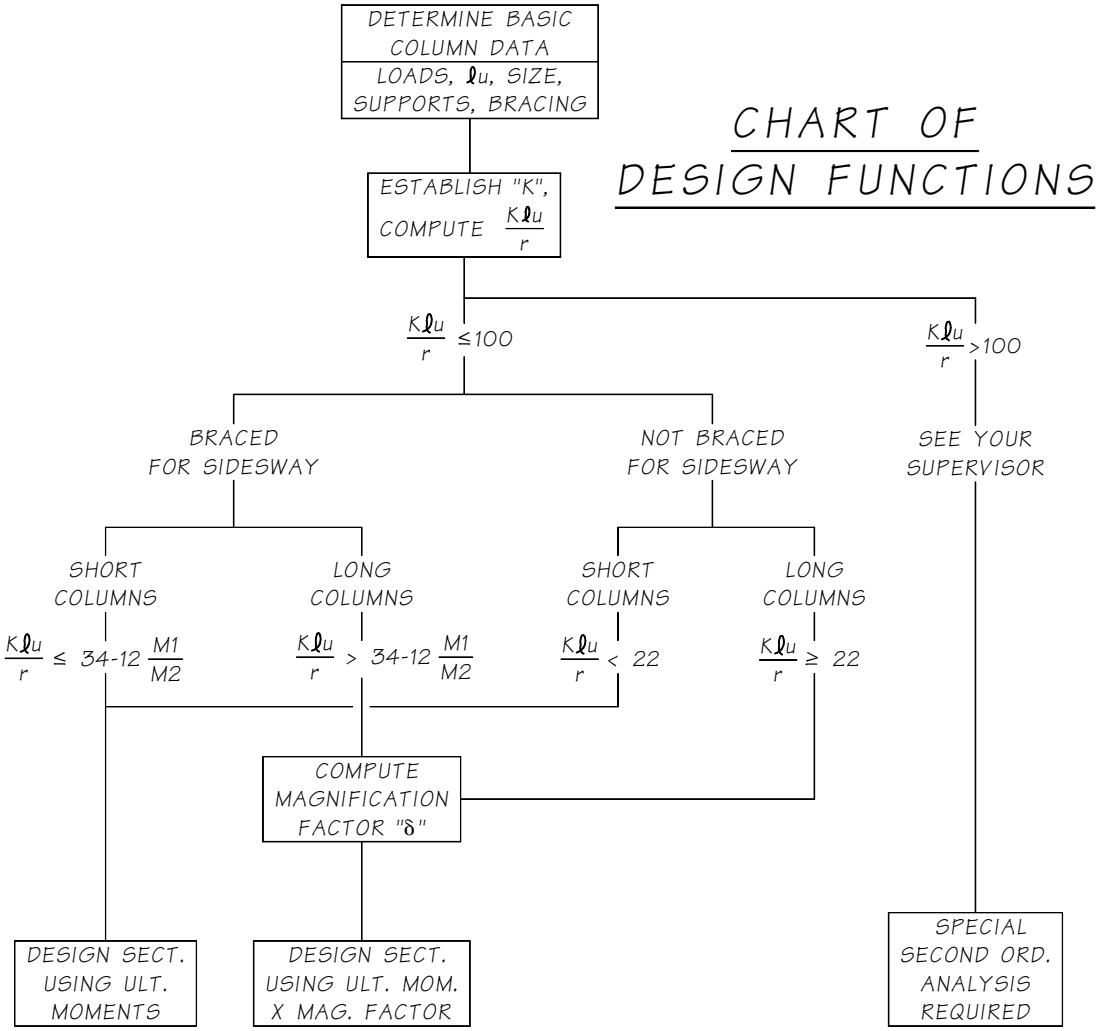

Column Design Flow Chart for Non-Seismic Design
Figure 7.3.3-1

7.3.4 Slenderness Effects

This section supplements and clarifies AASHTO LRFD specifications. The goal of a slenderness analysis is to estimate the additional bending moments in the columns that are developed due to axial loads acting upon a deflected structure. Two primary analysis methods exist: the moment magnifier method and the second-order analysis. The designer must decide which method to use based upon the slenderness ratio (kLu/r) of the column(s).

Method 1: Allowed if $kLu/r < 100$. Section 7.3.5 of this manual discusses the approximate moment magnifier method that is generally more conservative and easier to apply.

Method 2: Recommended by AASHTO LRFD for all situations and is mandatory for $kLu/r > 100$. Section 7.3.6 of this manual discusses a second-order structural analysis that accounts directly for the axial forces and can lead to significant economy in the final structure.

In general, tall thin columns and piles above ground (pile bents) are considered unbraced and larger short columns are considered braced.

A. **Braced or Unbraced Columns –** In a member with loads applied at the joints, any significant deflection "sideways" indicated the member is unbraced. The usual practice is to consider the pier columns as unbraced in the transverse direction. The superstructure engages girder stops at the abutment and resists lateral sidesway due to axial loads. However, pier lateral deflections are significant and are considered unbraced. Short spanned bridges may be an exception.

   Most bridge designs provide longitudinal expansion bearings at the end piers. Intermediate columns are considered unbraced because they must resist the longitudinal loading. The only time a column is braced in the longitudinal direction is when a framed bracing member does not let the column displace more than $L/1500$. L is the total column length. In this case, the bracing member must be designed to take all of the horizontal forces.

7.3.5 Moment Magnification Method

The moment magnification method is described in AASHTO LRFD 4.5.3.2.2. The following information is required.

- Column geometry and properties: E, I, Lu, and k.
- All Strength loads obtained from conventional elastic analyses using appropriate stiffness and fixity assumptions and column under strength factor (ϕ).

Computations of effective length factors, k, and buckling loads, Pc, are not required for a second-order analysis, though they may be helpful in establishing the need for such an analysis. In general, if magnification factors computed using the AASHTO LRFD specifications are found to exceed about 1.4, then a second-order analysis may yield substantial benefits.

7.3.6 Second-Order Analysis

A second-order analysis that includes the influence of axial loads on the deflected structure is required under certain circumstances, and may be advisable in others. It can lead to substantial economy in the final design of many structures. The designer should discuss the situation with the supervisor before proceeding with the analysis. The ACI Building Code (ACI 318-08), should be consulted when carrying out a second-order analysis.

For columns framed together, the entire frame should be analyzed as a unit. Analyzing individual columns result in overly conservative designs for some columns and non-conservative results for others. This is a result of redistribution of the lateral loads in response to the reduced stiffness of the compression members. For example, in a bridge with long, flexible columns and with short, stiff columns both integrally connected to a continuous superstructure, the stiff columns will tend to take a larger proportion of the lateral loading as additional sidesway under axial loads occurs.

A. **Design Methods for a Second-Order Analysis –** The preferred method for performing a second-order analysis of an entire frame or isolated single columns is to use a nonlinear finite element program, such as GTSTRUDL, with appropriate stiffness and restraint assumptions. The factored group loads are applied to the frame, including the self-weight of the columns. The model is then analyzed using the nonlinear option available in GTSTRUDL. The final design moments are obtained directly from the analysis.

   PΔ moments are added to the applied moments using an iterative process until stability is reached. The deflections should converge within 5% of the total deflection. Analysis must include the effect of the column weight; therefore, the axial dead load must be adjusted as follows:

$$P_u = P_u + {}^1\!/_3\,(factored\ column\ weight) \qquad (7.3.6\text{-}1)$$

B. **Applying Factored Loads –** For a second-order analysis, loads are applied to the structure and the analysis results in member forces and deflections. It must be recognized that a second-order analysis is non-linear and the commonly assumed principle of superposition may not be applicable. The loads applied to the structure should be the entire set of factored loads for the load group under consideration. The analysis must be repeated for each group load of interest. The problem is complicated by the fact that it is often difficult to predict in advance which load groups will govern.

   For certain loadings, column moments are sensitive to the stiffness assumptions used in the analysis. For example, loads developed as a result of thermal deformations within a structure may change significantly with changes in column, beam, and foundation stiffness. Accordingly, upper and lower bounds on the stiffness should be determined and the analysis repeated using both sets to verify the governing load has been identified.

C. **Member Properties –** As with a conventional linear elastic frame analysis, various assumptions and simplifications must be made concerning member stiffness, connectivity, and foundation restraint. Care must be taken to use conservative values for the slenderness analysis. Reinforcement, cracking, load duration, and their variation along the members are difficult to model while foundation restraint will be modeled using soil springs.

7.3.7 Shear Design

Shear design should follow the "Simplified Procedure for Nonprestressed Sections" in AASHTO LRFD 5.8.3.4.1.

7.4 Column Reinforcement

7.4.1 Reinforcing Bar Material

In accordance with *Standard Specification* Section 9-07.2, steel reinforcing bars for all bridge substructure elements (precast and cast-in-place) shall be ASTM A 706 only. ASTM A 706 specifications were developed for seismic applications and place limits on yield and tensile strengths. Also, chemistry is controlled to facilitate welding.

ASTM A 706 is available in sizes from #4 to #18 in straight bars and #3 to #6 in spirals.

7.4.2 Longitudinal Reinforcement Ratio

The reinforcement ratio is the steel area divided by the gross area of the section (A_s/A_g). The maximum reinforcement ratio shall be 0.04 in SDCs A, B, C and D. The minimum reinforcement ratio shall be 0.007 for SDC A, B, and C and shall be 0.01 for SDC D.

For bridges in SDC A, if oversized columns are used for architectural reasons, the minimum reinforcement ratio of the gross section may be reduced to 0.005, provided all loads can be carried on a reduced section with similar shape and the reinforcement ratio of the reduced section is equal to or greater than 0.01 and $0.133f'_c/f_y$. The column dimensions are to be reduced by the same ratio to obtain the similar shape.

7.4.3 Longitudinal Splices

In general, column longitudinal reinforcement shall not be spliced at points of maximum moment, plastic hinge locations, or in columns less than 30 feet long between the top of footing, or shaft, and the bottom of crossbeam. The bridge plans must show lap splice location, length, and optional mechanical splice locations. *Standard Specification* Section 6-02.3(24)F covers requirements for mechanical splices.

Column longitudinal reinforcement splices shall be staggered. For column intermediate construction joints, the shortest staggered lap bar shall project above the joint 60 bar diameters or minimum of 24″ or 20 bar diameters for welded or mechanical splices. Figure 7.4.3-1 shows the standard practice for staggered splice locations.

For bridges in SDCs A through D, splices of #11 and smaller bars may use lap slices. When space is limited, #11 and smaller bars can use welded splices, an approved mechanical butt splice, or the top bar can be bent inward (deformed by double bending) to lie inside and parallel to the bars below. When the bar size exceeds #11, a welded splice or an approved mechanical butt splice is required. The smaller bars in the splice determine the type of splice required.

Mechanical splices shall meet requirements of the *Standard Specifications* Section 6-02.3(24)F and "Ultimate Splice" strain requirements provided in AASHTO LRFD Table C5.10.11.41f-1.

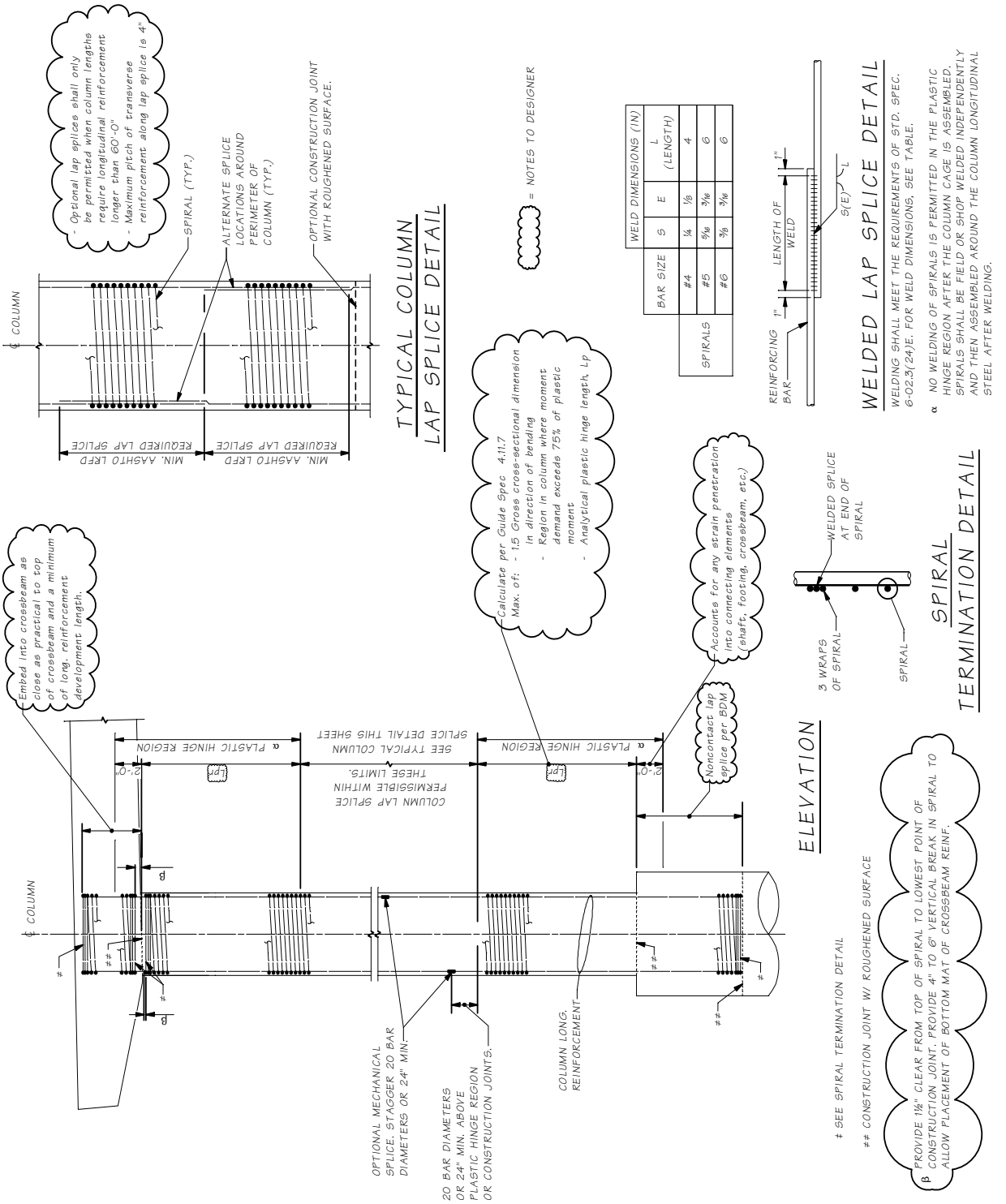

Column Splice and Plastic Hinge Region Details
Figure 7.4.3-1

7.4.4 Longitudinal Development

A. **Crossbeams –** Development of longitudinal reinforcement shall be in accordance with AASHTO Seismic 8.8.4.

A detail showing horizontal lower crossbeam reinforcement and vertical column reinforcement is preferred but not required.

B. **Footings –** Longitudinal reinforcement at the bottom of a column should extend into the footing and rest on the bottom mat of footing reinforcement with standard 90° hooks. In addition, development of longitudinal reinforcement shall be in accordance with AASHTO Seismic 8.8.4 and AASHTO LRFD 5.11.2.1.

C. **Drilled Shafts –** Column longitudinal reinforcement in drilled shafts is typically straight. Embedment shall be a minimum length equal to $l_{ns} = l_s + s$ (per TRAC Report WA-RD 417.1 titled "Noncontact Lap Splices in Bridge Column-Shaft Connections").

Where:

l_s = the larger of $1.7 \times l_{ac}$ or $1.7 \times l_d$ (for Class C lap splice) where:
l_{ac} = development length from the Seismic Guide Spec. 8.8.4 for the column longitudinal reinforcement.
l_d = tension development length from AASHTO LRFD Section 5.11.2.1 for the column longitudinal reinforcement.
s = distance between the shaft and column longitudinal reinforcement

The requirements of the AASHTO Seismic 8.8.10 for development length of column bars extended into oversized pile shafts for SDC C and D shall not be used.

All applicable modification factors for development length, except one, in AASHTO LRFD 5.11.2 may be used when calculating l_d. The modification factor in 5.11.2.1.3 that allows l_d to be decreased by the ratio of (A_s required)/(A_s provided), shall not be used. Using this modification factor would imply that the reinforcement does not need to yield to carry the ultimate design load. This may be true in other areas. However, our shaft/column connections are designed to form a plastic hinge, and therefore the reinforcement shall have adequate development length to allow the bars to yield.

See Figure 7.4.4-1 for an example of longitudinal development into drilled shafts.

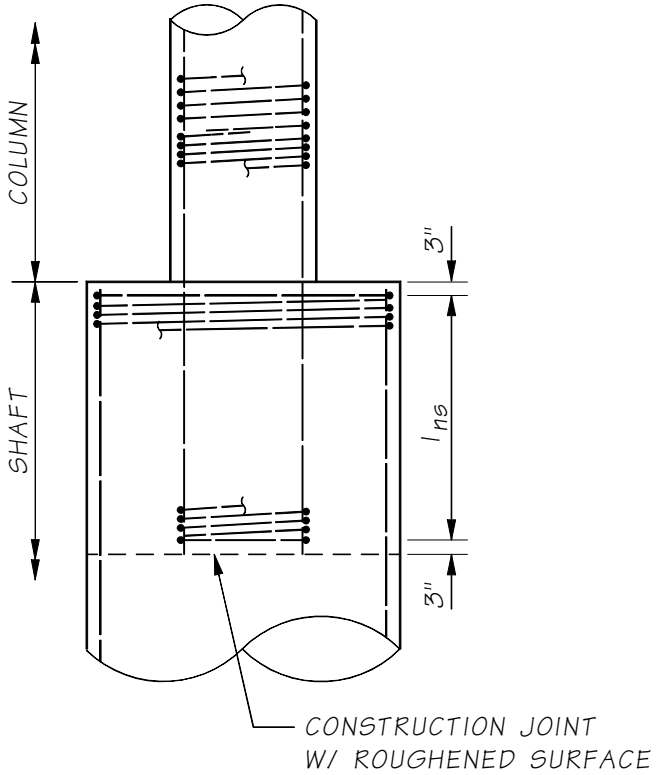

Longitudinal Development Into Drilled Shafts
Figure 7.4.4-1

7.4.5 Transverse Reinforcement

A. **General –** All transverse reinforcement in columns shall be deformed. Although allowed in the AASHTO LRFD Specification, plain bars or plain wire may not be used for transverse reinforcement.

Columns in SDC B, C, and D shall use spiral or circular hoop transverse confinement reinforcement where possible, although rectangular hoops with ties may be used when large, odd shaped column sections are required. Spirals are the preferred confinement reinforcement and shall be used whenever a #6 spiral is sufficient to satisfy demands. When demands require reinforcement bars greater than #6, circular hoops of #7 through # 9 may be used. Bundled spirals shall not be used for columns or shafts.

Circular hoops for columns shall be shop fabricated using a manual direct butt weld, resistance butt weld, or mechanical coupler. Currently a Bridge Special Provision has been developed to cover the fabrication requirements of hoops for columns and shafts, which may eventually be included in the *Standard Specifications*. Manual direct butt welded hoops require radiographic nondestructive examination (RT), which may result in this option being cost prohibitive at large quantities. Resistance butt welded hoops are currently available from Caltrans approved fabricators in California and have costs that are comparable to welded lap splices. Fabricators in Washington State are currently evaluating resistance butt welding equipment. Mechanical couplers may be considered provided cover and clearance requirements are accounted for in the column details.

When welded hoops or mechanical couplers are used, the plans shall show a staggered pattern around the perimeter of the column so that no two adjacent welded splices or couplers are located at the same location. Also, where interlocking hoops are used in rectangular or non-circular columns, the splices shall be located in the column interior.

Columns in SDC A may use spirals, circular hoops, or rectangular hoops and crossties. Figures 7.4.5-1 and 7.4.5-2 show transverse reinforcement details for rectangular columns in high and low seismic zones, respectively.

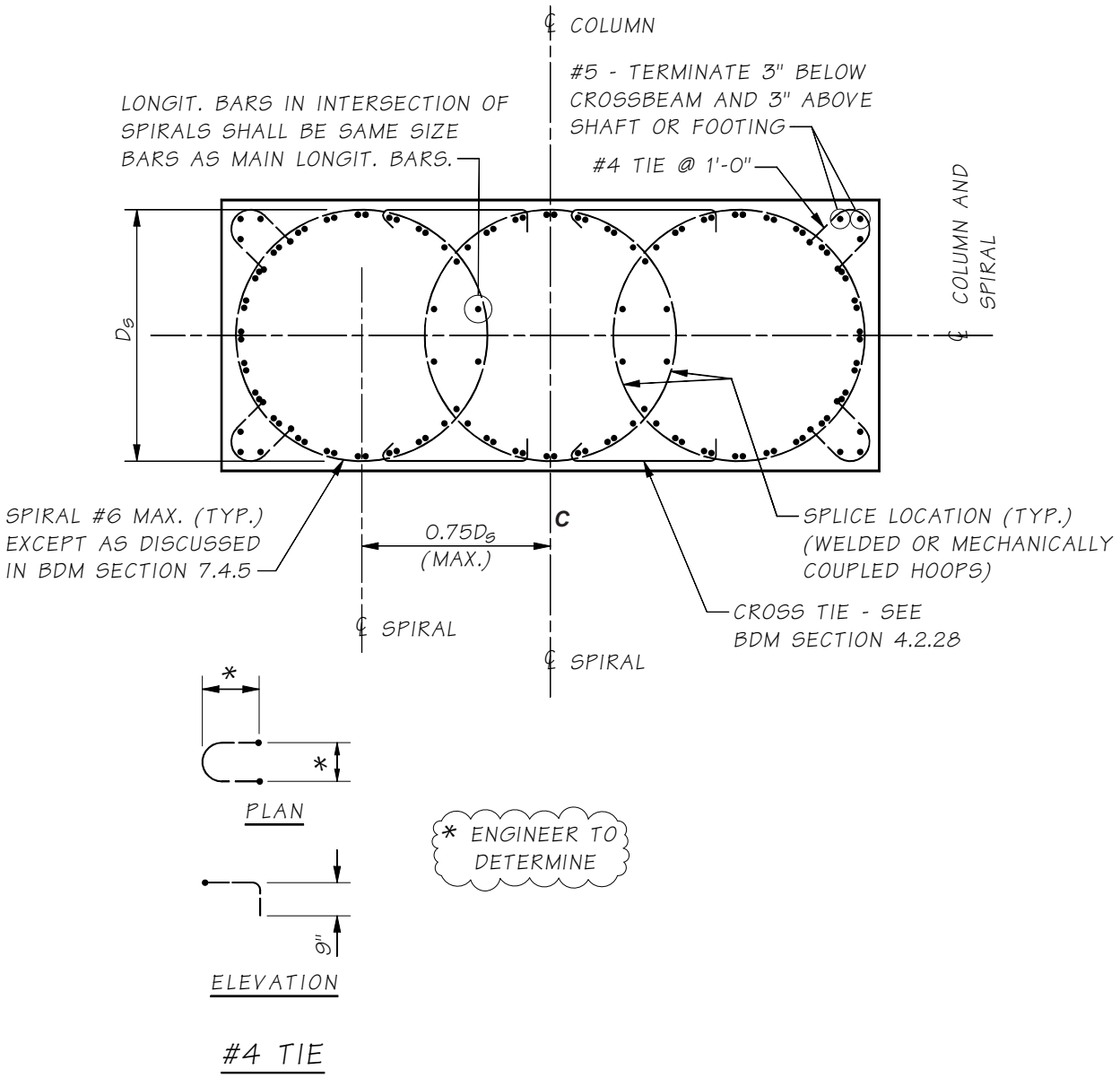

Constant and Tapered Rectanglar Solum Section SDCs C and D
Figure 7.4.5-1

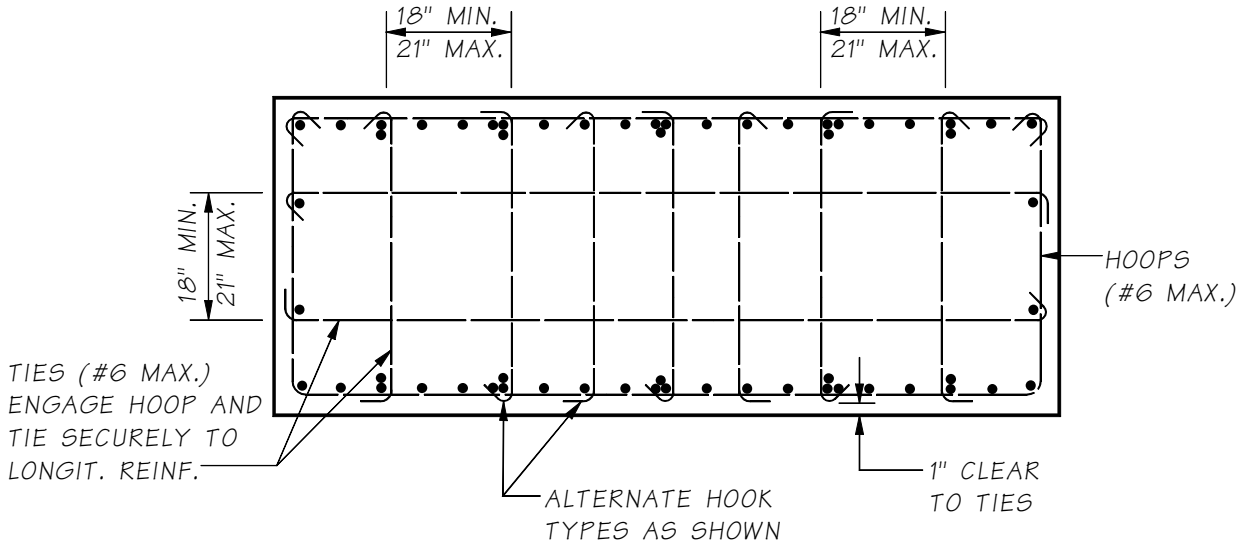

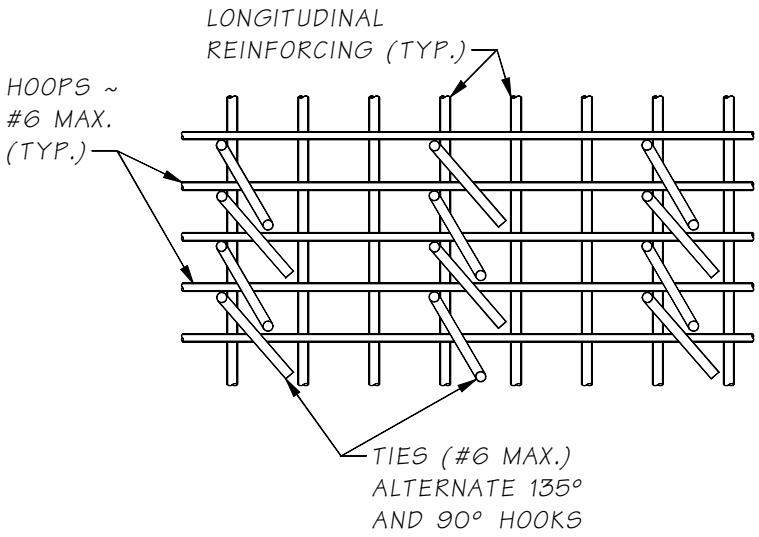

Constant and Tapered Rectangular Column Section SDCs A and B
Figure 7.4.5-2

B. **Spiral Splices and Hoops –** Welded laps shall be used for splicing and terminating spirals, up to bar size #6, and shall conform to the details shown in Figure 7.4.5-3. Only single sided welds shall be used, which is the preferred method in construction. Avoid bundled spirals where both bars are required to terminate at the same location (four bars stacked at the lap weld.) Note: Lap splices for spirals are currently acceptable under the AWS D1.4 up to bar size #6. Recent testing has been performed by WSDOT for bar sizes #7 through #9. All tests achieved full tensile capacity (including 125% of yield strength.) Therefore, #7 through #9 lap splice welded hoops are acceptable to use provided they are not located in plastic hinge regions. Butt-welded hoops or spirals are required by AASHTO Seismic 8.8.7 for plastic hinge zones of columns designed to achieve a displacement ductility demand greater than 4. Also, mixing of spirals and hoops within the same column is not permitted by the AASHTO Seismic Specification.

Field welded lap splices of any size bar are not permitted in the plastic hinge region and should be clearly designated on the contract plans. If spirals are welded while in place around longitudinal steel reinforcement, there is a chance that an arc can occur between the spiral and longitudinal bar. The arc can create a notch that can act as a stress riser and may cause premature failure of the longitudinal bar when stressed beyond yield. Note – it would acceptable to field weld lap splices of spirals off to the side of the column and then slide into place over the longitudinal reinforcement.

Although hooked lap splices are structurally acceptable, and permissible by AASHTO LRFD specification for spirals or circular hoops, they shall not be allowed due to construction challenges. While casting concrete, tremies get caught in the protruding hooks, making accessibility to all areas and its withdrawal cumbersome. It is also extremely difficult to bend the hooks through the column cage into the core of the column.

When rectangular hoops with ties are used, consideration shall be given to column constructability. Such considerations can include, but are not limited to a minimum of 2′-6″ by 3′-0″ open rectangle to allow access for the tremie tube and construction workers for concrete placement, inform access hatches, and/or external vibrating.

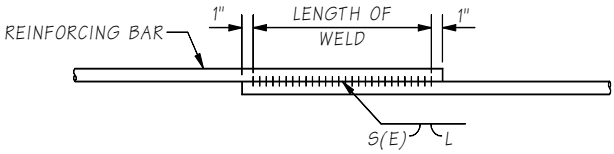

WELDED LAP SPLICE DETAIL

WELDED LAP SPLICE IS SUITABLE FOR SPIRALS IN COLUMNS AND SHAFTS UP TO BAR SIZE #6. LAP SPLICE FOR BAR SIZES #7 TO #9 ARE ONLY INTENDED FOR SHAFT HOOPS. WELDING SHALL MEET THE REQUIREMENTS OF STD. SPEC. 6-02.3(24)E. FOR WELD DIMENSIONS, SEE TABLE BELOW.

		WELD DIMENSIONS (IN)		
	BAR SIZE	S	E	L (LENGTH)
SPIRALS	#4	¼	⅛	4
	#5	5/16	3/16	6
	#6	⅜	3/16	6
HOOPS FOR SHAFTS	#7	7/16	¼	7
	#8	½	¼	8
	#9	9/16	5/16	8

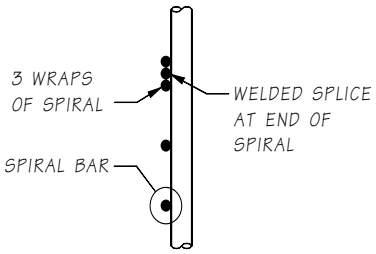

SPIRAL TERMINATION DETAIL

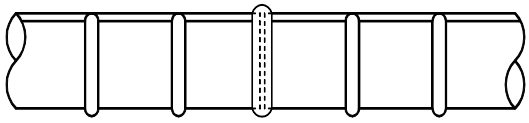

RESISTANCE BUTT JOINT DETAIL

SEE SPECIAL PROVISIONS FOR APPROVAL AND TESTING REQUIRMENTS

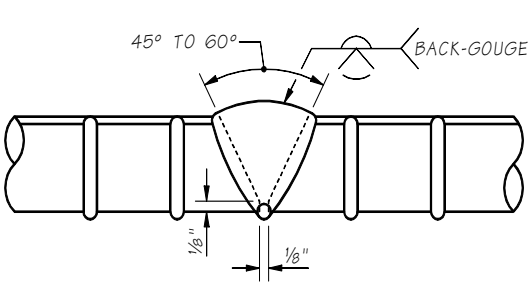

SINGLE V-GROOVE WELD
AWS D1.4 FIGURE 3.2(A)

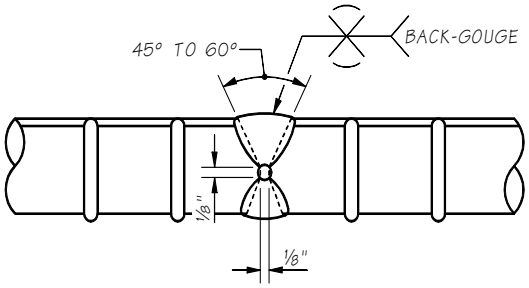

DOUBLE V-GROOVE WELD
AWS D1.4 FIGURE 3.2(B)

MANUAL DIRECT BUTT JOINT DETAILS

ALL BACKING SHALL BE REMOVED.
SEE SPECIAL PROVISIONS FOR RT TESTING FREQUENCY

Welded Spiral Splice and Butt Splice Details
Figure 7.4.5-3

7.4.6 Hinge Diaphragms

Hinge diaphragms of the type shown in Figure 7.4.6-1 were built on past WSDOT bridges. Typically they were used above a crossbeam or wall pier. These types of hinges are suitable when widening an existing bridge crossbeam or wall pier with this type of detail.

The area of the hinge bars in square inches is as follows:

$$A_s = \frac{\frac{(P_u)}{2} + \left[P_u^2 + V_u^2\right]^{1/2}}{.85\, F_y \cos\theta} \qquad (7.4.6\text{-}1)$$

Where:

P_u is the factored axial load
V_u is the factored shear load
F_y is the reinforcing yield strength (60 ksi)
θ is the angle of the hinge bar to the vertical

The development length required for the hinge bars is 1.25 l_d. All applicable modification factors for development length in AASHTO LRFD 5.11.2 may be used when calculating l_d. Tie and spiral spacing shall conform to AASHTO LRFD confinement and shear requirements. Ties and spirals shall not be spaced more than 12″ (6″ if longitudinal bars are bundled). Premolded joint filler should be used to assure the required rotational capacity. There should also be a shear key at the hinge bar location.

When the hinge reinforcement is bent, additional confinement reinforcing may be necessary to take the horizontal component from the bent hinge bars. The maximum spacing of confinement reinforcing for the hinge is the smaller of that required above and the following:

$$S_{max} = \frac{A_v\, F_y}{\left[\frac{P_u \tan\theta}{.85\, l_h} + \frac{V_s}{d}\right]} \qquad (7.4.6\text{-}2)$$

Where:

A_v, V_s, and d are as defined in AASHTO Article “Notations”
l_h is the distance from the hinge to where the bend begins

Continue this spacing one-quarter of the column width (in the plane perpendicular to the hinge) past the bend in the hinge bars.

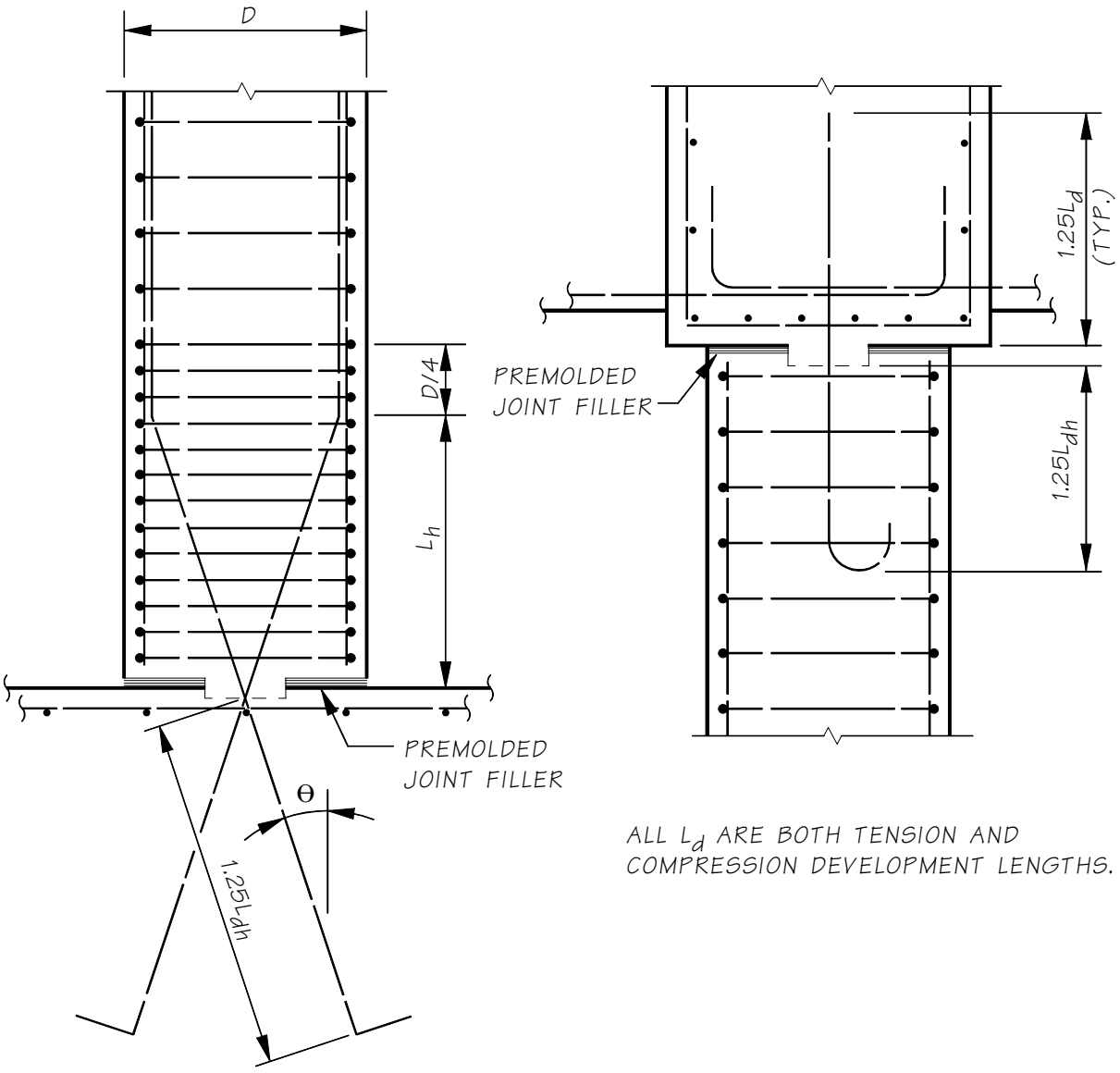

Hinge Details
Figure 7.4.6-1

7.4.7 Reduced Column Fixity

Reduced column fixity uses a reduced column section to decrease overstrength plastic demands into the foundation. The conceptual detail for reduced column base fixity is shown below for a spread footing foundation. This concept could be used for shaft and pile supported foundations also. Traditional column designs are preferred over this detail, but this may be used if it is determined that traditional details will not satisfy the design code requirements due to architectural, balanced stiffness, or other project specific requirements. The reduction at the base of the column shall be designed as described below and detailed as shown in Figure 7.4.7-1. Similar checks will be required if the reduced section were placed at the crossbeam, along with any additional checks required for those sections. One such additional check is joint shear in the crossbeam based on the overstrength plastic capacity of the reduced column section. The design and detail at the top of columns, for architectural flares, is similar.

A. **Inner Concrete Column**

1. **Longitudinal Reinforcement**

a. The longitudinal inner column reinforcement shall extend a distance of L_{ns} into the column and shall be set on top of bottom mat reinforcement of foundation with standard 90° hooks.

$$L_{ns} = L_s + sc + L_p \qquad (7.4.7\text{-}1)$$

Where:

L_s = The larger of $1.7 \times L_{ac}$ or $1.7 \times L_d$ (for Class C lap splice)
L_{ac} = Development length of bar from the AASHTO Seismic 8.8.4.
L_d = Tension development length from AASHTO LRFD 5.11.2.1 (***Note:*** All applicable modification factors for L_d may be used except for the reduction specified in Section 5.11.2.2.2 for As required/As provided)
sc = Distance from longitudinal reinforcement of outer column to inner column.
L_p = Analytical Plastic Hinge Length defined in the AASHTO Seismic 4.11.6-3.

b. The longitudinal reinforcing in the inner column shall meet all the design checks in the AASHTO Seismic and AASHTO LRFD Specifications. Some specific checks of the inner column (inner core) will be addressed as follows:

1) A shear friction check shall be met using the larger of the overstrength plastic shear (Vpo) or the ultimate shear demand from strength load cases at the hinge location. The area of longitudinal inner column reinforcement, A_{st}, in excess of that required in the tensile zone for flexural resistance (usually taken as ½ the total longitudinal bars) may be used for the required shear friction reinforcement, A_{vf}.

2) The flexural capacity of the inner column shall be designed to resist the strength load cases and meet cracking criteria of the service load cases. Special consideration shall be given to construction staging load cases where the column stability depends on completion of portions of the superstructure.

3) The axial capacity of the inner column shall meet the demands of strength load cases assuming the outer concrete has cracked and spalled off. The gross area, A_g, shall be the area contained inside the spiral reinforcement.

4) The inner core shall be designed and detailed to meet all applicable requirements of AASHTO Seismic Section 8.

2. **Transverse Reinforcement**

   a. The portion of the transverse reinforcement for the inner core, inside the larger column dimension (above the foundation), shall meet all the requirements of the AASHTO Seismic and AASHTO LRFD Specification. The demand shall be based on the larger of the overstrength plastic shear demand (*Vpo*) of the inner column or the ultimate shear demand from strength load cases at the hinge location. The transverse reinforcement shall be extended to the top of the longitudinal reinforcement for the inner column (L_{ns}).

   b. The portion of transverse reinforcement for the inner core, in the foundation, shall meet the minimum requirements of the AASHTO Seismic 8.8.8, for compression members, based on the dimensions of the inner column. This reinforcement shall be extended to the bend radius of the of the longitudinal inner column reinforcement for footings or as required for column-shaft connections.

   c. A gap in the inner column transverse reinforcement shall be sized to allow the foundation top mat reinforcement and foundation concrete to be placed prior to setting the upper portion of the transverse inner column reinforcement. This gap shall be limited to 5″; a larger gap will require the WSDOT Bridge Design Engineer's approval. The spiral reinforcement above the footing shall be placed within 1″ of the top of footing to reduce the required gap size. The WSDOT Spiral termination details will be required at each end of this gap, the top of the upper transverse reinforcement, but not the bottom of the lower transverse reinforcement with spread footings.

3. **Analytical Plastic Hinge Region**

   a. The analytical plastic hinge length of the reduced column section shall be based on horizontally isolated flared reinforced concrete columns, using equation 4.11.6-3 of the AASHTO Seismic Specifications.

   b. The end of the column which does not have a reduced column section shall be based on equation 4.11.6-1 of the AASHTO Seismic Specifications.

B. **Outer Concrete Column**

1. The WSDOT Bridge and Structures Office normal practices and procedures shall be met for the column design, with the following exceptions:

   a. The end with the reduced column shall be detailed to meet the seismic requirements of a plastic hinge region. This will ensure that if a plastic hinge mechanism is transferred into the large column shape, it will be detailed to develop such hinge. The plastic shear this section shall be required to resist shall be the same as that of the inner column section.

   b. The WSDOT spiral termination detail shall be placed in the large column at the reduced section end, in addition to other required locations.

   c. In addition to the plastic hinge region requirements at the reduced column end, the outer column spiral reinforcement shall meet the requirements of the WSDOT Noncontact Lap Splices in Bridge Column-Shaft Connections. The *k* factor shall be taken as 0.5 if the column axial load, after moment distribution, is greater than $0.10f'_cA_g$ and taken as 1.0 if the column axial load is in tension. A_g shall be taken as the larger column section. Linear interpolation may be used between these two values.

2. The column end without the reduced column section shall be designed with WSDOT practices for a traditional column, but shall account for the reduced overstrength plastic shear, applied over the length of the column, from the overstrength plastic capacities at each column end.

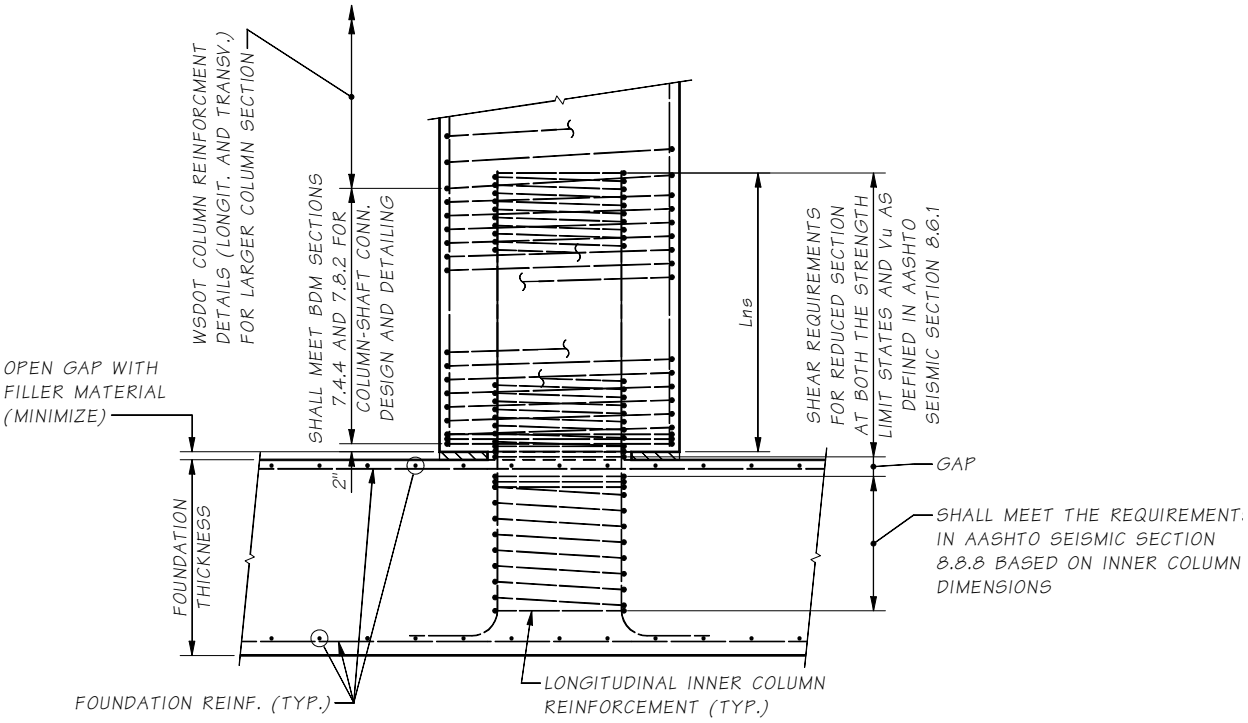

Pinned Column Base Reduced Column Fixity at Base
Figure 7.4.7-1

C. **Gap in Concrete at Reduced Column Section**

1. This gap shall be minimized, but not less than 2″. It shall also be designed to accommodate the larger of 1.5 times the calculated service, strength or extreme elastic rotation or the plastic rotation from a pushover analysis times the distance from the center of the column to the extreme edge of the column. The gap shall be constructed with a material sufficiently strong to support the wet concrete condition. The final material must also meet the requirements described below. If a material can meet both conditions, then it can be left in place after construction, otherwise the construction material must be removed and either cover the gap or fill the gap with a material that meets the following:

   a. The material in the gap must keep soil or debris out of the gap for the life of the structure, especially if the gap is to be buried under fill at the foundation and inspections will be difficult/impossible.

   b. The gap shall be sized to accommodate 1.5 times the rotations from service, strength and extreme load cases. In no loading condition shall the edge of the larger column section cause a compressive load on the footing. If a filler material is used in this gap which can transfer compressive forces once it has compressed a certain distance, then the gap shall be increased to account for this compressive distance of the filler material.

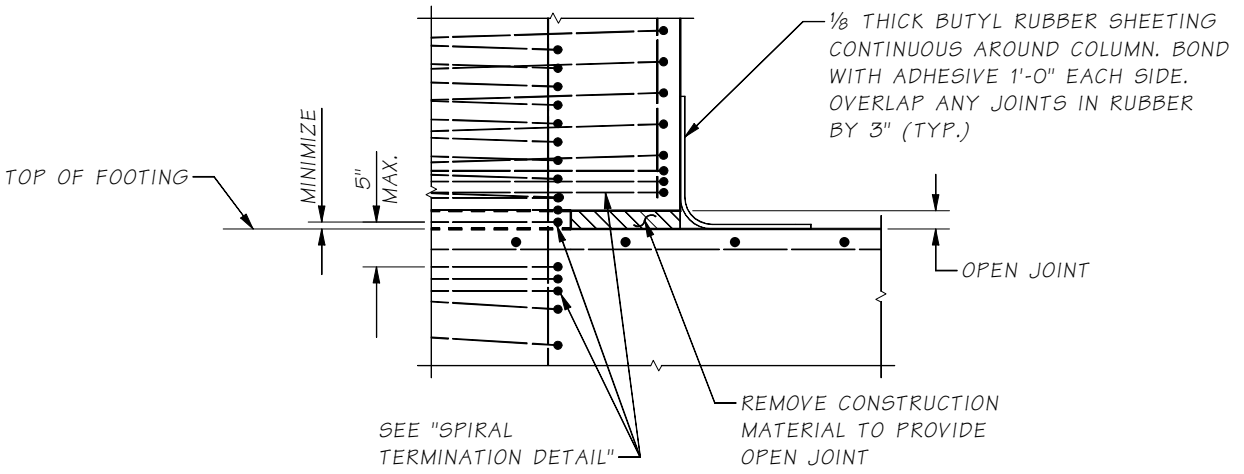

Open Gap Detail
Figure 7.4.7-2

7.5 Abutment Design and Details

7.5.1 Abutment Types

There are four abutment types described in the following section that have been used by the Bridge and Structures Office. The representative types are intended for guidance only and may be varied to suit the requirements of the bridge being designed.

A. **Stub Abutments –** Stub abutments are short abutments where the distance from the girder seat to top of footing is less than approximately 4 feet, see Figure 7.5.1-3. The footing and wall can be considered as a continuous inverted T-beam. The analysis of this type abutment shall include investigation into both bending and shear stresses parallel to centerline of bearing. If the superstructure is relatively deep, earth pressure combined with longitudinal forces from the superstructure may become significant.

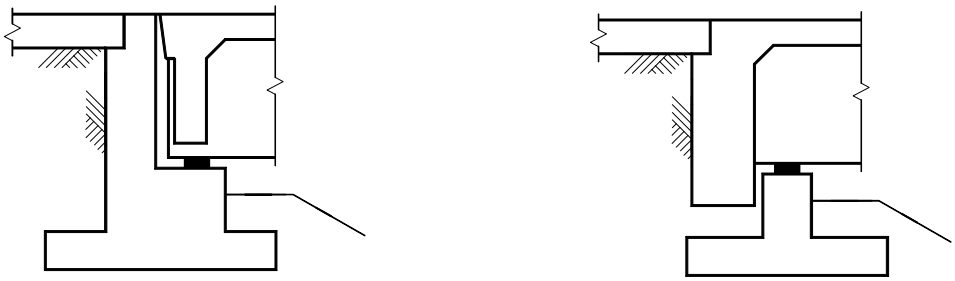

Figure 7.5.1-3

B. **Cantilever Abutments –** If the height of the wall from the bearing seat down to the bottom of the footing exceeds the clear distance between the girder bearings, the assumed 45° lines of influence from the girder reactions will overlap, and the dead load and live load from the superstructure can be assumed equally distributed over the abutment width. The design may then be carried out on a per-foot basis. The primary structural action takes place normal to the abutment, and the bending moment effect parallel to the abutment may be neglected in most cases. The wall is assumed to be a cantilever member fixed at the top of the footing and subjected to axial, shear, and bending loads see Figure 7.5.1-4.

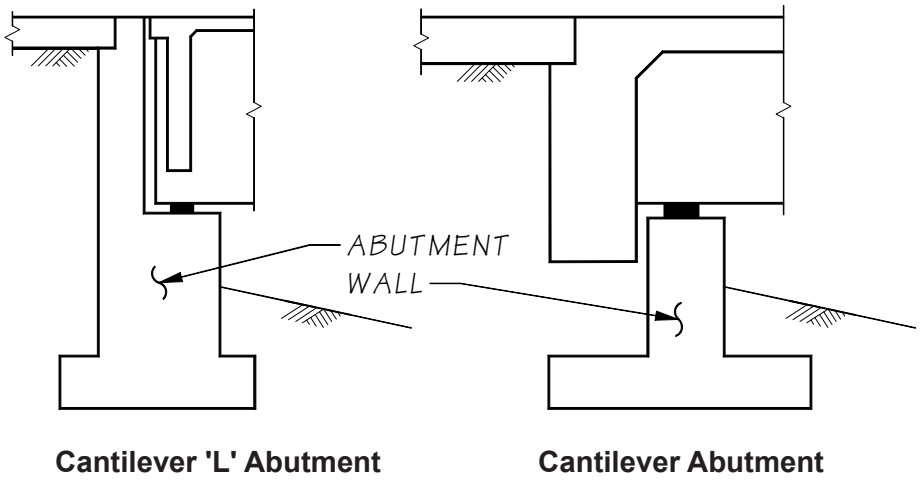

Figure 7.5.1-4

C. **Spill-Through Abutments –** The analysis of this type of abutment is similar to that of an intermediate pier, see Figure 7.5.1-5. The crossbeam shall be investigated for vertical loading as well as earth pressure and longitudinal effects transmitted from the superstructure. Columns shall be investigated for vertical loads combined with horizontal forces acting transversely and longitudinally. For earth pressure acting on rectangular columns, assume an effective column width equal to 1.5 times the actual column width. Short, stiff columns may require a hinge at the top or bottom to relieve excessive longitudinal moments.

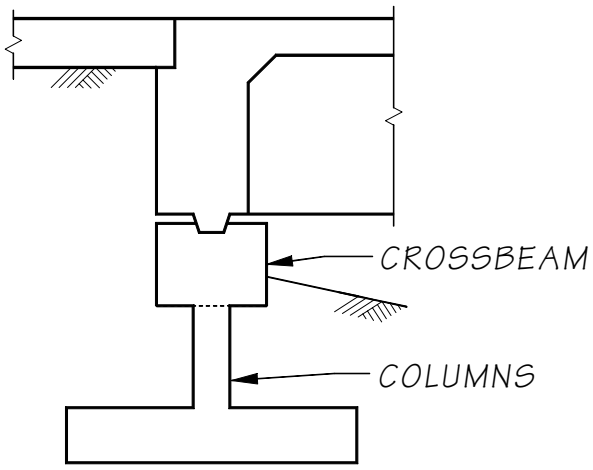

Spill-Through Abutment
Figure 7.5.1-5

D. **Rigid Frame Abutments –** Abutments that are part of a rigid frame are generically shown in Figure 7.5.1-6. At-Rest earth pressures (EH) will apply to these structures. The abutment design should include the live load impact factor from the superstructure. However, impact shall not be included in the footing design. The rigid frame itself should be considered restrained against sidesway for live load only. AASHTO LRFD Chapter 12 addresses loading and analysis of rigid frames that are buried (box culverts).

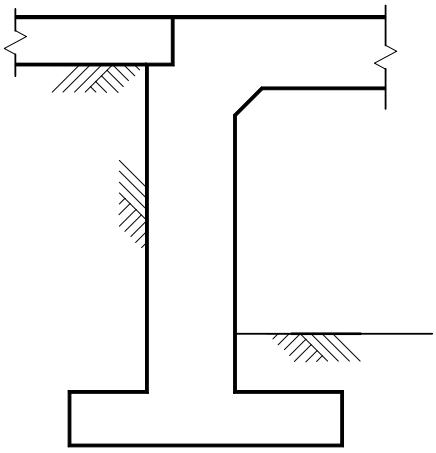

Rigid Frame Abutment
Figure 7.5.1-6

7.5.2 Embankment at Abutments

The minimum clearances for the embankment at the front face of abutments shall be as indicated on *Standard Plans* A-50.10.00 through A-50.40.00. At the ends of the abutment, the fill may be contained with wing walls or in the case of concrete structures, placed against the exterior girders.

7.5.3 Abutment Loading

In general, bridge abutment loading shall be in accordance with AASHTO LRFD Chapter 3. The following simplifications and assumptions may be applied to the abutment design. See Section 7.5 for a force diagram of typical loads as they are applied to an abutment spread footing.

A. **Dead Load - *DC* –** Approach slab dead load reaction taken as 2 kips/foot of wall applied at the pavement seat.

   Active earth pressure (*EH*) and unit weight of backfill and toe fill (*EV*) will be provided in a geotechnical report. The toe fill shall be included in the analysis for overturning if it adds to overturning.

   The passive earth pressure exerted by the fill in front of the abutment is usually neglected in the design. The Geotechnical Branch should be contacted to determine if passive resistance might be considered for analysis of sliding stability. Passive resistance in front of footing is not dependable due to potential for erosion, scour, or future excavation in front of footing.

B. **Live Load - *LL* –** Live load impact does not apply to the abutment. Bridge approach slab live load reaction (without *IM*) applied at the pavement seat may be assumed to be 4.5 kips per foot of wall for HL-93 loading, see Section 10.6 of this manual for bridge approach slab design assumptions. Abutment footing live loads may be reduced (by approximately one axle) if one design truck is placed at the bridge abutment with a bridge approach slab. Adding the pavement seat reaction to the bearing reaction duplicates the axle load from two different design truck configurations.

   If bridge approach slabs are not to be constructed in the project (e.g. bride approach slab details are not included in the bridge sheets of the Plans) a live load surcharge (*LS*) applies.

C. **Earthquake Load - *EQ* –** Superstructure loads shall be transmitted to the substructure through bearings, girder stops or restrainers. As an alternate, the superstructure may be rigidly attached substructure.

   The horizontal earth pressure load (EQ_{soil}) shall be the Mononobe-Okabe (M-O) active pressure coefficient, as described in the AASHTO LRFD Chapter 11, Appendix 11.1.1.1. and AASHTO Seismic Chapter 6. This applies M-O as a uniform pressure to the wall with the resultant force located at 0.5*H*. For more information on Mononobe-Okabe and AASHTO application, see *GDM* Section 15.4.2.9.

   Footing supported walls and abutments that are free to translate or move during a seismic event shall use Mononobe-Okabe soil pressure. The vertical acceleration, k_v, shall be set equal to 0. This also applies to portions substructure isolated from the superstructure by bearings.

   Pile or shaft walls and abutments that are not free to translate or move during a seismic event shall use a horizontal acceleration of 1.5 times peak ground acceleration. The vertical acceleration shall be set equal to 0. See *GDM* Section 15.4.2.7 for descriptions of flexible and non-yielding walls.

   Seismic inertial force of the substructure (EQ_{abut}) is the horizontal acceleration coefficient times the weight of the abutment (including footing). This force acts horizontally in the same direction as the earth pressure, at the mass centroid of the abutment. Seismic inertia force is only applied for stability and sliding analysis. EQ_{abut} shall not be used to determine the reinforcement required in the abutment.

   The load factor for all *EQ* induced loads shall be 1.0, including M-O earth pressure loads.

D. **Bearing Forces – *TU* Strength and Extreme Event I –** For strength design, the bearing shear forces shall be based on ½ of the seasonal temperature change. This force is applied in the direction that causes the worst case loading.

For extreme event I, calculate the maximum friction force (when the bearing slips) and apply in the direction that causes the worst case loading.

7.5.4 WSDOT Temporary Construction Load Cases

A. **Case 1: Superstructure Built after Backfill at Abutment –** If the superstructure is to be built after the backfill is placed at the abutments, the resulting temporary loading would be the maximum horizontal force with the minimum vertical force. During the abutment design, a load case shall be considered to check the stability and sliding of abutments after placing backfill but prior to superstructure placement. This load case is intended as a check for a temporary construction stage, and not meant to be a controlling load case that would govern the final design of the abutment and footing. This loading will generally determine the tensile reinforcement in the top of the footing heel.

If this load case check is found to be satisfactory, a note shall be added to the general notes in the contract plans and the contactor will not be required to make a submittal requesting approval for early backfill placement. This load case shall include a 2′-0″ deep soil surcharge for the backfill placement equipment (LS) as covered by the WSDOT *Standard Specification* Section 2-03.3(14)I.

B. **Case 2: Wingwall Overturning –** It is usually advantageous in sizing the footing to release the falsework from under the wing walls after some portion of the superstructure load is applied to the abutment. A note can cover this item, when applicable, in the sequence of construction on the plans.

7.5.5 Abutment Bearings and Girder Stops

All structures shall be provided with some means of restraint against lateral displacement at the abutments due to earthquake, temperature and shrinkage, wind, earth pressure, etc. Such restraints may be in the form of concrete hinges, concrete girder stops with or without vertical elastomeric pads, or pintles in metal bearings. Other solutions are possible. Article “Connection Design Forces” of the *Guide Specifications for Seismic Design of Highway Bridges* describe longitudinal linkage force and hold-down device required.

All prestressed girder bridges in Western Washington (within and west of the Cascade mountain range) shall have girder stops between all girders at abutments and intermediate piers. This policy is based on fact that the February 28, 2001 Nisqually earthquake caused significant damage to girder stops at bridges where girder stops were not provided between all girders. In cases where girder stops were cast prior to placement of girders and the 3″ grout was placed after setting the girders, the 3″ grout pads were severely damaged and were displaced from their original position.

A. **Abutment Bearings –** The longitudinal forces from the superstructure are normally transferred to the abutments through the bearings. The calculated longitudinal movement shall be used to determine the shear force developed by the bearing pads at the abutments. The Modulus of Elasticity of Neoprene at 70°F (21°C) shall be used for determining the shear force. However, the force transmitted through a bearing pad shall be limited to that which causes the bearing pad to slip. Normally, the maximum load transferred through a Teflon sliding bearing is 6% and through an elastomeric bearing pad is 20% of the dead load reaction of the superstructure. For Extreme Event I, assume the end diaphragm is in contact with abutment wall and no load transfer through the bearings. The bearing force shall not be added to seismic earth pressure forces.

When the force transmitted through the bearing pads is very large, the designer should consider increasing the bearing pad thickness, using TFE sliding bearings and/or utilizing the flexibility of the abutment as a means of reducing the horizontal design force. When the flexibility of the abutment is considered, it is intended that a simple approximation of the abutment deformation be made.

B. **Bearing Seats –** The bearing seats shall be wide enough to accommodate the size of the bearings used with a minimum edge dimension of 3″ and satisfy the requirements of LRFD Section 4.7.4.4. On L abutments, the bearing seat shall be sloped away from the bearings to prevent a build up or pocket of water at the bearings. The superelevation and profile grade of the structure should be considered for drainage protection. Normally, a ¼″ drop across the width of the bearing seat is sufficient.

C. **Transverse Girder Stops –** Transverse girder stops are required for all abutments in order to transfer lateral loads from the superstructure to the abutment. Abutments shall normally be considered as part of the Earthquake Resisting System (ERS). Girder stops shall be full width between girder flanges except to accommodate bearing replacement requirements as specified in Chapter 9 of this manual. The girder stop shall be designed to resist loads at the Extreme Limit State for the earthquake loading, Strength loads (wind etc.) and any transverse earth pressure from skewed abutments, etc. Girder stops are designed using shear friction theory and the shear strength reduction factor shall be $\varphi s = 0.9$. The possibility of torsion combined with horizontal shear when the load does not pass through the centroid of the girder stop shall also be investigated.

   In cases where the WSDOT Bridge Design Engineer permits use of ERS #3 described in Section 4.2.2 of this manual, which includes a fusing mechanism between the superstructure and substructure, the following requirements shall be followed:

   - The abutment shall not be included in the ERS system, the girder stops shall be designed to fuse, and the shear strength reduction factor shall be $\varphi s = 1.0$.
   - If a girder stop fusing mechanism is used on a pile supported abutment, the combined overstrength capacity of the girder stops per AASHTO Seismic 4.14 shall be less than the combined plastic shear capacity of the piles.

   The detail shown in Figure 7.5.5-1 may be used for prestressed girder bridges. Prestressed girders shall be placed in their final position before girder stops are cast to eliminate alignment conflicts between the girders and girder stops. All girder stops shall provide ⅛″ clearance between the prestressed girder flange and the girder stop.

   For skewed bridges with semi-integral or end type A diaphragms, the designer shall evaluate the effects of earth pressure forces on the transverse girder stop pads. The performance of girder stop bearings shall be investigated at Service Limit State. These bearings are placed vertically against the girder stop to transfer the skew component of the earth pressure to the abutment without restricting the movement of the superstructure in the direction parallel to centerline. In some cases bearing assemblies containing sliding surfaces may be necessary to accommodate large superstructure movements.

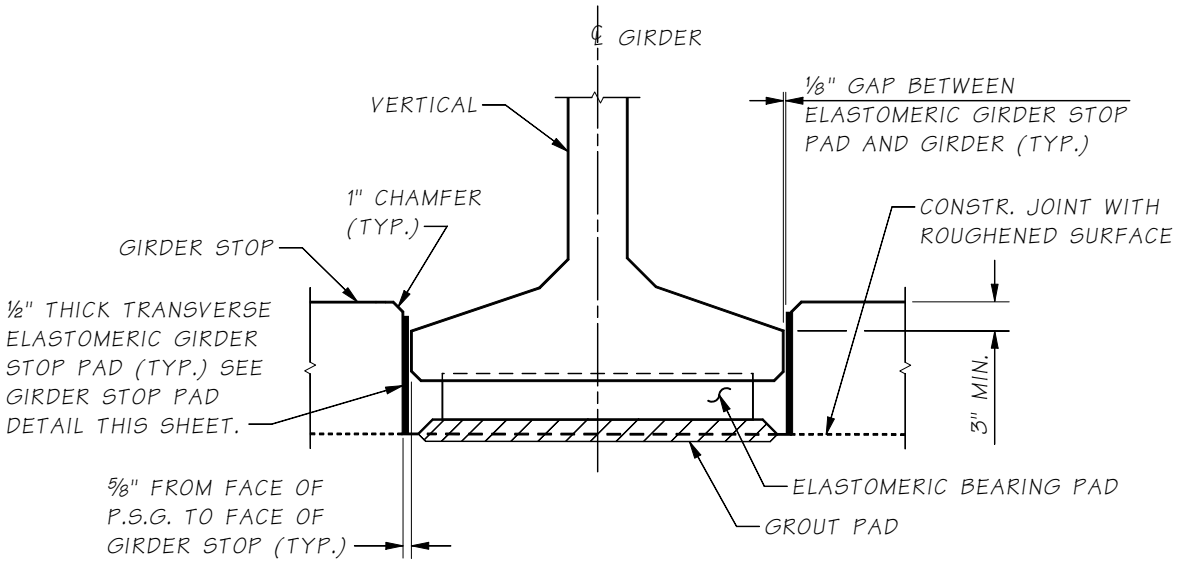

GIRDER STOP DETAIL

NOTE:

1. GIRDER STOPS SHALL BE CONSTRUCTED AFTER PLACEMENT OF PRESTRESSED GIRDERS.

2. TRANSVERSE ELASTOMERIC GIRDER STOP PADS BETWEEN GIRDER AND GIRDER STOPS SHALL BE PLACED AFTER CONSTRUCTING THE GIRDER STOPS. THE PADS SHALL BE BONDED TO GIRDER STOPS WITH APPROVED ADHESIVE.

Girder Stop Details
Figure 7.5.5-1

7.5.6 Abutment Expansion Joints

For structures without expansion joints, the earth pressure against the end diaphragm is transmitted through the superstructure. The compressibility of the expansion joint shall be considered in the design of the abutment for earthquake, temperature, and shrinkage when these forces increase the design load.

7.5.7 Open Joint Details

Vertical expansion joints extending from the top of footings to the top of the abutment are usually required between abutments and adjacent retaining walls to handle anticipated movements. The expansion joint is normally filled with premolded joint filler which is not water tight. There may be circumstances when this joint must be water tight; ⅛ butyl rubber may be used to cover the joint. The open joint in the barrier shall contain a compression seal to create a watertight joint. Figure 7.5.7-1 shows typical details that may be used. Aesthetic considerations may require that vertical expansion joints between abutments and retaining walls be omitted. This is generally possible if the retaining wall is less than 60 feet long.

The footing beneath the joint may be monolithic or cast with a construction joint. In addition, dowel bars may be located across the footing joint parallel to the wall elements to guard against differential settlement or deflection.

On abutments with the end diaphragm cast on the superstructure, the open joints must be protected from the fill spilling through the joint. Normally butyl rubber is used to seal the openings. See the end diaphragm details in the Appendices of Chapter 5 for details.

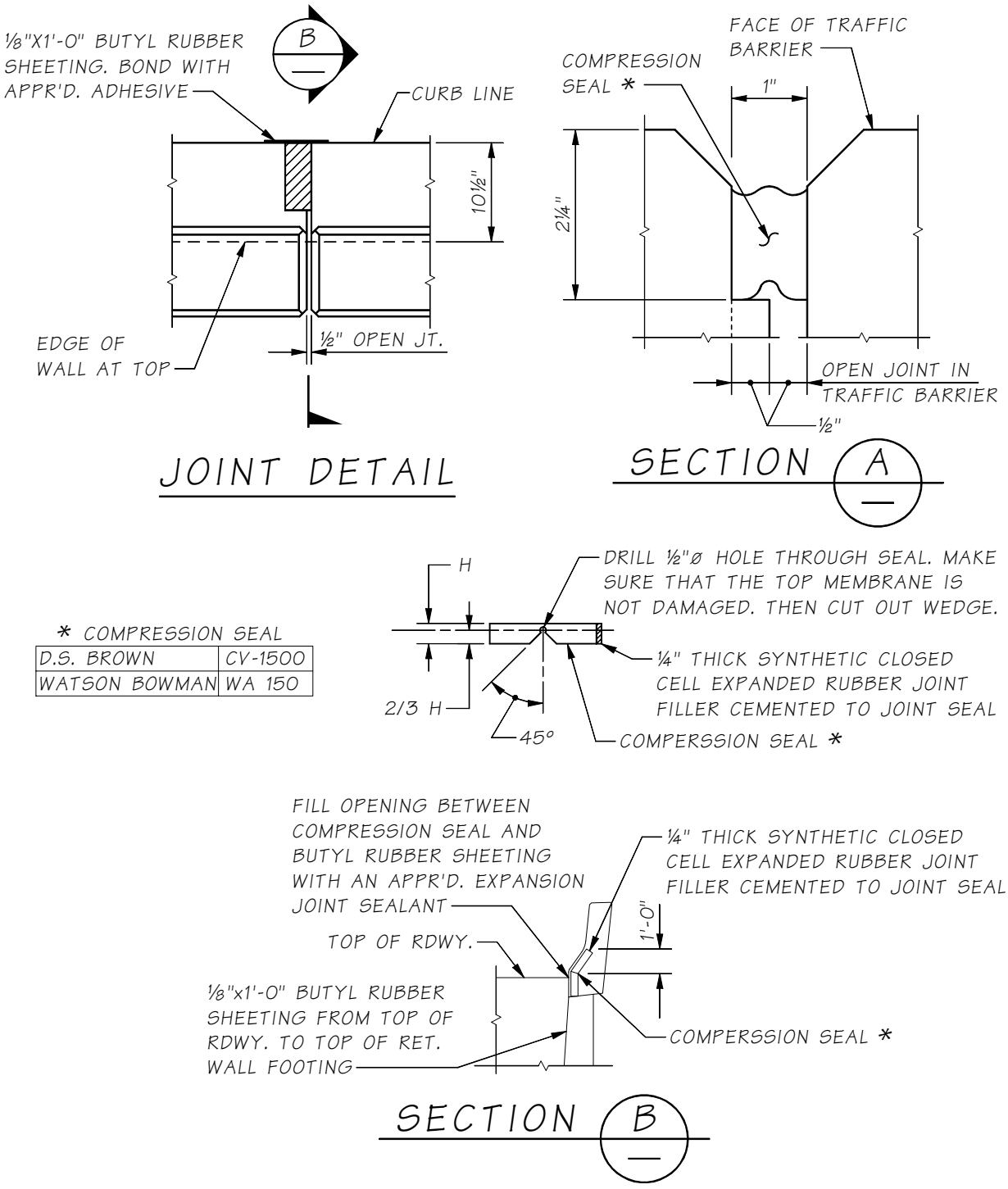

Open Joint Details Between Abutment and Retaining Walls

Figure 7.5.7-1

7.5.8 Construction Joints

To simplify construction, vertical construction joints are often necessary, particularly between the abutment and adjacent wing walls. Construction joints should also be provided between the footing and the stem of the wall. Shear keys shall be provided at construction joints between the footing and the stem, at vertical construction joints or at any construction joint that requires shear transfer. The *Standard Specifications* cover the size and placement of shear keys. The location of such joints shall be detailed on the plans. Construction joints with roughened surface can be used at locations (except where needed for shear transfer) to simplify construction. These should be shown on the plans and labeled "Construction Joint With Roughened Surface." When construction joints are located in the middle of the abutment wall, a pour strip should be used for a clean joint between pours. Details of the pour strip should be shown in the plans.

7.5.9 Abutment Wall Design

When the primary structural action is parallel to the superstructure or normal to the abutment face, the wall shall be treated as a column subjected to combined axial load and bending moment. Compressive reinforcement need not be included in the design of cantilever walls, but the possibility of bending moment in the direction of the span as well as towards the backfill shall be considered. A portion of the vertical bars may be cut off where they are no longer needed for stress.

A. In general, horizontal reinforcement should be placed outside of vertical reinforcement to facilitate easier placement of reinforcement.

B. Shrinkage and Temperature Reinforcement

   AASHTO LRFD 5.10.8 shall be followed for providing the minimum temperature and shrinkage steel near surfaces of concrete exposed to daily temperature changes and in structural mass concrete. On abutments that are longer than 60′, consideration should be given to have vertical construction joints to minimize shrinkage cracks.

   The minimum cross tie reinforcement in the abutment wall is as follows: #4 tie bars with 135° hooks, spaced at approximately 2′-0″ center to center vertically and at approximately 2′-0″ center to center horizontally shall be furnished throughout the abutment stem in all but stub abutments, see Figure 7.5.9-1.

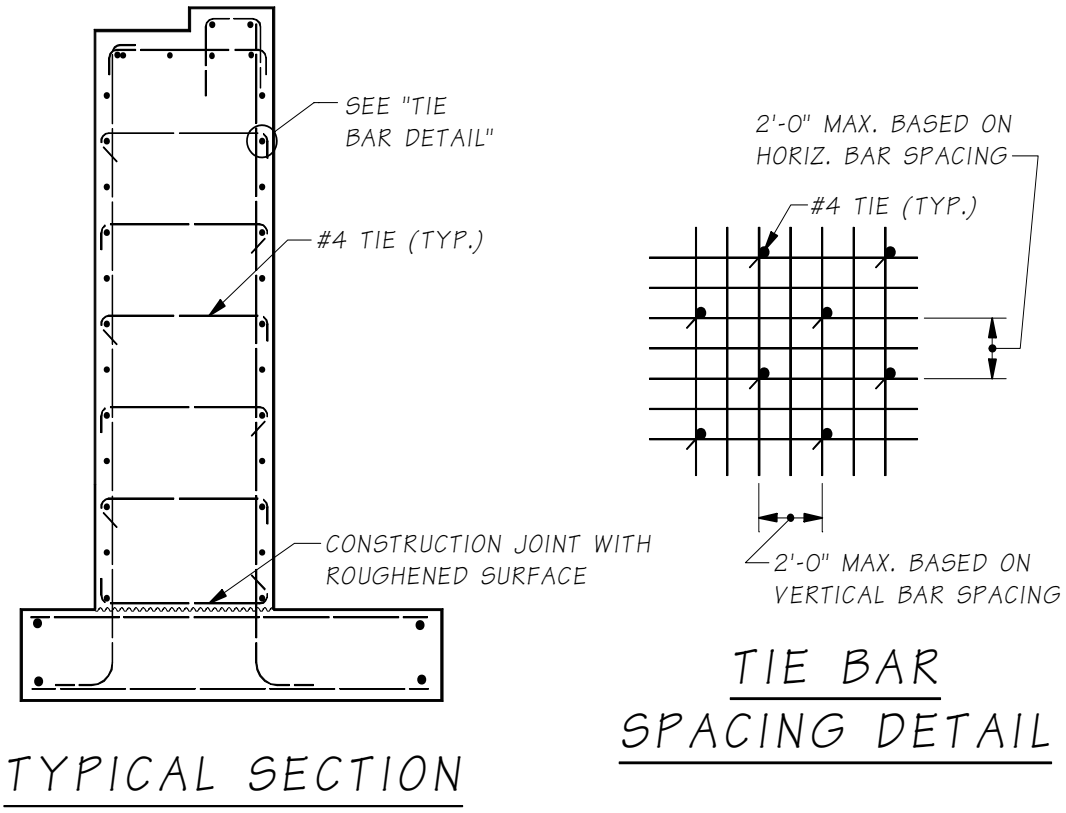

Cross Tie Details
Figure 7.5.9-1

7.5.10 Drainage and Backfilling

3″ diameter weep holes shall be provided in all bridge abutment walls. These shall be located 6″ above the final ground line at about 12′ on centers. In cases where the vertical distance between the top of the footing and the bearing seat is greater than 10′, additional weep holes shall be provided 6″ above the top of the footing. No weep holes are necessary in cantilever wing walls where a wall footing is not used.

The details for gravel backfill for wall, underdrain pipe and backfill for drain shall be indicated on the plans. The gravel backfill for wall shall be provided behind all bridge abutments. The underdrain pipe and gravel backfill for drain shall be provided behind all bridge abutments except abutments on fills with a stem wall height of 5′ or less. When retaining walls with footings are attached to the abutment, a blockout may be required for the underdrain pipe outfall. Cooperation between Bridge and Structures Office and the Design PE Office as to the drainage requirements is needed to guarantee proper blockout locations.

Underdrain pipe and gravel backfill for drain are not necessary behind cantilever wing walls. A 3′ thickness of gravel backfill for wall behind the cantilever wing walls shall be shown in the plans.

The backfill for wall, underdrain pipe and gravel backfill for drain are not included in bridge quantities, the size of the underdrain pipe should not be shown on the bridge plans, as this is a Design PE Office design item and is subject to change during the design phase. Figure 7.5.10-1 illustrates backfill details.

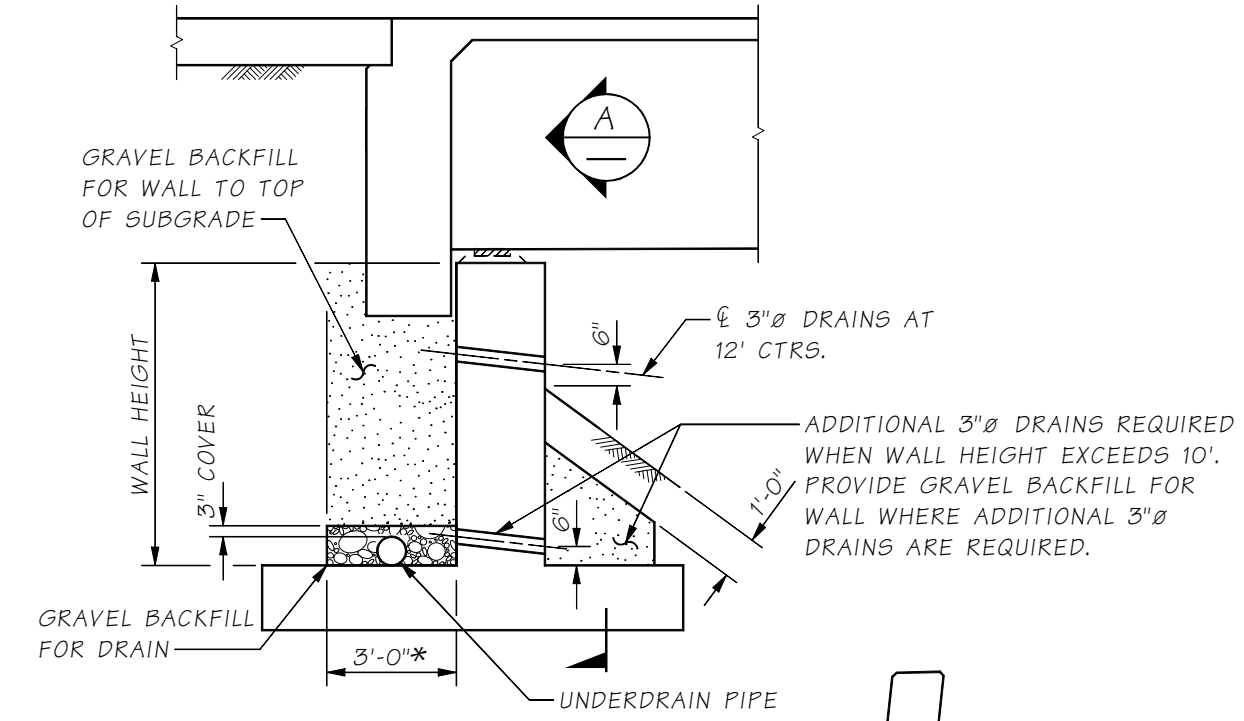

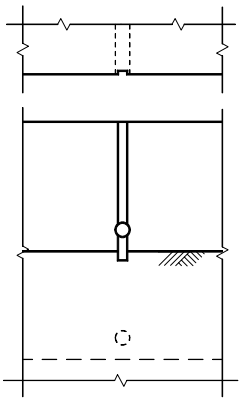

SECTION A

WHERE DRAINS ARE USED WITH RUSTICATION STRIPS DETAIL SO DRAIN ENDS ON THE STRIP.

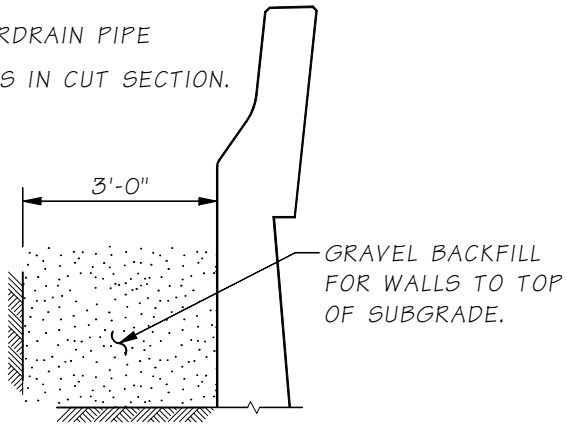

SECTION THROUGH WING WALL

GRAVEL BACKFILL FOR DRAIN, GRAVEL BACKFILL FOR WALL, AND UNDERDRAIN PIPE NOT INCLUDED IN BRIDGE QUANTITIES

Drainage and Backfill Details
Figure 7.5.10-1

7.6 Wing/Curtain Wall at Abutments

Particular attention should be given to the horizontal reinforcing steel required at fixed corners between abutment and wing/curtain walls. Since wall deflections are zero near the abutment, curtain walls and cantilever wing walls shall assume an at-rest soil pressure. This increased loading can normally be reduced to an Active soil pressure at a distance (from the corner), equal to the average height of the wall under design. At this distance, the wall deflections are assumed large enough to allow the active state soil pressures to be developed. For the typical abutment, wingwall moments may be assumed to distribute stress to the outer 10′ portion of the abutment wall. See WSDOT *Geotechnical Design Manual* M 46-03 Section 15.4.2.7, "Active, Passive, and At-Rest Pressures."

7.6.1 Traffic Barrier Loads

Traffic barriers shall be rigidly attached to a bridge approach slab that is cantilevered over the top of a wing/curtain wall or Structural Earth wall. The barrier collision load is applied directly to the bridge approach slab. The yield line theory as specified in AASHTO LRFD A13.3 is primarily for traffic barrier on bridge deck slabs and may not be applicable to traffic barrier on less rigid supports, such as retaining walls.

7.6.2 Wingwall Design

The following wingwall design items should be addressed in the Plans.

A. For strength design of wingwalls, vertical loads and moments may be distributed over 10′ of the abutment wall and footing.

B. Footing thickness shall be not less than 1′-6″.

C. Exterior girder top flanges should be located (at the least) inside the curb line at the end pier.

D. For skewed bridges, modify the details on the traffic barrier and approach slab sheet so the expansion joint detailing agree. List appropriate manufacturers and model numbers for the expansion joint system. Generally, a 1″ expansion joint with a 1″ open joint in the barrier is shown in the plans, unless the bridge expansion joint design dictates otherwise.

7.6.3 Wingwall Detailing

All wingwall reinforcement should be a vertical grid and not follow a tapered bottom of wall. This allows for the steel to be placed in two layers that fits better with abutment reinforcing.

7.7 Footing Design

7.7.1 General Footing Criteria

The provisions given in this section pertain to both spread footings and pile supported footings.

A. **Minimum Cover and Footing Depth –** The geotechnical report may specify a minimum footing depth in order to ensure adequate bearing pressure. Stream crossings may require additional cover depth as protection against scour. The HQ Hydraulic Section shall be consulted on this matter. Footings set too low result in large increases in cost. The end slope on the bridge approach fill is usually set at the preliminary plan stage but affects the depth of footings placed in the fill. Figure 7.7.1-1 illustrates footing criteria when setting footing elevations.

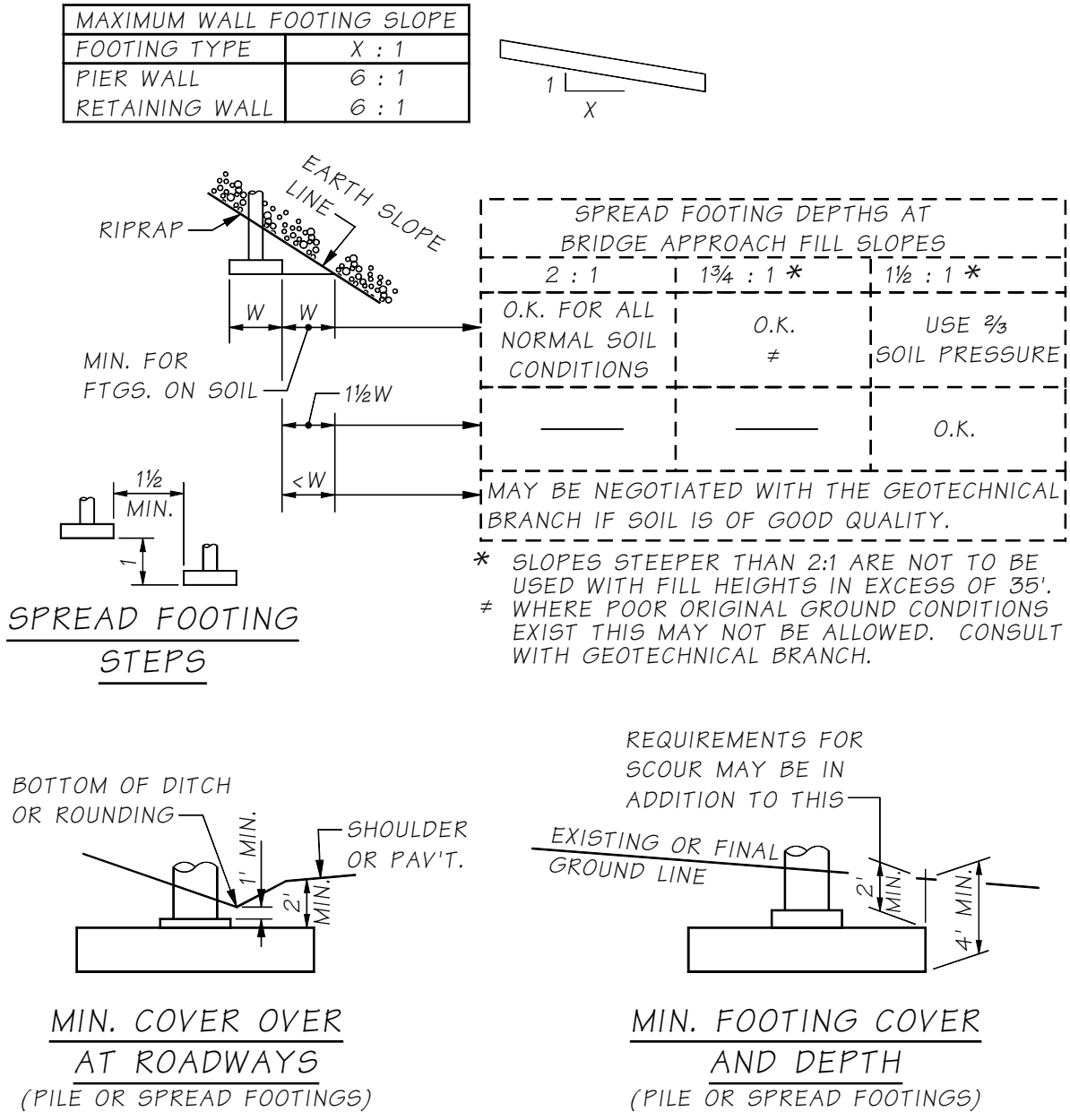

Guidelines for Footing Cover and Depth
Figure 7.7.1-1

B. **Pedestals –** A pedestal is sometimes used as an extension of the footing in order to provide additional depth for shear near the column. Its purpose is to provide adequate structural depth while saving concrete. For proportions of pedestals, see Figure 7.7.1-2. Since additional forming is required to construct pedestals, careful thought must be given to the trade off between the cost of the extra forming involved and the cost of additional footing concrete. Also, additional foundation depth may be needed for footing cover. Whenever a pedestal is used, the plans shall note that a construction joint will be permitted between the pedestal and the footing. This construction joint should be indicated as a construction joint with roughened surface.

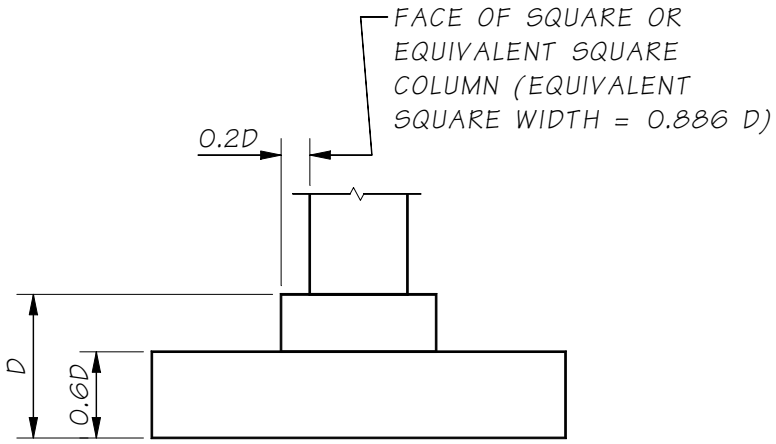

Pedestal Dimensions
Figure 7.7.1-2

7.7.2 Loads and Load Factors

The following Table 7.7.2-1 is a general application of minimum and maximum load factors as they apply to a generic footing design. Footing design must select the maximum or minimum Load Factors for various modes of failure for the Strength and Extreme Event Limit States.

The dead load includes the load due to structural components and non-structural attachments (*DC*), and the dead load of wearing surfaces and utilities (*DW*). The live load (*LL*) does not include vehicular dynamic load allowance (*IM*).

Designers are to note, if column design uses magnified moments, then footing design must use magnified column moments.

Sliding and Overturning, e_o	Bearing Stress (e_c, s_v)
LL_{min} = 0	LL_{max}
DC_{min}, DW_{min} for resisting forces, DC_{max}, DW_{max} for causing forces,	DC_{max}, DW_{max} for causing forces DC_{min}, DW_{min} for resisting forces
EV_{min}	EV_{max}
EH_{max}	EH_{max}
LS	LS

Load Factors
Table 7.7.2-1

7.7.3 Geotechnical Report Summary

The Geotechnical Branch will evaluate overall bridge site stability. Slope stability normally applies to steep embankments at the abutment. If stability is in question, a maximum service limit state load will be specified in the report. Bridge design will determine the maximum total service load applied to the embankment. The total load must be less than the load specified in the geotechnical report.

Based on the foundations required in the Preliminary Plan and structural information available at this stage, the Report provides the following geotechnical engineering results. For all design limit states, the total factored footing load must be less than factored resistance.

A. **Plan Detailing –** The bridge plans shall include the nominal bearing resistance in the General Notes as shown in Figure 7.7.3-1. This information is included in the Plans for future reference by the Bridge and Structures Office.

Nominal Bearing Resistance Of The Spread Footings Shall Be Taken As, In KSF:		
Pier No.	Service-I Limit State	Strength and Extreme Event-I Limit States
1	====	====
2	====	====

Figure 7.7.3-1

B. **Bearing Resistance - Service, Strength and Extreme Limit States –** The unfactored bearing capacity (q_n) may be increased or reduced based on previous experience for the given soils. The geotechnical report will contain the following information:

- Unfactored bearing resistance (q_n) for anticipated effective footing widths, which is the same for the strength and extreme event limit states
- Resistance factor for strength limit state (ϕ_b).
- Resistance factor for the extreme event limit state (ϕ_b) is 1.0
- Service bearing resistance (q_{ser}) and amount of assumed settlement
- Embedment depth requirements or footing elevations to obtain the recommended q_n

C. **Sliding Resistance - Strength and Extreme Limit States –** The geotechnical report will contain the following information to determine earth loads and the factored sliding resistance (Q_R).
$Q_R = \phi \quad Q_n = \phi$

- Resistance factor for strength limit state (ϕ_τ)
- Soil parameters ϕ_{soil}, K_a, and γ for calculating Q_τ and active force (EH) behind abutment footings
- If passive earth pressure (Q_{ep}) is allowed at a footing,
- Soil parameters of ϕ_{soil}, K_p, γ and depth of soil in front of footing
- Resistance factor ϕ_{ep} for strength

D. **Foundation Springs - Extreme Limit State –** When a structural evaluation of soil response is required for a bridge analysis, the Geotechnical Branch will determine foundation soil/rock shear modulus and Poissons ratio (G and μ). These values will typically be determined for shear strain levels of 2% to 0.2%, which are typical strain levels for large magnitude earthquakes.

7.7.4 Spread Footing Structural Design

The following section is oriented toward abutment spread footing design. Spread footing designs for intermediate piers or other applications use the same concepts with the appropriate structural analysis. Structural designers should complete all design checks before consulting with the geotechnical engineer about any design problem. There may be several problem criteria that should be addressed in the solution.

A. **Abutment Spread Footing Force Diagram –** Figures 7.7.4-1 and 7.7.4-2 diagram the forces that act on abutment footings. Each limit state design check will require calculation of a reaction (R) and the location (X_o) or eccentricity (e_o). The ultimate soil passive resistance (Q_{ep}) at the toe is determined by the geotechnical engineer and is project specific.

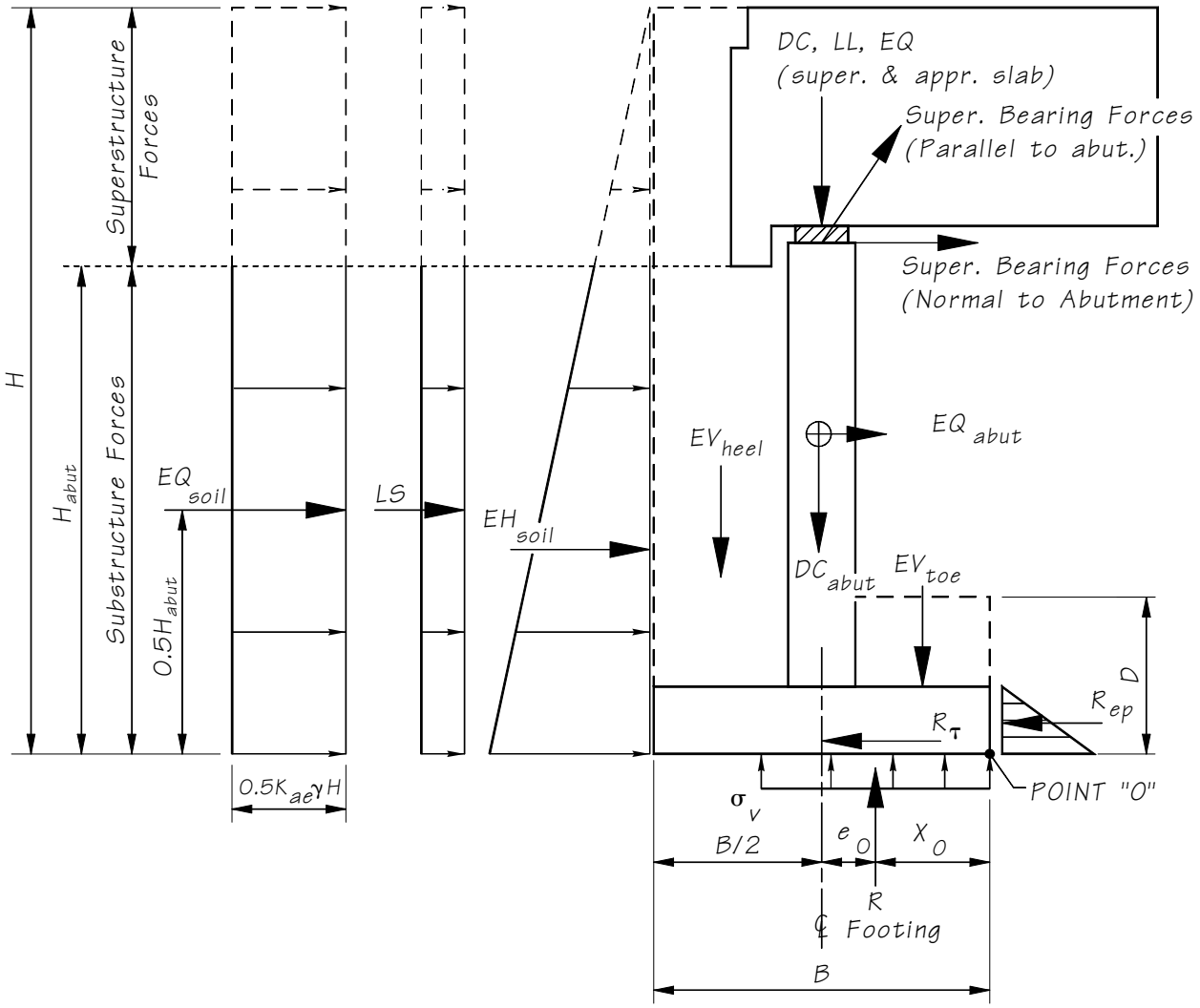

Cantilever (End Diaphragm) Abutment Force Diagram
Figure 7.7.4-1

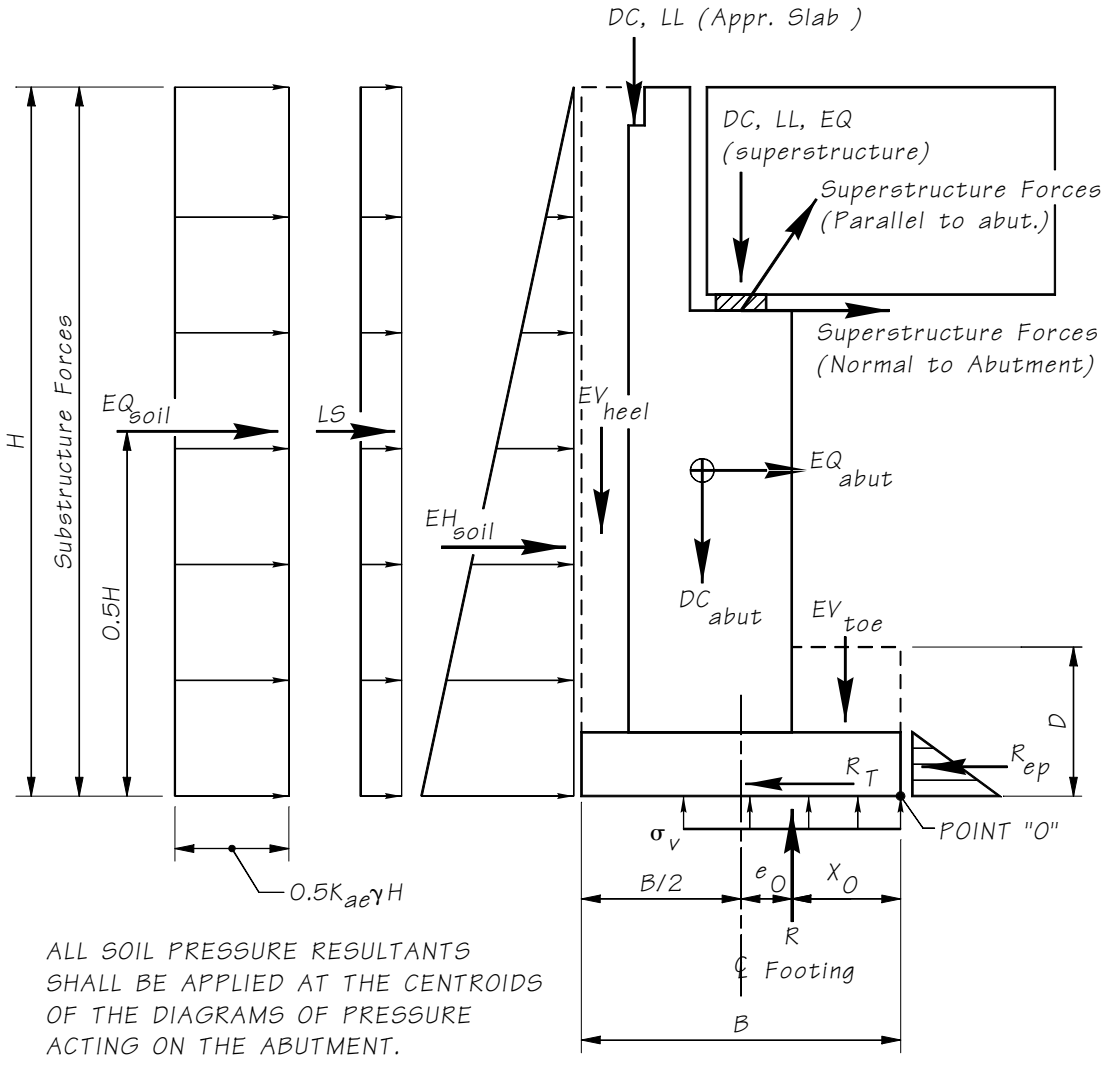

L-Abutment Force Diagram
Figure 7.7.4-2

B. **Bearing Stress –** For geotechnical and structural footings design, the bearing stress calculation assumes a uniform bearing pressure distribution. For footing designs on rock, the bearing stress is based on a triangular or trapezoidal bearing pressure distribution. The procedure to calculate bearing stress is summarized in the following outline. See Abutment Spread Footing Force Diagrams for typical loads and eccentricity.

Step 1: Calculate the Resultant force (R_{str}), location (Xo_{str}) and eccentricity for Strength (e_{str}).

Xo_{str} = (factored moments about the footing base)/(factored vertical loads)

Step 2A: For Footings on Soil:

Calculate the maximum soil stress (σ_{str}) based on a uniform pressure distribution. Note that this calculation method applies in both directions for biaxially loaded footings. See AASHTO LRFD 10.6.3.1.5 for guidance on biaxial loading. The maximum footing pressure on soil with a uniform distribution is:

$\sigma_{str} = R/B' = R/2Xo = R/(B\text{-}2e)$, where B' is the effective footing width.

Step 2B: For Footings on Rock:

If the reaction is outside the middle ⅓ of the base, use a triangular distribution.

σ_{str} max = $2R/3\ Xo$, where "R" is the factored limit state reaction.

If the reaction is within the middle ⅓ of the base, use a trapezoidal distribution.

σ_{str} max = $R/B\ (1+ 6\ e/B)$

In addition, WSDOT limits the maximum stress (P/A) applied to rock due to vertical loads only. This is because the rock stiffness approaches infinity relative to the footing concrete. The maximum width of uniform stress is limited to C+2D as shown in Figure 7.7.4-3.

Step 3: Compare the factored bearing stress (σ_{str}) to the factored bearing capacity ($\phi b_c q_n$) of the soil or rock. The factored bearing stress must be less than or equal to the factored bearing capacity.

$\sigma_{str} \leq \phi b_c q_n$

Step 4: Repeat steps 1 thru 3 for the Extreme Event limit state. Calculate Xo_{ext}, e_{ext}, and σ_{ext} using Extreme factors and compare the factored stress to the factored bearing ($\phi_b q_n$).

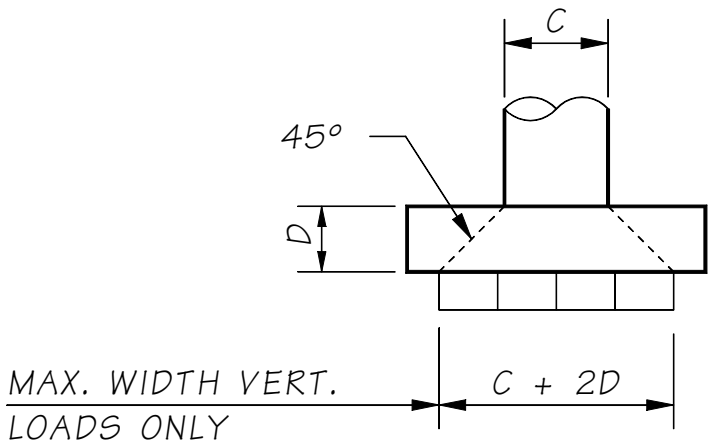

Footings on Rock
Figure 7.7.4-3

C. **Failure By Sliding –** The factored sliding resistance (Q_R) is comprised of a frictional component ($\varphi_\tau Q_\tau$) and the Geotechnical Branch may allow a passive earth pressure component ($\phi_{ep} Q_{ep}$). The designer shall calculate Q_R based on the soil properties specified in the geotechnical report. The frictional component acts along the base of the footing, and the passive component acts on the vertical face of a buried footing element. The factored sliding resistance shall be greater than or equal to the factored horizontal applied loads.

$$Q_R = \phi_T Q_T + \phi_{ep} Q_{ep}$$

The Strength Limit State ϕ_τ and ϕ_{ep} are provided in the geotechnical report or AASHTO LRFD 10.5.5.2.2-1. The Extreme Event Limit State Q_τ and ϕ_{ep} are generally equal to 1.0.

Where:

Q_τ	=	(R) tan δ
tan δ	=	Coefficient of friction between the footing base and the soil
tan δ	=	*tan* ϕ for cast-in-place concrete against soil
tan δ	=	(0.8)*tan* ϕ for precast concrete
R	=	Vertical force - Minimum Strength and Extreme factors are used to calculate R
ϕ	=	angle of internal friction for soil

D. **Overturning Stability –** Calculate the locations of the overturning reaction (R) for strength and extreme limit states. Minimum load factors are applied to forces and moments resisting overturning. Maximum load factors are applied to forces and moments causing overturning. Note that for footings subjected to biaxial loading, the following eccentricity requirements apply in both directions.

See AASHTO LRFD 11.6.3.3 (Strength Limit State) and 11.6.5 (Extreme Event Limit State) for the appropriate requirements for the location of the overturning reaction (R).

E. **Footing Settlement –** The service limit state bearing capacity (q_{ser}) will be a settlement-limited value, typically 1″.

Bearing Stress = $\sigma_{ser} < \phi q_{ser}$ = Factored nominal bearing

Where, q_{ser} is the unfactored service limit state bearing capacity and ϕ is the service resistance factor. In general, the resistance factor (ϕ) shall be equal to 1.0.

For immediate settlement (not time dependent), both permanent dead load and live load should be considered for sizing footings for the service limit state. For long-term settlement (on clays), only the permanent dead loads should be considered.

If the structural analysis yields a bearing stress (σ_{ser}) greater than the bearing capacity, then the footing must be re-evaluated. The first step would be to increase the footing size to meet bearing capacity. If this leads to a solution, recheck layout criteria and inform the geotechnical engineer the footing size has increased. If the footing size cannot be increased, consult the geotechnical engineer for other solutions.

F. **Concrete Design –** Footing design shall be in accordance with AASHTO 5.13.3 for footings and the general concrete design of AASHTO Chapter 5. The following Figure 7.7.4-4 illustrates the modes of failure checked in the footing concrete design.

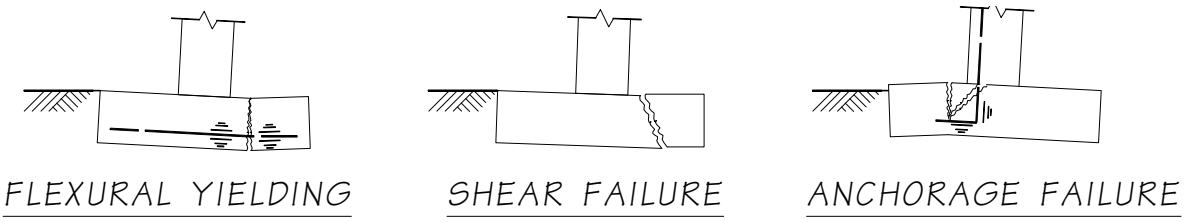

Figure 7.7.4-4

1. **Footing Thickness and Shear –** The minimum footing thickness shall be 1′-0″. The minimum plan dimension shall be 4′-0″. Footing thickness may be governed by the development length of the column dowels, or by concrete shear requirements (with or without reinforcement). If concrete shear governs the thickness, it is the engineer's judgment, based on economics, as to whether to use a thick footing unreinforced for shear or a thinner footing with shear reinforcement. Generally, shear reinforcement should be avoided but not at excessive cost in concrete, excavation, and shoring requirements. Where stirrups are required, place the first stirrup at *d*/2 from the face of the column or pedestal. For large footings, consider discontinuing the stirrups at the point where $vu = vc$.

2. **Footing Force Distribution –** The maximum shear stress in the footing concrete shall be determined based on a triangular or trapezoidal bearing pressure distribution, see AASHTO LRFD 5.13.3.6. This is the same pressure distribution as for footing on rock, see Section 7.7.4B.

3. **Vertical Reinforcement (Column or Wall) –** Vertical reinforcement shall be developed into the footing to adequately transfer loads to the footing. Vertical rebar shall be bent 90° and extend to the top of the bottom mat of footing reinforcement. This facilitates placement and minimizes footing thickness. Bars in tension shall be developed using 1.25 *Ld*. Bars in compression shall develop a length of 1.25 *Ld*, prior to the bend. Where bars are not fully stressed, lengths may be reduced in proportion, but shall not be less than ¾ *Ld*.

   The concrete strength used to compute development length of the bar in the footing shall be the strength of the concrete in the footing. The concrete strength to be used to compute the section strength at the interface between footing and a column concrete shall be that of the column concrete. This is allowed because of the confinement effect of the wider footing.

4. **Bottom Reinforcement –** Concrete design shall be in accordance with AASHTO LRFD Specifications. Reinforcement shall not be less than #6 bars at 12″ centers to account for uneven soil conditions and shrinkage stresses.

5. **Top Reinforcement –** Top reinforcement shall be used in any case where tension forces in the top of the footing are developed. Where columns and bearing walls are connected to the superstructure, sufficient reinforcement shall be provided in the tops of footings to carry the weight of the footing and overburden assuming zero pressure under the footing. This is the uplift earthquake condition described under "Superstructure Loads." This assumes that the strength of the connection to the superstructure will carry such load. Where the connection to the superstructure will not support the weight of the substructure and overburden, the strength of the connection may be used as the limiting value for determining top reinforcement. For these conditions, the AASHTO LRFD requirement for minimum percentage of reinforcement will be waived. Regardless of whether or not the columns and bearing walls are connected to the superstructure, a mat of reinforcement shall normally be provided at the tops of footings. On short stub abutment walls (4′ from girder seat to top of footing), these bars may be omitted. In this case, any tension at the top of the footing, due to the weight of the small overburden, must be taken by the concrete in tension.

Top reinforcement for column or bearing wall footings designed for two-way action shall not be less than #6 bars at 12″ centers, in each direction while top reinforcement for bearing wall footings designed for one-way action shall not be less than #5 bars at 12″ centers in each direction.

7.7.5 Footing Concrete Design on Pile Supports

The minimum footing thickness shall be 2′-0″. The minimum plan dimension shall be 4′-0″. Footing thickness may be governed by the development length of the column dowels, or by concrete shear requirements. The use of strut and tie modeling is recommended for the design of all pile caps and pile footings. Figure 7.7.5-1 identifies the modes of failure that should be investigated for general pile cap/ footing design.

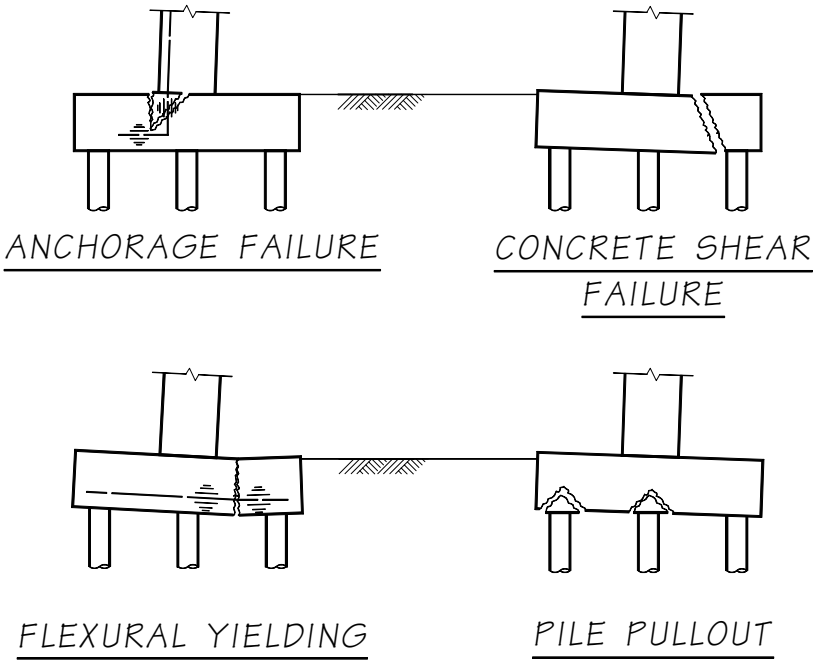

Pile Footing Modes of Failure
Figure 7.7.5-1

A. **Pile Embedment, Clearance, and Rebar Mat Location –** All piles shall have an embedment in the concrete sufficient to resist moment, shear, and axial loads. Cast-in-place concrete piles with reinforcing extending into footings are embedded a minimum of 6″. The clearance for the bottom mat of footing reinforcement shall be 1½″ between the reinforcing and the top of the pile for CIP pile footings. See Figure 7.7.5-2 for the minimum pile clearance to the edge of footing.

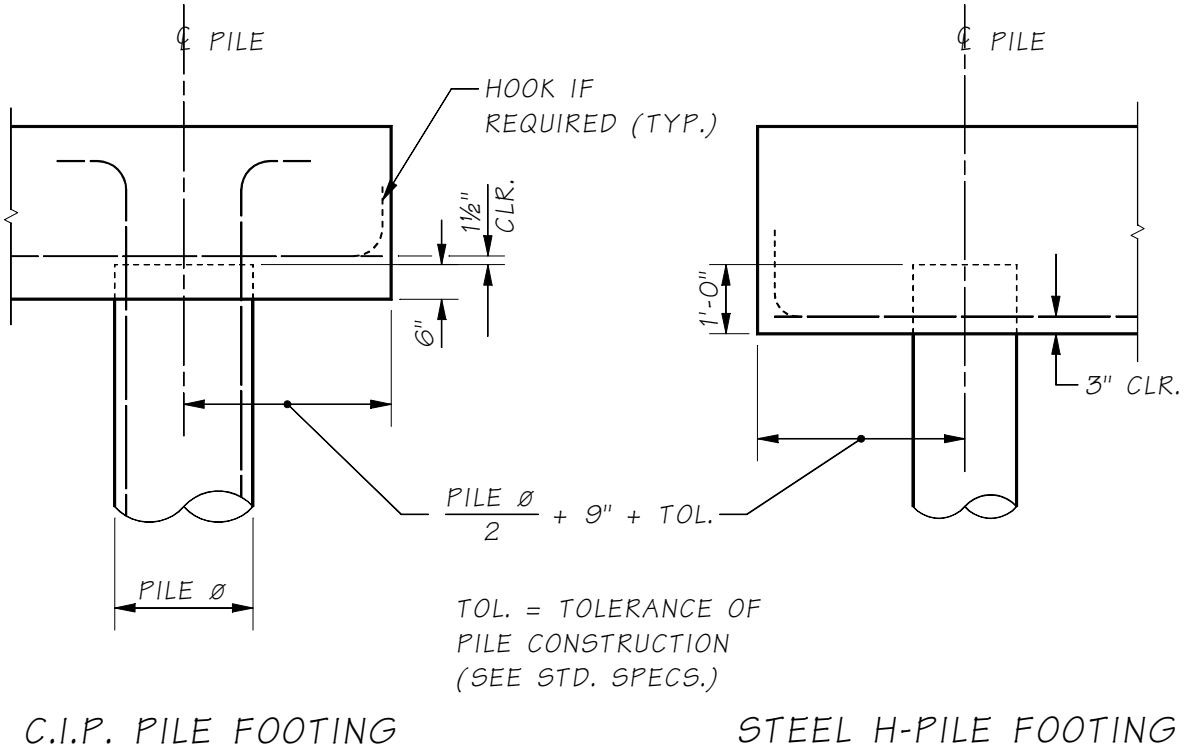

Pile Embedment and Reinforcing Placement
Figure 7.7.5-2

B. **Concrete Design –** In determining the proportion of pile load to be used for calculation of shear stress on the footing, any pile with its center 6″ or more outside the critical section shall be taken as fully acting on that section. Any pile with its center 6″ or more inside the critical section shall be taken as not acting for that section. For locations in between, the pile load acting shall be proportioned between these two extremes. The critical section shall be taken as the effective shear depth (d_v) as defined in AASHTO LRFD 5.8.2.9. The distance from the column/wall face to the allowable construction centerline of pile (design location plus or minus the tolerance) shall be used to determine the design moment of the footing. The strut and tie design method should be used where appropriate.

7.8 Drilled Shafts

7.8.1 Axial Resistance

The factored axial resistance of the drilled shaft (R) is generally composed of two parts: the nominal end bearing (R_p) and the nominal skin friction (R_s). The general formula is as follows, where φ is the limit state resistance factor.

$$R = \varphi_p R_p + \varphi_s R_s \quad (7.8.1\text{-}1)$$

The total factored shaft loading must be less than the factored axial resistance. R_p and R_s are treated as independent quantities although research has shown that the end bearing and skin friction resistance have some interdependence. R_p and R_s shown as a function of depth will be stated in the geotechnical report for the bridge.

The designer shall consider all applicable factored load combination limit states and shaft resistances when determining shaft axial capacity and demand and shaft tip elevations. For some shaft designs, liquefiable soils, scour conditions and/or downdrag forces may need to be considered. Determining which limit states to include these conditions or forces can be complex. The Hydraulics Branch and the geotechnical engineer shall be consulted to ensure overly and/or under conservative load combinations and resistances are not being considered. Open and frequent communication is essential during design.

Although the AASHTO LRFD Specifications include water loads, *WA*, in Extreme Event I limit states, in most cases the loss of soil resistance due to scour conditions is not combined with Extreme Event I load combinations. The probability of a design earthquake occurring in the presence of the maximum scour event is low. However, in some instances it is appropriate to include some scour effects. When scour is included with Extreme Event I load combinations, the skin resistance of the soil, up to a maximum of 25% of the scour depth for the design flood (l00 year event), shall be deducted from the resistance of the shaft. The loss of skin resistance for the full scour depth for the design flood shall be considered when checking axial capacity of the shaft for all strength and service limit states. The loss of skin resistance for the full scour depth of the check flood (500 year event) shall be considered when checking the axial capacity of the shaft for Extreme Event II limit states. It should be noted that scour does not produce a load effect on the structure but changes the geometry of the bridge pier and available soil resistance so that effects of other loads are amplified. The engineer may also need to consider scour effects on piers that are currently outside of the ordinary high water zones due to potential migration of rivers or streams during flood events. The Hydraulics Branch will provide guidance for these rare cases.

Downdrag forces may also need to be considered in some designs. Downdrag forces are most often caused by the placement of fill adjacent to shafts, which causes consolidation and settlement of underlying soils. This situation is applicable to service and strength limit states. Downdrag forces can also be caused by liquefaction-induced settlement caused by a seismic event. Pore water pressures build up in liquefiable soils during ground shaking, and as these pore water pressures dissipate, the soil layer(s) may settle, causing downdrag forces on the shaft to develop. These liquefaction induced downdrag forces are only considered in the Extreme Event I limit state. However, downdrag induced by consolidation settlement is never combined with downdrag forces induced by liquefaction, but are only considered separately in their applicable limit states.

The downdrag is treated as a load applied to the shaft foundations. The settling soil, whether it is caused by consolidation under soil stresses (caused, for example, by the placement of fill), or caused by liquefaction, creates a downward acting shear force on the foundations. This shear force is essentially the skin friction acting on the shaft, but reversed in direction by the settlement. This means that the skin friction along the length of the shaft within the zone of soil that is contributing to downdrag is no longer available for resisting downward axial forces and must **not** be included with the soil resistance available to resist the total downward axial (i.e., compression) loads acting on the foundation.

In general, the geotechnical engineer will provide drilled shaft soil resistance plots as a function of depth that includes skin friction along the full length of the shaft. Therefore, when using those plots to estimate the shaft foundation depth required to resist the axial compressive foundation loads, this "skin friction lost" due to downdrag must be subtracted from the resistance indicated in the geotechnical shaft resistance plots, and the downdrag load per shaft must be added to the other axial compression loads acting on the shaft.

Similarly, if scour is an issue that must be considered in the design of the foundation, with regard to axial resistance (both in compression and in uplift), the skin friction lost due to removal of the soil within the scour depth must be subtracted from the shaft axial resistance plots provided by the geotechnical engineer. If there is any doubt as to whether or not this skin friction lost must be subtracted from the shaft resistance plots, it is important to contact the geotechnical engineer for clarification on this issue. Note that if both scour and downdrag forces must be considered, it is likely that the downdrag forces will be reduced by the scour. This needs to be considered when considering combination of these two conditions, and assistance from the geotechnical engineer should be obtained.

The WSDOT *Geotechnical Design Manual* M 46-03, Chapters 6, 8 and 23, should be consulted for additional explanation regarding these issues.

Following is a summary of potential load combination limit states that shall be checked if scour effects, liquefiable soils and/or downdrag forces are included in the design. The geotechnical report will provide the appropriate resistance factors to use with each limit state.

A. Condition: Embankment downdrag from fill or the presence of compressible material below the foundations; no liquefaction.

   Checks:

   1. Include embankment induced downdrag loads with all Strength and Service Limit States. Do not include with Extreme Limit States. Use maximum load factor unless checking an uplift case, where the minimum shall be used. Subtract the skin friction lost within the downdrag zone from the shaft axial resistance plots provided by the geotechnical engineer.

B. Condition: Liquefiable soils with post-earthquake downdrag forces. No embankment downdrag. ***Note:*** If embankment downdrag is present, it shall not be included with liquefaction-induced downdrag therefore it would not be included in Check 3 below.

   Checks:

   1. Extreme Event I Limit State - Use static soil resistances (no loss of resistance due to liquefaction) and no downdrag forces. Use a live load factor of 0.5.
   2. Extreme Event I Limit State - Use reduced soil resistance due to liquefaction and no downdrag forces. Use a live load factor of 0.5. The soils in the liquefied zone will not provide the static skin friction resistance but will in most cases have a reduced resistance that will be provided by the geotechnical engineer.
   3. Extreme Event I Limit State - Post liquefaction. Include downdrag forces, a live load factor of 0.5 and a reduced post-liquefaction soil resistance provided by the geotechnical engineer. Do not include seismic inertia forces from the structure since it is a post earthquake check. There will be no skin resistance in the post earthquake liquefied zone. Therefore, subtract the skin friction lost within the downdrag zone from the shaft axial resistance plots provided by the geotechnical engineer.

C. Condition: Scour from design flood (100 year events) and check floods (500 year events.) The shaft shall be designed so that shaft penetration below the scour of the applicable flood event provides enough axial resistance to satisfy demands. Since in general the geotechnical engineer will provide shaft resistance plots that include the skin friction within the scour zone, the skin friction lost will need to be subtracted from the axial resistance plots provided to determine the shaft resistance acting below the scour depth. A special case would include scour with Extreme Event I limit states without liquefiable soils and downdrag. It is overly conservative to include liquefied soil induced downdrag and scour with the Extreme Event I limit states. The Hydraulics Branch and the geotechnical engineer will need to be consulted for this special case.

Checks:

1. Service and Strength Limit States - Subtract the skin friction lost within the scour depth (i.e., 100% of the scour depth for the 100 year design flood) from the shaft axial resistance plots provided by the geotechnical engineer, to estimate the shaft depth required to resist all service and strength limit demands.
2. Extreme Event II Limit State - Subtract the skin friction lost within the scour depth (i.e., 100% of the scour depth for the 500 year check flood event) from the shaft axial resistance plots provided by the geotechnical engineer, to estimate the shaft depth required to resist all Extreme Event II limit demands. Use a live load factor of 0.5. Do not include ice load, *IC*, vessel collision force, *CV*, and vehicular collision force, *CT*.
3. Extreme Event II Limit State - Subtract the skin friction lost within the scour depth (in this case only 50% of the scour depth for the 500 year check flood event) from the shaft axial resistance plots provided by the geotechnical engineer, to estimate the shaft depth required to resist all Extreme Event II limit demands. Use a live load factor of 0.5. In this case, include ice load, *IC*, vessel collision force, *CV*, and vehicular collision force, *CT*.
4. Extreme Event I Limit State (special case -no liquefaction) - Subtract the skin friction lost within the scour depth (i.e., in this case 25% of the scour depth for the 100 year design flood) from the shaft axial resistance plots provided by the geotechnical engineer, to estimate the shaft depth required to resist the Extreme Event I limit state demands.

The bridge plans shall include the end bearing and skin friction nominal shaft resistance for the service, strength, and extreme event limit states in the General Notes, as shown in Figure 7.8-1-1. The nominal shaft resistances presented in Figure 7.8-1-1 are not factored by resistance factors.

The Nominal Shaft Resistance shall be taken as, in kips:

Service-I Limit State		
Pier No.	**Skin Friction Resistance**	**End Bearing Resistance**
1	====	====
2	====	====

Strength Limit State		
Pier No.	**Skin Friction Resistance**	**End Bearing Resistance**
1	====	====
2	====	====

Extreme Event-I Limit State		
Pier No.	**Skin Friction Resistance**	**End Bearing Resistance**
1	====	====
2	====	====

Figure 7.8.1-1

7.8.1.1 Axial Resistance Group Reduction Factors

The group reduction factors for axial resistance of shafts for the strength and extreme event limit states shall be taken as shown in Table 7.8.1.1-1 unless otherwise specified by the geotechnical engineer. These reduction factors presume that good shaft installation practices are used to minimize or eliminate the relaxation of the soil between shafts and caving. If this cannot be adequately controlled due to difficult soils conditions or for other constructability reasons, lower group reduction factors shall be used as recommended by the geotechnical engineer. Alternatively, steps could be required during and/or after shaft construction to restore the soil to its original condition. The geotechnical engineer will provide these recommendations, which could include but is not limited to, pressure grouting of the tip, grouting along side of the shaft or full length casing.

Soil Type	Shaft Group Configuration	Shaft Center-to-Center Spacing	Special Conditions	Group Reduction factor, η
Cohesionless (Sands, gravels, etc.)	Single row	2*D*		0.90
		2.5*D*		0.95
		3*D* or more		1.0
	Multiple row	2.5*D**		0.67
		3*D*		0.80
		4*D* or more		1.0
	Single and multiple rows	2*D* or more	Shaft group cap in intimate contact with ground consisting of medium-dense or denser soil	1.0
	Single and multiple rows	2*D* or more	Full depth casing is used and augering ahead of the casing is not allowed, or pressure grouting is used along the shaft sides to restore lateral stress losses caused by shaft installation, and the shaft tip is pressure grouted	1.0
Cohesive (Clays, clayey sands, and glacially overridden, well-graded soils such as glacial till)	Single or multiple rows	2*D* or more		1.0

*Minimum spacing for multiple row configurations.

Group Reduction Factors for Axial Resistance of Shafts
Table 7.8.1.1-1

These group reduction factors apply to both strength and extreme event limit states. For the service limit state the influence of the group on settlement as required in the AASHTO specifications and the WSDOT *Geotechnical Design Manual* M 46-03 are still applicable.

7.8.2 Structural Design and Detailing

The current ADSC/WSDOT Shaft Special Provision should be reviewed as part of the design of drilled shafts. The structural design of drilled shafts is similar to column design. The following guidelines shall be followed:

A. Drilled shafts shall be designed for the lesser of the plastic forces or 1.2 times the elastic seismic forces of the column above in single column/single shaft foundations. This applies to all Seismic Design Categories (SDCs) in Washington State.

B. Concrete Class 4000P shall be specified for the entire length of the shaft, wet or dry conditions of placement.

C. When shafts are constructed in water, the concrete specified for the casing shoring seal shall be Class 4000W.

D. The assumed concrete compressive strength shall be $0.85f'_c$ for structural design of shafts. Most shafts in the State are constructed with the wet method using slurries to stabilize caving soils. A reduction in concrete strength is used to account for the unknown shaft concrete quality that results.

E. The presence of permanent steel casing shall be taken into account in the shaft design (i.e. for stiffness, and etc.), but the structural capacity of permanent steel casing shall not be considered for structural design of drilled shafts.

F. Cover requirements vary, depending on the drilled shaft diameter and shall be as specified below:

- Diameter less than or equal to 3′-0″ = 3″
- Diameter greater than 3′-0″ and less than 5′-0” = 4″
- Diameter greater than or equal to 5′-0″ = 6″

The designer should also check Section 3.05.C of the current version of the ADSC/WSDOT Shaft Special Provisions to verify no changes to the minimum cover requirements have been made.

G. In general, drilled shaft reinforcing shall be detailed to minimize congestion, facilitate concrete placement by tremie, and maximize consolidation of concrete.

H. The clear spacing between spirals and hoops shall not be less than 6″ or more than 9″, with the following exception. The clear spacing between spirals or hoops may be reduced in the splice zone in single column/single shaft connections because shaft concrete may be vibrated in this area, negating the need for larger openings to facilitate good flow of concrete through the reinforcing cage.

I. The volumetric ratio and spacing requirements of the AASHTO Seismic Specifications for confinement need not be met. The top of shafts in typical WSDOT single column/single shaft connections remains elastic under seismic loads due to the larger shaft diameter (as compared to the column). Therefore this requirement does not need to be met.

J. Shaft transverse reinforcement may be constructed as hoops or spirals. Spiral reinforcement is preferred for shaft transverse reinforcement. However, if #6 spirals at 6″ (excluding the exception in 7.8.2.H) clear do not satisfy the shear design, circular hoops may be used. Circular hoops in shafts up to #9 bars may be lap spliced using the details as shown in Figure 7.8.2-1. Circular hoops may also be fabricated using manual direct butt weld, resistance butt weld, or mechanical coupler. Weld splicing of hoops for shafts shall be completed prior to assembly of the shaft steel reinforcing cage. Refer to Section 7.4.5 of this manual for additional discussion on circular hoops. Mechanical couplers may be considered provided cover and clearance requirements are accounted for in the shaft details. When welded hoops or mechanical couplers are used, the plans shall show a staggered pattern around the perimeter of the column so that no two adjacent welded splices or couplers are located at the same location.

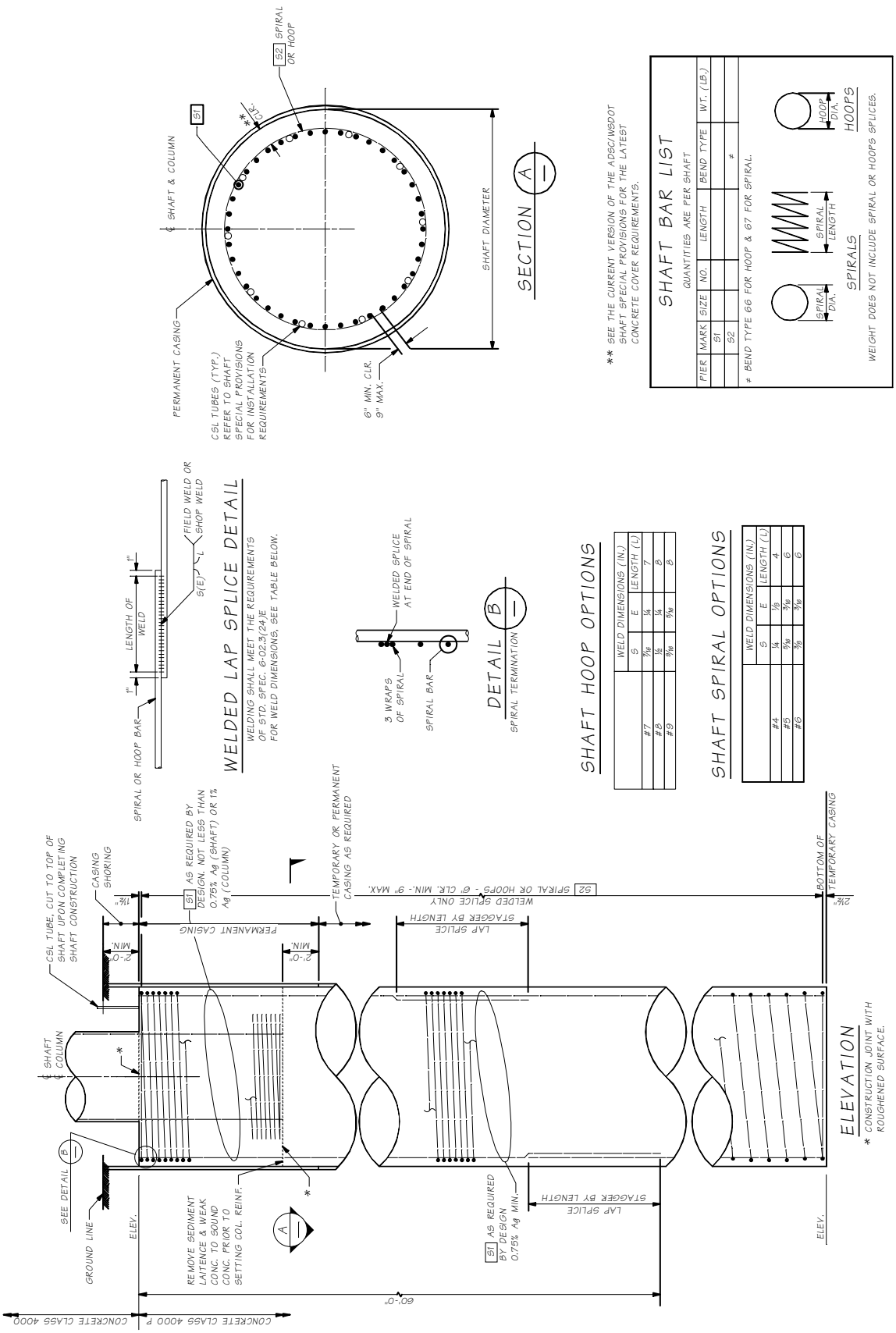

Typical Drilled Shaft Details
Figure 7.8.2-1

K. In single column/single shaft configurations, the spacing of the shaft transverse reinforcement in the splice zone shall meet the requirements of the following equation, which comes from the TRAC Report titled, "NONCONTACT LAP SPLICES IN BRIDGE COLUMN-SHAFT CONNECTIONS":

$$S_{max} = \frac{2\pi A_{sh} f_{ytr} l_s}{k A_l f_{ul}} \quad (7.8.2\text{-}1)$$

Where:

S_{max} = Spacing of transverse shaft reinforcement
A_{sh} = Area of shaft spiral or transverse reinforcement
f_{ytr} = Yield strength of shaft transverse reinforcement
l_s = Standard splice length of the column reinforcement
A_l = Area of longitudinal column reinforcement
f_{ul} = Specified minimum tensile strength of column longitudinal reinforcement (ksi), 90 ksi for A615 and 80 ksi for A706
k = Factor representing the ratio of column tensile reinforcement to total column reinforcement at the nominal resistance. This ratio could be determined from the column moment-curvature analysis using computer programs Xtract or SAP 2000. To simplify this process, $k = 0.5$ could safely be used in most applications

L. Longitudinal reinforcement shall be provided for the full length of drilled shafts. The minimum longitudinal reinforcement in the splice zone of single column/single shaft connections shall be the larger of 0.75% A_g of the shaft or 1.0% A_g of the attached column. The minimum longitudinal reinforcement beyond the splice zone shall be 0.75% A_g of the shaft. The minimum longitudinal reinforcement in shafts without single column/single shaft connections shall be 0.75% A_g of the shaft.

M. The clear spacing between longitudinal reinforcement shall not be less than 6″ or more than 9″. If a shaft design is unable to meet this minimum requirement, a larger diameter shaft shall be considered.

N. Longitudinal reinforcing in drilled shafts should be straight with no hooks to facilitate concrete placement and removal of casing. If hooks are necessary to develop moment at the top of a drilled shaft (in a shaft cap situation) the hooks should be turned toward the center of the shaft while leaving enough opening to allow concrete placement with a tremie.

O. Use of two concentric circular rebar cages shall be avoided.

P. Resistance factors for Strength Limit States shall be per the latest AASHTO LRFD Specifications. Resistance factors for Extreme Event Limit States shall be per the latest AASHTO Seismic Specifications.

Q. The axial load along the shaft varies due to the side friction. It is considered conservative, however, to design the shaft for the full axial load plus the maximum moment. The entire shaft normally is then reinforced for this axial load and moment.

R. The resistance factor for shear shall conform to the AASHTO LRFD Specifications.

S. Access tubes for Crosshole Sonic Log (CSL) testing shall be provided in all shafts. One tube shall be furnished and installed for each foot of shaft diameter, rounded to the nearest whole number, and shown in the plans. The number of access tubes for shaft diameters specified as "X feet 6 inches" shall be rounded up to the next higher whole number. The access tubes shall be placed around the shaft, inside the spiral or hoop reinforcement and three inches clear of the vertical reinforcement, at a uniform spacing measured along the circle passing through the centers of the access tubes. If the vertical reinforcement is not bundled and each bar is not more than one inch in diameter, the access tubes shall be placed two inches clear of the vertical reinforcement. If these minimums cannot be met due to close spacing of the vertical reinforcement, then access tubes shall be bundled with the vertical reinforcement.

T. Shafts shall be specified in English dimensions and shall be specified in sizes that do not preclude any drilling method. Shafts shall be specified in whole foot increments except as allowed here. The tolerances in the current ADSC/WSDOT Shaft Special Provision accommodate metric casing sizes and/or oversized English casing sizes. Oversized English casings are often used so that tooling for drilling the shafts, which are typically the nominal English diameter, will fit inside the casing. There are a few exceptions, which will be discussed below. See Table 7.8.2-1 for casing sizes and tolerances.

Column A	Column B	Column C	Column D	Column E	Column F	Column G	Column H
Nominal (Outside) English Casing Diameter		***Maximum Increase in Casing Inside Diameter**	***Maximum Decrease in Casing Inside Diameter**	**Maximum English Casing Diameter**	**Nominal (Outside) Metric Casing Diameter**		
Feet	Inches	Inches	Inches	Inches	Meters	Feet	Inches
12.0	144	6	0	150	3.73	12.24	146.85
11.0	132	6	0	138	3.43	11.25	135.0
10.0	120	6	2	126	3.00	9.84#	118.11
9.5	114	6	0	120	3.00	9.84	118.11
9.0	108	6	0	114	2.80	9.19	110.23
8.0	96	6	0	102	2.50	8.20	98.42
7.0	84	6	0	90	2.20	7.22	86.61
6.5	78	6	0	84	2.00	6.56	78.74
6.0	72	6.75##	0	78	2.00	6.56	78.74
5.5	66	6	0	72			
5.0	60	12	1	72	1.5	4.92#	59.05
4.5	54	12	0	66	1.50	4.92	59.05
4.0 **	48	12	0	60	1.5	4.92	59.05
4.0**	48	12	1	60	1.2	3.94#	47.28
3.0	36	12	0	48	1.00	3.28	39.37
3.0	36	12	0	48	0.915	3.00	36.02
2.5	30	12	0	42			
2.0	24	12	0	36	0.70	2.30	27.56

* Check the current ADSC/WSDOT Shaft Special Provision

** Construction tolerances would allow either 1.2 or 1.5 meter casing to be used

Designer shall check that undersize shaft meets the design demands

Exception to typical construction tolerance of 6″

Table 7.8.2-1

As seen in Table 7.8.2-1, construction tolerances shown in Column "C" allow shaft diameters to be increased up to 12″ for shafts 5′-0″ diameter or less and increased up to 6″ for shafts greater than 5′-0″ in diameter. In most cases these construction tolerances allow either metric or English casings to be used for installation of the shafts.

There are a few exceptions to these typical tolerances. These exceptions are as follows:

1. 4.0′ diameter shafts – The tolerances in Columns "C" and "D" of Table 7.8.2-1 allow either an oversized 4.92′ diameter shaft or an undersized 3.94′ shaft to be constructed. The reinforcement cage shall be sized to provide a minimum of 3″ of cover to the undersized diameter.
2. 5.0′ diameter shafts – The tolerances in Columns "C" and "D" of Table 7.8.2-1 allow either an oversized 6.0′ diameter shaft or an undersized 4.92′ diameter shaft to be constructed. The reinforcement cage shall be sized to provide a minimum of 4″ of cover to the undersized diameter.
3. 6.0′ diameter shafts – Maximum oversize tolerance of 6 ¾″ is allowed.
4. 10.0′ diameter shafts – The tolerances in Columns "C" and "D" of Table 7.8.2-1 allow either an oversized 10.5′ diameter shaft or an undersized 9.84′ diameter shaft to be constructed. The reinforcement cage shall be sized to provide a minimum of 4″ of cover to the undersized diameter.

For all shaft diameters, the designer should bracket the design so that all possible shaft diameters, when considering the construction tolerances, will satisfy the design demands. The minimum shaft diameter (nominal or undersized) shall be used for design of the flexural and shear reinforcement.

The nominal English shaft diameter shall be specified on the plans. When requesting shaft capacity charts from the geotechnical engineer, the designer should request charts for the nominal English shaft diameter.

U. Shafts supporting a single column shall be sized to allow for construction tolerances, as illustrated in Figure 7.8.2-2.

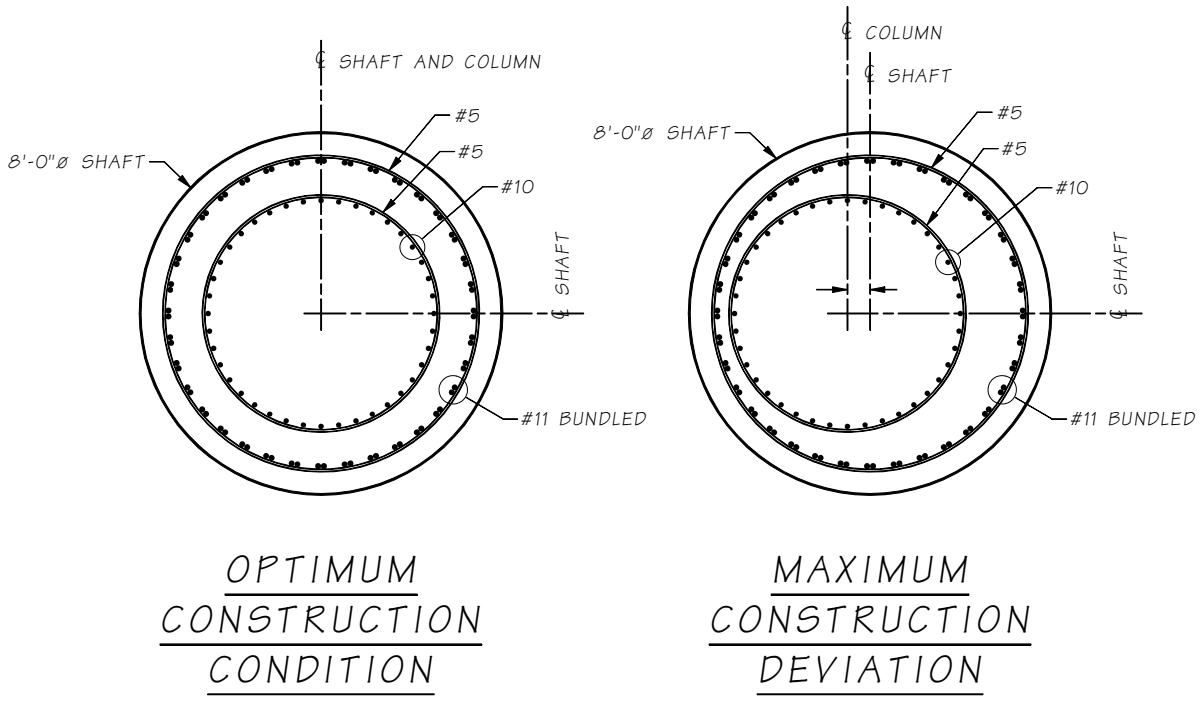

Figure 7.8.2-2

The shaft diameter shall be based on the maximum column diameter allowed by the following equation,

Maximum Column Diameter = Shaft Diameter – 2*(Shaft Concrete Cover) – 2*(Shaft Horizontal Construction Tolerance) – 2*(Shaft Cage Thickness)

The shaft horizontal construction tolerance and shaft concrete cover shall be per the current ADSC/WSDOT Shaft Special Provision.

If the column diameter used in design is larger than the maximum allowed for a given shaft size, as defined by the equation above, a larger shaft diameter shall be used.

The shaft diameter specified here should not be confused with the desirable casing shoring diameter discussed below.

V. Casing shoring shall be provided for all shafts below grade or waterline. However, casing shoring requirements are different for shafts in shallow excavations and deep excavations. Shafts in deep excavations require a larger diameter casing shoring to allow access to the top of the shaft for column form placement and removal. The top of shafts in shallow excavations (approximately 4′ or less) can be accessed from the ground line above, by reaching in or by "glory-holing", and therefore do not require larger diameter casing shoring. See Figure 7.8.2-3.

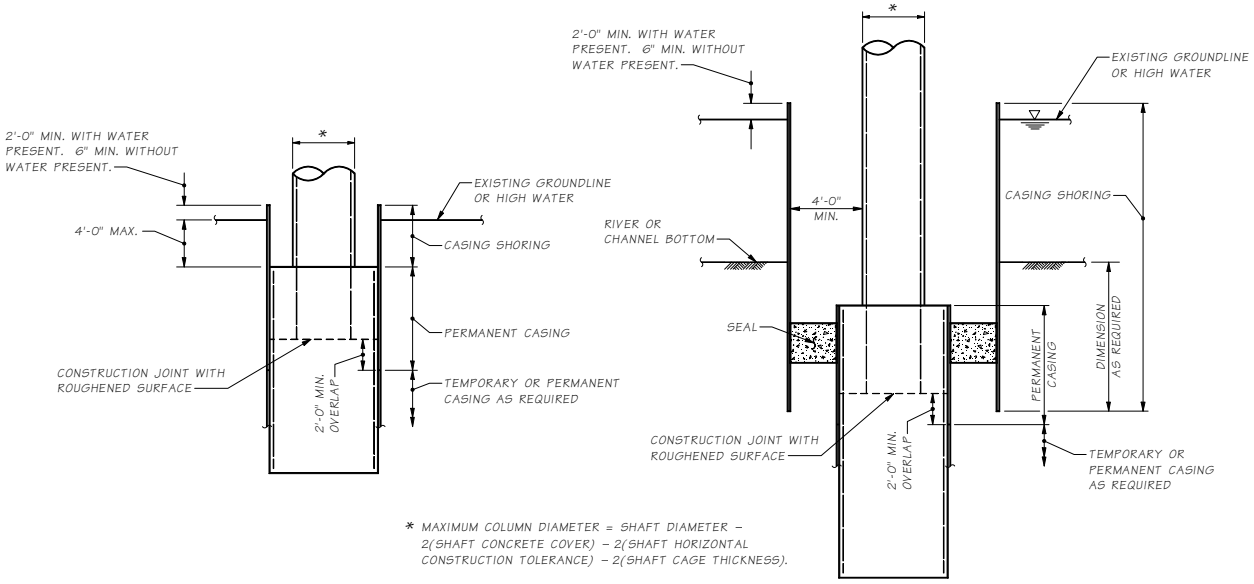

Figure 7.8.2-3

W. Changes in shaft diameters due to construction tolerances allowed in the ADSC/WSDOT Shaft Special Provision shall not result in a reinforcing steel cage diameter different from the diameter shown in the plans (plan shaft diameter minus concrete cover). For example, metric casing diameters used in lieu of English casing diameters shall only result in an increase in concrete cover, except as noted below for single column/single shaft connections requiring slip casings. There are also exceptions for 4′-0″, 5′-0″ and 10′-0″ diameter shafts, see Table 7.8.2-1.

X. Rotator and Oscillator drilling methods typically use a slip casing for permanent casing in single column/single shaft connections, as shown in Figure 7.8.2-4.

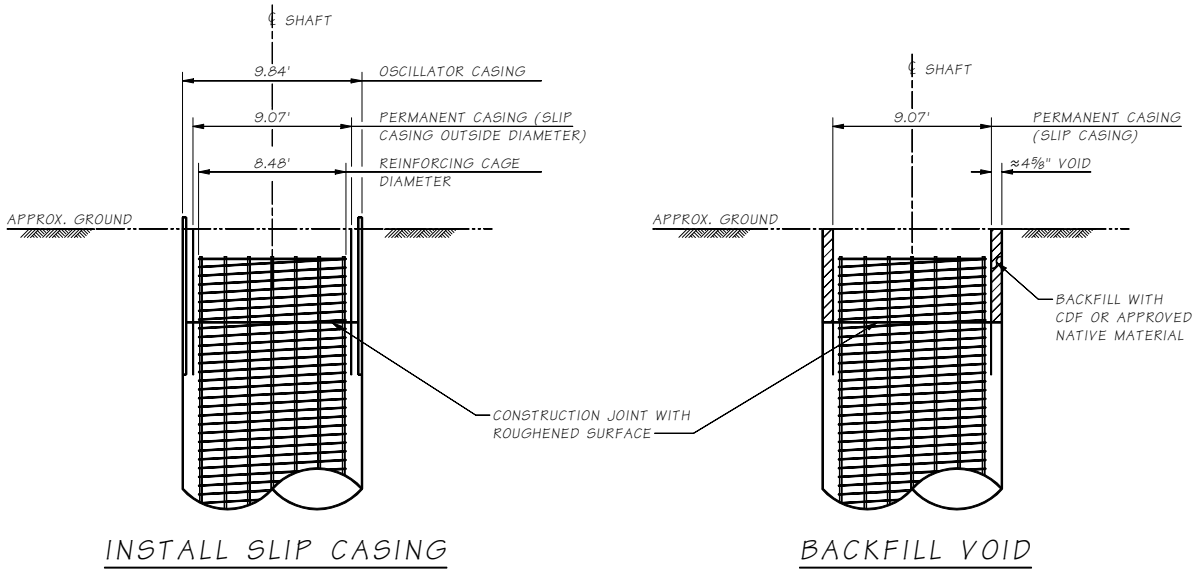

10'-0" Ø Shaft Constructed With The Oscillator Method
Figure 7.8.2-4

The use of the slip casing typically requires a modification to the reinforcing cage diameter. This should be considered during the structural design of the shaft. The slip casing also results in less concrete cover than the area of the shaft below the slip casing. See Table 7.8.2-2 for expected reinforcing cage diameters and clear cover. Shafts shall be designed such that the reduced concrete cover is acceptable in this area because the casing is permanent. A minimum of 3″ of concrete cover is achievable in this area for shafts 4′-0″diameter and larger and 1½″of cover for shafts less than 4′-0″. These concrete cover requirements shall be kept as a minimum requirement. The reduction in strength (compared to the area below the slip casing) associated with the reduced shaft diameter that results from the slip casing is bounded within the shaft analysis and design methods prescribed here and elsewhere. Therefore the reduction in strength in this area can be ignored.

Y. Reinforcing bar centralizers shall be detailed in the plans as shown in Figure 7.8.2-5. The centralizers shall be detailed as ½″ less than the concrete cover required in the current ADSC/WSDOT Shaft Special Provision.

Nominal (Outside) Metric Casing Diameter		Maximum (Outside) Reinf. Cage Diameter to Accommodate Metric Casing[1]		Inside Diameter of Metric Casing[2]	Nominal (Outside) Metric Slip Casing Diameter[3]			Cage Clearance Below Slip Casing	Cage Clearance at Slip Casing[4]
Meters	Feet	Inches	Feet	Inches	Inches	Feet	Meters	Inches	Inches
3.73	12.24	130.52	10.88	140.52	137.52	11.46	3.49	8.16	3.0
3.43	11.25	118.71	9.89	128.71	125.71	10.48	3.19	8.16	3.0
3.00	9.84	101.81	8.48	111.84	108.81	9.07	2.76	8.15	3.0
2.80	9.19	95.51	7.96	105.51	102.51	8.54	2.60	7.36	3.0
2.50	8.20	83.70	6.98	93.70	90.70	7.56	2.30	7.36	3.0
2.20	7.22	71.89	5.99	81.89	78.89	6.57	2.00	7.36	3.0
2.00	6.56	64.02	5.34	74.02	71.02	5.92	1.80	7.36	3.0
1.50	4.92	45.12	3.76	55.12	52.12	4.34	1.32	6.97	3.0
1.2	3.94	34.08	2.84	44.09	41.09	3.42	1.044	6.57	3.0
1.00	3.28	30.22	2.52	36.22	34.22	2.85	0.87	4.57	1.5
0.92	3.00	26.87	2.24	32.87	30.87	2.57	0.78	4.57	1.5

Notes:

1. Provided by Malcolm Drilling. Assumes minimum of 5″ clearance to inside of oscillator casing on 4′ and larger and uses 3″ of clearance on smaller than 4′ (1.2 meters).
2. Provided by Malcolm Drilling.
3. Provided by Malcolm Drilling. Slip casing is 3″ smaller than inside diameter of temporary casing from 1.2 meters to 3 meters. 1 meter on down is 2″ smaller in diameter.
4. Slip casing is typically ⅜″ to ½″ thick (provided by Malcolm Drilling). Cage clearance assumes ½″ thick casing.

Table 7.8.2-2

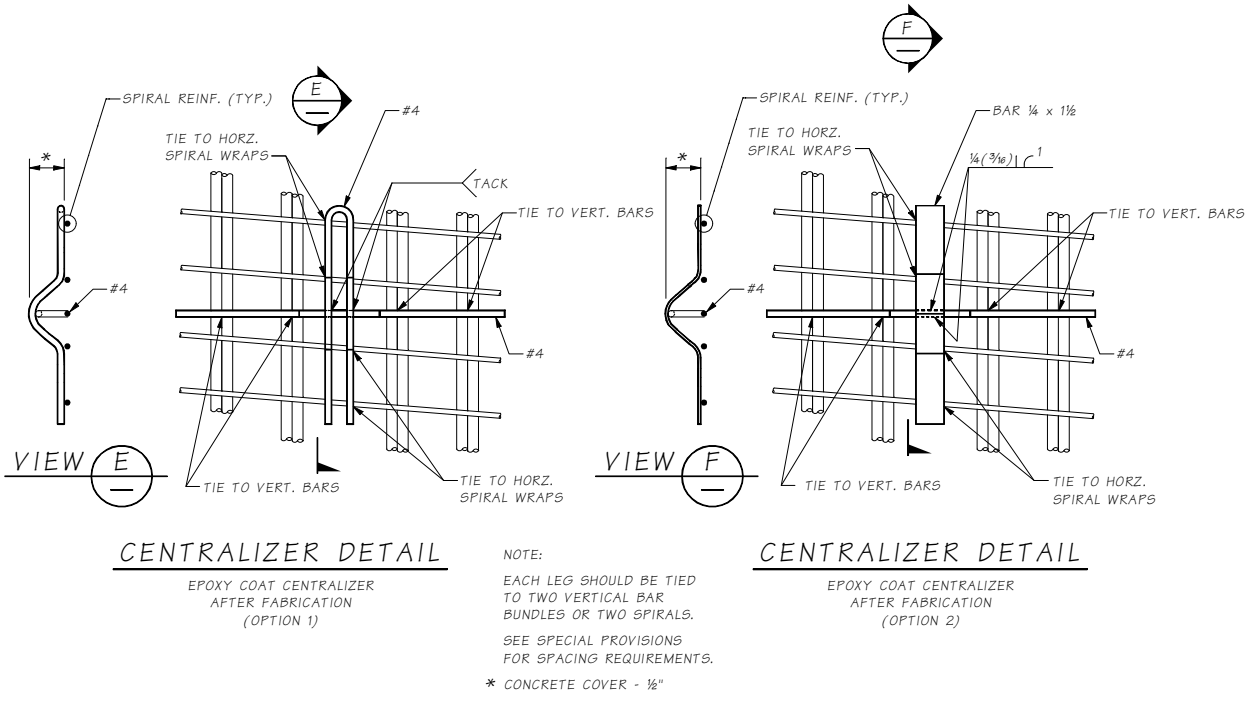

Figure 7.8.2-5

7.9 Piles and Piling

7.9.1 Pile Types

This section describes the piling used by the Bridge and Structures Office and their applications. In general, piles should not be used where spread footings can be used. However, where heavy scour conditions may occur, pile foundations should be considered in lieu of spread footings. Also, where large amounts of excavation may be necessary to place a spread footing, pile support may be more economical.

A. **Cast-in-place Concrete Piles –** Cast-in-place (CIP) concrete piles utilize driven steel pipe casings, which are then filled with reinforcing steel and concrete. The bottom of the casing is typically capped with a suitable flat plate for driving. However, the Geotechnical Branch may specify special tips when difficult driving is expected.

   The Geotechnical Branch will determine the minimum wall thickness of the steel pipe casings based on driving conditions. However, the *Standard Specifications* require the contractor to provide a wall thickness that will prevent damage during driving.

B. **Precast, Prestressed Concrete Piles** – Precast, prestressed concrete piles are octagonal, or square in cross-section and are prestressed to allow longer handling lengths and resist driving stresses. Standard Plans are available for these types of piles.

C. **Steel H Piles –** Steel piles have been used where there are hard layers that must be penetrated in order to reach an adequate point bearing stratum. Steel stress is generally limited to 9.0 ksi (working stress) on the tip. H piling can act efficiently as friction piling due to its large surface area. Do not use steel H piling where the soil consists of only moderately dense material. In such conditions, it may be difficult to develop the friction capacity of the H piles and excessive pile length may result.

D. **Timber Piles –** Timber piles may be untreated or treated. Untreated piles are used only for temporary applications or where the entire pile will be permanently below the water line. Where composite piles are used, the splice must be located below the permanent water table. If doubt exists as to the location of the permanent water table, treated timber piles shall be used.

   Where dense material exists, consideration should be given to allowing jetting (with loss of uplift capacity), use of shoes, or use of other pile types.

E. **Steel Sheet Piles –** Steel sheet piles are typically used for cofferdams and shoring and cribbing, but are usually not made a part of permanent construction.

   CIP concrete piles consisting of steel casing filled with reinforcing steel and concrete are the preferred type of piling for WSDOT's permanent bridges. Other pile types such as precast, prestressed concrete piles, steel H piles, timber piles, auger cast piles, and steel pipe piles shall not be used for WSDOT permanent bridge structures. These types of piles may be used for temporary bridges and other non-bridge applications subject to approval by the State Geotechnical Engineer and the State Bridge Design Engineer.

   Micropiles shall not be used for new bridge foundations. This type of pile may be used for foundation strengthening of existing bridges, temporary bridges and other non-bridge applications subject to approval by the State Geotechnical Engineer and the State Bridge Design Engineer.

   Battered piles shall not be used for bridge foundations to resist lateral loads.

   The above limitations apply to all WSDOT bridges including mega projects and design-build contracts.

   The above policy on pile types is the outcome of lengthy discussions and meetings between the bridge design, construction and geotechnical engineers. These limitations are to ensure improved durability, design and construction for WSDOT pile foundations.

In seismic applications there is a need for bi-directional demands. Steel H piles have proven to have little bending capacity for the purposes of resisting seismic load while circular CIP piles provide consistent capacities in all directions. Also, CIP pile casing is generally available in a full range of casing diameters. CIP piles are easily inspected after driving to ensure the quality of the finished pile prior to placing reinforcing steel and concrete. All bending strength is supplied by elements other than the casing in accordance with WSDOT *Bridge Design Manual* policy.

Precast, prestressed concrete piles, and timber piles are difficult to splice and for establishing moment connections into the pile cap.

Micropiles have little bending capacity for the purposes of resisting lateral loads in seismic applications.

7.9.2 Single Pile Axial Resistance

The geotechnical report will provide the nominal axial resistance (R_n) and resistance factor (ϕ) for pile design. The factored pile load ($P_{U\,pile}$) must be less than the factored resistance, ϕR_n, specified in the geotechnical report.

Pile axial loading ($P_{U\,pile}$) due to loads applied to a pile cap are determined as follows:

$$\left(P_{U\,pile}\right) = \left(P_{U\,pile\,group}\right)/N + M_{U\,group}\,C/I_{group} + \gamma DD \qquad (7.9.2\text{-}1)$$

Where:

$M_{U\,group}$ = Factored moment applied to the pile group. This includes eccentric *LL*, *DC*, centrifugal force (*CE*), etc. Generally, the dynamic load allowance (*IM*) does not apply.

C = Distance from the centroid of the pile group to the center of the pile under consideration.

I_{group} = Moment of inertia of the pile group

N = Number of piles in the pile group

$P_{U\,pile\,group}$ = Factored axial load to the pile group

DD = Downdrag force specified in the geotechnical report

γ = Load factor specified in the geotechnical report

Pile selfweight is typically neglected. As shown above, downdrag forces are treated as load to the pile when designing for axial capacity. However, it should not be included in the structural analysis of the bridge.

See Section 7.8.1 "Axial Resistance" of drilled shafts for discussion on load combinations when considering liquefaction, scour and on downdrag effects. These guidelines are also applicable to piles.

7.9.3 Block Failure

For the strength and extreme event limit states, if the soil is characterized as cohesive, the pile group capacity shall also be checked for the potential for a "block" failure, as described in AASHTO LRFD 10.7.3.9. This check requires interaction between the designer and the geotechnical engineer. The check is performed by the geotechnical engineer based on loads provided by the designer. If a block failure appears likely, the pile group size shall be increased so that a block failure is prevented.

7.9.4 Pile Uplift

Piles may be designed for uplift if specified in the geotechnical report. In general, pile construction methods that require preboring, jetting, or spudding must will reduce uplift capacity.

7.9.5 Pile Spacing

Pile spacing determination is typically determined collaboratively with the geotechnical engineer. The WSDOT *Geotechnical Design Manual* M 46-03 specifies a minimum center-to-center spacing of 30″ or 2.5 pile diameters. However, center-to-center spacings of less than 2.5 pile diameters may be considered on a case-by-case basis.

7.9.6 Structural Design and Detailing of CIP Concrete Piles

The structural design and detailing of CIP Concrete piles is similar to column design with the following guidelines:

A. Class 4000P Concrete shall be specified for CIP concrete piles. The top 10′ of concrete in the pile is to be vibrated. Use 1.0 f'_c for the structural design.

B. For structural design, the reinforcement alone shall be designed to resist the total moment throughout the length of pile without considering strength of the steel casing. The minimum reinforcement shall be 0.75% A_g for SDC B, C and D and shall be provided for the full length of the pile unless approved by the WSDOT Bridge Design Engineer. Minimum clearance between longitudinal bars shall meet the requirements in Chapter 5 of this manual, Figure 5-A-2.

C. If the pile to footing/cap connection is not a plastic hinge zone longitudinal reinforcement need only extend above the pile into the footing/cap a distance equal to 1.0 l_d (tension). If the pile to footing/cap connection is a plastic hinge zone longitudinal reinforcement shall extend above the pile into the footing/cap a distance equal to 1.25 l_d.

D. Since the diameter of the concrete portion of the pile is dependent on the steel casing thickness, the as-built diameter will not be known during design (since the casing thickness is determined by the contractor). As such, a casing thickness must be assumed for design. The structural engineer should work closely with the geotechnical engineer to determine a suitable casing thickness to assume based on expected driving conditions. A pile drivability analysis may be required for this. Otherwise, the following can typically be assumed:
   - ¼″ for piles less than 14″ in diameter
   - ⅜″ for piles 14″ to 18″ in diameter
   - ½″ for larger piles

E. Steel casing for CIP piling should be designated by nominal diameter, not inside diameter for 24″ and smaller pile casings. *Standard Specification* Section 9-10.5 requires steel casings to meet ASTM A252 Grade 2, which is purchased by nominal diameter (outside diameter) and wall thickness. A pipe thickness should not be stated in the plans. As stated previously, the *Standard Specifications* require the contractor to determine the pile casing thickness required for driving.

F. Transverse spiral reinforcement shall be designed to resist the maximum shear in the pile. Avoid a spiral pitch of less than 3″. The minimum spiral shall be a #4 bar at 9″ pitch. If the pile to footing/cap connection is not a plastic hinge zone the volumetric requirements of AASHTO LRFD 5.13.4.6 need not be met.

G. Resistance factors for Strength Limit States shall be per the latest AASHTO LRFD Specifications. Resistance factors for Extreme Event Limit States shall be per the latest AASHTO Seismic Specifications.

H. Piles are typically assumed to be continuously supported. Normally, the soil surrounding a foundation element provides sufficient bracing against a buckling failure. Piles that are driven through very weak soils should be designed for reduced lateral support, using information from the Geotechnical Branch as appropriate. AASHTO LRFD 10.7.4.2 may be used to estimate the column length for buckling. Piles driven through firm material normally can be considered fully supported for column action (buckling not critical) below the ground.

I. The axial load along the pile varies due to side friction. It is considered conservative, however, to design the pile for the full axial load plus the maximum moment. The entire pile is then typically reinforced for this axial load and moment.

J. In all cases of uplift, the connection between the pile and the footing must be carefully designed and detailed. The bond between the pile and the seal may be considered as contributing to the uplift resistance. This bond value shall be limited to 10 psi. The pile must be adequate to carry tension throughout its length. For example, a timber pile with a splice sleeve could not be used.

7.9.7 Pile Splices

Pile splices shall be avoided where possible. If splices may be required in timber piling, a splice shall be detailed on the plans. Splices between treated and untreated timber shall always be located below the permanent water line. Concrete pile splices shall have the same strength as unspliced piles.

7.9.8 Pile Lateral Design

The strength limit state for lateral resistance is only structural, though the determination of pile fixity is the result of soil-structure interaction. A failure of the soil does not occur; the soil will continue to displace at constant or slightly increasing resistance. Failure occurs when the pile reaches the structural limit state and this limit state is reached, in the general case, when the nominal combined bending, shear, and axial resistance is reached.

Piles resist horizontal forces by a combination of internal strength and the passive pressure resistance of the surrounding soil. The capacity of the pile to carry horizontal loads should be investigated using a soil/structural analysis. For more information on modeling individual piles or pile groups, see Section 7.2, Foundation Modeling and Section 7.2.6 Lateral Analysis of Piles and Shafts.

7.9.9 Battered Piles

As stated previously, battered piles shall not be used to resist lateral loads for new bridge foundations. Where battered piles are used, the maximum batter shall be 4½:12. Piles with batters in excess of this become very difficult to drive and the bearing values become difficult to predict. Ensure that battered piling do not intersect piling from adjacent footings within the maximum length of the piles.

7.9.10 Pile Tip Elevations and Quantities

Pile length quantities provided to PS&E are based on the estimated tip elevation given in the geotechnical report or the depth required for design whichever is greater. If the estimated tip elevation given in the geotechnical report is greater than the design tip elevation, overdriving the pile will be required. The geotechnical engineer shall be contacted to evaluate driving conditions. Bridge Special Provision BSP050311D5.FB6 is required in the Special Provisions to alert the contractor of the additional effort needed to drive these piles.

Minimum pile tip elevations provided in the geotechnical report may need to be adjusted to lower elevations depending on the results of the lateral, axial, and uplift analysis. This would become the minimum pile tip elevation requirement for the contract specifications. If adjustment in the minimum tip elevations is necessary, or if the pile diameter needed is different than what was assumed for the geotechnical report, the Geotechnical Branch MUST be informed so that pile drivability can be re-evaluated.

Note that lateral loading and uplift requirements may influence (possibly increase) the number of piles required in the group if the capacity available at a reasonable minimum tip elevation is not adequate. This will depend on the soil conditions and the loading requirements. For example, if the upper soil is very soft or will liquefy, making the minimum tip elevation deeper is unlikely to improve the lateral response of the piles enough to be adequate. Adding more piles to the group or using a larger pile diameter to increase the pile stiffness may be the only solution.

7.9.11 Plan Pile Resistance

The Bridge Plan General Notes shall list the Ultimate Bearing Capacity (Nominal Driving Resistance, R_{ndr}) in tons. This information is used by the contractor to determine the pile casing thickness and size the hammer to drive the piles. The resistance for several piers may be presented in a table as shown in Figure 7.9.12-1. If overdriving the piles is required to reach the minimum tip elevation, the estimated amount of overdriving (tons) shall be specified in the Special Provisions with BSP050311D5.FB6.

THE PILES SHALL BE DRIVEN TO AN ULTIMATE BEARING CAPACITY AS FOLLOWS:	
PIER NO.	**ULTIMATE BEARING CAPACITY (TONS)**
1	====
4	====

Figure 7.9.12-1

The total factored pile axial loading must be less than ϕR_n for the pile design. Designers should note that the driving resistance might be greater than the design loading for liquefied soil conditions. This is not an overdriving condition. This is due to the resistance liquefied soils being ignored for design, but included in the driving criteria to place the piles.

Method II (Technique I) - Matrix Coefficient Definitions

The stiffness matrix, shown in Figure 7-B1-2, containing the spring values and using the standard coordinate system is shown in Figure 7-B1-1. The sign of all the terms must be determined based on the sign convention.

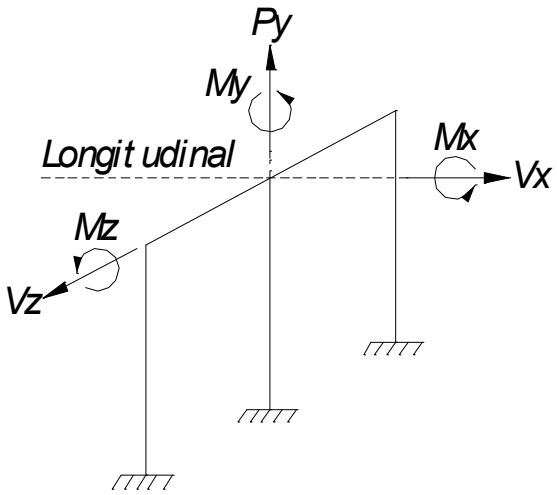

Global Coordinate System
Figure 7-B1-1

$$\begin{Bmatrix} & Vx & Py & Vz & Mx & My & Mz \\ Vx & K11 & 0 & 0 & 0 & 0 & K16 \\ Py & 0 & K22 & 0 & 0 & 0 & 0 \\ Vz & 0 & 0 & K33 & K34 & 0 & 0 \\ Mx & 0 & 0 & K43 & K44 & 0 & 0 \\ My & 0 & 0 & 0 & 0 & K55 & 0 \\ Mz & K61 & 0 & 0 & 0 & 0 & K66 \end{Bmatrix} \times \begin{Bmatrix} Disp. \\ \Delta x \\ \Delta y \\ \Delta z \\ \theta x \\ \theta y \\ \theta z \end{Bmatrix} = \begin{Bmatrix} Force \\ Vx \\ Py \\ Vz \\ Mx \\ My \\ Mz \end{Bmatrix}$$

Standard Global Matrix
Figure 7-B1-2

Where the linear spring constants or K values are defined as follows using the Global Coordinates:

K11 = $+V_{x(app)}/+\Delta_x$ = Longitudinal Lateral Stiffness (kip/in)
K22 = AE/L = Vertical or Axial Stiffness (k/in)
K33 = $-V_{z(app)}/-\Delta_z$ = Transverse Lateral Stiffness (k/in)
K44 = $+M_{x(app)}/+\theta_x$ = Transverse Bending or Moment Stiffness (kip-in/rad)
K55 = JG/L = Torsional Stiffness (kip-in/rad)
K66 = $+M_{z(app)}/+\theta_z$ = Longitudinal Bending or Moment Stiffness (kip-in/rad)
K34 = $-V_{z(ind)}/+\theta_x$ = Transverse Lateral Cross-couple term (kip/rad)
K16 = $+V_{x(ind)}/+\theta_z$ = Longitudinal Lateral Cross-couple term (kip/rad)
K43 = $+M_{x(ind)}/-\Delta_z$ = Transverse Moment Cross-couple term (kip-in/in)
K61 = $+M_{z(ind)}/+\Delta_x$ = Longitudinal Moment Cross-couple term (kip-in/in)

Fixed Head vs. Free Head Spring Calculations

Fixed Head

If the shear and moment are creating deflection in OPPOSING directions where the spring is located, a fixed head boundary condition is required to model the loaded foundation in a finite element model. See Figure 7-B1-3 for the fixed head coordinate system assumed in the following spring calculations.

Since applying load to a fixed end results in no reaction, a soil/structure interaction analysis will generally analyze the shear and moment simultaneously as a free head. Using the soil response results, a cross-couple correction term will be required in a FEM to produce the induced moment in the element modeling the fixed head condition. If accurate stresses in fixed head element are not required, the cross-couple term may be omitted.

There are two ways to model fixed head pile group. The most common method for a column footing is to use a group spring to model a group of piles or shafts as one set of springs. This method uses six linear springs to represent the foundation behavior. Lateral loads resisted by Cross-couples terms do not apply and individual pile loads must be calculated from the FEM results.

The second method would be to model the individual piles. This is more helpful for analyzing local stresses in the foundation cap element and for each pile. Cross-couple terms may be included and individual pile loads are generated in the FEM.

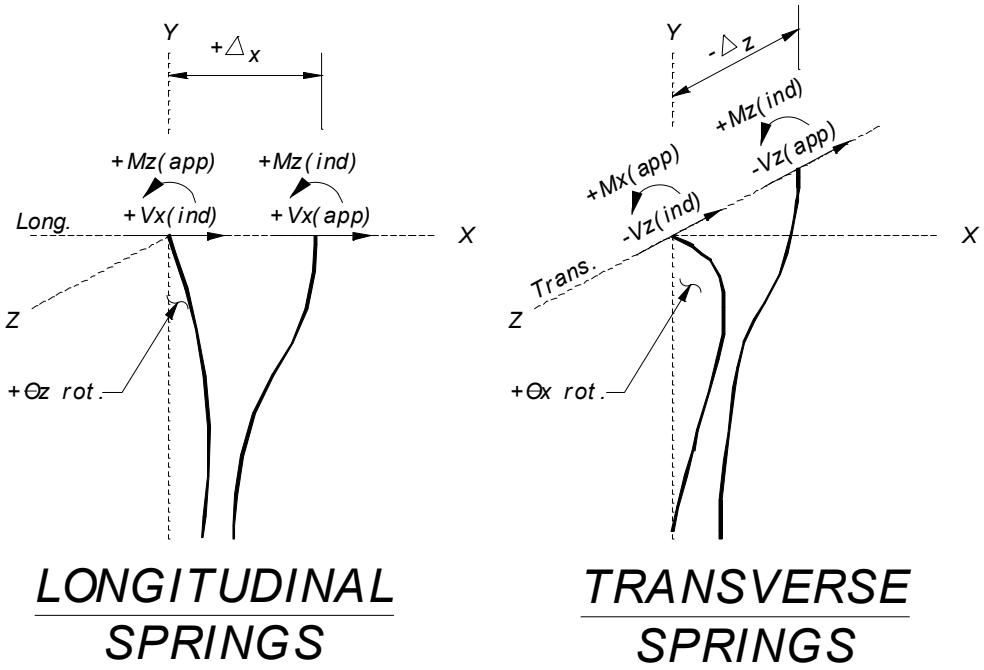

Fixed Head Coordinate System
Figure 7-B1-3

Free Head

If the shear and moment are creating deflection in the SAME direction where the spring is located, a free head boundary condition is required to model the loaded foundation in a finite element model. If a free head boundary condition is assumed Method II (Technique II) described in Section 7.2.5 of this manual must be used.

Vertical Springs (K22)

Vertical spring constants can be calculated from the following three assumptions. See Figure 7-B1-4 and the following definitions. REF: Seismic Design of Highway Bridges Workshop Manual, Pub. No. FHWA-IP-81-2, Jan 1981.

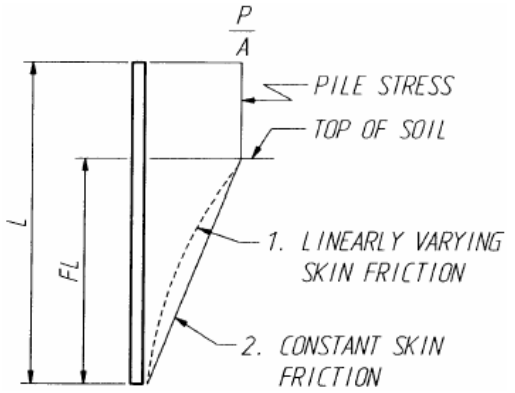

A = Cross-sectional area (in^2)
E = Young's modulus (ksi)
L = Length of pile (in)
F = Fraction of pile embedded

Pile Stress
Figure 7-B1-4

Point Bearing Piles:

$$K22 = \frac{AE}{L}$$

Friction Piles with linearly varying skin friction:

$$K22 = \frac{AE}{\left(1-\frac{2F}{3}\right)L}, with\ F = 1.0\ (fully\ embedded), K22 = 3\frac{AE}{L}$$

Friction Piles with constant skin friction:

$$K22 = \frac{AE}{\left(1-\frac{F}{2}\right)L}, with\ F = 1.0\ (fully\ embedded), K22 = 2\frac{AE}{L}$$

Torsional Springs (K55)

The DFSAP program calculates acceptable torsional spring values for shafts and may be used for foundation springs. In general, torsional spring constants for individual piles are based on the strength of the pile. The statics equation for torsional resistance is given below.

$$K55 = \frac{M}{\varphi} = \frac{T}{\varphi} = \frac{JG}{L}$$

Where:

G = 0.4E
J = Torsional moment of inertia
L = Length of pile

Lateral Springs (K11 & K33)

A fixed head lateral spring can be found by applying the shear and axial load in a soil response program with the rotation at the top equal to zero and finding the lateral deflection that results. The spring value is the applied shear divided by the resulting deflection.

$$K11 = \frac{V_{x(app)}}{\Delta_x}\ (longitudinal) \qquad K33 = \frac{V_{z(app)}}{-\Delta_z}\ (transverse)$$

Rotational Springs (K44 & K66)

Ideally a fixed head boundary condition would result in no rotation. Therefore K44 & K66 would be infinitely stiff.

In the past, the fixed head rotational springs where found by applying the moment and axial load in a soil response program with the translation at the top equal to zero and finding the rotation that results. The spring value is the applied moment divided by the resulting rotation.

$$K66 = \frac{M_{z(app)}}{\theta_z}\ (longitudinal) \qquad K44 = \frac{MV_{x(app)}}{\theta_x}\ (transverse)$$

Cross-Couple Springs (K16, K34, K43 & K61)

Fixed Head

Cross-couple springs will not be symmetric for non-linear modeling foundation modeling. Since finite element programs will use matrix multiplication to generate reactions, doing the math is the easy way to show the effect of cross-couple terms. Note that K16 and K34 terms will have opposite signs.

$$\begin{Bmatrix} & Vx & Py & Vz & Mx & My & Mz \\ Vx & K11 & 0 & 0 & 0 & 0 & K16 \\ Py & 0 & K22 & 0 & 0 & 0 & 0 \\ Vz & 0 & 0 & K33 & K34 & 0 & 0 \\ Mx & 0 & 0 & K43 & K44 & 0 & 0 \\ My & 0 & 0 & 0 & 0 & K55 & 0 \\ Mz & K61 & 0 & 0 & 0 & 0 & K66 \end{Bmatrix} \times \begin{Bmatrix} Disp. \\ \Delta x \\ \Delta y \\ \Delta z \\ \theta x \\ \theta y \\ \theta z \end{Bmatrix} = \begin{Bmatrix} Force \\ Vx \\ Py \\ Vz \\ Mx \\ My \\ Mz \end{Bmatrix}$$

The longitudinal reactions are:

$$V_x = K11 \cdot \Delta_x + K16 \cdot \theta_z \; and \; M_z = K61 \cdot \Delta_x + K66 \cdot \theta_z$$

The transverse reactions are:

$$V_z = K33 \cdot \Delta_z + K34 \cdot \theta_x \; and \; M_x = K43 \cdot \Delta_z + K44 \cdot \theta_x$$

For a true fixed head boundary condition (translation only) in the X and Z directions, there will be no rotation about the X and Z axis. θ_x and θ_z will be zero (or approach zero). This means the K34 and K16 cross-couple terms will not affect the shear reactions. Likewise, the K66 and K44 rotational terms zero out and do not affect the moment reaction. This leaves the K61 and K43 cross-couple terms to generate induced moments based on the deflections in the X and Z directions. Designers should note, the cross-couple moments are applied to a fixed footing element and are resisted axially by the piles. This affects the local stress in the footing and axial loading of the pile much more than the column moment and shear, which is usually the primary focus for design.

K11 and K66 (or K33 and K44) alone do not predict the shape or reaction of the foundation element. The cross-couple term K16 (or K34) will add a shear force to correct the applied moment deflection.

Modeling real life features may be somewhat different than the theoretically true fixed condition. The top of a column at the superstructure or some pile and shaft applications may have opposing shear and moment, however the moment may be much less than the theoretical induced free head moment value. In other words, there may be significant rotations that need to be accounted for in the spring modeling. Designers need to be aware of this situation and use engineering judgment. The FEM would have rotations about the X and Z axis. θ_x and θ_z will NOT be zero and both the cross-couples terms and rotational springs may significantly affect the analysis.

The spring value for the lateral cross-couple term is the induced shear divided by the associated rotation.

$$K16 = \frac{V_{x(ind)}}{\theta_z} \; (longitudinal) \qquad K34 = \frac{V_{z(ind)}}{\theta_x} \; (transverse)$$

The spring value for the moment cross-couple term is the induced shear divided by the associated rotation.

$$K61 = \frac{M_{x(ind)}}{-\Delta_z} \; (longitudinal) \qquad K43 = \frac{M_{z(ind)}}{-\Delta_x} \; (transverse)$$

Method III – Non-Linear Springs

A finite element model may use non-linear springs based on *PY* curves to represent foundation response as shown in Figure 7-B2-1. *PY* curves graph the relationship between the lateral soil resistance and the associated deflection of the soil. Generally, *P* stands for a force per unit length (of pile) such as kips per inch. *Y* is the corresponding horizontal deflection (of pile) in units such as inches.

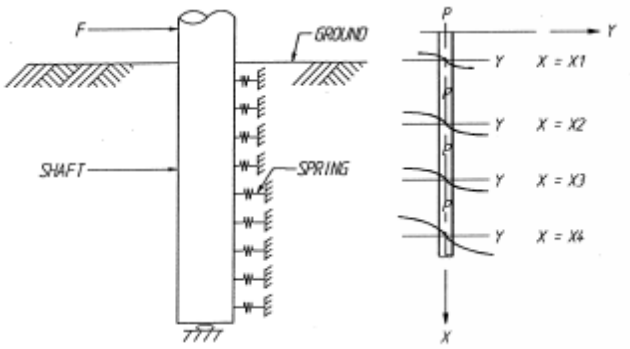

Pile Model Using a Set of Non-linear *PY* Curves
Figure 7-B2-1

Node placement for springs should attempt to imitate the soil layers. Generally, the upper ⅓ of the pile in stiff soils has the most significant contribution to the lateral soil reaction. Springs in this region should be spaced at most 3 feet apart. Spacing of 2.5 feet has demonstrated results within 10% of Lpile output moment and shear. Springs for the lower ⅔ of the pile can transition to a much larger spacing. Stiff foundations in weak soils will transfer loads much deeper in the soil and more springs would be sensible.

Transverse and longitudinal springs must include group reduction factors to analyze the structure/soil response. Soil properties are modified in Lpile to account for Group Effects. Lpile then generates *PY* curves based on the modified soil properties and desired depths. See Section 7.2.5 of this manual for Group Effects.

FEM programs will accept non-linear springs in a Force (*F*) vs. Deflection (*L*) format. *P* values in a *PY* curve must be multiplied by the pile length associated with the spring in the FEM. This converts a *P* value in Force/Length units to Force. This cannot be done during dynamic analysis with some FEM programs (including GTStrudl).

Soil Modulus - E_S

Soil Modulus is defined as the force per length (of a pile) associated with a soil deflection. As shown in Figure 7-B2-2, E_S is a slope on the PY curve or P/Y. E_S is a secant modulus since the PY relationship is nonlinear and the modulus is a constant. The units are F/L per L or F/L^2, such as kips per square inch.

Subgrade Modulus - k_S

A closely related term is the Subgrade Modulus (or Modulus of Subgrade Reaction) provided in a geotechnical report. This is defined as the soil pressure associated with a soil deflection.
The units are F/L^2 per L or F/L^3, such as kips per cubic inch.

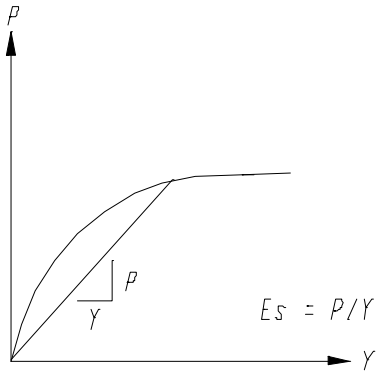

Secant Modulus Illustration
Figure 7-B2-2

Method II (Technique I) – Pile Footing Matrix Example

A matrix with cross-couple terms is a valid method to model pile supported footings. The analysis assumes the piles will behave similar to a column fixed at the bottom (in the soil) with lateral translation only at the top (no rotation). This requires Fixed Head Boundary Condition to calculate spring values.

The Lpile program will solve for non-linear soil results for individual piles. See Group Effects in Section 7.2.5 of this manual to reduce the soil properties of a pile in a group in both the transverse and longitudinal directions. This sample matrix calculates a foundation spring for an individual pile.

If a pile group has a large number of piles, the GPILE computer program is available to generate a spring matrix for the group. The program also computes individual pile loads and deflections from input loads. The output will contain a SEISAB {6 x 6} stiffness matrix. GTStrudl or SAP matrices have the same coefficients with a different axis orientation for the pile group.

The pile spring requires eight pile stiffness terms for a matrix as discussed in Appendix 7-B1. The following sample calculations discuss the lateral, longitudinal, and cross-couple spring coefficients for a GTStrudl local coordinate system. See Appendix 7-B1 for axial and torsion springs.

The maximum FEM transverse and longitudinal seismic loads (*Vy*, *Mz*, *Vz*, *My* and axial *Px*) provide two loads cases for analysis in Lpile. The Lpile results of these two load cases will be used to calculate lateral, longitudinal, and cross-couple spring coefficients.

This sample calculation assumes there are no group effects. Only the longitudinal direction will be calculated, the transverse direction will be similar. A standard global coordinate system is assumed for the bridge. This sample will also assume a GTStrudl element is used to provide the foundation spring, which requires a different local axis coordinate system to input matrix terms, as shown in Figure 7-B3-1. When the coordinate system changes, the sign convention of shear and moment also will change. This will be expressed in a 6x6 matrix by changing the location of the spring values and in sign of any cross-couple terms.

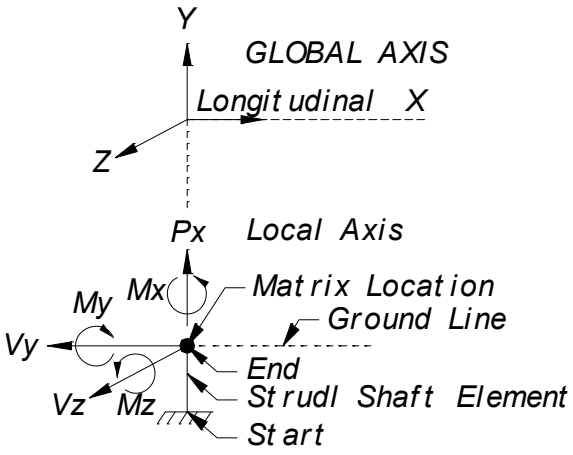

GTStrudl Local Axis Coordinate System

The locations of GTStrudl matrix terms are shown in Figure 7-B1-2. The displacements are local and this requires the spring coefficients to be moved to produce the correct local reactions. The X axis is the new vertical direction. The Y axis is the new longitudinal direction. The spring coefficient definitions and notation remains the same as defined in Appendix 7-B1. Note the shift in diagonal terms and locations of the cross-couple terms.

$$\begin{Bmatrix} & Px & Vy & Vz & Mx & My & Mz \\ Px & K22 & 0 & 0 & 0 & 0 & 0 \\ Vy & 0 & K11 & 0 & 0 & 0 & K16 \\ Vz & 0 & 0 & K33 & 0 & K34 & 0 \\ Mx & 0 & 0 & 0 & K55 & 0 & 0 \\ My & 0 & 0 & K43 & 0 & K44 & 0 \\ Mz & 0 & K61 & 0 & 0 & 0 & K66 \end{Bmatrix} \times \begin{Bmatrix} Disp. \\ \Delta x \\ \Delta y \\ \Delta z \\ \theta x \\ \theta y \\ \theta z \end{Bmatrix} \equiv \begin{Bmatrix} Force \\ Px \\ Vy \\ Vz \\ Mx \\ My \\ Mz \end{Bmatrix}$$

GTStrudl Matrix in Local Coordinate System
Figure 7-B3-2

Where the linear spring constants or K values are defined as follows (see Figure 7-B3-3 for direction and sign convention):

K11 = $-V_{y(app)}/-\Delta_y$ = Longitudinal Lateral Stiffness (kip/in)
K22 = AE/L = Vertical or Axial Stiffness (k/in)
K33 = $-V_{z(app)}/-\Delta_z$ = Transverse Lateral Stiffness (k/in)
K44 = $-M_{y(app)}/-\theta_y$ = Transverse Bending or Moment Stiffness (kip-in/rad)
K55 = JG/L = Torsional Stiffness (kip-in/rad)
K66 = $M_{z(app)}/\theta_z$ = Longitudinal Bending or Moment Stiffness (kip-in/rad)
K34 = $-V_{z(ind)}/-\theta_y$ = Transverse Lateral Cross-couple term (kip/rad)
K16 = $-V_{y(ind)}/+\theta_z$ = Longitudinal Lateral Cross-couple term (kip/rad)
K43 = $-M_{y(ind)}/-\Delta_z$ = Longitudinal Moment Cross-couple term (kip-in/in)
K61 = $+M_{z(ind)}/-\Delta_y$ = Transverse Moment Cross-couple term (kip-in/in)

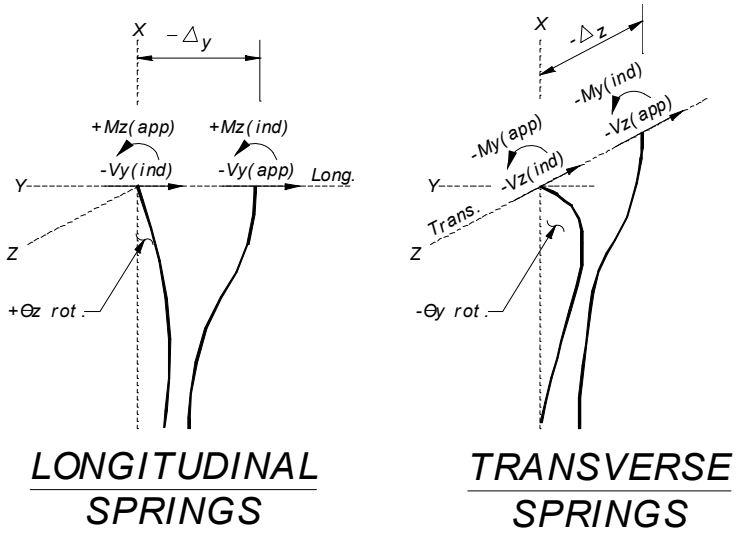

GTStrudl Local Coordinate System
Figure 7-B3-3

Results from GTStrudl (local coordinate system)

P_x = 50,000 lbs (axial load)
V_y = -60,000 lbs (shear along longitudinal axis)
V_z = -40,000 lbs (shear along transverse axis)
M_y = -2,230,000 lb-in (moment about longitudinal axis)
M_z = 3,350,000 lb-in (moment about transverse axis)

Load Case 1 - Longitudinal Direction

Load Case 1 applies the lateral load (V_y) and axial load (P_x), and restrains the top against rotation (slope = 0 rad).

Input to Lpile:

Boundary condition code	=	2
Lateral load at the pile head	=	-60000.000 lbs
Slope at the pile head	=	0.000 in/in
Axial load at the pile head	=	50000.000 lbs

Output from Lpile:

X (in)	Deflection Δ_y (in)	Moment $M_{z(ind)}$ (lbs-in)	Shear $V_{y(app)}$ (lbs)	Slope (Rad.)
0.000	-0.13576	3.761E+06	-60000.000	0.000000

Load Case 2 - Longitudinal Direction

Load case 2 applies the moment load (M_z) and axial load (P_x), and restrains the top against deflection (deflection = 0 rad).

Input to Lpile:

Boundary condition code	=	4
Deflection at the pile head	=	0.000 in
Moment at the pile head	=	3.350E+06 in-lbs
Axial load at the pile head	=	50000.000 lbs

Output from Lpile:

X (in)	Deflection (in)	Moment $M_{z(ind)}$ (lbs-in)	Shear $V_{y(ind)}$ (lbs)	Slope θ_z (Rad.)
0.000	0.00000	3.350E+06	-33027.667	0.001192

Springs Constants – Longitudinal Direction

K11 = $-V_{y(app)}/-\Delta_y$ = -60 kip/-0.13576 in = 442 kip/in
K66 = $M_{z(app)}/\theta_z$ = 3,350 kip-in/0.001192 rad = 2,810,403 kip-in/rad
K16 = $-V_{y(ind)}/+\theta_z$ = -33 kip/0.001192 rad = -27,685 kip/rad
K61 = $+M_{z(ind)}/-\Delta_y$ = 3,761 kip-in/-0.13576 in = -27,703 kip-in/in

$$\begin{Bmatrix} & \text{Px} & \text{Vy} & \text{Vz} & \text{Mx} & \text{My} & \text{Mz} \\ \text{Px} & \text{K22} & 0 & 0 & 0 & 0 & 0 \\ \text{Vy} & 0 & 442\,\frac{\text{kip}}{\text{in}} & 0 & 0 & 0 & -27{,}685\,\frac{\text{kip}}{\text{rad}} \\ \text{Vz} & 0 & 0 & \text{K33} & 0 & \text{K34} & 0 \\ \text{Mx} & 0 & 0 & 0 & \text{K55} & 0 & 0 \\ \text{My} & 0 & 0 & \text{K43} & 0 & \text{K44} & 0 \\ \text{Mz} & 0 & -27{,}703\,\frac{\text{kip}-\text{in}}{\text{in}} & 0 & 0 & 0 & 2{,}810{,}403\,\frac{\text{kip}-\text{in}}{\text{rad}} \end{Bmatrix} \times \begin{Bmatrix} \text{Disp.} \\ \Delta\text{x} \\ \Delta\text{y} \\ \Delta\text{z} \\ \theta\text{x} \\ \theta\text{y} \\ \theta\text{z} \end{Bmatrix} \equiv \begin{Bmatrix} \text{Force} \\ \text{Px} \\ \text{Vy} \\ \text{Vz} \\ \text{Mx} \\ \text{My} \\ \text{Mz} \end{Bmatrix}$$

Chapter 8 Walls & Buried Structures Contents

8.1 Retaining Walls 8.1-1
8.1.1 General 8.1-1
8.1.2 Common Types of Walls 8.1-1
8.1.3 Design 8.1-3
8.1.4 Miscellaneous Items 8.1-8

8.2 Miscellaneous Underground Structures 8.2-1
8.2.1 General 8.2-1
8.2.2 Design 8.2-1
8.2.3 References 8.2-4

Appendix 8.1-A1 Summary of Design Specification Requirements for Walls 8.1-A1-1
Appendix 8.1-A2-1 SEW Wall Elevation 8.1-A2-1
Appendix 8.1-A2-2 SEW Wall Section 8.1-A2-2
Appendix 8.1-A3-1 Soldier Pile/Tieback Wall Elevation 8.1-A3-1
Appendix 8.1-A3-2 Soldier Pile/Tieback Wall Details 1 of 2 . . . . . 8.1-A3-2
Appendix 8.1-A3-3 Soldier Pile/Tieback Wall Details 1 of 2 . . . . . 8.1-A3-3
Appendix 8.1-A3-4 Soldier Pile/Tieback Wall Details 2 of 2 . . . . . 8.1-A3-4
Appendix 8.1-A3-5 Soldier Pile/Tieback Wall Fascia Panel Details 8.1-A3-5
Appendix 8.1-A3-6 Soldier Pile/Tieback Wall Permanent Ground Anchor Details 8.1-A3-6
Appendix 8.1-A4-1 Soil Nail Layout 8.1-A4-1
Appendix 8.1-A4-2 Soil Nail Wall Section 8.1-A4-2
Appendix 8.1-A4-3 Soil Nail Wall Fascia Panel Details 8.1-A4-3
Appendix 8.1-A5-1 Noise Barrier on Bridge 8.1-A5-1
Appendix 8.1-A6-1 Cable Fence – Side Mount 8.1-A6-1
Appendix 8.1-A6-2 Cable Fence – Top Mount 8.1-A6-2

8.1 Retaining Walls

8.1.1 General

A retaining wall is a structure built to provide lateral support for a mass of earth or other material where a grade separation is required. Retaining walls depend either on their own weight, their own weight plus the additional weight of laterally supported material, or on a tieback system for their stability. Additional information is provided in Chapter 15 of the WSDOT *Geotechnical Design Manual* M 46-03.

Standard designs for reinforced concrete cantilevered retaining walls, noise barrier walls (precast concrete, cast-in-place concrete, or masonry), and geosynthetic walls are shown in the Standard Plans. The Region Design PE Offices are responsible for preparing the PS&E for retaining walls for which standard designs are available, in accordance with the WSDOT *Design Manual* M 22-01. However, the Bridge and Structures Office may prepare PS&E for such standard type retaining walls if such retaining walls are directly related to other bridge structures being designed by the Bridge and Structures Office.

Structural earth wall (SE) systems meeting established WSDOT design and performance criteria have been listed as "pre-approved" by the Bridge and Structures Office and the Materials Laboratory Geotechnical Branch. The PS&E for "pre-approved" structural earth wall systems shall be coordinated by the Region Design PE Office with the Bridge and Structures Office, and the Materials Laboratory Geotechnical Branch, in accordance with WSDOT *Design Manual* M 22-01.

The PS&E for minor non-structural retaining walls, such as rock walls, gravity block walls, and gabion walls, are prepared by the Region Design PE Offices in accordance with the WSDOT *Design Manual* M 22-01, and any other design input from the Region Materials Offic, Materials Laboratory Geotechnical Branch or Geotechnical Engineer.

All other retaining walls not covered by the Standard Plans such as soil nail walls, soldier pile walls, soldier pile tieback walls and all walls beyond the scope of the designs tabulated in the Standard Plans, are designed by the Bridge and Structures Office according to the design parameters provided by the Geotechnical Engineer.

The Hydraulics Branch of the Design Office should be consulted for walls that subject to floodwater or are located in a flood plain. The State Bridge and Structures Architect should review the architectural features and visual impact of the walls during the Preliminary Design stage. The designer is also directed to the retaining walls chapter in the WSDOT *Design Manual* M 22-01 and Chapter 15 of the WSDOT *Geotechnical Design Manual* M 46-03, which provide valuable information on the design of retaining walls.

8.1.2 Common Types of Walls

The majority of walls used by WSDOT are one of the following six types:

1. Proprietary Structural Earth (SE) Walls - *Standard Specification* Section 6-13.
2. Geosynthetic Walls (Temporary and Permanent) - *Standard Plan* D-3 and *Standard Specification* Section 6-14.
3. Standard Reinforced Concrete Cantilever Retaining Walls- *Standard Plans* D-10.10 through D-10.45 and *Standard Specification* Section 6-11.
4. Soldier Pile Walls and Soldier Pile Tieback Walls - *Standard Specification* Sections 6-16 and 6-17.
5. Soil Nail Walls - *Standard Specification* Section 6-15.
6. Noise Barrier Walls - *Standard Plan* D-2.04 through D-2.68 and *Standard Specification* Section 6-12.

Other wall systems, such as secant pile or cylinder pile walls, may be used based on the recommendation of the Geotechnical Engineer. These walls shall be designed in accordance with the current AASHTO LRFD.

A. **Pre-approved Proprietary Walls –** A wall specified to be supplied from a single source (patented, trademark, or copyright) is a proprietary wall. Walls are generally pre-approved for heights up to 33 ft. The Materials Laboratory Geotechnical Division will make the determination as to which pre-approved proprietary wall system is appropriate on a case-by-case basis. The following is a description of the most common types of proprietary walls:

1. **Structural Earth Walls (SE) –** A structural earth wall is a flexible system consisting of concrete face panels or modular blocks that are held rigidly into place with reinforcing steel strips, steel mesh, welded wire, or geogrid extending into a select backfill mass. These walls will allow for some settlement and are best used for fill sections. The walls have two principal elements:
   - Backfill or wall mass: a granular soil with good internal friction (i.e. gravel borrow).
   - Facing: precast concrete panels, precast concrete blocks, or welded wire (with or without vegetation).

   Design heights in excess of 33 feet shall be approved by the Materials Laboratory Geotechnical Division. If approval is granted, the designer shall contact the individual structural earth wall manufacturers for design of these walls before the project is bid so details can be included in the Plans. See Appendix 8.1-A2 for details that need to be provided in the Plans for manufacturer designed walls.

   A list of current pre-approved proprietary wall systems is provided in Appendix 15-D of the WSDOT *Geotechnical Design Manual* M 46-03. For additional information see the retaining walls chapter in the WSDOT *Design Manual* M 22-01 and Chapter 15 of the WSDOT *Geotechnical Design Manual* M 46-03. For the SEW shop drawing review procedure see Chapter 15 of the WSDOT *Geotechnical Design Manual*.

2. **Other Proprietary Walls –** Other proprietary wall systems such as crib walls, bin walls, or precast cantilever walls, can offer cost reductions, reduce construction time, and provide special aesthetic features under certain project specific conditions.

   A list of current pre-approved proprietary wall systems and their height limitations is provided in Appendix 15-D of the WSDOT *Geotechnical Design Manual* M 46-03. The Region shall refer to the retaining walls chapter in the WSDOT *Design Manual* M 22-01 for guidelines on the selection of wall types. The Materials Laboratory Geotechnical Division and the Bridge and Structures Office Preliminary Plans Unit must approve the concept prior to development of the PS&E.

B. **Geosynthetic Wrapped Face Walls –** Geosynthetic walls use geosynthetics for the soil reinforcement and part of the wall facing. Use of geosynthetic walls as permanent structures requires the placement of a cast-in-place, precast or shotcrete facing. Details for construction are shown in Standard Plan D-3, D-3.10 and D-3.11.

C. **Standard Reinforced Concrete Cantilever Walls –** Reinforced concrete cantilever walls consist of a base slab footing from which a vertical stem wall extends. These walls are suitable for heights up to 35 feet. Details for construction and the maximum bearing pressure in the soil are given in the Standard Plans D-10.10 to D-10.45.

   A major disadvantage of these walls is the low tolerance to post-construction settlement, which may require use of deep foundations (shafts or piling) to provide adequate support.

D. **Soldier Pile Walls and Soldier Pile Tieback Walls –** Soldier Pile Walls utilize wide flange steel members, such as W or HP shapes. The piles are usually spaced 6 to 10 feet apart. The main horizontal members are timber or precast concrete lagging designed to transfer the soil loads to the piles. For additional information see WSDOT *Geotechnical Design Manual* M 46-03 Chapter 15. See Appendix 8.1-A3 for typical soldier pile wall details.

E. **Soil Nail Walls –** The basic concept of soil nailing is to reinforce and strengthen the existing ground by installing steel bars called "nails" into a slope or excavation as construction proceeds from the "top down". Soil nailing is a technique used to stabilize moving earth, such as a landslide, or as temporary shoring. Soil anchors are used along with the strength of the soil to provide stability. The Geotechnical Engineer designs the soil nail system whereas the Bridge and Structures Office designs the wall fascia. Presently, the FHWA Publication FHWA-IF-03-017 "Geotechnical Engineering Circular No. 7 Soil Nail Walls" is being used for structural design of the fascia. See Appendix 8.1-A4 for typical soil nail wall details.

F. **Noise Barrier Walls –** Noise barrier walls are primarily used in urban or residential areas to mitigate noise or to hide views of the roadway. Common types, as shown in the Standard Plans, include cast-in-place concrete panels (with or without traffic barrier), precast concrete panels (with or without traffic barrier), and masonry blocks. The State Bridge and Structures Architect should be consulted for wall type selection. Design criteria for noise barrier walls are based on AASHTO's *Guide Specifications for Structural Design of Sound Barriers*. Details of these walls are available in the Standard Plans D-2.04 to D-2.68. The Noise Barriers chapter of the WSDOT *Design Manual* M 22-01 tabulates the design wind speeds and various exposure conditions used to determine the appropriate wall type.

Placement of noise barrier walls on bridges and retaining walls should be avoided if possible. These structures are hazardous to the traffic below during seismic events or in case of vehicular impact. However, if necessary to place a noise barrier wall on a bridge or a retaining wall, see Section 3.12 for the design requirements of these walls. See Appendix 8.1-A5-1 for typical noise barrier wall on bridge details.

Noise barrier walls on bridges and retaining walls are considered special design and shall be designed on a case by case basis. WSDOT Standard Plans for Noise Barrier Walls may not be used for these applications.

The design requirements for precast wall panel connections to bridge and retaining wall barriers are different than for cast-in-place construction. Changing the noise barrier wall type from cast-in-place to precast requires approval of the Bridge Design Engineer.

8.1.3 Design

A. **General –** All designs shall follow procedures as outlined in AASHTO LRFD Chapter 11, the WSDOT *Geotechnical Design Manual* M 46-03, and this manual. See Appendix 8.1-A1 for a summary of design specification requirements for walls.

All construction shall follow procedures as outlined in the WSDOT *Standard Specifications for Road, Bridge, and Municipal Construction*, latest edition.

The Geotechnical Engineer will provide the earth pressure diagrams and other geotechnical design requirements for special walls to be designed by the Bridge and Structures Office. Pertinent soil data will also be provided for pre-approved proprietary structural earth walls (SEW), non-standard reinforced concrete retaining walls, and geosynthetic walls.

B. **Standard Reinforced Concrete Cantilever Retaining Walls –** The Standard Plan reinforced concrete retaining walls have been designed in accordance with the requirements of the AASHTO LRFD Bridge Design Specifications 4th Edition 2007 and interims through 2008.

1. Western Washington Walls (Types 1 through 4)

   a. The seismic design of these walls has been completed using and effective Peak Ground Acceleration of 0.51g.

   b. Active Earth pressure distribution was linearly distributed per Section 7.7.4. The corresponding Ka values used for design were 0.24 for wall Types 1 and 2, and 0.36 for Types 3 and 4.

   c. Seismic Earth pressure distribution was uniformly distributed per WSDOT *Geotechnical Design Manual* M 46-03, Nov. 2008, Section 15.4.2.9, and was supplemented by AASHTO LRFD Bridge Design Specifications (Fig. 11.10.7.1-1). The corresponding Kae values used for design were 0.43 for Types 1 and 2, and 0.94 for Types 3 and 4.

   d. Passive Earth pressure distribution was linearly distributed. The corresponding Kp value used for design was 1.5 for all walls. For Types 1 and 2, passive earth pressure was taken over the depth of the footing. For Types 3 and 4, passive earth pressure was taken over the depth of the footing and the height of the shear key.

   e. The retained fill was assumed to have an angle of internal friction of 36 degrees and a unit weight of 130 pounds per cubic foot. The friction angle for sliding stability was assumed to be 32 degrees.

   f. Load factors and load combinations used per AASHTO LRFD Bridge Design Specifications 3.4.1-1 and 2. Stability analysis performed per AASHTO LRFD Bridge Design Specifications Section 11.6.3 and C11.5.5-1&2.

   g. Wall Types 1 and 2 were designed for traffic barrier collision forces, as specified in AASHTO LRFD Bridge Design Specifications section A13.2 for TL-4. These walls have been designed with this force distributed over the distance between wall section expansion joints (48 feet).

2. Eastern Washington Walls (Types 5 through 8)

   a. The seismic design of these walls has been completed using and effective Peak Ground Acceleration of 0.2g.

   b. Active Earth pressure distribution was linearly distributed per Section 7.7.4 of this manual. The corresponding Ka values used for design were 0.36 for wall Types 5 and 6, and 0.24 for Types 7 and 8.

   c. Seismic Earth pressure distribution was uniformly distributed per WSDOT *Geotechnical Design Manual* M 46-03, Nov. 2008, Section 15.4.2.9, and was supplemented by AASHTO LRFD Bridge Design Specifications (Fig. 11.10.7.1-1). The corresponding Kae values used for design were 0.55 for Types 5 and 6, and 0.30 for Types 7 and 8.

   d. Passive Earth pressure distribution was linearly distributed, and was taken over the depth of the footing and the height of the shear key. The corresponding Kp value used for design was 1.5 for all walls.

   e. The retained fill was assumed to have an angle of internal friction of 36 degrees and a unit weight of 130 pounds per cubic foot. The friction angle for sliding stability was assumed to be 32 degrees.

   f. Load factors and load combinations used per AASHTO LRFD Bridge Design Specifications 3.4.1-1&2. Stability analysis performed per AASHTO LRFD Bridge Design Specifications section 11.6.3 and C11.5.5-1&2.

g. Wall Types 7 and 8 were designed for traffic barrier collision forces, as specified in AASHTO LRFD Bridge Design Specifications section A13.2 for TL-4. These walls have been designed with this force distributed over the distance between wall section expansion joints (48 feet).

C. **Non-Standard Reinforced Concrete Retaining Walls –** For retaining walls where a traffic barrier is to be attached to the top of the wall, the AASHTO LRFD Extreme Event loading for vehicular collision must be analyzed. These loads are tabulated in LRFD Table A13.2-1. Although the current yield line analysis assumptions for this loading are not applicable to retaining walls, the transverse collision load (F_t) may be distributed over the longitudinal length (L_t) at the top of barrier. At this point, the load is distributed at a 45 degree angle into the wall. Future updates to the LRFD code will address this issue.

For sliding, the passive resistance in the front of the footing may be considered if the earth is more than 2 feet deep on the top of the footing and does not slope downward away from the wall. The design soil pressure at the toe of the footing shall not exceed the allowable soil bearing capacity supplied by the Geotechnical Engineer. For retaining walls supported by deep foundations (shafts or piles), refer to Sections 7.7.5, 7.8 and 7.9 of this manual.

D. **Soldier Pile and Soldier Pile Tieback Walls**

1. **Permanent Ground Anchors (Tiebacks) –** See AASHTO LRFD Section 11.9 "Anchored Walls". The Geotechnical Engineer will determine whether anchors can feasibly be used at a particular site based on the ability to install the anchors and develop anchor capacity. The presence of utilities or other underground facilities, and the ability to attain underground easement rights may also determine whether anchors can be installed.

   The anchor may consist of bars, wires, or strands. The choice of appropriate type is usually left to the Contractor but may be specified by the designer if special site conditions exist that preclude the use of certain anchor types. In general, strands and wires have advantages with respect to tensile strength, limited work areas, ease of transportation, and storage. However, bars are more easily protected against corrosion, and are easier to develop stress and transfer load.

   The geotechnical report will provide a reliable estimate of the feasible factored design load of the anchor, recommended anchor installation angles (typically 10° to 45°), no-load zone dimensions, and any other special requirements for wall stability for each project.

   Both the "tributary area method" and the "hinge method" as outlined in AASHTO LRFD Section C11.9.5.1 are considered acceptable design procedures to determine the horizontal anchor design force. The capacity of each anchor shall be verified by testing. Testing shall be done during the anchor installation (See *Standard Specification Section* 6-17.3(8) and WSDOT *Geotechnical Design Manual* M 46-03).

   a. The horizontal anchor spacing typically follows the pile spacing of 6 to 10 feet. The vertical anchor spacing is typically 8 to 12 feet. A minimum spacing of 4 feet in both directions is not recommended because it can cause a loss of effectiveness due to disturbance of the anchors during installation.

   b. For permanent ground anchors, the anchor DESIGN LOAD, T, shall be according to AASHTO LRFD. For temporary ground anchors, the anchor DESIGN LOAD, T, may ignore extreme event load cases.

   c. The lock-off load is 60 percent of the controlling factored design load for temporary and permanent walls (see WSDOT *Geotechnical Design Manual* M 46-03 Chapter 15).

2. **Permanent Ground Anchor Corrosion Protection –** The Geotechnical Engineer will specify the appropriate protection system; the two primary types are:

   a. Simple Protection: The use of simple protection relies on Portland cement grout to protect the tendon, bar, or strand in the bond zone. The unbonded lengths are sheaths filled with anti-corrosion grease, heat shrink sleeves, and secondary grouting after stressing. Except for secondary grouting, the protection is usually in place prior to insertion of the anchor in the hole.

   b. Double Protection: a corrugated PVC, high-density polyethylene, or steel tube accomplishes complete encapsulation of the anchor tendon. The same provisions of protecting the unbonded length for simple protection are applied to those for double protection.

3. **Design of Soldier Pile –** The soldier piles shall be designed for shear, bending, and axial stresses according to the latest AASHTO LRFD and WSDOT *Geotechnical Design Manual* M 46-03 design criteria. The bending moment shall be based on the elastic section modulus "S" for the entire length of the pile for all Load combinations

   a. Lateral Loads

      (1) Lateral loads are assumed to act over one pile spacing above the base of excavation in front of the wall. These lateral loads result from horizontal earth pressure, live load surcharge, seismic earth pressure, or any other applicable load.

      (2) Lateral loads are assumed to act over the shaft diameter below the base of excavation in front of the wall. These lateral loads result from horizontal earth pressure, seismic earth pressure or any other applicable load.

      (3) Passive earth pressure usually acts over three times the shaft diameter or pile spacing, whichever is smaller.

   b. Depth of Embedment

      The depth of embedment of soldier piles shall be the maximum embedment as determined from the following;

      (1) 10 feet

      (2) As recommended by the Geotechnical Engineer of Record

      (3) As required for skin friction resistance and end bearing resistance.

      (4) As required to satisfy horizontal force equilibrium and moment equilibrium about the bottom of the soldier pile for cantilever soldier piles without permanent ground anchors.

      (5) As required to satisfy moment equilibrium of lateral force about the bottom of the soldier pile for soldier piles with permanent ground anchors.

4. **Design of Lagging –** Lagging for soldier pile walls, with and without permanent ground anchors, may be comprised of timber, precast concrete, or steel. The expected service life of timber lagging is 20 years which is less than the 75 year service life of structures designed in accordance with AASHTO LRFD.

   The Geotechnical Engineer will specify when lagging shall be designed for an additional 250 psf surcharge due to temporary construction load or traffic surcharge. The lateral pressure transferred from a moment slab shall be considered in the design of soldier pile walls and laggings.

Temporary Timber Lagging – Temporary lagging is based on a maximum 36 month service life before a permanent fascia is applied over the lagging. The wall Design Engineer shall review the Geotechnical Recommendations or consult with the Geotechnical Engineer regarding whether the lagging may be considered as temporary as defined in Section 6-16.3(6) of the *Standard Specifications*. Temporary timber lagging shall be designed by the contractor in accordance with Section 6-16.3(6)B of the *Standard Specifications.*

Permanent Lagging – Permanent lagging shall be designed for 100% of the lateral load that could occur during the life of the wall in accordance with AASHTO LRFD Sections 11.8.5.2 and 11.8.6 for simple spans without soil arching. A reduction factor to account for soil arching effects may be used if permitted by the Geotechnical Engineer.

Timber lagging shall be designed in accordance with AASHTO LRFD Section 8.6. The size effect factor (CF_b) should be considered 1.0, unless a specific size is shown in the wall plans. The wet service factor (CM_b) should be considered 0.85 for a saturated condition at some point during the life of the lagging. The load applied to lagging should be applied at the critical depth. The design should include the option for the contractor to step the size of lagging over the height of tall walls, defined as walls over 15 feet in exposed face height.

Timber lagging designed as a permanent structural element shall consist of treated Douglas Fir-Larch, grade No. 2 or better. Hem-fir wood species, due to the inadequate durability in wet condition, shall not be used for permanent timber lagging. Permanent lagging is intended to last the design life cycle (75 years) of the wall. Timber lagging does not have this life cycle capacity but can be used when both of the following are applicable:

(1) The wall will be replaced within a 20 year period or a permanent fascia will be added to contain the lateral loads within that time period.

And,

(2) The lagging is visible for inspections during this life cycle.

5. **Design of Fascia Panels –** Cast-in-place concrete fascia panels shall be designed as a permanent load carrying member in accordance with AASHTO LRFD Section 11.8.5.2. For walls without permanent ground anchors the minimum structural thickness of the fascia panels shall be 9 inches. For walls with permanent ground anchors the minimum structural thickness of the fascia panels shall be 14 inches. Architectural treatment of concrete fascia panels shall be indicated in the plans.

   Concrete strength shall not be less than 4,000 psi at 28 days. The wall is to extend 2 feet minimum below the finish ground line adjacent to the wall.

   When concrete fascia panels are placed on soldier piles, a generalized detail of lagging with strongback (see Appendix 8.1-A3-5) shall be shown in the plans. This information will assist the contractor in designing formwork that does not overstress the piles while concrete is being placed.

   Precast concrete fascia panels shall be designed to carry 100% of the load that could occur during the life of the wall. When timber lagging (including pressure treated lumber) is designed to be placed behind a precast element, conventional design practice is to assume that lagging will eventually fail and the load will be transferred to the precast panel. If another type of permanent lagging is used behind the precast fascia panel, then the design of the fascia panel will be controlled by internal and external forces other than lateral pressures from the soil (weight, temperature, Seismic, Wind, etc.). The connections for precast panels to soldier piles shall be designed for all applicable loads and the designer should consider rigidity, longevity (to resist cyclic loading, corrosion, etc.), and load transfer.

   See Section 5.1.1 of this manual for use of shotcrete in lieu of cast-in-place conventional concrete for soldier pile fascia panels.

8.1.4 Miscellaneous Items

A. **Drainage –** Drainage features shall be detailed in the Plans.

Permanent drainage systems shall be provided to prevent hydrostatic pressures developing behind the wall. A cut that slopes toward the proposed wall will invariably encounter natural subsurface drainage. Vertical chimney drains or prefabricated drainage mats can be used for normal situations to collect and transport drainage to a weep hole or pipe located at the base of the wall. Installing horizontal drains to intercept the flow at a distance well behind the wall may control concentrated areas of subsurface drainage (see WSDOT *Geotechnical Design Manual* M 46-03 Chapter 15).

All reinforced concrete retaining walls shall have 3-inch diameter weepholes located 6 inches above final ground line and spaced about 12 feet apart. In case the vertical distance between the top of the footing and final ground line is greater than 10 feet, additional weepholes shall be provided 6 inches above the top of the footing. No weepholes are necessary in cantilever wingwalls.

Weepholes can get clogged up or freeze up, and the water pressure behind the wall may start to increase. In order to keep the water pressure from building, it is important to have well draining gravel backfill and underdrains. Appropriate details must be shown in the Plans.

No underdrain pipe or gravel backfill for drains is necessary behind cantilever wingwalls. A 3 foot minimum thickness of gravel backfill shall be shown in the Plans behind the cantilever wingwalls. Backfill material shall be included with the civil quantities (not the bridge quantities). If it is necessary to excavate existing material for the backfill, then this excavation shall be a part of the bridge quantities for "Structure Excavation Class A Incl. Haul".

B. **Scour –** The foundation for all walls constructed along rivers and streams shall be evaluated during design by the Hydraulics Engineer for scour in accordance with AASHTO LRFD Sec. 2.6.4.4.2. The wall foundation shall be located at least 2 feet below the scour depth in accordance with the WSDOT *Geotechnical Design Manual* M 46-03 Section15.4.5.

C. **Joints –** For cantilevered and gravity walls constructed without a traffic barrier attached to the top, joint spacing should be a maximum of 24 feet on centers. For cantilevered and gravity walls constructed with a traffic barrier attached to the top, joint spacing should be a maximum of 48 feet on centers or that determined for adequate distribution of the traffic collision loading. For counterfort walls, joint spacing should be a maximum of 32 feet on centers. For soldier pile and soldier pile tieback walls with concrete fascia panels, joint spacing should be 24 to 32 feet on centers. For precast units, the length of the unit depends on the height and weight of each unit. Odd panels for all types of walls shall normally be made up at the ends of the walls. Every joint in the wall shall provide for expansion. For cast-in-place construction, a minimum of ½ inch premolded filler should be specified in the joints. A compressible back-up strip of closed-cell foam polyethylene or butyl rubber with a sealant on the front face is used for precast concrete walls.

No joints other than construction joints shall be used in footings except at bridge abutments and where substructure changes such as spread footing to pile footing occur. In these cases, the footing shall be interrupted by a ½ inch premolded expansion joint through both the footing and the wall. The maximum spacing of construction joints in the footing shall be 120 feet. The footing construction joints should have a 6-inch minimum offset from the expansion joints in the wall.

D. **Architectural Treatment –** The type of surface treatment for retaining walls is decided on a project specific basis. Consult the State Bridge and Structures Architect during preliminary plan preparation for approval of all retaining wall finishes, materials and configuration. The wall should blend in with its surroundings and complement other structures in the vicinity.

E. **Shaft Backfill for Soldier Pile Walls –** Specify controlled density fill (CDF, 145 pcf) for soldier pile shafts (full height) when shafts are anticipated to be excavated in the dry

When under water concrete placement is anticipated for the soldier pile shafts, specify pumpable lean concrete.

F. Detailing of Standard Reinforced Concrete Retaining Walls

1. In general, the "H" dimension shown in the retaining wall Plans should be in foot increments. Use the actual design "H" reduced to the next lower even foot for dimensions up to 3 inches higher than the even foot.

   Examples: Actual height = 15′-3"↑, show "H" = 15' on design plans
   Actual height > 15′-3"↑, show "H" = 16' on design plans

   For walls that are not of a uniform height, "H" should be shown for each segment of the wall between expansion joints or at some other convenient location. On walls with a steep slope or vertical curve, it may be desirable to show 2 or 3 different "H" dimensions within a particular segment. The horizontal distance should be shown between changes in the "H" dimensions.

   The value for "H" shall be shown in a block in the center of the panel or segment. See Example, Figure 9.4.4-1.

2. Follow the example format shown in Figure 8.1.4-1.
3. Calculate approximate quantities using the Standard Plans.
4. Wall dimensions shall be determined by the designer using the Standard Plans.
5. Do not show any details given in the Standard Plans.
6. Specify in the Plans all deviations from the Standard Plans.
7. Do not detail reinforcing steel, unless it deviates from the Standard Plans.
8. For pile footings, use the example format with revised footing sizes, detail any additional steel, and show pile locations. Similar plan details are required for footings supported by shafts.

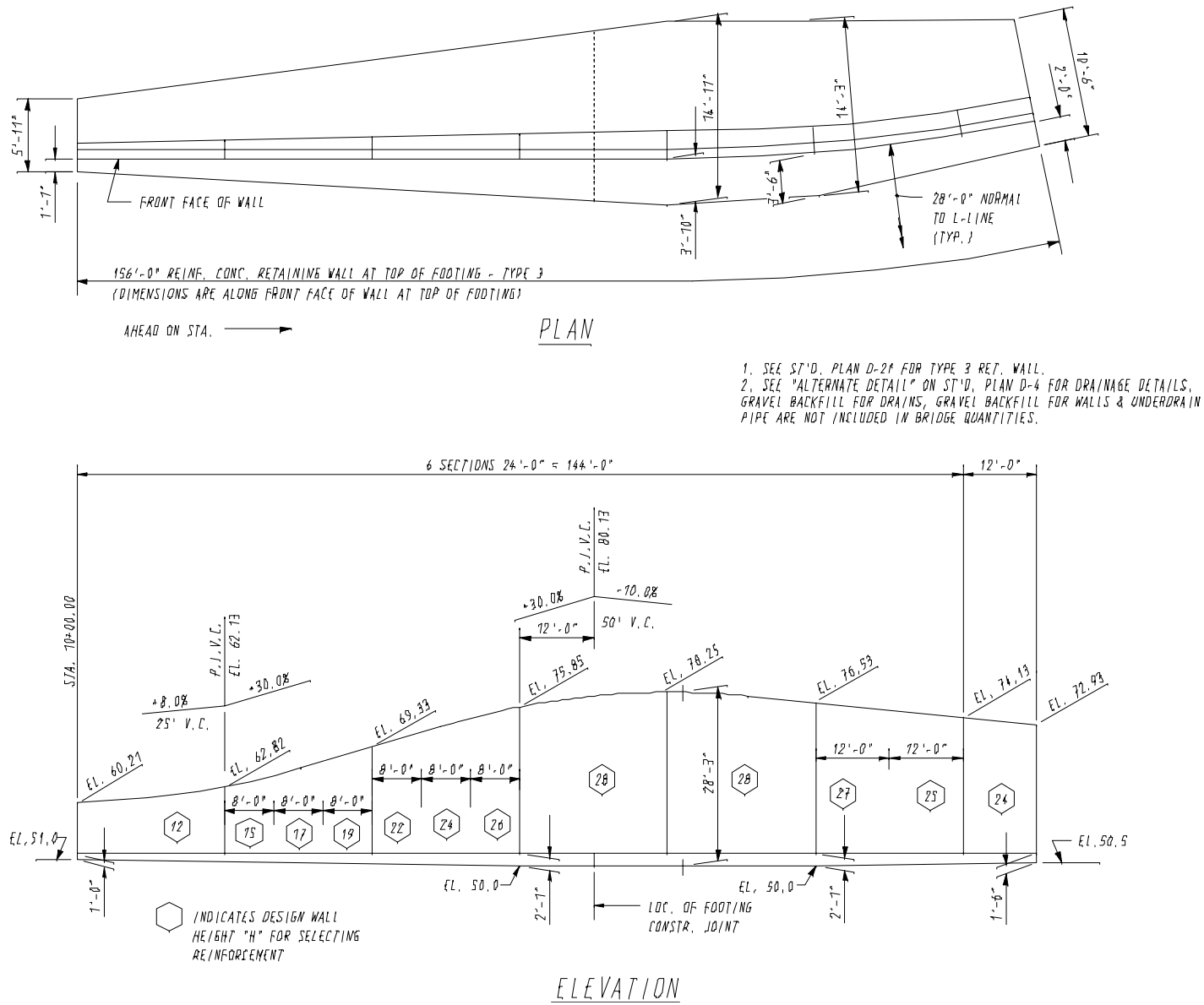
5'-11"
1'-1"
FRONT FACE OF WALL
14'-11"
14'-3"
3'-6"
3'-10"
10'-6"
2'-0"
28'-0" NORMAL
TO L-LINE
(TYP.)
156'-0" REINF. CONC. RETAINING WALL AT TOP OF FOOTING - TYPE 3
(DIMENSIONS ARE ALONG FRONT FACE OF WALL AT TOP OF FOOTING)
AHEAD ON STA.
PLAN
1. SEE ST'D. PLAN D-21 FOR TYPE 3 RET. WALL.
2. SEE "ALTERNATE DETAIL" ON ST'D. PLAN D-4 FOR DRAINAGE DETAILS.
GRAVEL BACKFILL FOR DRAINS, GRAVEL BACKFILL FOR WALLS & UNDERDRAIN
PIPE ARE NOT INCLUDED IN BRIDGE QUANTITIES.
6 SECTIONS 24'-0" = 144'-0"
12'-0"
STA. 10+00.00
P.J.V.C.
EL. 62.13
+8.0%
25' V.C.
+30.0%
EL. 60.21
EL. 62.82
EL. 69.33
P.J.V.C.
EL. 80.13
+30.0%
-10.0%
12'-0"
50' V.C.
EL. 75.85
EL. 78.25
EL. 76.53
EL. 74.13
EL. 72.93
8'-0"
8'-0"
8'-0"
8'-0"
8'-0"
8'-0"
28'-3"
12'-0"
12'-0"
12
15
17
19
22
24
26
28
28
27
25
24
EL. 51.0
EL. 50.5
1'-0"
EL. 50.0
2'-1"
LOC. OF FOOTING
CONSTR. JOINT
EL. 50.0
2'-1"
1'-6"
INDICATES DESIGN WALL
HEIGHT "H" FOR SELECTING
REINFORCEMENT
ELEVATION

Figure 8.1.4-1

8.2 Miscellaneous Underground Structures

8.2.1 General

Miscellaneous underground structures consist of box culverts, precast reinforced concrete three-sided structures, detention vaults, metal pipe arches, and tunnels.

Generally, the seismic design criteria does not control the design of underground structures unless the peak ground acceleration exceeds 0.3g, where g is the acceleration due to gravity. This is because the structures are supported on all sides by soil and rock, and move as a unit with the adjacent soil. See reference by Miller and Constantino (1994). As with any structure, a geotechnical soils report with loading or pressure diagrams, settlement criteria, and ground water levels will be needed from the Materials Laboratory Geotechnical Services Branch in order to complete the design.

8.2.2 Design

A. **Box Culverts –** Box culverts are four-sided rigid frame structures and are either made from cast-in-place (CIP) reinforced concrete or precast concrete. In the past, standardized box culvert plan details were shown in the WSDOT *Standard Plans*, under the responsibility of the Hydraulics Branch. These former Standard Plans have been deleted and are no longer available. Now box culvert design is standardized under applicable AASHTO material specifications, and design plans are not required in the PS&E. Box culverts shall be in accordance with ASTM C1433.

B. **Precast Reinforced Concrete Three-Sided Structures –** Precast reinforced concrete three-sided structures are patented or trademarked rigid frame structures made from precast concrete. Some fabricators of these systems are: Utility Vault Company, Central Pre-Mix Prestress Company, and Bridge Tek, LLC. These systems require a CIP concrete or precast footing that must provide sufficient resistance to the horizontal reaction or thrust at the base of the vertical legs.

   The precast concrete fabricators are responsible for the structural design and the preparation of shop plans. Precast reinforced concrete three sided structures, constructed in accordance with the current WSDOT General Special Provisions (GSP's) for these structures, shall be designed under AASHTO LRFD Bridge Specifications. The fabricators of systems which have received WSDOT pre-approval are specified in the GSP's. The bridge designer reviewing the project will be responsible for reviewing the fabricator's design calculations and details with consultation from the Construction Support Unit. Under the current GSP, precast reinforced concrete three sided structures are limited to spans of 26 feet or less. However, in special cases it may be necessary to allow longer spans, with the specific approval of the Bridge and Structures Office. Several manufacturers advertise spans over 40 feet.

C. **Detention Vaults** – Detention vaults are used for stormwater storage and are to be watertight. These structures can be open at the top like a swimming pool, or completely enclosed and buried below ground. Detention vaults shall be designed by the AASHTO LRFD Bridge Design Specification and the following: Seismic design effects shall satisfy the requirements of ACI 350.3-06 "Seismic Design of Liquid-Containing Concrete Structures." Requirements for Joints and jointing shall satisfy the requirements of ACI 350-06. Two references for tank design are the PCA publications *Rectangular Concrete Tanks*, Revised 5th Edition (1998) and *Design of Liquid-Containing Structures for Earthquake Forces* (2002).

   The geotechnical field investigations and recommendations shall comply with the requirements given in 8.16 of the WSDOT *Geotechnical Design Manual*. In addition to earth pressures, water tables, seismic design, and uplift, special consideration should be given to ensure differential settlement either does not occur or is included in the calculations for forces, crack control and water stops.

   Buoyant forces from high ground water conditions should be investigated for permanent as well as construction load cases so the vault does not float. Controlling loading conditions may include: backfilling an empty vault, filling the vault with stormwater before it is backfilled, or seasonal

maintenance that requires draining the vault when there is a high water table. In all Limit States, the buoyancy force (*WA*) load factor shall be taken as $\gamma_{WA} = 1.25$ in AASHTO LRFD Table 3.4.1-1. In the Strength Limit State, the load factors that resist buoyancy (γ_{DC}, γ_{DW}, γ_{ES}, Etc.) shall be their minimum values, per AASHTO LRFD Table 3.4.1-2 and the entire vault shall be considered empty. During the vault construction, the water table shall be taken as the seal vent elevation or the top of the vault, if open at the top. In this case the load factors that resist buoyancy shall be their minimum values, except where specified as a construction load, per AASHTO LRFD Section 3.4.2. In certain situations tie-downs may be required to resist buoyancy forces. The resisting force (R_n) and resistance factors (ø) for tie-downs shall be provided by the Geotechnical Engineers. The buoyancy check shall be as follows:

For Buoyancy without tie-downs:

$$(R_{RES} / R_{UPLIFT}) \geq 1.0$$

For Buoyancy with tie-downs:

$$(R_{\mathrm{RES}} / [R_{UPLIFT} + øR_n]) \geq 1.0$$

Where:

$$R_{RES} = \left| \gamma_{DC} DC + \gamma_{DW} DW + \gamma_{ES} ES + \gamma_{\mathrm{i}} Q_{\mathrm{i}} \right|$$

$$R_{UPLIFT} = \left| \gamma_{\mathrm{WA}} WA \right|$$

ACI 350-06 has stricter criteria for cover and spacing of joints than the AASHTO LRFD Specifications. Cover is not to be less than 2 inches (ACI 7.7.1), no metal or other material is to be within 1½ inches from the formed surface, and the maximum bar spacing shall not exceed 12 inches (ACI 7.6.5). Crack control criteria is per AASHTO LRFD 5.7.3.4 with $\gamma_e = 0.5$ (in order to maintain a crack width of 0.0085 inches, per the commentary of 5.7.3.4).

Joints in the vault's top slab, bottom slab and walls shall allow dissipation of temperature and shrinkage stresses, thereby reducing cracking. The amount of temperature and shrinkage reinforcement is a function of reinforcing steel grade "and length between joints (ACI Table 7.12.2-1). All joints shall have a shear key and a continuous and integral PVC waterstop with a 4-inch minimum width. The purpose of the waterstop is to prevent water infiltration and exfiltration. Joints having welded shear connectors with grouted keyways shall use details from WSDOT Precast Prestressed Slab Details or approved equivalent, with weld ties spaced at 4′-0″ on center. Modifications to the above joints shall be justified with calculations. Calculations shall be provided for all grouted shear connections. The width of precast panels shall be increased to minimize the number of joints between precast units.

For cast-in-place walls in contact with liquid that are over 10' in height, the minimum wall thickness is 12″. This minimum thickness is generally good practice for all external walls, regardless of height, to allow for 2 inches of cover as well as space for concrete placement and vibration.

After the forms are placed, the void left from the form ties shall be coned shaped, at least 1 inch in diameter and 1½ inches deep, to allow proper patching.

Detention vaults that need to be located within the prism supporting the roadway are required to meet the following maintenance criteria. A by-pass piping system is required. Each cell in the vault shall hold no more than 6000 gallons of water to facilitate maintenance and cleanout operations. Baffles shall be water tight. Access hatches shall be spaced no more than 50 feet apart. There shall be an access near both the inlet and the outfall. These two accesses shall allow for visual inspection of the inlet and outfall elements, in such a manner that a person standing on the ladder, out of any standing water, will be in reach of any grab handles, grates or screens. All other access hatches shall be over sump areas. All access hatches shall be a minimum 30 inch in diameter, have ladders that extend to the vault floor, and shall be designed to resist HS-20 wheel loads with applicable impact factors as described below.

Detention vaults that need to be located in the roadway shall be oriented so that the access hatches are located outside the traveled lanes. Lane closures are usually required next to each access hatch for maintenance and inspection, even when the hatches are in 12′-0″ wide shoulders.

A 16 kip wheel load having the dynamic load allowance for deck joints, in AASHTO LRFD Table 3.6.2.1-1, shall be applied at the top of access hatches and risers. The load path of this impact force shall be shown in the calculations.

Minimum vault dimensions shall be 4′-0″ wide and 7′-0″ tall; inside dimensions.

Original signed plans of all closed top detention vaults with access shall be forwarded to the Bridge Plans Engineer in the Bridge Project Unit (see Section 12.4.10.B of this manual). This ensures that the Bridge Preservation Office will have the necessary inventory information for inspection requirements. A set of plans must be submitted to both the WSDOT Hydraulics Office and the Regional WSDOT Maintenance Office for plans approval.

D. **Metal Pipe Arches –** Soil ph should be investigated prior to selecting this type of structure. Metal Pipe arches are not generally recommended under high volume highways or under large fills.

Pipe arch systems are similar to precast reinforced concrete three sided structures in that these are generally proprietary systems provided by several manufacturers, and that their design includes interaction with the surrounding soil. Pipe arch systems shall be designed in accordance with the AASHTO Standard Specifications for Highway Bridges, and applicable ACI design and ASTM material specifications.

E. **Tunnels –** Tunnels are unique structures in that the surrounding ground material is the structural material that carries most of the ground load. Therefore, geology has even more importance in tunnel construction than with above ground bridge structures. In short, geotechnical site investigation is the most important process in planning, design and construction of a tunnel. These structures are designed in accordance with the AASHTO LRFD Bridge Design Specifications.

Tunnels are not a conventional structure, and estimation of costs is more variable as size and length increase. Ventilation, safety access, fire suppression facilities, warning signs, lighting, emergency egress, drainage, operation and maintenance are extremely critical issues associated with the design of tunnels and will require the expertise of geologists, tunnel experts and mechanical engineers.

For motor vehicle fire protection, a standard has been produced by the National Fire Protection Association. This document, “NFPA 502 – Standard for Road Tunnels, Bridges, and Other Limited Access Highways”, uses tunnel length to dictate minimum fire protection requirements:

300 feet or less: no fire protection requirements
300 to 800 feet: minor fire protection requirements
800 feet or more: major fire protection requirements

Some recent WSDOT tunnel projects are:

I-90 Mt. Baker Ridge Tunnel Bore Contract: 3105 Bridge No: 90/24N

This 1500 foot long tunnel is part of the major improvement of Interstate 90.Work was started in 1983 and completed in 1988. The net interior diameter of the bored portion, which is sized for vehicular traffic on two levels with a bike/pedestrian corridor on the third level, is 63.5 feet. The project is the world’s largest diameter tunnel in soft ground, which is predominantly stiff clay. Construction by a stacked-drift method resulted in minimal distortion of the liner and insignificant disturbance at the ground surface above.

Jct I-5 SR 526 E-N Tunnel Ramp Contract: 4372 Bridge No: 526/22E-N

This 465 foot long tunnel, an example of the cut and cover method, was constructed in 1995. The interior dimensions were sized for a 25 foot wide one lane ramp roadway with a vertical height of 18 feet. The tunnel was constructed in 3 stages. 3 and 4 foot diameter shafts for the

walls were placed first, a 2 foot thick cast-in-place top slab was placed second and then the tunnel was excavated, lined and finished.

I-5 Sleater-Kinney Bike/Ped. Tunnel Contract: 6031 Bridge No: 5/335P

This 122 foot long bike and pedestrian tunnel was constructed in 2002 to link an existing path along I-5 under busy Sleater-Kinney Road. The project consisted of precast prestressed slab units and soldier pile walls. Construction was staged to minimize traffic disruptions.

8.2.3 References

1. AASHTO LRFD Bridge Design Specifications, 5th Edition, American Association of State Highway and Transportation Officials, Washington, D.C.
2. AASHTO *Standard Specifications for Highway Bridges*, 17th Ed., 2002
3. WSDOT Standard Specifications for Highway Bridges and Municipal Construction, Olympia, Washington 98501.
4. ACI 350/350R-06 Code Requirements for Environmental Engineering Concrete Structures, ACI, 2006.
5. Munshi, Javeed A. *Rectangular Concrete Tanks*, Rev. 5th Ed., PCA, 1998.
6. Miller, C. A. and Constantino, C. J. "Seismic Induced Earth Pressure in Buried Vaults", PVP-Vol.271, *Natural Hazard Phenomena and Mitigation*, ASME, 1994, pp. 3-11.
7. Munshi, J. A. *Design of Liquid-Containing Concrete Structures for Earthquake Forces*, PCA, 2002.
8. NFPA 502, *Standard for Road Tunnels, Bridges, and Other Limited Access Highways*.

Wall Types		Design Specifications
Pre-Approved Proprietary Structural Earth Walls	General	Design shall be based on current editions, including current interims, of the following documents; AASHTO Standard Specifications for Highway Bridges - 17th Edition for projects initiated prior to October 1, 2010. AASHTO LRFD Bridge Design Specifications for projects initiated after October 1, 2010, WSDOT Geotechnical Design Manual (GDM) and WSDOT Bridge Design Manual (BDM).
	Seismic	AASHTO LRFD Bridge Design Specifications 1000 year map design acceleration.
	Traffic Barrier	Moment slab barrier shall be designed in accordance with the WSDOT BDM and the AASHTO LRFD Bridge Design Specifications section A13.3 for Concrete Railings considering a minimum TL-4 impact load, unless otherwise specified in the Contract Plans or Contract Special Provisions.
Non-Preapproved Proprietary Structural Earth Walls	General	Design shall be based on current editions, including current interims, of the following documents; AASHTO LRFD Bridge Design Specifications, WSDOT GDM and WSDOT BDM.
	Seismic	AASHTO LRFD Bridge Design Specifications 1000 year map design acceleration.
	Traffic Barrier	Moment slab barrier shall be designed in accordance with the WSDOT BDM and the AASHTO LRFD Bridge Design Specifications section A13.3 for Concrete Railings considering a minimum TL-4 impact load, unless otherwise specified in the Contract Plans or Contract Special Provisions.
Standard Plan and Non-Standard Geosynthetic Walls	General	Design shall be based on current editions, including current interims, of the following documents; AASHTO LRFD Bridge Design Specifications, WSDOT GDM and WSDOT BDM.
	Seismic	AASHTO LRFD Bridge Design Specifications 1000 year Seismic Acceleration map.
	Traffic Barrier	For Standard Plan Geosynthetic walls use Standard Plan D-3b (D-3.15) or D-3c (D-3.16) barriers. Special design barriers to be constructed on Standard Plan or Non-Standard Geosynthetic Walls shall be designed in accordance with the WSDOT Bridge Design Manual and the AASHTO LRFD Bridge Design Specifications section A13.3 for Concrete Railings considering a minimum TL-4 impact load.
Standard Plan and Non-Standard Reinforced Concrete Cantilever Walls	General	Current Standard Plan walls are designed in accordance with AASHTO LRFD Bridge Design Specifications 4th Edition 2007 and interims through 2008 and the WSDOT Geotechnical Design Manual Nov. 2008. Non-standard reinforced concrete cantilever walls shall be designed in accordance with the current editions, including current interims, of the following documents; AASHTO LRFD Bridge Design Specifications, WSDOT Geotechnical Design Manual and WSDOT Bridge Design Manual.
	Seismic	AASHTO LRFD Bridge Design specifications 1000 year map design acceleration.
	Traffic Barrier	WSDOT Bridge Design Manual and the AASHTO LRFD Bridge Design Specifications section A13.3 for Concrete Railings considering a minimum TL-4 impact load. F_t is distributed over L_t at the top of barrier. Load from top of barrier is distributed at a 45 degree angle into the wall. Current Standard Plan walls are designed for TL-4 impact loading distributed over 48 ft at the base of wall

Wall Types	Design Specifications	
Soldier Pile Walls With & Without Tie-Backs	General	Design shall be based on current editions, including current interims, of the following documents; AASHTO LRFD Bridge Design Specifications, WSDOT GDM and WSDOT BDM.
	Seismic	AASHTO LRFD Bridge Design Specifications 1000 year map design acceleration.
	Traffic Barrier	AASHTO LRFD Bridge Design Specifications section A13.3 for Concrete Railings considering a minimum TL-4 impact load. F_t is distributed over L_t at the top of barrier. Load from top of barrier is distributed downward into the wall spreading at a 45 degree angle.
Standard Plan Noise Barrier Walls	General	AASHTO Guide Specifications for Structural Design of Sound Barriers – 1989 & Interims.
	Seismic	AASHTO Guide Specifications for Structural Design of Sound Barriers – 1989 & Interims.
	Traffic Barrier	AASHTO Guide Specifications for Structural Design of Sound Barriers – 1989 & Interims.
Non-Standard Noise Barrier Walls	General	Design shall be based on current editions, including current interims, of the following documents; AASHTO LRFD Bridge Design Specifications, WSDOT GDM and WSDOT BDM.
	Seismic	AASHTO LRFD Bridge Design specifications 1000 year map design acceleration.
	Traffic Barrier	WSDOT Bridge Design Manual and the AASHTO LRFD Bridge Design Specifications section A13.3 for Concrete Railings considering a minimum TL-4 impact load.
Soil Nail Walls	General	All soil nail walls and their components shall be designed using the publication “Geotechnical Engineering Circular No. 7” FHWA-IF-03-017. The Geotechnical Engineer completes the internal design of the soil nail wall and provides recommendations for nail layout. The structural designer will layout the nail pattern. The geotechnical engineer will review the nail layout to insure compliance with the Geotechnical recommendations. The structural designer shall design the temporary shotcrete facing as well as the permanent structural facing, including the bearing plates, and shear studs. The upper cantilever of the facing that is located above the top row of nails shall be designed in accordance with current editions, including current interims, of the following documents; AASHTO LRFD Bridge Design Specifications, WSDOT GDM and WSDOT BDM.
	Seismic	AASHTO LRFD Bridge Design Specifications 1000 year map design acceleration.
	Traffic Barrier	Moment slab barrier shall be designed in accordance with the WSDOT Bridge Design Manual and the AASHTO LRFD Bridge Design Specifications section A13.3 for Concrete Railings considering a minimum TL-4 impact load
Non Standard Non Proprietary Walls Gravity Blocks, Gabion Walls	General	Design shall be based on current editions, including current interims, of the following documents; AASHTO LRFD Bridge Design Specifications, WSDOT GDM and WSDOT BDM.
	Seismic	AASHTO LRFD Bridge Design specifications 1000 year map design acceleration.
	Traffic Barrier	WSDOT Bridge Design Manual and the AASHTO LRFD Bridge Design Specifications section A13.3 for Concrete Railings considering a minimum TL-4 impact load.

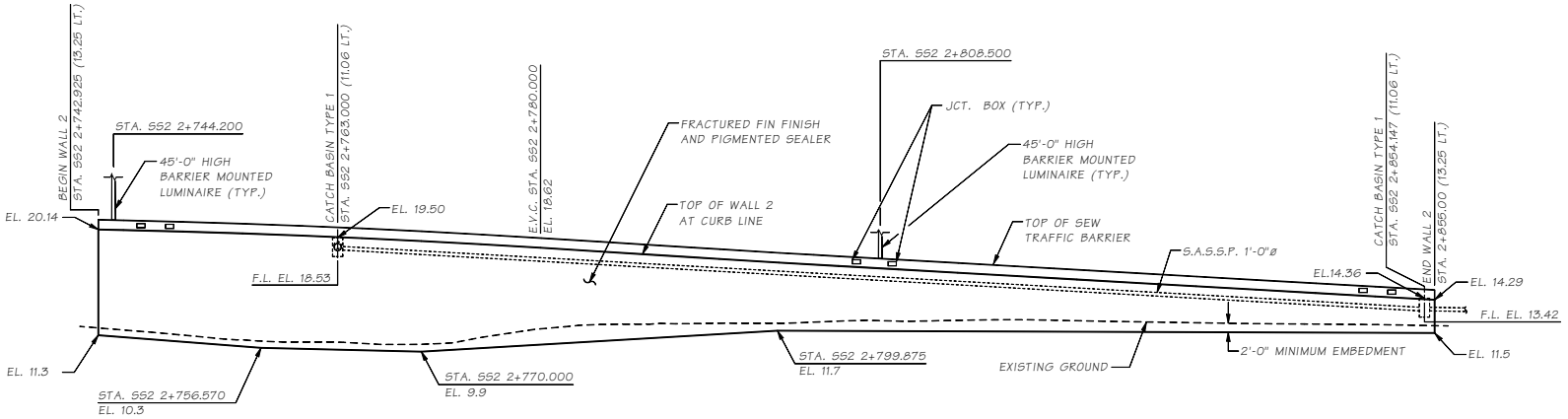

DEVELOPED ELEVATION

Bridge Design Engr.	M:\STANDARDS\Walls\MSE ELEV.MAN				REGION NO.	STATE	FED. AID PROJ. NO.	SHEET NO.	TOTAL SHEETS
Supervisor					10	WASH.			
Designed By					JOB NUMBER				
Checked By									
Detailed By									
Bridge Projects Engr.									
Prelim. Plan By									
Architect/Specialist	DATE	REVISION	BY	APP'D					

BRIDGE AND STRUCTURES OFFICE

Washington State Department of Transportation

SEW WALL ELEVATION

BRIDGE SHEET NO. SHEET OF SHEETS

SR JOB NO. SHEET

Fri Sep 03 11:29:50 2010

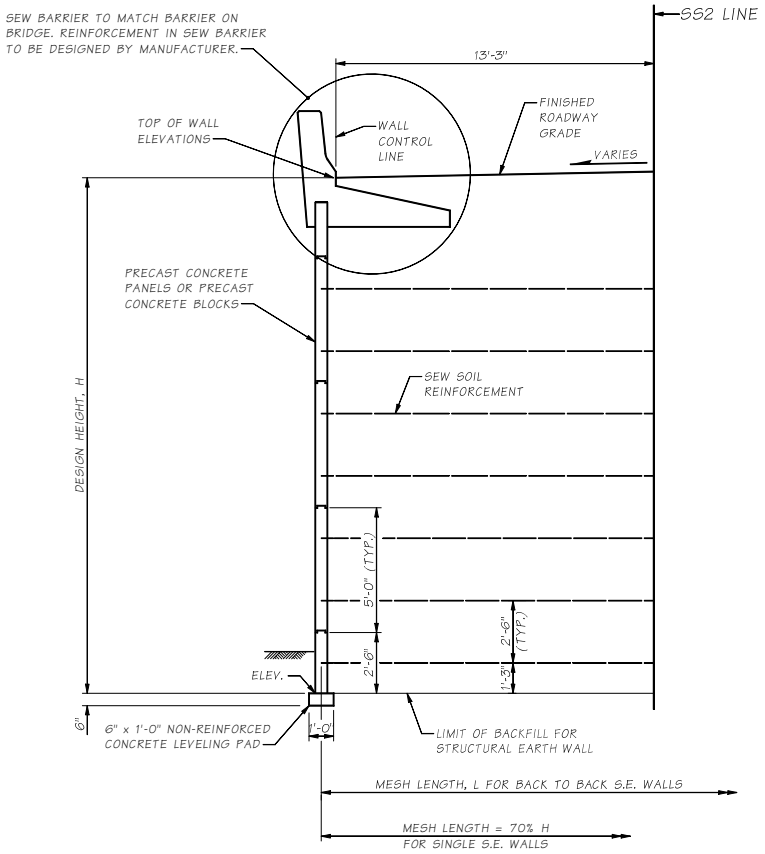

TYPICAL CROSS SECTION

SHEET
JOB NO.
SR

Bridge Design Engr.	M:\STANDARDS\Walls\MSE SECTION.MAN				REGION NO.	STATE	FED. AID PROJ. NO.	SHEET NO.	TOTAL SHEETS	BRIDGE AND STRUCTURES OFFICE
Supervisor					10	WASH.				Washington State Department of Transportation
Designed By					JOB NUMBER					SEW WALL SECTION
Checked By										BRIDGE SHEET NO.
Detailed By										SHEET OF SHEETS
Bridge Projects Engr.										
Prelim. Plan By										
Architect/Specialist	DATE	REVISION	BY	APP'D						

Fri Sep 03 11:29:52 2010

8.1-A2-2

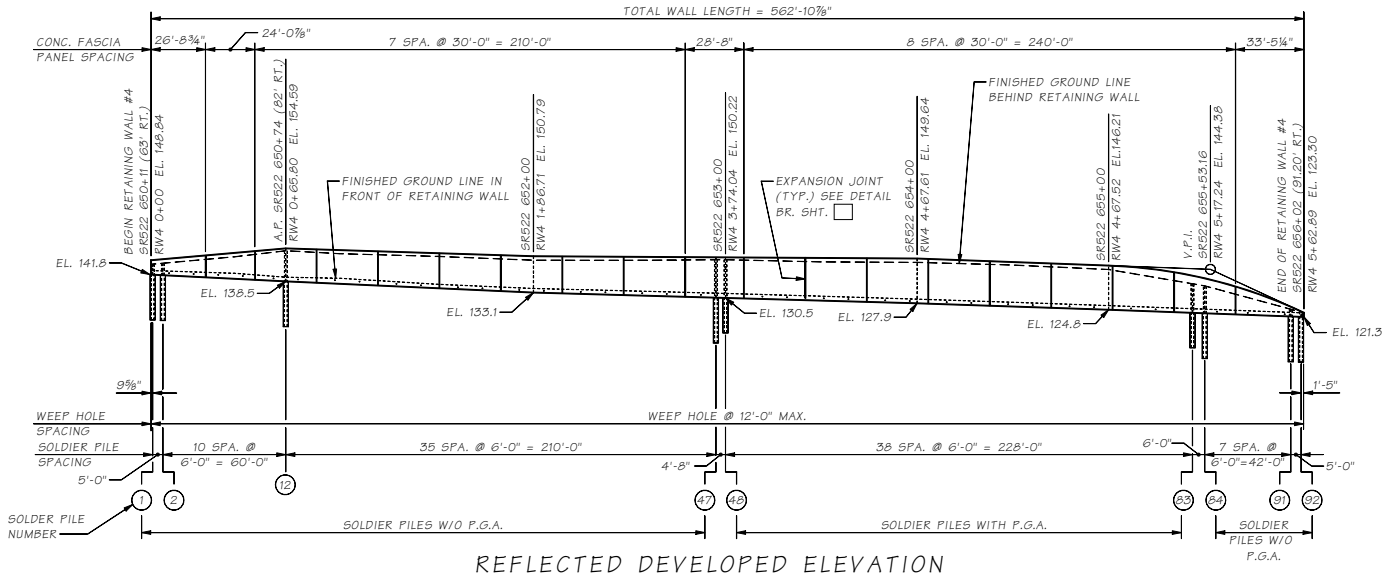

REFLECTED DEVELOPED ELEVATION

A.P. = ANGLE POINT

GENERAL NOTES

(FOR SOLDIER PILES WITH P.G.A.)

1. ALL MATERIAL AND WORKMANSHIP SHALL BE IN ACCORDANCE WITH THE REQUIREMENTS OF THE WASHINGTON STATE DEPARTMENT OF TRANSPORTATION STANDARD SPECIFICATIONS FOR ROAD, BRIDGE AND MUNICIPAL CONSTRUCTION-ENGLISH, DATED 2010, AND AMENDMENTS.
2. THIS STRUCTURE HAS BEEN DESIGNED IN ACCORDANCE WITH THE REQUIREMENTS OF THE AASHTO LRFD BRIDGE DESIGN SPECIFICATIONS - 4TH EDITION - 2007 WITH INTERIMS THRU 2009.
3. W SECTION STEEL SOLDIER PILES SHALL CONFORM TO ASTM A992. HP SECTION STEEL SOLDIER PILES SHALL CONFORM TO ASTM A572. SOLDIER PILES SHALL BE PAINTED TO THE LIMITS SHOWN IN THE PLANS IN ACCORDANCE WITH SECTION 6-16.3(4).
4. PLATES FOR THE SOLDIER PILE ASSEMBLY STIFFENER SHALL CONFORM TO ASSTM A572 GR. 50. THE 8"ø EXTRA STRONG PIPE SHALL CONFORM TO THE REQUIREMENTS OF ASTM A53 GR. B.
5. ALL WELDING SHALL BE DONE TO MINIMIZE DISTORTION. THE WELDING SEQUENCES AND PROCEDURES TO BE USED SHALL BE SUBMITTED TO THE ENGINEER FOR APPROVAL PRIOR TO THE START OF WELDING.
6. UNLESS OTHERWISE SHOWN IN THE PLANS, THE CONCRETE COVER MEASURED FROM THE FACE OF THE CONCRETE TO THE FACE OF ANY REINFORCING STEEL SHALL BE 1½".
7. ALL DIMENSIONS ARE HORIZONTAL AND VERTICAL UNLESS OTHERWISE SHOWN.
8. EXISTING GROUND LINE IS APPROXIMATE AND SHALL BE VERIFIED BY THE CONTRACTOR IN THE FIELD.
9. PERMANENT GROUND ANCHOR LOCK OFF LOAD = 60 PERCENT OF FACTORED DESIGN LOAD.

GENERAL NOTES

(FOR SOLDIER PILES WITHOUT P.G.A.)

1. ALL MATERIAL AND WORKMANSHIP SHALL BE IN ACCORDANCE WITH THE REQUIREMENTS OF THE WASHINGTON STATE DEPARTMENT OF TRANSPORTATION STANDARD SPECIFICATIONS FOR ROAD, BRIDGE AND MUNICIPAL CONSTRUCTION-ENGLISH, DATED 2010, AND AMENDMENTS.
2. THIS STRUCTURE HAS BEEN DESIGNED IN ACCORDANCE WITH THE REQUIREMENTS OF THE AASHTO LRFD BRIDGE DESIGN SPECIFICATIONS - 4TH EDITION - 2007 WITH INTERIMS THRU 2009.
3. W SECTION STEEL SOLDIER PILES SHALL CONFORM TO ASTM A992. HP SECTION STEEL SOLDIER PILES SHALL CONFORM TO ASTM A572. SOLDIER PILES SHALL BE PAINTED TO THE LIMITS SHOWN IN THE PLANS IN ACCORDANCE WITH SECTION 6-16.3(4).
4. UNLESS OTHERWISE SHOWN IN THE PLANS, THE CONCRETE COVER MEASURED FROM THE FACE OF THE CONCRETE TO THE FACE OF ANY REINFORCING STEEL SHALL BE 1½".
5. ALL DIMENSIONS ARE HORIZONTAL AND VERTICAL UNLESS OTHERWISE SHOWN.
6. EXISTING GROUND LINE IS APPROXIMATE AND SHALL BE VERIFIED BY THE CONTRACTOR IN THE FIELD.

SOLDIER PILE/TIEBACK WALL

Bridge Design Engr.	M:\STANDARDS\Walls\SOLDIER TIEBACK ELEV.MAN				REGION NO.	STATE	FED. AID PROJ. NO.	SHEET NO.	TOTAL SHEETS	BRIDGE AND STRUCTURES OFFICE
Supervisor					10	WASH.				Washington State Department of Transportation
Designed By					JOB NUMBER					SOLDIER PILE/TIEBACK WALL ELEVATION
Checked By										BRIDGE SHEET NO.
Detailed By										SHEET OF SHEETS
Bridge Projects Engr.										
Prelim. Plan By										
Architect/Specialist	DATE	REVISION	BY	APP'D						

SR ____ SHEET ____ JOB NO. ____

8.1-A3-1

Fri Sep 03 11:29:53 2010

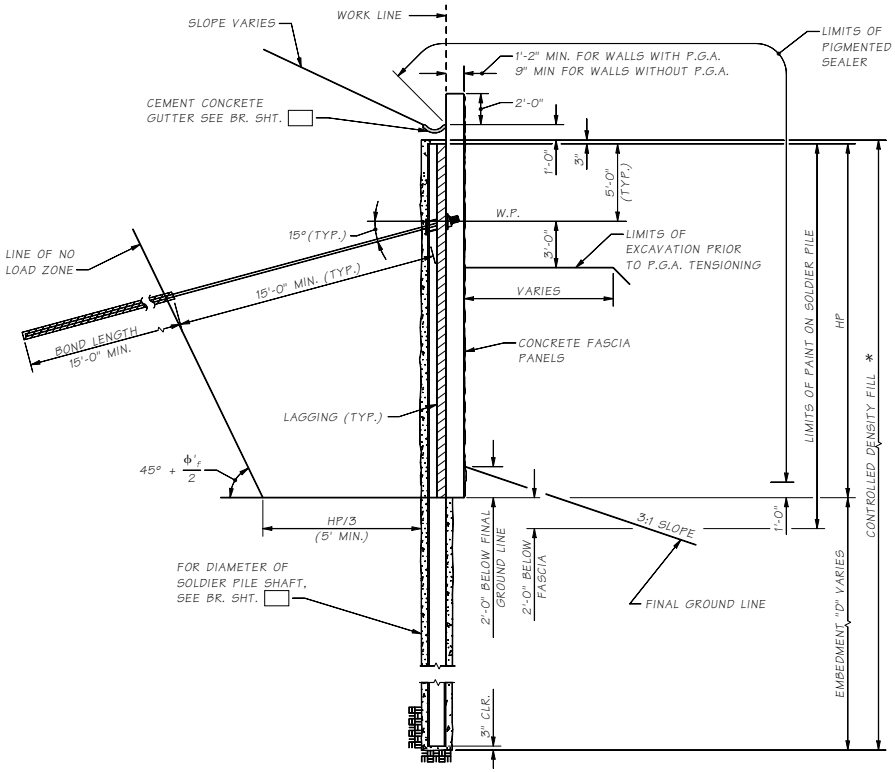

TYPICAL SECTION

SHOWN FOR SOLDIER PILE WITH P.G.A.
SIMILAR FOR SOLDIER PILE WITHOUT P.G.A.

P.G.A.= PERMANENT GROUND ANCHOR

LAGGING SYSTEM SHALL BE DESIGNED BY THE CONTRACTOR AND SUBMITTED TO THE ENGINEER FOR APPROVAL IN ACCORDANCE WITH THE STANDARD SPECIFICATION SECTION 6-16.3(6).

* USE CONTROLLED DENSITY FILL WHEN PLACED IN THE DRY. USE PUMPABLE LEAN CONCRETE WHEN PLACED IN THE WET.

Note to Designer:
For walls with P.G.A. use a section size with a flange width bigger than or equal to HP12x53 or W12x65

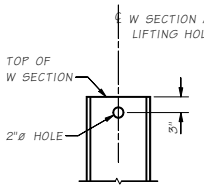

SOLDIER PILE LIFTING HOLE

LIFTING HOLE TO BE DRILLED IN THE SHOP PRIOR TO PAINTING THE PILE.

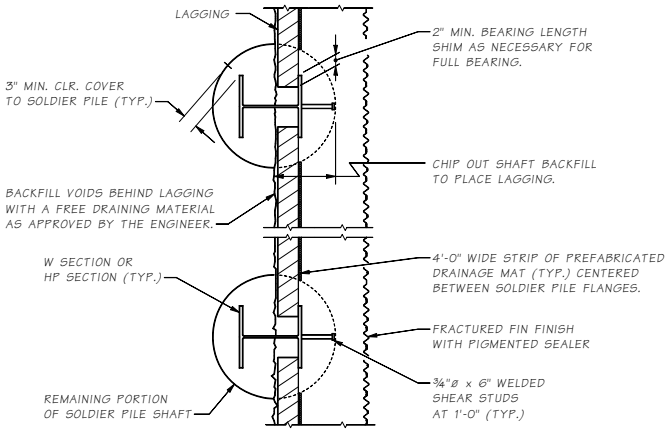

PLAN SOLDIER PILE WALL WITHOUT P. G. A.

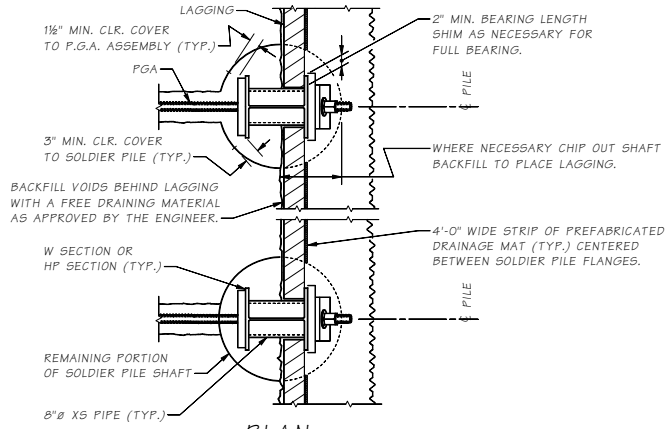

PLAN SOLDIER PILE WALL WITH P. G. A.

LAGGING IN SERVICE LESS THAN 36 MONTHS

Bridge Design Engr.	M:\STANDARDS\Walls\SOLDIER TIEBACK DETAILS A.MAN				REGION NO.	STATE	FED. AID PROJ. NO.	SHEET NO.	TOTAL SHEETS
Supervisor					10	WASH.			
Designed By					JOB NUMBER				
Checked By									
Detailed By									
Bridge Projects Engr.									
Prelim. Plan By									
Architect/Specialist	DATE	REVISION	BY	APP'D					

BRIDGE AND STRUCTURES OFFICE

Washington State Department of Transportation

SOLDIER PILE/TIEBACK WALL DETAILS 1 OF 2

BRIDGE SHEET NO. | SHEET | OF | SHEETS

JOB NO. | SHEET | SR

8.1-A3-2

Fri Sep 03 11:29:55 2010

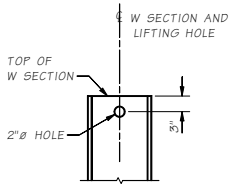

SOLDIER PILE LIFTING HOLE

LIFTING HOLE TO BE DRILLED IN THE SHOP PRIOR TO PAINTING THE PILE.

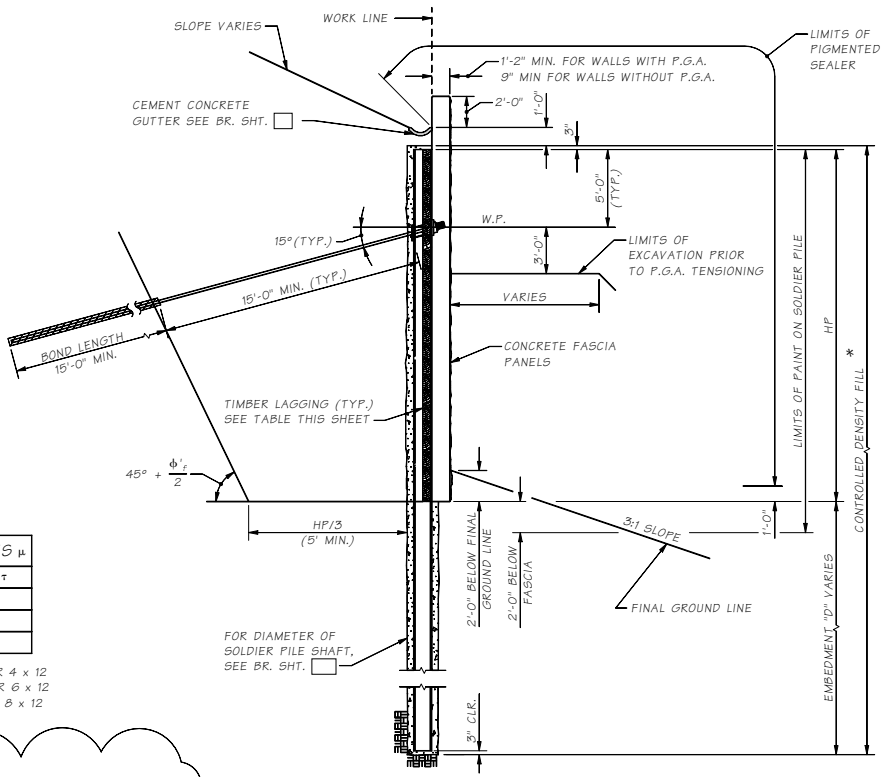

TYPICAL SECTION

SHOWN FOR SOLDIER PILE WITH P.G.A.
SIMILAR FOR SOLDIER PILE WITHOUT P.G.A.

P.G.A.= PERMANENT GROUND ANCHOR

* USE CONTROL DENSITY FILL WHEN PLACED IN THE DRY. USE PUMPABLE LEAN CONCRETE WHEN PLACED IN THE WET.

TIMBER LAGGING SIZES μ	
DEPTH (FT) τ	SIZE τ
0 - 9	4 x
9 - 18	6 x
18 - 30	8 x

4 x - OPTIONAL 4 x 8, 4 x 10 OR 4 x 12
6 x - OPTIONAL 6 x 8, 6 x 10 OR 6 x 12
8 x - OPTIONAL 8 x 8, 8 x 10 OR 8 x 12

Notes to Designer:

τ Depths and sizes shown are for example only. Fill in the table according to the earth pressure diagram and recommendations from the Geotechnical Services Branch, based on LRFD timber design for permanent lagging.

μ Determine, if possible, the length of time that the wall lagging will be used as the primary structural member in the transverse direction before a permanent wall fascia is applied.

For walls with P.G.A. use a section size with a flange width bigger than or equal to HP12x53 or W12x65.

For walls without concrete fascia panels:
1. Hem-fir timber lagging shall not be used.
2. Douglas fir-larch, grade no. 2 or better, treated in accordance with section 9-09.3(1), shall be used and shall be specified in the plan sheets and Special Provisions.

LAGGING IN SERVICE 36 MONTHS OR LONGER

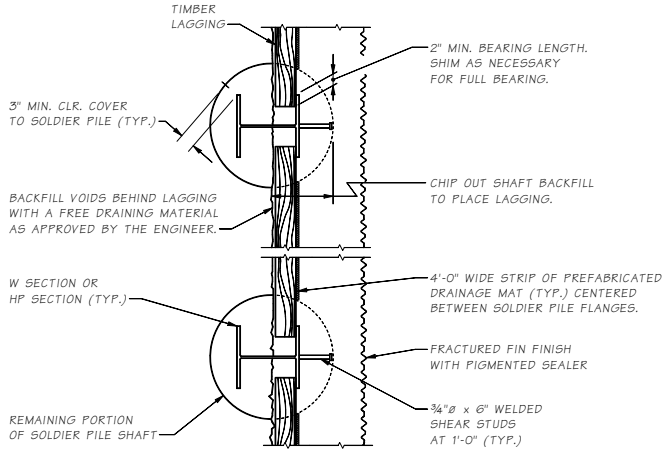

PLAN SOLDIER PILE WALL WITHOUT P. G. A.

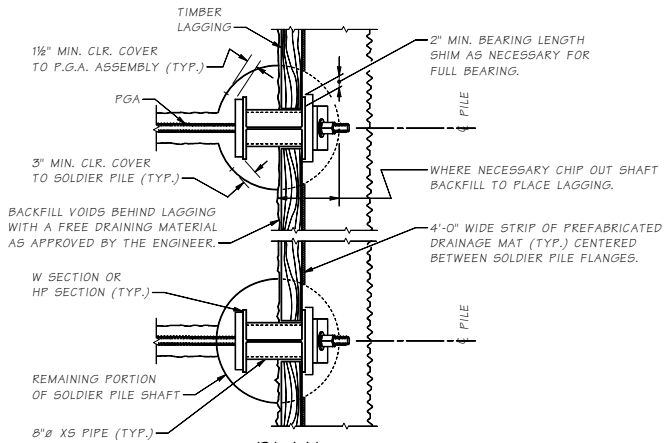

PLAN SOLDIER PILE WALL WITH P. G. A.

Bridge Design Engr.	M:\STANDARDS\Walls\SOLDIER TIEBACK DETAILS B.MAN				REGION NO.	STATE	FED. AID PROJ. NO.	SHEET NO.	TOTAL SHEETS	BRIDGE SHEET NO.
Supervisor					10	WASH.				
Designed By										SHEET
Checked By					JOB NUMBER					OF
Detailed By										SHEETS
Bridge Projects Engr.										
Prelim. Plan By										
Architect/Specialist	DATE	REVISION	BY	APP'D						

BRIDGE AND STRUCTURES OFFICE

Washington State Department of Transportation

SOLDIER PILE/TIEBACK WALL DETAILS 1 OF 2

SR JOB NO. SHEET

8.1-A3-3

Fri Sep 03 11:29:57 2010

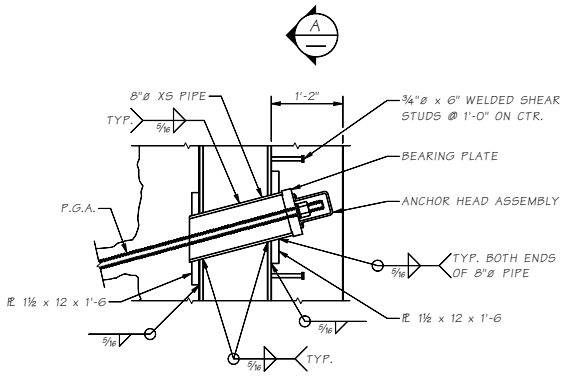

ELEVATION - SOLDIER PILE WITH P.G.A. THRU WEB

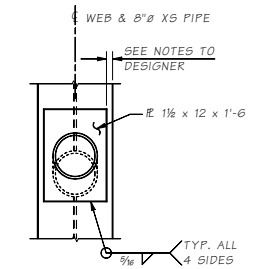

VIEW A

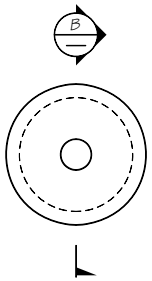

BEARING PLATE

BEARING PLATE SHALL BE DESIGNED BY THE CONTRACTOR AND SUBMITTED TO THE ENGINEER FOR APPROVAL IN ACCORDANCE WITH THE STANDARD SPECIFICATION SECTION 6-17.3(5).

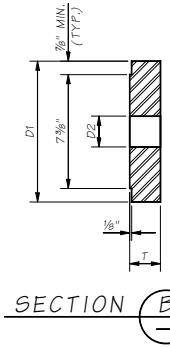

SECTION B

Notes to Designer:

1. Plates must be checked for size and welds. Plates are used to replace flange steel removed for pipe installation.
2. Weld must be checked along web to pipe and plate to flange. welds must be capable of tranferring PGA loads and flexural loads.
3. For walls with P.G.A. use a section size with a flange width bigger than or equal to HP12x53 or W12x65.

Bridge Design Engr.	M:\STANDARDS\Walls\SOLDIER TIEBACK DETAILS 2.MAN				REGION NO.	STATE	FED. AID PROJ. NO.	SHEET NO.	TOTAL SHEETS	BRIDGE AND STRUCTURES OFFICE
Supervisor					10	WASH.				Washington State Department of Transportation
Designed By										
Checked By					JOB NUMBER					SOLDIER PILE/TIEBACK WALL DETAILS 2 OF 2
Detailed By										BRIDGE SHEET NO.
Bridge Projects Engr.										SHEET
Prelim. Plan By										OF
Architect/Specialist	DATE	REVISION	BY	APP'D						SHEETS

Fri Sep 03 11:30:00 2010

SR ____ JOB NO. ____ SHEET

8.1-A3-4

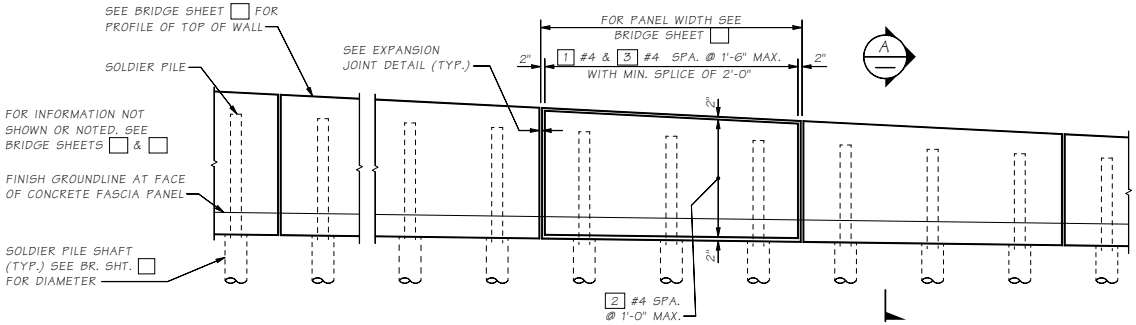

PARTIAL WALL ELEVATION

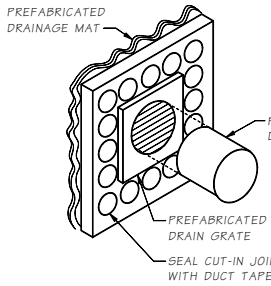

ISOMETRIC VIEW

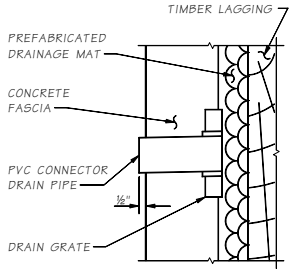

SECTIONAL VIEW

WEEP HOLE DRAIN DETAILS

DRAIN GRATE INSTALLATION SHALL NOT DISRUPT PREFABRICATED DRAINAGE MAT

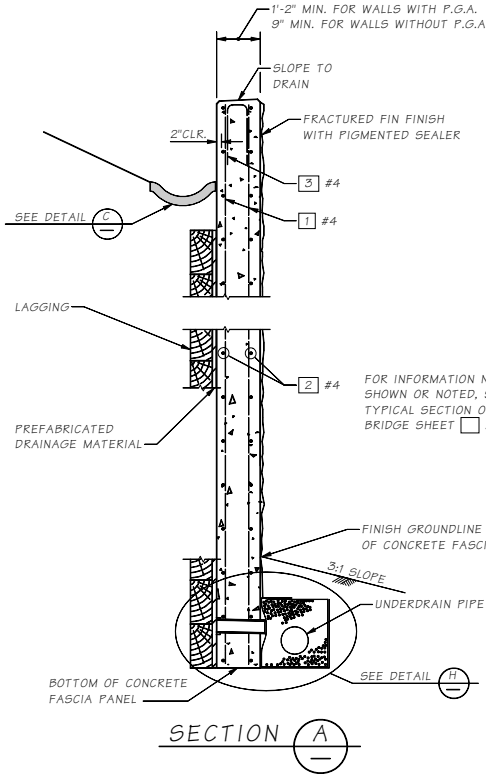

SECTION A

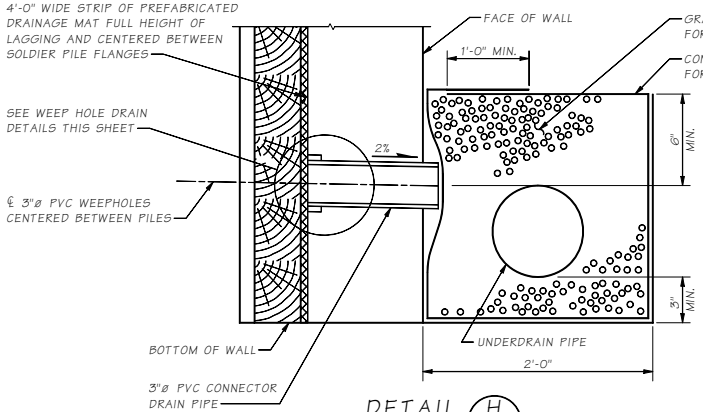

DETAIL H

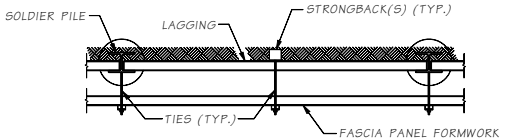

TYPICAL FASCIA PANEL FORMWORK

- SEE SECTION 6-16.3(2) FOR FASCIA PANEL FORMING REQUIREMENTS.
- STRONGBACK(S) AND TIES SPACED AS REQUIRED FOR FORMING.

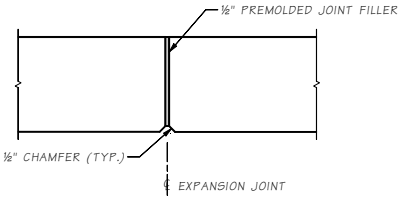

EXPANSION JOINT DETAIL

NOTE:
EXPANSION JOINTS SHALL BE LOCATED AS SHOWN ON BRIDGE SHEET ☐

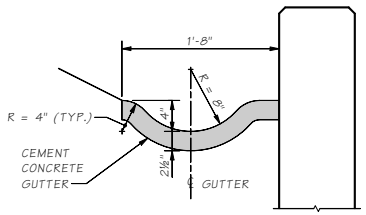

DETAIL C

Bridge Design Engr.	M:\STANDARDS\Walls\SOLDIER TIEBACK FASCIA.MAN				REGION NO.	STATE	FED. AID PROJ. NO.	SHEET NO.	TOTAL SHEETS
Supervisor					10	WASH.			
Designed By					JOB NUMBER				
Checked By									
Detailed By									
Bridge Projects Engr.									
Prelim. Plan By									
Architect/Specialist	DATE	REVISION	BY	APP'D					

BRIDGE AND STRUCTURES OFFICE

Washington State Department of Transportation

SOLDIER PILE/TIEBACK WALL FASCIA PANEL DETAILS

BRIDGE SHEET NO. SHEET OF SHEETS

SR ____ SHEET ____ JOB NO. ____

8.1-A3-5

Fri Sep 03 11:30:02 2010

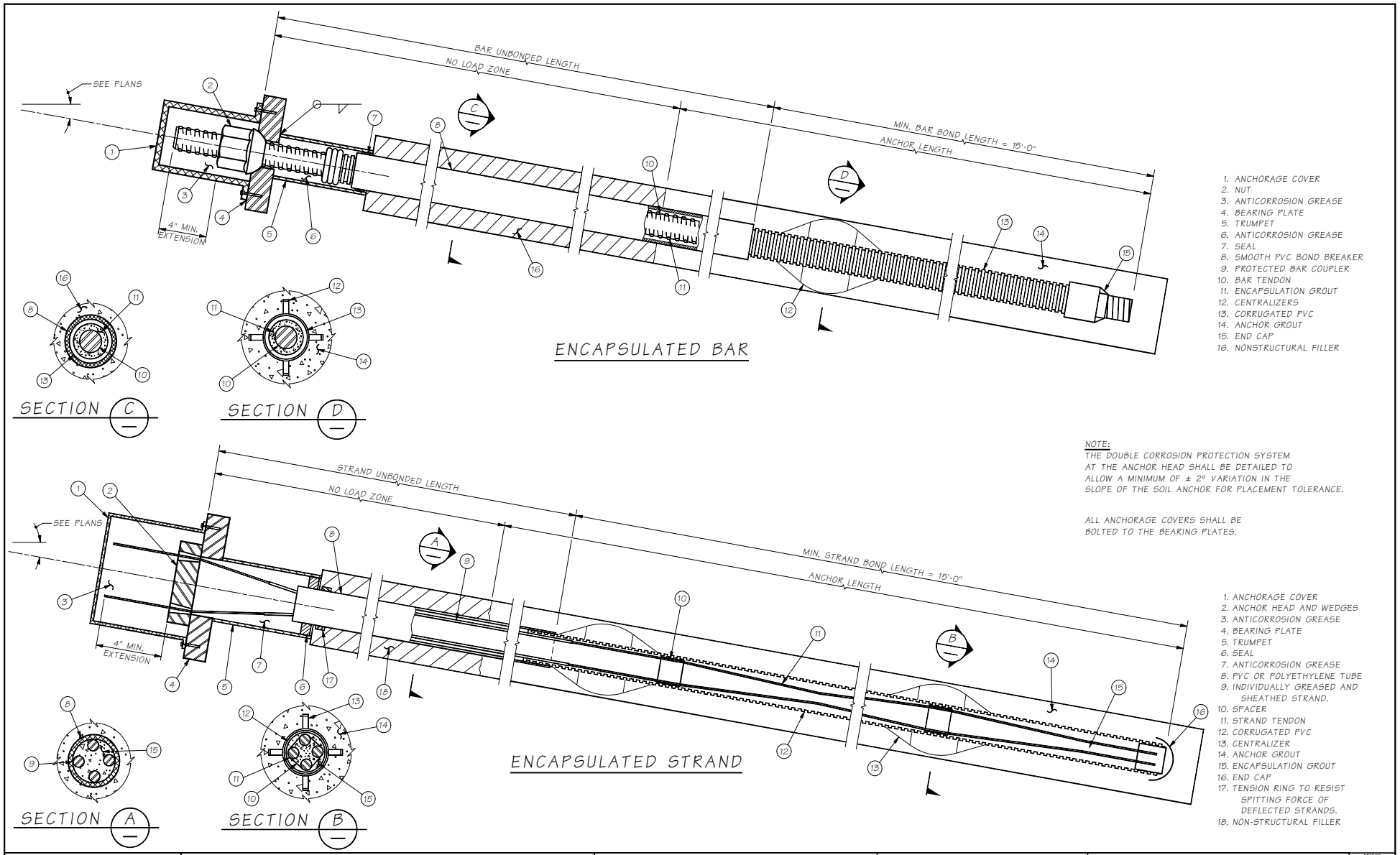

NOTE:
THE DOUBLE CORROSION PROTECTION SYSTEM AT THE ANCHOR HEAD SHALL BE DETAILED TO ALLOW A MINIMUM OF ± 2° VARIATION IN THE SLOPE OF THE SOIL ANCHOR FOR PLACEMENT TOLERANCE.

ALL ANCHORAGE COVERS SHALL BE BOLTED TO THE BEARING PLATES.

SHEET
JOB NO.
SR

Bridge Design Engr.	M:\STANDARDS\Walls\PERMANENT_GROUND_ANCHOR.MAN				REGION NO.	STATE	FED. AID PROJ. NO.	SHEET NO.	TOTAL SHEETS
Supervisor					10	WASH.			
Designed By					JOB NUMBER				
Checked By									
Detailed By									
Bridge Projects Engr.									
Prelim. Plan By									
Architect/Specialist	DATE	REVISION	BY	APPD					

BRIDGE AND STRUCTURES OFFICE

Washington State Department of Transportation

SOLDIER PILE/TIEBACK WALL
PERMANENT GROUND ANCHOR DETAILS

BRIDGE SHEET NO.
SHEET
OF
SHEETS

Fri Sep 10 13:34:11 2010

8.1-A3-6

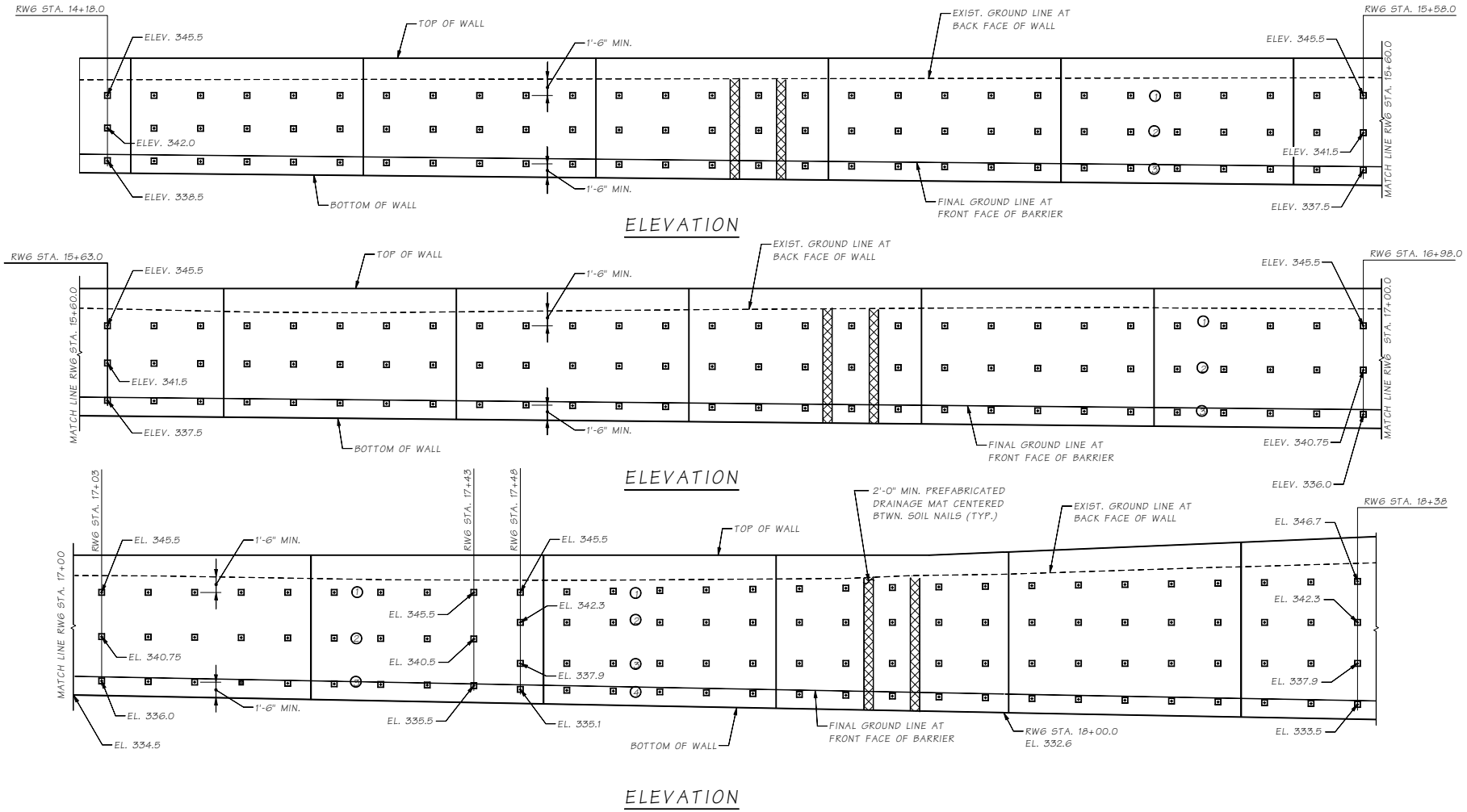

Bridge Design Engr.	M:\STANDARDS\Walls\SOIL NAIL ELEVATION.MAN				REGION NO.	STATE	FED. AID PROJ. NO.	SHEET NO.	TOTAL SHEETS	BRIDGE AND STRUCTURES OFFICE
Supervisor					10	WASH.				Washington State Department of Transportation
Designed By					JOB NUMBER					SOIL NAIL LAYOUT
Checked By										BRIDGE SHEET NO.
Detailed By										SHEET
Bridge Projects Engr.										OF
Prelim. Plan By										SHEETS
Architect/Specialist	DATE	REVISION	BY	APP'D						

Fri Sep 03 11:30:04 2010

SR JOB NO. SHEET

8.1-A4-1

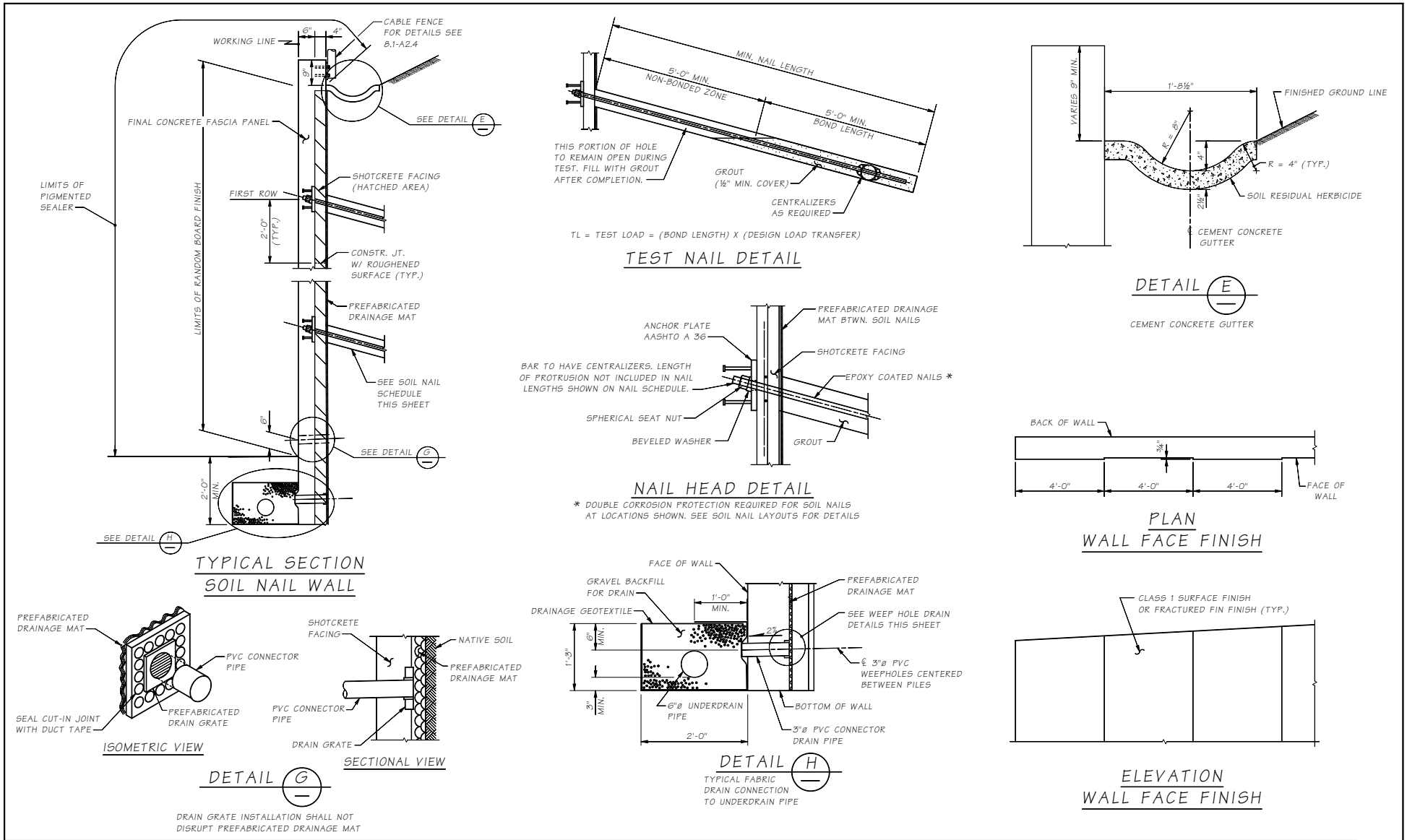

Bridge Design Engr.	M:\STANDARDS\Walls\SOIL NAIL TYP SECT.MAN				REGION NO.	STATE	FED. AID PROJ. NO.	SHEET NO.	TOTAL SHEETS	BRIDGE AND STRUCTURES OFFICE
Supervisor					10	WASH.				
Designed By					JOB NUMBER					
Checked By										
Detailed By										
Bridge Projects Engr.										
Prelim. Plan By										
Architect/Specialist	DATE	REVISION	BY	APP'D						

Washington State Department of Transportation

SOIL NAIL WALL SECTION

BRIDGE SHEET NO.

SHEET OF SHEETS

SR JOB NO. SHEET

Fri Sep 03 11:30:06 2010

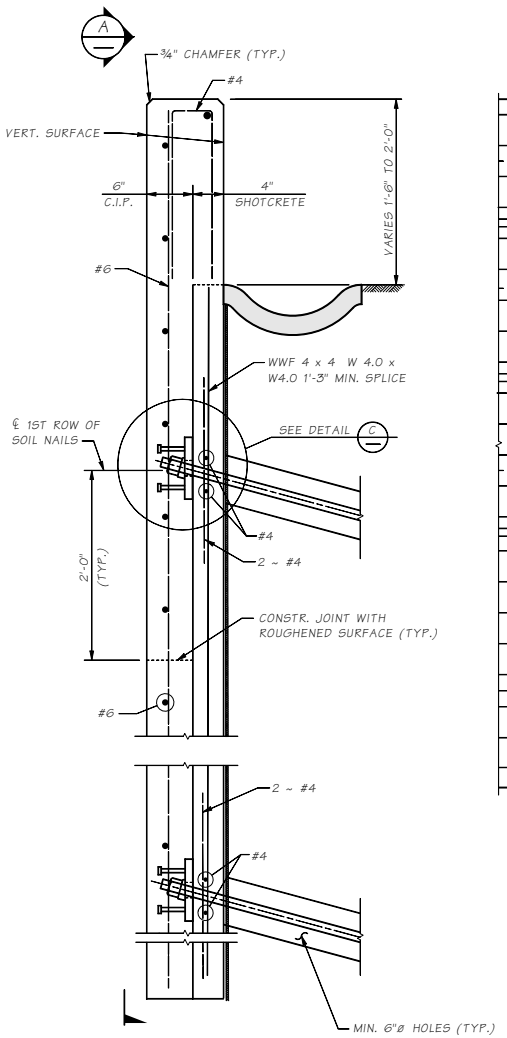

TYPICAL SECTION

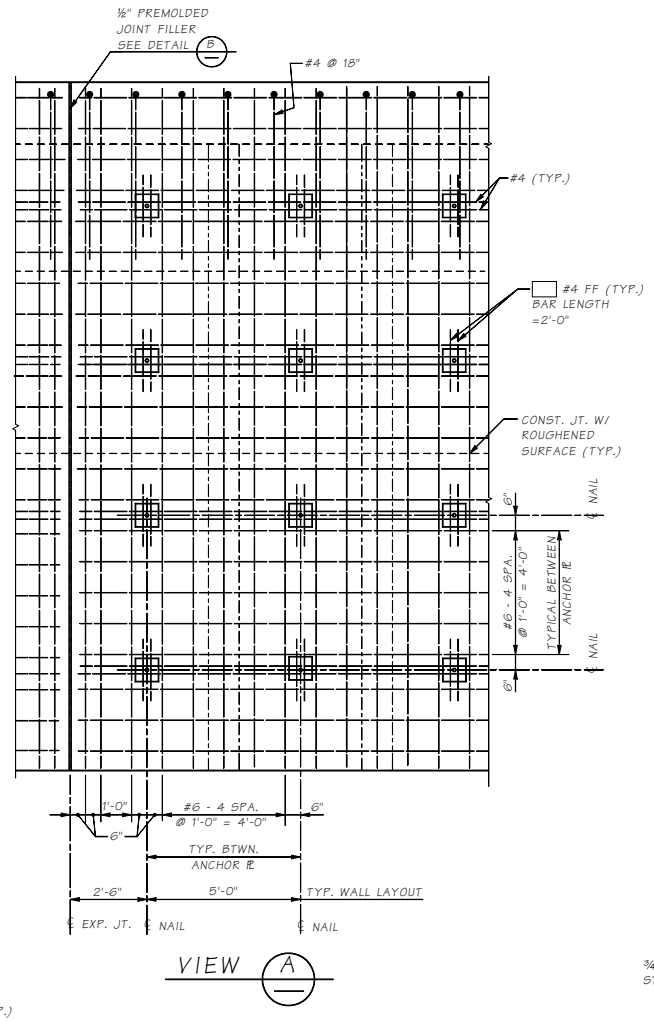

VIEW A

FASCIA WALL REINFORCEMENT

WWF NOT SHOWN FOR CLARITY

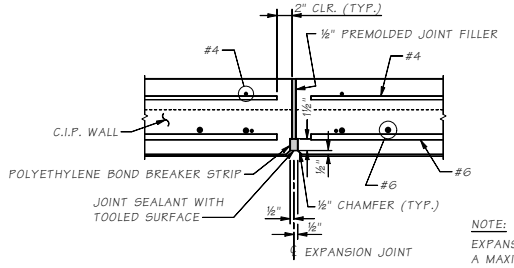

DETAIL B

NOTE:

EXPANSION JOINTS TO BE LOCATED AT A MAXIMUM SPACING OF 24'-0" C. TO C., CENTERED BETWEEN NAILS, EXCEPT IF THE JOINT IS WITHIN 1'-6" OF A STEP AT THE TOP OF WALL, THE JOINT IS TO BE LOCATED AT THAT STEP.

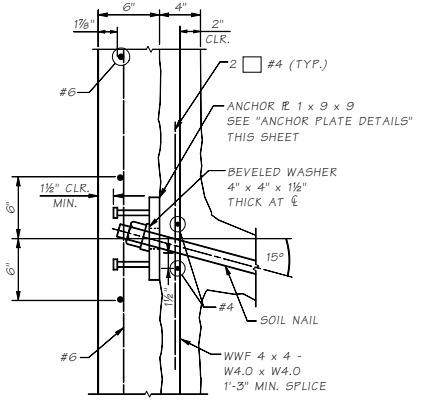

DETAIL C

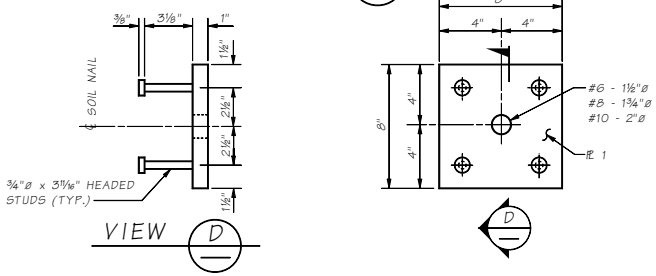

VIEW D

ANCHOR PLATE DETAILS

AASHTO A 36

Bridge Design Engr.	M:\STANDARDS\Walls\SOIL NAIL FASCIA.MAN								
Supervisor					REGION NO.	STATE	FED. AID PROJ. NO.	SHEET NO.	TOTAL SHEETS
Designed By					10	WASH.			
Checked By					JOB NUMBER				
Detailed By									
Bridge Projects Engr.									
Prelim. Plan By									
Architect/Specialist	DATE	REVISION	BY	APP'D					

BRIDGE AND STRUCTURES OFFICE

Washington State Department of Transportation

SOIL NAIL WALL FASCIA PANEL DETAILS

BRIDGE SHEET NO. SHEET OF SHEETS

SR JOB NO. SHEET

8.1-A4-3

Fri Sep 03 11:30:08 2010

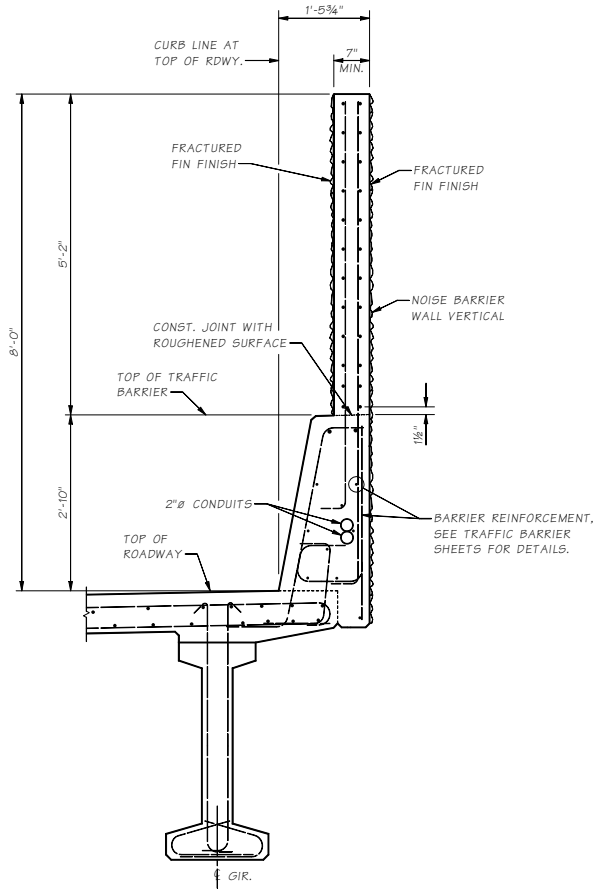

NOISE BARRIER WALL
ON BRIDGE

Bridge Design Engr.	M:\STANDARDS\Walls\NOISE BARRIER ON BRIDGE.MAN									
Supervisor										
Designed By										
Checked By										
Detailed By										
Bridge Projects Engr.										
Prelim. Plan By										
Architect/Specialist	DATE	REVISION	BY	APP'D						

Fri Sep 03 11:30:11 2010

BRIDGE AND STRUCTURES OFFICE

Washington State Department of Transportation

NOISE BARRIER ON BRIDGE

BRIDGE SHEET NO.

SHEET OF SHEETS

SR JOB NO. SHEET

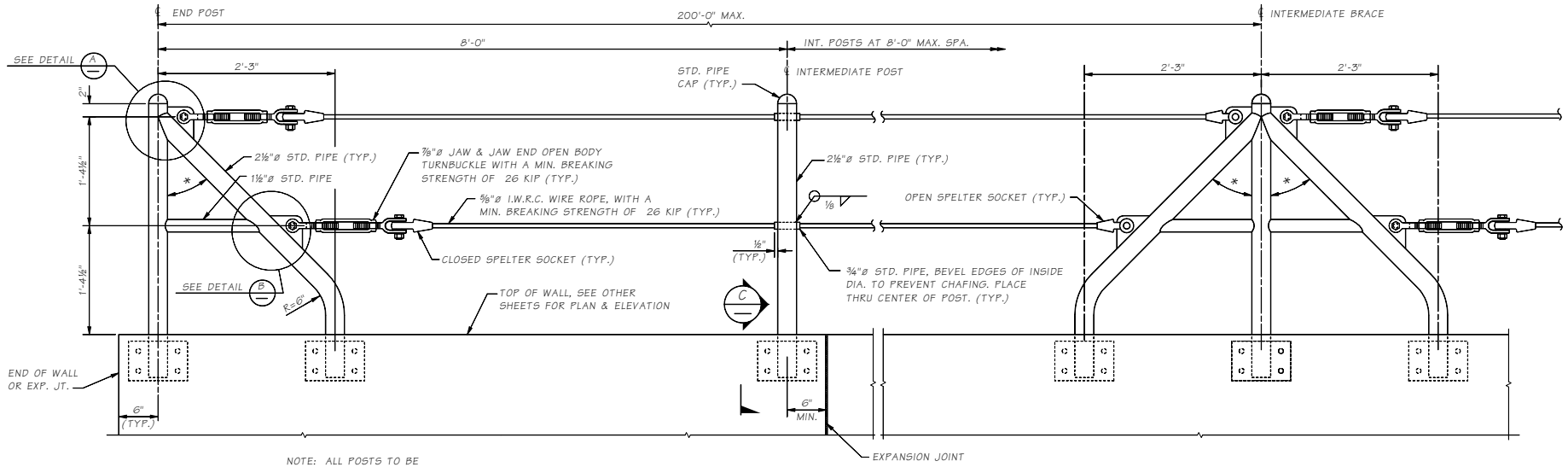

NOTE: ALL POSTS TO BE INSTALLED VERTICAL.

* ANGLES VARY (45 APPROX.) WITH THE SLOPE OF THE TOP OF WALL.

ELEVATION - CABLE RAIL

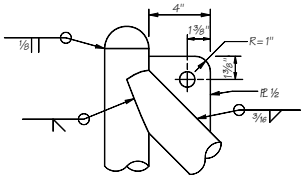

DETAIL A

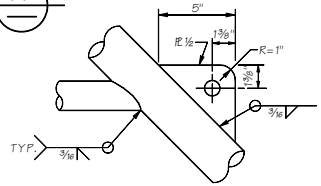

DETAIL B

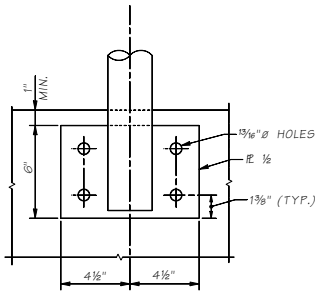

VIEW D

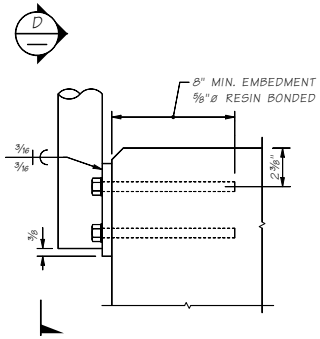

SECTION C

NOTES:

1. ALL PIPE SHALL BE STEEL PIPE ASTM A53 GRADE B.
2. ALL STEEL PLATE SHALL BE ASTM A 36.
3. ALL PARTS EXCEPT WIRE ROPE SHALL BE HOT DIP GALVANIZED IN ACCORDANCE WITH AASHTO M111 OR M232 AFTER FABRICATION.
4. SPELTER SOCKETS AND SOCKETING PROCEDURE SHALL BE AS PER ROPE MANUFACTURER.
5. WIRE ROPE SHALL BE INSTALLED TO 0.4 KIP TENSION LEAVING 6" OF TAKE UP AVAILABLE IN THE TURNBUCKLE.
6. EACH CONTINUOUS LENGTH OF CABLE SHALL HAVE A TURNBUCKLE AT ONE END ONLY AND BE ANCHORED TO END POST WITH BRACE AT BOTH ENDS.
7. CENTER SUPPORT NOT TO BE INSTALLED ACROSS EXPANSION JOINT.
8. ALL POSTS TO BE INSTALLED VERTICAL.

Bridge Design Engr.	M:\STANDARDS\Walls\CABLE RAIL.MAN				REGION NO.	STATE	FED. AID PROJ. NO.	SHEET NO.	TOTAL SHEETS
Supervisor					10	WASH.			
Designed By					JOB NUMBER				
Checked By									
Detailed By									
Bridge Projects Engr.									
Prelim. Plan By									
Architect/Specialist	DATE	REVISION	BY	APP'D					

BRIDGE AND STRUCTURES OFFICE

Washington State Department of Transportation

CABLE FENCE - SIDE MOUNT

BRIDGE SHEET NO. SHEET OF SHEETS

JOB NO. SHEET SR 8.1-A6-1

Fri Sep 03 11:30:12 2010

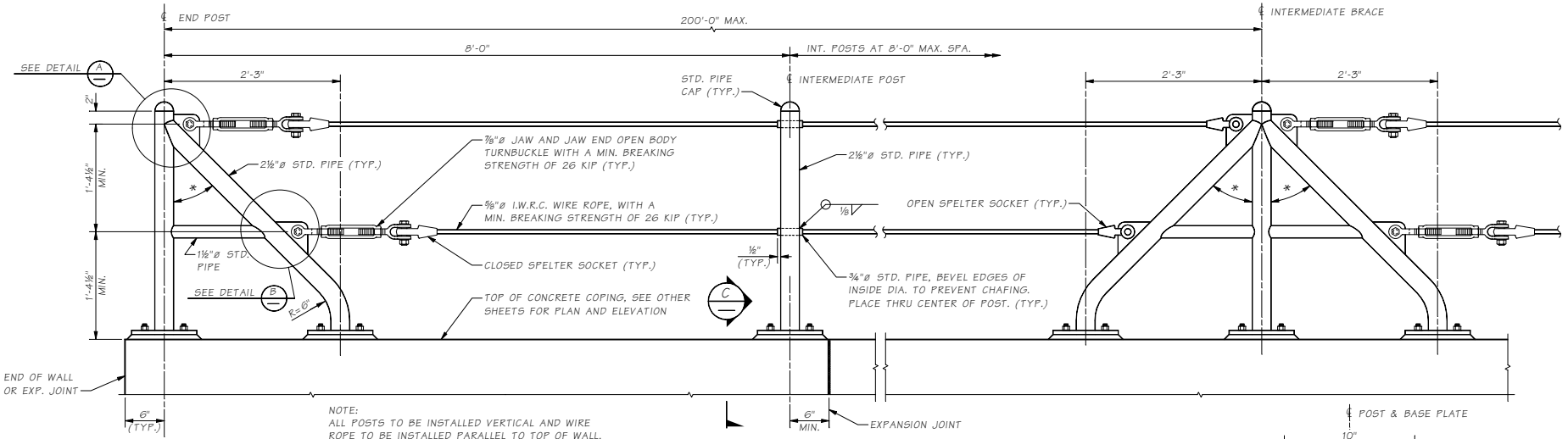

ELEVATION - CABLE FENCE

* ANGLES VARY (45° APPROX.) WITH THE SLOPE OF THE TOP OF WALL.

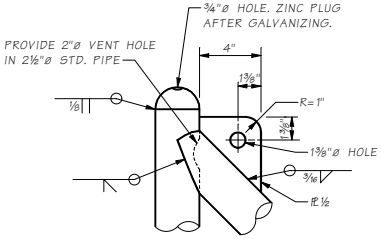

DETAIL A

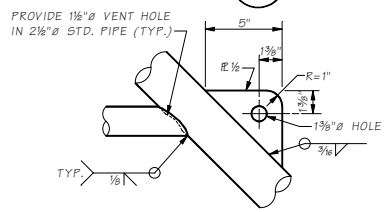

DETAIL B

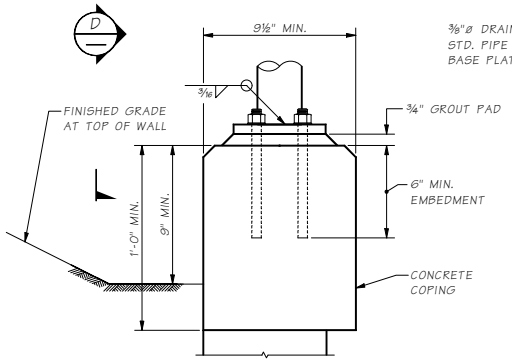

SECTION C

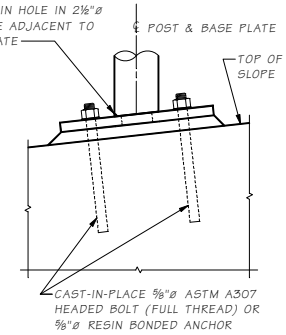

VIEW D

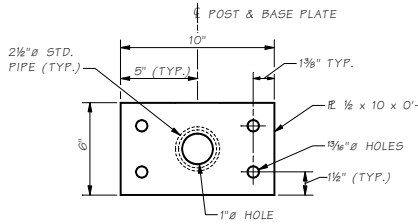

BASE PLATE DETAIL

NOTES:

1. ALL PIPE SHALL BE STEEL PIPE ASTM A53 GRADE B.
2. ALL STEEL PLATE SHALL BE ASTM A 36.
3. WIRE ROPE SHALL CONFORM TO ASTM A 603 WITH CL. A WEIGHT ZINC-COATED WIRES.
4. ALL PARTS EXCEPT WIRE ROPE SHALL BE HOT DIP GALVANIZED IN ACCORDANCE WITH AASHTO M111 OR M232 AFTER FABRICATION, UNLESS NOTED OTHERWISE.
5. SPELTER SOCKETS AND SOCKETING PROCEDURE SHALL BE AS PER ROPE MANUFACTURER.
6. WIRE ROPE SHALL BE INSTALLED TO 400 LBS TENSION LEAVING A TAKE UP OF 6" STILL AVAILABLE IN THE TURNBUCKLE.
7. EACH CONTINUOUS LENGTH OF CABLE SHALL HAVE A TURNBUCKLE AT ONE END ONLY AND BE ANCHORED TO END POST WITH BRACE AT BOTH ENDS.
8. INTERMEDIATE POSTS AND BRACES SHALL NOT TO BE INSTALLED ACROSS EXPANSION JOINT.
9. CABLE FENCE WAS DESIGNED FOR A 200 LB. LOAD ON THE TOP RAIL APPLIED IN ANY DIRECTION, AS REQUIRED BY WASHINGTON ADMINISTRATIVE CODE 296-155-505.
10. CABLE FENCE SHALL BE DARK BROWN FEDERAL COLOR 595B 20045.

Bridge Design Engr.	M:\STANDARDS\Walls\CABLE RAILING TOP MOUNTED.MAN				REGION NO.	STATE	FED. AID PROJ. NO.	SHEET NO.	TOTAL SHEETS	BRIDGE AND STRUCTURES OFFICE
Supervisor					10	WASH.				Washington State Department of Transportation
Designed By					JOB NUMBER					CABLE FENCE - TOP MOUNT
Checked By										BRIDGE SHEET NO.
Detailed By										SHEET
Bridge Projects Engr.										OF
Prelim. Plan By										SHEETS
Architect/Specialist	DATE	REVISION	BY	APPD						

SR JOB NO. 8.1-A6-2 SHEET

Fri Sep 10 11:43:28 2010

Chapter 9 Bearings & Expansion Joints Contents

9.1 Expansion Joints 9.1-1
9.1.1 General Considerations 9.1-1
9.1.2 General Design Criteria 9.1-3
9.1.3 Small Movement Range Joints 9.1-4
9.1.4 Medium Movement Range Joints 9.1-10
9.1.5 Large Movement Range Joints 9.1-13

9.2 Bearings 9.2-1
9.2.1 General Considerations 9.2-1
9.2.2 Force Considerations 9.2-1
9.2.3 Movement Considerations 9.2-1
9.2.4 Detailing Considerations 9.2-2
9.2.5 Bearing Types 9.2-2
9.2.6 Miscellaneous Details 9.2-7
9.2.7 Contract Drawing Representation 9.2-8
9.2.8 Shop Drawing Review 9.2-8
9.2.9 Bearing Replacement Considerations 9.2-8

Appendix 9.1-A1-1 Expansion Joint Details Compression Seal 9.1-A1-1
Appendix 9.1-A2-1 Expansion Joint Details Strip Seal 9.1-A2-1
Appendix 9.1-A3-1 Silicone Seal Expansion Joint Details 9.1-A3-1

9.1 Expansion Joints

9.1.1 General Considerations

All bridges must accommodate, in some manner, environmentally and self-imposed phenomena that tend to make structures move in various ways. These movements come from several primary sources: thermal variations, concrete shrinkage, creep effects from prestressing, and elastic post-tensioning shortening. With the exception of elastic post-tensioning shortening, which generally occurs before expansion devices are installed, movements from these primary phenomena are explicitly calculated for expansion joint selection and design. Other movement inducing phenomena include live loading (vertical and horizontal braking), wind, seismic events, and foundation settlement. Movements associated with these phenomena are generally either not calculated or not included in total movement calculations for purposes of determining expansion joint movement capacity.

With respect to seismic movements, it is assumed that some expansion joint damage may occur, that this damage is tolerable, and that it will be subsequently repaired. In cases where seismic isolation bearings are used, the expansion joints must accommodate seismic movements in order to allow the isolation bearings to function properly.

Expansion joints must accommodate cyclic and long-term structure movements in such a way as to minimize imposition of secondary stresses in the structure. Expansion joint devices must prevent water, salt, and debris infiltration to substructure elements below. Additionally, an expansion joint device must provide a relatively smooth riding surface over a long service life.

Expansion joint devices are highly susceptible to vehicular impact that results as a consequence of their inherent discontinuity. Additionally, expansion joints have often been relegated a lower level of importance by both designers and contractors. Many of the maintenance problems associated with in-service bridges relate to expansion joints.

One solution to potential maintenance problems associated with expansion joints is to use construction procedures that eliminate the joints from the bridge deck. The two most commonly used methods are called integral and semi-integral construction. These two terms are sometimes collectively referred to as jointless bridge construction. In integral construction, concrete end diaphragms are cast monolithically with both the bridge deck and supporting pile substructure. In order to minimize secondary stresses induced in the superstructure, steel piles are generally used in their weak axis orientation relative to the direction of bridge movement. In semi-integral construction, concrete end diaphragms are cast monolithically with the bridge deck. Supporting girders rest on elastomeric bearings within an L-type abutment. Longer semi-integral bridges generally have reinforced concrete approach slabs at their ends. Approach slab anchors, in conjunction with a compression seal device, connect the monolithic end diaphragm to the approach slab. Longitudinal movements are accommodated by diaphragm movement relative to the approach slab, but at the same time resisted by soil passive pressure against the end diaphragm.

Obviously, bridges cannot be built incrementally longer without eventually requiring expansion joint devices. The incidence of approach pavement distress problems increases markedly with increased movement that must be accommodated by the end diaphragm pressing against the backfill. Approach pavement distress includes pavement and backfill settlement and broken approach slab anchors.

Washington State Department of Transportation (WSDOT) has implemented jointless bridge design by using semi-integral construction. Office policy for concrete and steel bridge design is as follows:

A. **Concrete Bridges** – Semi-integral design is used for prestressed concrete girder bridges under 450 feet long and for post-tensioned spliced concrete girder and cast-in-place post-tensioned concrete box girder bridges under 400 feet long. Use L-type abutments with expansion joints at the bridge ends where bridge length exceeds these values. In situations where bridge skew angles exceed 30 degrees, consult the Bearing and Expansion Joint Specialist and the Bridge Design Engineer for recommendations and approval.

B. **Steel Bridges** – Use L-type abutments with expansion joints at the ends for multiple-span bridges. *Semi-integral* construction may be used in lieu of expansion joints for single span bridges under 300 feet with the approval of the Bridge Design Engineer. In situations where the bridge skew exceeds 30 degrees, consult the Bearing and Expansion Joint Specialist and the Bridge Design Engineer for recommendations and approval.

In all instances, the use of intermediate expansion joints should be avoided wherever possible. The following table provides guidance regarding maximum bridge superstructure length beyond which the use of either intermediate expansion joints or modular expansion joints at the ends is required.

Superstructure Type	Maximum Length (Western WA)		Maximum Length (Eastern WA)	
	Semi-Integral	L-Abutment	Semi-Integral	L-Abutment
Concrete Superstructure				
Prestressed Girder*	450 ft.	900 ft.	450 ft.	900 ft.
P.T. Spliced Girder**	400 ft.	700 ft.***	400 ft.	700 ft.***
C.I.P. - P.T. box girder	400 ft.	700 ft. ***	400 ft.	700 ft.***
Steel Superstructure				
Plate Girder Box girder	300 ft.	1,000 ft.	300 ft.	800 ft.

* Based upon 0.16 in. creep shortening per 100 ft. of superstructure length and 0.12 in. shrinkage shortening per 100 ft. of superstructure length

** Based upon 0.31 in. creep shortening per 100 ft. of superstructure length and 0.19 in. shrinkage shortening per 100 ft. of superstructure length

*** Can be increased to 800 ft. if the joint opening at 64º F at time of construction is specified in the expansion joint table to be less than the minimum installation width of 1½ in. This condition is acceptable if the gland is already installed when steel shapes are placed in the blockout. Otherwise (for example, staged construction) the gland would need to be installed at temperature less than 45º F.

Because the movement restriction imposed by a bearing must be compatible with the movements allowed by the adjacent expansion joint, expansion joints and bearings must be designed interdependently and in conjunction with the anticipated behavior of the overall structure.

A plethora of manufactured devices exists to accommodate a wide range of expansion joint total movements. Expansion joints can be broadly classified into three categories based upon their total movement range as follows:

Small Movement Joints	Total Movement Range < 1¾ in.
Medium Movement Joints	1¾ in. < Total Movement Range < 5 in.
Large Movement Joints	Total Movement Range > 5 in.

9.1.2 General Design Criteria

Expansion joints must be sized to accommodate the movements of several primary phenomena imposed upon the bridge following installation of its expansion joint devices. Concrete shrinkage, thermal variation, and long-term creep are the three most common primary sources of movement. Calculation of the movements associated with each of these phenomena must include the effects of superstructure type, tributary length, fixity condition between superstructure and substructure, and pier flexibilities.

A. **Shrinkage Effects** – Accurate calculation of shrinkage as a function of time requires that average ambient humidity, volume-to-surface ratios, and curing methods be taken in consideration as summarized in LRFD Article 5.4.2.3.3. Because expansion joint devices are generally installed in their respective blockouts at least 30 to 60 days following concrete deck placement, they must accommodate only the shrinkage that occurs from that time onward. For most situations, that shrinkage strain can be assumed to be 0.0002 for normal weight concrete in an unrestrained condition. This value must be corrected for restraint conditions imposed by various superstructure types.

$$\Delta_{shrink} = \beta \cdot \mu \cdot L_{trib} \qquad (9.1.2\text{-}1)$$

Where:

L_{trib} = Tributary length of the structure subject to shrinkage

β = Ultimate shrinkage strain after expansion joint installation; estimated as 0.0002 in lieu of more refined calculations

μ = Restraint factor accounting for the restraining effect imposed by superstructure elements installed before the concrete slab is cast

= 0.0 for steel girders, 0.5 for precast prestressed concrete girders, 0.8 for concrete box girders and T-beams, 1.0 for concrete flat slabs

B. **Thermal Effects** – Bridges are subject to all modes of heat transfer: radiation, convection, and conduction. Each mode affects the thermal gradients generated in a bridge superstructure differently. Climatic influences vary geographically resulting in different seasonal and diurnal average temperature variations. Additionally, different types of construction have different thermal "inertia" properties. For example, a massive concrete box girder bridge will be much slower to respond to an imposed thermal stimulus, particularly a diurnal variation, than would a steel plate girder bridge composed of many relatively thin steel elements.

Variation in the superstructure average temperature produces elongation or shortening. Therefore, thermal movement range is calculated using the maximum and minimum anticipated bridge superstructure average temperatures anticipated during the structure's lifetime. The considerations in the preceding paragraph have led to the following maximum and minimum anticipated bridge superstructure average temperature guidelines for design in Washington State:

Concrete Bridges:	0°F to 100°F
Steel Bridges (eastern Washington)	-30°F to 120°F
Steel Bridges (western Washington)	0°F to 120°F

Total thermal movement range is then calculated as:

$$\Delta_{temp} = \alpha \cdot L_{trib} \cdot \delta T \qquad (9.1.2\text{-}2)$$

Where:

L_{trib} = Tributary length of the structure subject to thermal variation

α = Coefficient of thermal expansion; 0.000006 in./in./°F for concrete and 0.0000065 in./in./°F for steel

δT Bridge superstructure average temperature range as a function of bridge type and location

In accordance with WSDOT *Standard Specifications*, contract drawings state dimensions at a normal temperature of 64°F unless specifically noted otherwise. Construction and fabrication activities at average temperatures other than 64°F require the Contractor or fabricator to adjust lengths of structural elements and concrete forms accordingly.

Some expansion joint devices are installed in pre-formed concrete blockouts some time after the completion of the bridge deck. The expansion joint device must be cast into its respective blockout with a gap setting corresponding to the ambient superstructure average temperature at the time the blockouts are filled with concrete. In order to accomplish this, expansion device gap settings must be specified on the contract drawings as a function of superstructure ambient average temperature. Generally, these settings are specified for temperatures of 40°F, 64°F, and 80°F.

9.1.3 Small Movement Range Joints

Elastomeric compression seals, poured sealants, asphaltic plugs, pre-formed closed cell foam, epoxy-bonded elastomeric glands, steel sliding plates, and bolt-down elastomeric panels have all been used in the past for accommodating small movement ranges. The current policy is to use compression seals and rapid-cure silicone sealants almost exclusively.

A. **Compression Seals** – Compression seals are continuous manufactured elastomeric elements, typically with extruded internal web systems, installed within an expansion joint gap to effectively seal the joint against water and debris infiltration. Compression seals are held in place by mobilizing friction against adjacent vertical joint faces. Design philosophy requires that they be sized and installed to always be in a state of compression.

   Compression seals can be installed against smooth vertical concrete faces or against steel armoring. When installed against concrete, special concrete nosing material having enhanced impact resistance is typically used. Polymer concrete, polyester concrete, and elastomeric concrete have been used with varying degrees of successful performance. Consult the Bearing and Expansion Joint Specialist for current policy.

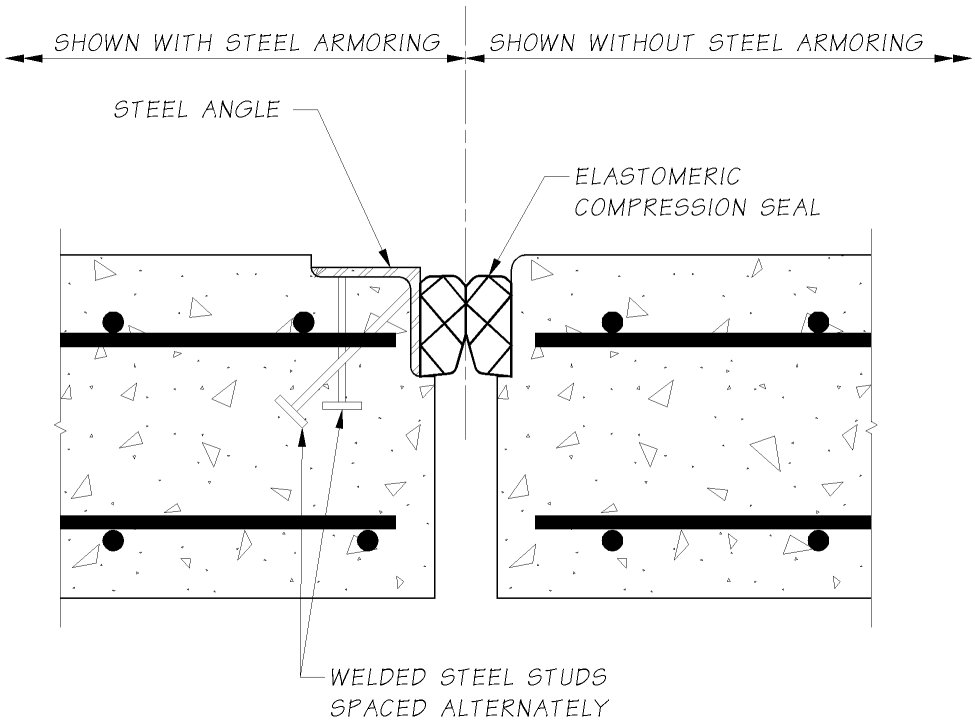

Compression Seal Joint
Figure 9.1.3-1

In design calculations, the minimum and maximum compressed widths of the seal are generally set at 40 percent and 85 percent of the uncompressed width. These measurements are perpendicular to the joint axis. It is generally assumed that the compressed seal width at the normal construction temperature of 64°F is 60 percent of its uncompressed width. For skewed joints, bridge deck movement must be separated into components perpendicular to and parallel to the joint axis. Shear displacement of the compression seal should be limited to a specified percentage of its uncompressed width, usually set at about 22 percent. Additionally, the expansion gap width should be set so that the compression seal can be replaced over a reasonably wide range of construction temperatures. Manufacturers' catalogues generally specify the minimum expansion gap widths into which specific size compression seals can be installed. The expansion gap width should be specified on the contract drawings as a function of the superstructure average temperature.

Compression seal movement design relationships can be expressed as:

$\Delta_{temp\text{-}normal} = \Delta_{temp} \cdot \cos\theta$ [thermal movement normal to joint]
$\Delta_{temp\text{-}parallel} = \Delta_{temp} \cdot \sin\theta$ [thermal movement parallel to joint]
$\Delta_{shrink\text{-}normal} = \Delta_{shrink} \cdot \cos\theta$ [shrinkage movement normal to joint]
$\Delta_{shrink\text{-}parallel} = \Delta_{shrink} \cdot \sin\theta$ [shrinkage movement parallel to joint]
$W_{min} = W_{install} - [(T_{max}\text{-}T_{install})/(T_{max}\text{-}T_{min})] \cdot \Delta_{temp\text{-}normal} > 0.40 \cdot W$
$W_{max} = W_{install} + [(T_{install}\text{-}T_{min})/(T_{max}\text{-}T_{min})] \cdot \Delta_{temp\text{-}normal} + \Delta_{shrink\text{-}normal} < 0.85 \cdot W$

Where:

θ = skew angle of the expansion joint, measured with respect to a line perpendicular to the bridge longitudinal axis

W = uncompressed width of the compression seal
$W_{install}$ = expansion gap width at installation
$T_{install}$ = superstructure temperature at installation
W_{min} = minimum expansion gap width
W_{max} = maximum expansion gap width
T_{min} = minimum superstructure average temperature
T_{max} = maximum superstructure average temperature

Algebraic manipulation yields:

$$W > (\Delta_{temp\text{-}normal} + \Delta_{shrink\text{-}normal})/0.45$$

$$W > (\Delta_{temp\text{-}parallel} + \Delta_{shrink\text{-}parallel})/0.22$$

Now, assuming $W_{install} = 0.6 \cdot W$,

$$W_{max} = 0.6 \cdot W + [(T_{install} - T_{min})/(T_{max} - T_{min})] \cdot \Delta_{temp\text{-}normal} + \Delta_{shrink\text{-}normal} < 0.85 \cdot W$$

Rearranging yields:

$$W > 4 \cdot [(T_{install} - T_{min})/(T_{max} - T_{min}) \cdot \Delta_{temp\text{-}normal} + \Delta_{shrink\text{-}normal}]$$

Design Example:

Given: A reinforced concrete box girder bridge has a total length of 200 ft. A compression seal expansion joint at each abutment will accommodate half of the total bridge movement. The abutments and expansion joints are skewed 15°. Bridge superstructure average temperatures are expected to range between 0°F and 100°F.

Find: Required compression seal size and construction gap widths at 40°F, 64°F, and 80°F.

Solution:

Step 1: Calculate temperature and shrinkage movement.

Temperature: $\Delta_{temp} = ½(.000006)(100°F)(200')(12''/') = 0.72''$
Shrinkage: $\Delta_{shrink} = ½(.0002)(0.8)(200')(12''/') = \underline{0.19''}$
Total deck movement at the joint: $= 0.91''$

$\Delta_{temp\text{-}normal} + \Delta_{shrink\text{-}normal} = (0.91'')(\cos 15°) = 0.88''$

$\Delta_{temp\text{-}parallel} + \Delta_{shrink\text{-}parallel} = (0.91'')(\sin 15°) = 0.24''$

Step 2: Determine compression seal width required.

$W > 0.88''/0.45 = 1.96''$

$W > 0.24''/0.22 = 1.07''$

$W > 4[(64°F - 0°F)/(100°F - 0°F) \cdot (0.72'') + 0.19''] (\cos 15°) = 2.51''$
$\rightarrow$Use a 3″ compression seal

Step 3: Evaluate construction gap widths for various temperatures for a 3 in. compression seal.

Construction width at 64°F = $0.6(3'') = 1.80''$

Construction width at 40°F = $1.80'' + [(64° - 40°)/(100° + 0°)]\cdot(0.72'')\cdot(\cos 15°) = 1.97''$

Construction width at 80°F = $1.80'' – [(80° - 64°)/(100° + 0°)]\cdot(0.72'')\cdot(\cos 15°) = 1.69''$

Conclusion: Use a 3 in. compression seal. Construction gap widths for installation at temperatures of 40°F, 64°F, and 80°F are 2 in., 1-13/16 in., and 1-11/16 in. respectively.

B. **Rapid-Cure Silicone Sealants –** Durable low-modulus poured sealants provide watertight expansion joint seals in both new construction and rehabilitation projects. Most silicone sealants possess good elastic performance over a wide range of temperatures while demonstrating high levels of resistance to ultraviolet and ozone degradation. Other desirable properties include self-leveling and self-bonding characteristics.

Rapid-cure silicone sealants are particularly good candidates for rehabilitation in situations where significant traffic disruption consequential to extended traffic lane closure is unacceptable. Additionally, unlike compression seals, rapid-cure silicone sealants do not require straight, parallel substrate surfaces in order to create a watertight seal.

Rapid-cure silicone sealants can be installed against either concrete or steel. It is extremely critical that concrete or steel substrates be thoroughly cleaned before the sealant is installed. Some manufacturers require application of specific primers onto substrate surfaces prior to sealant installation in order to enhance bonding. Consult the Bearing and Expansion Joint Specialist for specifics.

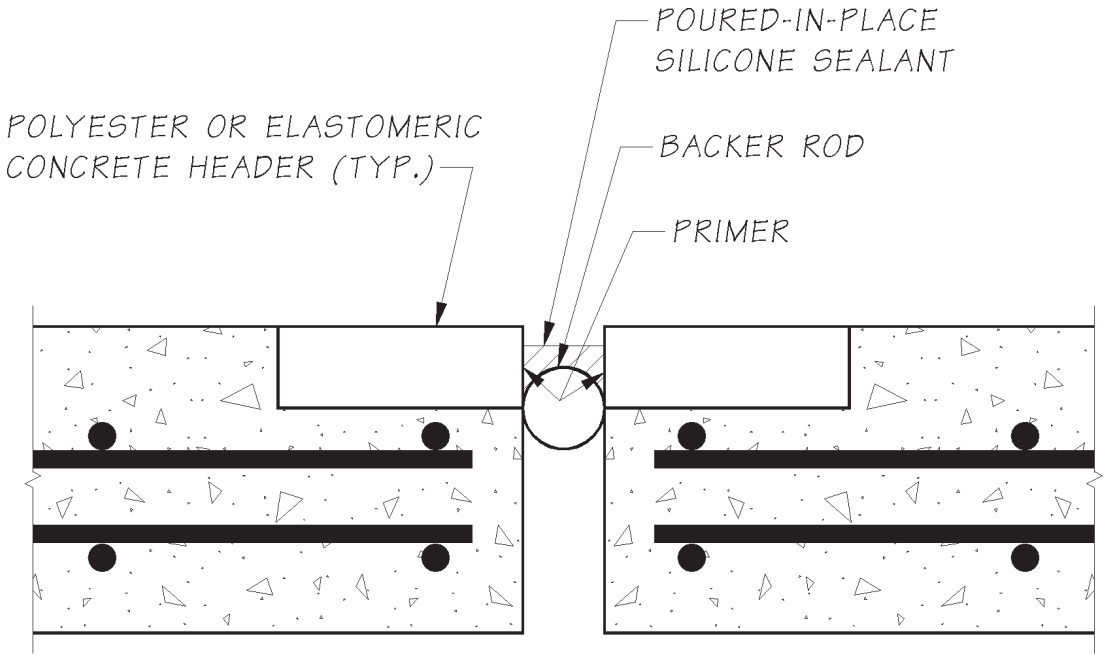

Rapid-cure Silicone Sealants Joint
Figure 9.1.3-2

Rapid-cure silicone sealants should be designed based upon the manufacturer's recommendations. Maximum and minimum working widths of the poured sealant joint are generally recommended as a percentage of the sealant width at installation. Depending upon the manufacturer, these joints can accommodate tensile movements of up to 100 percent and compressive movements of up to 50 percent of the sealant width at installation. A minimum recess is typically required between the top of the roadway surface and the top of the sealant surface. This recess is critical in assuring that tires will not contact the top surface of the sealant and initiate its debonding from substrate material.

Design Example:

Given: An existing 25-year-old 160 ft. long single span prestressed concrete girder bridge is scheduled for a concrete overlay. The existing compression seals at each non-skewed abutment are in poor condition, although the existing concrete edges on each side of each expansion joint are in relatively good condition. The expansion gaps at these abutments are 1in. wide at a normal temperature of 64°F. Assume that each expansion joint will accommodate half of the total bridge movement. Bridge superstructure average temperatures are expected to range between 0°F and 100°F.

Find: Determine the feasibility of reusing the existing 1 in. expansion gaps for a rapid cure silicone sealant system retrofit. Assume that the sealant will be installed at an average superstructure temperature between 40°F and 80°F. Manufacturer's recommendations state that Sealant A can accommodate 100 percent tension and 50 percent compression and that Sealant B can accommodate 50 percent tension and 50 percent compression.

Solution:

Step 1: Calculate future temperature, shrinkage, and creep movements.

Temperature: Δ_{temp} = ½ (.000006)(100°F)(160′)(12″/′) = 0.58″
Shrinkage: Δ_{shrink} = 0 (Essentially all shrinkage has already occurred.)
Creep: Δ_{creep} = 0 (Essentially all creep has already occurred.)

Step 2: Calculate existing expansion gap widths at average superstructure temperatures of 40°F and 80°F. These are estimated extreme sealant installation temperatures.

G_{40F} = 1.00″ + [(64°F – 4 0°F)/(100°F – 0°F)] · (.58″) = 1.14″
G_{80F} = 1.00″ – [(80°F – 64°F)/(100°F – 0°F)] · (.58″) = 0.91″

Step 3: Check sealant capacity if installed at 40°F.

Closing movement = [(100°F – 40°F)/(100°F – 0°F)](.58″) = 0.35″
0.35″/1.14″ = 0.31 < 0.50 Sealants A and B
Opening movement = [(40°F – 0°F)/(100°F – 0°F)](.58″) = 0.23″
0.23″/1.14″ = 0.20 < 1.00 Sealant A< 0.50 Sealant B

Step 4: Check sealant capacity if installed at 80° F.

Closing movement = = [(100°F – 80°F)/(100°F – 0°F)](.58″) = 0.12″
0.12″/0.91″ = 0.13 < 0.50 Sealants A and B
Opening movement = [(80°F – 0°F)/(100°F – 0°F)](.58″) = 0.46″
0.46″/0.91″ = 0.50 < 1.00 Sealant A
= 0.50 Sealant B

Conclusion: The existing 1 in. expansion gap is acceptable for installation of a rapid cure silicone sealant system. Note that Sealant B would reach its design opening limit at 0°F if it were installed at a superstructure average temperature of 80°F. Expansion gap widths at temperatures other than the normal temperature are generally not specified on rapid cure silicone sealant retrofit plans.

C. **Asphaltic Plug Joints –** Asphaltic plug joints consist of a flexible polymer modified asphalt installed in a preformed block out atop a steel plate and backer rod. In theory, asphaltic plug joints provided a seamless smooth riding surface. However, when subjected to high traffic counts, heavy trucks, or substantial acceleration/deceleration traction, the polymer modified asphalt tends to creep, migrating out of the block outs. As a consequence, we no longer specify the use of asphaltic plug joints.

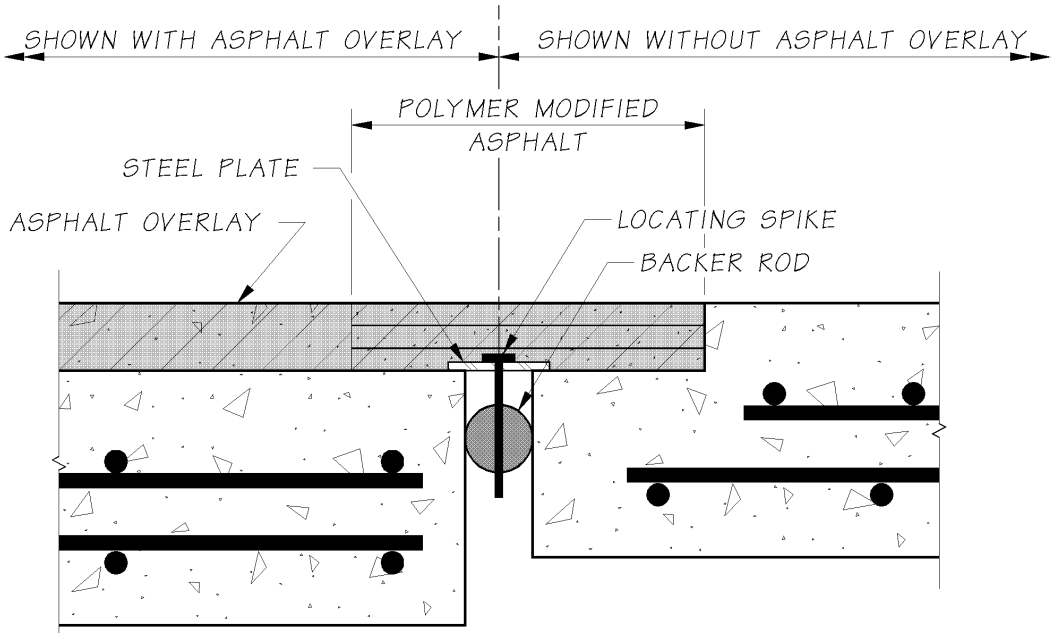

Asphaltic Plug Joint
Figure 9.1.3-3

D. **Headers –** Expansion joint headers for new construction are generally the same Class 4000D structural concrete as used for the bridge deck and cast integrally with the deck.

Expansion joint headers installed as part of a rehabilitative and/or overlay project are constructed differently.

Being a flexible material, hot mix asphalt (HMA) cannot provide rigid lateral support to an elastomeric compression seal or a rapid cure silicone sealant bead. Therefore, rigid concrete headers must be constructed on each side of such an expansion joint when an HMA overlay is installed atop an existing concrete deck. These headers provide a rigid lateral support to the expansion joint device and serve as a transition between the HMA overlay material and the expansion joint itself.

WSDOT allows either polyester concrete or elastomeric concrete for expansion joint headers. These two materials, which provide enhanced durability to impact in regard to other concrete mixes, shall be specified as alternates in the contract documents. Bridge Special Provisions (BSP)02206.GB6 and BSP023006.GB6 specify the material and construction requirements for polyester concrete. Bridge Special Provisions BSP02207.GB6 and BSP023007.GB6 specify the material and construction requirements for elastomeric concrete.

Modified concrete overlay (MCO) material can provide rigid side support for an elastomeric compression seal or a rapid cure silicone sealant bead without the need for separately constructed elastomeric concrete or polyester concrete headers. This alternative approach requires the approval of the Bearing and Expansion Joint Specialist. Such modified concrete overlay headers may utilize welded wire fabric as reinforcement. Contract 7108 which includes Bridges No. 90/565N&S and 90/566N&S is an example. BSP02313410.GB6 specifies the construction requirements for this approach, including the requirement for a temporary form to keep the joint open during placement of the MCO.

9.1.4 Medium Movement Range Joints

A. **Steel Sliding Plate Joints –** Two overlapping steel plates, one attached to the superstructure on each side of the joint, can be used to provide a smooth riding surface across an expansion joint. Unfortunately, steel sliding plates do not generally provide an effective barrier against intrusion of water and deicing chemicals into the joint and onto substructure elements. Consequently, these joints have been supplanted by newer systems, such as strip seals, with improved resistance to water penetration.

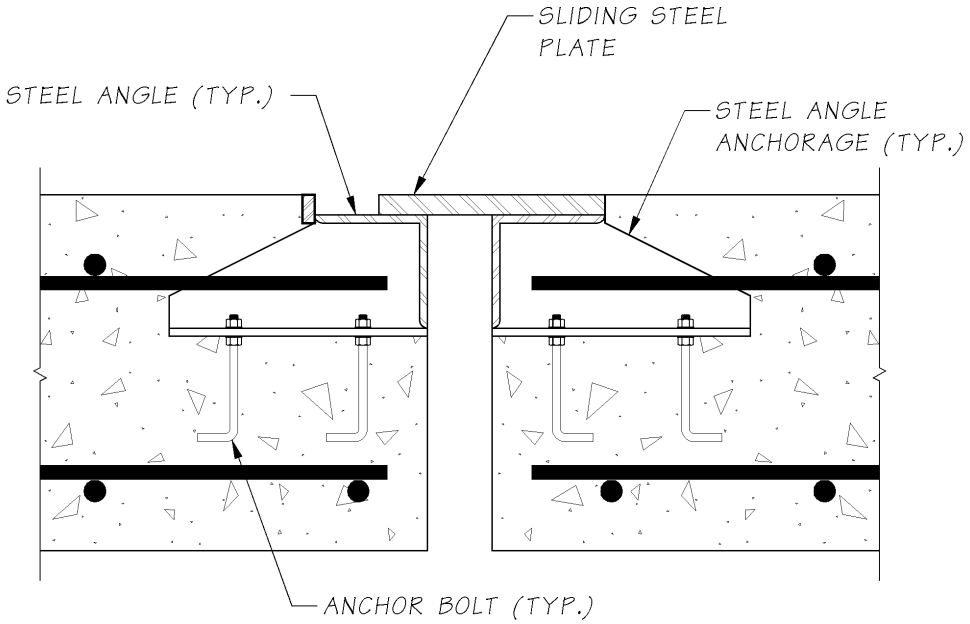

Steel Sliding Plate Joint
Figure 9.1.4-1

Before the advent of more modern systems, steel sliding plates were specified extensively. Their limited use today includes the following specific applications: 1) high pedestrian use sidewalks, 2) modular expansion joint upturns at traffic barriers, and 3) roadway applications involving unusual movements (translation and large rotations) not readily accommodated by modular expansion joints. In these applications, the sliding plates are generally galvanized or painted to provide corrosion resistance.

Repeated impact and corrosion have deteriorated many existing roadway sliding steel plate systems. In many instances, the anchorages connecting the sliding plate to the concrete deck have broken. When the integrity of the anchorages has been compromised, the steel sliding plates must generally be removed in their entirety and replaced with a new, watertight system. Where the integrity of the anchorages has not been compromised, sliding plates can often be retrofitted with poured sealants or elastomeric strip seals.

B. **Strip Seal Joints –** An elastomeric strip seal system consists of a preformed elastomeric gland mechanically locked into metallic edge rails generally embedded into the concrete deck on each side of an expansion joint gap. Unfolding of the elastomeric gland accommodates movement. Steel studs are generally welded to the steel extrusions constituting the edge rails to facilitate anchorage to the concrete deck. Damaged or worn glands can be replaced with minimal traffic disruption.

The metal edge rails effectively armor the edges of the expansion joint, obviating the need for a special impact resistant concrete, usually required at compression seal and poured sealant joints. The designer must select either the standard or special anchorage. The special anchorage incorporates steel reinforcement bar loops welded to intermittent steel plates, which in turn are welded to the extrusion. The special anchorage is generally used for very high traffic volumes or in applications subject to snowplow hits. In applications subject to snowplow hits and concomitant damage, the intermittent steel plates can be detailed to protrude slightly above the roadway surface in order to launch the snowplow blade and prevent it from catching on the forward extrusion.

The special anchorage requires a 9 in. deep block out, as opposed to 7 in. deep for the standard anchorage. The standard anchorage is acceptable for high traffic volume expansion joint replacement projects where block out depth limitations exist.

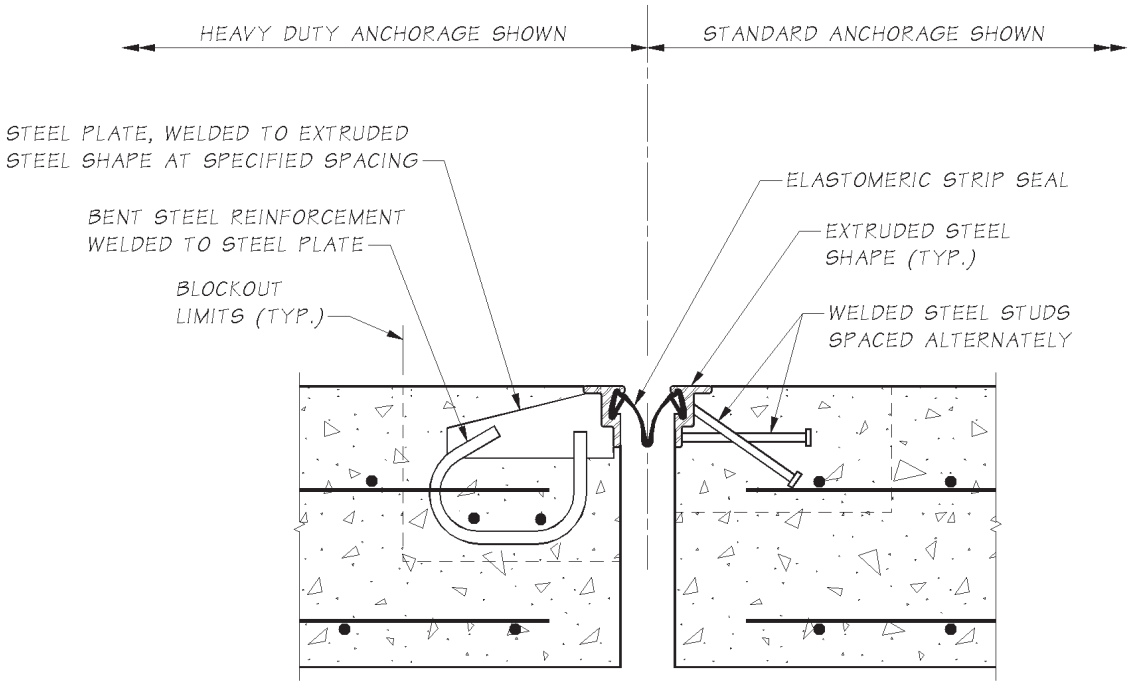

Strip Seal Joint
Figure 9.1.4-2

Design Example:

Given: A steel plate girder bridge has a total length of 600 ft. It is symmetrical and has a strip seal expansion joint at each end. These expansion joints are skewed 10°. Interior piers provide negligible restraint against longitudinal translation. Bridge superstructure average temperatures are expected to range between –30°F and 120°F during the life of the bridge. Assume a normal installation temperature of 64°F.

Find: Required Type A and Type B strip seal sizes and construction gap widths at 40°F, 64°F, and 80°F. Type A strip seals have a ½ in. gap at full closure. Type B strip seals are able to fully close, leaving no gap.

Solution:

Step 1: Calculate temperature and shrinkage movement.

Temperature: Δ_{temp} = ½(.0000065)(150°F)(600′)(12″/′) = 3.51″

Shrinkage: Δ_{shrink} = 0.0 (no shrinkage; μ = 0.0 for steel bridge)

Total deck movement at each joint: = 3.51″

$\Delta_{temp\text{-}normal\text{-}closing}$ = (120°F – 64°F)/(120°F + 30°F)(3.51″)(cos 10°)
= 1.29″

$\Delta_{temp\text{-}normal\text{-}opening}$ = (64°F + 30°F)/(120°F + 30°F)(3.51″)(cos 10°)
= 2.17″

Step 2: Determine strip seal size required. Assume a minimum construction gap width of 1½″ at 64°F.

Type A: Construction gap width of 1½″ at 64°F will not accommodate 1.29″ closing with a ½″ gap at full closure. Therefore, minimum construction gap width at 64°F must be 1.29″ + 0.50″ = 1.79″

Size required = 1.79″ + 2.17″ = 3.96″ →Use 4″ strip seal

Type B: Construction width of 1½″ at 64°F is adequate.

Size required = 1.50″ + 2.17″ = 3.67″ →Use 4″ strip seal

Step 3: Evaluate construction gap widths for various temperatures for a 4″ strip seal.

Type A: Required construction gap width at 64°F = 0.50″ + 1.29″ = 1.79″

Construction gap width at
40° F = 1.79″ + (64°F - 40°F)/(64°F + 30°F)·(2.17″) = 2.34″

Construction gap width at
80°F = 1.79″ – (80°F – 64°F)/(120°F – 64°F)·(1.29″)=1.42″

Type B: Construction gap width of 1½″ at 64°F is adequate.

Construction gap width at
40°F = 1.50″ + (64°F - 40°F)/(64°F + 30°F)·(2.17″) = 2.05″

Construction gap width at
80°F = 1.50″ – (80°F – 64°F)/(120°F – 64°F)·(1.29″) = 1.13″

Conclusion: Use a 4 in. strip seal. Construction gap widths for installation at superstructure average temperatures of 40° F, 64° F, and 80° F are 2-5/16″, 1-13/16″, and 1-7/16″ for Type A and 2-1/16″, 1½″, and 1⅛″ for Type B. (Note that slightly larger gap settings could be specified for the 4″ Type B strip seal in order to permit the elastomeric glands to be replaced at lower temperatures at the expense of ride smoothness across the joint.)

C. **Bolt-down Panel Joints –** Bolt-down panel joints, sometimes referred to as expansion dams, are preformed elastomeric panels internally reinforced with steel plates. Bridging across expansion gaps, these panels are bolted into formed block outs in the concrete deck with either adhesive or expansive anchors. Expansion is accompanied by stress and strain across the width of the bolt-down panel between anchor bolts.

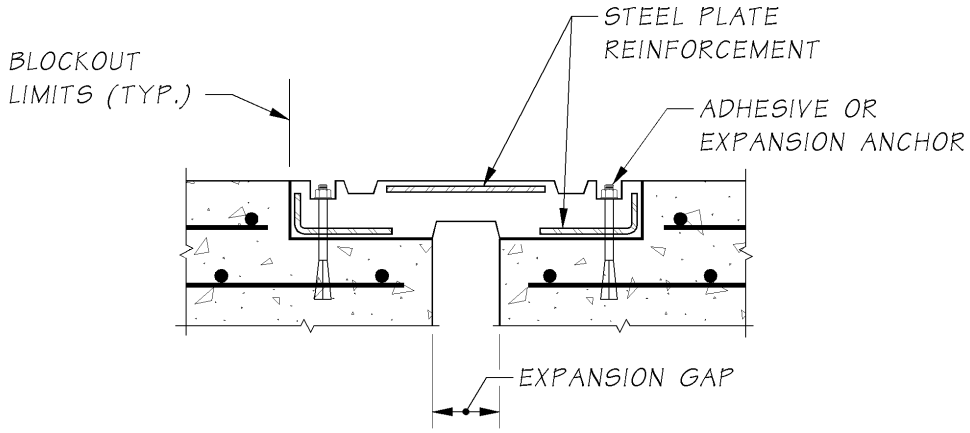

Bolt-down Panel Joint
Figure 9.1.4-3

Because of durability concerns, we no longer specify bolt-down panel joints. On bridge overlay and expansion joint rehabilitation projects, bolt-down panels are being replaced with rapid-cure silicone sealant joints or strip seal joints. For rehabilitation of bridges having low speed or low volume traffic, existing bolt-down panel joints may be retained and/or selective damaged panels replaced.

9.1.5 Large Movement Range Joints

A **Steel Finger Joints –** Finger joints have been successfully used to accommodate medium and large movement ranges. They are generally fabricated from steel plate and are installed in cantilevered configurations. The steel fingers must be designed to support traffic loads with sufficient stiffness to preclude excessive vibration. In addition to longitudinal movement, finger joints must also accommodate any rotations or differential vertical deflection across the joint. Finger joints may be fabricated with a slight downward taper toward the ends of the fingers in order to minimize potential for snowplow blade damage. Unfortunately, finger joints do not provide an effective seal against water infiltration. Elastomeric and metal troughs have been installed beneath steel finger joints to catch and redirect runoff water. However, in the absence of routine maintenance, these troughs clog and become ineffective.

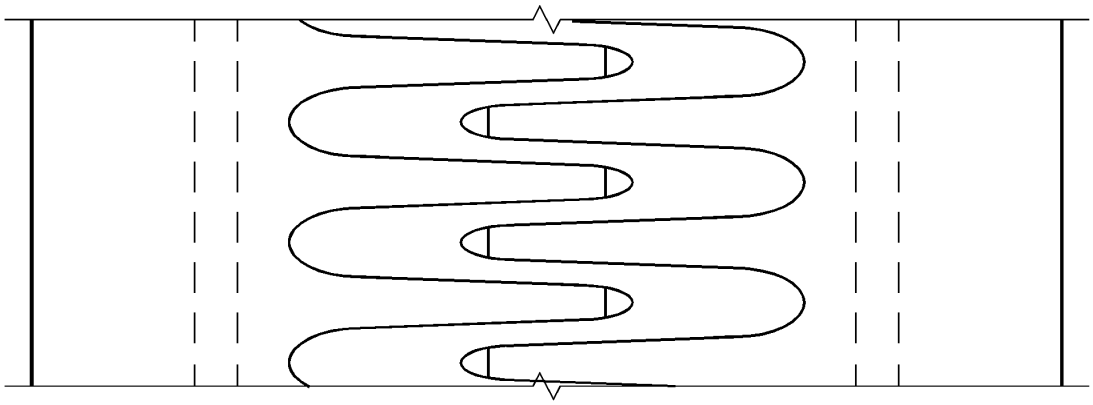

Steel Finger Joint
Figure 9.1.5-1

B. **Modular Expansion Joints –** Modular expansion joints are complex structural assemblies designed to provide watertight wheel load transfer across expansion joint openings. These systems were developed in Europe and introduced into the U.S. in the 1960s. To date, modular expansion joints have been designed and fabricated to accommodate movements of up to 85 in. In Washington state, the largest modular expansion joints are those on the new Tacoma Narrows Bridge. These joints accommodate 48 in. of service movement and 60 in. of seismic movement. Modular expansion joints are generally shipped in a completely assembled configuration. Although center beam field splices are not preferable, smaller motion range modular expansion joints longer than 40 ft. may be shipped in segments to accommodate construction staging and/or shipping constraints.

1. **Operational Characteristics –** Modular expansion joints comprise a series of steel center beams oriented parallel to the expansion joint axis. Elastomeric strip seals or box-type seals attach to adjacent center beams, preventing infiltration of water and debris. The center beams are supported on support bars, which span in the primary direction of anticipated movement. The support bars are supported on sliding bearings mounted within support boxes. Polytetrafluoroethylene (PTFE) - stainless steel interfaces between elastomeric support bearings and support bars facilitate the unimpeded translation of the support bars as the expansion gap opens and closes. The support boxes generally rest on either cast-in-place concrete or grout pads installed into a preformed block out.

   Modular expansion joints can be classified as either single support bar systems or multiple support bar systems. In multiple support bar systems, a separate support bar supports each center beam. In the more complex single support bar system, one support bar supports all center beams at each support location. This design concept requires that each center beam be free to translate along the longitudinal axis of the support bar as the expansion gap varies. This is accomplished by attaching steel yokes to the underside of the center beams. The yoke engages the support bar to facilitate load transfer. Precompressed elastomeric springs and PTFE – stainless steel interfaces between the underside of each center beam and the top of the support bar and between the bottom of the support bar and bottom of the yoke support each center beam and allow it to translate along the longitudinal axis of the support bar. Practical center beam span lengths limit the use of multiple support bar systems for larger movement range modular expansion joints. Multiple support bar systems typically become impractical for more than nine seals or for movement ranges exceeding 27″. Hence, the single support bar concept typifies these larger movement range modular expansion joints.

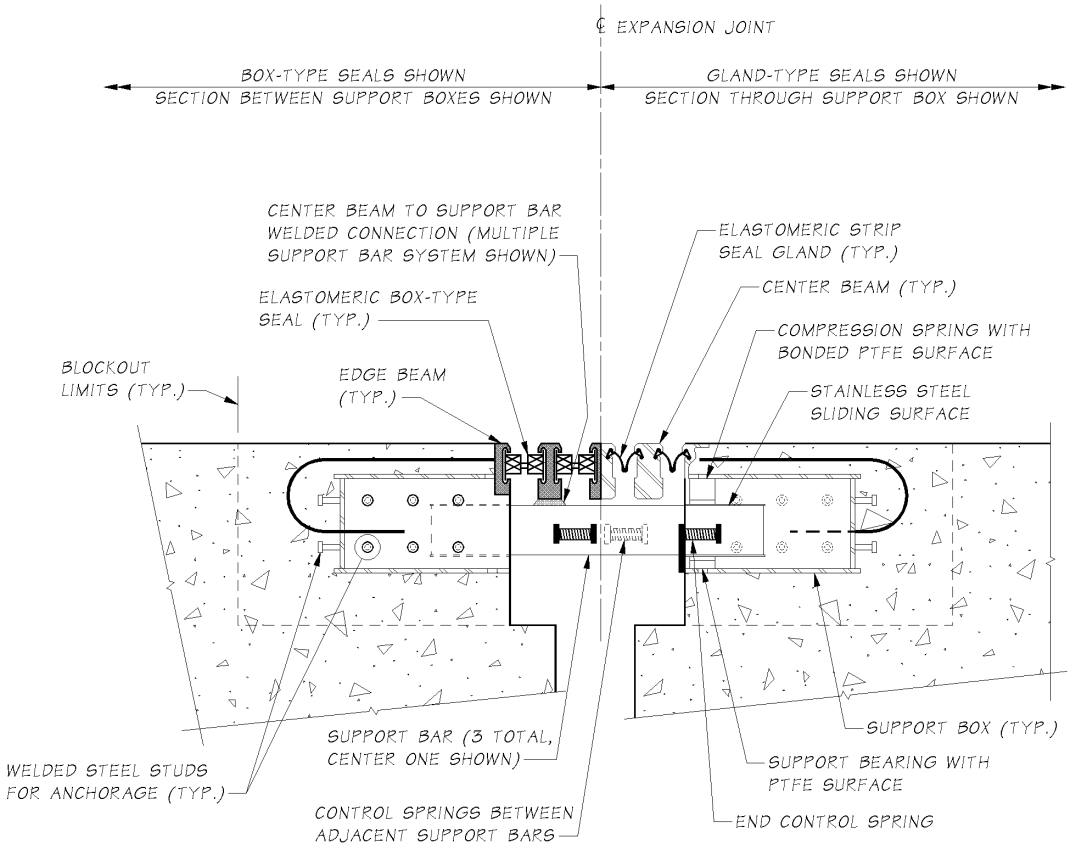

Modular Expansion Joint
Figure 9.1.5-2

The highly repetitive nature of axle loads predisposes modular expansion joint components and connections to fatigue susceptibility, particularly at center beam to support bar connections and center beam field splices. Bolted connections of center beams to support bar have demonstrated poor fatigue endurance. Welded connections are preferred, but must be carefully designed, fatigue tested, fabricated, and inspected to assure satisfactory fatigue resistance. WSDOT'S current special provision for modular expansion joints requires stringent fatigue based design criteria for modular expansion joints. This special provision also specifies criteria for manufacturing, shipping, storing, and installing modular expansion joints.

Modular expansion joints may need to be shipped and/or installed in two or more pieces and subsequently spliced together in order to accommodate project staging and/or practical shipping constraints. Splicing generally occurs after concrete is cast into the block outs. The center beams are the elements that must be connected. These field connections are either welded, bolted, or a hybrid combination of both.

Center beam field splices have historically been the weak link of modular expansion joints because of their high fatigue susceptibility and their tendency to initiate progressive zipper-type failure. The reduced level of quality control achievable with a field operation in regard to a shop operation contributes to this susceptibility. Specific recommendations regarding center beam field splices will be subsequently discussed as they relate to shop drawing review and construction.

2. **Movement Design –** Calculated total movement range establishes modular expansion joint size. WSDOT policy has been to provide a 15 percent factor of safety on these calculated service movements. Current systems permit approximately 3 in. of movement per elastomeric seal element; hence total movement rating provided will be a multiple of 3 in. To minimize impact and wear on bearing elements, the maximum gap between adjacent center beams should be limited to about 3½ in

   To facilitate the installation of the modular joints at temperatures other than the 64°F normal temperature, the contract drawings shall specify expansion gap distance face-to-face of edge beams as a function of the superstructure temperature at the time of installation.

   Modular expansion joint movement design relationships can be expressed as:

   $$n = MR / mr$$
   $$G_{min} = (n - 1) \cdot w + n \cdot g$$
   $$G_{max} = G_{min} + M7R$$

   Where MR = total movement range of the modular joint

   mr = movement range per elastomeric seal
   n = number of seals
   $n - 1$ = number of center beams
   w = width of each center beam
   g = minimum gap per strip seal element at full closure
   G_{min} = minimum distance face-to-face of edge beams
   G_{max} = maximum distance face-to-face of edge beams

   Design Example:

   Given: Two cast-in-place post-tensioned concrete box girder bridge frames meet at an intermediate pier where they are free to translate longitudinally. Skew angle is 0° and the bridge superstructure average temperature ranges from 0°F to 120°F. A modular bridge expansion joint will be installed 60 days after post-tensioning operations have been completed. Specified creep is 150 percent of elastic shortening. Assume that 50 percent of total shrinkage has already occurred at installation time. The following longitudinal movements were calculated for each of the two frames:

	Frame A	Frame B
Shrinkage	1.18″	0.59″
Elastic shortening	1.42″	0.79″
Creep (1.5 × Elastic shortening)	2.13″	1.18″
Temperature fall (64°F to 0°F)	3.00″	1.50″
Temperature rise (64°F to 120°F)	2.60″	1.30″

   Find: Modular expansion joint size required to accommodate the total calculated movements and the installation gaps measured face-to-face of edge beams at superstructure average temperatures of 40°F, 64°F, and 80°F.

   Solution:

   Step 1: Determine modular joint size.

   Total opening movement (Frame A) = (0.5)·(1.18″) + 2.13″ + 3.00″
   = 5.72″

   Total opening movement (Frame B) = (0.5)·(0.59″) + 1.18″ + 1.50″
   = 2.98″

Total opening movement (both frames) = 5.72″ + 2.98″ = 8.70″

Total closing movement (both frames) = 2.60″ + 1.30″ = 3.90″

Determine size of the modular joint, including a 15 percent allowance:

1.15·(8.70″ + 3.90″) = 14.49″ →Use a 15 in. movement rating joint

Step 2: Evaluate installation gaps measured face-to-face of edge beams at superstructure average temperatures of 40°F, 64°F, and 80°F.

MR = 15″ (movement range)
mr = 3″ (maximum movement rating per strip seal element)
n = 15″/3″ = 5 strip seal elements
$n - 1$ = 4 center beams
w = 2.50″ (center beam top flange width)
g = 0″
G_{min} = 4·(2.50″) + 4·(0″) = 10″
G_{max} = 10″ + 15″ = 25″
G_{64F} = G_{min} + Total closing movement from temperature rise
= 10″ + 1.15·(3.90″) = 14.48″ →Use 14½″
G_{40F} = 14.5″ + [(64°F – 40°F)/(64°F – 0°F)]·(3.00″ + 1.50″) = 16.19″
G_{80F} = 14.5″ – [(80°F – 64°F)/(120°F – 64°F)]·(2.60″ + 1.30″) = 13.39″

Check spacing between center beams at minimum temperature:

G_{0F} = 14.50″ + 8.70″ = 23.20″

Spacing = [23.20″ – 4(2.50″)]/5 = 2.64″ < 3½″ →OK

Check spacing between center beams at 64° F for seal replacement:

Spacing = [14.50″ – 4(2.50″)]/5 = 0.90″ < 1.50″ Therefore, the center beams must be mechanically separated in order to replace strip seal elements.

Conclusion: Use a 15 in. modular expansion joint. The gaps measured face-to-face of edge beams at installation temperatures of 40°F, 64°F, and 80°F are 16-3/16 in, 14½ in and 13⅜ in, respectively.

3. **Review of Shop Drawings and Structural Design Calculations –** The manufacturer's engineer generally performs structural design of modular expansion joints. The project special provisions requires that the manufacturer submit structural calculations, detailed fabrication drawings, and applicable fatigue tests for approval by the Engineer. All structural elements must be designed and detailed for both strength and fatigue. Additionally, modular expansion joints should be detailed to provide access for inspection and periodic maintenance activities, including replacement of seals, control springs, and bearing components.

   WSDOT's special provision for modular expansion joints delineates explicit requirements for their design, fabrication, and installation. This comprehensive special provision builds upon WSDOT's past experience specifying modular expansion joints and incorporates the NCHRP Report 402 *Fatigue Design of Modular Bridge Expansion Joints*. The special provisions include requirements for the shop drawings, calculations, material certifications, general fabrication methods, corrosion protection, shipping and handling, storage, installation, fatigue testing, applicable welding codes and certifications, quality control, and quality assurance. It is strongly advised to carefully review this special provision before reviewing modular expansion joint shop drawings and calculations.

Any structural details, including connections, that do not clearly correspond to specific fatigue categories depicted in the LRFD shall be fatigue tested in accordance with the requirements stipulated in the special provision. Documentation of these tests shall accompany the shop drawing submittal.

As stated in the special provisions, the Contractor shall submit documentation of a quality assurance program distinctly separate from in-house quality control. Quality assurance shall be performed by an independent agency and shall be provided by the manufacturer.

Weld procedures shall be submitted for all shop and field welds. These procedures stipulate welding process employed, end preparation of the component welded, weld metal type, preheat temperature, and welder certifications. It is critical that all welds be made in strict accordance with specifications and under very careful inspection.

Field splices of center beams require particularly careful review. WSDOT's special provision recommends several mitigating measures to minimize fatigue susceptibility of center beam field splices. These measures include reducing support box spacing and optimizing fatigue stress range at field splice locations. Keep in mind that the confined nature of the space in which a welder must work can make these welds very difficult to complete. The American Welding Society (AWS) Welding Code prequalifies certain end geometries because experience has shown that high quality welds can be achieved.

Non-prequalified center beam end geometries require the Contractor to submit a Procedure Qualification Record documenting that satisfactory weld quality has been achieved using samples before welding of the actual field piece. The Contractor will generally want to avoid the additional expense associated with these tests and will thus specify a prequalified end geometry.

WSDOT's special provisions require that adequate concrete consolidation be achieved underneath all support boxes. The reviewer should ascertain that the shop drawings detail a vertical minimum of 2 in. between the bottom of each support box and the top of the concrete block out. Alternatively, when vertical clearance is minimal, grout pads can be cast underneath support boxes before casting the concrete within the blockout.

4. **Construction Considerations –** Temperature adjustment devices are temporarily welded to the modular expansion joints to permit the Contractor to adjust the modular joint width so that it is consistent with the superstructure temperature at the time concrete is placed in the block out. The temperature devices effectively immobilize the modular joint. Once the concrete begins to set up, it is critical to remove these devices as soon as possible. If the modular expansion joint is prevented from opening and closing, it will be subject to very large, potentially damaging, forces.

   Prior to placement of concrete into the block out, temporary supports generally bridge across the expansion gap, suspending the modular expansion joint from the bridge deck surface. Following concrete placement, the modular joint is supported by bearing of the support boxes on concrete that has consolidated underneath the blockout. The inspector should assure that adequate concrete consolidation is achieved underneath and around the support boxes.

   Following delivery of the modular expansion joint to the jobsite and prior to its installation, the inspector should ascertain that center beam end geometries at field weld splice locations match those shown on the approved weld procedure.

9.2 Bearings

9.2.1 General Considerations

Bridge bearings facilitate the transfer of vehicular and other environmentally imposed loads from the superstructure down to the substructure, and ultimately, to the ground. In fulfilling this function, bearings must accommodate anticipated movements (thermal expansion/contraction) while also restraining undesired movements (seismic displacements). Because the movements allowed by an adjacent expansion joint must be compatible with the movement restriction imposed by a bearing, bearings and expansion joints must be designed interdependently and in conjunction with the anticipated behavior of the overall structure.

Numerous types of bearings are used for bridges. These include steel reinforced elastomeric bearings, fabric pad sliding bearings, steel pin bearings, rocker bearings, roller bearings, steel pin bearings, pot bearings, spherical bearings, disk bearings, and seismic isolation bearings. Each of these bearings possess different characteristics in regard to vertical and horizontal load carrying capacity, vertical stiffness, horizontal stiffness, and rotational stiffness. A thorough understanding of these characteristics is essential for economical bearing selection and design. Spherical bearings, disk bearings, and pot bearings are sometimes collectively referred to as high load multi-rotational (HLMR) bearings.

9.2.2 Force Considerations

Bridge bearings must be explicitly designed to transfer all anticipated loads from the superstructure to the substructure. These forces may be directed vertically, longitudinally, or transversely with respect to the global orientation of the bridge. In accordance with LRFD provisions, most bearing design calculations are based upon service limit state stresses. Impact need not be applied to live load forces in the design of bearings.

Experience has empirically led to the following practical load capacity approximations for various bearing types:

Bearing Type	Approx. Load Capacity
Steel reinforced elastomeric (Method B)	Less than 800 kips
Fabric pad	Less than 600 kips
Steel pin	More than 600 kips
Spherical and disk	More than 800 kips
Seismic isolation	Less than 800 kips

9.2.3 Movement Considerations

Bridge bearings can be detailed to provide translational fixity, to permit free translation in any horizontal direction, or to permit guided translation. The movement restrictions thus imposed by a bearing must be compatible with the movements allowed by an adjacent expansion joint. Additionally, both bearings and expansion joints must be designed consistent with the anticipated load and deformation behavior of the overall structure. Design rotations shall be calculated as follows:

A. **Elastomeric and Fabric Pad Bearings –** The maximum service limit state rotation for bearings that do not have the potential to achieve hard contact between metal components shall be taken as the sum of unfactored dead and live load rotations plus an allowance for fabrication and construction uncertainties of 0.005 radians.

B. **HLMR Bearings –** The maximum strength limit state load rotation for bearings that are subject to potential hard contact between metal components shall be taken as the sum of all applicable factored load rotations plus an allowance of 0.01 radians for fabrication and installation tolerances and an allowance of 0.01 radians for other uncertainties. Such bearings include spherical, pot, steel pin, and some types of seismic isolation bearings.

9.2.4 Detailing Considerations

HLMR bearings shall be designed, detailed, fabricated, and installed to facilitate inspection, maintenance, and eventual replacement. Jacking points shall be identified in the contract drawings so that bearings can be reset, repaired, or replaced. In some instances, bearings may need to be reset in order to mitigate unintended displacements induced by construction sequences.

Prestressed concrete girder bridges having end Type A (semi - integral) need not be detailed to accommodate elastomeric bearing replacement at abutments. Prestressed concrete girder bridges having end Type B (L-type abutments) shall be designed and detailed to accommodate elastomeric bearing replacement at abutments. Specifically, girder stops and end diaphragms shall be detailed to accommodate the placement of hydraulic jacks. The standard end diaphragms for long-span girders may not have sufficient flexural and shear capacity to support jacking induced stresses. The designer shall check these and provide sufficient steel reinforcement to accommodate shear forces and bending moments induced by jacking. (Girder end Types A and B are depicted on Figures 5.6.2-4 and 5.6.2-5.) Incidentally, intermediate piers of prestressed concrete girder bridges having steel reinforced elastomeric bearings shall also be designed and detailed to facilitate bearing replacement.

9.2.5 Bearing Types

A. **Elastomeric Bearings –** Elastomeric bearings are perhaps the simplest and most economical of all bridge bearings. They are broadly classified into four types: plain elastomeric pads, fiberglass reinforced elastomeric pads, steel reinforced elastomeric pads, and cotton duck reinforced elastomeric pads. Of these four types, the latter two are used extensively for bridge construction. Incidentally, cotton duck reinforced elastomeric pads are generally referred to as fabric pad bearings. This subsection will address steel reinforced elastomeric bearings. A subsequent section will address fabric pad bearings.

   A steel reinforced elastomeric bearing consists of discrete steel shims vulcanized between adjacent discrete layers of elastomer. The vulcanization process occurs in an autoclave under conditions of high temperature and pressure. The constituent elastomer is either natural rubber or synthetic rubber (neoprene). Steel reinforced elastomeric bearings are commonly used with prestressed concrete girder bridges and may be used with other bridge types. Because of their relative simplicity and fabrication ease, steel reinforced elastomeric bearings offer significant economy relative to HLMR bearings.

   Steel reinforced elastomeric bearings rely upon the inherent shear flexibility of the elastomer layers to accommodate bridge movements in any horizontal direction. This shear flexibility also enhances their rotational flexibility. The steel shims limit the tendency for the elastomer layers to bulge laterally under compressive load.

   Steel reinforced elastomeric bearings can be designed by either the Method A or Method B procedure delineated in the LRFD provisions. Current WSDOT policy is to design all elastomeric bearings using the Method B provisions, which provides more relief in meeting rotational demands than Method A. The Method A design procedure is a carryover based upon more conservative interpretation of past theoretical analyses and empirical observations prior to research leading up to the publication of *NCHRP Report 596 Rotation Limits for Elastomeric Bearings.*

   Both Method A and Method B design procedures require determination of the optimal geometric parameters to achieve an appropriate balance of compressive, shear, and rotational stiffnesses and capacities. Fatigue susceptibility is controlled by limiting live load compressive stress. Delamination (of steel shim-elastomer interface) susceptibility is controlled by limiting total compressive stress. Assuring adequate shim thickness precludes yield and rupture of the steel shims. Excessive shear deformation is controlled and rotational flexibility is assured by providing adequate total elastomer height. Generally, total elastomer thickness shall be no less than twice the maximum anticipated lateral deformation. Overall bearing stability is controlled by limiting total bearing height relative to its plan dimensions. The most important design parameter for reinforced elastomeric bearings is

the shape factor. The shape factor is defined as the plan area of the bearing divided by the area of the perimeter free to bulge (perimeter multiplied by thickness of one layer of elastomer).

Axial, rotational, and shear loading generate shear strain in the constituent elastomeric layers of a typical bearing. Computationally, Method B imposes a limit on the sum of these shear strains. It distinguishes between static and cyclic components of shear strain by applying an amplification factor of 1.75 to cyclic components to reflect cumulative degradation caused by repetitive loading.

In essence, elastomeric bearing design reduces to checking several mathematical equations while varying bearing plan dimensions, number of elastomeric layers and their corresponding thicknesses, and steel shim thicknesses. Because these calculations can become rather tedious, MS Excel spreadsheets have been developed and are available for designs using both Method A and Method B procedures. See the Bearing and Expansion Joint Specialist for these design tools.

LRFD design may result in thicker steel reinforced elastomeric bearings than previous designs, particularly for shorter span bridges. This is a consequence of the increased rotational flexibility required to accommodate the 0.005 radian allowance for uncertainties and partially to inherent conservatism built into the rotational capacity equations.

Although constituent elastomer has historically been specified by durometer hardness, shear modulus is the most important physical property of the elastomer for purposes of bearing design. Research has concluded that shear modulus may vary significantly among compounds of the same hardness. Accordingly, shear modulus shall be specified on the plans as 165 psi at 73ºF without reference to durometer hardness.

Elastomeric bearings shall conform to the requirements of AASHTO Specification M 251 *Plain and Laminated Elastomeric Bridge Bearings*. Shims shall be fabricated from ASTM A 1011 Grade 36 steel unless noted otherwise on the plans. Bearings shall be laminated in ½ inch thick elastomeric layers with a minimum total thickness of 1 inch. For overall bearing heights less than 5 inches, a minimum of ¼ inch of side clearance shall be provided over the steel shims. For overall heights greater than 5 inches, a minimum of ½ inch of side clearance shall be provided. Live load compressive deflection shall be limited to 1/16 inch. AASHTO Specification M 251 requires elastomeric bearings to be subjected to a series of tests, including a compression test at 150 percent of the total service load. For this reason, compressive dead load and live load shall be specified on the plans.

With respect to width, elastomeric bearings shall be designed and detailed as follows:

1. For prestressed concrete wide flange girders (WF42G, WF50G, WF58G, WF74G, and W95G), the edge of the bearing pad shall be set between 1 in. minimum and 9 in. maximum inside of the edge of the girder bottom flange.
2. For prestressed concrete I-girders, bulb-tee girders, and deck bulb-tee girders, the edge of the bearing pad shall be set 1 in. in side of the edge of the girder bottom flange.
3. For all prestressed concrete tub girders, the edge of the bearing shall be set 1in. inside of the edge of the bottom slab. Bearing pads for prestressed concrete tub girders shall be centered close to the centerline of each web.
4. For all prestressed concrete slabs, the edge of the bearing shall be set 1 in. inside of the edge of the slab. Two bearing pads and corresponding grout pads are required for each end of the prestressed concrete slabs. The need for steel shims shall be assessed during the bearing design.

As mentioned earlier, LRFD Article 14.4.2.1 requires that a 0.005 radian allowance for uncertainties be included in the design of steel reinforced elastomeric bearings. This allowance applies to both rotations θ_x and θ_y. The Article 14.4.2 Commentary somewhat ambiguously states "An owner may reduce the fabrication and setting tolerance allowances if justified by a suitable quality control plan; therefore, these tolerance limits are stated as recommendations rather than absolute limits." Consult

with the Bearings and Expansion Joint Specialist in instances in which the 0.005 radian tolerance precludes convergence to a reasonable design solution.

In order to facilitate compressive load testing, future bearing replacement, and vertical geometry coordination, the following table shall be included in the Plans:

Bearing Design Table	
Service I Limit State	
Dead load reaction	--------- kips
Live load reaction (w/o impact)	--------- kips
Unloaded height	--------- inches
Loaded height (*DL*)	--------- inches
Shear modulus at 73º F	--------- psi

In the construction of precast prestressed concrete girder and steel girder bridges, elastomeric bearings are generally not offset to account for temperature during erection of the girders as are most other bearing systems. Girders may be set atop elastomeric bearings at temperatures other than the mean of the temperature range. This is statistically reconciled by assuming a maximum thermal movement in either direction of:

$$\Delta_{temp} = 0.75 \cdot \alpha \cdot L \cdot (T_{MaxDesign} - T_{MinDesign})$$

where $T_{MaxDesign}$ is the maximum anticipated bridge deck average temperature and $T_{MinDesign}$ is the minimum anticipated bridge deck average temperature during the life of the bridge.

For precast prestressed concrete girder bridges, the maximum thermal movement, Δ_{temp}, shall be added to shrinkage and long-term creep movements to determine total bearing height required. The shrinkage movement for this bridge type shall be half that calculated for a cast-in-place concrete bridge.

For cast-in-place concrete bridges, it is assumed that the temperature of concrete at placement is equal to the normal temperature, as defined by the *Standard Specifications*. Total shrinkage movement is added to the maximum thermal movement, Δ_{temp}, to determine required total height of the elastomeric bearing, as noted in Section 9.1.2-A.

B. **Fabric Pad Sliding Bearings –** Fabric pad sliding bearings incorporate fabric pads with a polytetrafluoroethylene (PTFE) - stainless steel sliding interface to permit large translational movements. Unlike a steel reinforced elastomeric bearing having substantial shear flexibility, the fabric pad alone cannot accommodate translational movements. Fabric pads can accommodate very small amounts of rotational movement; less than can be accommodated by more flexible steel reinforced elastomeric bearings. Practical size considerations limit the use of fabric pad bearings to total service load reactions under about 600 kips.

PTFE, also referred to as Teflon, is available in several forms: unfilled sheet, dimpled lubricated, filled, and woven. Filled PTFE contains glass, carbon, or other chemically inert fibers that enhance its resistance to creep (cold flow) and wear. Interweaving high strength fibers through PTFE material creates woven PTFE. Dimpled PTFE contains dimples, which act as reservoirs for silicone grease lubricant.

Friction coefficients for PTFE – stainless steel surfaces vary significantly as a function of PTFE type, contact pressure, and ambient temperature. The AASHTO LRFD provides friction coefficients as a function of these variables. Dimpled lubricated PTFE at high temperatures and high contact pressures typically yield the lowest friction coefficients. Filled PTFE at low temperatures and low contact pressures yield the highest friction coefficients.

In order to minimize frictional resistance, a Number 8 (Mirror) finish should be specified for all flat stainless steel surfaces in contact with PTFE. The low-friction characteristics of a PTFE – stainless steel interface are actually facilitated by fragmentary PTFE sliding against PTFE after the fragmentary PTFE particles are absorbed into the asperities of the stainless steel surface.

In fabric pad sliding bearings, the PTFE is generally recessed half its depth into a steel backing plate, which is generally bonded to the top of a fabric pad. The recess provides confinement that minimizes creep (cold flow). The stainless steel sheet is typically seal welded to a steel sole plate attached to the superstructure.

Silicone grease is not recommended for non-dimpled PTFE. Any grease will squeeze out under high pressure and attract potentially detrimental dust and other debris.

1. **Fabric Pad Design –** WSDOT's design criteria for fabric pad bearings are based upon manufacturers' recommendations, supported by years of satisfactory performance. These criteria differ from AASHTO LRFD provisions in that they recognize significantly more rotational flexibility in the fabric pad. Our maximum allowable service load average bearing pressure for fabric pad bearing design is 1,200 psi. WSDOT's maximum allowable service load edge bearing pressure for fabric pad bearing design is 2,000 psi. A 1,200 psi compressive stress corresponds to 10 percent strain in the fabric pad while a 2,000 psi compressive stress corresponds to 14 percent compressive strain. Based upon this information, the following design relationship can be established:

$$\theta = \frac{2 \times (.14 - .10) \times T}{L}$$

$$\theta = \frac{.08 \times T}{L}$$

$$T = 12.5 \times \theta \times L$$

Where Θ = rotation due to loading plus construction tolerances

L = pad length (parallel to longitudinal axis of beam)

T = fabric pad thickness required

As an example:

Given: $DL + LL$ = 240 kips

Rotation = 0.015 radians

Allowable bearing pad pressure = 1200 psi

f'_c = 3000 psi

Find: fabric pad plan area and thickness required

Solution:

Pad area required = 240,000/1200 = 200 in^2

Try a 20″ wide × 10″ long fabric pad

T = 12.5(.015)(10″) = 1.88″

Solution: Use a 20″ × 10″ × 1⅞″ fabric pad.

2. **PTFE – Stainless Steel Sliding Surface Design –** PTFE shall be ⅛ in. thick and recessed 1/16 in. into a ½ in. thick steel plate that is bonded to the top of the fabric pad. With the PTFE confined in this recess, the LRFD code permits an average contact stress of 4,500 psi for all loads calculated at the service limit state and an average contact stress of 3,000 psi for permanent loads calculated at the service limit state. The LRFD code permits slightly higher edge contact stresses.

For example, suppose:

DL = 150 kips

LL = 90 kips

A_{PTFE} > (150 kips + 90 kips)/4.5 ksi = 53.3 in^2

A_{PTFE} > 150 kips/3 ksi = 50.0 in^2

Selected area of PTFE must exceed 53.3 in^2

Stainless steel sheet shall be finished to a No. 8 (Mirror) finish and seal welded to the sole plate.

C. **Pin Bearings –** Steel pin bearings are generally used to support heavy reactions with moderate to high levels of rotation about a single predetermined axis. This situation generally occurs with long straight steel plate girder superstructures.

D. **Rocker and Roller Type Bearings –** Steel rocker bearings have been used extensively in the past to allow both rotation and longitudinal movement while supporting large loads. Because of their seismic vulnerability and the more extensive use of steel reinforced elastomeric bearings, rocker bearings are no longer specified for new bridges.

Steel roller bearings have also been used extensively in the past. Roller bearings permit both rotation and longitudinal movement. Pintles are generally used to connect the roller bearing to the superstructure above and to the bearing plate below. Nested roller bearings have also been used in the past. Having been supplanted by more economical steel reinforced elastomeric bearings, roller bearings are infrequently used for new bridges today.

E. **Spherical Bearings –** A spherical bearing relies upon the low-friction characteristics of a curved PTFE - stainless steel interface to provide a high level of rotational flexibility in multiple directions. An additional flat PTFE - stainless steel surface can be incorporated into the bearing to additionally provide either guided or non-guided translational movement capability.

Woven PTFE is generally used on the curved surfaces of spherical bearings. Woven PTFE exhibits enhanced creep (cold flow) resistance and durability characteristics relative to unwoven PTFE. When spherical bearings are detailed to accommodate translational movement, woven PTFE is generally specified on the flat sliding surface also. The LRFD code permits an average contact stress of 4,500 psi for all loads calculated at the service limit state and an average contact stress of 3,000 psi for permanent loads calculated at the service limit state. The LRFD code permits slightly higher edge contact stresses.

Both stainless steel sheet and solid stainless steel have been used for the convex sliding surface of spherical bearings. According to one manufacturer, curved sheet is generally acceptable for contact surface radii greater than 14 in to 18. in For smaller radii, a solid stainless steel convex plate or a stainless steel inlay is used. The inlay is welded to the solid conventional steel. If the total height of the convex plate exceeds about 5 in, a stainless steel inlay will likely be more economical.

Most spherical bearings are fabricated with the concave surface oriented downward to minimize dirt infiltration between PTFE and the stainless steel surface. Structural analysis of the overall structure must recognize the center of rotation of the bearing not being coincident with the neutral axis of the girder above.

The contract drawings must show the diameter and height of the spherical bearing in addition to all dead, live, and seismic loadings. Total height depends upon the radius of the curved surface, diameter of the bearing, and total rotational capacity required. Consult the Bearing and Expansion Joint Specialist for design calculation examples. Additionally, sole plate connections, base plate, anchor bolts, and any appurtenances for horizontal force transfer must be detailed on the plans. The spherical bearing manufacturer is required to submit shop drawings and detailed structural design calculations of spherical bearing components for review by the Engineer.

F. **Disk Bearings –** A disk bearing is composed of an annular shaped urethane disk designed to provide moderate levels of rotational flexibility. A steel shear-resisting pin in the center provides resistance against lateral force. A flat PTFE - stainless steel surface can be incorporated into the bearing to also provide translational movement capability, either guided or non-guided.

G. **Seismic Isolation Bearings –** Seismic isolation bearings mitigate the potential for seismic damage by utilizing two related phenomena: dynamic isolation and energy dissipation. Dynamic isolation allows the superstructure to essentially float, to some degree, while substructure elements below move with the ground during an earthquake. The ability of some bearing materials and elements to deform in certain predictable ways allows them to dissipate earthquake energy that might otherwise damage critical structural elements.

Numerous seismic isolation bearings exist, each relying upon varying combinations of dynamic isolation and energy dissipation. These devices include lead core elastomeric bearings, high damping rubber, friction pendulum, hydraulic dampers, and various hybrid variations.

Effective seismic isolation bearing design requires a thorough understanding of the dynamic characteristics of the overall structure as well as the candidate isolation devices. Isolation devices are differentiated by maximum compressive load capacity, lateral stiffness, lateral displacement range, maximum lateral load capacity, energy dissipation per cycle, functionality in extreme environments, resistance to aging, fatigue and wear properties, and effects of size.

The Highway Innovative Technology Evaluation Center (HITEC) has developed guidelines for testing seismic isolation and energy dissipating devices. With the goal of disseminating objective information to design professionals, HITEC has tested and published technical reports on numerous proprietary devices. These tests include performance benchmarks, compressive load dependent characterization, frequency dependent characterization, fatigue and wear, environmental aging, dynamic performance at extreme temperatures, durability, and ultimate performance.

9.2.6 Miscellaneous Details

A. **Temporary Support before Grouting Masonry Plate –** The masonry plate of a HLMR bearing is generally supported on a grout pad that is installed after the bearing and superstructure girders above have been erected. This procedure allows the Contractor to level and slightly adjust the horizontal location of the bearing before immobilizing it by placing the grout pad. Several methods have been developed to temporarily support the masonry plate until the grout is placed. The two most commonly used methods will be discussed here.

1. **Shim Packs –** Multiple stacks of steel shim plates can be placed atop the concrete surface to temporarily support the weight of the girders on their bearings before grouting. engineering judgment must be used in selecting the number and plan size of the shims taking grout flowability and shim height adjustability into consideration.

2. **Two-step Grouting with Cast Sleeves –** A two-step grouting procedure with cast-in-place voided cores can be used for smaller HLMRs not generally subjected to uplift. Steel studs are welded to the underside of the masonry plate to coincide with the voided cores. With temporary shims installed between the top of the concrete surface and the underside of the masonry plate, the voided cores are fully grouted. Once the first stage grout has attained strength, the shims are removed, the masonry plate is dammed, and grout is placed between the top of the concrete surface and the underside of the masonry plate.

B. **Anchor Bolts –** Anchor bolts shall be designed to resist all horizontal shear forces and direct tension force due to uplift.

Anchor bolts shall be ASTM A 449 where strengths equal to ASTM A 325 are required and ASTM A 354, Grade BD, where strengths equal to ASTM A 490 are required. ASTM F 1554 bolts with supplemental Charpy test requirements shall be specified in applications in which the bolts are subject to seismic loading.

9.2.7 Contract Drawing Representation

High load multi-rotational bearings are generally depicted schematically in the contract drawings. Each bearing manufacturer has unique fabricating methods and procedures that allow it to fabricate a bearing most economically. Depicting the bearings schematically with loads and geometric requirements provides each manufacturer the flexibility to innovatively achieve optimal economy.

9.2.8 Shop Drawing Review

The manufacturer designs and develops shop drawings for high load multi-rotational bearings. The Engineer is responsible for checking and approving the calculations and shop drawings. The calculations shall verify the structural adequacy of all components of the bearing. Each bearing shall be detailed to permit the inspection and replacement of components.

9.2.9 Bearing Replacement Considerations

In some situations, existing bearings, or elements thereof, must be replaced consequent to excessive wear or seismic rehabilitation. Bearing replacement operations generally require lifting of superstructure elements using hydraulic jacks. The designer is responsible for calculating anticipated lifting loads and stipulating these loads on the contract drawings. Limitations on lift height shall also be specified. Consideration shall be given to lift height as it relates to adjacent expansion joints elements and adjoining sections of railing. Stresses induced as a consequence of differential lift height between multiple hydraulic jacks are generally addressed by stipulating restrictions in the plans or special provisions.

Past experience shows that actual lifting loads nearly always exceed calculated lifting loads. Many factors may contribute to this phenomenon, including friction in the hydraulic jack system and underestimation of superstructure dead loads. Unless the Bearing and Expansion Joint Specialist or the Bridge Design Engineer approves a variance, contract documents shall require that all hydraulic jacks be sized for 200 percent of the calculated lifting load. In all cases, the designer shall verify from manufacturer's literature that appropriate hydraulic jacks are available to operate within the space limitations imposed by a particular design situation.

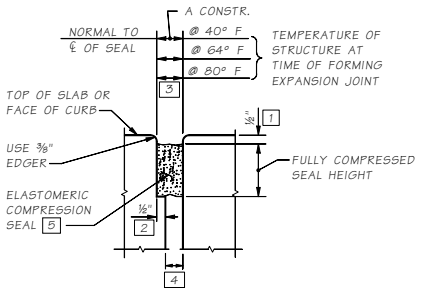

COMPRESSION SEAL

CONCRETE OPENING

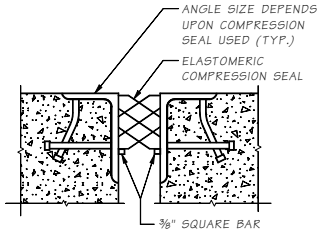

COMPRESSION SEAL

ARMORED OPENING.
USE IN BRIDGE WIDENINGS WITH EXISTING ARMORED JOINTS

COMPRESSION SEAL TABLE

D.S. BROWN		WATSON BOWMAN ACME	
SEAL	WIDTH	SEAL	WIDTH
CV-2000	2"	WA-200	2"
CV-2502	2½"	WA-250	2½"
CV-3000	3"	WA-300	3"
CV-3500	3½"	WA-350	3½"
CV-4000	4"	WA-400	4"

TESTING SHALL BE PER AASHTO M-220 PRIOR TO USE.

NOTE:
COMPRESSION SEALS GREATER THAN FOUR INCHES WIDE SHOULD NOT BE USED

1. USE ½" FOR ALL SEALS.
2. USE ½" FOR ALL SEALS.
3. COMPUTE "A CONSTR." PER EQUATION (12) @ 40°F, 64°F, AND 80°F.
4. TO BE CHECKED BY THE DESIGNER. SHALL BE LARGE ENOUGH TO PREVENT CLOSURE UNDER THERMAL MOVEMENTS.
5. SEE BDM SECTION 9.1.3A AND DESIGN EXAMPLE FOR COMPRESSION SEAL DESIGN AND SEE "COMPRESSION SEAL TABLE" ON THIS SHEET.

NOTE:
DESIGNER TO USE APPROPRIATE DETAILS FROM THIS SHEET AND CONSULT WITH EXPANSION JOINT SPECIALIST FOR LATEST PLAN SHEET LAYOUT, NOTES, AND UP-TO-DATE DETAILS.

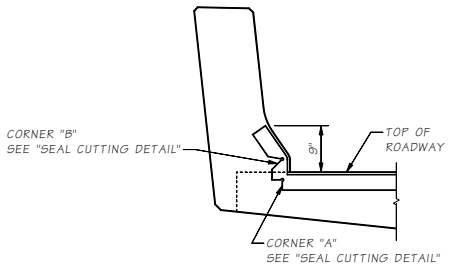

SECTION A

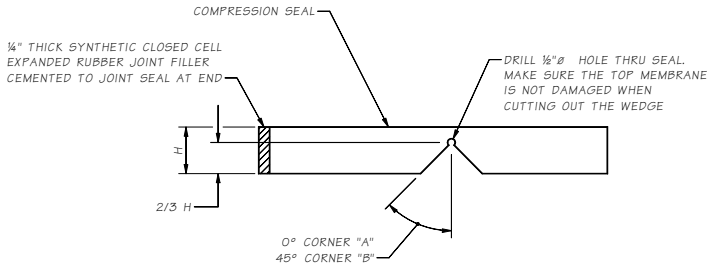

SEAL CUTTING DETAIL

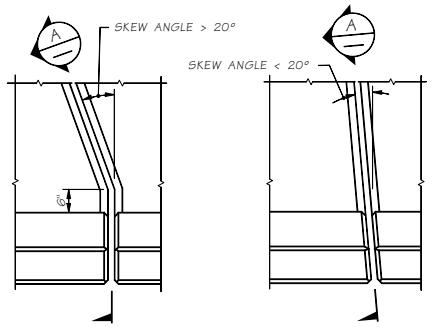

PLAN
EXPANSION JOINT

Bridge Design Engr.	M:\STANDARDS\Expansion Joints\COMPRESSION SEAL DET.MAN								
Supervisor					REGION NO.	STATE	FED. AID PROJ. NO.	SHEET NO.	TOTAL SHEETS
Designed By					10	WASH.			
Checked By					JOB NUMBER				
Detailed By									
Bridge Projects Engr.									
Prelim. Plan By									
Architect/Specialist	DATE	REVISION	BY	APP'D					

BRIDGE AND STRUCTURES OFFICE

Washington State Department of Transportation

EXPANSION JOINTS

EXPANSION JOINT DETAILS
COMPRESSION SEAL

BRIDGE SHEET NO.
SHEET OF SHEETS

SR JOB NO. SHEET

Thu Sep 02 14:18:11 2010 12/11/97

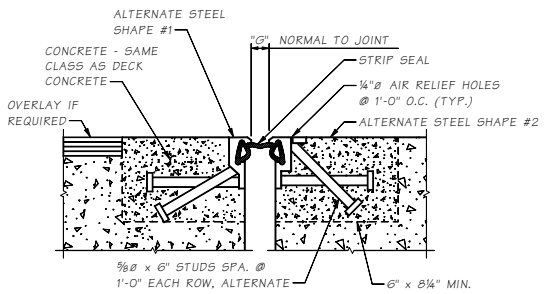

STRIP SEAL

STANDARD ANCHORAGE
USE FOR NORMAL TRAFFIC VOLUME
EXTEND SLAB STEEL INTO THE BLOCKOUT

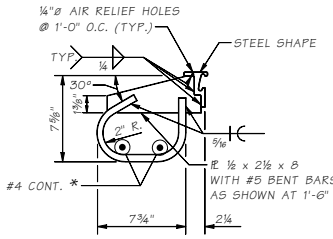

STRIP SEAL

SPECIAL ANCHORAGE
USE FOR HIGH TRAFFIC VOLUME
REQUIRES 9" x 1'-0" MIN. BLOCKOUT
EXTEND SLAB STEEL INTO THE BLOCKOUT
EXTEND BLOCKOUT TO EDGE OF DECK

* PLACED AFTER EXPANSION JOINT IS IN POSITION. THREAD INTO PLACE FROM THE ENDS.

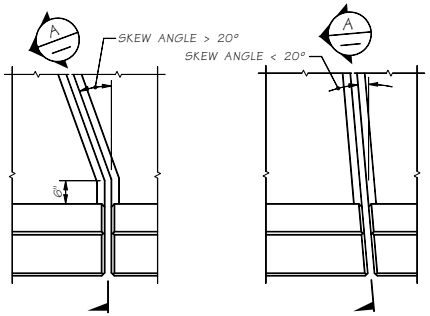

PLAN EXPANSION JOINT

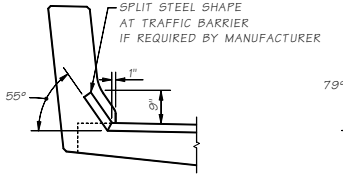

SECTION A

FOR STRIP SEAL "F" SHAPE BARRIER

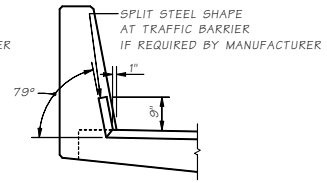

SECTION A

FOR STRIP SEAL SINGLE SLOPE BARRIER

NOTE:
DESIGNER TO USE APPROPRIATE DETAILS FROM THIS SHEET AND CONSULT WITH EXPANSION JOINT SPECIALIST FOR LATEST PLAN SHEET LAYOUT, NOTES, AND UP-TO-DATE DETAILS.

STRIP SEAL NOTES:

1. DESIGNER SHALL INCLUDE APPROPRIATE DETAILS AND TABLES IN THE PLANS.
2. SEE BDM SECTION 9.1.4B AND DESIGN EXAMPLE FOR STRIP SEAL DESIGN AND FOR DETERMINING OPENING "G" NORMAL TO THE JOINT. FILL IN AMOUNTS CALCULATED AND STEEL SHAPES SELECTED.
3. FOR SKEW ANGLE GREATER THAN 30° SEE JOINT SPECIALIST.
4. SEE JOINT SPECIALIST PRIOR TO SPECIFYING A 5" MOTION RANGE STRIP SEAL.
5. A GROUP 1 STRIP SEAL DOES NOT ALLOW FULL CLOSURE OF STEEL SHAPES. A GROUP 2 STRIP SEAL ALLOWS FULL CLOSURE OF STEEL SHAPES.
6. DO NOT USE STEEL SHAPES WITH HORIZONTAL LEGS IN CURB OR BARRIER REGION.

2" MOTION RANGE

** GROUP	MANUFACTURER	ITEM NAME	OPENING "G" NORMAL TO JT.		MIN. INSTALLATION WIDTH NORMAL TO JOINT	OPENING "G" NORMAL TO JOINT		
			MIN.	MAX.		@40°F	@64°F	@80°F
1	D. S. BROWN	DSB STRIP SEAL A2R-400	½"	4½"	1½"			
2	WATSON BOWMAN ACME	WABO STRIP SEAL SE-300	0"	3"	1½"			
2	R.J. WATSON, INC.	R.J. STRIP SEAL 200	0"	2"	1½"			
1	FYFE CO. LLC	TYFO STRIP SEAL FS400	¼"	4¾"	1½"			

3" MOTION RANGE

** GROUP	MANUFACTURER	ITEM NAME	OPENING "G" NORMAL TO JT.		MIN. INSTALLATION WIDTH NORMAL TO JOINT	OPENING "G" NORMAL TO JOINT		
			MIN.	MAX.		@40°F	@64°F	@80°F
1	D. S. BROWN	DSB STRIP SEAL A2R-400	½"	4½"	1½"			
2	WATSON BOWMAN ACME	WABO STRIP SEAL SE-300	0"	3"	1½"			
2	R.J. WATSON, INC.	R.J. STRIP SEAL 300	0"	3"	1½"			
1	FYFE CO. LLC	TYFO STRIP SEAL FS400	¼"	4¾"	1½"			

4" MOTION RANGE

** GROUP	MANUFACTURER	ITEM NAME	OPENING "G" NORMAL TO JT.		MIN. INSTALLATION WIDTH NORMAL TO JOINT	OPENING "G" NORMAL TO JT.		
			MIN.	MAX.		@40°F	@64°F	@80°F
1	D. S. BROWN	DSB STRIP SEAL A2R-400	½"	4½"	1½"			
2	WATSON BOWMAN ACME	WABO STRIP SEAL SE-400	0"	4"	1½"			
2	R.J. WATSON, INC.	R.J. STRIP SEAL 400	0"	4"	1½"			
1	FYFE CO. LLC	TYFO STRIP SEAL FS400	¼"	4¾"	1½"			

5" MOTION RANGE

** GROUP	MANUFACTURER	ITEM NAME	OPENING "G" NORMAL TO JT.		MIN. INSTALLATION WIDTH NORMAL TO JOINT	OPENING "G" NORMAL TO JT.		
			MIN.	MAX.		@40°F	@64°F	@80°F
2	D. S. BROWN	DSB STRIP SEAL L2-500	0"	5"	1½"			
2	WATSON BOWMAN ACME	WABO STRIP SEAL SE-500	0"	5"	1½"			
1	R.J. WATSON, INC.	R.J. STRIP SEAL 500	½"	5"	1½"			
1	FYFE CO. LLC	TYFO STRIP SEAL FS500	¼"	5½"	1½"			

** GROUP COLUMN NOT TO BE SHOWN IN CONTRACT PLANS. FOR DESIGN PURPOSES ONLY.

STEEL SHAPE TYPES

MANUFACTURER	ITEM NAME	TYPE	S	T	TYPE	V	W	TYPE	X	Y
D. S. BROWN	DSB STRIP SEAL	SSCM2	1¼"	3¾"	SSA2 α	1¼"	2"	SSE2 α	1"	1½"
WATSON BOWMAN ACME	WABO STRIP SEAL	M, R, P	2¾"	3¼"	A	1¼"	2"	E	1½"	1½"
R.J. WATSON, INC.	RJ STRIP SEAL	RJM	2¾"	3¼"	RJA	1¼"	2"	RJE	1¼"	1½"
FYFE CO. LLC	TYFO STRIP SEAL	C	2½"	3"	A	1⅜"	2"	E	1⅜"	1⅜"

α TRIM VERTICAL LEG OF SSCM2 SHAPE FOR USE IN TRAFFIC BARRIER

Bridge Design Engr.	M:\STANDARDS\Expansion Joints\STRIP SEAL DETAILS.MAN				REGION NO.	STATE	FED. AID PROJ. NO.	SHEET NO.	TOTAL SHEETS
Supervisor					10	WASH.			
Designed By					JOB NUMBER				
Checked By									
Detailed By									
Bridge Projects Engr.									
Prelim. Plan By									
Architect/Specialist	DATE	REVISION	BY	APP'D					

BRIDGE AND STRUCTURES OFFICE

Washington State Department of Transportation

EXPANSION JOINTS

EXPANSION JOINT DETAILS STRIP SEAL

BRIDGE SHEET NO. SHEET OF SHEETS

SR JOB NO. SHEET 9.1-A2-1

Thu Sep 02 14:18:16 2010

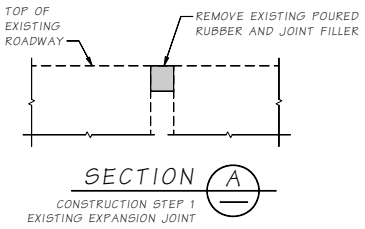

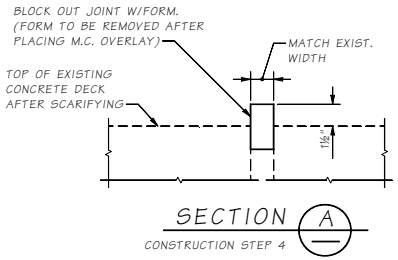

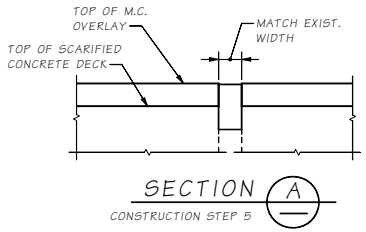

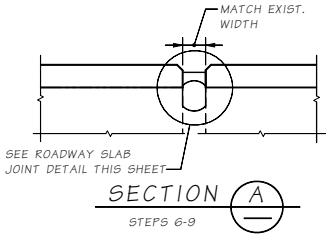

NOTE TO DESIGNER:
CONSTRUCTION STEPS ARE FOR USE WHEN APPLYING A MODIFIED CONCRETE OVERLAY ONLY.

CONSTRUCTION STEPS:

1. REMOVE EXISTING POURED RUBBER & JOINT FILLER MATERIAL FROM EXPANSION JOINT.
2. CLEAN SIDES AND BOTTOM OF JOINT OPENING TO CLEAN AND SOUND CONCRETE.
3. BLOW JOINT OPENING WITH OIL-FREE COMPRESSED AIR TO REMOVE LAITANCE AND DEBRIS FROM REMOVAL OPERATIONS.
4. PLACE FORM IN EXISTING JOINT OPENING TO A HEIGHT LEVEL WITH THE FINAL ROADWAY ELEVATION.
5. PLACE MODIFIED CONCRETE OVERLAY TO FINAL RDW'Y ELEVATION.
6. REMOVE FORM FROM JOINT OPENING AND LIGHTLY SANDBLAST TO REMOVE ALL RESIDUE.
7. PLACE AN APPROPRIATELY SIZED BACKER ROD TO THE CORRECT DEPTH IN JOINT OPENING IN ACCORDANCE WITH SEALANT MANUFACTURER'S DIRECTIONS.
8. PLACE RAPID CURE SILICON SEALANT IN ACCORDANCE WITH MANUFACTURER'S DIRECTIONS.

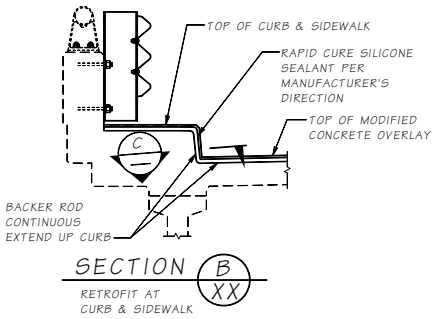

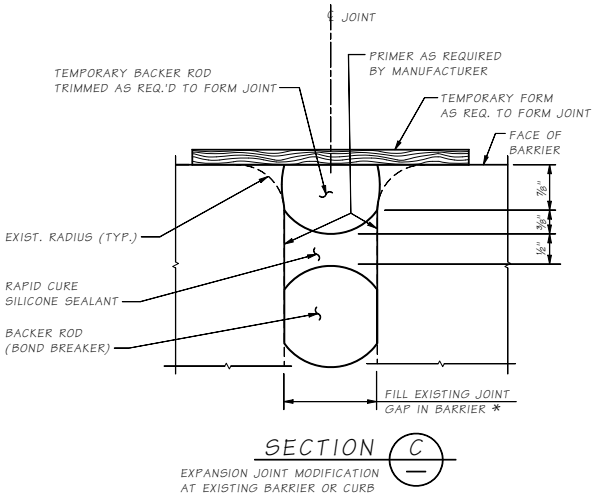

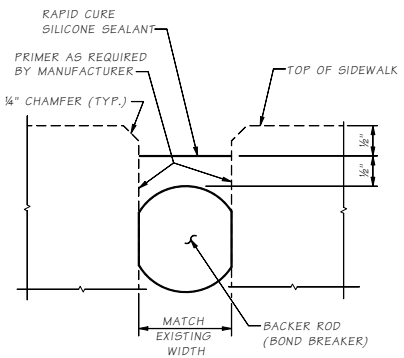

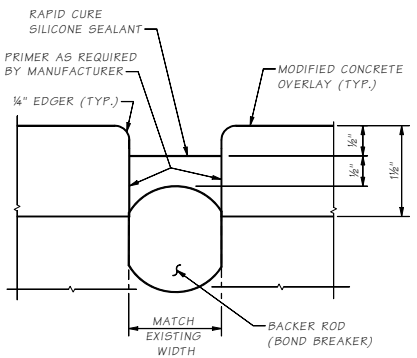

Bridge Design Engr.	M:\STANDARDS\Expansion Joints\SILICONE SEAL DETAILS.MAN				REGION NO.	STATE	FED. AID PROJ. NO.	SHEET NO.	TOTAL SHEETS
Supervisor					10	WASH.			
Designed By					JOB NUMBER				
Checked By									
Detailed By									
Bridge Projects Engr.									
Prelim. Plan By									
Architect/Specialist	DATE	REVISION	BY	APP'D					

BRIDGE AND STRUCTURES OFFICE

Washington State Department of Transportation

EXPANSION JOINTS

SILICONE SEAL EXPANSION JOINT DETAILS

BRIDGE SHEET NO.

SHEET OF SHEETS

SR JOB NO. SHEET

9.1-A3-1

Thu Sep 02 14:18:13 2010

Chapter 10 Signs, Barriers, Approach Slabs & Utilities

Contents

10.1 Sign and Luminaire Supports 10.1-1
- 10.1.1 Loads 10.1-1
- 10.1.2 Bridge Mounted Signs 10.1-2
- 10.1.3 Monotube Sign Structures Mounted on Bridges 10.1-5
- 10.1.4 Monotube Sign Structures 10.1-5
- 10.1.5 Foundations 10.1-8
- 10.1.6 Truss Sign Bridges: Foundation Sheet Design Guidelines 10.1-10

10.2 Bridge Traffic Barriers 10.2-1
- 10.2.1 General Guidelines 10.2-1
- 10.2.2 Bridge Railing Test Levels 10.2-1
- 10.2.3 Available WSDOT Designs 10.2-2
- 10.2.4 Design Criteria 10.2-5

10.3 At Grade Traffic Barriers 10.3-1
- 10.3.1 Median Barriers 10.3-1
- 10.3.2 Shoulder Barriers 10.3-2
- 10.3.3 Traffic Barrier Moment Slab 10.3-2
- 10.3.4 Precast Traffic Barrier 10.3-3

10.4 Bridge Traffic Barrier Rehabilitation 10.4-1
- 10.4.1 Policy 10.4-1
- 10.4.2 Guidelines 10.4-1
- 10.4.3 Design Criteria 10.4-1
- 10.4.4 WSDOT Bridge Inventory of Bridge Rails 10.4-2
- 10.4.5 Available Retrofit Designs 10.4-2
- 10.4.6 Available Replacement Designs 10.4-2

10.5 Bridge Railing 10.5-1
- 10.5.1 Design 10.5-1
- 10.5.2 Railing Types 10.5-1

10.6 Bridge Approach Slabs 10.6-1
- 10.6.1 Notes to Region for Preliminary Plan 10.6-1
- 10.6.2 Approach Slab Design Criteria 10.6-2
- 10.6.3 Bridge Approach Slab Detailing 10.6-2
- 10.6.4 Skewed Approach Slabs 10.6-3
- 10.6.5 Approach Anchors and Expansion Joints 10.6-4
- 10.6.6 Approach Slab Addition or Retrofit to Existing Bridges 10.6-4
- 10.6.7 Approach Slab Staging 10.6-6

10.7 Traffic Barrier on Approach Slabs 10.7-1
- 10.7.1 Approach Slab over Wing Walls, Cantilever Walls or Geosynthetic Walls 10.7-1
- 10.7.2 Approach Slab over SE Walls 10.7-3

10.8 Utilities Installed with New Construction 10.8-1
10.8.1 General Concepts 10.8-1
10.8.2 Utility Design Criteria. 10.8-4
10.8.3 Box/Tub Girder Bridges 10.8-5
10.8.4 Traffic Barrier Conduit 10.8-6
10.8.5 Conduit Types 10.8-7
10.8.6 Utility Supports 10.8-7

10.9 Utility Review Procedure for Installation on Existing Bridges 10.9-1
10.9.1 Utility Review Checklist 10.9-2

10.10 Resin Bonded Anchors 10.10-1

10.11 Drainage Design 10.11-1

Appendix 10.1-A1-1 Monotube Sign Bridge Layouts. 10.1-A1-1
Appendix 10.1-A1-2 Monotube Sign Bridge Structural Details 1 . . . . . 10.1-A1-2
Appendix 10.1-A1-3 Monotube Sign Bridge Structural Details 2 . . . . . 10.1-A1-3
Appendix 10.1-A2-1 Monotube Cantilever Layout 10.1-A2-1
Appendix 10.1-A2-2 Monotube Cantilever Structural Details 1 . . . . . 10.1-A2-2
Appendix 10.1-A2-3 Monotube Cantilever Structural Details 2 . . . . . 10.1-A2-3
Appendix 10.1-A3-1 Monotube Balanced Cantilever Layout 10.1-A3-1
Appendix 10.1-A3-2 Monotube Balanced Cantilever Structural Details 1 . . . . . 10.1-A3-2
Appendix 10.1-A3-3 Monotube Balanced Cantilever Structural Details 2 . . . . . 10.1-A3-3
Appendix 10.1-A4-1 Monotube Sign Structures Foundation Type 1 Sheet 1 of 2 . . . . . 10.1-A4-1
Appendix 10.1-A4-2 Monotube Sign Structures Foundation Type 1 Sheet 2 of 2 . . . . . 10.1-A4-2
Appendix 10.1-A4-3 Monotube Sign Structures Foundation Types 2 and 3 . . . . . 10.1-A4-3
Appendix 10.1-A5-1 Monotube Sign Structure Single Slope Traffic Barrier Foundation 10.1-A5-1
Appendix 10.2-A1-1 Traffic Barrier – Shape F Details 1 of 3. . . . . 10.2-A1-1
Appendix 10.2-A1-2 Traffic Barrier – Shape F Details 2 of 3. . . . . 10.2-A1-2
Appendix 10.2-A1-3 Traffic Barrier – Shape F Details 3 of 3. . . . . 10.2-A1-3
Appendix 10.2-A2-1 Traffic Barrier – Shape F Flat Slab Details 1 of 3 . . . . . 10.2-A2-1
Appendix 10.2-A2-2 Traffic Barrier – Shape F Flat Slab Details 2 of 3 . . . . . 10.2-A2-2
Appendix 10.2-A2-3 Traffic Barrier – Shape F Flat Slab Details 3 of 3 . . . . . 10.2-A2-3
Appendix 10.2-A3-1 Traffic Barrier – Single Slope Details 1 of 3 . . . . . 10.2-A3-1
Appendix 10.2-A3-2 Traffic Barrier – Single Slope Details 2 of 3 . . . . . 10.2-A3-2
Appendix 10.2-A3-3 Traffic Barrier – Single Slope Details 3 of 3 . . . . . 10.2-A3-3
Appendix 10.2-A4-1 Pedestrian Barrier Details 1 of 3. . . . . 10.2-A4-1
Appendix 10.2-A4-2 Pedestrian Barrier Details 2 of 3. . . . . 10.2-A4-2
Appendix 10.2-A4-3 Pedestrian Barrier Details 3 of 3. . . . . 10.2-A4-3
Appendix 10.2-A5-1A Traffic Barrier – Shape F 42″ Details 1 of 3 (TL-4) 10.2-A5-1
Appendix 10.2-A5-1B Traffic Barrier – Shape F 42″ Details 1 of 3 (TL-5) 10.2-A5-2
Appendix 10.2-A5-2A Traffic Barrier – Shape F 42″ Details 2 of 3 (TL-4) 10.2-A5-1
Appendix 10.2-A5-2B Traffic Barrier – Shape F 42″ Details 2 of 3 (TL-5) 10.2-A5-2
Appendix 10.2-A5-3 Traffic Barrier – Shape F 42″ Details 3 of 3 (TL-4 and TL-5) 10.2-A5-3
Appendix 10.2-A6-1A Traffic Barrier – Single Slope 42″ Details 1 of 3 (TL-4) 10.2-A6-1
Appendix 10.2-A6-1B Traffic Barrier – Single Slope 42″ Details 1 of 3 (TL-5) 10.2-A6-2
Appendix 10.2-A6-2A Traffic Barrier – Single Slope 42″ Details 2 of 3 (TL-4) 10.2-A6-3
Appendix 10.2-A6-2B Traffic Barrier – Single Slope 42″ Details 2 of 3 (TL-5) 10.2-A6-4
Appendix 10.2-A6-3 Traffic Barrier – Single Slope 42″ Details 3 of 3 (TL-4 and TL-5) 10.2-A6-5
Appendix 10.2-A7-1 Traffic Barrier – Shape F Luminaire Anchorage Details. 10.2-A7-1

Appendix 10.2-A7-2 Traffic Barrier – Single Slope Luminaire Anchorage Details 10.2-A7-2
Appendix 10.4-A1-1 Thrie Beam Retrofit Concrete Baluster 10.4-A1-1
Appendix 10.4-A1-2 Thrie Beam Retrofit Concrete Railbase 10.4-A1-2
Appendix 10.4-A1-3 Thrie Beam Retrofit Concrete Curb 10.4-A1-3
Appendix 10.4-A1-4 WP Thrie Beam Retrofit SL1 Details 1 of 2 . . . . . 10.4-A1-4
Appendix 10.4-A1-5 WP Thrie Beam Retrofit SL1 Details 2 of 2 . . . . . 10.4-A1-5
Appendix 10.4-A2-1 Traffic Barrier – Shape F Rehabilitation Details 1 of 3 . . . . . 10.4-A2-1
Appendix 10.4-A2-2 Traffic Barrier – Shape F Rehabilitation Details 2 of 3 . . . . . 10.4-A2-2
Appendix 10.4-A2-3 Traffic Barrier – Shape F Rehabilitation Details 3 of 3 . . . . . 10.4-A2-3
Appendix 10.5-A1-1 Bridge Railing Type Pedestrian Details 1 of 2 . . . . . 10.5-A1-1
Appendix 10.5-A1-2 Bridge Railing Type Pedestrian Details 2 of 2 . . . . . 10.5-A1-2
Appendix 10.5-A2-1 Bridge Railing Type BP Details 1 of 2 . . . . . 10.5-A2-1
Appendix 10.5-A2-2 Bridge Railing Type BP Details 2 of 2 . . . . . 10.5-A2-2
Appendix 10.5-A3-1 Bridge Railing Type S-BP Details 1 of 2 . . . . . 10.5-A3-1
Appendix 10.5-A3-2 Bridge Railing Type S-BP Details 2 of 2 . . . . . 10.5-A3-2
Appendix 10.5-A4-1 Pedestrian Railing Details 1 of 2 . . . . . 10.5-A4-1
Appendix 10.5-A4-2 Pedestrian Railing Details 2 of 2 . . . . . 10.5-A4-2
Appendix 10.5-A5-1 Bridge Railing Type Chain Link Snow Fence 10.5-A5-1
Appendix 10.5-A5-2 Bridge Railing Type Chain Link Fence 10.5-A5-2
Appendix 10.6-A1-1 Bridge Approach Slab Details 1 of 3 . . . . . 10.6-A1-1
Appendix 10.6-A1-2 Bridge Approach Slab Details 2 of 3 . . . . . 10.6-A1-2
Appendix 10.6-A1-3 Bridge Approach Slab Details 3 of 3 . . . . . 10.6-A1-3
Appendix 10.6-A2-1 Pavement Seat Repair Details 10.6-A2-1
Appendix 10.6-A2-2 Pavement Seat Repair Details 10.6-A2-2
Appendix 10.8-A1-1 Utility Hanger Details 10.8-A1-1
Appendix 10.8-A1-2 Utility Hanger Details 10.8-A1-2
Appendix 10.9-A1-1 Utility Installation Guideline Details for Existing Bridges 10.9-A1-1
Appendix 10.11-A1-1 Bridge Drain Modification 10.11-A11
Appendix 10.11-A1-2 Bridge Drain Modification for Types 2 thru 5 . . . . . 10.11-A12

10.1 Sign and Luminaire Supports

10.1.1 Loads

A. **General –** The reference used in developing the following office criteria is the AASHTO "*Standard Specifications for Structural Supports for Highway Signs, Luminaires, and Traffic Signals*," Fourth Edition Dated 2001 including interims, and shall be the basis for analysis and design.

B. **Dead Loads**

Sign (incl. panel and windbeams, does not include vert. bracing.)	3.25 lbs/ft^2
Luminaire (effective projected area of head = 3.3 sq ft)	60 lbs/each
Fluorescent Lighting	3.0 lbs/ln ft
Standard Signal Head	60 lbs/each
Mercury Vapor Lighting	6.0 lbs/ln ft
Sign Brackets	Calc.
Structural Members	Calc.
5 foot wide maintenance walkway (incl. sign mounting brackets & handrail)	160 lbs/ln ft
Signal Head w/3 lenses (effective projected area with backing plate = 9.2 sq ft)	60 lbs each

C. **Wind Loads –** A major change in the AASHTO 2001 Specification wind pressure equation is the use of a 3 second gust wind speed in place of a fastest-mile wind speed used in the previous specification. The 3 second wind gust map in AASHTO is based on the wind map in ANSI/ASCE 7-95.

Basic wind speed of 90 mph shall be used in computing design wind pressure using Equation 3-1 of AASHTO Section 3.8.1.

Do not use the Alternate Method of Wind Pressures given in Appendix C of the AASHTO 2001 Specifications.

D. **Design Life and Recurrence Interval –** (Table 3-3, AASHTO 2001)

50 years for luminaire supports, overhead sign structures, and traffic signal structures.

10 years for roadside sign structures.

E. **Ice Loads –** 3 psf applied around all the surfaces of structural supports, horizontal members, and luminaires, but applied to only one face of sign panels (AASHTO Section 3.7).

Walk-through VMS shall not be installed in areas where appreciable snow loads may accumulate on top of the sign, unless positive steps are taken to prevent snow build-up.

F. **Fatigue Design –** Fatigue design shall conform to AASHTO Section 11. Fatigue Categories are listed in Table 11-1. Cantilever structures, poles, and bridge mounted sign brackets shall conform to the following fatigue categories.

Fatigue Category I for overhead cantilever sign structures (maximum span of 30 ft. and no VMS installation), high level (high mast) lighting poles 100 ft. or taller in height, bridge-mounted sign brackets, and all signal bridges.

Fatigue Category II for high level (high mast) lighting poles between 51 ft. and 99 ft. in height.

Fatigue Category III for lighting poles 50 ft. or less in height with rectangular, square or non-tapered round cross sections, and overhead cantilever traffic signals at intersections (maximum cantilever length 65 ft.). If vehicle speeds are posted at 45 mph or greater, then overhead cantilever traffic signal structures shall be designed for Fatigue Category I.

Sign bridges, cantilever sign structures, signal bridges, and overhead cantilever traffic signals mounted on bridges shall be either attached to substructure elements (e.g. crossbeam extensions) or to the bridge superstructure at pier locations. Mounting these features to bridges as described above will help to avoid resonance concerns between the bridge structure and the signing or signal structure.

The "XYZ" limitation shown in Table 10.1.4-2 shall be met for Monotube Cantilevers. The "XYZ" limitation consists of the product of the sign area (XY) and the arm from the centerline of the posts to the centerline of the sign (Z). See Appendix 10.1-A2-1 for details.

G. **Live Load –** A live load consisting of a single load of 500 lb distributed over 2.0 ft transversely to the member shall be used for designing members for walkways and platforms. The load shall be applied at the most critical location where a worker or equipment could be placed, see AASHTO 2001, Section 3.6.

F. **Group Load Combinations** – Sign, luminaire, and signal support structures are designed using the maximum of the following four load groups (AASHTO Section 3.4 and Table 3-1):

Group Load	Load Combination	Percent of *Allowable Stress
I	DL	100
II	DL+W**	133
III	DL+Ice+½(W**)	133
IV	Fatigue	See AASHTO Section 11 for Fatigue loads and stress range

* No load reduction factors shall be applied in conjunction with these increased allowable stresses.
** W—Wind Load

10.1.2 Bridge Mounted Signs

A. **Vertical Clearance –** All new signs mounted on bridge structures shall be positioned such that the bottom of the sign or lighting bracket does not extend below the bottom of the bridge as shown in Figure 10.1.2-1. The position of the sign does not need to allow for the future placement of lights below the sign. If lights are to be added in the future they will be mounted above the sign. To ensure that the bottom of the sign or lighting bracket is above the bottom of the bridge, the designer should maintain at least a nominal 2 inch dimension between the bottom of the sign or lighting and the bottom of the bridge. Maximum sign height shall be decided by the Region. If the structure is too high above the roadway, then the sign should not be placed on the structure.

Bridge mounted sign brackets shall be designed to account for the weight of added lights, and for the wind affects on the lights to ensure bracket adequacy if lighting is attached in the future.

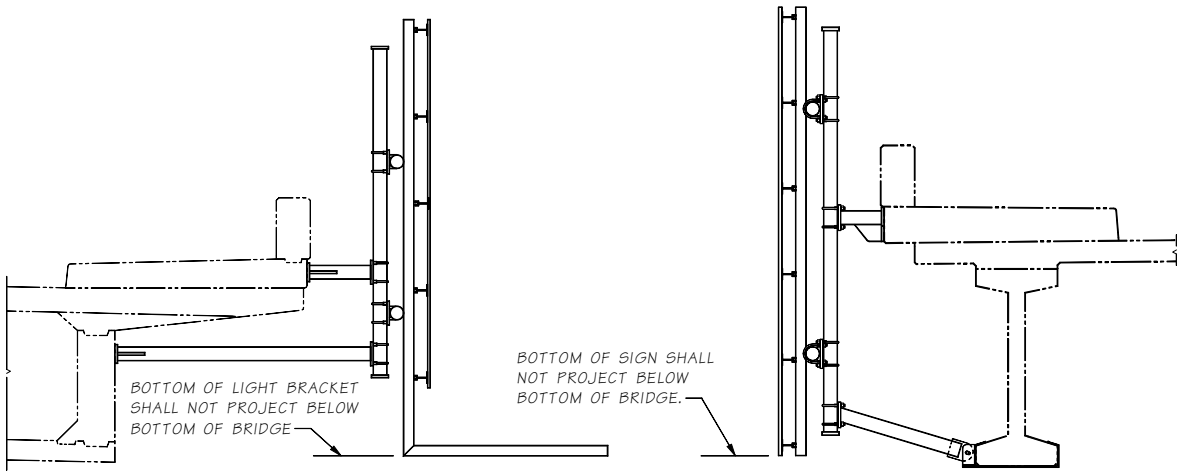

Sign Vertical Clearance
Figure 10.1.2-1

B. **Geometrics**

1. Signs should be installed at approximate right angles to approaching motorists. For structures above a tangent section of roadway, signs shall be designed to provide a sign skew within 5° from perpendicular to the lower roadway (see Figure 10.1.2-2).

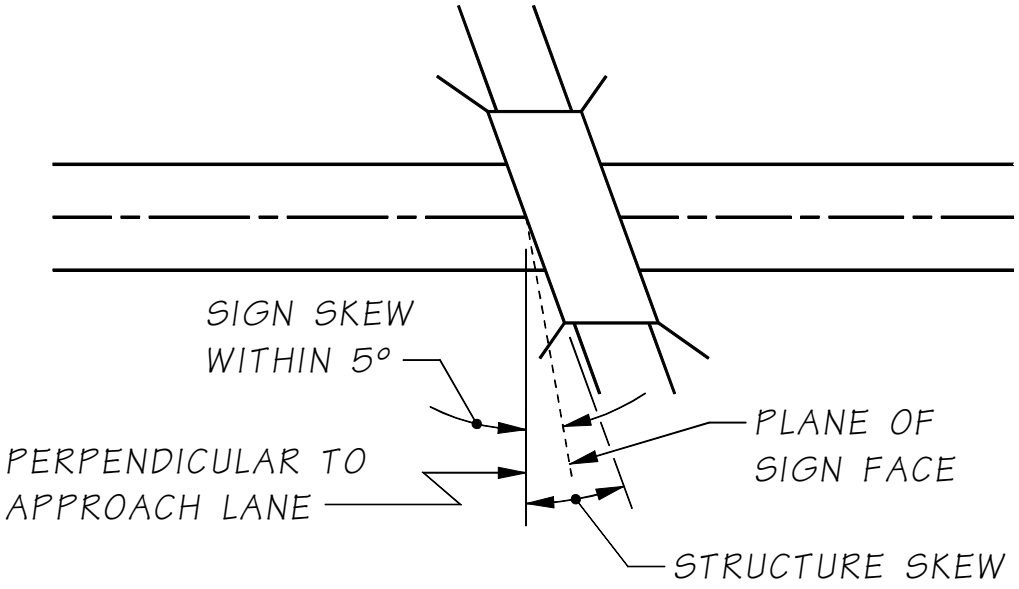

Sign Skew on Tangent Roadway
Figure 10.1.2-2

2. For structures located on or just beyond a horizontal curve of the lower roadway, signs shall be designed to provide a sign chord skew within 5° from perpendicular to the chord-point determined by the approach speed (see Figure 10.1.2-3).
3. The top of the sign shall be level.

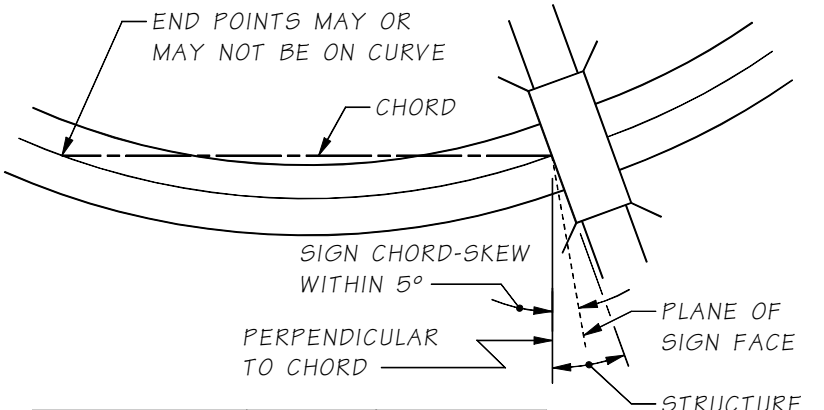

SPEED LIMIT	35 MPH OR LESS	MORE THAN 35 MPH
CHORD LENGTH	300'	500'

Sign Skew on Curved Roadway
Figure 10.1.2-3

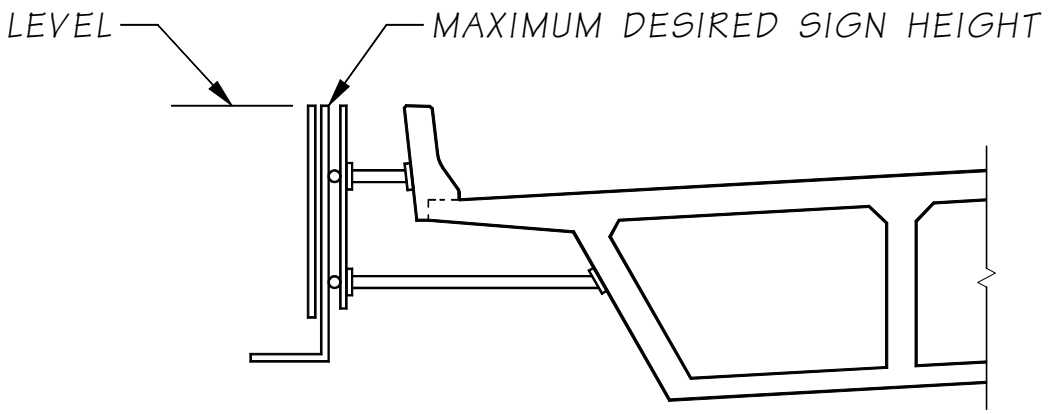

Figure 10.1.2-4

C. **Aesthetics**

1. When possible, the support structure should be hidden from view of traffic.
2. The sign support shall be detailed in such a manner that will permit the sign and lighting bracket to be installed level.
3. When the sign support will be exposed to view, special consideration is required in determining member sizes and connections to provide as pleasing an appearance as possible.

D. **Sign Placement**

1. When possible, the designer should avoid locating signs under bridge overhangs. This causes partial shading or partial exposure to the elements and problems in lifting the material into position and making the required connections. Signs shall never be placed directly under the drip-line of the structure. These conditions may result in uneven fading, discoloring, and difficulty in reading. When necessary to place a sign under a bridge due to structural or height requirements, the installation should be reviewed by the Region Traffic Design Office.
2. A minimum of 2″ of clearance shall be provided between back side of the sign support and edge of the structure. See Figure 10.1.2-5.

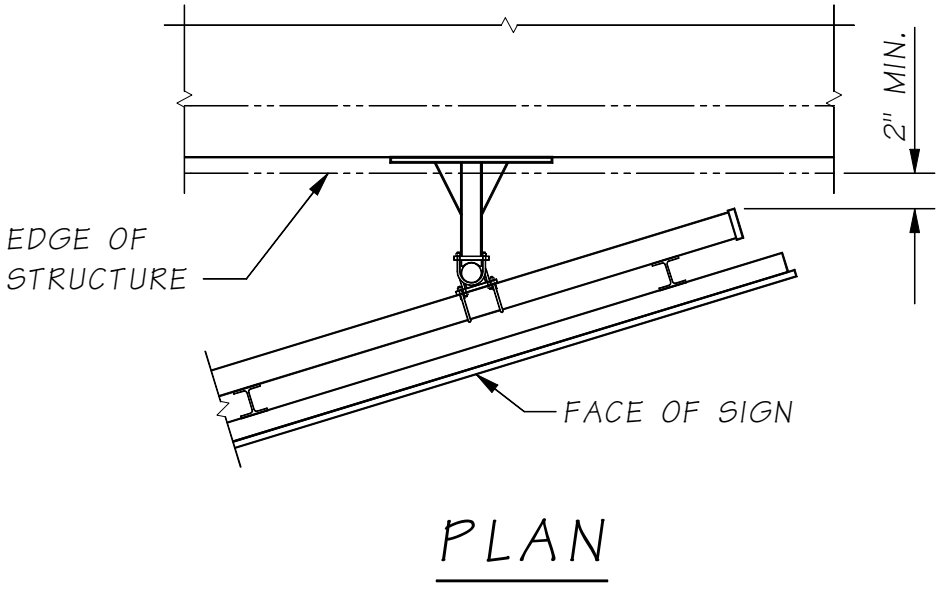

Sign Horizontal Location
Figure 10.1.2-5

E. **Installation**

1. Resin bonded anchors or cast-in-place ASTM A 307 anchor rods should be used to install the sign brackets on the structure. Size and minimum installation depth shall be given in the plans. The resin bonded anchors should be installed normal to the concrete surface. Resin bonded anchors shall not be placed through the webs or flanges of presstressed or post-tensioned girders unless approved by the WSDOT Bridge Design Engineer.
2. Bridge mounted sign structures shall not be placed on bridges with steel superstructures unless approved by the WSDOT Bridge Design Engineer.

10.1.3 Monotube Sign Structures Mounted on Bridges

A. **Design Loads –** Design loads for the supports of the Sign Bridges shall be calculated based on assuming a 12-foot-deep sign over the entire roadway width, under the sign bridge. This will account for any signs that may be added in the future. For Cantilever design loads, guidelines specified in Section 10.1.1 shall be followed. The design loads shall follow the same criteria as described in Section 10.1.1. Loads from the sign bridge shall be included in the design of the supporting bridge.

In cases where a sign structure is mounted on a bridge, the sign structure, from the anchor bolt group and above, shall be designed to AASHTO "Standard Specifications for Structural Supports for Highway Signs, Luminaires, and Traffic Signals," Fourth Edition, dated 2001 including interims. The concrete around the anchor bolt group and the connecting elements to the bridge structure shall be designed to the specifications in this manual and AASHTO LRFD Bridge Design Specifications. Loads from the sign structure design code shall be taken as unfactored loads for use in LFRD bridge design.

B. **Vertical Clearance –** Vertical clearance for Monotube Sign Structures shall be 20′-0″ minimum from the bottom of the lowest sign to the highest point in the traveled lanes. See Appendix 10.1-A1-1, 10.1-A2-1, and 10.1-A3-1 for sample locations of Minimum Vertical Clearances.

C. **Geometrics –** Sign structures shall be placed at approximate right angles to approaching motorists. Dimensions and details of sign structures are shown in the *Standard Plans* G-60.10, G-60.20, G-60.30, G-70.10, G-70.20, G-70.30 and Appendix 10.1-A1-1, 2, & 3 and 10.1-A2-1, 2, & 3. When maintenance walkways are included, refer to *Standard Plans* G-95.10, G-95.20, G-95.30.

10.1.4 Monotube Sign Structures

A. **Sign Bridge Standard Design –** Table 10.1.4-1 provides the standard structural design information to be used for a Sign Bridge Layout, Appendix 10.1-A1-1; along with the Structural Detail sheets, which are Appendix 10.1-A1-2 and Appendix 10.1-A1-3.

B. **Cantilever Standard Design –** Table 10.1.4-2 provides the standard structural design information to be used for a Cantilever Layout, Appendix 10.1-A2-1; along with the Structural Detail sheets, which are Appendix 10.1-A2-2 and Appendix 10.1-A2-3.

STANDARD MONOTUBE SIGN BRIDGES

SPAN LENGTH	POSTS Ⓥ				BEAM A Ⓥ				BEAM B Ⓥ				BEAM C Ⓥ				CAMBER
"S"	"H"	"A"	"B"	"T1"	"L1"	"B"	"C"	"T2"	"L2"	"B"	"C"	"T2"	"L3"	"B"	"C"	"T2"	
LESS THAN 60'-0"	30'-0" OR LESS	1'-6"	2'-0"	½"	6'-0"	2'-0"	2'-0"	⅜"	0'-0"	2'-0"	2'-0"	⅜"	13'-0" TO 48'-0"	2'-0"	2'-0"	⅜"	2¾"
60'-0" TO 75'-0"	30'-0" OR LESS	1'-6"	2'-3"	½"	6'-0"	2'-3"	2'-0"	⅜"	9'-0" TO 14'-0"	2'-3"	2'-0"	⅜"	30'-0" TO 35'-0"	2'-3"	2'-0"	⅜"	3¾"
+75'-0" TO 90'-0"	30'-0" OR LESS	1'-6"	2'-3"	⅝"	6'-0"	2'-3"	2'-0"	⅜"	14'-0" TO 19'-0"	2'-3"	2'-0"	⅜"	35'-0" TO 40'-0"	2'-3"	2'-0"	⅜"	5"
+90'-0" TO 105'-0"	30'-0" OR LESS	1'-9"	2'-6"	⅝"	6'-0"	2'-6"	2'-3"	½"	19'-0" TO 26'-6"	2'-6"	2'-3"	½"	40'-0"	2'-6"	2'-3"	½"	6"
+105'-0" TO 120'-0"	30'-0" OR LESS	1'-9"	2'-6"	⅝"	6'-0"	2'-6"	2'-3"	½"	16'-6" TO 34'-0"	2'-6"	2'-3"	½"	40'-0"	2'-6"	2'-3"	½"	7½"
+120'-0" TO 135'-0"	30'-0" OR LESS	2'-0"	2'-6"	⅝"	6'-0"	2'-6"	2'-6"	½"	34'-0" TO 41'-6"	2'-6"	2'-6"	½"	40'-0"	2'-6"	2'-6"	½"	8½"
+135'-0" TO 150'-0"	30'-0" OR LESS	2'-0"	2'-6"	⅝"	6'-0"	2'-6"	2'-6"	½"	41'-6" TO 49'-0"	2'-6"	2'-6"	½"	40'-0"	2'-6"	2'-6"	½"	10½"

SPAN LENGTH	POST BASE Ⓥ					BOLTED SPLICE #1 L1 TO L2 AND L1 TO L3						BOLTED SPLICE #2 L2 TO L3						MAXIMUM SIGN AREA
"S"	"D1"	"S5"	"S6"	"T3"	"T6"	"S1"	"S2"	"S3"	"S4"	"T4"	"T5"	"S1"	"S2"	"S3"	"S4"	"T4"	"T5"	
LESS THAN 60'-0"	1½"	4	4	2¼"	¾"	5	-	5	-	2"	⅝"	-	-	-	-	-	-	500 SQ. FT.
60'-0" TO 75'-0"	1¾"	4	4	2¼"	¾"	6	-	5	-	2"	⅝"	6	-	5	-	2¼"	¾"	600 SQ. FT.
+75'-0" TO 90'-0"	1¾"	4	4	2½"	¾"	6	-	5	-	2"	⅝"	6	-	5	-	2¼"	¾"	750 SQ. FT.
+90'-0" TO 105'-0"	1¾"	4	5	2½"	1"	7	-	6	-	2"	⅝"	7	5	6	4	2½"	1"	750 SQ. FT.
+105'-0" TO 120'-0"	1¾"	4	5	2½"	1"	7	-	6	-	2"	⅝"	7	5	6	4	2½"	1"	850 SQ. FT.
+120'-0" TO 135'-0"	2"	4	5	2½"	1"	7	-	7	-	2"	⅝"	7	5	7	5	2½"	1"	800 SQ. FT.
+135'-0" TO 150'-0"	2"	4	5	2½"	1"	7	-	7	-	2"	⅝"	7	5	7	5	2½"	1"	800 SQ. FT.

Ⓥ NOTE: DENOTES MAIN LOAD CARRYING TENSILE MEMBERS OR TENSION COMPONENTS OF FLEXURAL MEMBERS.

Table 10.1.4-1

STANDARD MONOTUBE CANTILEVERS

SPAN LENGTH	POSTS Ⓥ				BEAM A Ⓥ				BEAM B Ⓥ				CAMBER
"S"	"H"	"A"	"B"	"T1"	"L1"	"B"	"C"	"T2"	"L2"	"B"	"C"	"T2"	
LESS THAN 20'-0"	30'-0" OR LESS	1'-6"	2'-0"	⅜"	6'-0"	2'-0"	2'-0"	⅜"	14'-0"	2'-0"	2'-0"	⅜"	2"
20'-0" TO 30'-0"	30'-0" OR LESS	1'-6"	2'-0"	½"	6'-0"	2'-0"	2'-0"	⅜"	14'-0" TO 24'-0"	2'-0"	2'-0"	⅜"	3½"

SPAN LENGTH	POST BASE Ⓥ					BOLTED SPLICE						MAXIMUMS		
"S"	"D1"	"S5"	"S6"	"T3"	"T6"	"S1"	"S2"	"S3"	"S4"	"T4"	"T5"	SIGN AREA	"XYZ"	"Z"
LESS THAN 20'-0"	1½"	4	4	2"	¾"	5	-	5	-	2"	⅝"	168 SQ. FT.	2604 C.F.	15'-6"
20'-0" TO 30'-0"	2"	4	4	2"	¾"	5	3	5	3	2½"	⅝"	252 SQ. FT.	4410 C.F.	17'-6"

Ⓥ NOTE: DENOTES MAIN LOAD CARRYING TENSILE MEMBERS OR TENSION COMPONENTS OF FLEXURAL MEMBERS.

Table 10.1.4-2

C. **Balanced Cantilever Standard Design –**Appendix 10.1-A3-1; along with the Structural Detail sheets, Appendix 10.1-A3-2 and Appendix 10.1-A3-3, provides the standard structural design information to be used for a Balanced Cantilever Layout, Balanced Cantilevers are typically for VMS sign applications and shall have the sign dead load balanced with a maximum difference one third to two thirds distribution.

D. **Monotube Sheet Guidelines –** The following guidelines apply when using the Monotube Sign Structure Appendix 10.1-A1-1, 2, & 3, 10.1-A2-1, 2, & 3, 10.1-A3-1, 2, & 3, 10.1-A4-1, 2, & 3, and 10.1-A5-1.

1. Each sign structure shall be detailed and must specify:
   a. Sign structure base Elevation, Station and Number.
   b. Type of Foundation 1, 2, or 3 shall be used for the Monotube Sign Structures, unless a special design is required. The average Lateral Bearing Pressure for each foundation shall be noted on the Foundation sheet(s).
   c. If applicable, label the Elevation View “Looking Back on Stationing”.
2. Designers shall verify the cross-referenced page numbers and details are correct.

E. **Monotube Quantities –** Quantities for structural steel are given in Table 10.1.4-3.

Sign Structure Material Quantities										
ASTM A572 GR. 50 or ASTM 588	Cantilever			Sign Bridge						
	20' ≤	20' to 30'	Balanced	60' ≤	60' to 75'	75' to 90'	90' to 105'	105' to 120'	120' to 135'	135' to 150'
Post (plf)	99	132	132	132	144	176	204	204	215	215
Base PL (ea)	431	490	490	490	578	585	654	654	688	688
Beam, near Post (plf)	116	116	116	116	124	124	139	139	171	195
Span Beam (plf)	116	116	116	116	124	124	162	185	195	195
Corner Stiff. (ea set)	209	204	115	204	238	236	312	312	371	369
Splice Pl #1 (1pr)	482	482	482	482	692	692	892	883	780	780
Splice Pl #2 (1pr)	--	--	--	482	615	615	718	802	715	780
Brackets (ea)	60	60	60	60	65	65	69	69	70	70
6" Hand Hole (ea)	18	18	18	18	18	18	18	18	18	18
6" x 11" Hand Hole (ea)	30	30	30	30	30	30	30	30	30	30
Anchor Bolt PL (ea)	175	175	175	175	185	185	311	311	326	326
Seal Plates (1 bridge)	217	216	216	316	614	612	770	674	860	860

Sign Structure Steel Quantities
Table 10.1.4-3

10.1.5 Foundations

A. **Monotube Sign Bridge and Cantilever Sign Structure Foundation Types –** The Geotechnical Branch shall be consulted as to which foundation type is to be used. Standard foundation designs for standard plan truss-type sign structures are provided in WSDOT *Standard Plans* G-60.20 & G-60.30 and G-70.20 & G-70.30; and in Section 10.1.5 of this manual. The following paragraphs describe the four types of foundations detailed in this section.

1. The Foundation Type 1, a drilled shaft, is the preferred foundation type. The standard drilled shafts are designed for a lateral bearing pressure of 2,500 psf. See Appendix 10.1-A4-1 & 2 for Foundation Type 1 standard design information. The Geotech report for this foundation should include the soil friction angle and if temporary casing is required for shaft construction, in additional to the allowable lateral bearing pressures. When the Geotechnical engineer specifies temporary casing, it shall be clearly shown on shaft plans, for each required shaft.
2. The Foundation Type 2 is an alternate to Type 1 when drilled shafts are not suitable to the site. Foundation Type 2 is designed for a lateral bearing pressure of 2,500 psf. See Appendix 10.1-A4-3 for Foundation Type 2 standard design information.
3. The Foundation Type 3 replaces the foundation Type 2 for poor soil conditions where the lateral bearing pressure is between 2,500 psf and 1,500 psf. See Appendix 10.1-A4-3 for Type 3 Foundation standard design information.
4. Barrier Foundations are foundations that include a barrier in the top portion of Foundation Types 1, 2, & 3. Foundation details shall be modified to include Barrier Foundation details. Appendix 10.1-A5-1 details a single slope barrier.

B. **Luminaire, Signal Standard and Camera Pole Foundation Types** – Luminaire foundation options are shown on Standard Plan J-28.30. Signal Standard and Camera Pole foundation options are provided in the Plan Sheet Library, on the WSDOT Design Standards Home Page.

C. **Foundation Design –** Shaft type foundations constructed in soil for sign bridges, cantilever sign structures, luminaires, signal standards and strain poles are designed per the current edition of the AASHTO Standard Specifications For Highway Signs, Luminaires, and Traffic Signals; Section 13.10; Embedment of Lightly Loaded Small Poles And Posts. This design method assumes the presence of uniform soil properties with depth, including a single value for Allowable Lateral Bearing Pressure. For foundation locations with multiple soil layers within the anticipated foundation depth (and multiple values of allowable lateral bearing pressure), consideration should be given to using a single "weighted average" value of allowable lateral bearing pressure for design. For foundation locations where a soft soil (with low allowable lateral bearing pressures) is overlaid by a stronger soil (with higher allowable lateral bearing pressures), the foundation can be conservatively designed for the lower allowable lateral bearing pressure value. This design method accounts for the lateral loads applied to the foundation due to the soil pressure (increasing with depth) and the lateral loads applied from the structure above. An additional increase in lateral resistance should not be added for increasing soil lateral pressures with depth.

No provisions for foundation torsional capacity are provided in Section 10.13 of the AASHTO Standard Specifications For Highway Signs, Luminaires, and Traffic Signals. The following approach can be used to calculate torsional capacity of sign structure, luminaire, and signal standard foundations:

Torsional Capacity, T_u,

$$Tu = F*\tan\varphi D \qquad 10.1.5(1)$$

Where:

F = Total force normal to shaft surface (kip)
D = Diameter of shaft (ft)
φ = Soil friction angle (degree), use smallest for variable soils

1. Monotube Sign Bridge and Cantilever Sign Structures Foundation Type 1 Design:

   The standard embedment depth "Z", shown in the table on Appendix 10.1-A4-1, shall be used as a minimum embedment depth and shall be increased if the shaft is placed on a sloped surface, or if the allowable lateral bearing pressures are reduced from the standard 2500 psf. The standard depth assumed that the top 4 feet of the C.I.P. cap is not included in the lateral resistance (i.e., shaft depth "D" in the code mentioned above), but is included in the overturning length of the sign structure. Bridge Special Provisions 210201A1.GB8, 210501.GB8, and 210309F2.FB8 shall be included with all Foundation Type 1 shafts.

2. Monotube Sign Bridge and Cantilever Structures Foundation Type 2 & 3:

   These foundation designs are standards and shall not be adjusted or redesigned. They are used in conditions where a Foundation Type 1 (shaft) would be impractical due to difficult drilling or construction and when the Geotechnical Engineer specifies their use. The concept is that the foundation excavation would maintain a vertical face in the shape of the Foundation Type 2 or 3. Contractors often request to over-excavate and backfill the hole, after formwork has been used to construct this foundation type. This is only allowed with the Geotechnical engineer's approval, if the forming material is completely removed, and if the backfill material is either CDF or concrete class 3000 or better.

3. Monotube Sign Bridge and Cantilever Structures Special Design Foundations:

   The Geotechnical Engineer will identify conditions where the foundation types (1, 2, or 3) will not work. In this case, the design forces are calculated, using the AASHTO Standard Specifications for Structural Supports for Highway Signs, Luminaires, and traffic Signals, and applied at the bottom of the structure base plate. These forces are then considered service loads and the special design foundation is designed with the appropriate Service, Strength, and Extreme Load Combination Limit States and current design practices of the AASHTO LRFD Bridge Design Specifications and this manual. Some examples of these foundations are spread footings, columns and shafts that extend above ground adjacent to retaining walls, or connections to traffic barriers on bridges. The anchor rod array shall be used from Tables 10.1.4-1 and 10.1.4-2 of this manual and shall be long enough to develop the rods into the confined concrete core of the foundation. The rod length and the reinforcement for concrete confinement, shown in the top four feet of the Foundation Type 1, shall be used as a minimum.

4. Signal Foundation Design:

   Bridge Special Provisions 20021.GB8, 20051.GB8, and 20034041.FB8 shall be included with these foundation designs when specified by the Geotechnical engineer.

D. **Foundation Quantities**

1. Barrier quantities are approximate and can be used for all Foundation Types:

   Class 4000 Concrete 7.15 CY (over shaft foundation)
   Grade 60 rebar 372 lbs

2. Miscellaneous steel quantities (anchor rods, anchor plate, and template) for all Monotube Sign Structure foundation types are listed below (per foundation). Quantities vary with span lengths as shown.

   60 feet & under = 1,002 pounds
   61 feet to 90 feet = 1,401 pounds
   91 feet to 120 feet = 1,503 pounds
   121 feet to 150 feet: Barrier mounted sign bridge not recommended for these spans.

3. Monotube Sign Bridge and Cantilever Sign Structure Type 1-3 Foundation quantities for concrete, rebar and excavation are given in Table 10.1.5-1. For Sign Bridges, the quantities shown below are for one foundation and there are two foundations per Sign Bridge. If the depth "Z" shown in the table on Appendix 10.1-A4-1 is increased, these values should be recalculated.

Sign Structure Foundation Material Quantities						
	Cantilever Signs		Sign Bridges			
Concrete Cl. 4000 (cu. yard)	20′ & Under	20′ –30′	60′ & Under	60′ – 90′	90′ – 120′	120′ – 150′
Type 1	6.3	7.5	7.7	9.4	10.6	11.4
Type 2	8.0	10.5	10.0	12.2	14.1	15.0
Type 3	11.1	14.1	13.0	16.1	18.6	20.0
Rebar Gr. 60 Pounds						
Type 1	685	1,027	1,168	2,251	3,256	4,255
Type 2	772	1,233	1,190	1,724	2,385	2,838
Type 3	917	1,509	1,421	2,136	2,946	3,572
Excavation (cu. yard)						
Type 1	9.8	10.9	10.9	12.8	14.1	14.9
Type 2	20.7	25.7	24.6	29.0	32.9	34.6
Type 3	29.0	34.6	32.9	39.0	44.0	47.8

Table 10.1.5-1

10.1.6 Truss Sign Bridges: Foundation Sheet Design Guidelines

If a Truss sign structure is used, refer to WSDOT *Standard Plans* for foundation details. There are four items that should be addressed when using the WSDOT *Standard Plans*, which are outlined below. For details for F-shape barrier details not shown in *Standard Plans* contact Bridge Office to access archived Bridge Office details.

1. Determine conduit needs. If none exist, delete all references to conduit. If conduit is required, verify with the Region as to size and quantity.
2. Show sign bridge base elevation, number, dimension and station.
3. Transition section shall be per *Standard Plans*.
4. The quantities shall be based on the *Standard Plans* details as needed.

10.2 Bridge Traffic Barriers

10.2.1 General Guidelines

The design criteria for traffic barriers on structures shall be in accordance with Chapter 13 of the LRFD Bridge Design Specifications adopted by AASHTO. The following guidelines supplement the requirements in AASHTO.

The WSDOT Bridge and Structures standard for new traffic barriers on structures is a 32″ high F-Shape concrete barrier. It shall be used on all interstates, major highway routes, and over National Highway System (NHS) routes unless special conditions apply.

It shall be the Bridge and Structures Office policy to design traffic barriers for new structures using the Test Level 4 (TL-4) design criteria regardless of the height of the barrier safety shape (e.g. 2′-8″, 2′-10″, or 3′-6″). Loads shall be applied at the top of the barrier safety shape. General notes for traffic barriers on structures shall include the test level of the barrier.

Use of a Single Slope concrete bridge traffic barrier shall be limited to locations where there is Single Slope concrete barrier on the approach grade to a bridge or for continuity within a corridor.

A Test Level 5 (TL-5) traffic barrier shall be used on new structures under the following conditions:

- “T” intersections on a structure.
- Barriers on structures with a radius of curvature less than 500ft, greater than 10% Average Daily Truck Traffic (ADTT), and where approach speeds are 50mph or greater (e.g. freeway off-ramps). TL-4 is adequate for the barrier on the inside of the curve.

See Chapter 13 of the AASHTO LRFD Bridge Design Specifications for additional Test Level selection criteria.

A list of crash tested barriers can be found through the FHWA website at:
http://safety.fhwa.dot.gov/roadway_dept/policy_guide/road_hardware/barriers/bridgerailings/index.cfm

10.2.2 Bridge Railing Test Levels

It must be recognized that bridge traffic barrier performance needs differ greatly from site to site. Barrier designs and costs should match facility needs. This concept is embodied in the AASHTO LRFD Bridge Design Specifications. Six different bridge railing test levels, TL-1 thru TL-6, and associated crash test/performance requirements are given in Chapter 13 of these design specifications along with guidance for determining the appropriate test level for a given bridge.

10.2.3 Available WSDOT Designs

A. **Service Level 1 (SL-1) Weak Post Guardrail (TL-2) –** This bridge traffic barrier is a crash tested weak post rail system. It was developed by Southwest Research Institute and reported in NCHRP Report 239 for low-volume rural roadways with little accident history. We have utilized this design on some of our short concrete spans and on our timber bridges. A failure mechanism is built into this rail system such that upon a 2 kip applied impact load the post will break away from the mounting bracket. The thrie beam guardrail will contain the vehicle by virtue of its ribbon strength. This failure mechanism assures minimal or no damage to the bridge deck and stringers. The appropriate guardrail approach transition shall be a Case 14 placement as shown on WSDOT Standard Plan C-2h. For complete details see Appendix 10.4-A1.

B. **Texas T-411 Aesthetic Concrete Baluster (TL-2) –** Texas developed this standard for a section of highway that was considered to be a historic landmark. The existing deficient concrete baluster rail was replaced with a much stronger concrete baluster that satisfactorily passed the crash test performance criteria set forth by the NCHRP Report 230. For details visit TXDOT's Bridge and Structures website at: www.txdot.gov/contact_us/bridge.htm

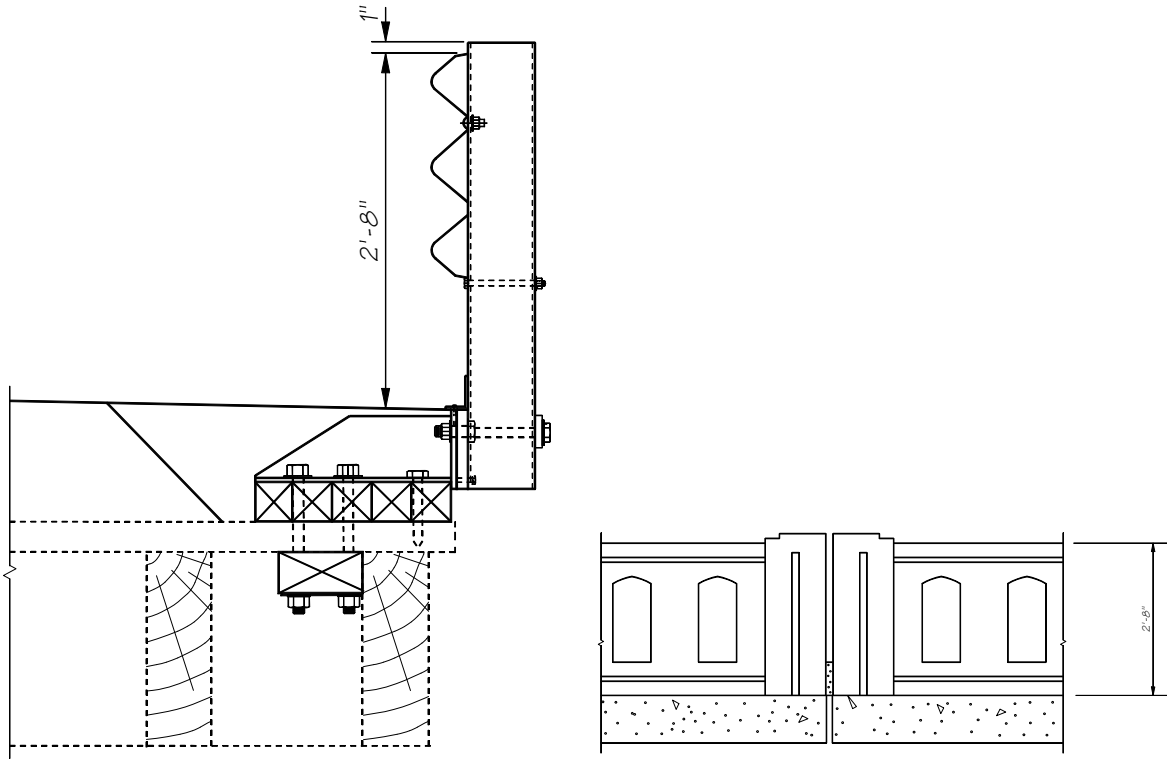

SL-1 Weak Post Texas T-411

Figure 10.2.3-1

C. **Traffic Barrier – 32″ Shape F (TL-4) –** This configuration was crash tested in the late 1960's, along with the New Jersey Shape, under NCHRP 230 and again at this test level under NCHRP 350. The steeper vertical shape tested better than the New Jersey face and had less of an inclination to roll vehicles over upon impact. The 3″ toe of the traffic barrier is the maximum depth that an ACP or HMA overlay can be placed. For complete details see Appendix 10.2-A1 & A2.

D. **Traffic Barrier – 34″ Single Slope (TL-4) –** This concrete traffic barrier system was designed by the state of California in the 1990's to speed up construction by using the "slip forming" method of construction. It was tested under NCHRP 350. WSDOT has increased the height from 32″ to 34″ to match the approach traffic barrier height and to allow the placement of one HMA overlay. Due to inherent problems with the "slip forming" method of traffic barrier construction WSDOT has increased the concrete cover on the traffic side from 1½″ to 2½″. For complete details see Appendix 10.2-A3.

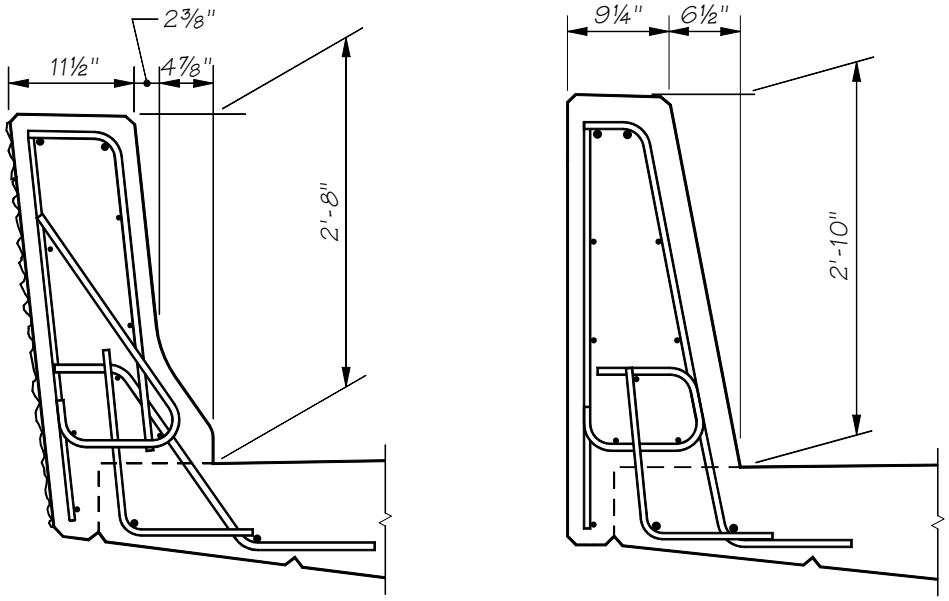

32″ F-Shape **34″ Single Slope**

Figure 10.2.3-2

E. **Pedestrian Barrier (TL-4) –** This crash tested rail system offers a simple to build concrete alternative to the New Jersey and F-Shape configurations. This system was crash tested under both NCHRP 230 and 350. Since the traffic face geometry is better for pedestrians and bicyclists, WSDOT uses this system primarily in conjunction with a sidewalk. For complete details see Appendix 10.2-A4.

F. **Oregon 2-Tube Curb Mounted Traffic Barrier (TL-4) –** This is another crash tested traffic barrier that offers a lightweight, see-through option. This system was crash tested under both NCHRP 230 and 350. A rigid thrie beam guardrail transition is required at the bridge ends. For details, see the Oregon Bridge and Structure website at: http://egov.oregon.gov/odot/hwy/engservices/bridge_drawings.shtml#bridge_200___bridge_rails.

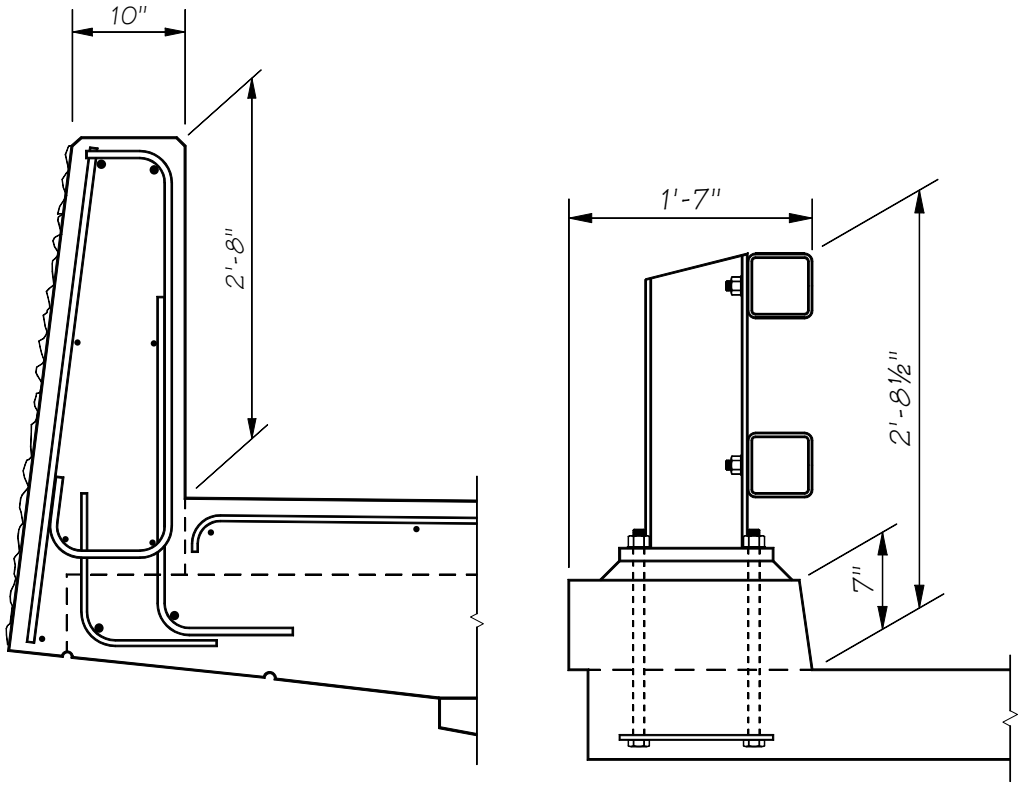

Figure 10.2.3-3

G. **Traffic Barrier – 42″ Shape F (TL-4 and TL-5) –** This barrier is very similar to the 32″ F-shape concrete barrier in that the slope of the front surface is the same except for height. For complete details see Appendix 10.2-A5.

H. **Traffic Barrier – 42″ Single Slope (TL-4 and TL-5) –** This option offers a simple to build alternative to the Shape F configuration. For complete details see Appendix 10.2-A6.

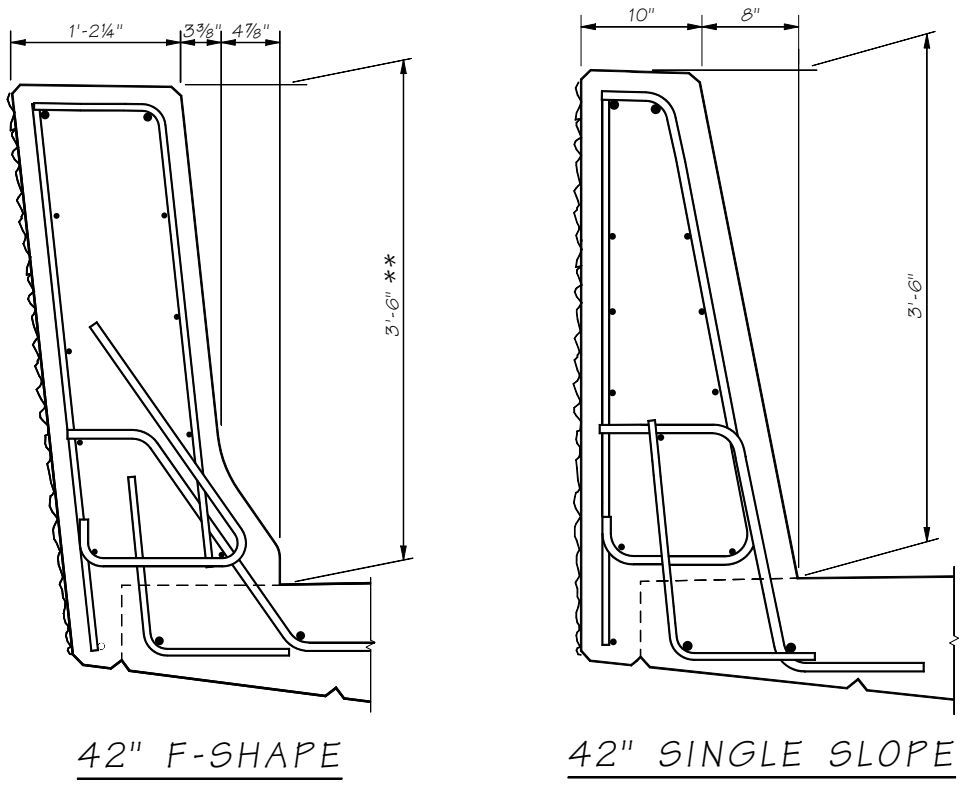

42″ F-Shape **42″ Single Slope**

Figure 10.2.3-4

10.2.4 Design Criteria

A. **Design Values –** AASHTO LRFD Appendix A13 shall be used to design bridge traffic barriers and their supporting elements (i.e. the deck).

Concrete traffic barriers shall be designed using yield line analysis as described in AASHTO LRFD A13.3.1. WSDOT Standard F Shape and Single Slope barriers meet these requirements.

Deck overhangs supporting traffic barriers shall be designed per AASHTO LRFD A13.4. For concrete traffic barriers in Design Case 1, AASHTO requires M_S, the deck overhang flexural resistance, to be greater than M_c of the concrete traffic barrier base. This requirement is consistent with yield line analysis (see AASHTO LRFD CA13.3.1), but results in overconservative deck overhang designs.

In order to prevent this unnecessary overdesign of the deck overhang, the nominal traffic barrier resistance to transverse load R_W (AASHTO LRFD Bridge Design Specifications A13.3.1) transferred from the traffic barrier to deck overhang shall not exceed 120% of the design force F_t (AASHTO LFRD Table A13.2-1) required for a traffic barrier.

The deck overhang shall be designed in accordance with the requirements of AASHTO LRFD A13.4.2 to provide a flexural resistance M_s, acting coincident with the tensile force T. At the inside face of the barrier M_s may be taken as:

for an interior barrier segment - $M_s = \frac{R_w \cdot H}{L_C + 2 \cdot H}$

and for an end barrier segment - $M_s = \frac{R_w \cdot H}{L_C + H}$

However, M_s need not be taken greater than M_c at the base. T shall be taken as:

for an interior barrier segment - $T = \frac{R_w}{L_C + 2 \cdot H}$

and for an end barrier segment - $T = \frac{R_w}{L_C + H}$

The end segment requirement may be waived if continuity between adjacent barriers is provided.

When an HMA overlay is required for initial construction, increase the weight for Shape F traffic barrier. See Section 10.2.4.C for details.

B. **Geometry –** The traffic face geometry is part of the crash test and shall not be modified. Contact the WSDOT Bridge and Structure Office Traffic Barrier Specialist for further guidance.

Thickening of the traffic barrier is permissible for architectural reasons. Concrete clear cover must meet minimum concrete cover requirements but can be increased to accommodate rustication grooves or patterns.

C. **Standard Detail Sheet Modifications –** When designing and detailing a bridge traffic barrier on a superelevated bridge deck the following guidelines shall be used:

- For bridge decks with a superelevation of 8% or less, the traffic barriers (and the median barrier, if any) shall be oriented perpendicular to the bridge deck.
- For bridge decks with a superelevation of more than 8%, the traffic barrier on the low side of the bridge (and median barrier, if any) shall be oriented perpendicular to an 8% superelevated bridge deck. For this situation, the traffic barrier on the high side of the bridge shall be oriented perpendicular to the bridge deck.

The standard detail sheets are generic and may need to be modified for each project. The permissible modifications are:

- Removal of the electrical conduit, junction box, and deflection fitting details.
- Removal of design notes.
- If the traffic barrier does not continue on to a wall, remove W1 and W2 rebar references.
- Removal of the non-applicable guardrail end connection details and verbiage.
- If guardrail is attached to the traffic barrier use either the thrie beam design “F” detail or the W-beam design “F” detail.

If the traffic barrier continues off the bridge, approach slab, or wall, remove the following:

- Guardrail details from all sheets.
- Conduit end flare detail.
- Modified end section detail and R1A or R2A rebar details from all sheets.
- End section bevel.
- Increase the 3″ toe dimension of the Shape F traffic barriers up to 6″ to accommodate HMA overlays.

Barrier Impact Design Forces on Traffic Barrier & Deck Overhang									
Parameters		Type F 32 in.		Single Slope 34 in.		Type F 42 in.		Single Slope 42 in.	
		Interior	End*	Interior	End*	Interior	End*	Interior	End*
Traffic Barrier Design	Average M_c (ft-kips/ft)	20.62	20.62	19.39	19.39	29.18	29.18	25.22	25.22
	M_c at Base (ft-kips/ft)	27.24	27.24	26.11	26.11	37.00	37.00	34.52	34.52
	M_w (ft-kips)	42.48	45.98	44.72	42.17	97.83	96.91	83.87	79.14
	L_c (ft)	8.61	4.75	9.19	4.79	14.48	9.26	14.45	9.19
	R_w (kips)	133.09	73.48	125.79	65.53	241.47	154.33	208.16	132.49
	F_t (kips)	54.00	54.00	54.00	54.00	124.00	124.00	124.00	124.00
Deck Overhang Design	$1.2*F_t$ (kips)	64.80	64.80	64.80	64.80	148.80	148.80	148.80	148.80
	Design R_w (kips)	64.80	64.80	64.80	64.80	148.80	148.80	148.80	132.49
	$R_w*H/(L_c+aH)$ (ft-kips/ft)**	12.40	23.29	12.36	24.09	24.24	40.83	24.28	36.53
	Design M_s (ft-kips/ft)	12.40	23.29	12.36	24.09	24.24	37.00	24.28	34.52
	Design T (kips/ft)	4.65	8.74	4.36	8.50	6.93	11.67	6.94	10.44
Deck to Barrier Reinforcement	A_s required (in^2/ft)	0.29	0.56	0.29	0.58	0.44	0.68	0.50	0.72
	A_s provided (in^2/ft)	0.41	0.62	0.41	0.62	0.66	0.75	0.66	0.75
	S_1 Bars	#5 @ 9 in	#5 @ 6 in	#5 @ 9 in	#5 @ 6 in	#6 @ 8 in	#6 @ 7 in	#6 @ 8 in	#6 @ 7 in

*Traffic barrier cross sectional dimensions and reinforcement used for calculation of end segment parameters are the same as interior segments. Parameters for modified end segments shall be calculated per AASHTO-LRFD article A13.3, A13.4, and the WSDOT BDM/

**a = 1 for an end segment and 2 for an interior segment

Loads are based on vehicle impact only. For deck overhang design, the designer must also check other limit states per LRFD A13.4.1.

f_v = 60 ksi

f'_c = 4 ksi

Table 10.2.4-1

D. **Miscellaneous Design Information**

- Show the back of Pavement Seat in the "Plan – Traffic Barrier" detail.
- At roadway expansion joints, show traffic barrier joints normal to centerline except as shown on sheets in Chapter 9 Appendix 9.1-A1-1 and A2-1.
- When an overlay is required the 2′-8″ minimum dimension shown in the "Typical Section – Traffic Barrier" shall be referenced to the top of the overlay.
- When bridge lighting is part of the contract include the lighting bracket anchorage detail sheet.
- Approximate quantities for the Traffic barrier sheets are:

Barrier Type	Concrete Weight (lb/ft)	Steel Weight (lb/ft)
32″ F-shape (3″ toe)	455	18.6
32″ F-shape (6″ toe)	510	19.1
34″ Single Slope	490	16.1
42″ F-shape (3″ toe)	710	25.8
42″ F-shape (6″ toe)	765	28.4
42″ Single Slope	670	22.9
32″ Pedestrian	640*	14.7
Using concrete class 4000 with a unit weight of 155 lb/ft3 *with 6″ sidewalk, will vary with sidewalk thickness		

- Steel Reinforcement Bars:

  S_1 & S_2 or S_3 & S_4 and W_1 & W_2 bars (if used) shall be included in the Bar List. S_1, S_3, and W_1 bars shall be epoxy coated.

10.3 At Grade Traffic Barriers

10.3.1 Median Barriers

The top of the median traffic barrier shall have a minimum width of 6″. If a luminaire or sign is to be mounted on top of the median traffic barrier, then the width shall be increased to accommodate the mounting plate and 6″ of clear distance on each side of the luminaire or sign pole. The transition flare rate shall follow the WSDOT *Design Manual* M 22-01.

A. **Differential Grade Median Barriers –** Barriers at grade are sometimes required in median areas with different roadway elevations on each side. The standard Single Slope barrier s can be used for a grade difference up to 10″ for a 2′-10″ safety shape and up to 6″ for a 3′-6″ safety shape. See WSDOT Standard Plans C-13 and C-14a for details.

If the difference in grade elevations is 4′-0″ or less, then the barrier shall be designed using AASHTO LFD barrier loading with the following requirements:

1. The differential grade traffic barrier shall be designed to 10 kips, as a minimum loading.
2. For soil loads without traffic impact, the barrier shall be designed as a combination of a standard retaining wall (barrier weight resists overturning and sliding) and a cantilever retaining wall (passive soil resistance resists overturning and sliding) using the factors of safety for retaining walls found in this manual. Earthquake Group VII loads need not be considered.
3. Traffic impact loads shall be added to the side of the barrier retaining soil.
4. For soil loads with traffic impact, the barrier shall be designed as a combination of a standard retaining wall (barrier weight resists overturning and sliding) and a cantilever retaining wall (passive soil resistance resists overturning and sliding). The design shall be based on stability requirements for overturning with a factor of safety $M_R/M_O \geq 1.3$ and sliding $F_R/F_S \geq 1.3$.
5. To meet the stability requirements of item 4, several feet of barrier length are required. The length of the barrier required for stability shall be no more than 10 times the overall height. The barrier shall be designed for lateral bending over this length assuming it acts as a beam on an elastic foundation for this length with a 10K point load. The barrier shall also be designed for torsion from the moment induced by the 10K load about the barrier c.g.
6. A special impact analysis shall be performed at the barrier ends if the barrier terminates without being connected to a rigid object or dowelled to another barrier. Differential barrier deflection from traffic impact may cause a vehicle to “snag” on the undeflected barrier. The barrier depth may need to be increased at the end to prevent this deflection.
7. The differential grade traffic barrier shall have dummy joints at 8 to 12 foot centers based on project requirements.
8. Full depth expansion joints with shear dowels at the top will be required at intervals based on analysis but not to exceed a 120′-0″ maximum spacing.

Median traffic barriers with a grade difference greater that 4′-0″ shall be designed as standard plan retaining walls with a traffic barrier at the top and a barrier shape at the cut face.

10.3.2 Shoulder Barriers

At grade CIP shoulder barriers are sometimes used adjacent to bridge sidewalk barriers in lieu of standard precast Type 2 barriers. This barrier cross section has an equivalent mass and resisting moment for stability as the embedded double-face New Jersey Traffic Barrier which has been satisfactorily crash tested. A wire rope and pin connection shall be made at the bridge barrier end section per Standard Plan C-8. If a connection is made to an existing traffic barrier or parapet on the bridge, 15-inch long holes shall be drilled for the wire rope connection and shall be filled with an epoxy bonding agent.

10.3.3 Traffic Barrier Moment Slab

A. General Guidelines – Traffic barrier moment slabs that are placed on structural earth (SE) walls are part of the proprietary wall designed and shall be design by the SE wall manufacturers unless a traffic barrier moment slab design is provided in the contract plans. The SE wall manufacturers shall design the traffic barrier moment slabs in accordance with AASHTO LRFD and the WSDOT *Bridge Design Manual*.

B. **Design Guidelines –** The traffic barrier moment slab system for non-propriety walls, Geosynthetic, and for at-grade applications shall be designed in accordance with AASHTO LRFD Section 11.10.10.2 and Section 13. The design requirements are as follows:

1. Parapets and traffic barriers shall satisfy crash testing requirements as specified in Section 13. The traffic barrier portion of the moment slab shall be designed by the yield line method of analysis with the assumption that the barrier is mounted on a rigid surface or use a crash tested barrier. Traffic barrier to slab connection shall be designed with the requirement of Strength Limit State with a minimum transverse force of $1.2F_T$ as specified in AASHTO LRFD Table A13.2-1.

2. The moment slab shall be strong enough to resist the ultimate strength of the standard traffic barrier parapet.

3. The traffic barrier moment slab system shall be designed to the Extreme Event-II limit state and use Test Level 4 as a minimum loading. The yield line analysis of LRFD A13.3.1 is NOT applicable to traffic barrier moment slab system. The system shall be analyzed as beam on elastic foundation to determine the length of barrier resisting the collision force and designed to resist overturning moments, sliding, and bearing capacity by their own mass plus the mass of the soil and pavement above the anchoring slab. The traffic barrier moment slab system shall not directly transmit loads to the top of the wall facing panels.

   a. The traffic barrier shall have dummy joints at 8 to 12 foot centers base on project requirements of wall panel widths. Full depth expansion joints with shear pins or dowels will be required at the minimum intervals based on the stability analysis with a 120′-0″ maximum spacing.

4. The generic Extreme Event-II limit state soil parameters for structural fill under ultimate failure conditions are as follows:

   - Extreme Event soil total horizontal shear resistance: Q_R = 1 KSF
   - Extreme Event soil bearing resistance: q_{ult} = 2 KSF

   These values may be used to extract soil spring coefficients in longitudinal, transverse, and vertical directions for moment slab barriers on structural earth wall systems or at grade applications. The Geotechnical Engineer may provide alternate values in the geotechnical report.

10.3.4 Precast Traffic Barrier

A. **Concrete Barrier Type 2 –** "Concrete Barrier Type 2" (see WSDOT Standard Plan C-8) may be used on bridges for median applications or for temporary traffic control based on the following guidelines:

1. For temporary applications, no anchorage is required if there is 2 feet or greater slide distance between the back of the traffic barrier and an object and 3 feet or greater to the edge of the bridge deck or a severe drop off (see WSDOT *Design Manual* M 22-01).
2. For permanent applications in the median, no anchorage will be required if there is 2 feet or greater slide distance between the traffic barrier and the traffic lane.
3. For temporary applications, the traffic barrier shall not be placed closer than 9 inches or 6 inches to the edge of a bridge deck or substantial drop-off and shall be anchored (see WSDOT Standard Plans K-80.35 and K-80.37).
4. The traffic barrier shall not be used to retain soil that is sloped or greater than the barrier height or soil that supports a traffic surcharge.

B. **Concrete Barrier Type 4 and Alternative Temporary Concrete Barrier –** "Concrete Barrier Type 4 (see the WSDOT Standard Plan C-8a), is not a free standing traffic barrier. This barrier shall be placed against a rigid vertical surface that is at least as tall as the traffic barrier. In addition, Alternative Temporary Concrete Barrier Type 4 – Narrow Base (WSDOT Standard Plan K-80.30) shall be anchored to the bridge deck as shown in WSDOT Standard Plan K-80.37. The "Concrete Barrier Type 4 and Alternative Temporary Concrete Barrier" are not designed for soil retention.

10.4 Bridge Traffic Barrier Rehabilitation

10.4.1 Policy

The bridge traffic barrier retrofit policy is: "to systematically improve or replace existing deficient rails within the limits of roadway resurfacing projects." This is accomplished by:

- Utilizing an approved crash tested rail system that is appropriate for the site or
- Designing a traffic barrier system to the strength requirements set forth by Section 2 of AASHTO Standard Specifications for Highway Bridges, 17th edition."

10.4.2 Guidelines

A strength and geometric review is required for all bridge rail rehabilitation projects. If the strength of the existing bridge rail is unable to resist an impact of 10 kips or has not been crash tested, then modifications or replacement will be required to improve its redirectional characteristics and strength. Bridges that have deficient bridge traffic barriers were designed to older codes. The AASHTO LFD load of 10 kips shall be used in the retrofit of existing traffic barrier systems constructed prior to the year 2000. The use of the AASHTO LRFD criteria to design traffic barrier rehabs will result in a bridge deck that has insufficient reinforcement to resist moment from a traffic barrier impact load and will increase the retrofit cost due to expensive deck modifications.

10.4.3 Design Criteria

Standard thrie beam guardrail post spacing is 6′- 3″ except for the SL-1 Weak Post, which is at 8′-4″. Post spacing can be increased up to 10′- 0″ if the thrie beam guardrail is nested (doubled up).

Gaps in the guardrail are not allowed because they produce snagging hazards. The exceptions to this are:

- Movable bridges at the expansion joints of the movable sections.
- At traffic gates and drop down net barriers.
- At stairways.

Design F guardrail end sections will be used at the approach and trailing end of these gaps.

For Bridge Traffic Barrier Rehabilitation the following information will be needed from the Region Design office:

- Bridge Site Data Rehabilitation Sheet – WSDOT Form 235-002A.
- Photos, preferably digital Jpegs.
- Layout with existing dimensions.
- Standard Plan thrie beam guardrail transitions (selected by Region Design office) to be used at each corner of the bridge (contact bridges and structures office for thrie beam height).
- Location of any existing utilities.
- Measurements of existing ACP to top of curb at the four corners, midpoints and the locations of minimum and maximum difference (5 locations each side as a minimum).
- Diagram of the location of Type 3 anchors, if present, including a plan view with vertical and horizontal dimensions of the location of the Type 3 anchor connection relative to the intersecting point of the back of pavement seat with the curb line.
- The proposed overlay type, quantities of removal and placement.
- For timber bridges, the field measurement of the distance from the edge of bridge deck to the first and second stringer is required for mounting plate design.

Placement of the retrofit system will be determined from the WSDOT *Design Manual* M 22-01. Exceptions to this are bridges with sidewalk strength problems, pedestrian access issues, or vehicle snagging problems.

10.4.4 WSDOT Bridge Inventory of Bridge Rails

The WSDOT Bridge Preservation office maintains an inventory of all bridges in the state on the State of Washington Inventory of Bridges.

Concrete balusters are deficient for current lateral load capacity requirements. They have approximately 3 kips of capacity whereas 10 kips is required.

The combination high-base concrete parapet and metal rail may or may not be considered adequate depending upon the rail type. The metal rail Type R, S, and SB attached to the top of the high-base parapet are considered capable of resisting the required 5 kips of lateral load. Types 3, 1B, and 3A are considered inadequate. See the WSDOT *Design Manual* for replacement criteria.

10.4.5 Available Retrofit Designs

A. **Washington Thrie Beam Retrofit of Concrete Balusters –** This system consists of thrie beam guardrail stiffening of existing concrete baluster rails with timber blockouts. The Southwest Research Institute conducted full-scale crash tests of this retrofit in 1987. Results of the tests were satisfactory and complied with criteria for a Test Level 2 (TL2) category in the Guide Specifications. For complete details see Appendix 10.4-A1-1.

B. **New York Thrie Beam Guardrail –** This crash tested rail system can be utilized at the top of a raised concrete sidewalk to separate pedestrian traffic from the vehicular traffic or can be mounted directly to the top of the concrete deck. For complete details see Thrie Beam Retrofit Concrete Curb in Appendix 10.4-A1-3.

C. **Concrete Parapet Retrofit –** This is similar to the New York system. For complete details see Appendix 10.4-A1-2.

D. **SL-1 Weak Post –** This design has been utilized on some short concrete spans and timber bridges. A failure mechanism is built into this rail system so that upon impact with a 2 kip load the post will break away from the mounting bracket without damaging the bridge deck. The thrie beam guardrail will contain the vehicle by virtue of its ribbon strength. This failure mechanism assures minimal damage to the bridge deck and stringers. For complete details see Appendix 10.4-A1-4.

10.4.6 Available Replacement Designs

A. **Traffic Barrier – Shape F Retrofit –** This is WSDOT's preferred replacement of deficient traffic barriers and parapets on high volume highways with a large truck percentage. All interstate highway bridges shall use this type of barrier unless special conditions apply. For complete details see Appendix 10.4-A2.

10.5 Bridge Railing

10.5.1 Design

WSDOT pedestrian and bike/pedestrian railings are designed in accordance with Chapter 13 in the AASHTO LRFD Bridge Design Specifications. The AASHTO LRFD Bridge Design Specifications calls for a minimum of 42″ for bicycle railings whereas WSDOT requires a minimum height of 54″ on structures.

10.5.2 Railing Types

A. **Bridge Railing Type Pedestrian –** This pedestrian railing is designed to sit on top of the 32″ and 34″ traffic barriers and to meet pedestrian height requirements of 42″. For complete details see Appendix 10.5-A1.

B. **Bridge Railing Type BP and S-BP –** These railings are designed to meet WSDOT's minimum bicycle height requirements of 54″, and sit on top of the 32″ and 34″ traffic barriers.

   There are two versions – the BP and S-BP. The BP is the standard railing and is made out of aluminum. The S-BP is the steel version designed for use in rural areas because of aluminum theft. For complete details see Appendix 10.5-A2 and A3.

C. **Pedestrian Railing –** This railing is designed to sit on top of a six-inch curb on the exterior of a bridge sidewalk. It meets the bicycle height requirements of 54″. For complete details see Appendix 10.5-A4.

D. **Bridge Railing Type Chain Link Snow Fence –** This is designed to minimize plowed snow from falling off the bridge on to traffic below. For complete details see Appendix 10.5-A5.

E. **Bridge Railing Type Chain Link Fence –** This is designed to minimize the amount of objects falling off the bridge on to traffic below.

10.6 Bridge Approach Slabs

Bridge approaches typically experience two types of settlement, global and local. Global settlement is consolidation of the deeper natural foundation soils. Local settlement is mainly compression of fill materials directly beneath the approach pavement due to construction. The combination of global and local settlements adjacent to the bridge end piers form the characteristic "bump" in the pavement at the bridge. The approach slab significantly reduces local settlement and will provide a transition to the long term roadway differential settlements. Generally, abutments with a deep foundation will have greater differential roadway settlements than spread footing foundations.

When are Approach Slabs Required? – Bridge approach slabs are required for all new and widened bridges, except when concurrence is reached between the Geotechnical Branch, the Region Design Project Engineer Office, and the Bridge and Structures Office, that approach slabs are not appropriate for a particular site. In accordance with WSDOT *Design Manual*, the State Geotechnical Engineer will include a recommendation in the geotechnical report for a bridge on whether or not bridge approach slabs should be used at the bridge site. Factors considered while evaluating the need for bridge approach slabs include the amount of expected settlement and the type of bridge structure.

Standard Plan A-40.50 – The Standard Plan A-40.50 is available for the Local Agencies (or others) to use or reference in a contract. Bridge and Structures Office designs will provide detailed information in a customized approach slab Plan View and show the approach slab length on the Bridge Layout Sheet.

Bridge Runoff – Bridge runoff at the abutments shall be carried off and collected at least 10 feet beyond the bridge approach slab. Drainage structures such as grate inlets and catch basins shall be located in accordance with Standard Plan B-95.40 and the recommendations of the Hydraulics Branch.

Approach Pay Item –All costs in connection with constructing bridge approach slabs are included in the unit contract price per square yard for "Bridge Approach Slab". The pay item includes steel reinforcing bars, approach slab anchors, concrete, and compression seals.

10.6.1 Notes to Region for Preliminary Plan

All bridge preliminary plans shall show approach slabs at the ends of the bridges. In the Notes to Region in the first submittal of the Preliminary Plan to the Region, the designer shall ask the following questions:

1. Bridge approach slabs are shown for this bridge, and will be included in the Bridge PS&E. Do you concur?
2. The approach ends of the bridge approach slabs are shown normal to the survey line (a) with or (b) without steps (the designer shall propose one alternative). Do you concur?
3. Please indicate the pavement type for the approach roadway.

Depending on the type and number of other roadway features present at the bridge site (such as approach curbs and barriers, drainage structures, sidewalks, utilities and conduit pipes) or special construction requirements such as staged construction, other questions in the Notes to Region pertaining to the bridge approach slabs may be appropriate.

Special staging conditions exist when the abutment skew is greater than 30° and for wide roadway widths. This includes bridge widenings with (or without) existing bridge approach slabs. The preliminary plan should include details showing how these conditions are being addressed for the bridge approach slabs, and the designer shall include appropriate questions in the Notes to Region asking for concurrence with the proposed design.

10.6.2 Approach Slab Design Criteria

The standard bridge approach slab design is based on the following criteria:

1. The bridge approach slab is designed as a slab in accordance with AASHTO LRFD. (Strength Limit State, IM = 1.33, no skew).
2. The support at the roadway end is assumed to be a uniform soil reaction with a bearing length that is approximately ⅓ the length of the approach slab, or 25′/3 = 8′.
3. The Effective Span Length (S_{eff}), regardless of approach length, is assumed to be:

   25′ approach - 8′ = 17′ with a 25% allowable reduction in loads
4. Longitudinal reinforcing bars do not require modification for skewed approaches up to 30° or for slab lengths greater than 25′.
5. The approach slab is designed with a 2″ concrete cover to the bottom reinforcing.

10.6.3 Bridge Approach Slab Detailing

The bridge approach slab and length along center line of project shall be shown in the Plan View of the Bridge Layout sheet. The Bridge Plans will also include approach slab information as shown on Plan Sheets 10-A1-1, 10-A1-2, and 10-A1-3. The Approach Slab Plan sheets should be modified as appropriate to match the bridge site conditions. Approach slab Plan Views shall be customized for the specific project and all irrelevant details shall be removed.

Plan View dimensions need to define the plan area of the approach slab. The minimum dimension from the bridge is 25′. If there are skewed ends, then dimensions need to be provided for each side of the slab, or a skew angle and one side, in addition to the width. For slabs on a curve, the length along the project line and the width need to be shown.

Similar to Bridge Traffic Barrier detailing, approach slab steel detailing need only show size, spacing, and edge clearance. The number and total spaces can be determined by the contractor. If applicable, the traffic barrier AS1 and AS2 along with the extra top transverse bar in the slab need to be shown in the Plan View. AS1 bars shall be epoxy coated. Also remember that the spacing of the AS1 bars decreases near joints. When the skew is greater than 20°, then AP8 bars need to be rotated at the acute corners of the bridge approach slab.

Bending diagrams shall be shown for all custom reinforcement. All Approach Slab sheets will have the AP2 and AP7 bars. If there is a traffic barrier, then AP8, AS1, and AS2 bars shall be shown.

Additional layout and details may be required to address special roadway features and construction requirements such as: roadway curbs and barriers, sidewalks, utilities and conduits and staging. This means, if sidewalks and interior barriers (such as traffic-pedestrian barriers) are present, special details will be required in the Bridge Plans to show how the sidewalks and interior barriers are connected to and constructed upon the bridge approach slab. If the bridge construction is staged, then the approach slabs will also require staged construction.

10.6.4 Skewed Approach Slabs

For all skewed abutments, the roadway end of the bridge approach slab shall be normal to the roadway centerline. The Bridge Design Engineer should be consulted when approach slab skew is greater than 30°. Higher skewed bridges require modifications to the bottom mat reinforcement, and may require expansion joint modifications.

The roadway end of the approach may be stepped to reduce the size or to accommodate staging construction widths. A general rule of thumb is that if the approach slab area can be reduced by 50 SY or more, then the slab should be stepped. At no point should the roadway end of the approach slab be closer than 25′ to the bridge. These criteria apply to both new and existing bridge approach slabs. If stepped, the design should provide the absolute minimum number of steps and the longitudinal construction joint shall be located on a lane line. See Figure 10.6.4-1 for clarification.

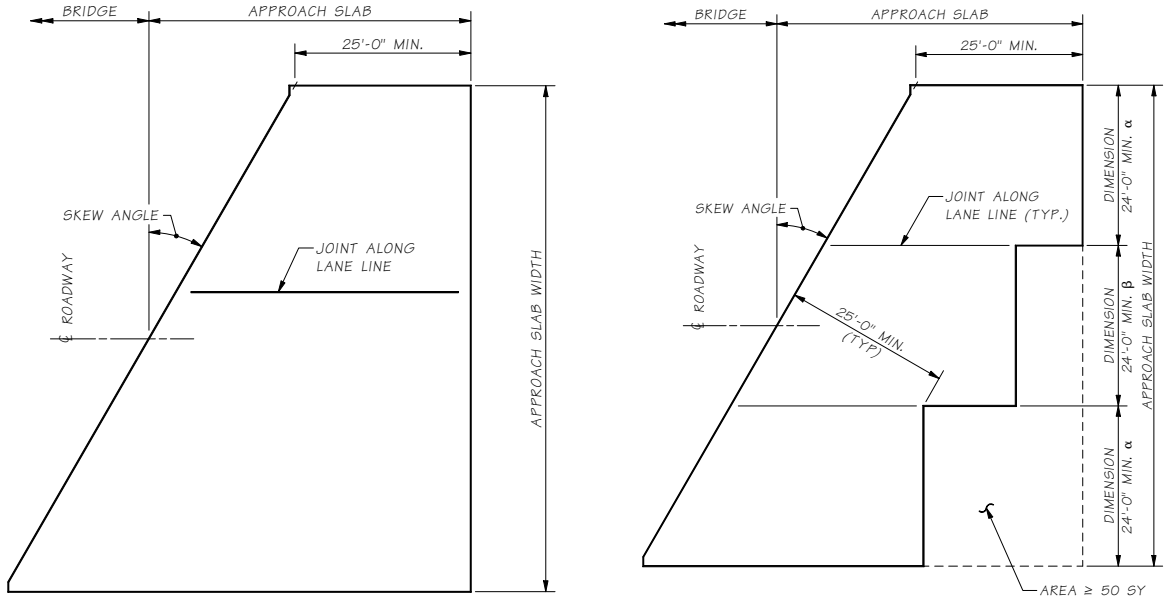

Skewed Approach ~ Typical **Skewed Approach ~ Stepped**

α - DIMENSION MAY BE ONE LANE WIDTH PLUS THE SHOULDER WIDTH IF THE SHOULDER ≥ 8'-0".

β - DIMENSION MAY BE TWO LANE WIDTHS.

Skewed Approach
Figure 10.6.4-1

In addition, for bridges with traffic barriers and skews greater than 20°, the AP8 bars shall be rotated in the acute corners of the bridge approach slabs. Typical placement is shown in the flared corner steel detail, Figure 10.6.4-2.

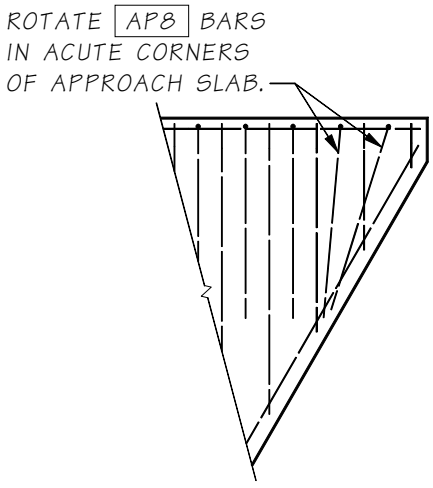

Flared Corner Steel
Figure 10.6.4-2

10.6.5 Approach Anchors and Expansion Joints

For semi-integral abutments or stub abutments, the Bridge Designer must check the joint design to make sure the movement of the standard joint is not exceeded. In general, the approach slab is assumed to be stationary and the joint gap is designed to vary with the bridge movement. Approach Slab Sheets 10-A1-3 and Standard Plan A-40.50 detail a typical 2½″ compression seal. For approach slabs with barrier, the compression seal should extend into the barrier.

Approach slab anchors installed at bridge abutments should be as shown in the Bridge Plans. For bridges with semi-integral type abutments, this can be accomplished by showing the approach slab anchors in the End Diaphragm or Pavement Seat details.

L Type Abutments – L type abutments do not require expansion joints or approach anchors because the abutment and approach slab are both considered stationary. A pinned connection is preferred. The L type abutment anchor detail, as shown sign in Figure 10.6.5-1, must be added to the abutment plan sheets. The pinned anchor for bridges with L type abutments shall be a #5 bar at one foot spacing, bent as shown, with 1′-0″ embedment into both the pier and the bridge approach slab. This bar shall be included in the bar list for the bridge substructure.

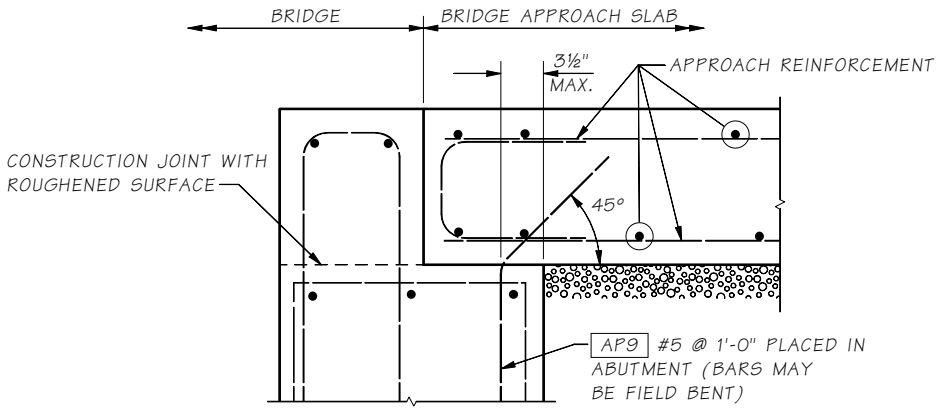

L Type Abutment Anchor Detail
Figure 10.6.5-1

10.6.6 Approach Slab Addition or Retrofit to Existing Bridges

When approach slabs are to be added or replaced on existing bridges, modification may be required to the pavement seats. Either the new approach slab will be pinned to the existing pavement seat, or attached with approach anchors with a widened pavement seat. Pinning is a beneficial option when applicable as it reduces the construction cost and time.

The pinning option is only allowed on semi-integral abutments as an approach slab addition or retrofit to an existing bridge. Figure 10.6.6-1 shows the pinning detail. As this detail eliminates the expansion joint between the approach slab and the bridge, the maximum bridge superstructure length is limited to 150′. The Bridge Design Engineer may modify this requirement on a case by case basis. Additionally, if the roadway end of the approach slab is adjacent to PCCP roadway, then the detail shown in Figure 10.6.6-2 applies. PCCP does not allow for as much movement as HMA and a joint is required to reduce the possibility of buckling.

When pinning is not applicable, then the approach slab must be attached to the bridge with approach anchors. If the existing pavement seat is less than 10 inches, the seat shall be replaced with an acceptable, wider pavement seat. The Bridge Design Engineer may modify this requirement on a site-specific basis. Generic pavement seat repair details are shown in Appendix 10.6-A2-1 for a concrete repair and Appendix 10.6-A2-2 for a steel T-section repair. These sheets can be customized for the project and added to the Bridge Plans.

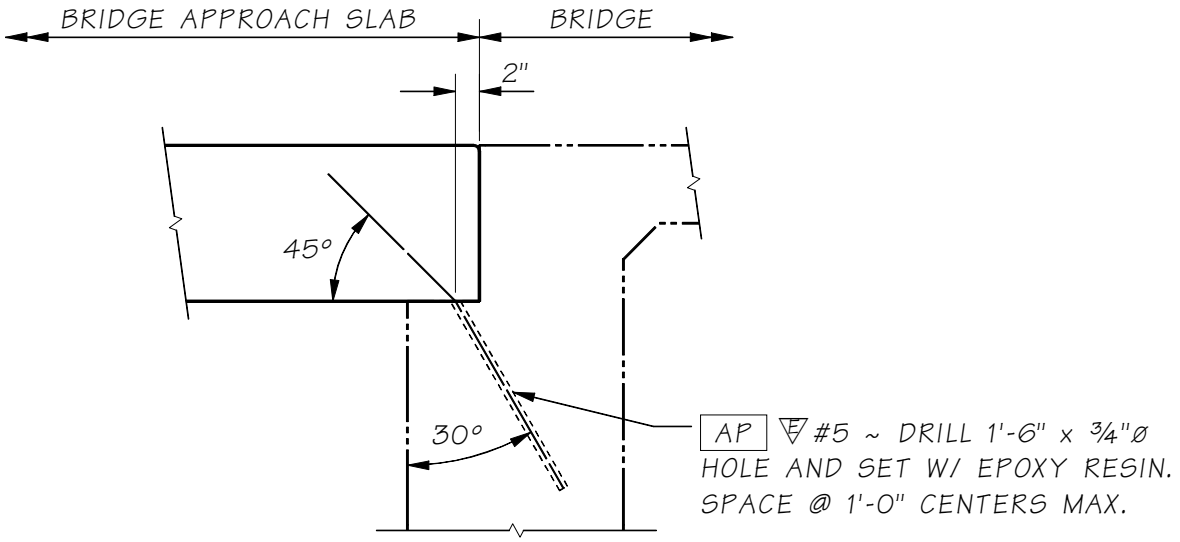

Pinned Approach Slab Detail
Figure 10.6.6-1

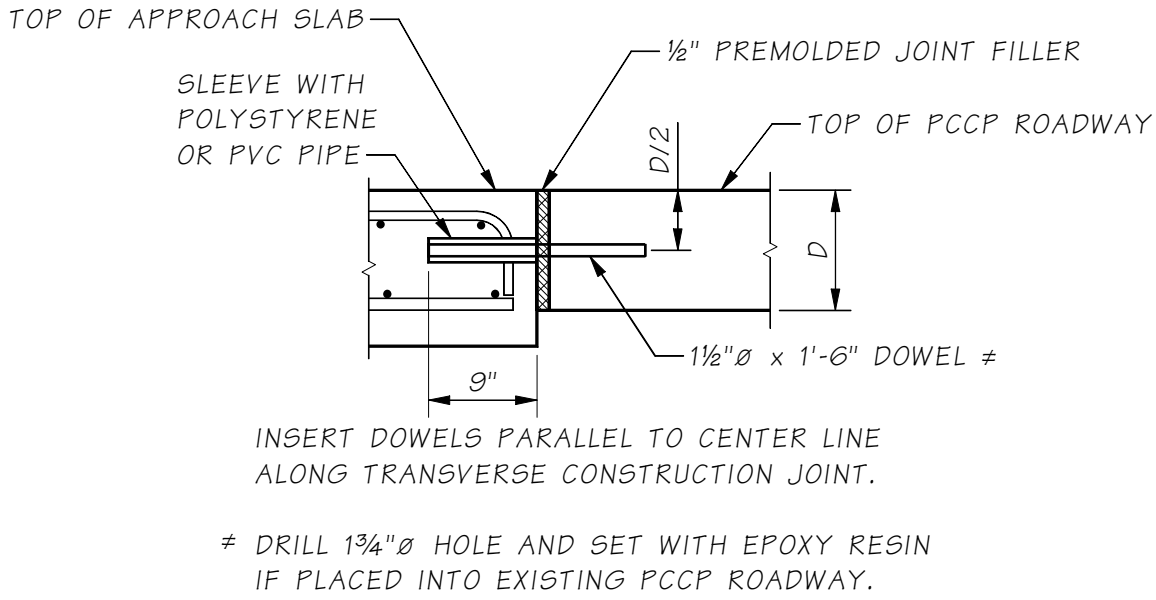

PCCP Roadway Dowel Bar Detail
Figure 10.6.6-2

10.6.7 Approach Slab Staging

Staging plans will most likely be required when adding or retrofitting approach slabs on existing bridges. The staging plans will be a part of the bridge plans and should be on their own sheet. Coordination with the Region is required to ensure agreement between the bridge staging sheet and the Region traffic control sheet. The longitudinal construction joints required for staging shall be located on lane lines. As there may not be enough room to allow for a lap splice in the bottom transverse bars, a mechanical splice option should be added. If a lap splice is not feasible, then only the mechanical splice option should be given. See Figure 10.6.6-3.

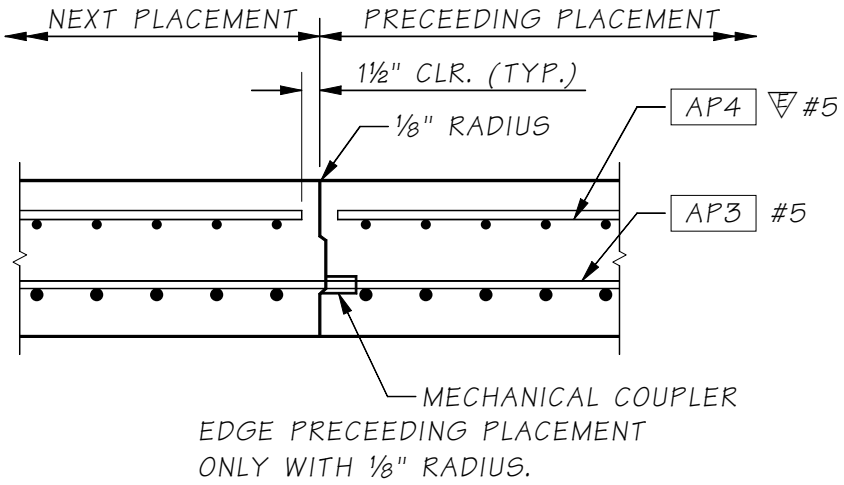

Alternate Longitudinal Joint Detail
Figure 10.6.6-3

10.7 Traffic Barrier on Approach Slabs

Placing the traffic barrier on the approach slab is beneficial for the following reasons.

- The approach slab resists traffic impact loads and may reduce wing wall thickness
- Simplified construction and conduit placement
- Bridge runoff is diverted away from the abutment

Most bridges will have some long-term differential settlement between the approach roadway and the abutment. Therefore, a gap between the approach slab and wing (or wall) should be shown in the details. The minimum gap is twice the long-term settlement, or 2 inches as shown in Figure 10.7-1. A 3 inch gap is also acceptable.

When the traffic barrier is placed on the approach slab, the following barrier guidelines apply.

- Barrier should extend to the end of the approach slab
- Conduit deflection or expansion fittings must be called out at the joints
- Junction box locations should start and end in the approach
- The transverse top reinforcing in the slab must be sufficient to resist a traffic barrier impact load. A 6′-0″ (hooked) #6 epoxy coated bar shall be added to the approach slab as shown in Figure 10.7-1.

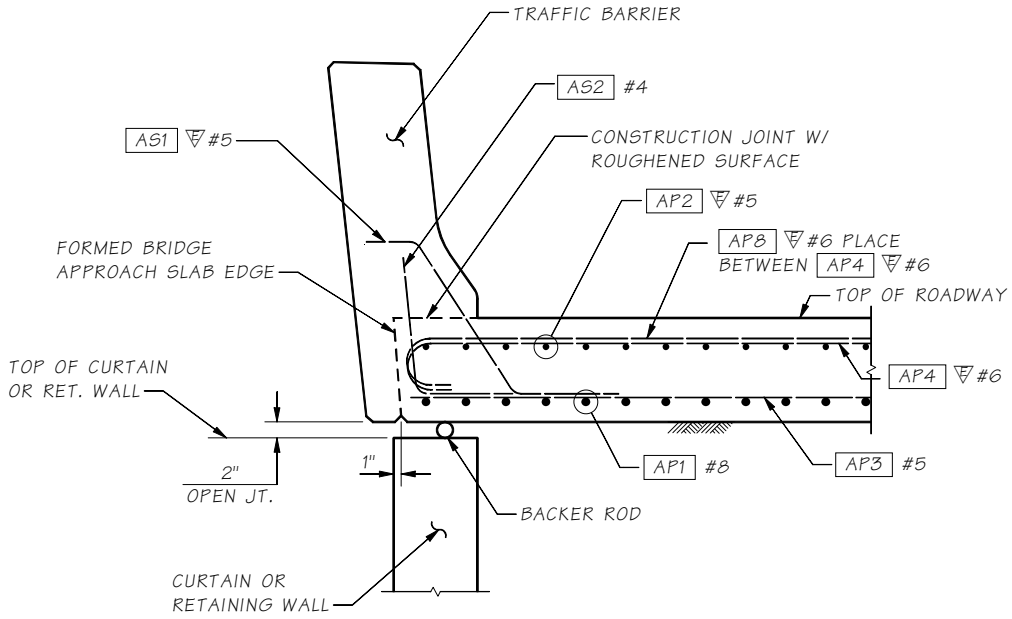

Figure 10.7-1

10.7.1 Approach Slab over Wing Walls, Cantilever Walls or Geosynthetic Walls

All walls that are cast-in-place below the approach slab should continue the barrier soffit line to grade. This includes geosynthetic walls that have a cast-in-place fascia. Figure 10.7.1-1 shows a generic layout at an abutment. Note the sectional Gap Detail, Figure 10.7-1 applies.

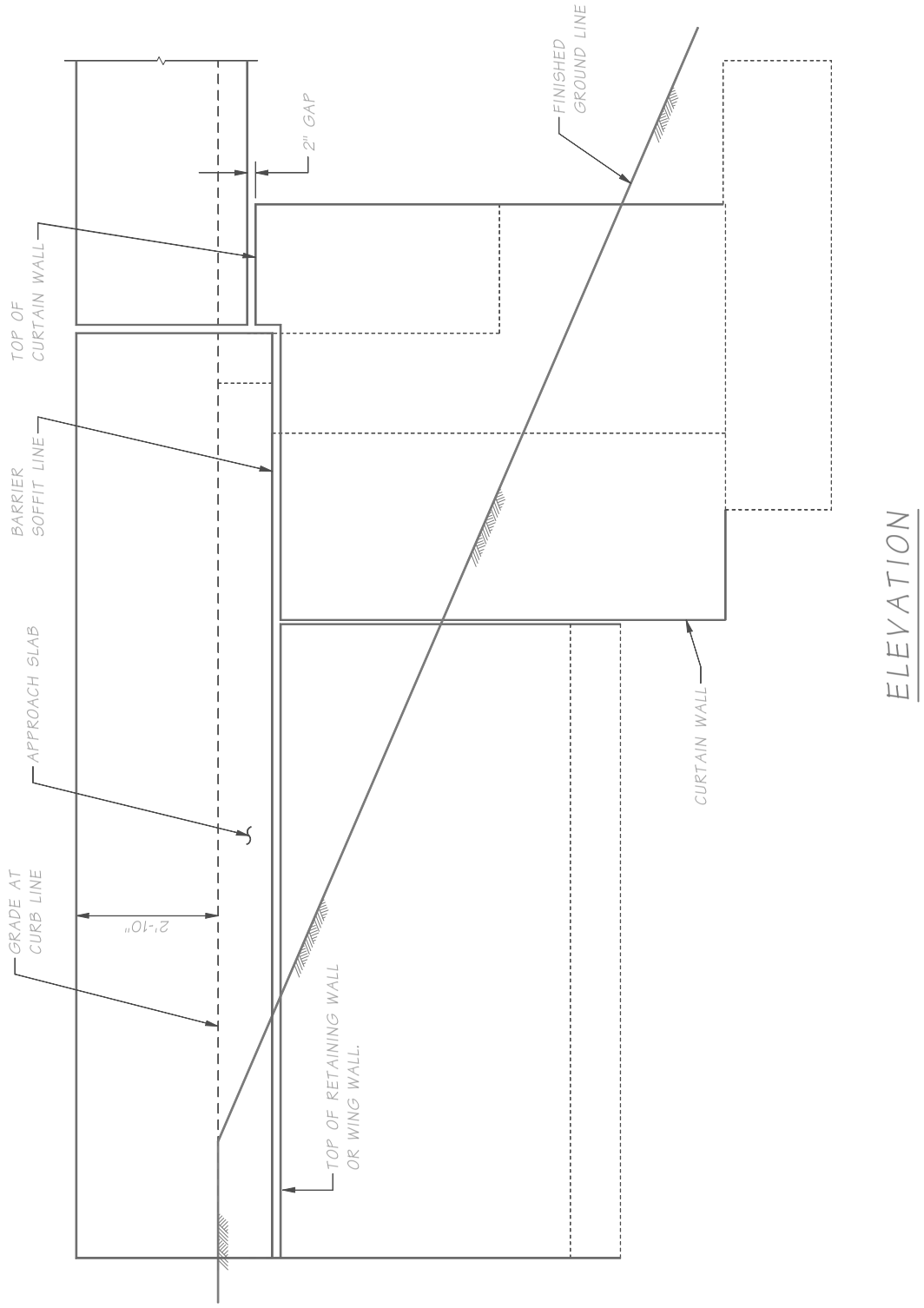

Figure 10.7.1-1

10.7.2 Approach Slab over SE Walls

The tops of structure earth (SE) walls are uneven and must be covered with a fascia to provide a smooth soffit line. Usually SE walls extend well beyond the end of the approach slab and require a moment slab. Since SEW barrier is typically 5′-0″ deep from the top of the barrier, the soffit of the SEW barrier and bridge barrier do not match. The transition point for the soffit line should be at the bridge expansion joint as shown in Figure 10.7.2-2. This requires an extended back side of the barrier at the approach slab to cover the uneven top of the SE wall.

Battered wall systems, such as block walls, use a thickened section of the curtain wall to hide some of the batter. The State Bridge and Structures Architect will provide dimensions for this transition when required.

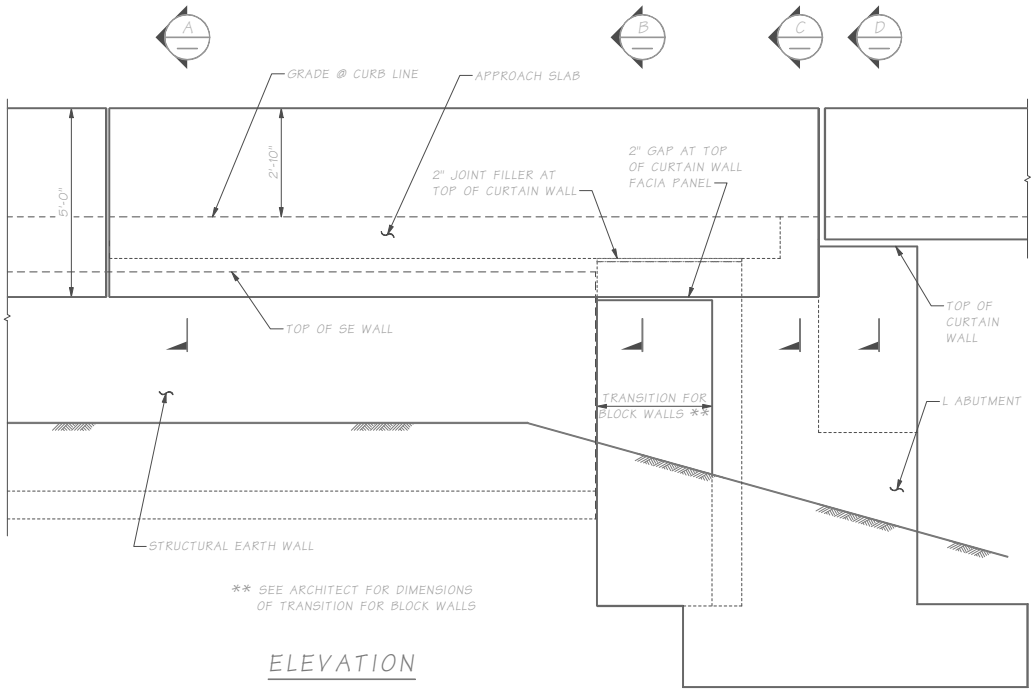

Figure 10.7.2-1

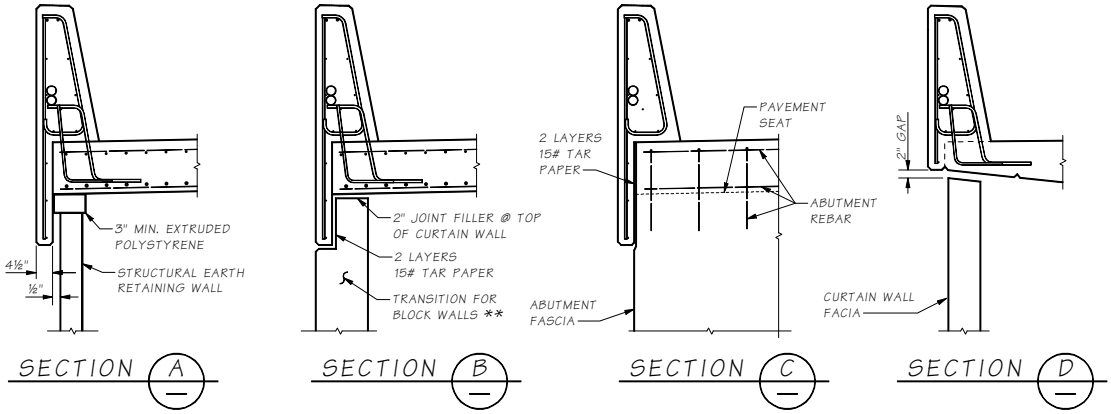

Figure 10.7.2-2

10.8 Utilities Installed with New Construction

10.8.1 General Concepts

The utilities to be considered under this section are electrical (power and communications) volatile fluids (gas), water, and sewer/storm water pipes. The Bridge designer shall determine if the utility may be attached to the structure and the location. Bridge plans shall include all hardware specifications and details for the utility attachment as provided in any written correspondence with the utility.

The Specifications Engineer will contact the Region Utility Engineer for additional design or construction requirements that may be stipulated in the utility agreement.

Responsibilities of the Utility Company – The Region or utility company will initiate utility installations and provide design information. The utility company shall be responsible for calculating design stresses in the utility and design of the support system. Utility support design calculations with a State of Washington Professional Engineer stamp, signed and dated, shall be submitted to the Bridge and Structures Office for review. The following information shall be provided by the utility company and shown in the final Bridge Plans.

- Location of the utility outside the limits of the bridge structure
- Number of utilities, type, size, and weight (or Class) of utility lines
- Utility minimum bending radius for the conduit or pipeline specified

Utility General Notes and Design Criteria are stated in WSDOT Form 224-047 "General Notes and Design Criteria for Utility Installations to Existing Bridges". See Figure 10.8.1-1. This form outlines most of the general information required by the utility company to design their attachments. The Bridge Office will generally provide the design for lightweight hanger systems, such as electrical conduits, attached to new structures.

Confined Spaces – A confined space is any place having a limited means of exit that is subject to the accumulation of toxic or flammable contaminants or an oxygen deficient environment. Confined spaces include but are not limited to pontoons, box girder bridges, storage tanks, ventilation or exhaust ducts, utility vaults, tunnels, pipelines, and open-topped spaces more than 4 feet in depth such as pits, tubes, vaults, and vessels.

Coating and Corrosion Protection – When the bridge is to receive pigmented sealer, consideration shall be given to painting any exposed utility lines and hangers to match the bridge. When a pigmented sealer is not required, steel utility conduits and hangers shall be painted or galvanized for corrosion protection. The special provisions shall specify cleaning and painting procedures.

Washington State Department of Transportation

General Notes and Design Criteria for Utility Installations to Existing Bridges

General Notes

All materials and workmanship shall be in accordance with the requirements of the state of Washington, Department of Transportation, Standard Specifications for Road, Bridge, and Municipal Construction, current edition. The utility conduits shall be labeled in accordance with Section 6-01.10.

All steel in utility supports, including fastenings and anchorages, shall be galvanized in accordance with AASHTO M-111 or M-232 (ASTM A-123 or A-153 respectively).

All utilities and utility support surfaces, including any galvanized utilities, shall be given a primer coat of state standard formula A-6-86 and two coats of state standard formula C-9-86. The final coat shall match the bridge color.

Galvanized metal or aluminum utilities completely hidden from public view may be exempted from the above painting requirements.

Any painted surfaces damaged during construction shall be cleaned and painted as noted above.

Any paint splatters shall be removed from the bridge.

Appearance of the utility installation shall be given serious consideration in all cases. Where possible, the utility installation shall be hidden from public view.

The notes and criteria explained here are presented as a guide only. Each proposed utility installation shall be submitted to the Department of Transportation for approval on an individual basis. Compliance with these criteria does not assure approval, nor does variance from these criteria, for reasonable cause, necessarily exclude approval.

Design Criteria

1. Pipelines carrying volatile fluids through a bridge superstructure shall be designed by the utility company in accordance with WAC 480-93, Gas Companies - Safety, and Minimum Federal Safety Standard, Title 49 Code of Federal Regulations (CFR) Section part 192. WAC 468-34-210, Pipelines - Encasement, describes when casing is required for carrying volatile fluids across structures. Generally, casing is not required for pipelines conveying natural gas per the requirements of WAC 468-34-210. If casing is required, then WAC 468-34-210 and WAC 480-93-115 shall be followed.
2. Utilities shall not be attached above the bridge deck nor attached to railing or rail posts.
3. Utilities shall not extend below bottom of superstructure.

Exhibit " _____ "

Permit/Franchise _____

Page _____ of _____

DOT Form 224-047 EF
Revised 5/10

General Notes and Design Criteria for Utility Installations to Existing Bridges
WSDOT Form 224-047
Figure 10.8.1-1

4. The utilities shall be provided with suitable expansion devices near bridge expansion joints and/or other locations as required to prevent temperature and other longitudinal forces from being transferred to bridge members.
5. Rigid conduit shall extend 10 feet (3 meters) minimum, beyond the end of the bridge abutment.
6. Utility supports shall be designed such that neither the conduit, the supports, nor the bridge members are overstressed by any loads imposed by the utility installation.
7. Utility locations and supports shall be designed so that a failure (rupture, etc.) will not result in damage to the bridge, the surrounding area, or be a hazard to traffic.
8. Conduit shall be rigid.

(Items 1 through 8 may be cross-referenced with Bridge Design Manual, Utilities Section.)

9. Lag screws may be used for attaching brackets to wooden structures. All bolt holes shall meet the requirements of Sections 6-04.3(4) and 6-04.3(5) of the Washington State Department of Transportation Standard Specifications for Road, Bridge, and Municipal Construction, current edition.
10. Welding across main members will not be permitted. All welding must be approved.
11. Utilities shall be located to minimize bridge maintenance and bridge inspection problems.
12. Attach conduits or brackets to the concrete superstructure with resin bond anchors. Lag screws shall not be used for attachment to concrete.
13. Drilling through reinforcing steel will not be permitted. If steel is hit when drilling, the anchorage location must be moved and the abandoned hole filled with nonshrink grout conforming to the requirements of Section 9-20.3(2) and placement shall be as required in Section 6-02.3(20) of the Washington State Department of Transportation Standard Specifications for Road, Bridge, and Municipal Construction, current edition.
14. There shall be a minimum of 3 inches (80 millimeters) edge distance to the center line of bolt holes in concrete.
15. All utilities and utility supports shall be designed not only to support their dead load but to resist other forces from the utility (surge, etc.) and wind and earthquake forces. The utility company may be asked to submit one set of calculations to verify their design forces.
16. Drilling into prestressed concrete members for utility attachments shall not be allowed.
17. Water or sewer lines to be placed lower than adjacent bridge footings shall be encased if failure can cause undermining of the footing.

Exhibit " _____ "

Permit/Franchise _____

DOT Form 224-047 EF
Revised 5/10

Page _____ of _____

General Notes and Design Criteria for Utility Installations to Existing Bridges (continued)
WSDOT Form 224-047
Figure 10.8.1-1

10.8.2 Utility Design Criteria

All utilities shall be designed to resist Strength and Extreme Event Limits States. This includes and not limited to dead load, expansion, surge, and earthquake forces. Designers should review WSDOT Form 224-047 "General Notes and Design Criteria for Utility Installations to Existing Bridges" and the items in this section when designing a utility system or providing a review for an existing bridge attachment. See Figure 10.8.1-1.

The Bridge Engineer shall review the utility design to ensure the utility support system will carry all transverse and vertical loading. Loading will include (and is not limited to): dead load, temperature expansion, dynamic action (water hammer), and seismic inertial load. Positive resistance to loads shall be provided in all directions perpendicular to and along the length of the utility as required by the utility engineer.

Where possible, dynamic fluid action loads shall be resisted off of the bridge. If these loads must be resisted on the bridge, the utility engineer shall be involved in the design of these supports. The utility engineer shall determine these design forces being applied to the bridge. Realize these forces can be generated in any pipe supporting moving fluids, which may include, but are not limited to: water, sewer, and storm water.

Where utilities are insulated, the insulation system shall be designed to allow the intended motion range of the hardware supporting the utility. This will prevent unanticipated stresses from being added to the hanger in the event the insulation binds up the hardware.

Utility Location – Utilities should be located, if possible, such that a support failure will not result in damage to the bridge, the surrounding area, or be a hazard to traffic. In most cases, the utility is installed between girders. Utilities and supports must not extend below the bottom of the superstructure. Utilities shall be installed no lower than 1 foot 0 inches above the bottom of the girders. In some cases when appurtenances are required (such as air release valves), care should be taken to provide adequate space. The utility installation shall be located so as to minimize the effect on the appearance of the structure. Utilities shall not be attached above the bridge deck nor attached to the railings or posts.

Termination at the Bridge Ends – Utility conduit and encasements shall extend 10 feet minimum beyond the ends of the structure in order to reduce effects of embankment settlement on the utility and provide protection in case of future work involving excavation near the structure. This requirement shall be shown on the plans. Utilities off the bridge must be installed prior to paving of approaches. This should be stated in the Special Provisions.

Utility Expansion – The utilities shall be designed with a suitable expansion system as required to prevent longitudinal forces from being transferred to bridge members.

Water mains generally remain a constant temperature and are anchored in the ground at the abutments. However, the bridge will move with temperature changes and seismic forces. Pipe support systems must be designed to allow for the bridge movements. For short bridges, this generally means the bridge will move and the utility will not since it is anchored at the abutments. For long bridges that require pipe expansion joints, design must carefully locate pipe expansion joints and the corresponding longitudinal load-carrying support.

Electrical conduits that use PVC should have an expansion device for every 100 foot of pipe due to the higher coefficient of expansion. If more than two joints are specified, a cable or expansion limiting device is required to keep the ends from separating.

Utility Blockouts – Blockouts shall be provided in all structural members that prohibit the passage of utilities, such as girder end diaphragms, pier crossbeams, and intermediate diaphragms. These blockouts shall be large enough to fit deflection fittings, and shall be parallel to the utility. For multiple utilities, a note shall be added to the plans that the deflection fittings shall be staggered such that no fitting is located adjacent to another, or the blockouts shall be designed to fit both fittings. Expansion fittings shall be staggered.

Gas Lines or Volatile Fluids – Pipelines carrying volatile fluids through a bridge superstructure shall be designed by the utility company in accordance with WAC 480-93, Gas Companies—Safety, and Minimum Federal Safety Standard, Title 49 Code of Federal Regulations (CFR) Section part 192. WAC 468-34-210, Pipelines—Encasement, describes when casing is required for carrying volatile fluids across structures. Generally, casing is not required for pipelines conveying natural gas per the requirements of WAC 468-34-210. If casing is required, then WAC 468-34-210 and WAC 480-93-115 shall be followed.

Water Lines – Water lines shall be galvanized steel pipe or ductile iron pipe. Transverse support or bracing shall be provided for all water lines to carry Strength and Extreme Event Lateral Loading. Fire control piping is a special case where unusual care must be taken to handle the inertial loads and associated deflections. The Utility Engineer shall be involved in the design of supports resisting dynamic action loads and deflections.

In box girders (closed cell), a rupture of a water line will generally flood a cell before emergency response can shut down the water main. This will be designed for as an Extreme Event II load case, where the weight of water is a dead load (DC). Additional weep holes or open grating should be considered to offset this Extreme Event (see Figure 10.8.3-1).

Sewer Lines – Normally, an appropriate encasement pipe is required for sewer lines on bridges. Sewer lines must meet the same design criteria as waterlines. See the utility agreement or the Hydraulic Section for types of sewer pipe material typically used.

Electrical (Power and Communications) – Telephone, television cable, and power conduit shall be galvanized Rigid Metal Conduit (RGS) or Rigid Polyvinyl Chloride Conduit (PVC). Where such conduit is buried in concrete curbs or barriers or has continuous support, such support is considered to be adequate. Where hangers or brackets support conduit at intervals, the maximum distance between supports shall be 5 feet. Generally, the conduit shall be designed to support the cable in bending without exceeding working stresses for the conduit material.

10.8.3 Box/Tub Girder Bridges

Utilities shall not be permitted inside reinforced concrete box girders less than 4 feet inside clear height and all precast prestressed concrete tub girders because reasonable access cannot be provided. Utilities shall be located between girders or under bridge deck soffit in these cases. Inspection lighting, access and ventilation shall always be provided in girder cells containing utilities. Refer to the concrete and steel chapters for additional details.

Continuous Support and Concrete Pedestals – Special utilities (such as water or gas mains) in box girder bridges should use concrete pedestals. This allows the utility to be placed, inspected, and tested before the deck is cast. Concrete pedestals consist of concrete supports formed at suitable intervals and provided with some type of clamping device. A continuous support may be achieved by providing a ledge of concrete to support the conduit. Continuous supports should be avoided due to the very high cost and additional dead load to the structure.

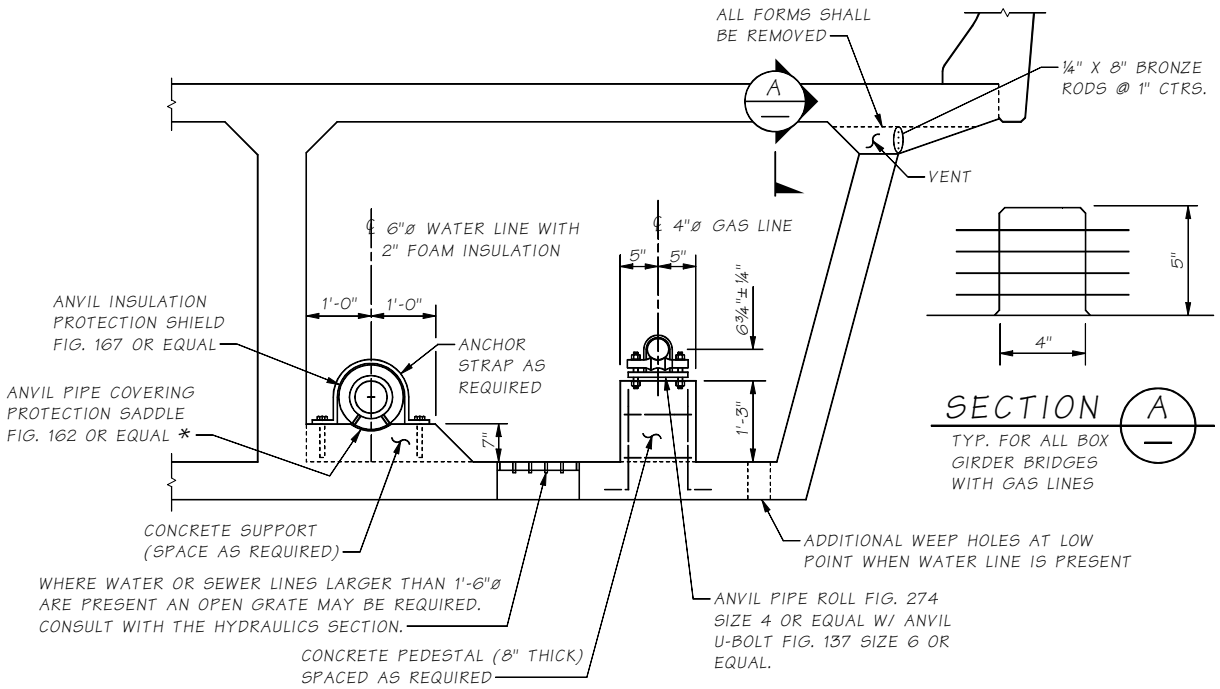

CONCRETE UTILITY SUPPORTS

* SEE ANVIL PIPE HANGERS CATALOG.

Figure 10.8.3-1

10.8.4 Traffic Barrier Conduit

All new bridge construction will install two (2) 2-inch galvanized Rigid Metal Conduit (RGS) or Rigid Polyvinyl Chloride Conduit (PVC) in the traffic barriers. These conduits generally carry wiring for Traffic Signals (TS) and Lighting (LT). Other wiring may be installed or the conduit may be used for future applications. PVC conduit may be used only in stationary-form barriers, and will connect to RGS using a PVC adaptor when exiting the barrier. RGS conduit may be used in stationary-form barriers, but it shall be used in slipform barriers.

Conduits shall be stubbed-out at a concrete junction box provided in the Region Plans. The Bridge Plans must show the placement of the conduits to clear the structure or any foreseeable obstructions.

The galvanized steel conduit shall be wrapped with corrosion resistant tape at least one foot inside and outside of the concrete structure, and this requirement shall be so stated on the plans. The corrosion resistant tape shall be 3M Scotch 50, Bishop 5, Nashua AVI 10, or approved equal. The usual location of the conduit throughout the remainder of the bridge should be in the traffic barrier.

Pull boxes shall be provided at a maximum spacing of 180 feet. For fiber optics only, spacing shall not exceed 360 feet. The pull box size shall conform to the specifications of the National Electric Code or be a minimum of 8 inches by 8 inches by 18 inches to facilitate pulling of wires. Galvanized steel pull boxes (or junctions boxes) shall meet the specifications of the "NEMA Type 4X" standard for stationary-form barrier, shall meet the specifications of the "NEMA 3R" and be adjustable in depth for slip form barrier, and the NEMA junction box type shall be stated on the plans. Stainless steel pull boxes shall be allowed as an option to the galvanized steel.

In the case of existing bridges, an area 2 feet in width shall be reserved for conduit beginning at a point either 4 feet or 6 feet outside the face of usable shoulder. The fastening for and location of attaching the conduit to the existing bridge should be worked out on a job-by-job basis.

10.8.5 Conduit Types

All electrical conduits shall be galvanized Rigid Metal Conduit (RGS) or Rigid Polyvinyl Chloride Conduit (PVC).

Steel Pipe – All pipe and fittings shall be galvanized except for special uses.

PVC Pipe – PVC pipe may be used with suitable considerations for deflection, placement of expansion fittings, and of freezing water within the conduits. PVC pipe should not be placed in concrete traffic barriers when the slip form method is used due to damage and pipe separation that often occurs during concrete placement.

10.8.6 Utility Supports

The following types of supports are generally used for various utilities. Selection of a particular support type should be based on the needs of the installation and the best economy. All utility installations shall address temperature expansion in the design of the system or expansion devices.

Utility supports shall be designed so that a failure will not result in damage to the bridge, the surrounding area, or be a hazard to traffic. Utility supports shall be designed so that any loads imposed by the utility installation do not overstress the conduit, supports, bridge structure, or bridge members.

Designs shall provide longitudinal and transverse support for loads from gravity, earthquakes, temperature, inertia, etc. It is especially important to provide transverse and longitudinal support for inserts that cannot resist moment.

The Bridge Engineer should request calculations from the utility company for any attachment detail that may be questionable. Utility attachments, which exert moments or large forces at the supports, shall be accompanied by at least one set of calculations from the utility company. Bridge attachments designed to resist surge forces should always be accompanied by calculations.

Concrete Embedment – This is the best structural support condition and offers maximum protection to the utility. Its cost may be high for larger conduit and the conduit cannot be replaced.

Pipe Hangers – Utility lines shall be suspended by means of cast-in-place inserts, whenever possible. This is the most common type of support for utilities to be hung under the bridge deck. This allows the use of standard cast-in-place inserts and is very flexible in terms of expansion requirements. For heavy pipes over traffic (10″ water main or larger), a Safety Factor of 1.5 should be used to resist vertical loads for Strength design. This is to avoid complete failure of the utility hanger system by failure of one hanger. Vertical inserts will not provide resistance to longitudinal forces. Longitudinal and transverse supports shall be provided for ITS conduits. Vertical supports shall be spaced at 5 foot maximum intervals for telephone and power conduits, and at a spacing to resist design loads for all other utilities.

When 3/4″ or 7/8″ diameter hanger rods are suspended from cast-in-place inserts, at least three of the following inserts shall be identified: Cooper B-Line B22-I Series, Unistrut 3200 Series, Powerstrut 349 Series, Halfen HT5506 or similar. The specific cast-in-place insert within each series shall be identified based on the required length of insert. The cast-in-place insert shall be at least 6” long and hot dipped galvanized per AASHTO M 111 or AASHTO M 232.

The Bridge Engineer shall verify that the insert does not interfere with reinforcement in the bridge deck since the inserts are installed level longitudinally and transversely. When the superelevation of the roadway is not significant, a single, long insert may be used to support multiple hanger rods. When the superelevation becomes significant, a single insert may be used for each hanger.

Occasionally large diameter utilities require pipe rolls that only fit on 1” diameter hanger rods. When 1” diameter hanger rods are required, the Anvil Fig. 286 insert shall be used. The designer shall only specify this insert when absolutely necessary.

The Bridge Engineer shall verify that the cast-in-place insert has sufficient capacity to support the loads from the hanger rod.

Transverse supports may be provided by a second hanger extending from a girder or by a brace against the girder. The Appendix 10.8-A1-1 and 10.8-A1-2 depict typical utility support installations and placement at abutments and diaphragms. Transverse supports shall, at a minimum, be located at every other vertical support.

PROPERTIES OF PVC PIPE

The following are recommended support spacings for PVC pipe.
(Ref: Western Plastics Corporation)

PVC Schedule 40

Nominal Size Inches	MM	O.D. Inches	MM	I.D. Inches	MM	Wall Thickness Inches	MM	Pounds Per 100 Feet	Newtons Per Meter	Recom. Support Spacing* (Feet)	(M)
¾	19	1.050	26.7	.824	20.9	.113	2.87	22.0	1.80	4	1.2
1	25	1.315	33.4	1.049	26.6	.133	3.38	32.0	2.67	4½	1.4
1¼	32	1.660	42.2	1.380	35.1	.140	3.50	43.5	3.61	5	1.5
1½	38	1.900	48.3	1.610	40.9	.145	3.68	52.0	4.31	5	1.5
2	51	2.375	60.3	2.067	52.5	.154	3.91	69.5	5.78	5	1.5
2½	64	2.875	73.0	2.469	62.7	.203	5.16	109.5	9.18	6	1.8
3	75	3.500	88.9	3.068	77.9	.216	5.49	143.0	12.0	6	1.8
4	102	4.500	114.3	4.026	102.3	.237	6.02	203.5	17.1	6½	2.0
5	127 (Use 5" PVC Class 200)							276.0	23.2	7	2.1
6	152	6.625	168.3	6.065	154.1	.280	7.11	359.0	30.1	7½	2.3
8	203 (Use 8" PVC Class 160)									8	2.4
10	254									8½	2.6
12	310									9½	2.9

PVC Schedule 80

Nominal Size Inches	MM	O.D. Inches	MM	I.D. Inches	MM	Wall Thickness Inches	MM	Pounds Per 100 Feet	Newtons Per Meter	Recom. Support Spacing* (Feet)	(M)
½	13	.840	21.3	.546	13.9	.147	3.73	20.5	1.72	4½	1.4
¾	19	1.050	26.7	.742	18.8	.154	3.91	28.0	2.34	4½	1.4
1	25	1.315	33.4	.957	24.3	.179	4.55	41.0	3.45	5	1.5
1¼	32	1.660	42.2	1.278	32.5	.191	4.85	56.5	4.76	5½	1.7
1½	38	1.900	48.3	1.500	38.1	.200	5.08	68.5	5.78	5½	1.7
2	51	2.375	60.3	1.939	49.3	.218	5.54	94.5	7.99	6	1.8
2½	64	2.875	73.0	2.323	59.0	.276	7.01	144.5	12.2	6½	2.0
3	75	3.500	88.9	2.900	73.7	.300	7.62	193.0	16.3	7	2.1
4	102	4.500	114.3	3.826	97.2	.337	8.56	282.0	23.8	7½	2.3
5	127	5.563	141.3	4.813	122.3	.375	9.53	392.0	33.0	8	2.4
6	152	6.625	168.3	5.761	146.3	.432	10.97	539.0	45.4	9	2.7
8	203									9½	2.9

*Spacings shown are set for a 100° maximum temperature.

The physical properties of PVC material are:

E = 410,000 psi
Tensile Strength = 7,300 psi at 78°F
Working Stress in Bending 4.0 k/in.^{2}
Temperature Coefficient - .035 inches per 100 degrees F per foot

Table 10.8.6-1

10.9 Utility Review Procedure for Installation on Existing Bridges

It is the responsibility of the Region Utilities Engineer to forward any proposed attachments to existing bridges to the Bridge Preservation Office. The Bridge Preservation Office is responsible for reviewing only those details pertaining to the bridge crossing such as attachment details or trenching details adjacent to bridge piers or abutments.

The Bridge Preservation Office reviews proposed utility attachments and either approves the attachment or returns for correction (RFC). A current file for most utility attachments is maintained in the Bridge Preservation Office. The turnaround time for reviewing the proposals should not exceed four weeks.

The Region determines the number of copies to be returned. Most Regions send five copies of the proposed utility attachment. If the proposal is approved, Bridge Preservation will file one copy in the utility file and return four marked copies. If it has been returned for correction or not approved, one copy is placed in the utility file and two marked copies are returned, thru the Region, to the utility. See Section 10.9.1, "Utility Review Checklist."

Utility attachments, which exert moments or large forces at the supports, should be accompanied by at least one set of calculations from the utility company. Bridge attachments designed to resist surge forces should always be accompanied by calculations. The connection details shall be designed to successfully transfer all forces to the bridge without causing overstress in the connections or to the bridge members to which they are attached. For large utilities, the bridge itself shall have adequate capacity to carry the utility without affecting the live load capacity.

The engineer may request calculations from the utility company for any attachment detail that may be questionable. All plans, details, and calculations shall be stamped, signed, and dated by a Professional Engineer licensed in the State of Washington. Additionally, for heavier utilities, such as waterlines or sewer lines, the engineer may request a load rating of the structure, which shall be stamped, signed, and dated by a licensed professional engineer in the state of Washington to follow the guidelines of Chapter 13 of the BDM. The ratings shall be based solely on the engineer of record calculations.

Guidelines for Utility Companies

Detailing guidelines for utility companies to follow when designing utility attachments are listed in WSDOT Form 224-047, "General Notes and Design Criteria for Utility Installations to Existing Bridges." See Figure 10.8.1-1. See Section 10.8 for other requirements, which include, but are not limited to: design of utility, material used, and spacing of supports.

Guidelines for Column Attachments

The following guidelines shall be followed for installing attachments to columns.

- Attachments on round columns may be either drilled and bolted or banded.
- Attachments on non-circular column shapes shall be drilled and bolted.
- Only percussion drilling methods shall be allowed on bridge columns, and only for small diameter resin bonded anchor installation (0.50″ diameter max.). Drilling will normally result in blind holes, and these holes shall be patched with material conforming to Standard Specification 6-02.3(20).
- Drilling into prestressed or post-tensioned concrete elements is not permitted. Some WSDOT bridges utilize prestressed columns.

Any proposed conduit installation on a WSDOT bridge structure needs to be reviewed and approved by the Risk Reduction Engineer in the Bridge Preservation Office. If the conduit installation originates via a change order, then the Headquarters Construction Office may provide approval, and shall inform the Risk Reduction Engineer of the decision.

10.9.1 Utility Review Checklist

This checklist applies to all proposed utility attachments to existing bridges.

1. Complete cursory check to become familiar with the proposal.
2. Determine location of existing utilities.
   a. Check Bridge Inspection Report for any existing utilities.
   b. Check Bridge Preservation's utility file for any existing utility permits or franchises and possible as-built plans.
   c. Any existing utilities on the same side of the structure as the proposed utility should be shown on the proposal.
3. Review the following with all comments in red:
   a. Layout that includes dimension, directions, SR number and bridge number.
   b. Adequate spacing of supports.
   c. Adequate strength of supports as attached to the bridge (calculations may be necessary).
   d. Maximum design pressure and regular operating pressure for pressure pipe systems.
   e. Adequate lateral bracing and thrust protection for pressure pipe systems.
   f. Does the utility obstruct maintenance or accessibility to key bridge components?
   g. Check location (elevation and plan view) of the utility with respect to pier footings or abutments. If trench limits encroach within the 45° envelope from the footing edge, consult the Materials Lab.
   h. Force mains or water flow systems may require encasement if they are in excavations below the bottom of a footing.
4. Write a letter of reply or e-mail to the Region so a copy will be returned to you indicating the package has been accepted and sent out.
5. Stamp and date the plans using the same date as shown on the letter of reply or e-mail.
6. Create a file folder with the following information:
   a. Bridge no., name, utility company or utility type, and franchise or permit number.
   b. One set of approved plans and possibly one or two pages of the original design plans if necessary for quick future reference. Previous transmittals and plans not approved or returned to correction should be discarded to avoid unnecessary clutter of the files.
   c. Include the letter of submittal and a copy of the letter of reply or e-mail after it has been accepted.
7. Give the complete package to the section supervisor for review and place the folder in the utility file after the review.

10.10 Resin Bonded Anchors

WSDOT allows standard set resin bonded anchors in many aspects of bridge design, including the permanent sustained tension applications listed below.

- Sign structures mounted to the sides of bridges.
- Light standards.
- Retrofitted corbels for bridge approach slabs.
- Bridge widenings, for both the decks and for pier caps.
- Supporting utilities under bridges, including water pipes, electrical conduit and other utility piping systems.

Fast set epoxy anchors shall not be used for resin bonded anchors.

10.11 Drainage Design

Even though it is rare that poor drainage is directly responsible for a structural failure, it still must be a primary consideration in the design. Poor drainage can cause problems such as ponding on the roadway, erosion of abutments, and deterioration of structural members. Collecting the runoff and transporting it away from the bridge can prevent most of the problems. Proper geometrics during the preliminary stage is essential in order to accomplish this. The Hydraulics Branch recommends placing the bridge deck drainage off of the structure. Therefore, the Bridge Design Section has adopted the policy that all expansion joints will be watertight.

Geometrics – Bridges should have adequate transverse and longitudinal slopes to allow the water to run quickly to the drains. A transverse slope of .02′/ft and longitudinal slope of 0.5% for minimum valves are adequate. Avoid placing sag vertical curves and superelevation crossovers on the structure that could result in hydroplaning conditions or, in cold climates, sheets of ice from melting snow. The use of unsymmetrical vertical curves may assist the designer in shifting the low point off the structure.

Hydrology – Hydrological calculations are made using the rational equation. A 10-year storm event with a 5-minute duration is the intensity used for all inlets except for sag vertical curves where a 50-year storm intensity is required.

On Bridge Systems – Where bridge length and geometry require a bridge drain system within the bridge, the first preference is to place 5-inch diameter pipe drains that have no bars and drop straight to the ground. At other times, such as for steel structures, the straight drop drain is unacceptable and a piping system with bridge drains is required. The minimum pipe diameter should be 6 inches with no sharp bends within the system. The Hydraulics Branch should be contacted to determine the type of drain required (preferably Neenah).

Construction – Bridge decks have a striated finish in accordance with the *Standard Specifications* listed below, however, the gutters have an untextured finish (steel trowel) for a distance of 2 feet from the curb. This untextured area provides for smooth gutter flow and a Manning *n* value of .015 in the design.

Standard Specification Section 6-02.3(10) — Bridge Decks and Bridge Approach Slabs

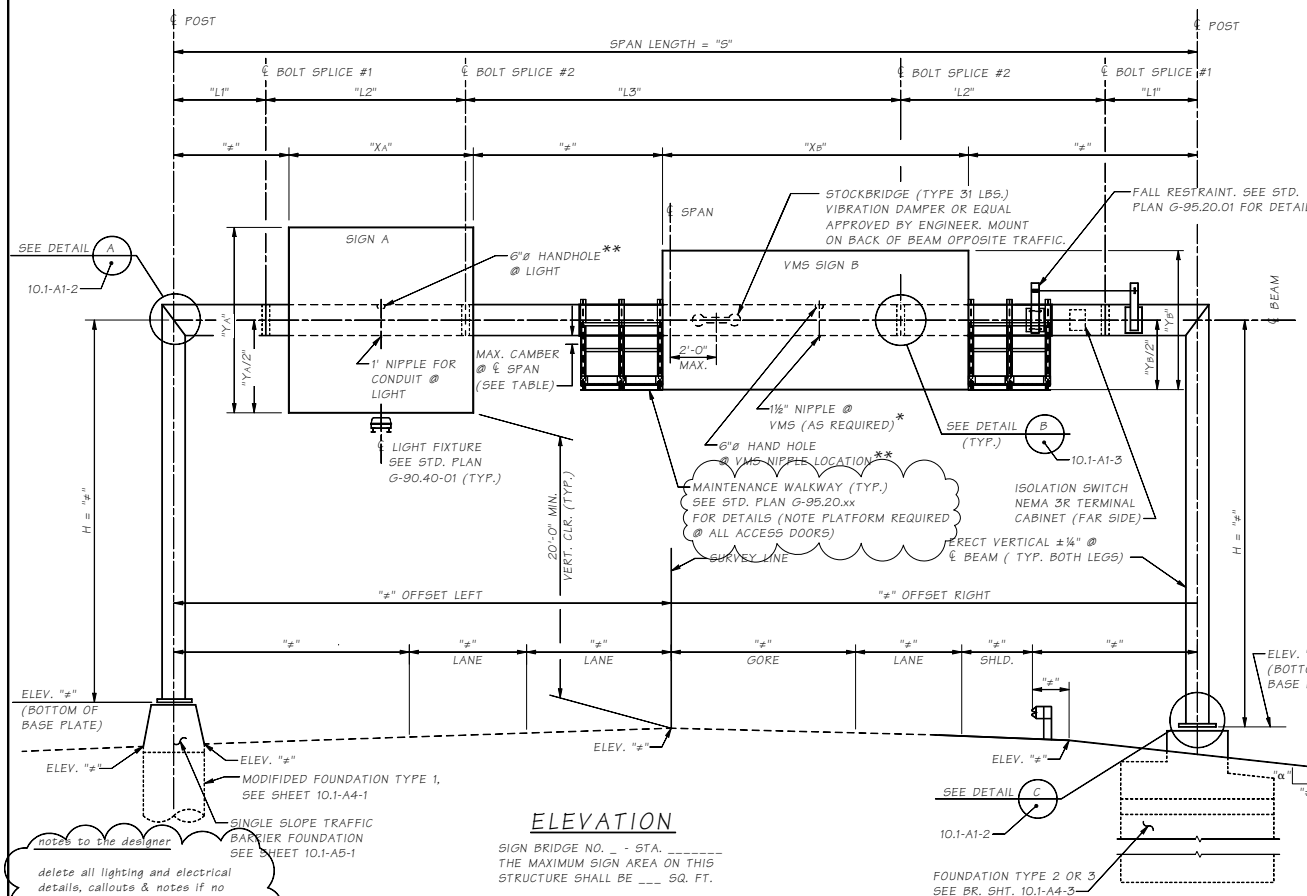

ELEVATION

SIGN BRIDGE NO. _ - STA. _____
THE MAXIMUM SIGN AREA ON THIS STRUCTURE SHALL BE ___ SQ. FT.

notes to the designer

delete all lighting and electrical details, callouts & notes if no electrical items required on the sign structure, except conduit in foundation.

existing roadway lines dashed and new roadway is solid.

"≠" is shown where dimensions are required.

remove notes that are not applicable.

xx check for the lastest version number.

* CONTRACTOR TO VERIFY NIPPLE LOCATION TO MATCH VMS SIGN CONDUIT LOCATIONS, PRIOR TO SIGN STRUCTURE FABRICATION. NO FIELD WELDING & DRILLING SHALL BE PERMITTED.

** HAND HOLE IS ONLY REQUIRED IF NIPPLE LOCATION IS GREATER THAN 1'-6" FROM ANOTHER HAND HOLE LOCATION.

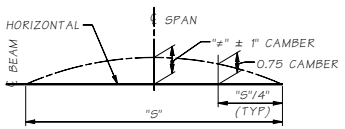

BEAM CAMBER DIAGRAM

LEGEND

B / 15 — IDENTIFIES SECTION, VIEW OR DETAIL TAKEN OR SHOWN ON BRIDGE SHEET 15

B / — TAKEN OR SHOWN ON THE SAME SHEET

GENERAL NOTES

1. ALL MATERIAL AND WORKMANSHIP SHALL BE IN ACCORDANCE WITH THE REQUIREMENTS OF THE WASHINGTON STATE DEPARTMENT OF TRANSPORTATION STANDARD SPECIFICATIONS FOR ROAD, BRIDGE, AND MUNICIPAL CONSTRUCTION DATED 200_ AND AMENDMENTS.
2. THE SIGN STRUCTURES DESIGN AND ANALYSIS HAS BEEN DONE IN ACCORDANCE WITH AASHTO STANDARD SPECIFICATIONS FOR STRUCTURAL SUPPORTS FOR HIGHWAY SIGNS, LUMINAIRES AND TRAFFIC SIGNALS - FOURTH EDITION - DATED 200_ AND INTERIMS, USING BASIC WIND SPEED OF 90 MPH AND 50 YEARS OF DESIGN LIFE. FATIGUE DESIGN OF THE STRUCTURE CONFORMS TO FATIGUE CATEGORY 1 OF THE SPECIFIED AASHTO STANDARD SPECIFICATIONS.
3. ALL BUTT JOINT WELDS SHALL BE FULL PENETRATION GROOVE WELDS WITH BACK-UP PLATES OF ¼" MIN. THICKNESS.
4. THE BACK-UP PLATES FOR ALL FULL PENETRATION WELDS SHALL BE WELDED CONTINUOUSLY TO THE JOINED PIECES. THIS CAN BE DONE BY EITHER A CONTINUOUS FILLET WELD ON THE BACK SIDE OF THE PIECE, OR BY A CONTINUOUS WELD IN THE ROOT OF THE FULL PENETRATION WELD, UNLESS OTHERWISE NOTED.
5. ALL BOLTS, RODS, AND RELATED HARDWARE SHALL BE GALVANIZED AFTER FABRICATION PER AASHTO M 232.
6. STEEL SURFACES SHALL BE GALVANIZED AFTER FABRICATION IN ACCORDANCE WITH AASHTO M 111. ALL EXTERIOR STEEL SURFACES SHALL BE PAINTED IN ACCORDANCE WITH THE SPECIAL PROVISIONS.
7. SIGN PANELS AS SHOWN IN THE CONTRACT PLANS SHALL BE INSTALLED WITH THE SIGN STRUCTURE OR IMMEDIATELY AFTER THE SIGN STRUCTURE IS ERECTED.
8. FABRICATE BEAM TO PROVIDE SMOOTH PARABOLIC CAMBER CURVE. SEE CAMBER DIAGRAM. DO NOT SHIM AT BOLTED SPLICES.
9. FABRICATE POST STRAIGHT.
10. MATERIALS SPECIFICATIONS:

ALL STRUCTURAL STEEL EXCEPT AS OTHERWISE NOTED	ASTM A 572 GR. 50 OR ASTM A 588
ANCHOR RODS	ASTM F 1554 GR. 105
HANDHOLE COVER SCREWS	ASTM F 593 GR. 1
SPLICE BOLTS	AASHTO M 164
SIGN BRACKET RODS	ASTM A 307
MOUNTING BEAM BOLTS	AASHTO M 164
COVER PLATES	ASTM A 36

11. BOTTOM OF BASE PLATE ELEVATIONS AND POST HEIGHTS SHOWN ARE APPROXIMATE. THE CONTRACTOR SHALL FIELD MEASURE ANCHOR ROD LOCATIONS, ELEVATIONS, CLEARANCES AND ALL STEEL STRUCTURE DIMENSIONS, AND SUBMIT TO ENGINEER FOR APPROVAL PRIOR TO FABRICATION.
12. POSTS, BASE PLATES, BEAMS AND SPLICE PLATES ARE MAIN LOAD CARRYING TENSILE MEMBERS OR TENSION COMPONENTS OF FLEXURAL MEMBERS AND SHALL MEET THE LONGITUDINAL CHARPY V-NOTCH TEST AS DESCRIBED IN SECTION 6-03.2 FOR AASHTO M 270 MATERIAL. NON-DESTRUCTIVE TEST ACCEPTANCE CRITERIA TO CONFORM TO TENSILE MEMBERS WITH CYCLIC LOAD.
13. SEE OTHER PLANS FOR CONDUIT PENETRATIONS AND HAND HOLES. REFER TO ELECTRICAL PLANS FOR INTERNAL ROUTING OF CONDUCTORS. CONDUIT CONDUCTORSSHALL NOT BE ATTACHED TO THE OUTSIDE OF THE SIGN STRUCTURE. ISOLATIONS WITCH SHALL BE LOCATED NEAR THE SHOULDER OF ROADWAY ON THE OPPOSITESIDE OF THE BEAM AS THE SIGNS. SEE NEMA 3R TERMINAL CABINET DETAIL ON SHEET 10.1-A2-2.
14. THE MAXIMUM SIGN AREA ON THE STRUCTURE SHALL BE AS NOTED.
15. FOR SIGN AND LIGHT ATTACHMENT BRACKET DETAILS FOR MONOTUBES SEE STANDARD PLAN G-90.20-xx. PAINT ENTIRE ATTACHMENT BRACKET TO MATCH EXISTING STRUCTURE EXCEPT FOR MOUNTING BEAM, SIGN, LIGHT, BEAM LENGTHS, SIZE AND SPACING SHALL BE DETERMINED FROM THE CONTRACT PLANS OR THE STANDARD PLANS. VARIABLE MESSAGE SIGNS SHALL HAVE MOUNTING BEAMS @ 3'-0" MAXIMUM.

Bridge Design Engr.	M:\STANDARDS\Sign Bridges\MT_SIGN_BRIDGE_LAYOUT.MAN			REGION NO.	STATE	FED. AID PROJ. NO.	SHEET NO.	TOTAL SHEETS
Supervisor				10	WASH.			
Designed By				JOB NUMBER				
Checked By								
Detailed By								
Bridge Projects Engr.								
Prelim. Plan By								
Architect/Specialist	DATE	REVISION	BY	APP'D				

BRIDGE AND STRUCTURES OFFICE

Washington State Department of Transportation

STANDARD SIGN BRIDGES

MONOTUBE SIGN BRIDGE LAYOUT

BRIDGE SHEET NO. — SHEET — OF — SHEETS

SR — JOB NO. 10.1-A1-1 — SHEET

Fri Sep 03 09:42:23 2010

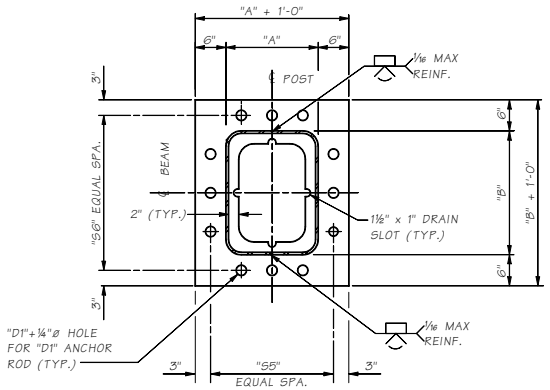

SECTION E

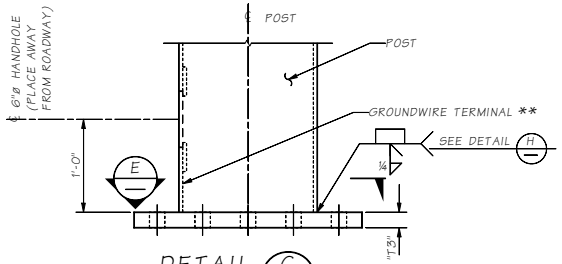

DETAIL C
POST BASE
10.1-A1-1

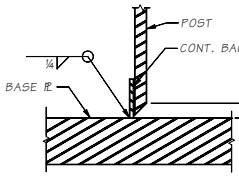

DETAIL H

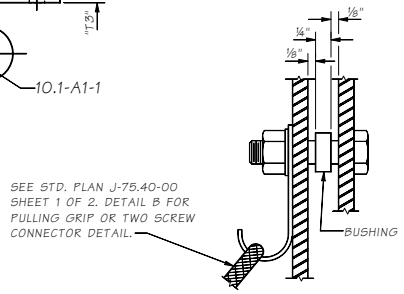

DETAIL G

** SEE STD PLAN J-75.40-00 SHEET 1 OF 2 DETAIL C FOR GROUND CONNECTION.

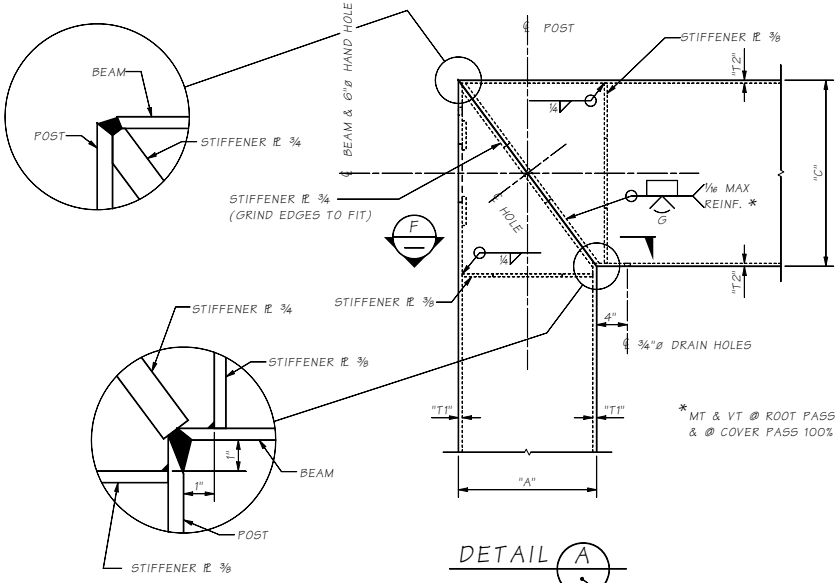

DETAIL A
10.1-A1-1

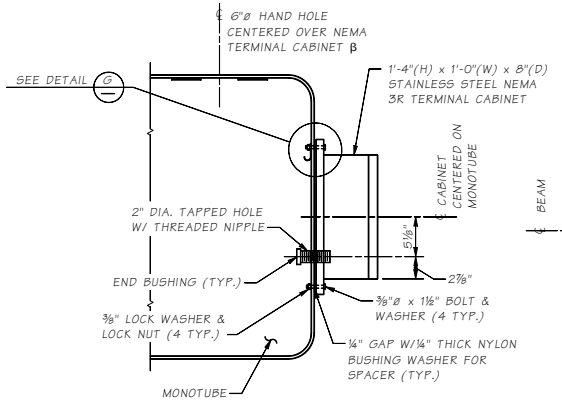

NEMA 3R TERMINAL CABINET DETAIL

β IF NO OTHER HAND HOLE IS WITHIN 1'-6" OF CABINET

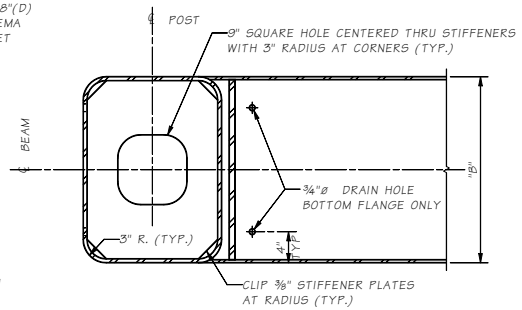

SECTION F
DIAGONAL STIFFENER NOT SHOWN.

Bridge Design Engr.	M:\STANDARDS\Sign Bridges\MT_SIGN_BRIDGE_STRUCT_DETAILS_1.MAN				REGION NO.	STATE	FED. AID PROJ. NO.	SHEET NO.	TOTAL SHEETS
Supervisor					10	WASH.			
Designed By					JOB NUMBER				
Checked By									
Detailed By									
Bridge Projects Engr.									
Prelim. Plan By									
Architect/Specialist	DATE	REVISION	BY	APP'D					

BRIDGE AND STRUCTURES OFFICE

Washington State Department of Transportation

STANDARD SIGN BRIDGES

MONOTUBE SIGN BRIDGE STRUCTURAL DETAILS 1

BRIDGE SHEET NO. | SHEET | OF | SHEETS

SHEET 10.1-A1-2 JOB NO. SR

Fri Sep 03 09:42:26 2010

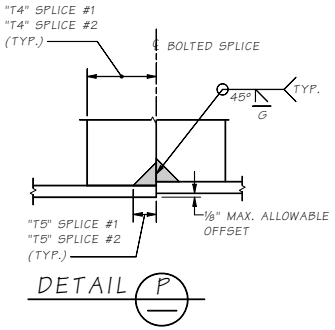

DETAIL P

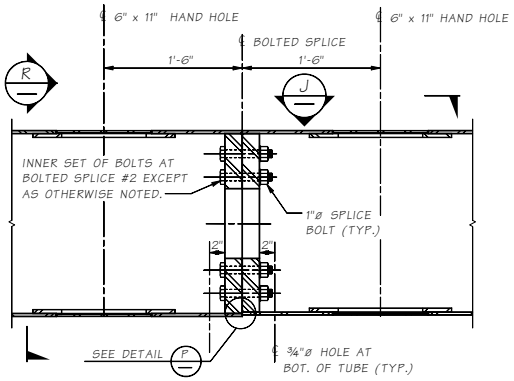

DETAIL B

SECTION THRU BEAM
BOLTED SPLICE #2 SHOWN.
BOLTED SPLICE #1 SIMILAR.

10.1-A1-1

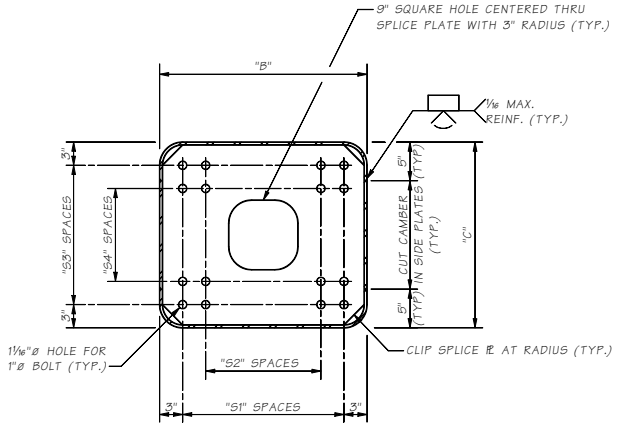

SECTION R

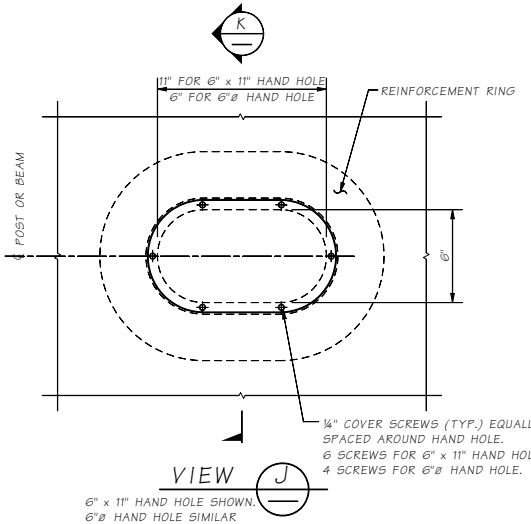

VIEW J

6" x 11" HAND HOLE SHOWN.
6"ø HAND HOLE SIMILAR
EXCEPT AS NOTED.

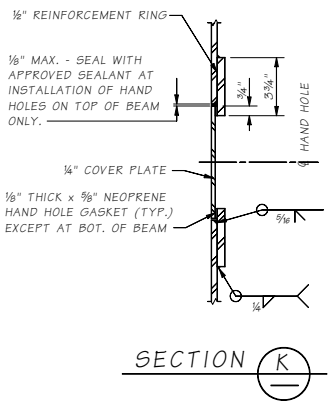

SECTION K

Bridge Design Engr.	M:\STANDARDS\Sign Bridges\MT_SIGN_BRIDGE_STRUCT_DETAILS_2.MAN					REGION NO.	STATE	FED. AID PROJ. NO.	SHEET NO.	TOTAL SHEETS
Supervisor						10	WASH.			
Designed By						JOB NUMBER				
Checked By										
Detailed By										
Bridge Projects Engr.										
Prelim. Plan By										
Architect/Specialist	DATE	REVISION		BY	APP'D					

BRIDGE AND STRUCTURES OFFICE

Washington State Department of Transportation

STANDARD SIGN BRIDGES

MONOTUBE SIGN BRIDGE STRUCTURAL DETAILS 2

BRIDGE SHEET NO.

SHEET OF SHEETS

SR JOB NO. 10.1-A1-3 SHEET

Fri Sep 03 09:42:28 2010

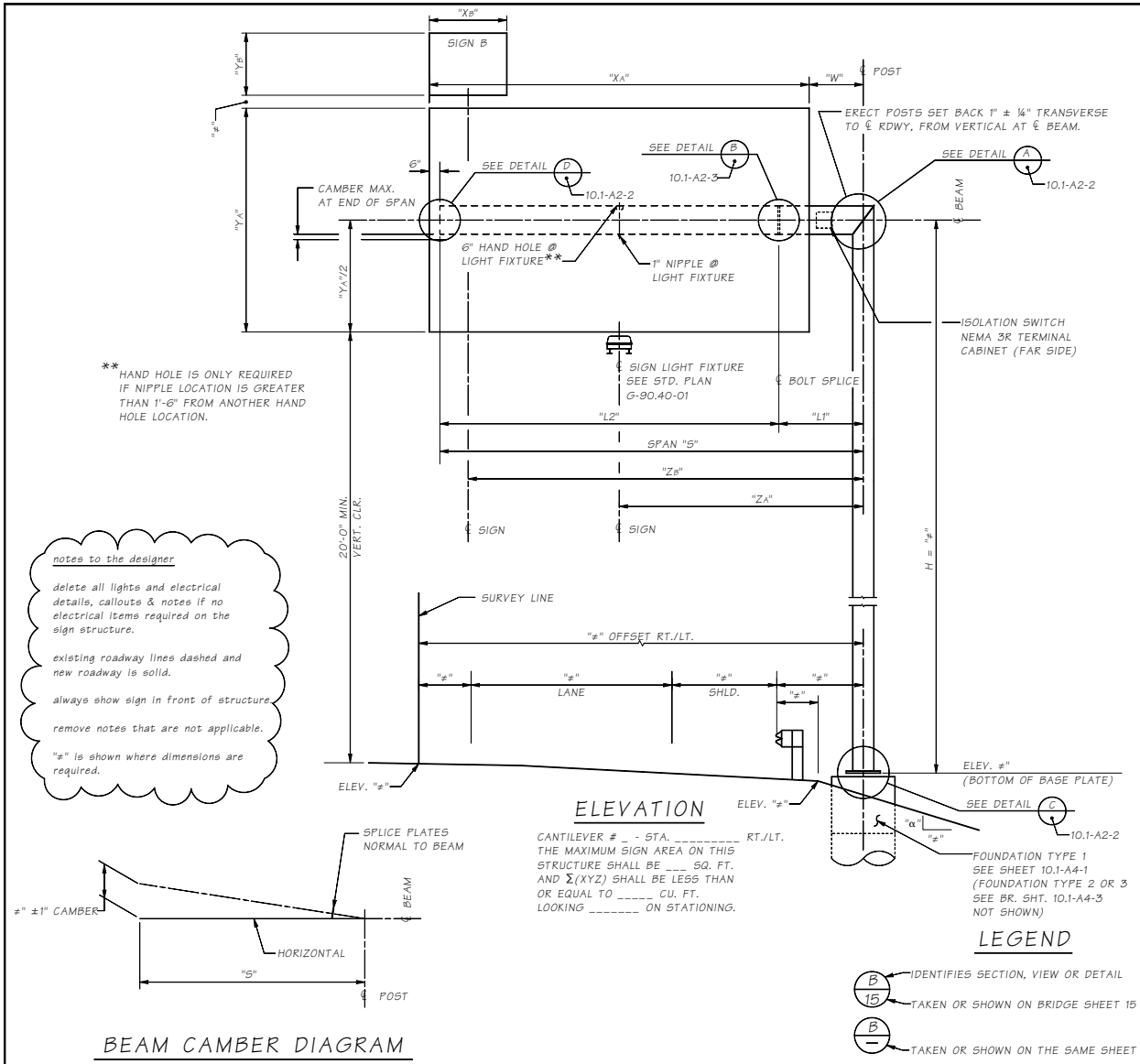

ELEVATION

CANTILEVER # _ - STA. _____ RT./LT.
THE MAXIMUM SIGN AREA ON THIS STRUCTURE SHALL BE ___ SQ. FT. AND Σ(XYZ) SHALL BE LESS THAN OR EQUAL TO _____ CU. FT.
LOOKING _____ ON STATIONING.

BEAM CAMBER DIAGRAM

LEGEND

B / 15 — IDENTIFIES SECTION, VIEW OR DETAIL
TAKEN OR SHOWN ON BRIDGE SHEET 15
B / — TAKEN OR SHOWN ON THE SAME SHEET

GENERAL NOTES

1. ALL MATERIAL AND WORKMANSHIP SHALL BE IN ACCORDANCE WITH THE REQUIREMENTS OF THE WASHINGTON STATE DEPARTMENT OF TRANSPORTATION STANDARD SPECIFICATIONS FOR ROAD, BRIDGE, AND MUNICIPAL CONSTRUCTION DATED 200_ AND AMENDMENTS.
2. THE SIGN STRUCTURES DESIGN AND ANALYSIS HAS BEEN DONE IN ACCORDANCE WITH AASHTO STANDARD SPECIFICATIONS FOR STRUCTURAL SUPPORTS FOR HIGHWAY SIGNS, LUMINAIRES AND TRAFFIC SIGNALS - FOURTH EDITION - DATED 200_ AND INTERIMS, USING BASIC WIND SPEED OF 90 MPH AND 50 YEARS OF DESIGN LIFE. FATIGUE DESIGN OF THE STRUCTURE CONFORMS TO FATIGUE CATEGORY 1 OF THE SPECIFIED AASHTO STANDARD SPECIFICATIONS.
3. ALL BUTT JOINT WELDS SHALL BE FULL PENETRATION GROOVE WELDS WITH BACK-UP PLATES OF ¼" MIN. THICKNESS.
4. THE BACK-UP PLATES FOR ALL FULL PENETRATION WELDS SHALL BE WELDED CONTINUOUSLY TO THE JOINED PIECES. THIS CAN BE DONE BY EITHER A CONTINUOUS FILLET WELD ON THE BACK SIDE OF THE PIECE, OR BY A CONTINUOUS WELD IN THE ROOT OF THE FULL PENETRATION WELD, UNLESS OTHERWISE NOTED.
5. ALL BOLTS, RODS, AND RELATED HARDWARE SHALL BE GALVANIZED AFTER FABRICATION PER AASHTO M 232.
6. STEEL SURFACES SHALL BE GALVANIZED AFTER FABRICATION IN ACCORDANCE WITH AASHTO M 111. ALL EXTERIOR STEEL SURFACES SHALL BE PAINTED IN ACCORDANCE WITH THE SPECIAL PROVISIONS.
7. SIGN PANELS AS SHOWN IN THE CONTRACT PLANS SHALL BE INSTALLED WITH THE SIGN STRUCTURE OR IMMEDIATELY AFTER THE SIGN STRUCTURE IS ERECTED.
8. FABRICATE BEAM TO PROVIDE STRAIGHT CAMBER. SEE CAMBER DIAGRAM. DO NOT SHIM AT BOLTED SPLICES.
9. FABRICATE POST STRAIGHT.
10. MATERIALS SPECIFICATIONS:

ALL STRUCTURAL STEEL EXCEPT AS OTHERWISE NOTED	ASTM A 572 GR. 50 OR ASTM A 588
ANCHOR RODS	ASTM F 1554 GR. 105
HANDHOLE COVER SCREWS	ASTM F 593 GR. 1
SPLICE BOLTS	AASHTO M 164
SIGN BRACKET RODS	ASTM A 307
MOUNTING BEAM BOLTS	AASHTO M 164
COVER PLATES	ASTM A 36

11. BOTTOM OF BASE PLATE ELEVATIONS AND POST HEIGHTS SHOWN ARE APPROXIMATE. THE CONTRACTOR SHALL FIELD MEASURE ANCHOR ROD LOCATIONS, ELEVATIONS, CLEARANCES AND ALL STEEL STRUCTURE DIMENSIONS, AND SUBMIT TO ENGINEER FOR APPROVAL PRIOR TO FABRICATION.
12. POSTS, BASE PLATES, BEAMS AND SPLICE PLATES ARE MAIN LOAD CARRYING TENSILE MEMBERS OR TENSION COMPONENTS OF FLEXURAL MEMBERS AND SHALL MEET THE LONGITUDINAL CHARPY V-NOTCH TEST AS DESCRIBED IN SECTION 6-03.2 FOR AASHTO M 270 MATERIAL. NON-DESTRUCTIVE TEST ACCEPTANCE CRITERIA TO CONFORM TO TENSILE MEMBERS WITH CYCLIC LOAD.
13. SEE OTHER PLANS FOR CONDUIT PENETRATIONS AND HAND HOLES. REFER TO ELECTRICAL PLANS FOR INTERNAL ROUTING OF CONDUCTORS. CONDUIT CONDUCTORSSHALL NOT BE ATTACHED TO THE OUTSIDE OF THE SIGN STRUCTURE. ISOLATIONS WITCH SHALL BE LOCATED NEAR THE SHOULDER OF ROADWAY ON THE OPPOSITESIDE OF THE BEAM AS THE SIGNS. SEE NEMA 3R TERMINAL CABINET DETAIL ON SHEET 10.1-A2-2.
14. NO VMS ALLOWED ON CANTILEVER MONOTUBE SIGN STRUCTURES.
15. THE MAXIMUM SIGN AREA ON THE STRUCTURE SHALL BE AS NOTED.
16. FOR SIGN AND LIGHT ATTACHMENT BRACKET DETAILS FOR MONOTUBES SEE STANDARD PLAN G-90.20-00. PAINT ENTIRE ATTACHMENT BRACKET TO MATCH EXISTING STRUCTURE EXCEPT FOR MOUNTING BEAM. SIGN, LIGHT, BEAM LENGTHS, SIZE AND SPACING SHALL BE DETERMINED FROM THE CONTRACT PLANS OR THE STANDARD PLANS. VARIABLE MESSAGE SIGNS SHALL HAVE MOUNTING BEAMS @ 3'-0" MAXIMUM.
17. THE TOTAL BEAM LENGTH "S" SHALL NOT EXCEED 30'-0".

Bridge Design Engr.	M:\STANDARDS\Sign Bridges\MT_SIGN_BRIDGE_CANTILEVER_LO.MAN				REGION NO.	STATE	FED. AID PROJ. NO.	SHEET NO.	TOTAL SHEETS
Supervisor					10	WASH.			
Designed By					JOB NUMBER				
Checked By									
Detailed By									
Bridge Projects Engr.									
Prelim. Plan By									
Architect/Specialist	DATE	REVISION	BY	APP'D					

BRIDGE AND STRUCTURES OFFICE

Washington State Department of Transportation

STANDARD SIGN BRIDGES

MONOTUBE CANTILEVER LAYOUT

BRIDGE SHEET NO. — SHEET OF SHEETS

SR — JOB NO. 10.1-A2-1 — SHEET

Fri Sep 03 09:42:11 2010

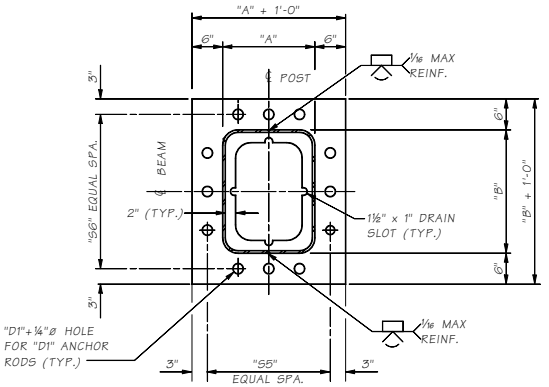

SECTION E

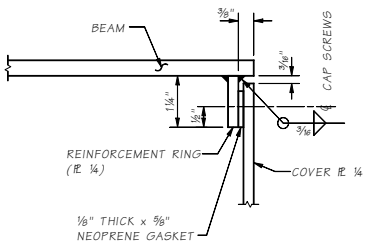

DETAIL D — 10.1-A2-1

FOR CANTILEVER STRUCTURES ONLY.
¼" CAP SCREWS ASTM F-593 ~ TAP REINFORCEMENT RING WITH 8 TOTAL EQUALLY SPACED AROUND COVER ℄

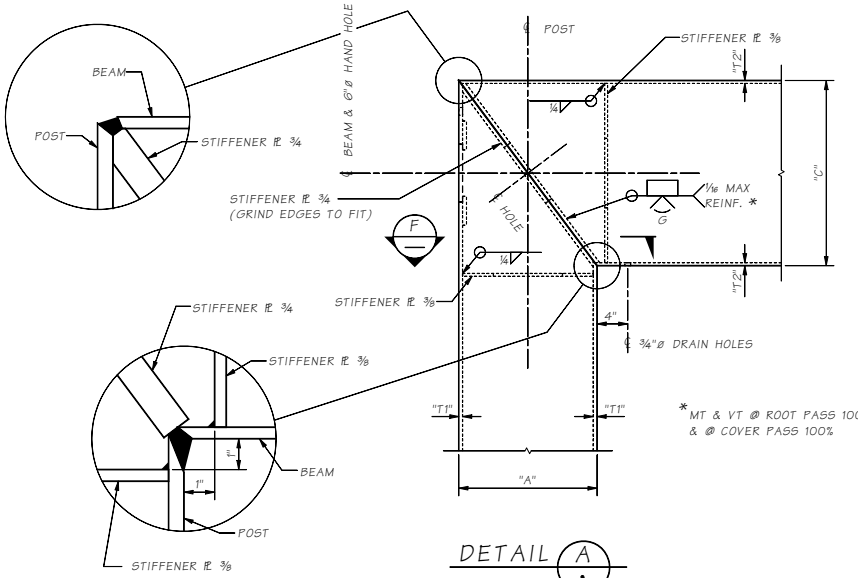

DETAIL A — 10.1-A2-1

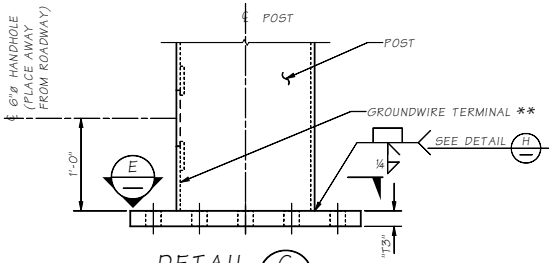

DETAIL C — POST BASE — 10.1-A2-1

** SEE STD PLAN J-75.40-00 SHEET 1 OF 2 DETAIL C FOR GROUND CONNECTION.

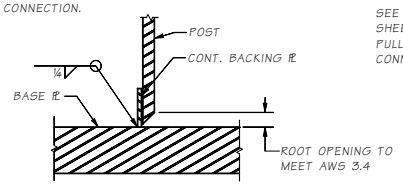

DETAIL H

SEE STD. PLAN J-75.40-00 SHEET 1 OF 2. DETAIL B FOR PULLING GRIP OR TWO SCREW CONNECTOR DETAIL.

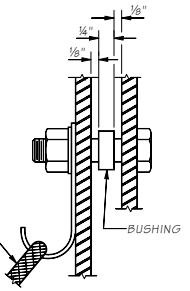

DETAIL G

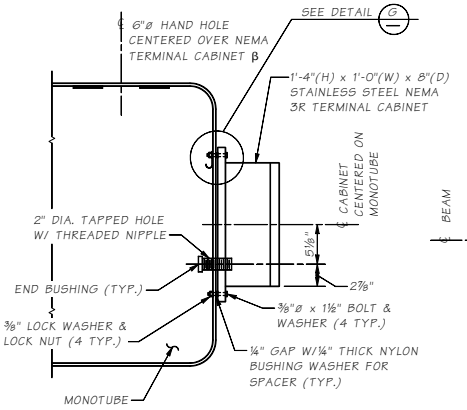

NEMA 3R TERMINAL CABINET DETAIL

β IF NO OTHER HAND HOLE IS WITHIN 1'-6" OF CABINET

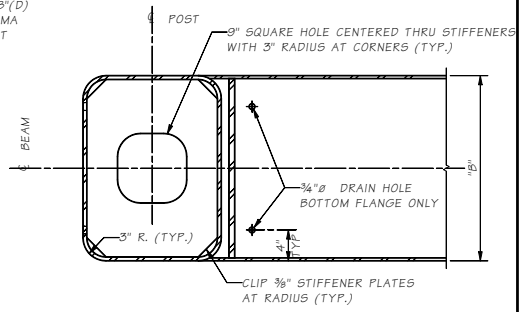

SECTION F

DIAGONAL STIFFENER NOT SHOWN.

Bridge Design Engr.	M:\STANDARDS\Sign Bridges\MT_CANT_STRUCT_DETAILS_1.MAN				REGION NO.	STATE	FED. AID PROJ. NO.	SHEET NO.	TOTAL SHEETS
Supervisor					10	WASH.			
Designed By					JOB NUMBER				
Checked By									
Detailed By									
Bridge Projects Engr.									
Prelim. Plan By									
Architect/Specialist	DATE	REVISION	BY	APP'D					

BRIDGE AND STRUCTURES OFFICE

Washington State Department of Transportation

STANDARD SIGN BRIDGES

MONOTUBE CANTILEVER STRUCTURAL DETAILS 1

BRIDGE SHEET NO. | SHEET | OF | SHEETS

SR | JOB NO. | SHEET
10.1-A2-2

Fri Sep 03 09:41:56 2010

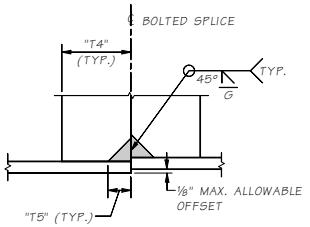

DETAIL P

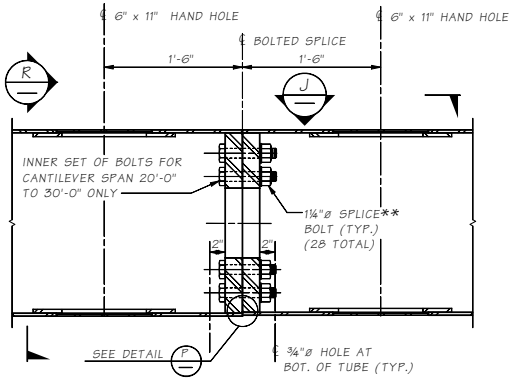

DETAIL B
SECTION THRU BEAM
10.1-A2-1

** 20 ~ 1"ø SPLICE BOLT FOR CANTILEVER SPAN LESS THAN 20'-0"

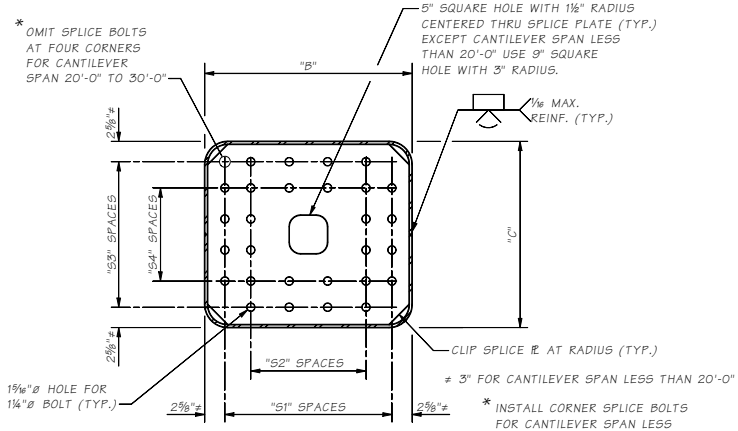

SECTION R

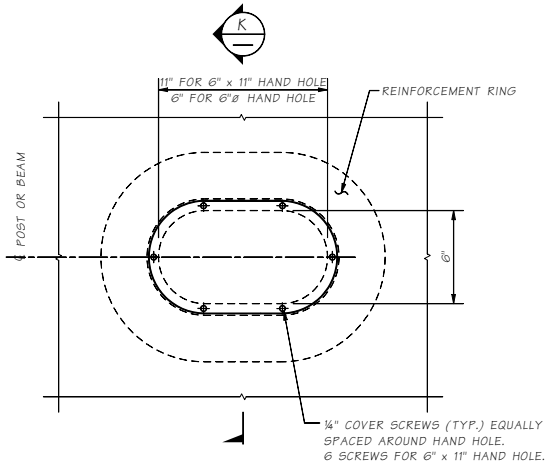

VIEW J
6" x 11" HAND HOLE SHOWN.
6"ø HAND HOLE SIMILAR EXCEPT AS NOTED.

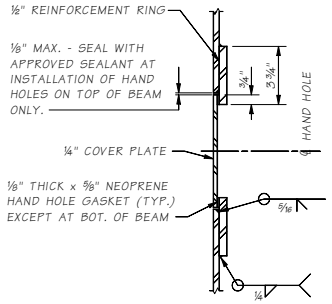

SECTION K

Bridge Design Engr.	M:\STANDARDS\Sign Bridges\MT_CANT_STRUCT_DETAILS_2.MAN				REGION NO.	STATE	FED. AID PROJ. NO.	SHEET NO.	TOTAL SHEETS
Supervisor					10	WASH.			
Designed By					JOB NUMBER				
Checked By									
Detailed By									
Bridge Projects Engr.									
Prelim. Plan By									
Architect/Specialist	DATE	REVISION	BY	APP'D					

BRIDGE AND STRUCTURES OFFICE

Washington State Department of Transportation

STANDARD SIGN BRIDGES

MONOTUBE CANTILEVER STRUCTURAL DETAILS 2

BRIDGE SHEET NO.
SHEET OF SHEETS

SHEET
10.1-A2-3
JOB NO.
SR

Fri Sep 03 09:41:59 2010

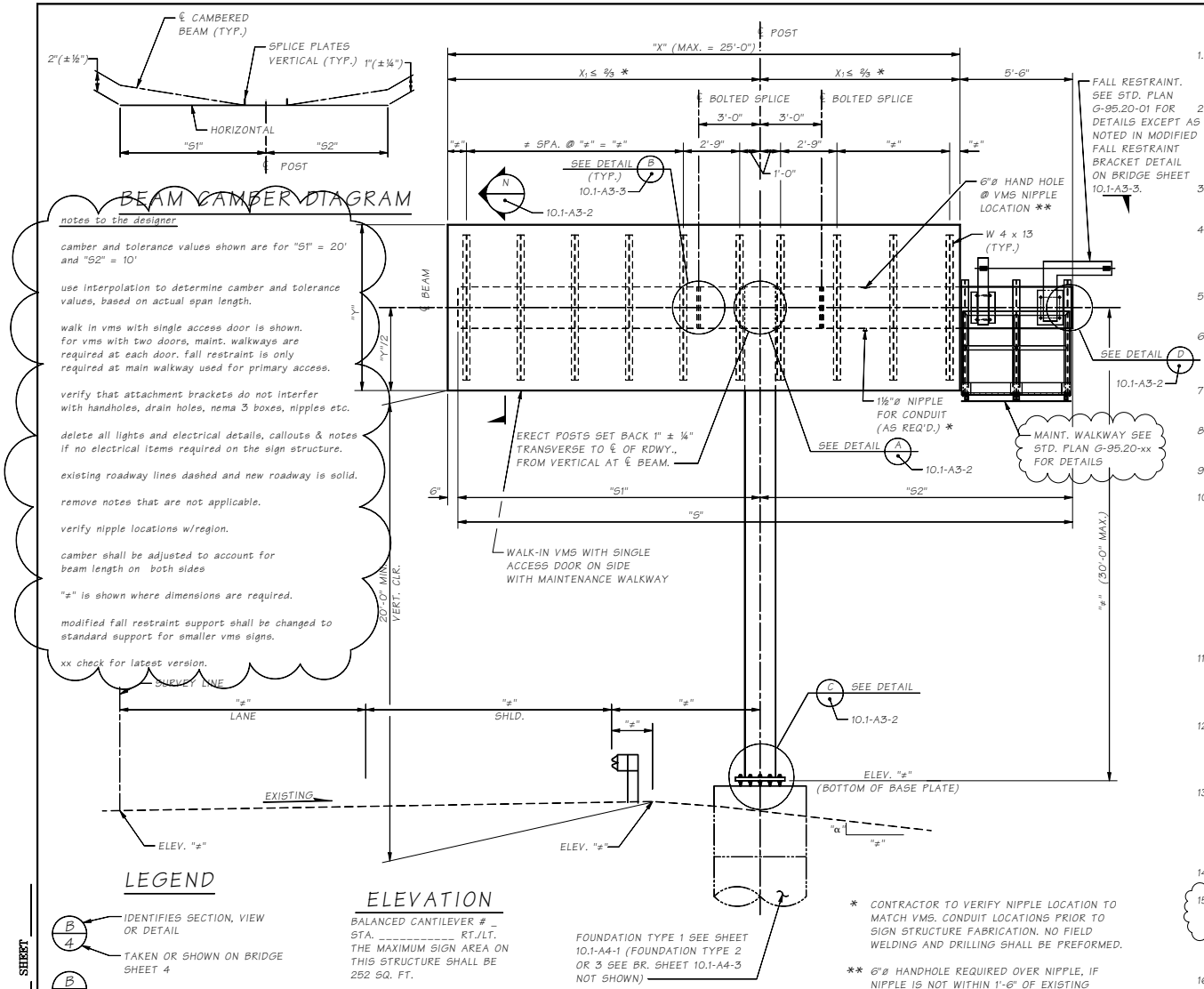

BEAM CAMBER DIAGRAM

notes to the designer

camber and tolerance values shown are for "S1" = 20' and "S2" = 10'

use interpolation to determine camber and tolerance values, based on actual span length.

walk in vms with single access door is shown. for vms with two doors, maint. walkways are required at each door. fall restraint is only required at main walkway used for primary access.

verify that attachment brackets do not interfer with handholes, drain holes, nema 3 boxes, nipples etc.

delete all lights and electrical details, callouts & notes if no electrical items required on the sign structure.

existing roadway lines dashed and new roadway is solid.

remove notes that are not applicable.

verify nipple locations w/region.

camber shall be adjusted to account for beam length on both sides

"≠" is shown where dimensions are required.

modified fall restraint support shall be changed to standard support for smaller vms signs.

xx check for latest version.

LEGEND

B/4 — IDENTIFIES SECTION, VIEW OR DETAIL
TAKEN OR SHOWN ON BRIDGE SHEET 4

B/— TAKEN OR SHOWN ON THE SAME SHEET

ELEVATION

BALANCED CANTILEVER # _ STA. _____ RT./LT. THE MAXIMUM SIGN AREA ON THIS STRUCTURE SHALL BE 252 SQ. FT.

FOUNDATION TYPE 1 SEE SHEET 10.1-A4-1 (FOUNDATION TYPE 2 OR 3 SEE BR. SHEET 10.1-A4-3 NOT SHOWN)

* CONTRACTOR TO VERIFY NIPPLE LOCATION TO MATCH VMS. CONDUIT LOCATIONS PRIOR TO SIGN STRUCTURE FABRICATION. NO FIELD WELDING AND DRILLING SHALL BE PREFORMED.

** 6"ø HANDHOLE REQUIRED OVER NIPPLE, IF NIPPLE IS NOT WITHIN 1'-6" OF EXISTING HANDHOLE.

GENERAL NOTES

1. ALL MATERIAL AND WORKMANSHIP SHALL BE IN ACCORDANCE WITH THE REQUIREMENTS OF THE WASHINGTON STATE DEPARTMENT OF TRANSPORTATION STANDARD SPECIFICATIONS FOR ROAD, BRIDGE, AND MUNICIPAL CONSTRUCTION DATED 200_ AND AMENDMENTS.
2. THE SIGN STRUCTURES DESIGN AND ANALYSIS HAS BEEN DONE IN ACCORDANCE WITH AASHTO STANDARD SPECIFICATIONS FOR STRUCTURAL SUPPORTS FOR HIGHWAY SIGNS, LUMINAIRES AND TRAFFIC SIGNALS - FOURTH EDITION - DATED 200_ AND INTERIMS, USING BASIC WIND SPEED OF 90 MPH AND 50 YEARS OF DESIGN LIFE. FATIGUE DESIGN OF THE STRUCTURE CONFORMS TO FATIGUE CATEGORY 1 OF THE SPECIFIED AASHTO STANDARD SPECIFICATIONS.
3. ALL BUTT JOINT WELDS SHALL BE FULL PENETRATION GROOVE WELDS WITH BACK-UP PLATES OF ¼" MIN. THICKNESS.
4. THE BACK-UP PLATES FOR ALL FULL PENETRATION WELDS SHALL BE WELDED CONTINUOUSLY TO THE JOINED PIECES. THIS CAN BE DONE BY EITHER A CONTINUOUS FILLET WELD ON THE BACK SIDE OF THE PIECE, OR BY A CONTINUOUS WELD IN THE ROOT OF THE FULL PENETRATION WELD, UNLESS OTHERWISE NOTED.
5. ALL BOLTS, RODS, AND RELATED HARDWARE SHALL BE GALVANIZED AFTER FABRICATION PER AASHTO M 232.
6. STEEL SURFACES SHALL BE GALVANIZED AFTER FABRICATION IN ACCORDANCE WITH AASHTO M 111. ALL EXTERIOR STEEL SURFACES SHALL BE PAINTED IN ACCORDANCE WITH THE SPECIAL PROVISIONS.
7. SIGN PANELS AS SHOWN IN THE CONTRACT PLANS SHALL BE INSTALLED WITH THE SIGN STRUCTURE OR IMMEDIATELY AFTER THE SIGN STRUCTURE IS ERECTED.
8. FABRICATE BEAM TO PROVIDE STRAIGHT CAMBER. SEE CAMBER DIAGRAM. DO NOT SHIM AT BOLTED SPLICES.
9. FABRICATE POST STRAIGHT.
10. MATERIALS SPECIFICATIONS:

ALL STRUCTURAL STEEL EXCEPT AS OTHERWISE NOTED	ASTM A 572 GR. 50 OR ASTM A 588
ANCHOR RODS	ASTM F 1554 GR. 105
HANDHOLE COVER SCREWS	ASTM F 593 GR. 1
SPLICE BOLTS	AASHTO M 164
SIGN BRACKET RODS	ASTM A 307
MOUNTING BEAM BOLTS	AASHTO M 164
COVER PLATES	ASTM A 36

11. BOTTOM OF BASE PLATE ELEVATIONS AND POST HEIGHTS SHOWN ARE APPROXIMATE. THE CONTRACTOR SHALL FIELD MEASURE ANCHOR ROD LOCATIONS, ELEVATIONS, CLEARANCES AND ALL STEEL STRUCTURE DIMENSIONS, AND SUBMIT TO ENGINEER FOR APPROVAL PRIOR TO FABRICATION.

    POSTS, BASE PLATES, BEAMS AND SPLICE PLATES ARE MAIN LOAD CARRYING
12. TENSILE MEMBERS OR TENSION COMPONENTS OF FLEXURAL MEMBERS AND SHALL MEET THE LONGITUDINAL CHARPY V-NOTCH TEST AS DESCRIBED IN SECTION 6-03.2 FOR AASHTO M 270 MATERIAL. NON-DESTRUCTIVE TEST ACCEPTANCE CRITERIA TO CONFORM TO TENSILE MEMBERS WITH CYCLIC LOAD.
13. SEE OTHER PLANS FOR CONDUIT PENETRATIONS AND HAND HOLES. REFER TO ELECTRICAL PLANS FOR INTERNAL ROUTING OF CONDUCTORS. CONDUIT CONDUCTORSSHALL NOT BE ATTACHED TO THE OUTSIDE OF THE SIGN STRUCTURE. ISOLATIONS WITCH SHALL BE LOCATED NEAR THE SHOULDER OF ROADWAY ON THE OPPOSITESIDE OF THE BEAM AS THE SIGNS. SEE NEMA 3R TERMINAL CABINET DETAIL ON SHEET 10.1-A2-2.
14. THE MAXIMUM SIGN AREA ON THE STRUCTURE SHALL BE AS NOTED.
15. FOR SIGN AND LIGHT ATTACHMENT BRACKET DETAILS FOR MONOTUBES SEE STANDARD PLAN G-90.20-xx. PAINT ENTIRE ATTACHMENT BRACKET TO MATCH EXISTING STRUCTURE EXCEPT FOR MOUNTING BEAM. SIGN, BEAM LENGTHS, AND SIZE SHALL BE DETERMINED FROM THE STANDARD PLANS. SPACING SHALL BE DETERMINED FROM THE CONTRACT PLANS. VARIABLE MESSAGE SIGNS SHALL HAVE MOUNTING BEAMS @ 3'-0" MAXIMUM.
16. THE TOTAL BEAM LENGTH "S" SHALL NOT EXCEED 30'-0".

Bridge Design Engr.	M:\STANDARDS\Sign Bridges\Mt_CANTILEVER_T_LAYOUT.MAN				REGION NO.	STATE	FED. AID PROJ. NO.	SHEET NO.	TOTAL SHEETS	BRIDGE AND STRUCTURES OFFICE
Supervisor					10	WASH.				Washington State Department of Transportation
Designed By					JOB NUMBER					STANDARD SIGN BRIDGES
Checked By										MONOTUBE BALANCED CANTILEVER LAYOUT
Detailed By										BRIDGE SHEET NO. 10.1-A3-1
Bridge Projects Engr.										SHEET OF SHEETS
Prelim. Plan By										
Architect/Specialist	DATE	REVISION	BY	APP'D						

SR FILE NO. SHEET 10.1-A3-1

Fri Sep 03 09:42:07 2010

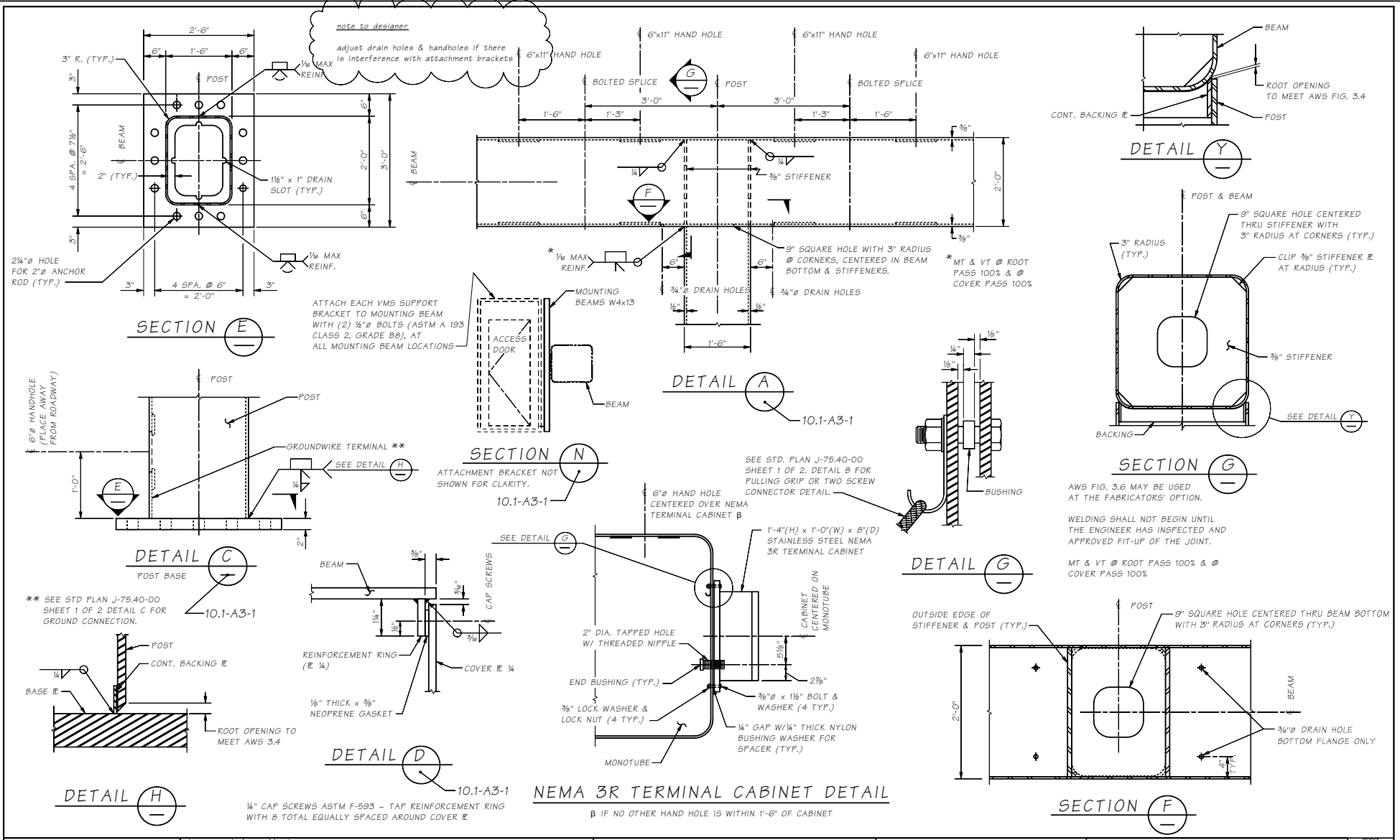

Bridge Design Engr.	M:\STANDARDS\Sign Bridges\MT_CANTILEVER_T_DETAILS_1.MAN				REGION NO.	STATE	FED. AID PROJ. NO.	SHEET NO.	TOTAL SHEETS
Supervisor					10	WASH.			
Designed By					JOB NUMBER				
Checked By									
Detailed By									
Bridge Projects Engr.									
Prelim. Plan By									
Architect/Specialist	DATE	REVISION	BY	APP'D					

BRIDGE AND STRUCTURES OFFICE

Washington State Department of Transportation

STANDARD SIGN BRIDGES

MONOTUBE BALANCED CANTILEVER STRUCTURAL DETAILS 1

BRIDGE SHEET NO. | SHEET | OF | SHEETS

FILE NO. SHEET
SR 10.1-A3-2

Fri Sep 03 09:42:01 2010

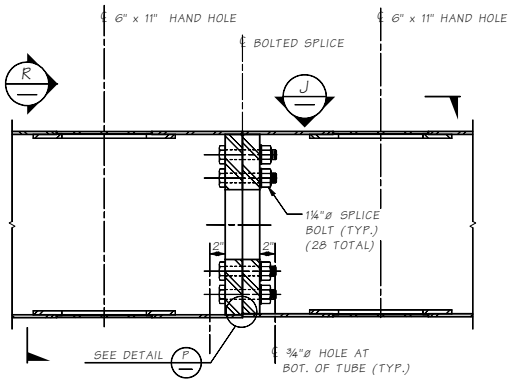

DETAIL B
SECTION THRU BEAM
10.1-A3-1

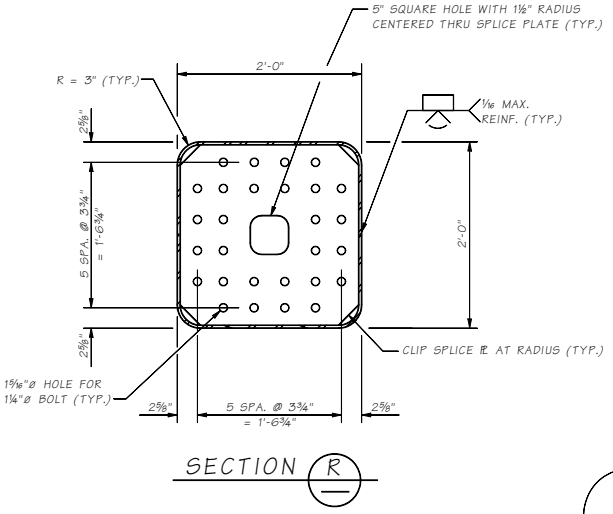

SECTION R

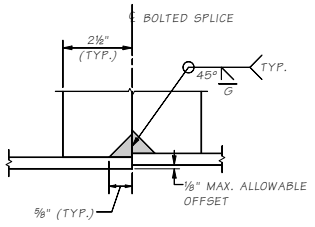

DETAIL P

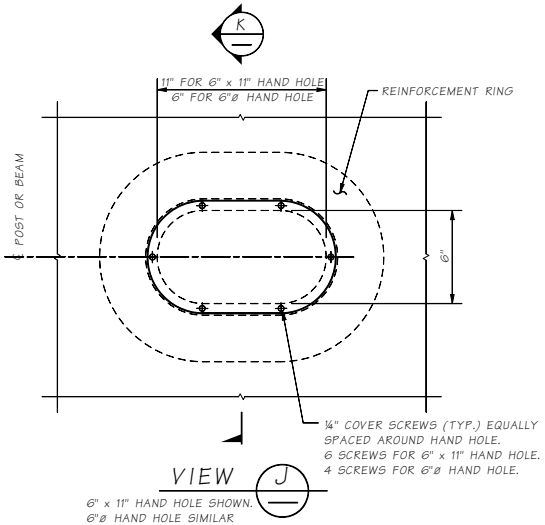

VIEW J
6" x 11" HAND HOLE SHOWN.
6"ø HAND HOLE SIMILAR EXCEPT AS NOTED.

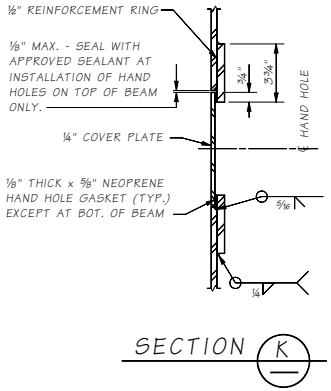

SECTION K

note to designer
remove modified fall restraint bracket detail if smaller vms sign is used & std plan fall retraint is used.

** DRILL 1½"ø HOLE IN CENTER OF STIFFENER.

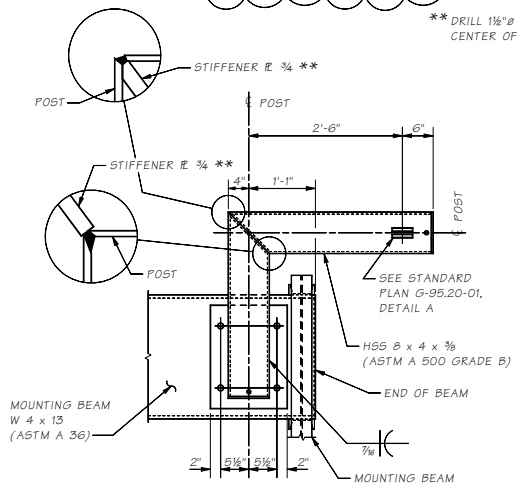

MODIFIED FALL RESTRAINT BRACKET DETAIL

NOTE:
DETAILS SAME AS STANDARD PLAN G-95.20-01 EXCEPT AS NOTED. SEE FALL RESTRAINT BRACKET INSTALLATION ON EXISTING MONOTUBE SIGN BRIDGE FOR PLATE & BOLTING INFORMATION.

Bridge Design Engr.	M:\STANDARDS\Sign Bridges\MT_CANTILEVER_T_DETAILS_2.MAN				REGION NO.	STATE	FED. AID PROJ. NO.	SHEET NO.	TOTAL SHEETS
Supervisor					10	WASH.			
Designed By					JOB NUMBER				
Checked By									
Detailed By									
Bridge Projects Engr.									
Prelim. Plan By									
Architect/Specialist	DATE	REVISION	BY	APP'D					

Fri Sep 03 09:42:04 2010

BRIDGE AND STRUCTURES OFFICE

Washington State Department of Transportation

STANDARD SIGN BRIDGES

MONOTUBE BALANCED CANTILEVER STRUCTURAL DETAILS 2

BRIDGE SHEET NO.
SHEET
OF
SHEETS

SR FILE NO. SHEET
10.1-A3-3

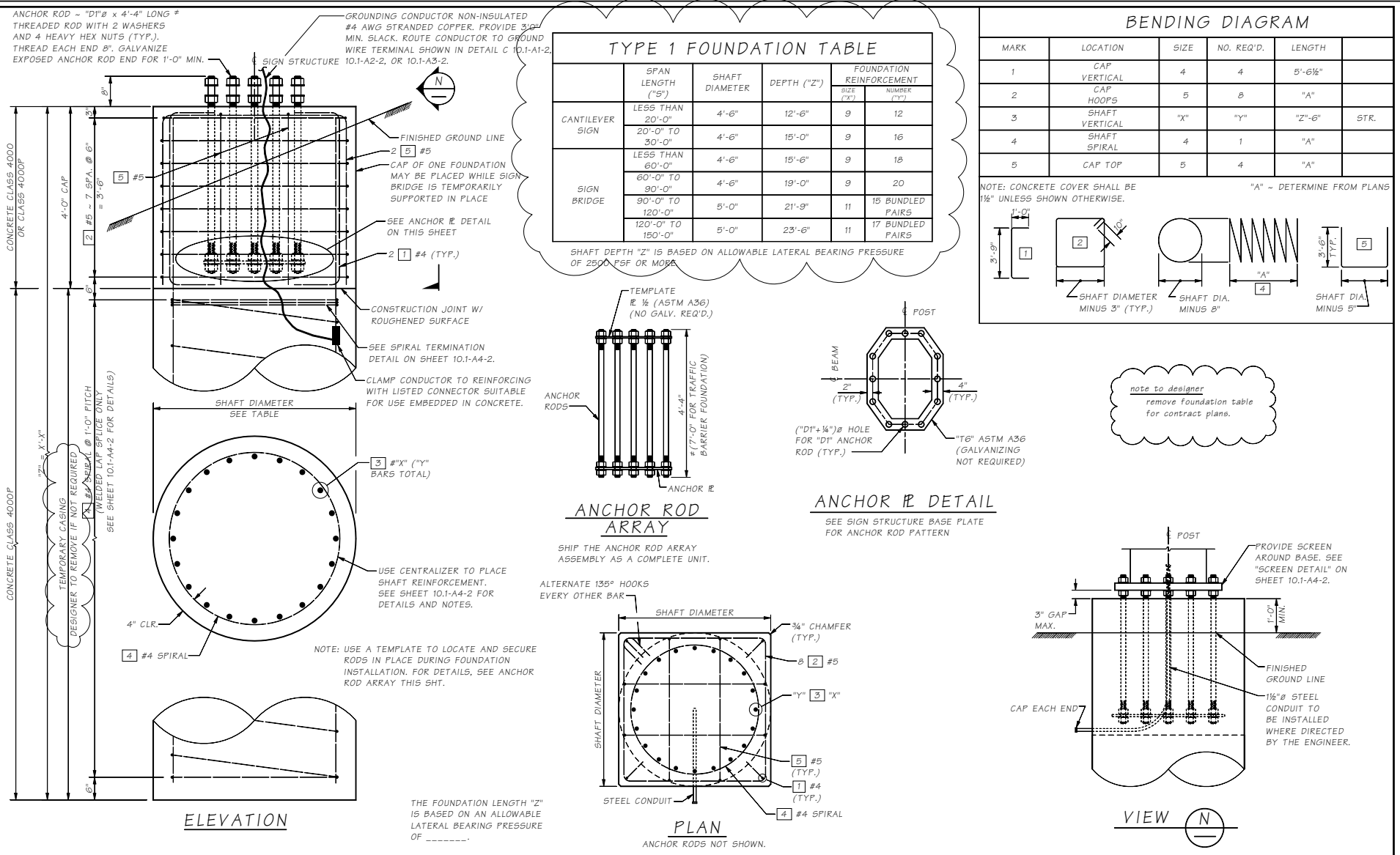

TYPE 1 FOUNDATION TABLE

	SPAN LENGTH ("S")	SHAFT DIAMETER	DEPTH ("Z")	FOUNDATION REINFORCEMENT SIZE ("X")	FOUNDATION REINFORCEMENT NUMBER ("Y")
CANTILEVER SIGN	LESS THAN 20'-0"	4'-6"	12'-6"	9	12
	20'-0" TO 30'-0"	4'-6"	15'-0"	9	16
SIGN BRIDGE	LESS THAN 60'-0"	4'-6"	15'-6"	9	18
	60'-0" TO 90'-0"	4'-6"	19'-0"	9	20
	90'-0" TO 120'-0"	5'-0"	21'-9"	11	15 BUNDLED PAIRS
	120'-0" TO 150'-0"	5'-0"	23'-6"	11	17 BUNDLED PAIRS

SHAFT DEPTH "Z" IS BASED ON ALLOWABLE LATERAL BEARING PRESSURE OF 2500 PSF OR MORE

BENDING DIAGRAM

MARK	LOCATION	SIZE	NO. REQ'D.	LENGTH	
1	CAP VERTICAL	4	4	5'-6½"	
2	CAP HOOPS	5	8	"A"	
3	SHAFT VERTICAL	"X"	"Y"	"Z"-6"	STR.
4	SHAFT SPIRAL	4	1	"A"	
5	CAP TOP	5	4	"A"	

NOTE: CONCRETE COVER SHALL BE 1½" UNLESS SHOWN OTHERWISE.

"A" ~ DETERMINE FROM PLANS

Bridge Design Engr.	M:\STANDARDS\Sign Bridges\MT_SIGN_BRIDGE_FND_TYPE_1.MAN							
Supervisor					REGION NO.	STATE	FED. AID PROJ. NO.	SHEET NO.	TOTAL SHEETS
Designed By					10	WASH.			
Checked By					JOB NUMBER				
Detailed By									
Bridge Projects Engr.									
Prelim. Plan By									
Architect/Specialist	DATE	REVISION	BY	APP'D					

BRIDGE AND STRUCTURES OFFICE

Washington State Department of Transportation

STANDARD SIGN BRIDGES

MONOTUBE SIGN STRUCTURES FOUNDATION TYPE 1 - SHEET 1 OF 2

BRIDGE SHEET NO. SHEET OF SHEETS

SR JOB NO. 10.1-A4-1 SHEET

Fri Sep 03 09:42:13 2010

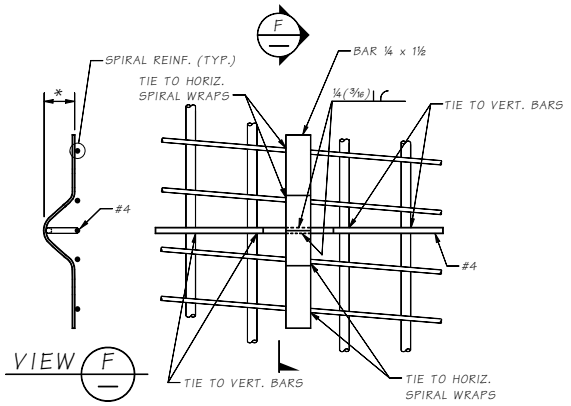

CENTRALIZER DETAIL

EPOXY COAT CENTRALIZER OR PAINT WITH INORGANIC ZINC AFTER FABRICATION (OPTION 2)

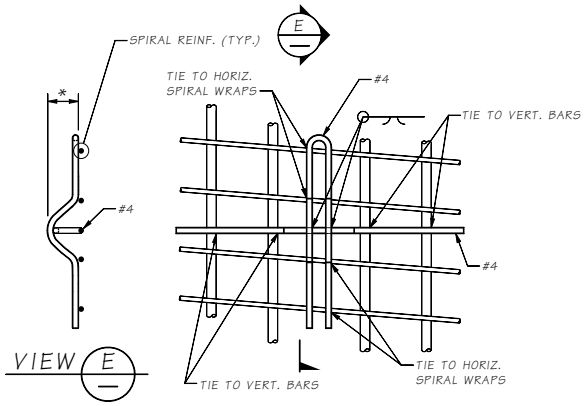

CENTRALIZER DETAIL

EPOXY COAT CENTRALIZER OR PAINT WITH INORGANIC ZINC AFTER FABRICATION (OPTION 1)

CENTRALIZER DETAIL NOTES:

EACH LEG SHALL BE TIED TO ONE VERTICAL BARS & TWO SPIRALS.

SEE SPECIAL PROVISIONS FOR SPACING REQUIREMENTS.

* CONCRETE COVER - MINUS ½"

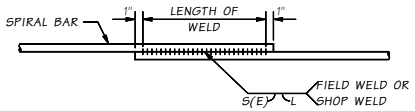

WELDED LAP SPLICE DETAIL

WELDING SHALL MEET THE REQUIREMENTS OF STD. SPEC. 6-02.3(24)E

FOR WELD DIMENSIONS, SEE TABLE BELOW.

DEFORMED BAR	WELD DIMENSIONS (IN.)		
	S	E	LENGTH (L)
#4	¼	⅛	4

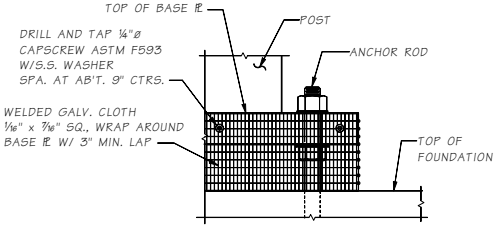

SCREEN DETAIL

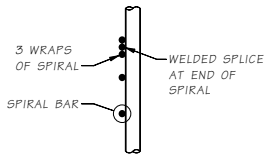

SPIRAL TERMINATION DETAIL

Bridge Design Engr.	M:\STANDARDS\Sign Bridges\MT_SIGN_BRIDGE_FND_TYPE_1_2.MAN				REGION NO.	STATE	FED. AID PROJ. NO.	SHEET NO.	TOTAL SHEETS
Supervisor					10	WASH.			
Designed By					JOB NUMBER				
Checked By									
Detailed By									
Bridge Projects Engr.									
Prelim. Plan By									
Architect/Specialist	DATE	REVISION	BY	APP'D					

BRIDGE AND STRUCTURES OFFICE

Washington State Department of Transportation

STANDARD SIGN BRIDGES

MONOTUBE SIGN STRUCTURES FOUNDATION TYPE 1 - SHEET 2 OF 2

BRIDGE SHEET NO

SHEET OF SHEETS

SR JOB NO. 10.1-A4-2 SHEET

Fri Sep 03 09:42:17 2010

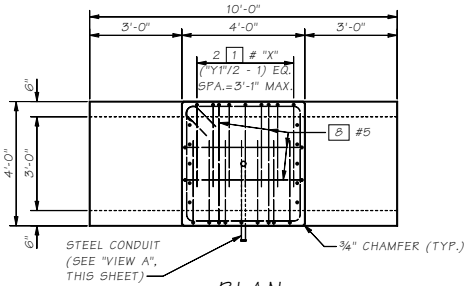

PLAN

ANCHOR BOLTS NOT SHOWN.

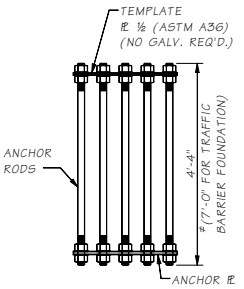

ANCHOR ROD ARRAY

SHIP THE ANCHOR ROD ARRAY ASSEMBLY AS A COMPLETE UNIT.

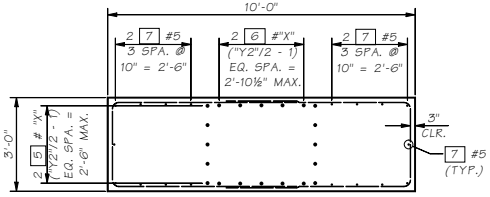

SECTION S

NOTE: USE A TEMPLATE TO LOCATE AND SECURE RODS IN PLACE DURING FOUNDATION INSTALLATION. FOR DETAILS, SEE ANCHOR ROD ARRAY ON THIS SHEET.

ANCHOR ROD ~ "D1"ø x 4'-4" LONG* THREADED ROD WITH 2 WASHERS AND 4 HEAVY HEX NUTS (TYP.). THREAD EACH END 8". GALVANIZE EXPOSED ANCHOR ROD END FOR 1'-0" MIN.

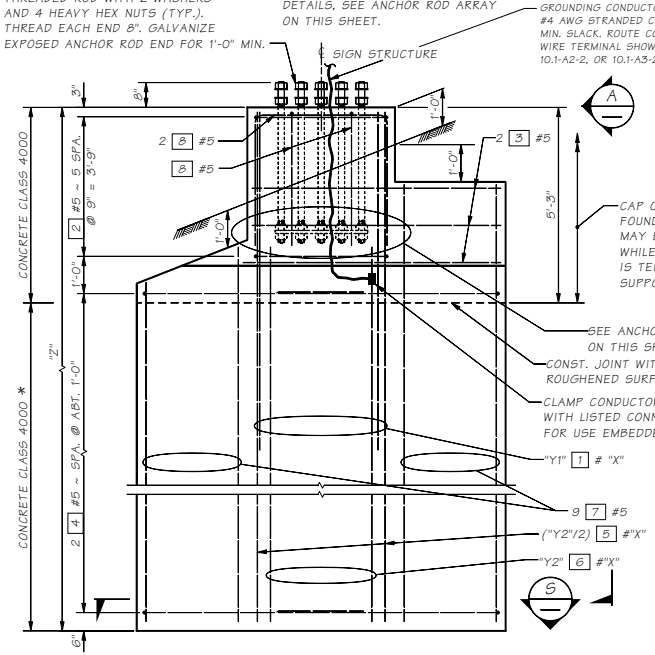

ELEVATION

* USE CONCRETE CLASS 4000P AND TREMIE IF WATER IS PRESENT IN THE EXCAVATION.

THE FOUNDATION DEPTH "Z" IS BASED ON AN ALLOWABLE LATERAL BEARING PRESSURE OF _____.

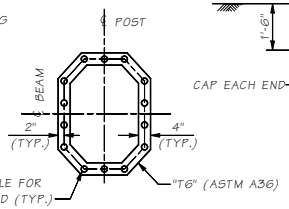

ANCHOR ℄ DETAIL

SEE SIGN STRUCTURE BASE PLATE FOR ANCHOR ROD PATTERN.

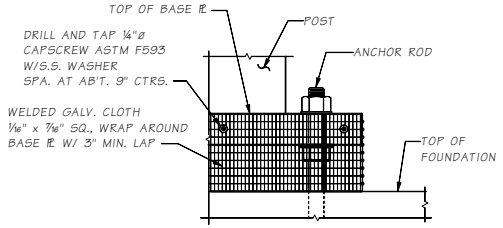

SCREEN DETAIL

VIEW A

TYPE 2 FOUNDATION TABLE**

STRUCTURE TYPE	SPAN LENGTH ("S")	DEPTH ("Z")	REINFORCEMENT SIZE ("X")	REINFORCEMENT SPACING ("Y1")	REINFORCEMENT SPACING ("Y2")
CANTILEVER SIGN	LESS THAN 20'-0"	7'-3"	9	8	4
	20'-0" TO 30'-0"	9'-6"	9	12	8
SIGN BRIDGE	LESS THAN 60'-0"	9'-0"	9	12	8
	60'-0" TO 90'-0"	11'-0"	9	16	12
	90'-0" TO 120'-0"	12'-9"	11	14	10
	120'-0" TO 150'-0"	13'-6"	11	16	14

* SHAFT DEPTH "Z" IS BASED ON ALLOWABLE LATERAL BEARING PRESSURE OF 2500 PSF OR MORE.

TYPE 3 FOUNDATION TABLE**

STRUCTURE TYPE	SPAN LENGTH ("S")	** DEPTH ("Z")	REINFORCEMENT SIZE ("X")	REINFORCEMENT SPACING ("Y1")	REINFORCEMENT SPACING ("Y2")
CANTILEVER SIGN	LESS THAN 20'-0"	11'-0"	9	8	4
	20'-0" TO 30'-0"	13'-9"	9	12	8
SIGN BRIDGE	LESS THAN 60'-0"	12'-9"	9	12	8
	60'-0" TO 90'-0"	15'-6"	9	16	12
	90'-0" TO 120'-0"	17'-9"	11	14	10
	120'-0" TO 150'-0"	19'-6"	11	16	14

** SHAFT DEPTH "Z" IS BASED ON ALLOWABLE LATERAL BEARING PRESSURE BETWEEN 1500 PSF AND 2499 PSF.

BENDING DIAGRAM

MARK	LOCATION	SIZE	NO. REQ'D.	LENGTH	
1	CAP VERTICAL	"X"	"Y1"	9'-8"	
2	CAP HOOPS	5	6	16'-0"	
3	CAP HORIZONTAL	5	6	"A"	
4	FOUNDATION HOOPS	5	16	15'-5"	STR.
5	FOUNDATION VERTICAL	"X"	"Y2"	"Z" - 6"	
6	FOUNDATION VERTICAL	"X"	"Y2"	"Z" = 4'-0"	
7	FOUNDATION VERTICAL	5	18	"A"	STR.
8	CAP TOP	5	4	10'-4"	STR.

NOTE:
CONCRETE COVER SHALL BE 1½" UNLESS SHOWN OTHERWISE.

"A" ~ DETERMINE FROM PLANS

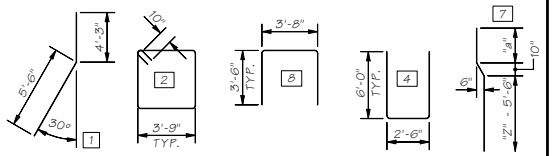

Bridge Design Engr.	M:\STANDARDS\Sign Bridges\MT_SIGN_BRIDGE_FND_TYPE_2AND3.MAN				REGION NO.	STATE	FED. AID PROJ. NO.	SHEET NO.	TOTAL SHEETS
Supervisor					10	WASH.			
Designed By									
Checked By					JOB NUMBER				
Detailed By									
Bridge Projects Engr.									
Prelim. Plan By									
Architect/Specialist	DATE	REVISION	BY	APP'D					

BRIDGE AND STRUCTURES OFFICE

Washington State Department of Transportation

STANDARD SIGN BRIDGES

MONOTUBE SIGN STRUCTURES FOUNDATION TYPES 2 AND 3

BRIDGE SHEET NO. SHEET OF SHEETS

SR 10.1-A4-3 JOB NO. SHEET

Fri Sep 03 09:42:18 2010

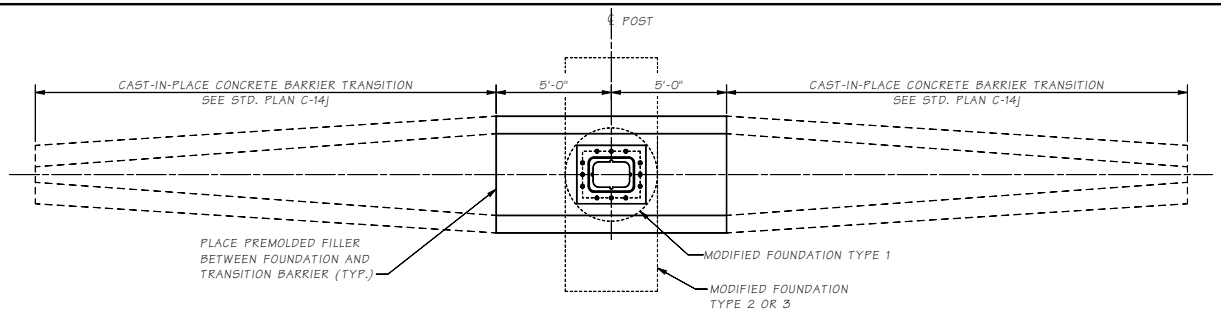

PLAN

BARRIER TRANSITION

ANCHOR RODS NOT SHOWN.

BENDING DIAGRAM

MARK	LOCATION	SIZE	NO. REQ'D	LENGTH	
21	MEDIAN BARRIER HORIZONTAL	5	10	9'-9"	STR.
22	MEDIAN BARRIER VERTICAL	5	14	7'-8"	
23	MEDIAN BARRIER VERTICAL	5	28	6'-4"	

NOTE:
CONCRETE COVER SHALL BE
1½" UNLESS SHOWN OTHERWISE.

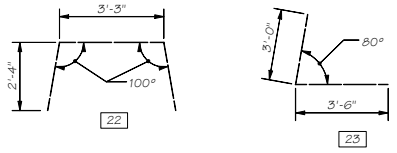

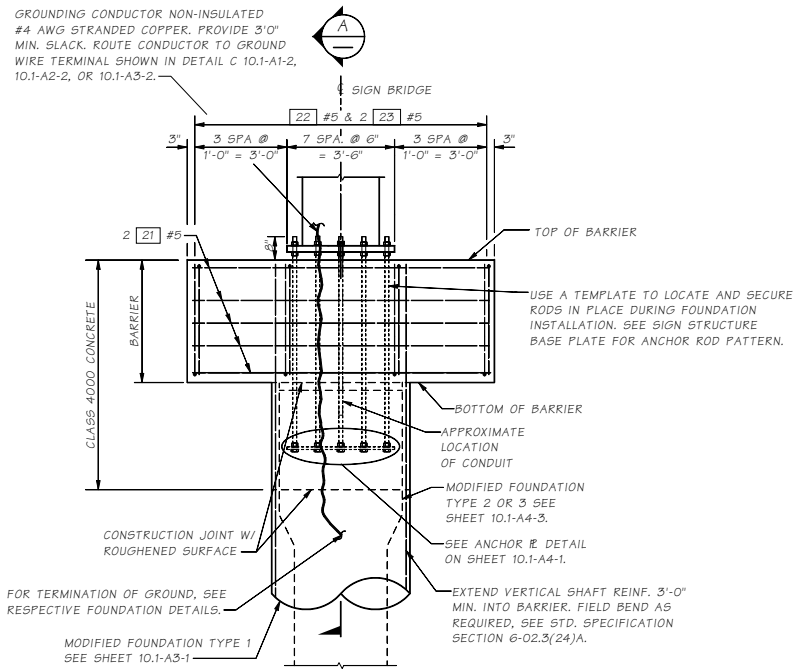

ELEVATION

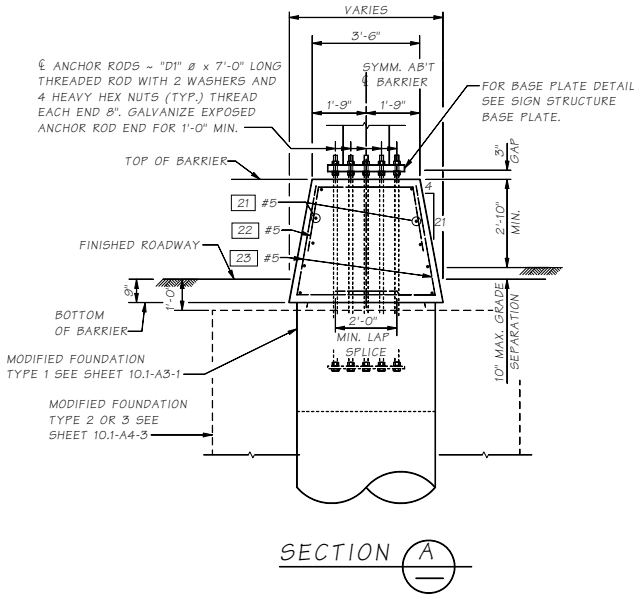

SECTION A

Bridge Design Engr.	M:\STANDARDS\Sign Bridges\MT_DBL_FACED_SINGLE_SLOPE_FND.MAN				Region No.	STATE	FED. AID PROJ. NO.	SHEET NO.	TOTAL SHEETS
Supervisor					10	WASH.			
Designed By					JOB NUMBER				
Checked By									
Detailed By									
Bridge Projects Engr.									
Prelim. Plan Eng									
Architect/Specialist	DATE	REVISION	BY	APP'D					

BRIDGE AND STRUCTURES OFFICE

Washington State Department of Transportation

STANDARD SIGN BRIDGES

MONOTUBE SIGN STRUCTURE
SINGLE SLOPE TRAFFIC BARRIER FOUNDATION

BRIDGE SHEET NO. | SHEET | OF | SHEETS

SHEET 10.1-A5-1 JOB NO. SR

Fri Sep 03 09:42:09 2010

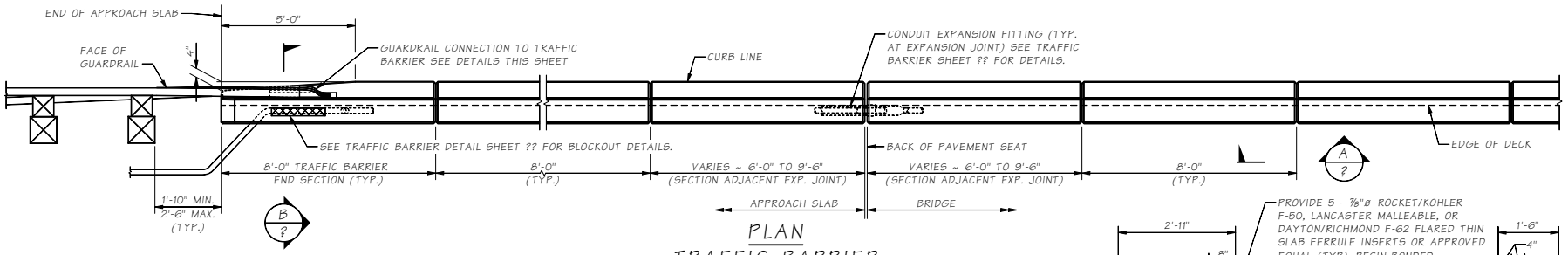

PLAN
TRAFFIC BARRIER

BARRIER CONTINUOUS BETWEEN ROADWAY EXPANSION JOINTS.
CONSTRUCTION JOINTS WITH SHEAR KEYS ARE PERMISSIBLE AT DUMMY JOINT LOCATIONS.
FORM JOINTS BETWEEN DUMMY JOINTS SHALL NOT BE PERMITTED.

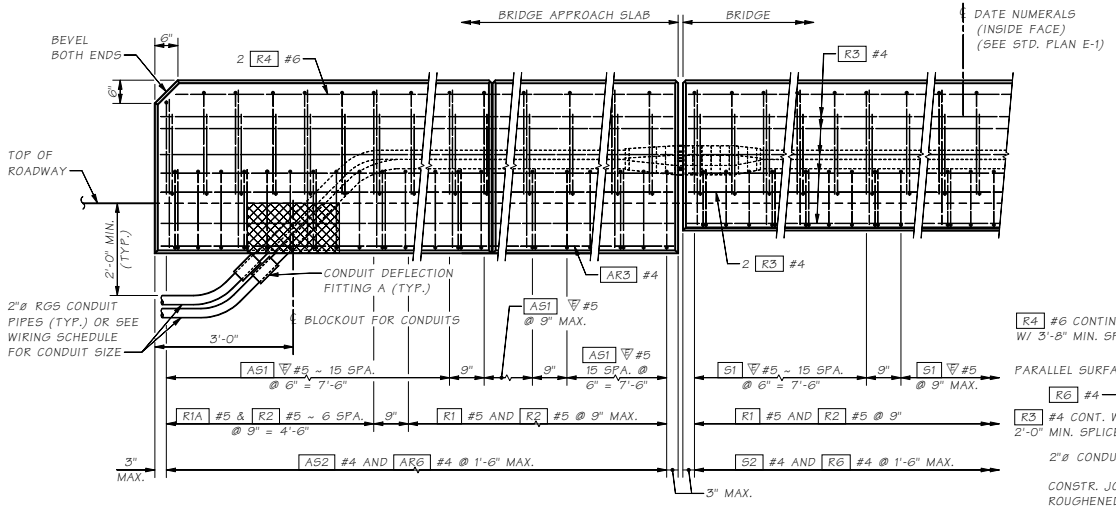

OUTSIDE ELEVATION
END OF TRAFFIC BARRIER

SHOWN WITH BRIDGE APPROACH SLAB.

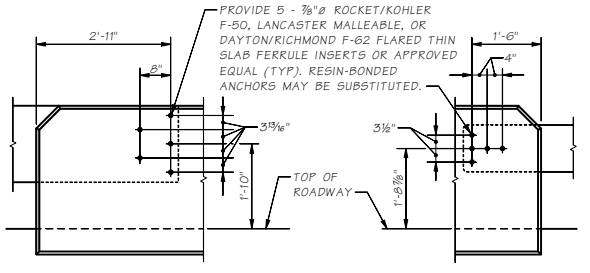

OUTSIDE ELEVATION
TRAFFIC BARRIER - GUARDRAIL CONNECTION

(WHERE SHOWN ON LAYOUT)

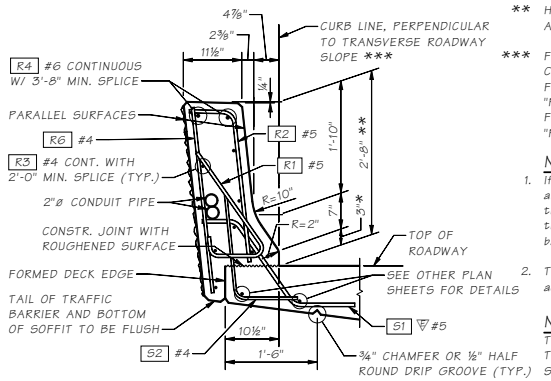

TYPICAL SECTION
TRAFFIC BARRIER

SHOWN ON BRIDGE

* TOE HEIGHT MAY VARY, 2" MIN. TO 6" MAX.

** HEIGHT MAY VARY IF REQUIRED TO PROVIDE A PROFILE PLEASING TO THE EYE

*** FOR TRANSVERSE ROADWAY SLOPES GREATER THAN 8%, CHANGE THE NOTE TO THE FOLLOWING:
FOR THE LOW SIDE OF THE BRIDGE OR MEDIAN BARRIER - "PERPENDICULAR TO 8% TRANSVERSE ROADWAY SLOPE"
FOR THE HIGH SIDE OF THE BRIDGE BARRIER - "PERPENDICULAR TO TRANSVERSE ROADWAY SLOPE"

NOTE TO DESIGNERS

1. If transverse roadway slope is greater than 8%, S1 and S2 bar bends need to be modified to account for the difference between the actual slope and 8% on the low side only of the bridge or median barrier. The barrier geometry needs to be checked also.
2. The non-applicable text should be removed from the actual bridge plans.

NW REGION:

TERMINATE EACH CONDUIT PIPE AT SEPARATE TYPE 1 JUNCTION BOXES OFF END OF BRIDGE AS SHOWN ON LAYOUT.

Bridge Design Engr.	M:\STANDARDS\Traffic Barriers\Shape F\SHAPE F BARRIER SHT 1.man				BRIDGE NO.	STATE	FED. AID PROJ. NO.	SHEET NO.	TOTAL SHEETS	BRIDGE AND STRUCTURES OFFICE
Supervisor					10	WASH.				Washington State Department of Transportation
Designed By					JOB NUMBER					STANDARD TRAFFIC BARRIERS
Checked By										
Detailed By										TRAFFIC BARRIER - SHAPE F DETAILS 1 OF 3
Bridge Projects Engr.										
Prelim. Plan By										
Architect/Specialist	DATE	REVISION	BY	APPD						

BRIDGE SHEET NO. — SHEET — OF — SHEETS

JOB NO. 10.2-A1-1 SHEET 1 SR

Thu Sep 02 13:58:31 2010

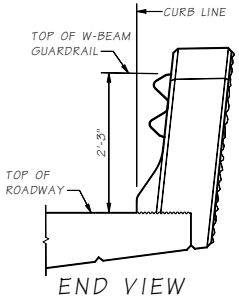

END VIEW

W-BEAM SHOWN WITH "D" CONNECTION

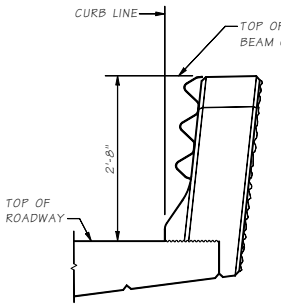

END VIEW

THRIE BEAM SHOWN WITH "D" CONNECTION

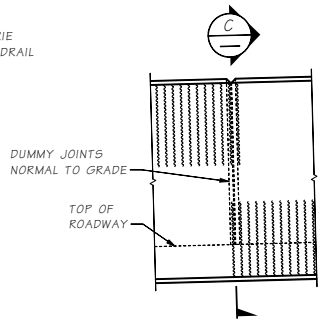

VIEW A ?

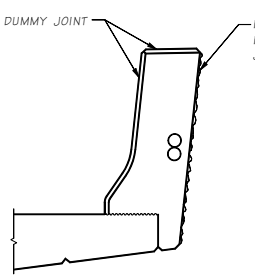

SECTION C —

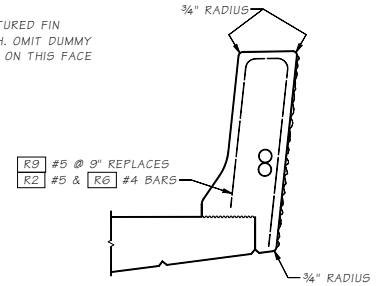

SLIPFORM ALTERNATE

SEE "TYPICAL SECTION - TRAFFIC BARRIER" FOR ADDITIONAL DETAILS

THE CONTRACTOR IS ADVISED THAT THE SLIPFORM CONSTRUCTION METHOD IS A PATENTED PROPRIETARY PROCESS FOR BARRIERS WITH A FRACTURED FIN FINISH.

JUNCTION BOX LOCATIONS

STATION	OFFSET	"TS" OR "LT"

TS = TRAFFIC SYSTEM
LT = LIGHTING SYSTEM

JUNCTION BOX LOCATIONS SHOWN ARE APPROXIMATE. CENTER JUNCTION BOX INSTALLATION BETWEEN BARRIER DUMMY JOINTS.

INSTALL ALL CONDUIT RUNS TO DRAIN TO A BRIDGE END OR PROVIDE DRAIN AT ALL LOW POINTS IN CONDUIT RUN ON BRIDGE.

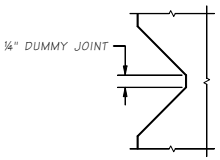

DUMMY JOINT DETAIL

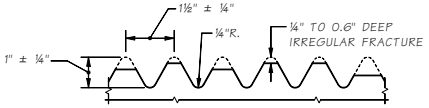

FRACTURED FIN FINISH

BENDING DIAGRAM

ALL DIMENSIONS ARE OUT TO OUT
≠ DIMENSIONS TO POINTS OF INTERSECTION

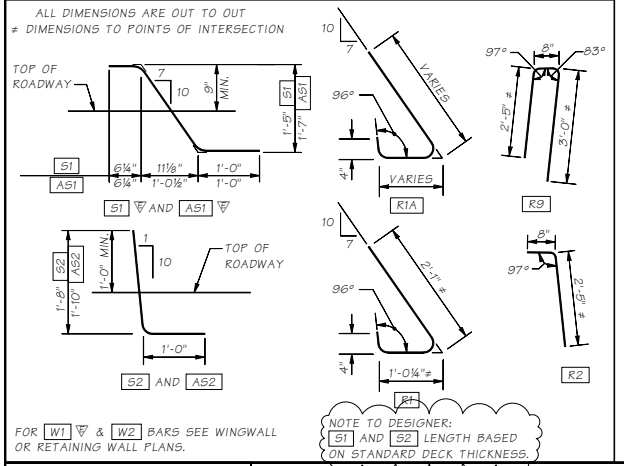

FOR W1 & W2 BARS SEE WINGWALL OR RETAINING WALL PLANS.

NOTE TO DESIGNER:
S1 AND S2 LENGTH BASED ON STANDARD DECK THICKNESS.

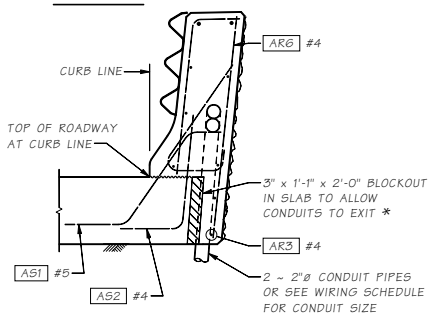

SECTION B ? APPROACH SLAB

FOR DETAILS NOT SHOWN SEE "OUTSIDE ELEVATION" AND "TYPICAL SECTION - TRAFFIC BARRIER"

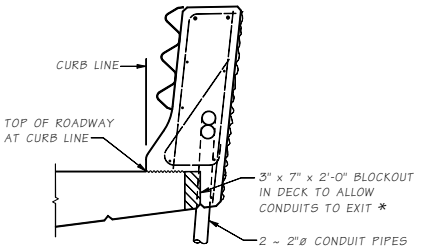

SECTION B ? BRIDGE

FOR DETAILS NOT SHOWN SEE "OUTSIDE ELEVATION" AND "TYPICAL SECTION - TRAFFIC BARRIER"

* BLOCKOUT WIDTH MAY BE INCREASED TO 6" TO ALLOW CONDUITS OF A LARGER DIAMETER THAN 2" TO EXIT BARRIER OR WALL WITHOUT REBAR STEEL CONFLICT

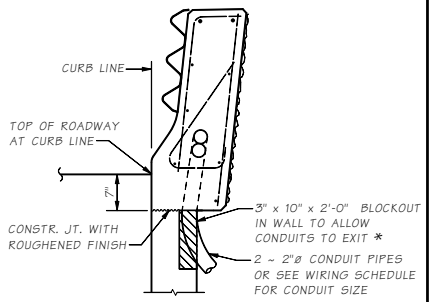

SECTION B ? WALL

DETAIL FOR RETAINING WALL OR WINGWALL. FOR REINFORCING NOT SHOWN SEE STD. PLAN D-15 OR WINGWALL PLAN.

Bridge Design Engr.	M:\STANDARDS\Traffic Barriers\Shape F\SHAPE F BARRIER SHT 2.man				PROGRAM NO.	STATE	FED. AID PROJ. NO.	SHEET NO.	TOTAL SHEETS
Supervisor					10	WASH.			
Designed By					JOB NUMBER				
Checked By									
Detailed By									
Bridge Projects Engr.									
Prelim. Plan By									
Architect/Specialist	DATE	REVISION	BY	APP'D					

BRIDGE AND STRUCTURES OFFICE

Washington State Department of Transportation

STANDARD TRAFFIC BARRIERS

TRAFFIC BARRIER - SHAPE F
DETAILS 2 OF 3

BRIDGE SHEET NO.
SHEET
OF
SHEETS

SR JOB NO. SHEET
10.2-A1-2

Thu Sep 02 13:58:34 2010

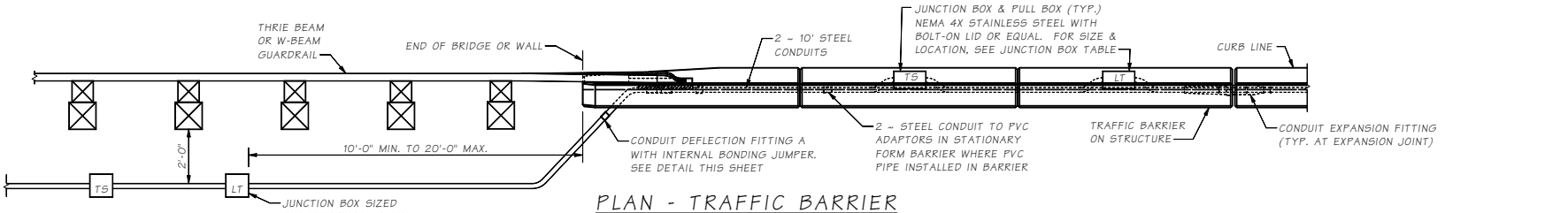

PLAN - TRAFFIC BARRIER

TYPICAL AT END OF MODIFIED TRAFFIC BARRIER END SECTION WHERE THRIE BEAM END SECTION "DESIGN F" STD. PLAN C-7a OR GUARDRAIL END SECTION "DESIGN D OR F" STD. PLAN C-5 IS USED

NOTE TO DESIGNERS

MODIFY THE FOLLOWING TO MATCH PROJECT REQUIREMENTS:
1. BARRIER END SECTION.
2. REMOVE GUARDRAIL IF NOT CONNECTED TO BRIDGE ITEM.
3. CONDUIT ALIGNMENT

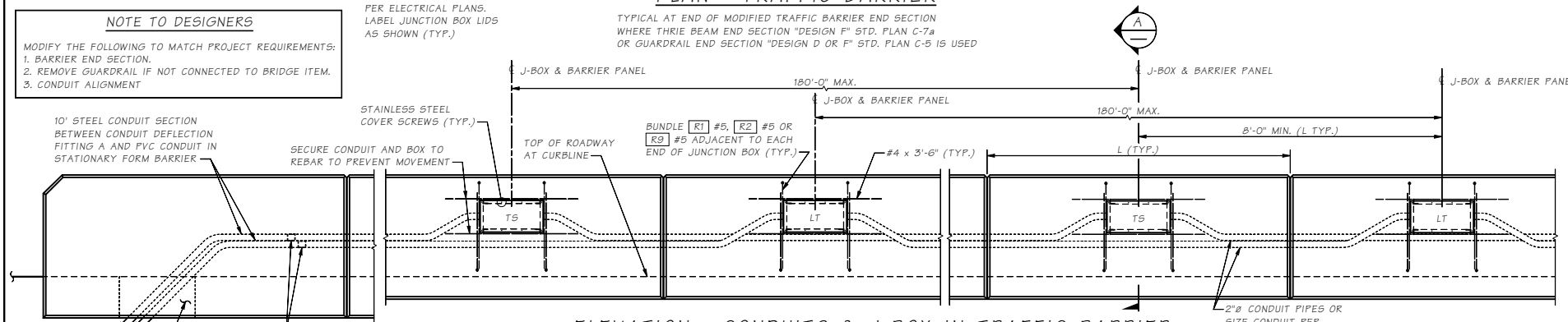

ELEVATION - CONDUITS & J-BOX IN TRAFFIC BARRIER

LABEL JUNCTION BOX COVER IN ACCORDANCE WITH STANDARD PLAN J-16a AND SPECIAL PROVISIONS. ADJACENT JUNCTION BOXES ARE SHOWN CENTERED BETWEEN ADJACENT DUMMY JOINTS. IF THE DISTANCE BETWEEN ADJACENT DUMMY JOINTS IS 16'-0" OR GREATER, PLACE ADJACENT JUNCTION BOXES SYMMETRICALLY ON EITHER SIDE OF THE CENTER OF ONE DUMMY PANEL WHILE MAINTAINING 8'-0" MINIMUM BETWEEN CENTER LINES OF THE JUNCTION BOXES.

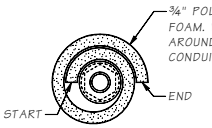

SECTION B

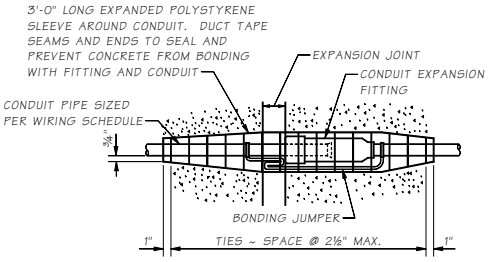

CONDUIT EXPANSION FITTING

CONDUIT FITTING - (TYPE AX FOR MOVEMENT OF ± 2") AT BRIDGE EXPANSION JOINTS

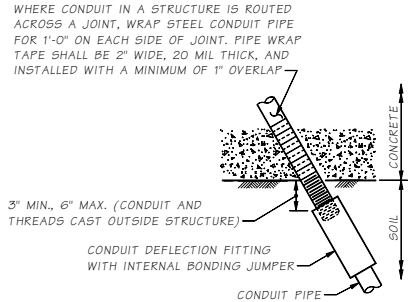

CONDUIT DEFLECTION FITTING A

CONDUIT FITTING - TYPE DX FOR DEFLECTION OF 30° AND ¾" MOVEMENT. PLACE AT CONDUIT PIPE EXIT FROM STRUCTURE

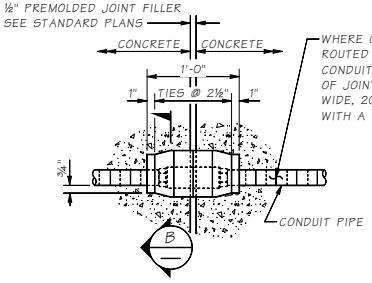

CONDUIT DEFLECTION FITTING B

CONDUIT FITTING - TYPE DX FOR DEFLECTION OF 30° AND ¾" MOVEMENT. CONDUIT PIPES PLACED THROUGH RETAINING WALL TRAFFIC BARRIER SHALL BE FITTED WITH DEFLECTION FITTINGS AT A MAXIMUM SPACING OF 120'. THE DEFLECTION FITTINGS SHALL BE PLACED AT THE TRAFFIC BARRIER OPEN JOINT THAT COINCIDES WITH THE RETAINING WALL STEM EXPANSION JOINT NEAREST TO THE TRANSVERSE CONSTRUCTION JOINT IN THE WALL FOOTING.

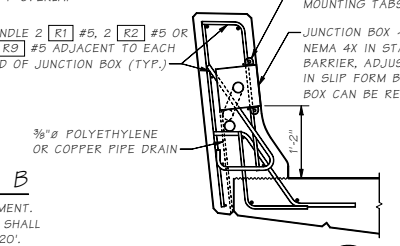

SECTION A

Bridge Design Engr.	M:\STANDARDS\Traffic Barriers\Shape F\SHAPE F BARRIER SHT 3.man								
Supervisor					REGION NO.	STATE	FED. AID PROJ. NO.	SHEET NO.	TOTAL SHEETS
Designed By					10	WASH.			
Checked By					JOB NUMBER				
Detailed By									
Bridge Projects Engr.									
Prelim. Plan By									
Architect/Specialist	DATE	REVISION	BY	APP'D					

BRIDGE AND STRUCTURES OFFICE

Washington State Department of Transportation

STANDARD TRAFFIC BARRIERS

TRAFFIC BARRIER - SHAPE F DETAIL 3 OF 3

BRIDGE SHEET NO. | SHEET | OF | SHEETS

SR | JOB NO. | SHEET

10.2-A1-3

Thu Sep 02 13:58:38 2010

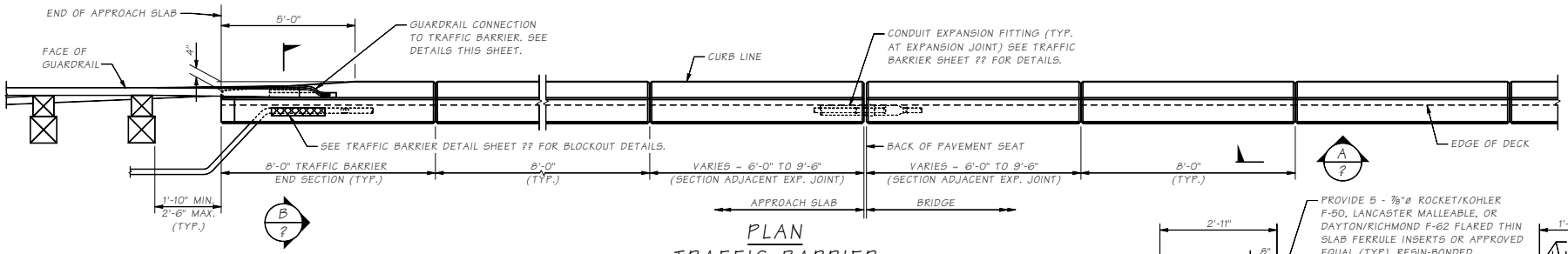

PLAN
TRAFFIC BARRIER

BARRIER CONTINUOUS BETWEEN ROADWAY EXPANSION JOINTS.
CONSTRUCTION JOINTS WITH SHEAR KEYS ARE PERMISSIBLE AT DUMMY JOINT LOCATIONS.
FORM JOINTS BETWEEN DUMMY JOINTS SHALL NOT BE PERMITTED.

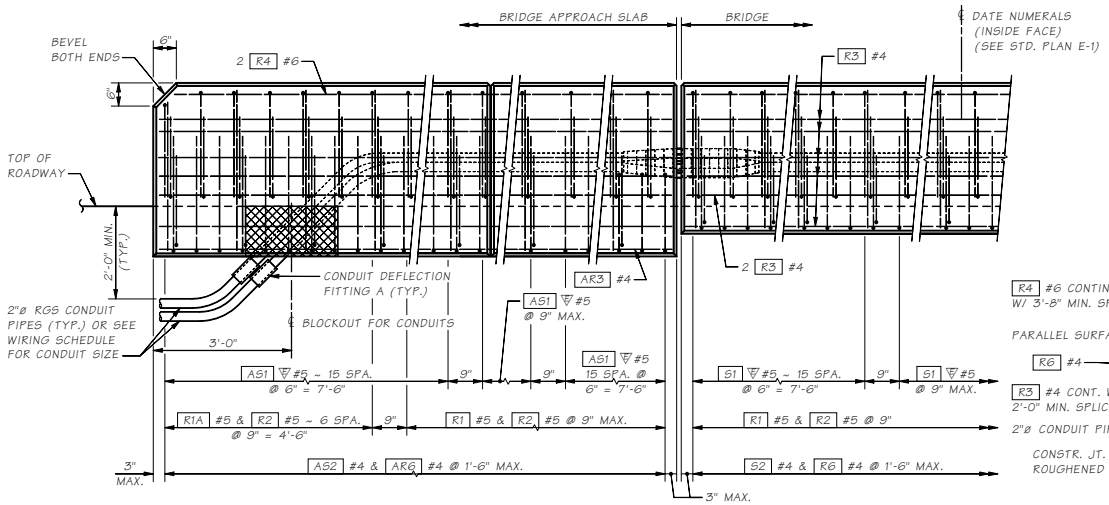

OUTSIDE ELEVATION
END OF TRAFFIC BARRIER

SHOWN WITH APPROACH SLAB

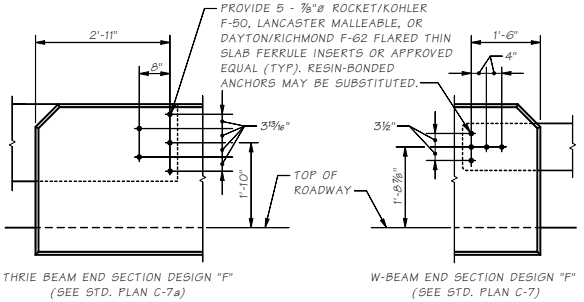

OUTSIDE ELEVATION
TRAFFIC BARRIER - GUARDRAIL CONNECTION

(WHERE SHOWN ON LAYOUT)

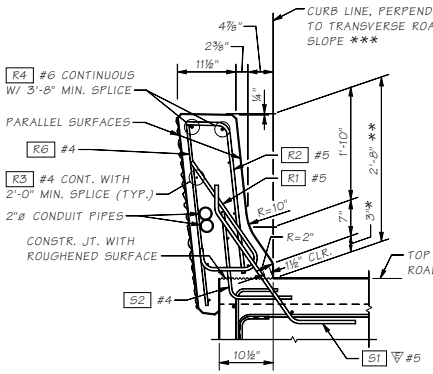

TYPICAL SECTION
TRAFFIC BARRIER

SHOWN ON BRIDGE

* TOE HEIGHT MAY VARY, 2" MIN. TO 6" MAX.

** HEIGHT MAY VARY IF REQUIRED TO PROVIDE A PROFILE PLEASING TO THE EYE

*** FOR TRANSVERSE ROADWAY SLOPES GREATER THAN 8%, CHANGE THE NOTE TO THE FOLLOWING:
FOR THE LOW SIDE OF THE BRIDGE OR MEDIAN BARRIER - "PERPENDICULAR TO 8% TRANSVERSE ROADWAY SLOPE"
FOR THE HIGH SIDE OF THE BRIDGE BARRIER - "PERPENDICULAR TO TRANSVERSE ROADWAY SLOPE"

NOTES TO DESIGNERS:

1. If transverse roadway slope is greater than 8%, S1 & S2 bar bends need to be modified to account for the difference between the actual slope & 8% on the low side only of the bridge or median barrier. The barrier geometry needs to be checked also.
2. The non-applicable text should be removed from the actual bridge plans.

NW REGION:
TERMINATE EACH CONDUIT PIPE AT SEPARATE TYPE 1 JUNCTION BOXES OFF END OF BRIDGE AS SHOWN ON LAYOUT.

Bridge Design Engr.	M:\STANDARDS\Traffic Barriers\flat slab TB\FS SHAPE F BARRIER SHT 1.MAN				REGION NO.	STATE	FED. AID PROJ. NO.	SHEET NO.	TOTAL SHEETS
Supervisor					10	WASH.			
Designed By					JOB NUMBER				
Checked By									
Detailed By									
Bridge Projects Engr.									
Prelim. Plan By									
Architect/Specialist	DATE	REVISION	BY	APP'D					

BRIDGE AND STRUCTURES OFFICE

Washington State Department of Transportation

STANDARD TRAFFIC BARRIER

TRAFFIC BARRIER - SHAPE F FLAT SLAB - DETAILS 1 OF 3

BRIDGE SHEET NO. SHEET OF SHEETS

FILE NO. SR 10.2-A2-1

Thu Sep 02 13:58:55 2010

Last revised on : 06/23/2010

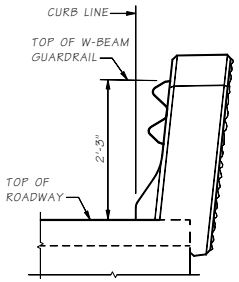

END VIEW

W-BEAM SHOWN WITH "D" CONNECTION

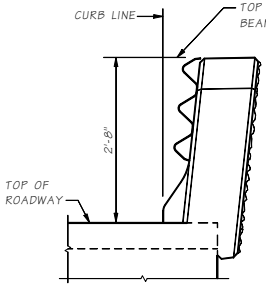

END VIEW

THRIE BEAM SHOWN WITH "D" CONNECTION

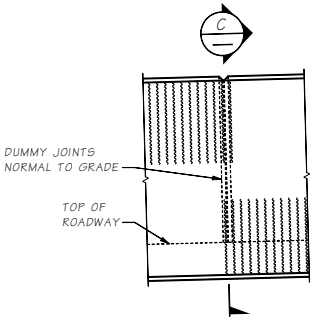

VIEW A (?)

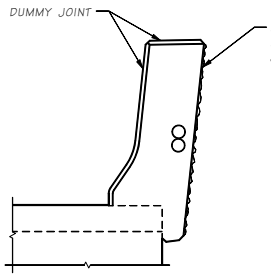

SECTION C (—)

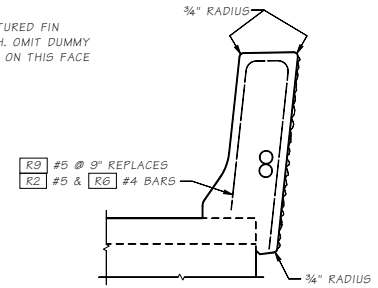

SLIPFORM ALTERNATE

SEE "TYPICAL SECTION - TRAFFIC BARRIER" FOR ADDITIONAL DETAILS

THE CONTRACTOR IS ADVISED THAT THE SLIPFORM CONSTRUCTION METHOD IS A PATENTED PROPRIETARY PROCESS FOR BARRIERS WITH A FRACTURED FIN FINISH.

JUNCTION BOX LOCATIONS

STATION	OFFSET	"TS" OR "LT"

TS = TRAFFIC SYSTEM
LT = LIGHTING SYSTEM

JUNCTION BOX LOCATIONS SHOWN ARE APPROXIMATE. CENTER JUNCTION BOX INSTALLATION BETWEEN BARRIER DUMMY JOINTS.

INSTALL ALL CONDUIT RUNS TO DRAIN TO A BRIDGE END OR PROVIDE DRAIN AT ALL LOW POINTS IN CONDUIT RUN ON BRIDGE.

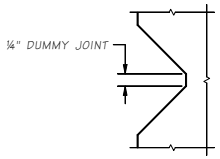

DUMMY JOINT DETAIL

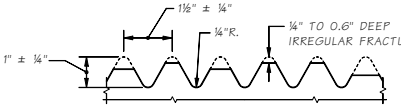

FRACTURED FIN FINISH

BENDING DIAGRAM

ALL DIMENSIONS ARE OUT TO OUT.

≠ = DIMENSIONS TO POINTS OF INTERSECTION.

FOR W1 & W2 BARS SEE WINGWALL OR RETAINING WALL PLANS.

S1 AND S2 LENGTH BASED ON 5" TOPPING

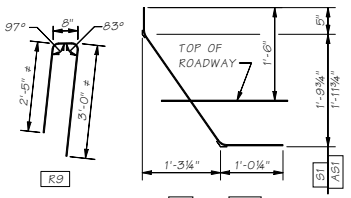

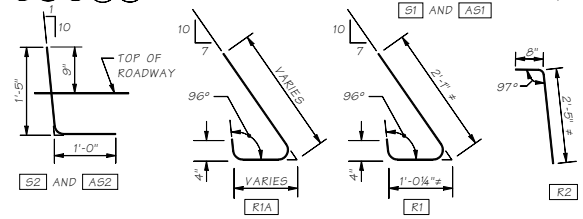

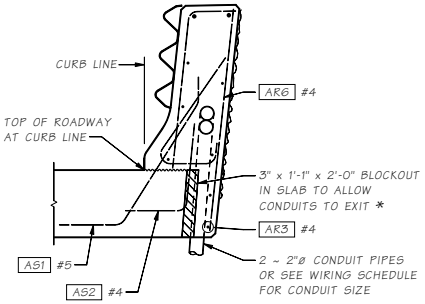

SECTION B (?) APPROACH SLAB

FOR DETAILS NOT SHOWN SEE "OUTSIDE ELEVATION" AND "TYPICAL SECTION - TRAFFIC BARRIER"

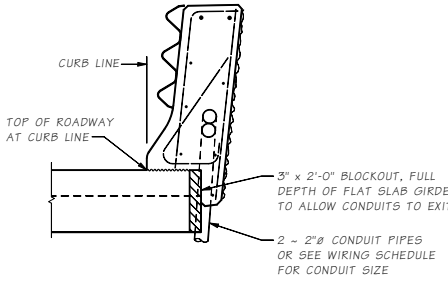

SECTION B (?) BRIDGE

FOR DETAILS NOT SHOWN SEE "OUTSIDE ELEVATION" AND "TYPICAL SECTION - TRAFFIC BARRIER"

* BLOCKOUT WIDTH MAY BE INCREASED TO 6" TO ALLOW CONDUITS OF A LARGER DIAMETER THAN 2" TO EXIT BARRIER OR WALL WITHOUT REBAR STEEL CONFLICT

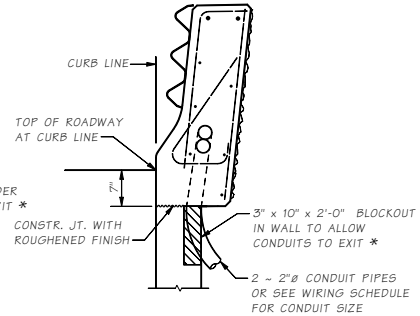

SECTION B (?) WALL

DETAIL FOR RETAINING WALL OR WINGWALL. FOR REINFORCING NOT SHOWN SEE STD. PLAN D-15 OR WINGWALL PLANS.

Bridge Design Engr.	M:\STANDARDS\Traffic Barriers\Flat Slab TB\FS SHAPE F BARRIER SHT 2.man							
Supervisor					REGION NO.	STATE	FED. AID PROJ. NO.	SHEET NO.	TOTAL SHEETS
Designed By					10	WASH.			
Checked By					JOB NUMBER				
Detailed By									
Bridge Projects Engr.									
Prelim. Plan By									
Architect/Specialist	DATE	REVISION	BY	APP'D					

Thu Sep 02 13:58:58 2010

BRIDGE AND STRUCTURES OFFICE

Washington State Department of Transportation

STANDARD TRAFFIC BARRIERS

TRAFFIC BARRIER - SHAPE F
FLAT SLAB - DETAILS 2 OF 3

BRIDGE SHEET NO. 0
SHEET OF SHEETS

FILE NO. SR 10.2-A2-2

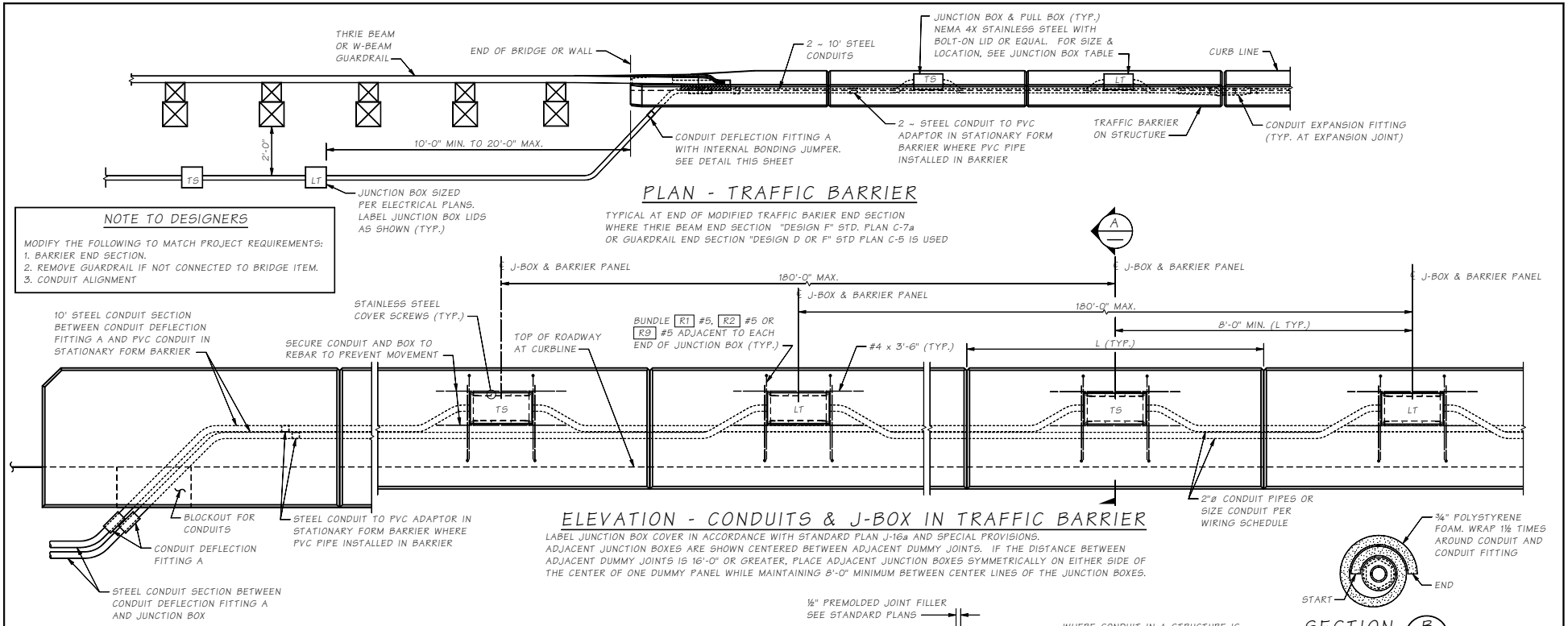

Bridge Design Engr.	M:\STANDARDS\Traffic Barriers\Flat Slab TB\FS SHAPE F BARRIER SHT 3.man				REGION NO.	STATE	FED. AID PROJ. NO.	SHEET NO.	TOTAL SHEETS
Supervisor					10	WASH.			
Designed By					JOB NUMBER				
Checked By									
Detailed By									
Bridge Projects Engr.									
Prelim. Plan By									
Architect/Specialist	DATE	REVISION	BY	APP'D					

BRIDGE AND STRUCTURES OFFICE

Washington State Department of Transportation

STANDARD TRAFFIC BARRIERS

TRAFFIC BARRIER - FLAT SLAB
FLAT SLAB - DETAILS 3 OF 3

BRIDGE SHEET NO. SHEET OF SHEETS

SR FILE NO. SHEET 0

10.2-A2-3

Thu Sep 02 13:59:01 2010

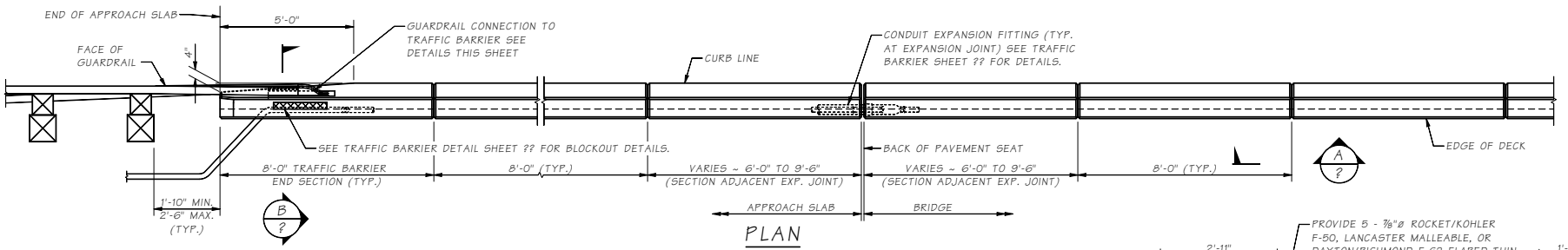

PLAN
TRAFFIC BARRIER

BARRIER CONTINUOUS BETWEEN ROADWAY EXPANSION JOINTS.
CONSTRUCTION JOINTS WITH SHEAR KEYS ARE PERMISSIBLE AT DUMMY JOINT LOCATIONS.
FORM JOINTS BETWEEN DUMMY JOINTS SHALL NOT BE PERMITTED.

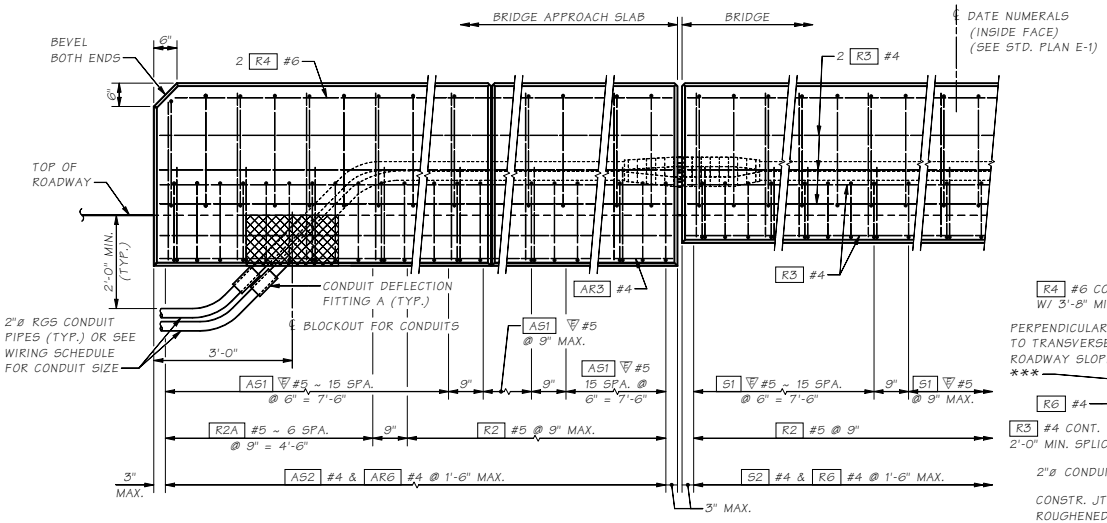

OUTSIDE ELEVATION
END OF TRAFFIC BARRIER

SHOWN WITH BRIDGE APPROACH SLAB

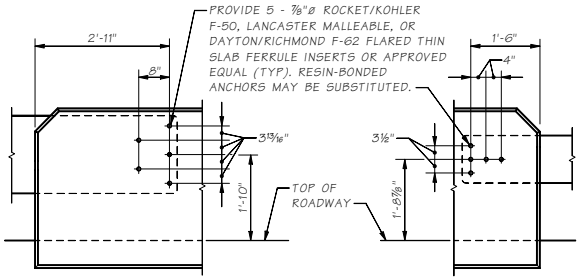

THRIE BEAM END SECTION DESIGN "F" (SEE STD. PLAN C-7a)

W-BEAM END SECTION DESIGN "F" (SEE STD. PLAN C-7)

OUTSIDE ELEVATION
TRAFFIC BARRIER - GUARDRAIL CONNECTION

(WHERE SHOWN ON LAYOUT)

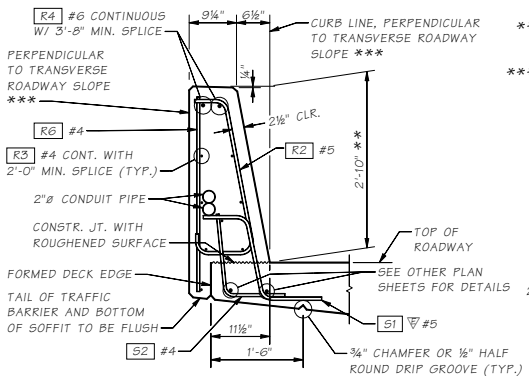

TYPICAL SECTION
TRAFFIC BARRIER

SHOWN ON BRIDGE

* TOE HEIGHT MAY VARY, 2" MIN. TO 6" MAX.

** HEIGHT MAY VARY IF REQUIRED TO PROVIDE A PROFILE PLEASING TO THE EYE

*** FOR TRANSVERSE ROADWAY SLOPES GREATER THAN 8%, CHANGE THE NOTE TO THE FOLLOWING:
FOR THE LOW SIDE OF THE BRIDGE OR MEDIAN BARRIER - "PERPENDICULAR TO 8% TRANSVERSE ROADWAY SLOPE"
FOR THE HIGH SIDE OF THE BRIDGE BARRIER - "PERPENDICULAR TO TRANSVERSE ROADWAY SLOPE"

NOTE TO DESIGNERS

1. If transverse roadway slope is greater than 8%, S1 and S2 bar bends need to be modified to account for the difference between the actual slope and 8% on the low side only of the bridge or median barrier. The barrier geometry needs to be checked also.
2. The non-applicable text should be removed from the actual bridge plans.

NW REGION:

TERMINATE EACH CONDUIT PIPE AT SEPARATE TYPE 1 JUNCTION BOXES OFF END OF BRIDGE AS SHOWN ON LAYOUT.

Bridge Design Engr.	M:\STANDARDS\Traffic Barriers\Single Slope\SSTB SHEET 1.MAN				REGION NO.	STATE	FED. AID PROJ. NO.	SHEET NO.	TOTAL SHEETS
Supervisor									
Designed By					10	WASH.			
Checked By					JOB NUMBER				
Detailed By									
Bridge Projects Engr.									
Prelim. Plan By									
Architect/Specialist	DATE	REVISION	BY	APP'D					

BRIDGE AND STRUCTURES OFFICE

Washington State Department of Transportation

STANDARD TRAFFIC BARRIERS

TRAFFIC BARRIER - SINGLE SLOPE DETAILS 1 OF 3

BRIDGE SHEET NO. | SHEET | OF | SHEETS

Last revised on : 06/23/2010

SHEET 1

JOB NO. 10.2-A3-1

SR

Thu Sep 02 13:59:10 2010

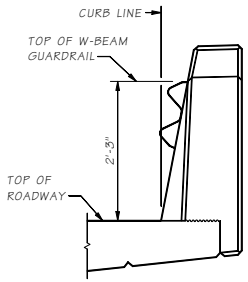

END VIEW

W-BEAM SHOWN WITH "D" CONNECTION

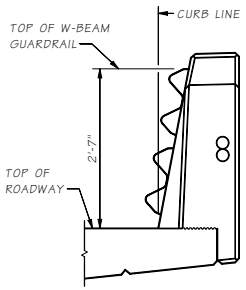

END VIEW

DUAL W-BEAM SHOWN WITH "D" CONNECTION. BARRIER TOE TAPER NOT REQUIRED.

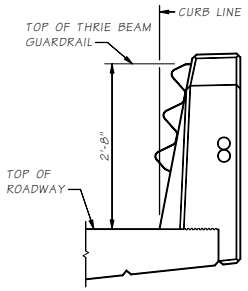

END VIEW

THRIE BEAM SHOWN WITH "D" CONNECTION

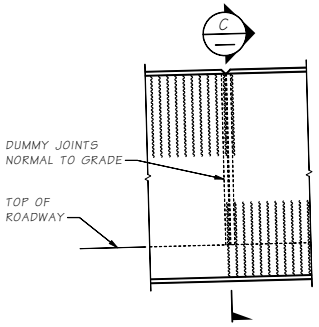

VIEW A/1

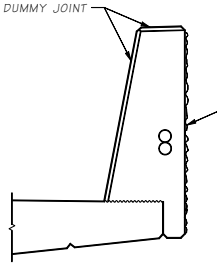

SECTION C/—

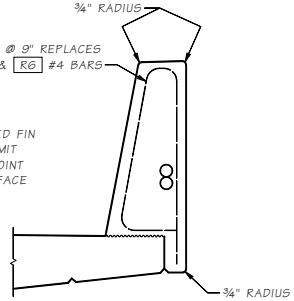

SLIPFORM ALTERNATE

SEE "TYPICAL SECTION - TRAFFIC BARRIER" FOR ADDITIONAL DETAILS.

THE CONTRACTOR IS ADVISED THAT THE SLIPFORM CONSTRUCTION METHOD IS A PATENTED PROPRIETARY PROCESS FOR BARRIERS WITH A FRACTURED FIN FINISH.

JUNCTION BOX LOCATIONS

STATION	OFFSET	"TS" OR "LT"

TS = TRAFFIC SYSTEM
LT = LIGHTING SYSTEM

JUNCTION BOX LOCATIONS SHOWN ARE APPROXIMATE. CENTER JUNCTION BOX INSTALLATION BETWEEN BARRIER DUMMY JOINTS.

INSTALL ALL CONDUIT RUNS TO DRAIN TO A BRIDGE END OR PROVIDE DRAIN AT ALL LOW POINTS IN CONDUIT RUN ON BRIDGE.

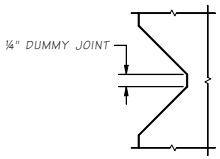

DUMMY JOINT DETAIL

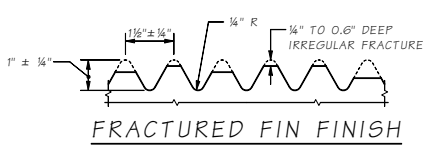

FRACTURED FIN FINISH

BENDING DIAGRAM

ALL DIMENSIONS ARE OUT TO OUT.

≠ = DIMENSIONS TO POINTS OF INTERSECTION.

FOR W1 & W2 BARS SEE WINGWALL OR RETAINING WALL PLANS.

NOTE TO DESIGNER: S1 AND S2 LENGTH BASED ON STANDARD DECK THICKNESS.

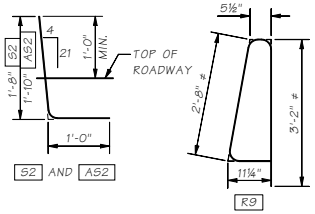

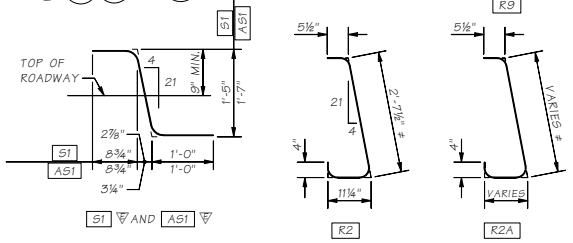

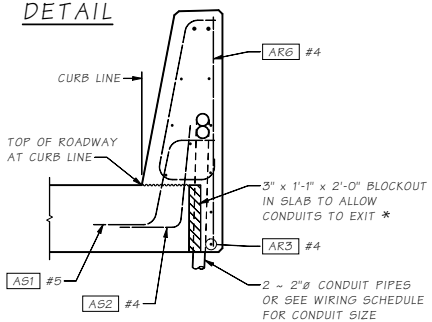

SECTION B/? APPROACH SLAB

FOR DETAILS NOT SHOWN SEE "OUTSIDE ELEVATION" AND "TYPICAL SECTION - TRAFFIC BARRIER"

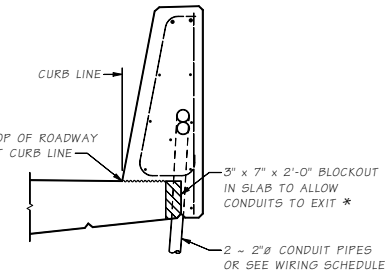

SECTION B/? BRIDGE

DETAIL FOR BRIDGE FOR DETAILS NOT SHOWN SEE "OUTSIDE ELEVATION" AND "TYPICAL SECTION - TRAFFIC BARRIER"

* BLOCKOUT WIDTH MAY BE INCREASED TO 6" TO ALLOW CONDUITS OF A LARGER DIAMETER THAN 2" TO EXIT BARRIER OR WALL WITHOUT REBAR STEEL CONFLICT

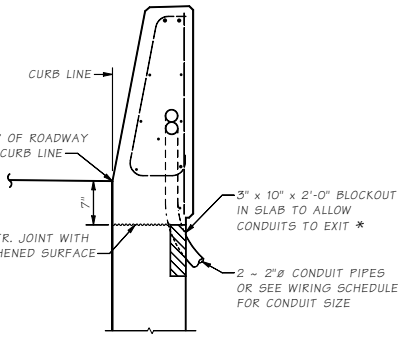

SECTION B/? WALL

DETAIL FOR RETAINING WALL OR WINGWALL. FOR REINFORCING NOT SHOWN SEE STD. PLAN D-15 OR WINGWALL PLANS.

Bridge Design Engr.	M:\STANDARDS\Traffic Barriers\Single Slope\SSTB_SHEET_2.MAN				REGION NO.	STATE	FED. AID PROJ. NO.	SHEET NO.	TOTAL SHEETS
Supervisor					10	WASH.			
Designed By					JOB NUMBER				
Checked By									
Detailed By									
Bridge Projects Engr.									
Prelim. Plan By									
Architect/Specialist	DATE	REVISION	BY	APP'D					

Thu Sep 02 13:59:13 2010

BRIDGE AND STRUCTURES OFFICE

Washington State Department of Transportation

STANDARD TRAFFIC BARRIERS

TRAFFIC BARRIER - SINGLE SLOPE DETAILS 2 OF 3

BRIDGE SHEET NO.
SHEET
OF
SHEETS

JOB NO. 10.2-A3-2
SR
SHEET

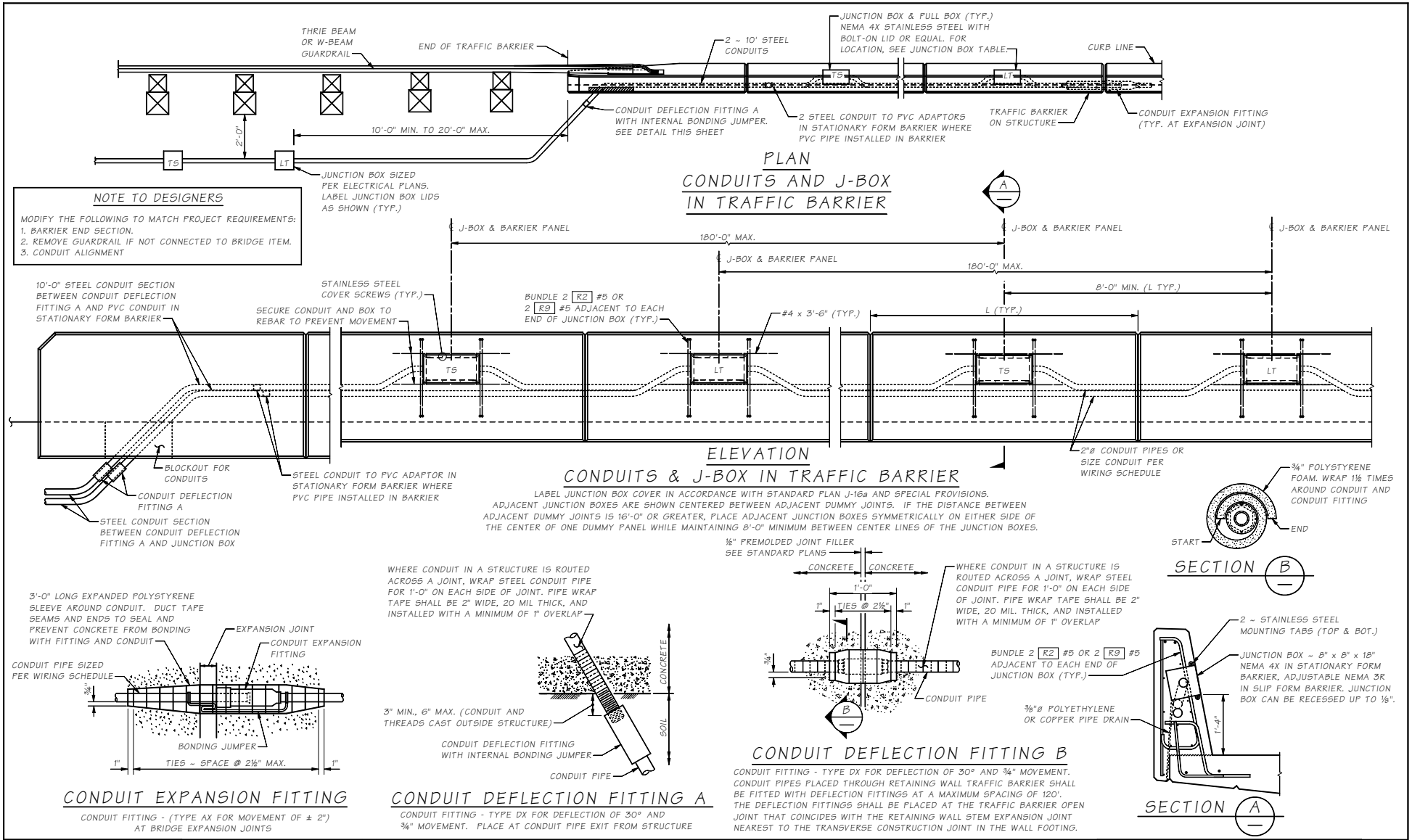

Bridge Design Engr.	M:\STANDARDS\Traffic Barriers\Single Slope\SSTB SHEET 3.MAN								
Supervisor					REGION NO.	STATE	FED. AID PROJ. NO.	SHEET NO.	TOTAL SHEETS
Designed By					10	WASH.			
Checked By					JOB NUMBER				
Detailed By									
Bridge Projects Engr.									
Prelim. Plan By									
Architect/Specialist	DATE	REVISION	BY	APP'D					

BRIDGE AND STRUCTURES OFFICE

Washington State Department of Transportation

STANDARD TRAFFIC BARRIERS

TRAFFIC BARRIER - SINGLE SLOPE DETAILS 3 OF 3

BRIDGE SHEET NO. SHEET OF SHEETS

SR JOB NO. SHEET 10.2-A3-3

Thu Sep 02 13:59:16 2010

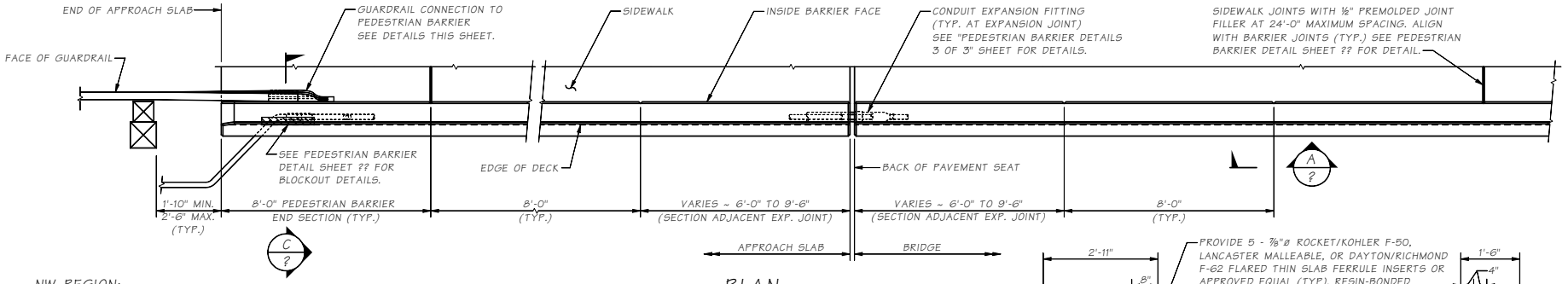

PLAN
PEDESTRIAN BARRIER

BARRIER CONTINUOUS BETWEEN ROADWAY EXPANSION JOINTS.
CONSTRUCTION JOINTS WITH SHEAR KEYS ARE PERMISSIBLE AT DUMMY JOINT LOCATIONS.
FORM JOINTS BETWEEN DUMMY JOINTS SHALL NOT BE PERMITTED.

NW REGION:
TERMINATE EACH CONDUIT PIPE AT SEPARATE JUNCTION BOXES OFF END OF BRIDGE AS SHOWN ON LAYOUT.

NOTE TO DESIGNERS:
The non-applicable text should be removed from the actual bridge plans.

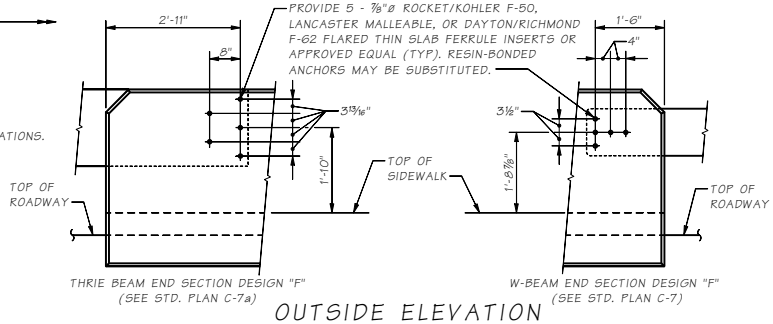

THRIE BEAM END SECTION DESIGN "F" (SEE STD. PLAN C-7a)

W-BEAM END SECTION DESIGN "F" (SEE STD. PLAN C-7)

OUTSIDE ELEVATION
PEDESTRIAN BARRIER TO GUARDRAIL CONNECTION

(WHERE SHOWN ON LAYOUT)

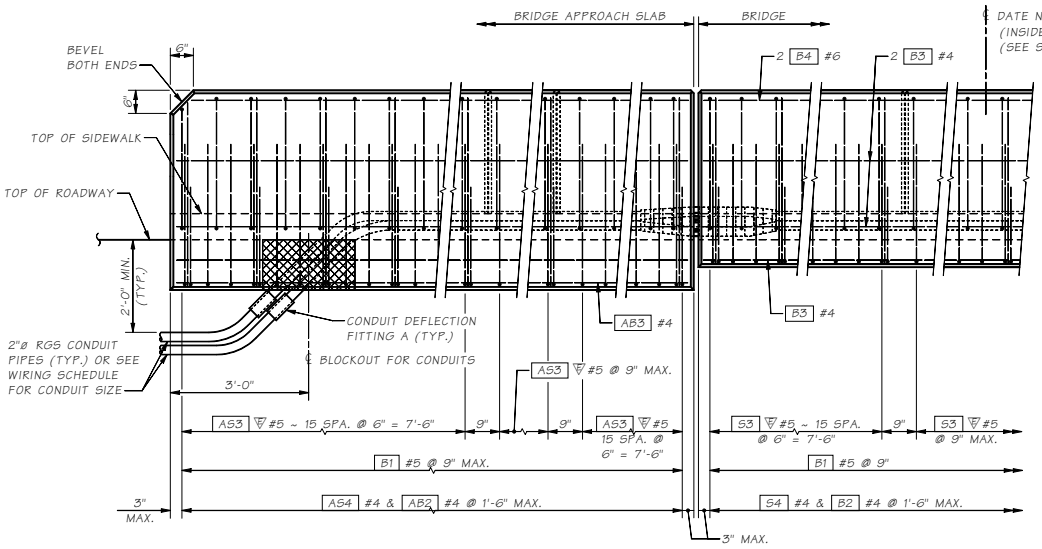

OUTSIDE ELEVATION
END OF PEDESTRIAN BARRIER

SHOWN WITH APPROACH SLAB

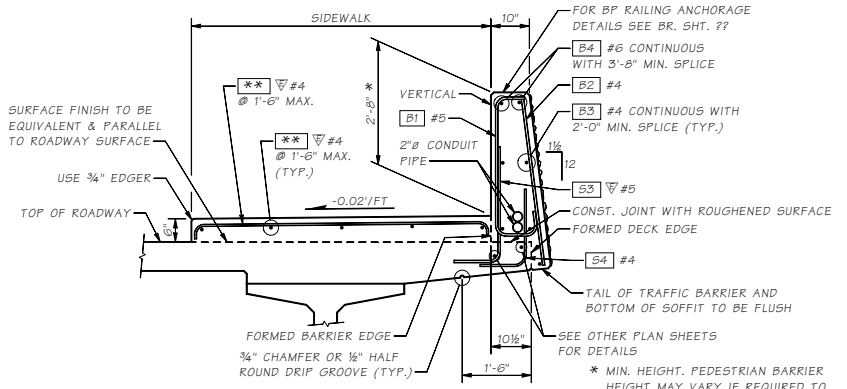

TYPICAL SECTION
PEDESTRIAN BARRIER

SHOWN ON BRIDGE

* MIN. HEIGHT. PEDESTRIAN BARRIER HEIGHT MAY VARY IF REQUIRED TO PROVIDE A SMOOTH PROFILE.

** Include in Superstructure Barlist.

Bridge Design Engr.	M:\STANDARDS\Traffic Barriers\Pedestrian Barrier\PED BARRIER 1.man								
Supervisor					REGION NO.	STATE	FED. AID PROJ. NO.	SHEET NO.	TOTAL SHEETS
Designed By					10	WASH.			
Checked By					JOB NUMBER				
Detailed By									
Bridge Projects Engr.									
Prelim. Plan By									
Architect/Specialist	DATE	REVISION	BY	APP'D					

BRIDGE AND STRUCTURES OFFICE

Washington State Department of Transportation

STANDARD TRAFFIC BARRIERS

PEDESTRIAN BARRIER DETAILS 1 OF 3

BRIDGE SHEET NO. / SHEET / OF / SHEETS

Last revised on : 06/23/2010

JOB NO. 10.2-A4-1, SHEETS

Thu Sep 02 14:04:11 2010

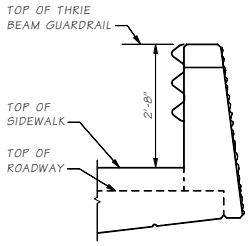

END VIEW

THRIE BEAM SHOWN WITH "D" CONNECTION

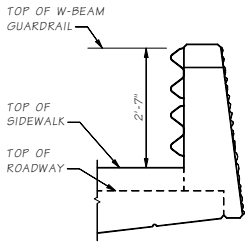

END VIEW

DUAL W-BEAM SHOWN WITH "D" CONNECTION

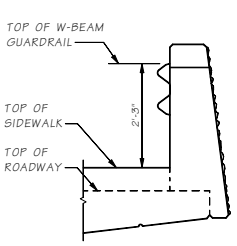

END VIEW

W-BEAM SHOWN WITH "D" CONNECTION

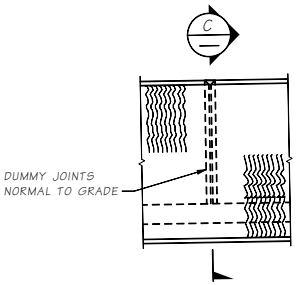

VIEW A/1

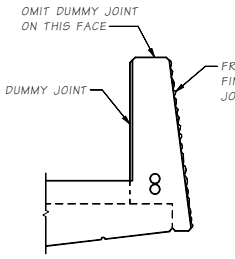

SECTION C/—

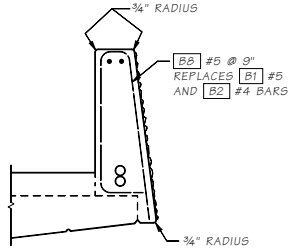

SLIPFORM ALTERNATE

SEE TYPICAL SECTION - PEDESTRIAN BARRIER FOR ADDITIONAL DETAILS

THE CONTRACTOR IS ADVISED THAT THE SLIPFORM CONSTRUCTION METHOD IS A PATENTED PROPRIETARY PROCESS FOR BARRIERS WITH A FRACTURED FIN FINISH.

JUNCTION BOX LOCATIONS

STATION	OFFSET	"TS" OR "LT"

TS = TRAFFIC SYSTEM
LT = LIGHTING SYSTEM

JUNCTION BOX LOCATIONS SHOWN ARE APPROXIMATE. CENTER JUNCTION BOX INSTALLATION BETWEEN BARRIER DUMMY JOINTS.

INSTALL ALL CONDUIT RUNS TO DRAIN TO A BRIDGE END OR PROVIDE DRAIN AT ALL LOW POINTS IN CONDUIT RUN ON BRIDGE.

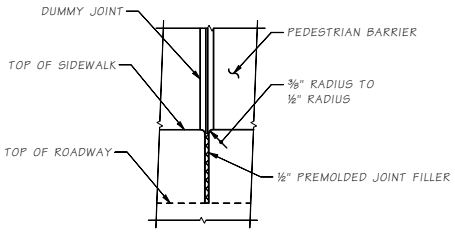

SIDEWALK JOINT DETAIL

SIDEWALK REINFORCING STEEL NOT SHOWN FOR CLARITY.

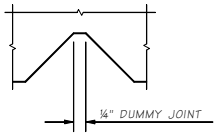

DUMMY JOINT DETAIL

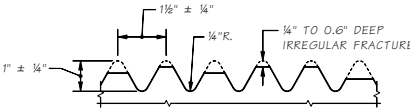

FRACTURED FIN FINISH

BENDING DIAGRAM

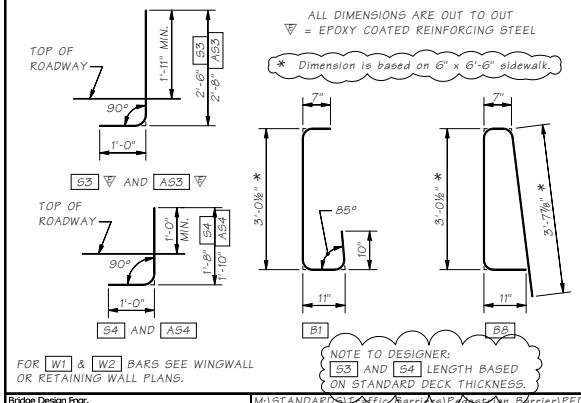

FOR W1 & W2 BARS SEE WINGWALL OR RETAINING WALL PLANS.

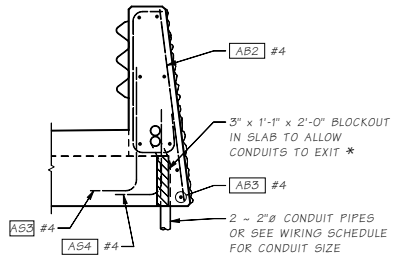

SECTION B/? APPROACH SLAB

FOR DETAILS NOT SHOWN SEE "OUTSIDE ELEVATION" AND "TYPICAL SECTION ~ PEDESTRIAN BARRIER"

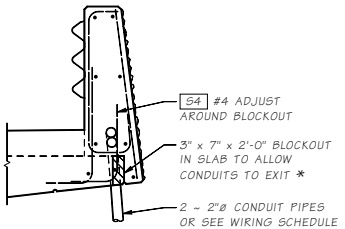

SECTION B/? BRIDGE

FOR DETAILS NOT SHOWN SEE "OUTSIDE ELEVATION" AND "TYPICAL SECTION ~ PEDESTRIAN BARRIER"

* BLOCKOUT WIDTH MAY BE INCREASED TO 6" TO ALLOW CONDUITS OF A LARGER DIAMETER THAN 2" TO EXIT BARRIER OR WALL WITHOUT REBAR STEEL CONFLICT

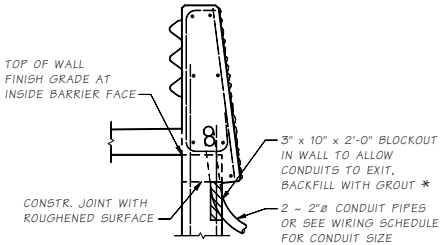

SECTION B/? WALL

DETAIL FOR RETAINING WALL OR WINGWALL. FOR REINFORCING NOT SHOWN SEE STD. PLAN D-15 OR WINGWALL PLANS.

Bridge Design Engr.	M:\STANDARDS\Traffic Barriers\Pedestrian Barrier\PED BARRIER 2.man								
Supervisor					REGION NO.	STATE	FED. AID PROJ. NO.	SHEET NO.	TOTAL SHEETS
Designed By					10	WASH.			
Checked By					JOB NUMBER				
Detailed By									
Bridge Projects Engr.									
Prelim. Plan By									
Architect/Specialist	DATE	REVISION	BY	APPD					

BRIDGE AND STRUCTURES OFFICE

Washington State Department of Transportation

STANDARD TRAFFIC BARRIERS

PEDESTRIAN BARRIER DETAILS 2 OF 3

BRIDGE SHEET NO.

SHEET OF SHEETS

SHEET

JOB NO.

SR

10.2-A4-2

Thu Sep 02 14:04:15 2010

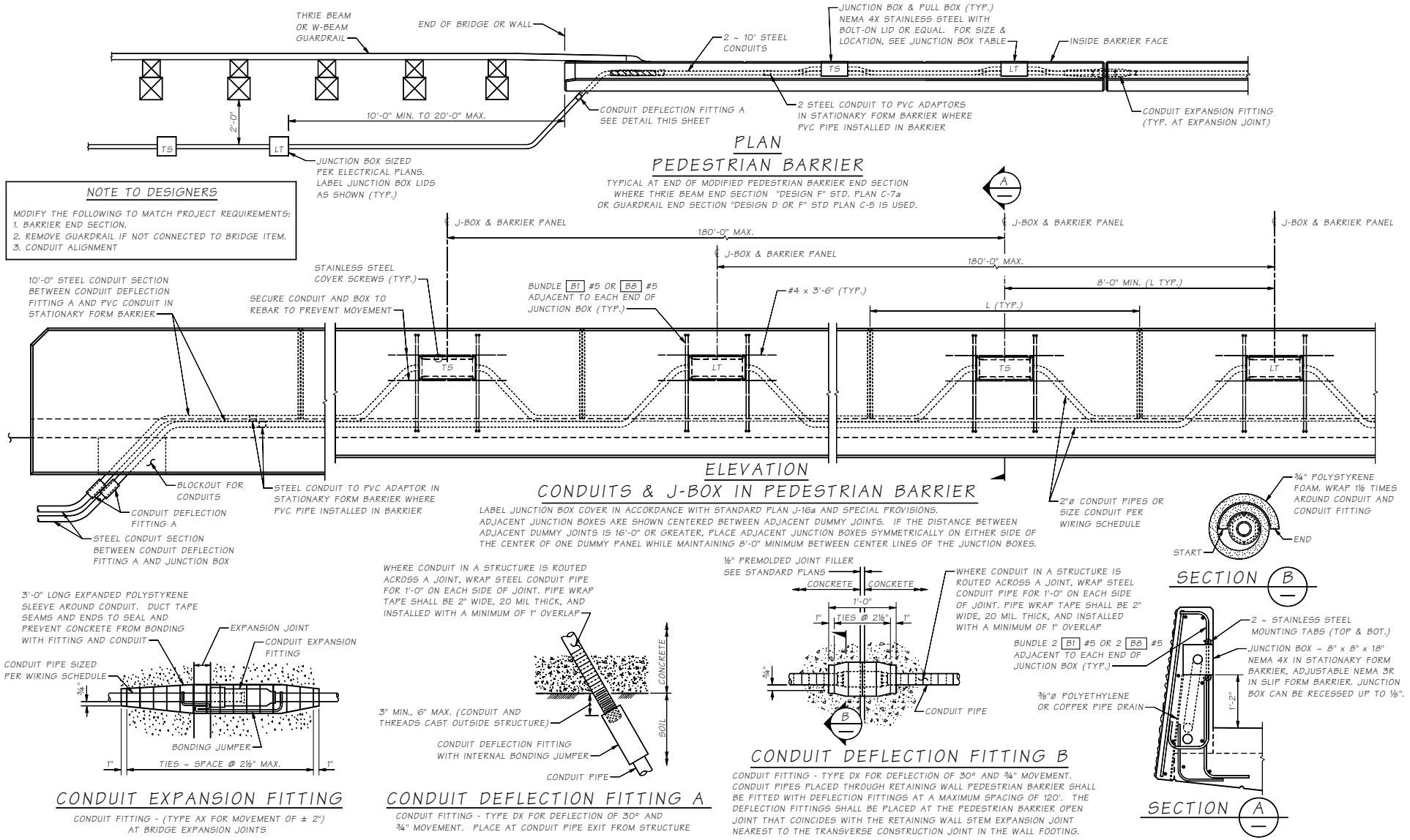

Bridge Design Engr.	M:\STANDARDS\Traffic Barriers\Pedestrian Barrier\PED BARRIER 3.man				REGION NO.	STATE	FED. AID PROJ. NO.	SHEET NO.	TOTAL SHEETS
Supervisor					10	WASH.			
Designed By					JOB NUMBER				
Checked By									
Detailed By									
Bridge Projects Engr.									
Prelim. Plan By									
Architect/Specialist	DATE	REVISION	BY	APP'D					

BRIDGE AND STRUCTURES OFFICE

Washington State Department of Transportation

STANDARD TRAFFIC BARRIERS

PEDESTRIAN BARRIER DETAILS 3 OF 3

BRIDGE SHEET NO.
SHEET
OF
SHEETS

SR JOB NO. SHEET
10.2-A4-3

Thu Sep 02 14:04:17 2010

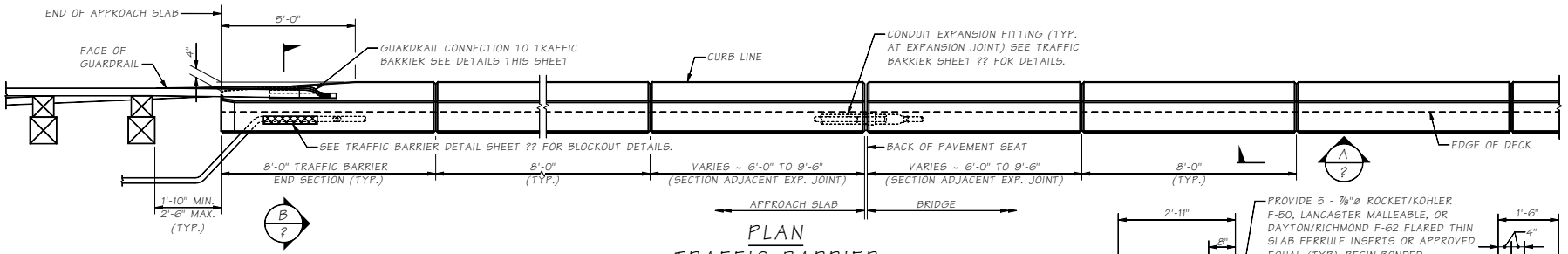

PLAN
TRAFFIC BARRIER

BARRIER CONTINUOUS BETWEEN ROADWAY EXPANSION JOINTS.
CONSTRUCTION JOINTS WITH SHEAR KEYS ARE PERMISSIBLE AT DUMMY JOINT LOCATIONS.
FORM JOINTS BETWEEN DUMMY JOINTS SHALL NOT BE PERMITTED.

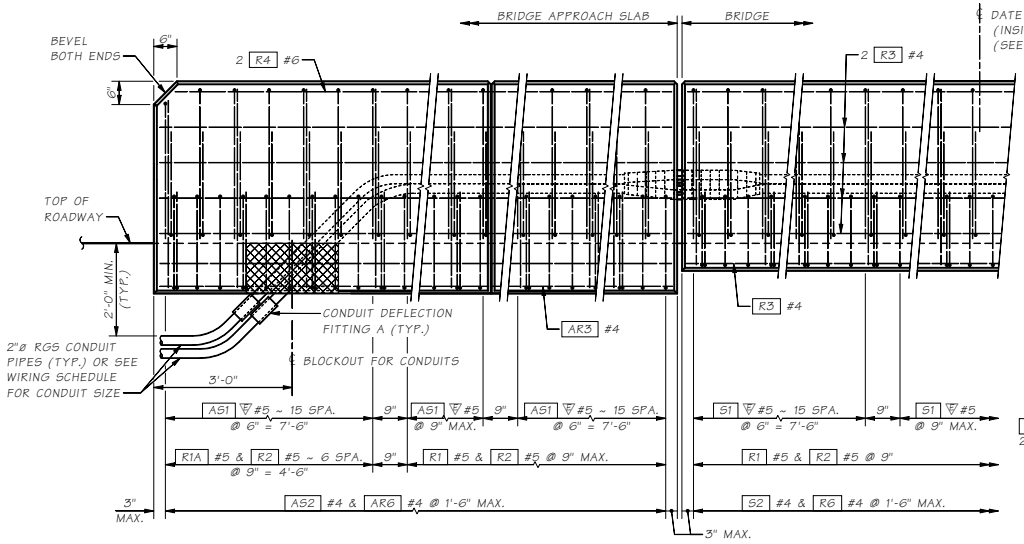

OUTSIDE ELEVATION
END OF TRAFFIC BARRIER

SHOWN WITH BRIDGE APPROACH SLAB.

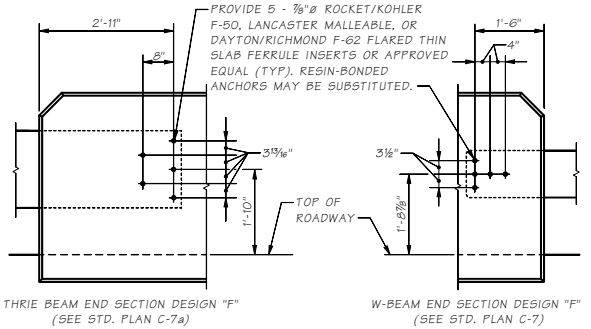

OUTSIDE ELEVATION
TRAFFIC BARRIER - GUARDRAIL CONNECTION

(WHERE SHOWN ON LAYOUT)

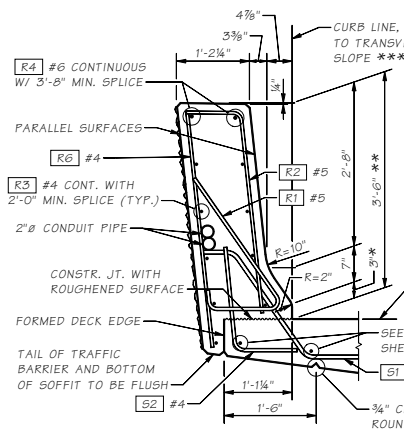

* TOE HEIGHT MAY VARY, 2" MIN. TO 6" MAX.

** HEIGHT MAY VARY IF REQUIRED TO PROVIDE A PROFILE PLEASING TO THE EYE.

*** FOR TRANSVERSE ROADWAY SLOPES GREATER THAN 8%, CHANGE THE NOTE TO THE FOLLOWING:
FOR THE LOW SIDE OF THE BRIDGE OR MEDIAN BARRIER - "PERPENDICULAR TO 8% TRANSVERSE ROADWAY SLOPE"
FOR THE HIGH SIDE OF THE BRIDGE BARRIER - "PERPENDICULAR TO TRANSVERSE ROADWAY SLOPE".

NOTE TO DESIGNERS

1. If transverse roadway slope is greater than 8%, S1 and S2 bar bends need to be modified to account for the difference between the actual slope and 8% on the low side only of the bridge or median barrier. The barrier geometry needs to be checked also.
2. The non-applicable text should be removed from the actual bridge plans.

NW REGION:

TERMINATE EACH CONDUIT PIPE AT SEPARATE TYPE 1 JUNCTION BOXES OFF END OF BRIDGE AS SHOWN ON LAYOUT.

TYPICAL SECTION
TRAFFIC BARRIER

SHOWN ON BRIDGE

Bridge Design Engr.	M:\STANDARDS\Traffic Barriers\Shape F\42IN SHAPE F BARRIER SHT 1 - TL 4.MAN									
Supervisor						BRIDGE NO.	STATE	FED. AID PROJ. NO.	SHEET NO.	TOTAL SHEETS
Designed By						10	WASH.			
Checked By						JOB NUMBER				
Detailed By										
Bridge Projects Engr.										
Prelim. Plan By										
Architect/Specialist	DATE	REVISION	BY	APP'D						

BRIDGE AND STRUCTURES OFFICE

Washington State Department of Transportation

STANDARD TRAFFIC BARRIERS

TRAFFIC BARRIER - SHAPE F 42" DETAILS 1 OF 3

BRIDGE SHEET NO.
SHEET
OF
SHEETS

Last revised on : 06/23/2010

JOB NO. 10.2-A5-1A SHEET 1 OF SHEETS

Thu Sep 02 13:58:41 2010

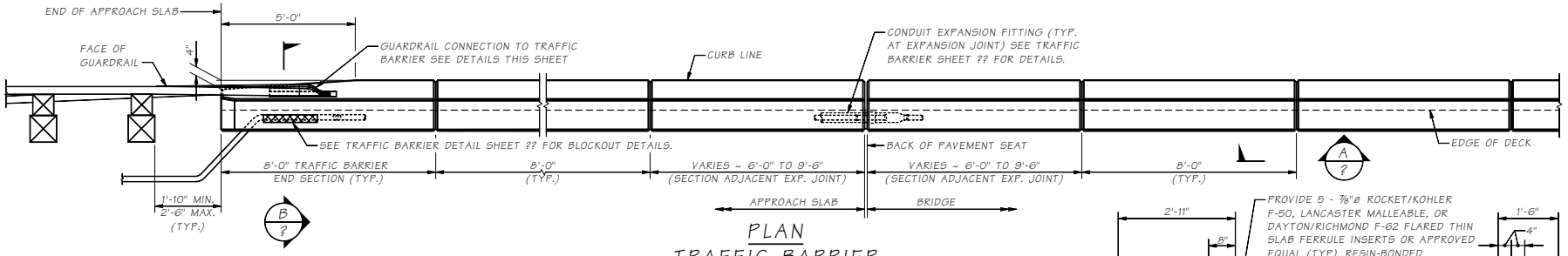

PLAN
TRAFFIC BARRIER

BARRIER CONTINUOUS BETWEEN ROADWAY EXPANSION JOINTS.
CONSTRUCTION JOINTS WITH SHEAR KEYS ARE PERMISSIBLE AT DUMMY JOINT LOCATIONS.
FORM JOINTS BETWEEN DUMMY JOINTS SHALL NOT BE PERMITTED.

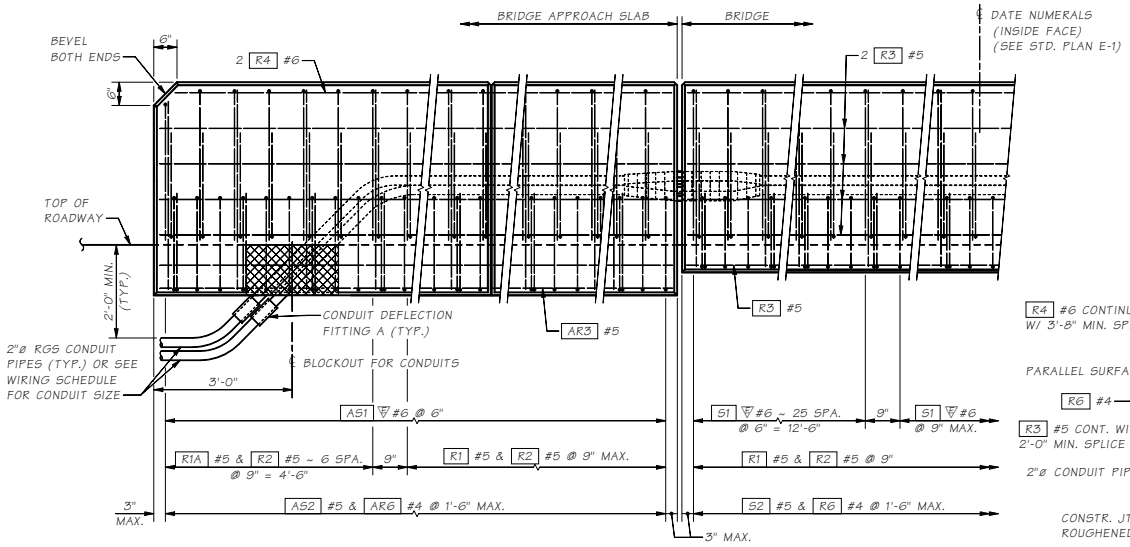

OUTSIDE ELEVATION
END OF TRAFFIC BARRIER

SHOWN WITH BRIDGE APPROACH SLAB

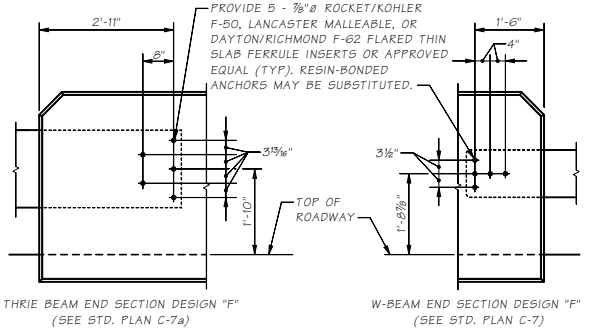

OUTSIDE ELEVATION
TRAFFIC BARRIER - GUARDRAIL CONNECTION

(WHERE SHOWN ON LAYOUT)

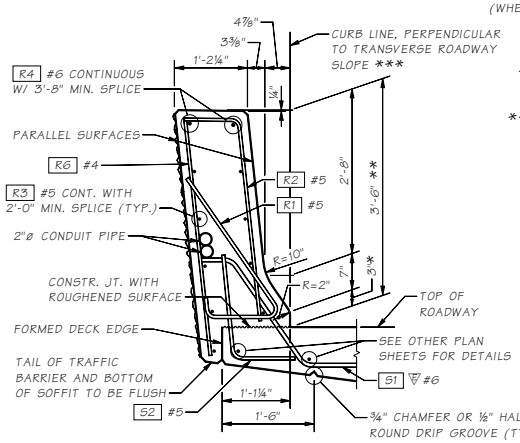

* TOE HEIGHT MAY VARY, 2" MIN. TO 6" MAX.

** HEIGHT MAY VARY IF REQUIRED TO PROVIDE A PROFILE PLEASING TO THE EYE.

*** FOR TRANSVERSE ROADWAY SLOPES GREATER THAN 8%, CHANGE THE NOTE TO THE FOLLOWING:
FOR THE LOW SIDE OF THE BRIDGE OR MEDIAN BARRIER - "PERPENDICULAR TO 8% TRANSVERSE ROADWAY SLOPE"
FOR THE HIGH SIDE OF THE BRIDGE BARRIER - "PERPENDICULAR TO TRANSVERSE ROADWAY SLOPE".

NOTE TO DESIGNERS

1. If transverse roadway slope is greater than 8%, S1 and S2 bar bends need to be modified to account for the difference between the actual slope and 8% on the low side only of the bridge or median barrier. The barrier geometry needs to be checked also.
2. The non-applicable text should be removed from the actual bridge plans.

NW REGION:

TERMINATE EACH CONDUIT PIPE AT SEPARATE TYPE 1 JUNCTION BOXES OFF END OF BRIDGE AS SHOWN ON LAYOUT.

TYPICAL SECTION
TRAFFIC BARRIER

SHOWN ON BRIDGE

Bridge Design Engr.	M:\STANDARDS\Traffic Barriers\Shape F\42IN SHAPE F BARRIER SHT 1 - TL 5.MAN								
Supervisor					REGION NO.	STATE	FED. AID PROJ. NO.	SHEET NO.	TOTAL SHEETS
Designed By					10	WASH.			
Checked By					JOB NUMBER				
Detailed By									
Bridge Projects Engr.									
Prelim. Plan By									
Architect/Specialist	DATE	REVISION	BY	APP'D					

BRIDGE AND STRUCTURES OFFICE

Washington State Department of Transportation

STANDARD TRAFFIC BARRIERS

TRAFFIC BARRIER - SHAPE F 42" DETAILS 1 OF 3

BRIDGE SHEET NO. | SHEET | OF | SHEETS

Last revised on : 06/23/2010

10.2-A5-1B

Thu Sep 02 13:58:44 2010

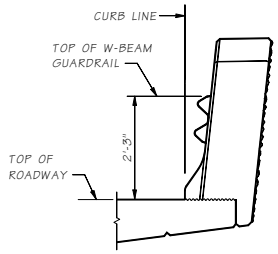

END VIEW

W-BEAM SHOWN WITH "D" CONNECTION

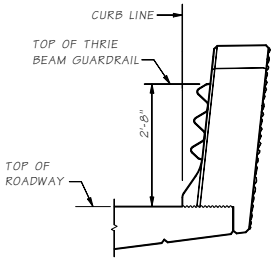

END VIEW

THRIE BEAM SHOWN WITH "D" CONNECTION

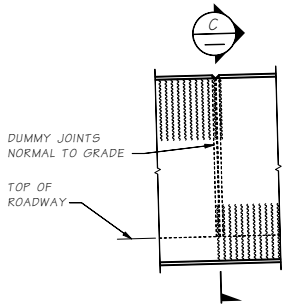

VIEW A (?)

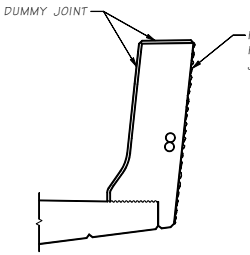

SECTION C (—)

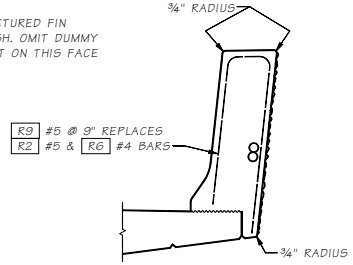

SLIPFORM ALTERNATE

SEE "TYPICAL SECTION - TRAFFIC BARRIER" FOR ADDITIONAL DETAILS

THE CONTRACTOR IS ADVISED THAT THE SLIPFORM CONSTRUCTION METHOD IS A PATENTED PROPRIETARY PROCESS FOR BARRIERS WITH A FRACTURED FIN FINISH.

JUNCTION BOX LOCATIONS

STATION	OFFSET	"TS" OR "LT"

TS = TRAFFIC SYSTEM
LT = LIGHTING SYSTEM

JUNCTION BOX LOCATIONS SHOWN ARE APPROXIMATE. CENTER JUNCTION BOX INSTALLATION BETWEEN BARRIER DUMMY JOINTS.

INSTALL ALL CONDUIT RUNS TO DRAIN TO A BRIDGE END OR PROVIDE DRAIN AT ALL LOW POINTS IN CONDUIT RUN ON BRIDGE.

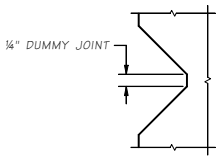

DUMMY JOINT DETAIL

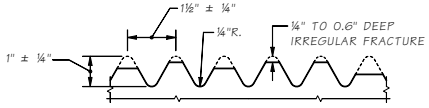

FRACTURED FIN FINISH

BENDING DIAGRAM

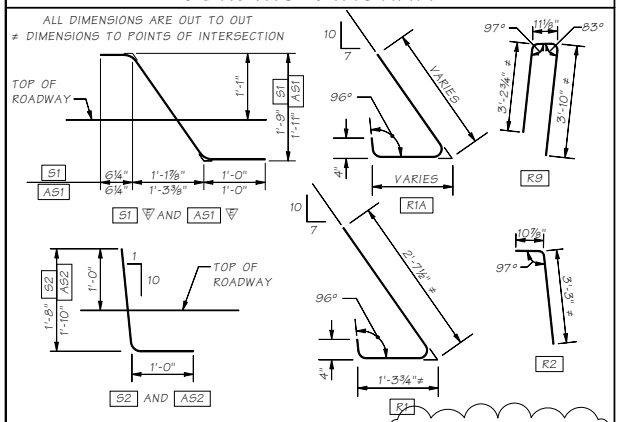

FOR W1 & W2 BARS SEE WINGWALL OR RETAINING WALL PLANS.

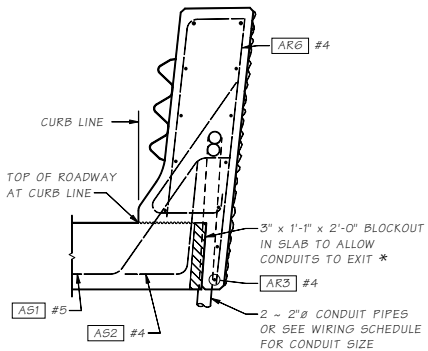

SECTION B (?) APPROACH SLAB

FOR DETAILS NOT SHOWN SEE "OUTSIDE ELEVATION" AND "TYPICAL SECTION - TRAFFIC BARRIER"

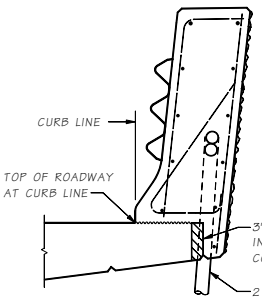

SECTION B (?) BRIDGE

FOR DETAILS NOT SHOWN SEE "OUTSIDE ELEVATION" AND "TYPICAL SECTION - TRAFFIC BARRIER"

* BLOCKOUT WIDTH MAY BE INCREASED TO 6" TO ALLOW CONDUITS OF A LARGER DIAMETER THAN 2" TO EXIT BARRIER OR WALL WITHOUT REBAR STEEL CONFLICT

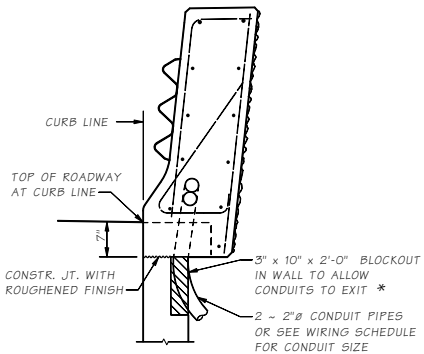

SECTION B (?) WALL

DETAIL FOR WINGWALL. FOR REINFORCING NOT SHOWN SEE WINGWALL PLANS.

Bridge Design Engr.	M:\STANDARDS\Traffic Barriers\Shape F\42IN SHAPE F BARRIER SHT 2 - TL 4.MAN			REGION NO.	STATE	FED. AID PROJ. NO.	SHEET NO.	TOTAL SHEETS
Supervisor				10	WASH			
Designed By				JOB NUMBER				
Checked By								
Detailed By								
Bridge Projects Engr.								
Prelim. Plan By								
Architect/Specialist	DATE	REVISION	BY	APP'D				

BRIDGE AND STRUCTURES OFFICE

Washington State Department of Transportation

STANDARD TRAFFIC BARRIER

TRAFFIC BARRIER - SHAPE F 42" DETAIL 2 OF 3

BRIDGE SHEET NO. / SHEET / OF / SHEETS

SR / JOB NO. / SHEET

10.2-A5-2A

Thu Sep 02 13:58:47 2010

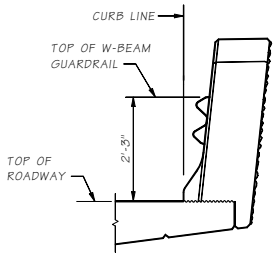

END VIEW

W-BEAM SHOWN WITH "D" CONNECTION

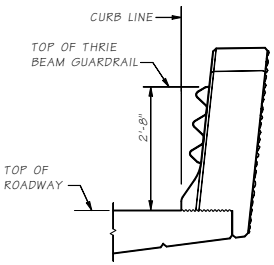

END VIEW

THRIE BEAM SHOWN WITH "D" CONNECTION

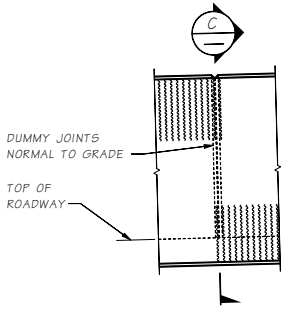

VIEW A (?)

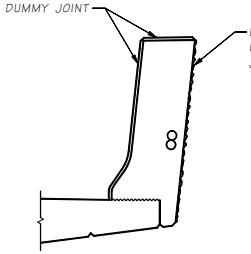

SECTION C (—)

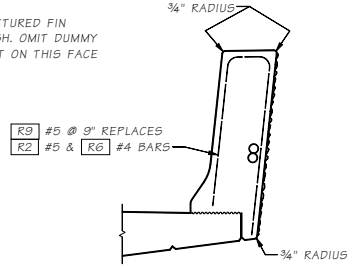

SLIPFORM ALTERNATE

SEE "TYPICAL SECTION - TRAFFIC BARRIER" FOR ADDITIONAL DETAILS

THE CONTRACTOR IS ADVISED THAT THE SLIPFORM CONSTRUCTION METHOD IS A PATENTED PROPRIETARY PROCESS FOR BARRIERS WITH A FRACTURED FIN FINISH.

JUNCTION BOX LOCATIONS

STATION	OFFSET	"TS" OR "LT"

TS = TRAFFIC SYSTEM
LT = LIGHTING SYSTEM

JUNCTION BOX LOCATIONS SHOWN ARE APPROXIMATE. CENTER JUNCTION BOX INSTALLATION BETWEEN BARRIER DUMMY JOINTS.

INSTALL ALL CONDUIT RUNS TO DRAIN TO A BRIDGE END OR PROVIDE DRAIN AT ALL LOW POINTS IN CONDUIT RUN ON BRIDGE.

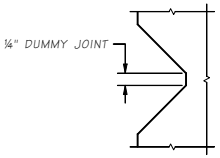

DUMMY JOINT DETAIL

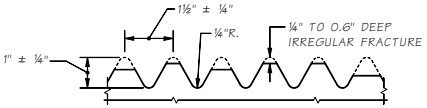

FRACTURED FIN FINISH

BENDING DIAGRAM

ALL DIMENSIONS ARE OUT TO OUT
≠ DIMENSIONS TO POINTS OF INTERSECTION

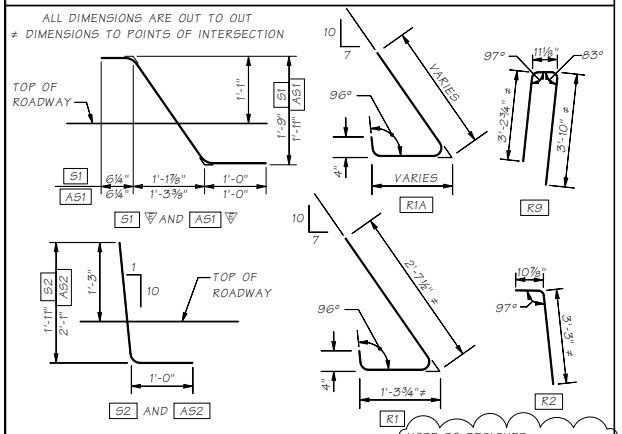

FOR W1 & W2 BARS SEE WINGWALL OR RETAINING WALL PLANS.

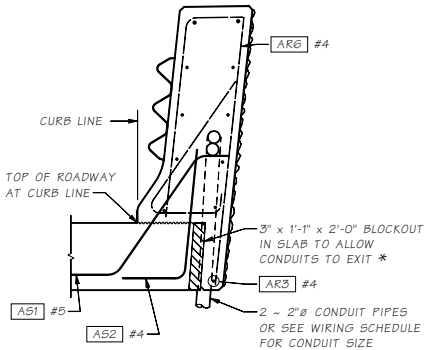

SECTION B (?) APPROACH SLAB

FOR DETAILS NOT SHOWN SEE "OUTSIDE ELEVATION" AND "TYPICAL SECTION - TRAFFIC BARRIER"

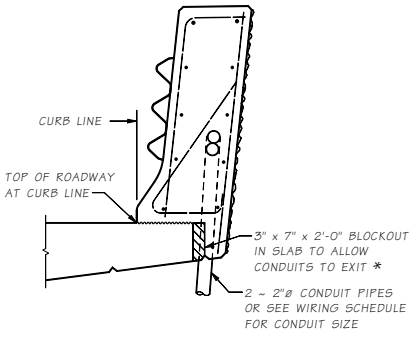

SECTION B (?) BRIDGE

FOR DETAILS NOT SHOWN SEE "OUTSIDE ELEVATION" AND "TYPICAL SECTION - TRAFFIC BARRIER"

* BLOCKOUT WIDTH MAY BE INCREASED TO 6" TO ALLOW CONDUITS OF A LARGER DIAMETER THAN 2" TO EXIT BARRIER OR WALL WITHOUT REBAR STEEL CONFLICT

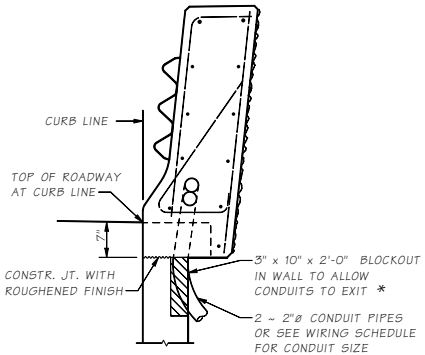

SECTION B (?) WALL

DETAIL FOR WINGWALL. FOR REINFORCING NOT SHOWN SEE WINGWALL PLANS.

Bridge Design Engr.	M:\STANDARDS\Traffic Barrier\Shape F\42IN_SHAPE_F_BARRIER_SHT 2 - TL 5.MAN				REGION NO.	STATE	FED. AID PROJ. NO.	SHEET NO.	TOTAL SHEETS
Supervisor					10	WASH.			
Designed By					JOB NUMBER				
Checked By									
Detailed By									
Bridge Projects Engr.									
Prelim. Plan By									
Architect/Specialist	DATE	REVISION	BY	APPD					

JOB NO. 10.2-A5-2B
SR SHEET
Thu Sep 02 13:58:50 2010

BRIDGE AND STRUCTURES OFFICE

Washington State Department of Transportation

STANDARD TRAFFIC BARRIER

TRAFFIC BARRIER - SHAPE F 42"
DETAIL 2 OF 3

BRIDGE SHEET NO.
SHEET OF SHEETS

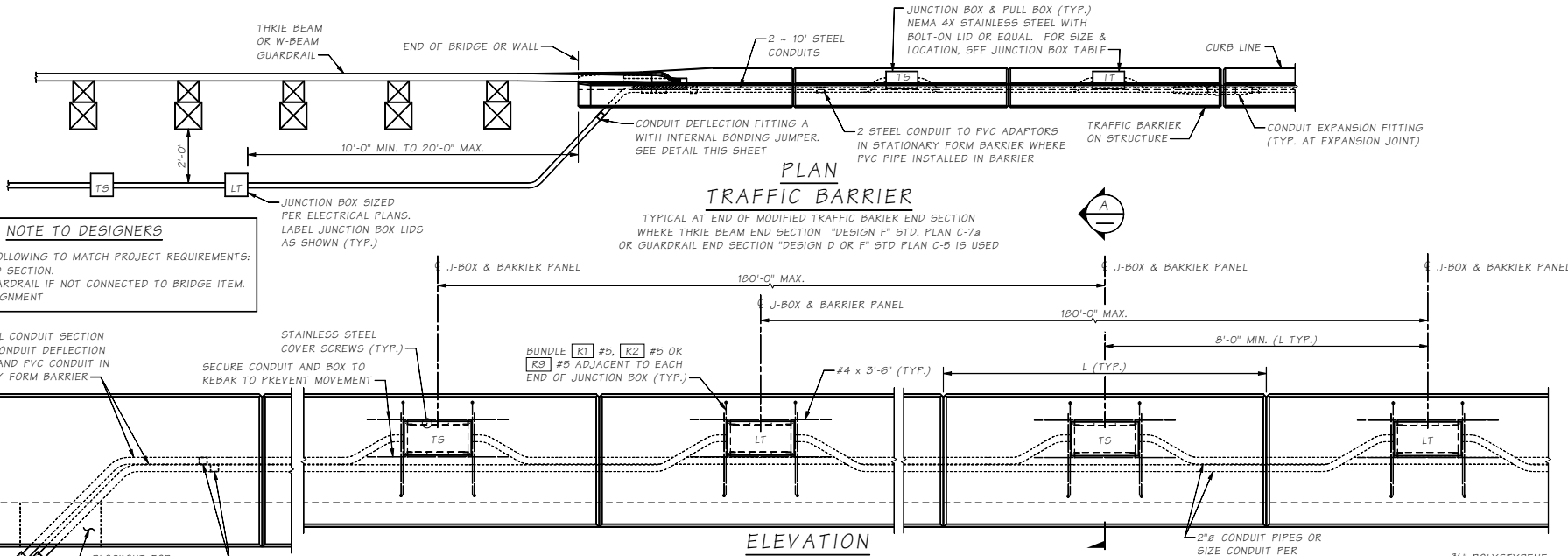

NOTE TO DESIGNERS

MODIFY THE FOLLOWING TO MATCH PROJECT REQUIREMENTS:
1. BARRIER END SECTION.
2. REMOVE GUARDRAIL IF NOT CONNECTED TO BRIDGE ITEM.
3. CONDUIT ALIGNMENT

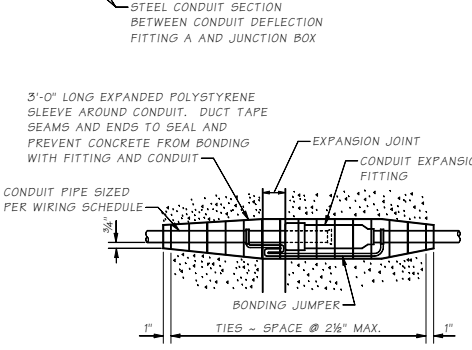

CONDUIT EXPANSION FITTING

CONDUIT FITTING - (TYPE AX FOR MOVEMENT OF ± 2") AT BRIDGE EXPANSION JOINTS

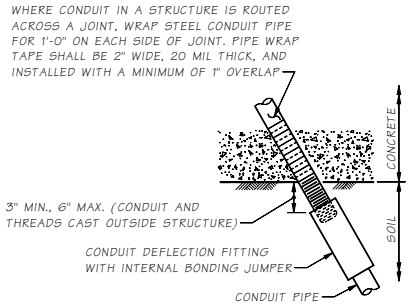

CONDUIT DEFLECTION FITTING A

CONDUIT FITTING - TYPE DX FOR DEFLECTION OF 30° AND ¾" MOVEMENT. PLACE AT CONDUIT PIPE EXIT FROM STRUCTURE

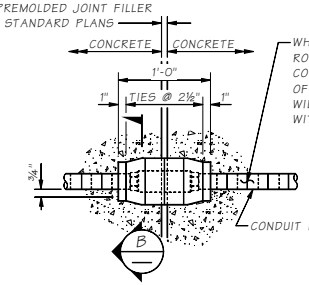

CONDUIT DEFLECTION FITTING B

CONDUIT FITTING - TYPE DX FOR DEFLECTION OF 30° AND ¾" MOVEMENT. CONDUIT PIPES PLACED THROUGH RETAINING WALL TRAFFIC BARRIER SHALL BE FITTED WITH DEFLECTION FITTINGS AT A MAXIMUM SPACING OF 120'. THE DEFLECTION FITTINGS SHALL BE PLACED AT THE TRAFFIC BARRIER OPEN JOINT THAT COINCIDES WITH THE RETAINING WALL STEM EXPANSION JOINT NEAREST TO THE TRANSVERSE CONSTRUCTION JOINT IN THE WALL FOOTING.

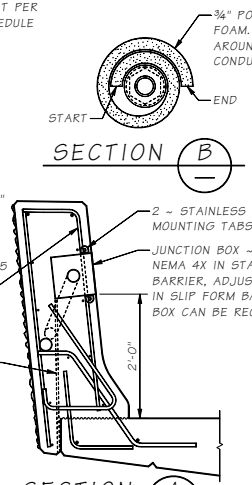

Bridge Design Engr.	M:\STANDARDS\Traffic Barriers\Shape F\42IN SHAPE F BARRIER SHT 3.MAN				REGION NO.	STATE	FED. AID PROJ. NO.	SHEET NO.	TOTAL SHEETS
Supervisor					10	WASH.			
Designed By					JOB NUMBER				
Checked By									
Detailed By									
Bridge Projects Engr.									
Prelim. Plan By									
Architect/Specialist	DATE	REVISION	BY	APPD					

BRIDGE AND STRUCTURES OFFICE

Washington State Department of Transportation

STANDARD TRAFFIC BARRIER

TRAFFIC BARRIER - SHAPE F 42" DETAIL 3 OF 3

BRIDGE SHEET NO.

SHEET OF SHEETS

SR SHEET NO. JOB NO. 10.2-A5-3

Thu Sep 02 13:58:53 2010

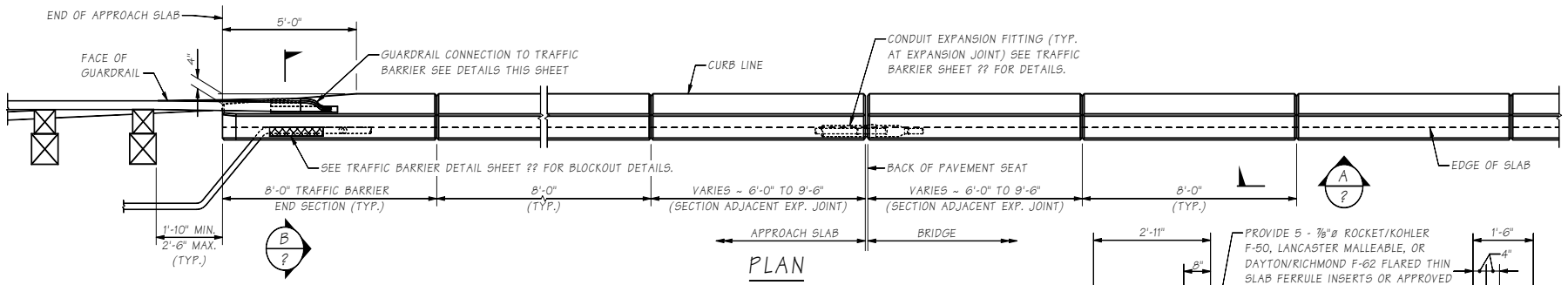

PLAN
TRAFFIC BARRIER

BARRIER CONTINUOUS BETWEEN ROADWAY EXPANSION JOINTS.
CONSTRUCTION JOINTS WITH SHEAR KEYS ARE PERMISSIBLE AT DUMMY JOINT LOCATIONS.
FORM JOINTS BETWEEN DUMMY JOINTS SHALL NOT BE PERMITTED.

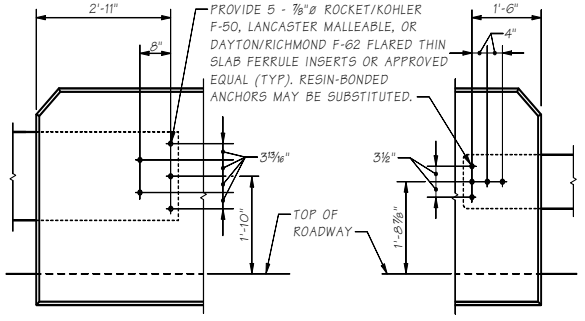

THRIE BEAM END SECTION DESIGN "F" (SEE STD. PLAN C-7a)

W-BEAM END SECTION DESIGN "F" (SEE STD. PLAN C-7)

OUTSIDE ELEVATION
TRAFFIC BARRIER - GUARDRAIL CONNECTION

(WHERE SHOWN ON LAYOUT)

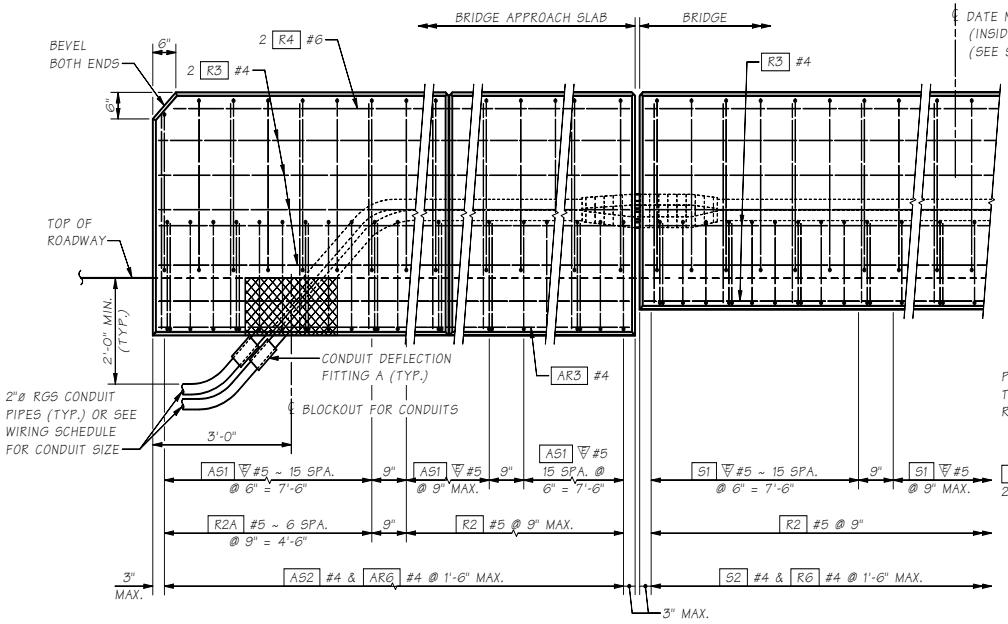

OUTSIDE ELEVATION
END OF TRAFFIC BARRIER

SHOWN WITH APPROACH SLAB

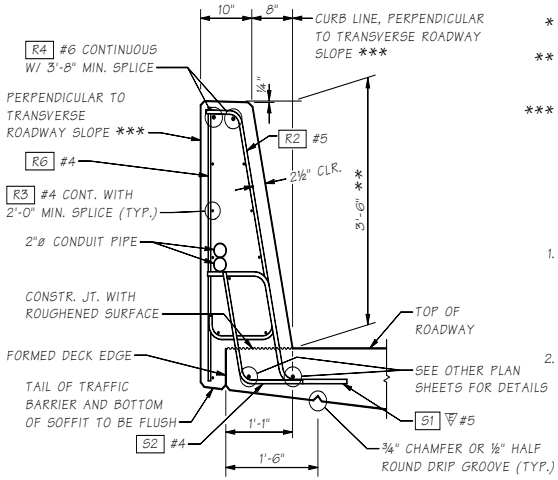

* TOE HEIGHT MAY VARY, 2" MIN. TO 6" MAX.

** HEIGHT MAY VARY IF REQUIRED TO PROVIDE A PROFILE PLEASING TO THE EYE

*** FOR TRANSVERSE ROADWAY SLOPES GREATER THAN 8%, CHANGE THE NOTE TO THE FOLLOWING:
FOR THE LOW SIDE OF THE BRIDGE OR MEDIAN BARRIER - "PERPENDICULAR TO 8% TRANSVERSE ROADWAY SLOPE"
FOR THE HIGH SIDE OF THE BRIDGE BARRIER - "PERPENDICULAR TO TRANSVERSE ROADWAY SLOPE"

NOTE TO DESIGNERS

1. If transverse roadway slope is greater than 8%, S1 and S2 bar bends need to be modified to account for the difference between the actual slope and 8% on the low side only of the bridge or median barrier. The barrier geometry needs to be checked also.
2. The non-applicable text should be removed from the actual bridge plans.

NW REGION:

TERMINATE EACH CONDUIT PIPE AT SEPARATE TYPE 1 JUNCTION BOXES OFF END OF BRIDGE AS SHOWN ON LAYOUT.

TYPICAL SECTION
TRAFFIC BARRIER

SHOWN ON BRIDGE

Bridge Design Engr.	M:\STANDARDS\Traffic Barriers\Single Slope\SS42TB1-TL4.MAN				REGION NO.	STATE	FED. AID PROJ. NO.	SHEET NO.	TOTAL SHEETS
Supervisor					10	WASH.			
Designed By					JOB NUMBER				
Checked By									
Detailed By									
Bridge Projects Engr.									
Prelim. Plan By									
Architect/Specialist	DATE	REVISION	BY	APP'D					

BRIDGE AND STRUCTURES OFFICE

Washington State Department of Transportation

STANDARD TRAFFIC BARRIERS

TRAFFIC BARRIER - SINGLE SLOPE 42" DETAILS 1 OF 3

BRIDGE SHEET NO. | SHEET | OF | SHEETS

Last revised on : 06/23/2010

10.2-A6-1A

Thu Sep 02 14:04:20 2010

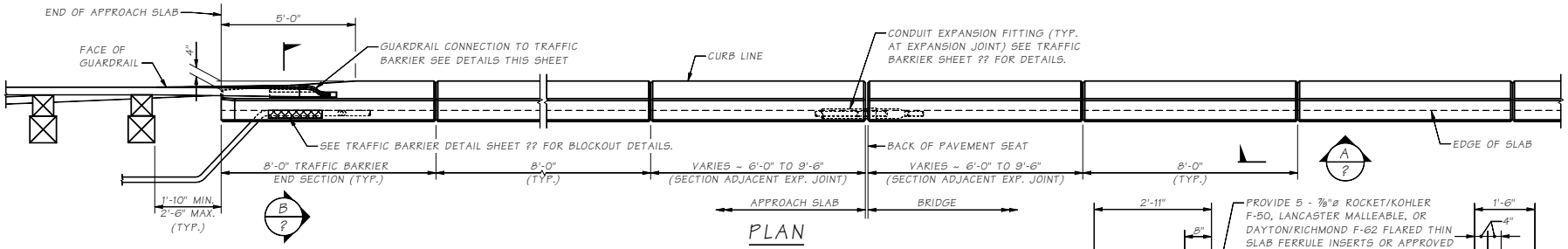

PLAN
TRAFFIC BARRIER

BARRIER CONTINUOUS BETWEEN ROADWAY EXPANSION JOINTS.
CONSTRUCTION JOINTS WITH SHEAR KEYS ARE PERMISSIBLE AT DUMMY JOINT LOCATIONS.
FORM JOINTS BETWEEN DUMMY JOINTS SHALL NOT BE PERMITTED.

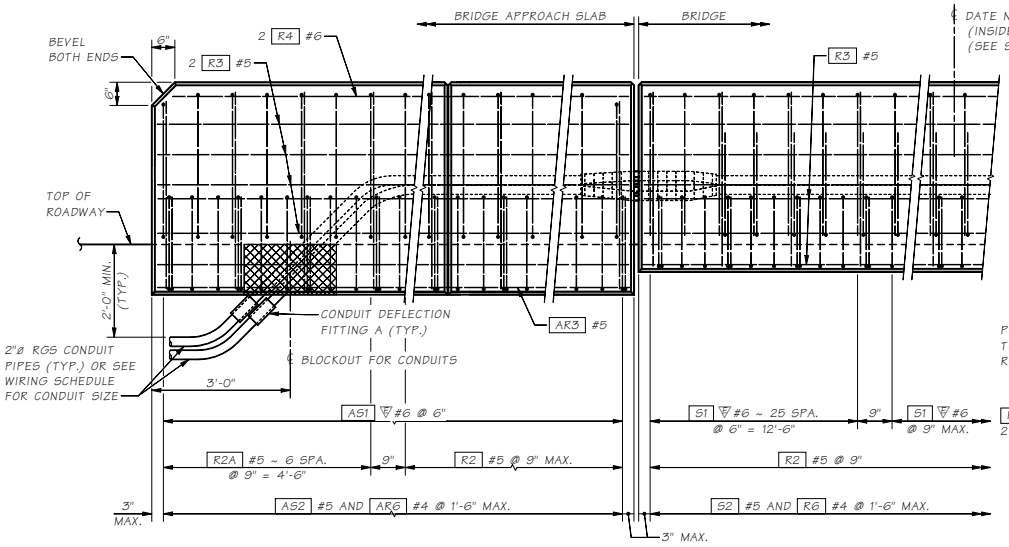

OUTSIDE ELEVATION
END OF TRAFFIC BARRIER

SHOWN WITH APPROACH SLAB

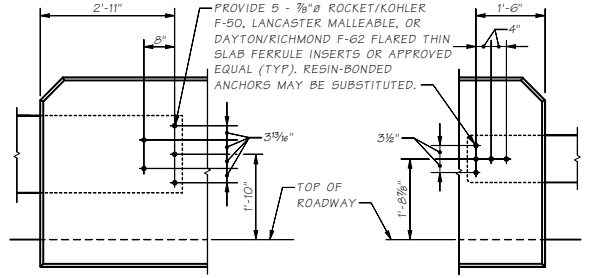

THRIE BEAM END SECTION DESIGN "F" (SEE STD. PLAN C-7a)

W-BEAM END SECTION DESIGN "F" (SEE STD. PLAN C-7)

OUTSIDE ELEVATION
TRAFFIC BARRIER - GUARDRAIL CONNECTION

(WHERE SHOWN ON LAYOUT)

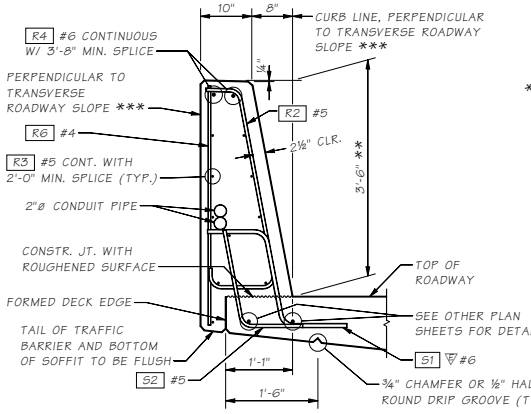

* TOE HEIGHT MAY VARY, 2" MIN. TO 6" MAX.

** HEIGHT MAY VARY IF REQUIRED TO PROVIDE A PROFILE PLEASING TO THE EYE

*** FOR TRANSVERSE ROADWAY SLOPES GREATER THAN 8%, CHANGE THE NOTE TO THE FOLLOWING:
FOR THE LOW SIDE OF THE BRIDGE OR MEDIAN BARRIER - "PERPENDICULAR TO 8% TRANSVERSE ROADWAY SLOPE"
FOR THE HIGH SIDE OF THE BRIDGE BARRIER - "PERPENDICULAR TO TRANSVERSE ROADWAY SLOPE"

NOTE TO DESIGNERS

1. If transverse roadway slope is greater than 8%, S1 and S2 bar bends need to be modified to account for the difference between the actual slope and 8% on the low side only of the bridge or median barrier. The barrier geometry needs to be checked also.
2. The non-applicable text should be removed from the actual bridge plans.

NW REGION:

TERMINATE EACH CONDUIT PIPE AT SEPARATE TYPE 1 JUNCTION BOXES OFF END OF BRIDGE AS SHOWN ON LAYOUT.

TYPICAL SECTION
TRAFFIC BARRIER

SHOWN ON BRIDGE

Bridge Design Engr.	M:\STANDARDS\Traffic Barriers\Single Slope\SS42TB1-TL5.MAN								
Supervisor					REGION NO.	STATE	FED. AID PROJ. NO.	SHEET NO.	TOTAL SHEETS
Designed By					10	WASH.			
Checked By					JOB NUMBER				
Detailed By									
Bridge Projects Engr.									
Prelim. Plan By									
Architect/Specialist	DATE	REVISION	BY	APP'D					

BRIDGE AND STRUCTURES OFFICE

Washington State Department of Transportation

STANDARD TRAFFIC BARRIERS

TRAFFIC BARRIER - SINGLE SLOPE 42" DETAILS 1 OF 3

BRIDGE SHEET NO. | SHEET | OF | SHEETS

Last revised on : 06/23/2010

SHEET NO. 10.2-A6-1B

Thu Sep 02 14:04:24 2010

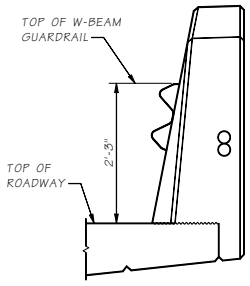

END VIEW

W-BEAM SHOWN WITH "D" CONNECTION

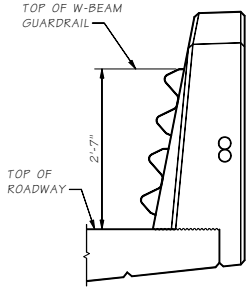

END VIEW

DUAL W-BEAM SHOWN WITH "D" CONNECTION

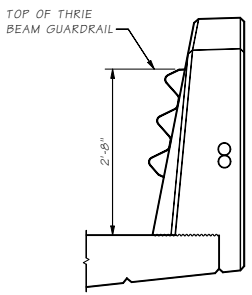

END VIEW

THRIE BEAM SHOWN WITH "D" CONNECTION

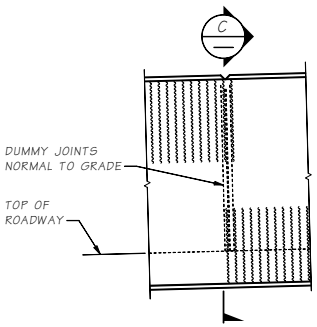

VIEW A/1

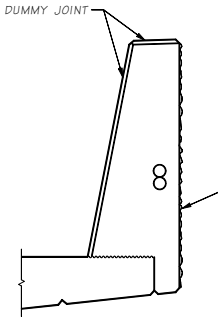

SECTION C/—

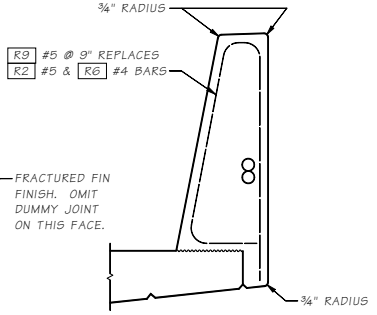

SLIPFORM ALTERNATE

SEE "TYPICAL SECTION - TRAFFIC BARRIER" FOR ADDITIONAL DETAILS.

THE CONTRACTOR IS ADVISED THAT THE SLIPFORM CONSTRUCTION METHOD IS A PATENTED PROPRIETARY PROCESS FOR BARRIERS WITH A FRACTURED FIN FINISH.

JUNCTION BOX LOCATIONS

STATION	OFFSET	"TS" OR "LT"

TS = TRAFFIC SYSTEM
LT = LIGHTING SYSTEM

JUNCTION BOX LOCATIONS SHOWN ARE APPROXIMATE. CENTER JUNCTION BOX INSTALLATION BETWEEN BARRIER DUMMY JOINTS.

INSTALL ALL CONDUIT RUNS TO DRAIN TO A BRIDGE END OR PROVIDE DRAIN AT ALL LOW POINTS IN CONDUIT RUN ON BRIDGE.

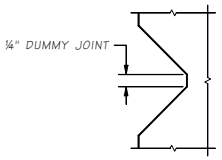

DUMMY JOINT DETAIL

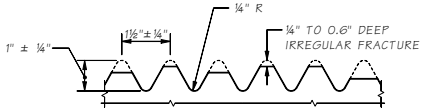

FRACTURED FIN FINISH

BENDING DIAGRAM

ALL DIMENSIONS ARE OUT TO OUT.
≠ = DIMENSIONS TO POINTS OF INTERSECTION.

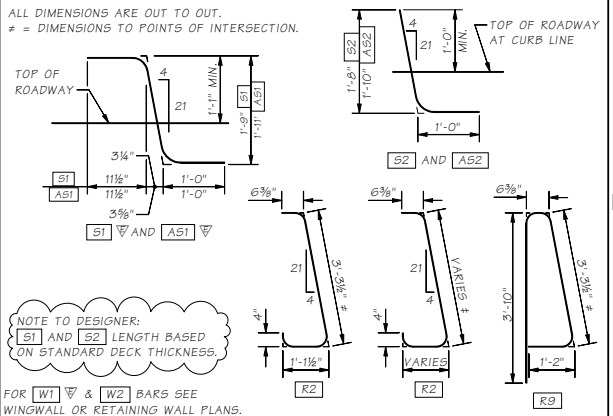

NOTE TO DESIGNER:
S1 AND S2 LENGTH BASED ON STANDARD DECK THICKNESS.

FOR W1 ▽ & W2 BARS SEE WINGWALL OR RETAINING WALL PLANS.

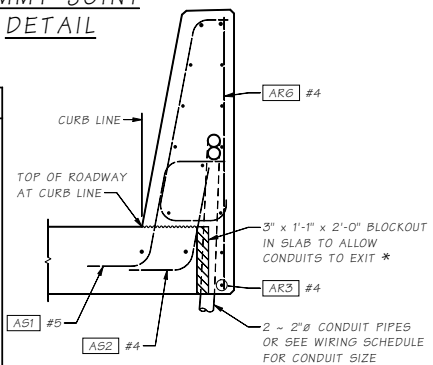

SECTION B/? APPROACH SLAB

FOR DETAILS NOT SHOWN SEE "OUTSIDE ELEVATION" AND "TYPICAL SECTION - TRAFFIC BARRIER"

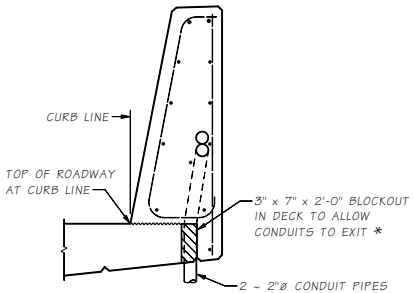

SECTION B/? BRIDGE

FOR DETAILS NOT SHOWN SEE "OUTSIDE ELEVATION" AND "TYPICAL SECTION - TRAFFIC BARRIER"

* BLOCKOUT WIDTH MAY BE INCREASED TO 6" TO ALLOW CONDUITS OF A LARGER DIAMETER THAN 2" TO EXIT BARRIER OR WALL WITHOUT REBAR STEEL CONFLICT

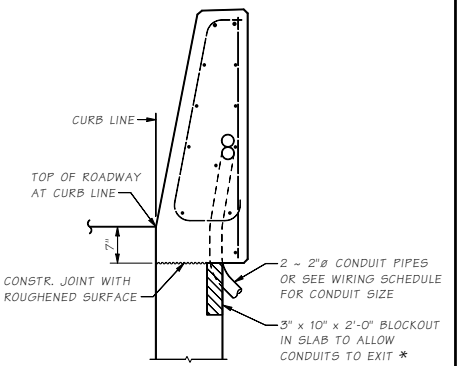

SECTION B/? WALL

DETAIL FOR WINGWALL. FOR REINFORCING NOT SHOWN SEE WINGWALL PLANS.

Bridge Design Engr.	M:\STANDARDS\Traffic Barriers\Single Slope\SS42TB2-TL4.MAN				REGION NO.	STATE	FED. AID PROJ. NO.	SHEET NO.	TOTAL SHEETS
Supervisor					10	WASH.			
Designed By					JOB NUMBER				
Checked By									
Detailed By									
Bridge Projects Engr.									
Prelim. Plan By									
Architect/Specialist	DATE	REVISION	BY	APP'D					

BRIDGE AND STRUCTURES OFFICE

Washington State Department of Transportation

STANDARD TRAFFIC BARRIERS

TRAFFIC BARRIER - SINGLE SLOPE 42" DETAILS 2 OF 3

BRIDGE SHEET NO. — SHEET — OF — SHEETS

SHEET — JOB NO. — SR — 10.2-A6-2A

Thu Sep 02 14:04:27 2010

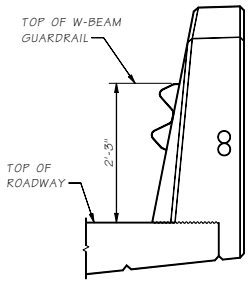

END VIEW

W-BEAM SHOWN WITH "D" CONNECTION

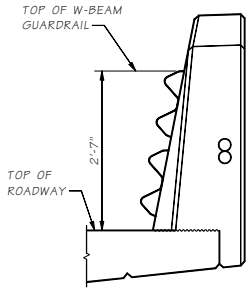

END VIEW

DUAL W-BEAM SHOWN WITH "D" CONNECTION

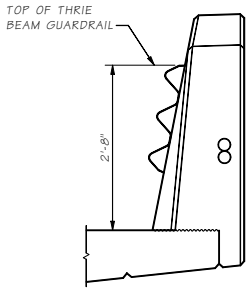

END VIEW

THRIE BEAM SHOWN WITH "D" CONNECTION

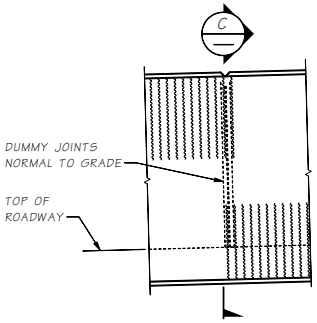

VIEW A/1

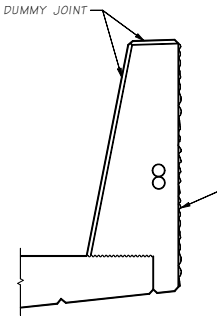

SECTION C/—

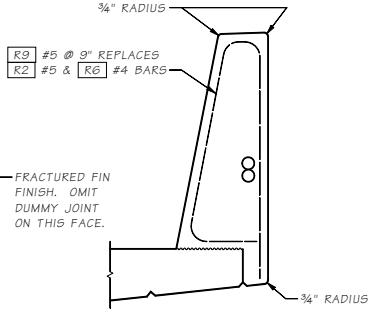

SLIPFORM ALTERNATE

SEE "TYPICAL SECTION - TRAFFIC BARRIER" FOR ADDITIONAL DETAILS.

THE CONTRACTOR IS ADVISED THAT THE SLIPFORM CONSTRUCTION METHOD IS A PATENTED PROPRIETARY PROCESS FOR BARRIERS WITH A FRACTURED FIN FINISH.

JUNCTION BOX LOCATIONS

STATION	OFFSET	"TS" OR "LT"

TS = TRAFFIC SYSTEM
LT = LIGHTING SYSTEM

JUNCTION BOX LOCATIONS SHOWN ARE APPROXIMATE. CENTER JUNCTION BOX INSTALLATION BETWEEN BARRIER DUMMY JOINTS.

INSTALL ALL CONDUIT RUNS TO DRAIN TO A BRIDGE END OR PROVIDE DRAIN AT ALL LOW POINTS IN CONDUIT RUN ON BRIDGE.

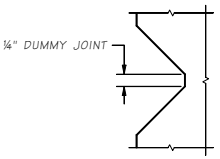

DUMMY JOINT DETAIL

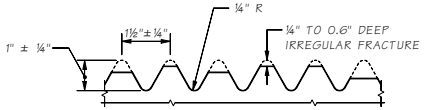

FRACTURED FIN FINISH

BENDING DIAGRAM

ALL DIMENSIONS ARE OUT TO OUT.
≠ = DIMENSIONS TO POINTS OF INTERSECTION.

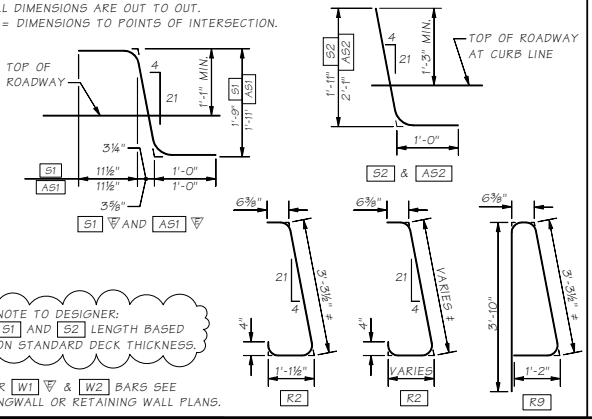

NOTE TO DESIGNER:
S1 AND S2 LENGTH BASED ON STANDARD DECK THICKNESS.

FOR W1 & W2 BARS SEE WINGWALL OR RETAINING WALL PLANS.

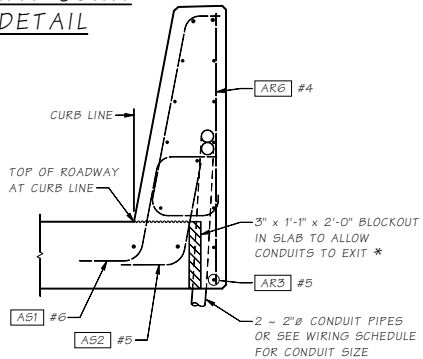

SECTION B/? APPROACH SLAB

FOR DETAILS NOT SHOWN SEE "OUTSIDE ELEVATION" AND "TYPICAL SECTION - TRAFFIC BARRIER"

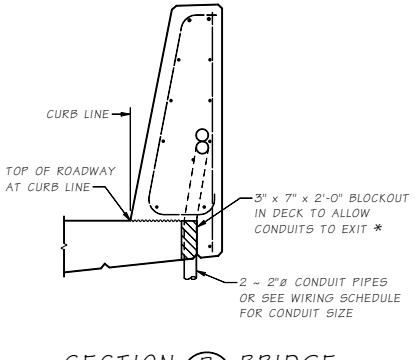

SECTION B/? BRIDGE

FOR DETAILS NOT SHOWN SEE "OUTSIDE ELEVATION" AND "TYPICAL SECTION - TRAFFIC BARRIER"

* BLOCKOUT WIDTH MAY BE INCREASED TO 6" TO ALLOW CONDUITS OF A LARGER DIAMETER THAN 2" TO EXIT BARRIER OR WALL WITHOUT REBAR STEEL CONFLICT

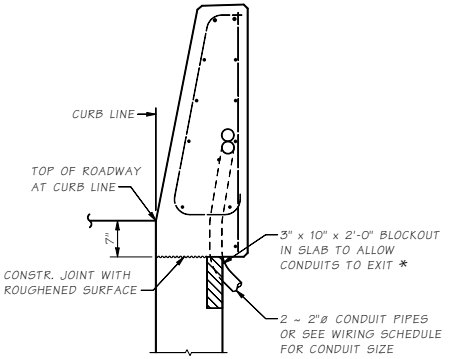

SECTION B/? WALL

DETAIL FOR WINGWALL. FOR REINFORCING NOT SHOWN SEE WINGWALL PLANS.

Bridge Design Engr.	M:\STANDARDS\Traffic Barriers\Single Slope\SS42TB2-TL5.MAN				REGION NO.	STATE	FED. AID PROJ. NO.	SHEET NO.	TOTAL SHEETS
Supervisor					10	WASH.			
Designed By					JOB NUMBER				
Checked By									
Detailed By									
Bridge Projects Engr.									
Prelim. Plan By									
Architect/Specialist	DATE	REVISION	BY	APP'D					

BRIDGE AND STRUCTURES OFFICE

Washington State Department of Transportation

STANDARD TRAFFIC BARRIERS

TRAFFIC BARRIER - SINGLE SLOPE 42"
DETAILS 2 OF 3

BRIDGE SHEET NO.
SHEET
OF
SHEETS

SHEET
JOB NO.
SR
10.2-A6-2B

Thu Sep 02 14:04:30 2010

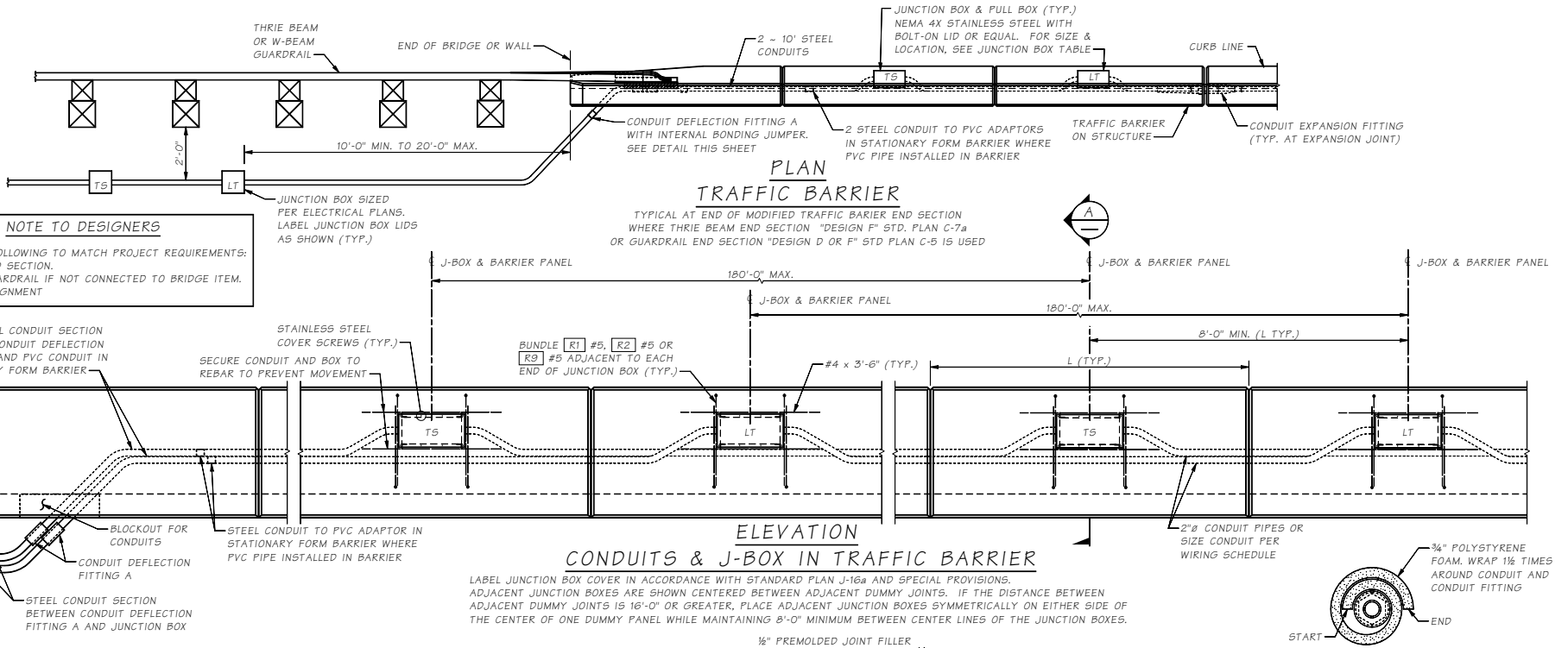

NOTE TO DESIGNERS

MODIFY THE FOLLOWING TO MATCH PROJECT REQUIREMENTS:
1. BARRIER END SECTION.
2. REMOVE GUARDRAIL IF NOT CONNECTED TO BRIDGE ITEM.
3. CONDUIT ALIGNMENT

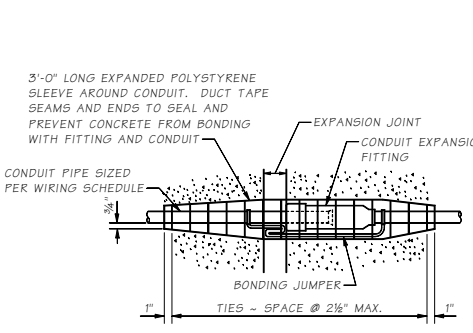

CONDUIT EXPANSION FITTING

CONDUIT FITTING - (TYPE AX FOR MOVEMENT OF ± 2") AT BRIDGE EXPANSION JOINTS

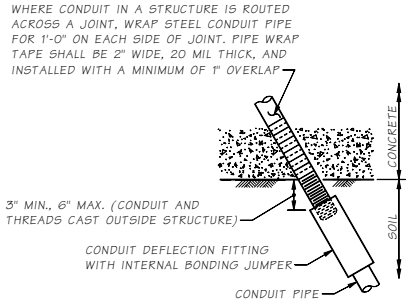

CONDUIT DEFLECTION FITTING A

CONDUIT FITTING - TYPE DX FOR DEFLECTION OF 30° AND ¾" MOVEMENT. PLACE AT CONDUIT PIPE EXIT FROM STRUCTURE

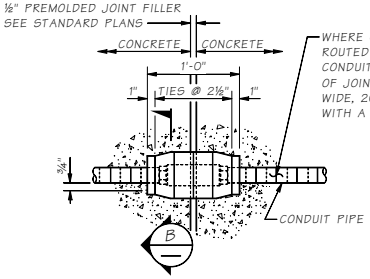

CONDUIT DEFLECTION FITTING B

CONDUIT FITTING - TYPE DX FOR DEFLECTION OF 30° AND ¾" MOVEMENT. CONDUIT PIPES PLACED THROUGH RETAINING WALL TRAFFIC BARRIER SHALL BE FITTED WITH DEFLECTION FITTINGS AT A MAXIMUM SPACING OF 120'. THE DEFLECTION FITTINGS SHALL BE PLACED AT THE TRAFFIC BARRIER OPEN JOINT THAT COINCIDES WITH THE RETAINING WALL STEM EXPANSION JOINT NEAREST TO THE TRANSVERSE CONSTRUCTION JOINT IN THE WALL FOOTING.

SECTION B

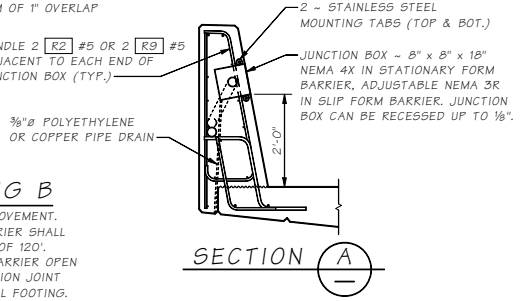

SECTION A

Bridge Design Engr.	M:\STANDARDS\Traffic Barriers\Single Slope\SS42TB3.man									
Supervisor						PROJECT NO.	STATE	FED. AID PROJ. NO.	SHEET NO.	TOTAL SHEETS
Designed By						10	WASH.			
Checked By						JOB NUMBER				
Detailed By										
Bridge Projects Engr.										
Prelim. Plan By										
Architect/Specialist	DATE	REVISION	BY	APP'D						

BRIDGE AND STRUCTURES OFFICE

Washington State Department of Transportation

STANDARD TRAFFIC BARRIERS

TRAFFIC BARRIER - SINGLE SLOPE 42" DETAILS 3 OF 3

BRIDGE SHEET NO. SHEET OF SHEETS

JOB NO. 10.2-A6-3 SHEET SR

Thu Sep 02 14:04:35 2010

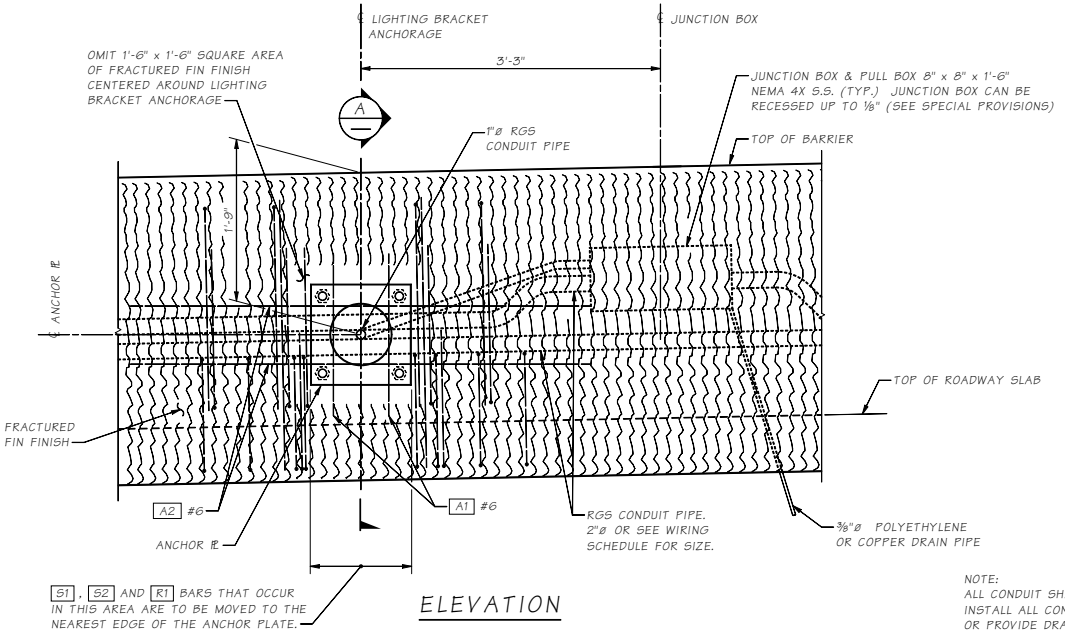

ELEVATION

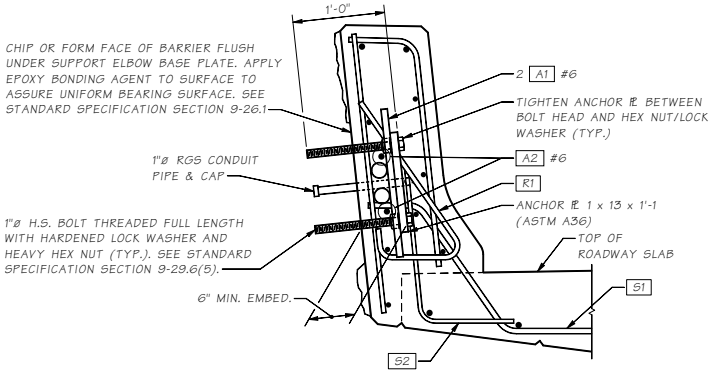

SECTION A

SEE TRAFFIC BARRIER SHEETS FOR INFORMATION NOT SHOWN.

NOTE:
ALL CONDUIT SHALL BE RIGID GALVANIZED STEEL (RGS).
INSTALL ALL CONDUIT RUNS TO DRAIN TO A BRIDGE END OR PROVIDE DRAIN AT ALL LOW POINTS WITHIN CONDUIT RUN.
SEE "TRAFFIC BARRIER SHEETS" FOR BARRIER DIMENSIONS.

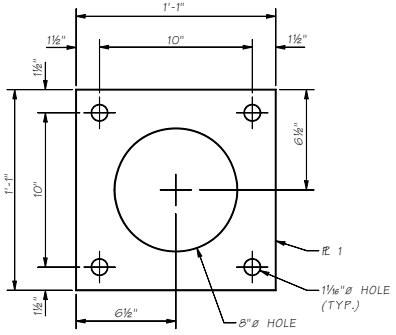

ANCHOR PLATE

GALVANIZE PER AASHTO M 111

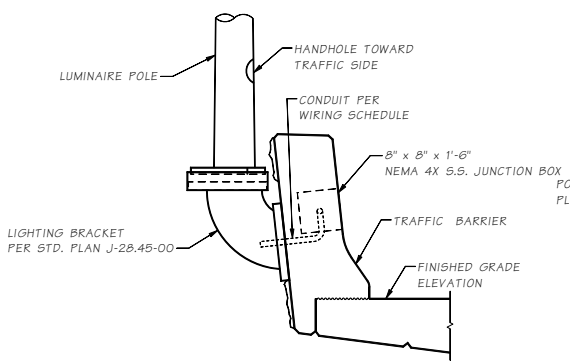

ELEVATION PROFILE
LUMINAIRE SUPPORT

SHOWN FOR BRIDGE, WALLS ARE SIMILAR

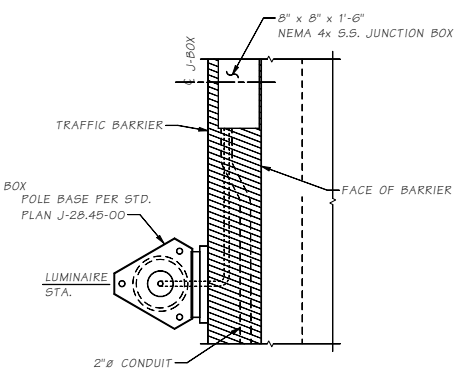

PLAN

LUMINAIRE POLE LOCATIONS ON BRIDGE & WALLS	
STATION	OFFSET
XXX 0+000.000	0.000 RT.
XXX 0+000.000	0.000 RT.

ANCHORAGE BARLIST			
MARK #	SIZE	LENGTH	BEND TYPE
A1	6	1'-9"	STRAIGHT
A2	6	5'-0"	STRAIGHT

Bridge Design Engr.	M:\STANDARDS\Traffic Barriers\Luminare\LUMANCHORAGE-TBF.man				REGION NO.	STATE	FED. AID PROJ. NO.	SHEET NO.	TOTAL SHEETS
Supervisor					10	WASH.			
Designed By					JOB NUMBER				
Checked By									
Detailed By									
Bridge Projects Engr.									
Prelim. Plan By									
Architect/Specialist	DATE	REVISION	BY	APPD					

BRIDGE AND STRUCTURES OFFICE

Washington State Department of Transportation

STANDARD TRAFFIC BARRIERS

TRAFFIC BARRIER - SHAPE F
LUMINAIRE ANCHORAGE DEATILS

BRIDGE SHEET NO

SHEET OF SHEETS

SR JOB NO. SHEET

Thu Sep 02 13:59:04 2010

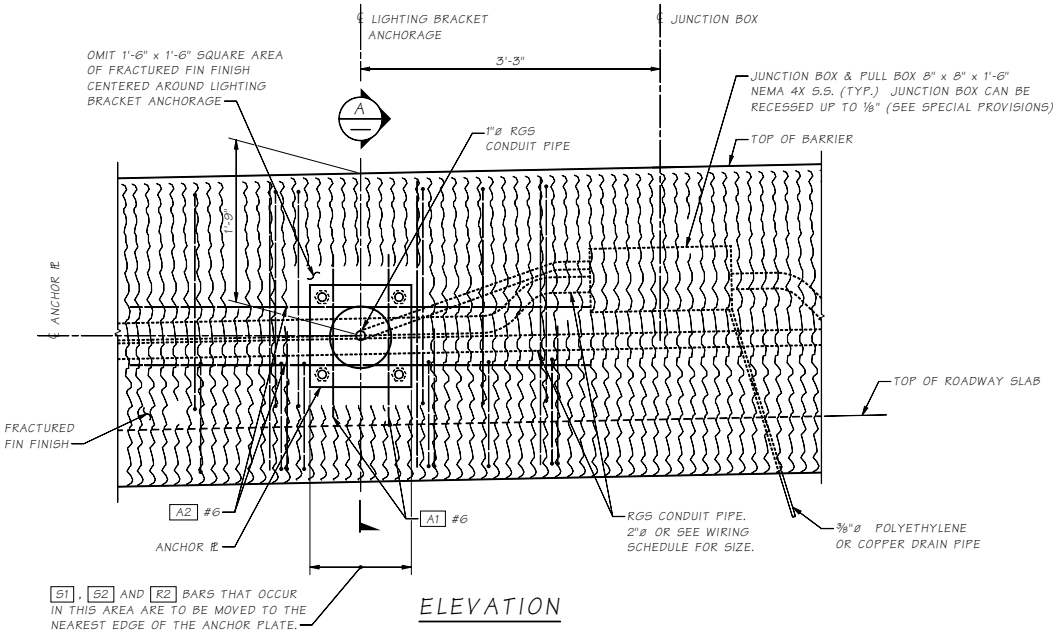

ELEVATION

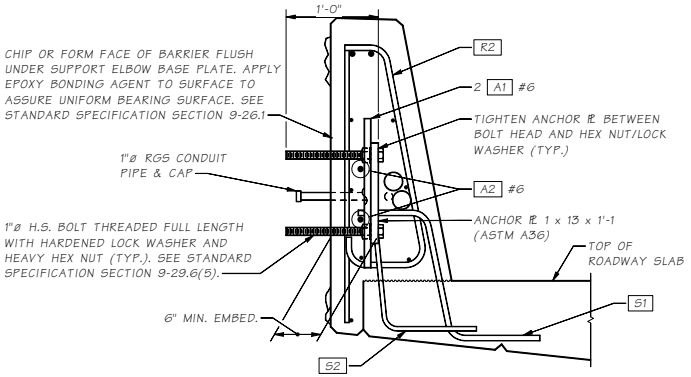

SECTION A

SEE TRAFFIC BARRIER SHEETS FOR INFORMATION NOT SHOWN.

NOTE:
ALL CONDUITS SHALL BE RIGID GALVANIZED STEEL (RGS). INSTALL ALL CONDUIT RUNS TO DRAIN TO A BRIDGE END OR PROVIDE DRAIN AT ALL LOW POINTS WITHIN CONDUIT RUN. SEE "TRAFFIC BARRIER SHEETS" FOR BARRIER DIMENSIONS.

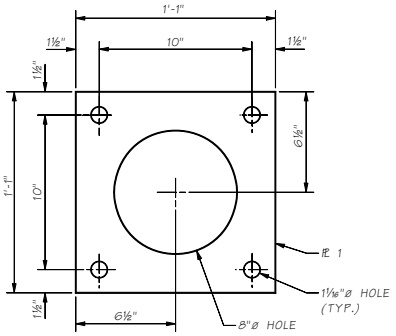

ANCHOR PLATE

GALVANIZE PER AASHTO M 111

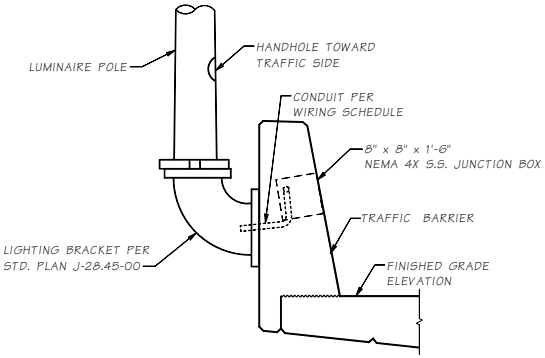

ELEVATION PROFILE
LUMINAIRE SUPPORT

SHOWN FOR BRIDGE, WALLS ARE SIMILAR

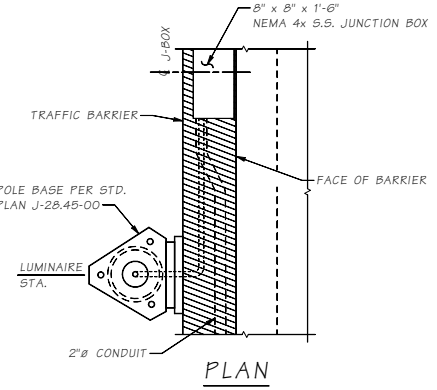

PLAN

LUMINAIRE POLE LOCATIONS ON BRIDGE & WALLS	
STATION	OFFSET
XXX 0+000.000	0.000 RT.
XXX 0+000.000	0.000 RT.

ANCHORAGE BARLIST			
MARK #	SIZE	LENGTH	BEND TYPE
A1	6	1'-9"	STRAIGHT
A2	6	5'-0"	STRAIGHT

Bridge Design Engr.	M:\STANDARDS\Traffic Barriers\Luminare\LUMANCHORAGE-SSTB.MAN				REGION NO.	STATE	FED. AID PROJ. NO.	SHEET NO.	TOTAL SHEETS
Supervisor					10	WASH.			
Designed By					JOB NUMBER				
Checked By									
Detailed By									
Bridge Projects Engr.									
Prelim. Plan By									
Architect/Specialist	DATE	REVISION	BY	APP'D					

BRIDGE AND STRUCTURES OFFICE

Washington State Department of Transportation

STANDARD TRAFFIC BARRIERS

TRAFFIC BARRIER - SINGLE SLOPE LUMINAIRE ANCHORAGE DEATILS

BRIDGE SHEET NO.
SHEET
OF
SHEETS

JOB NO. 10.2-A7-2
SHEET
SR

Thu Sep 02 13:59:07 2010

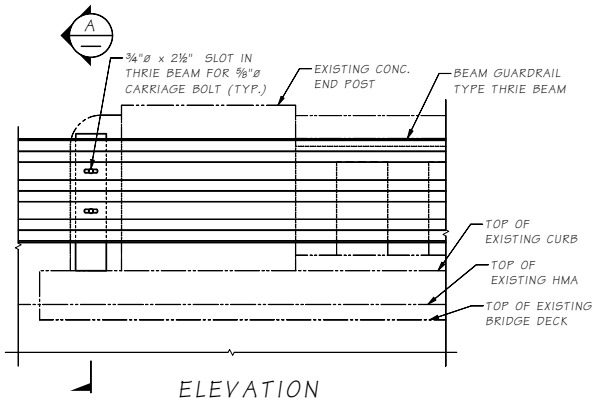

ELEVATION
RAIL END POST

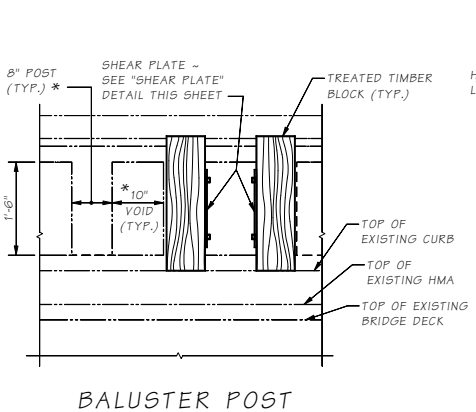

BALUSTER POST
INSIDE ELEVATION
THRIE BEAM NOT SHOWN FOR CLARITY

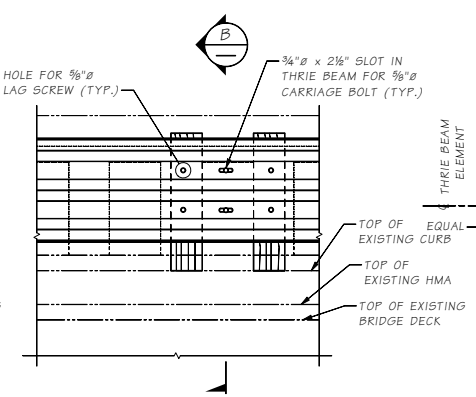

BALUSTER POST
INSIDE ELEVATION

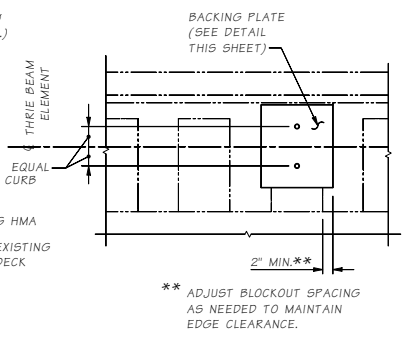

BALUSTER POST
OUTSIDE ELEVATION
THRIE BEAM NOT SHOWN FOR CLARITY

NOTES:

* SEE GENERAL NOTE NO. 5 ON BRIDGE SHEET NO. 1.

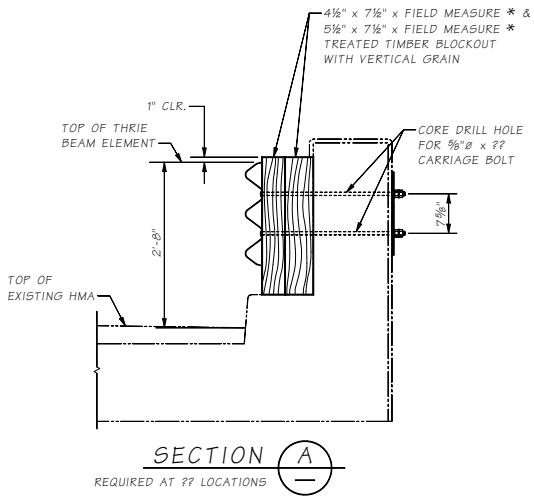

SECTION A
REQUIRED AT ?? LOCATIONS

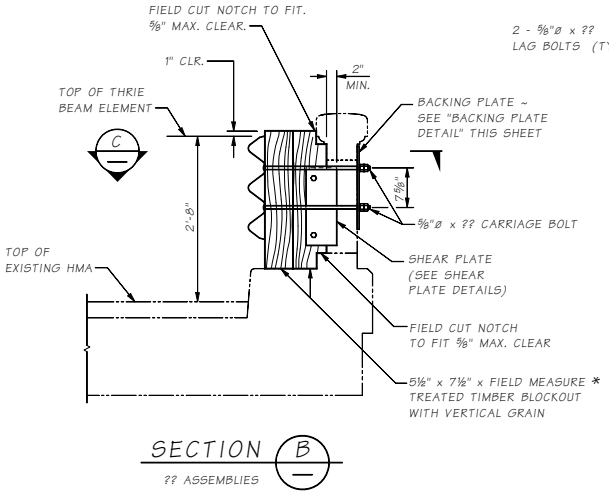

SECTION B
?? ASSEMBLIES

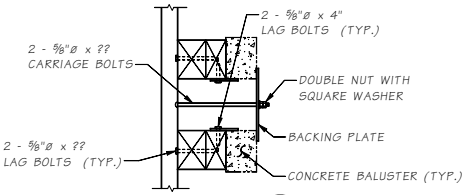

SECTION C

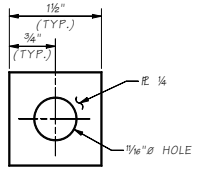

SQUARE WASHER

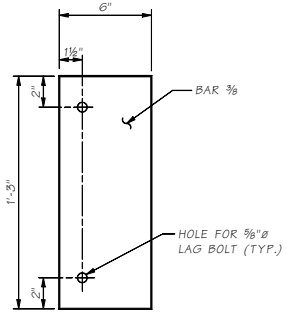

SHEAR PLATE

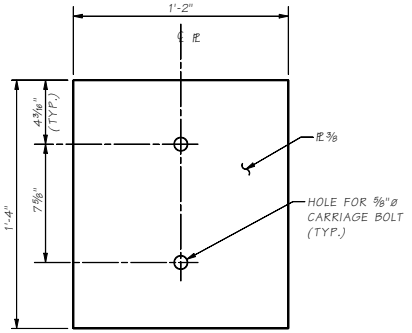

BACKING PLATE
DETAIL

Bridge Design Engr.	M:\STANDARDS\Traffic Barriers\Rail Retrofit\BALUSTER STANDARD.MAN				REGION NO.	STATE	FED. AID PROJ. NO.	SHEET NO.	TOTAL SHEETS
Supervisor					10	WASH.			
Designed By					JOB NUMBER				
Checked By									
Detailed By									
Bridge Projects Engr.									
Prelim. Plan By									
Architect/Specialist	DATE	REVISION	BY	APP'D					

Thu Sep 02 14:04:37 2010

BRIDGE AND STRUCTURES OFFICE

Washington State Department of Transportation

STANDARD RAIL RETROFITS

Thrie Beam Retrofit Concrete Baluster

BRIDGE SHEET NO. 0

SHEET OF SHEETS

SR ___ JOB NO. ___ SHEET 0

10.4-A1-1

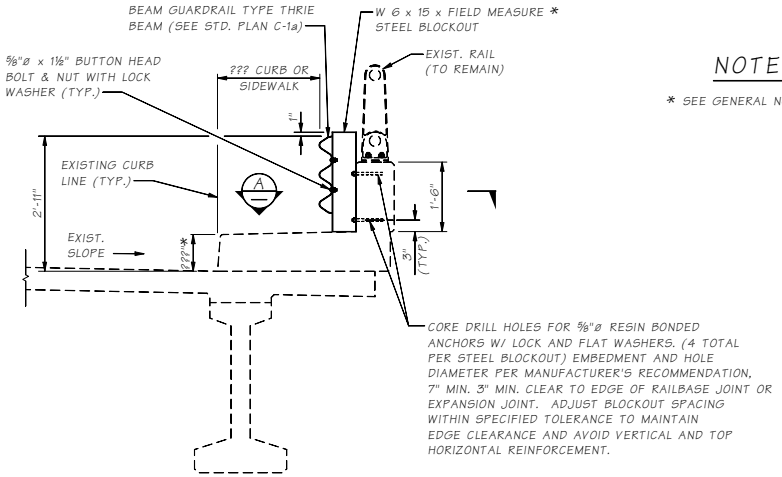

TYPICAL SECTION AT STEEL BLOCKOUT

(??? ASSEMBLIES REQUIRED)

NOTES:

* SEE GENERAL NOTE NO. 5 ON BRIDGE SHEET NO. 1.

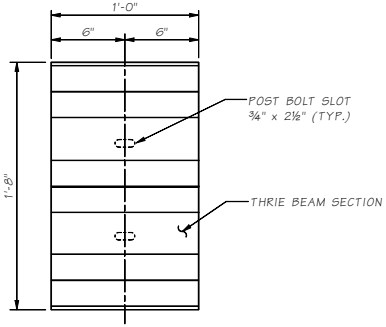

BACKUP PLATE

BACKUP PLATE REQUIRED AT POST WHERE NO THRIE BEAM GUARDRAIL SPLICE OCCURS.

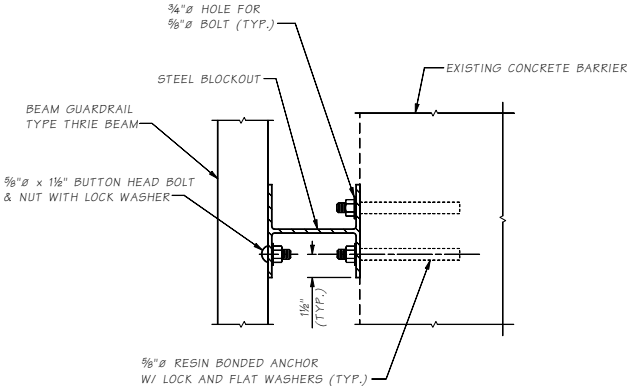

SECTION A

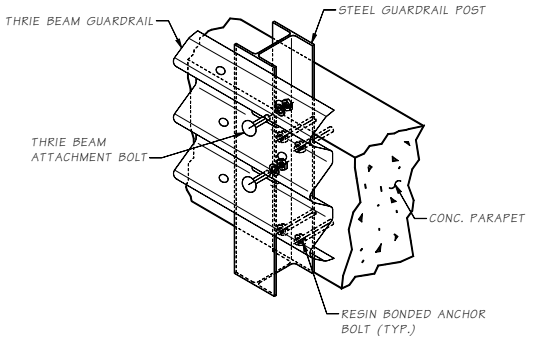

ISOMETRIC VIEW

Bridge Design Engr.	M:\STANDARDS\Traffic Barriers\Rail Retrofit\PARAPET STANDARD.MAN								
Supervisor					REGION NO.	STATE	FED. AID PROJ. NO.	SHEET NO.	TOTAL SHEETS
Designed By					10	WASH.			
Checked By					JOB NUMBER				
Detailed By									
Bridge Projects Engr.									
Prelim. Plan By									
Architect/Specialist	DATE	REVISION	BY	APP'D					

Thu Sep 02 14:04:40 2010

BRIDGE AND STRUCTURES OFFICE

Washington State Department of Transportation

STANDARD RAIL RETROFITS

THRIE BEAM RETROFIT CONCRETE RAILBASE

BRIDGE SHEET NO. 0 SHEET OF SHEETS

SR JOB NO. SHEET 0

10.4-A1-2

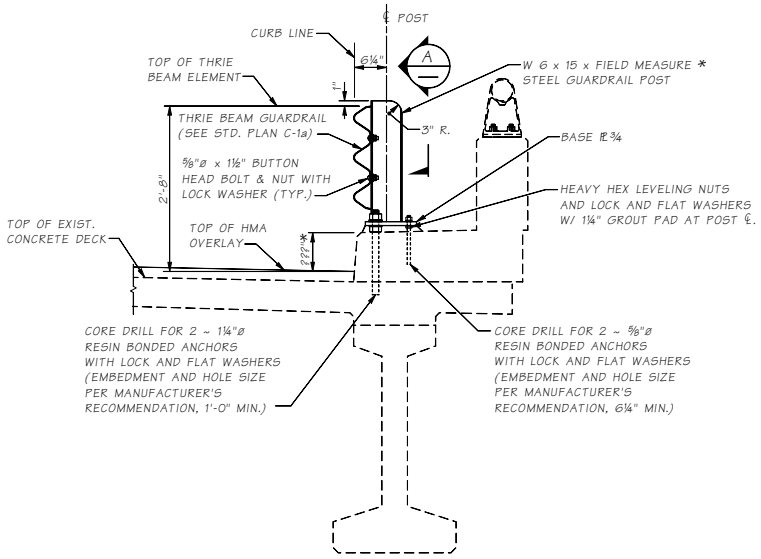

TYPICAL STEEL POST ANCHORAGE

?? POSTS REQUIRED

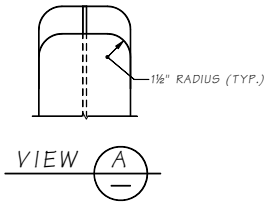

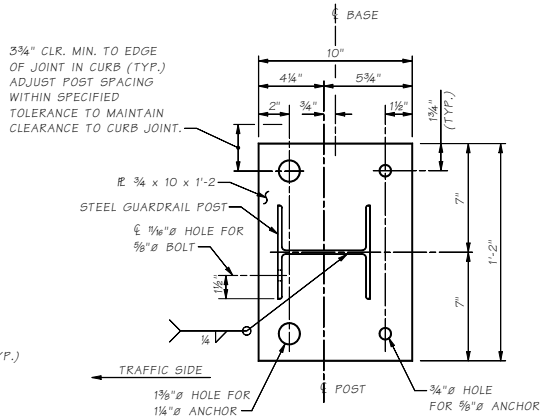

BASE PLATE DETAIL

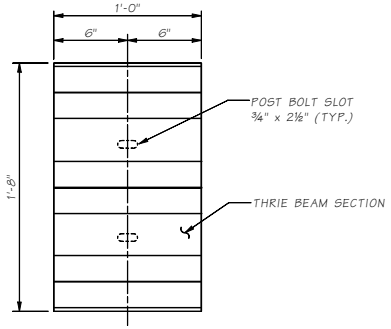

BACKUP PLATE

BACKUP PLATE REQUIRED AT POST WHERE NO THRIE BEAM GUARDRAIL SPLICE OCCURS.

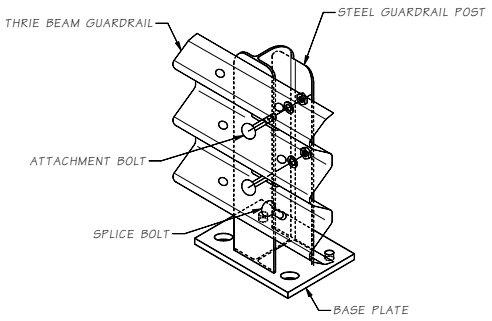

ISOMETRIC VIEW

NOTES:

* SEE GENERAL NOTE NO. 5 ON BRIDGE SHEET NO. 1.

** POST HEIGHT MAY VARY DEPENDING ON CURB HEIGHT. CONTRACTOR TO VERIFY BEFORE FABRICATION OF ASSEMBLIES.

Bridge Design Engr.	M:\STANDARDS\Traffic Barriers\Rail Retrofit\STEEL POST STANDARD.MAN				REGION NO.	STATE	FED. AID PROJ. NO.	SHEET NO.	TOTAL SHEETS
Supervisor					10	WASH.			
Designed By					JOB NUMBER				
Checked By									
Detailed By									
Bridge Projects Engr.									
Prelim. Plan By									
Architect/Specialist	DATE	REVISION	BY	APP'D					

Thu Sep 02 14:04:42 2010

BRIDGE AND STRUCTURES OFFICE

Washington State Department of Transportation

STANDARD RAIL RETROFITS

THRIE BEAM RETROFIT CONCRETE CURB

BRIDGE SHEET NO. 0 SHEET OF SHEETS

SR JOB NO. SHEET 0

10.4-A1-3

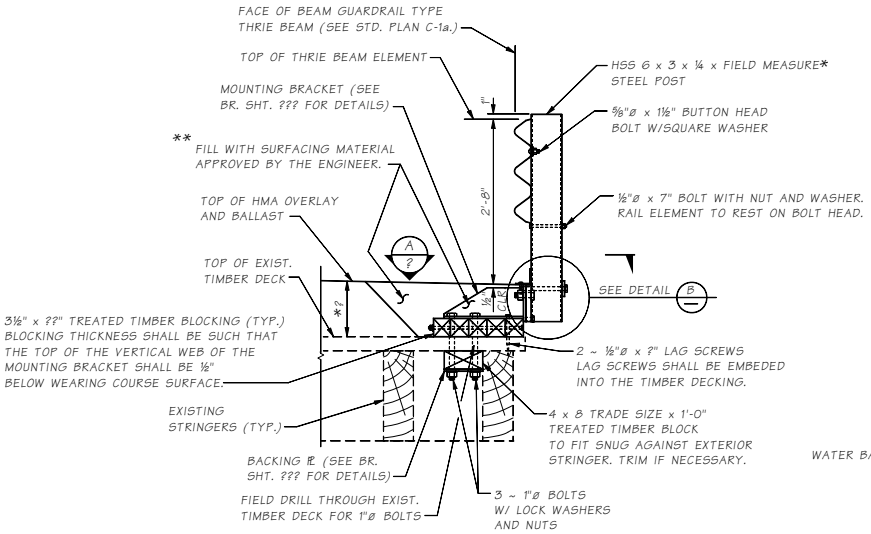

GUARDRAIL POST ASSEMBLY
(??? ASSEMBLIES)

** THICKNESS OF SURFACING MATERIAL SHALL BE SUCH THAT THE TOP OF THE VERTICAL WEB OF THE MOUNTING BRACKET SHALL BE ½" BELOW WEARING COURSE SURFACE.

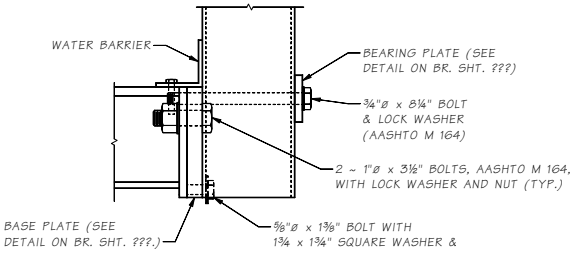

DETAIL B

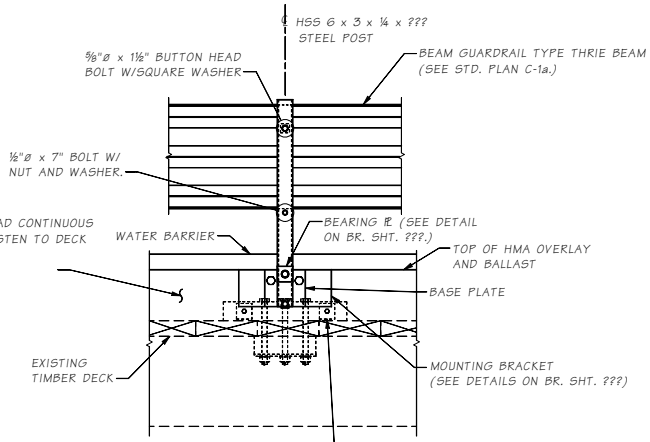

OUTSIDE ELEVATION AT TYPICAL GUARDRAIL POST

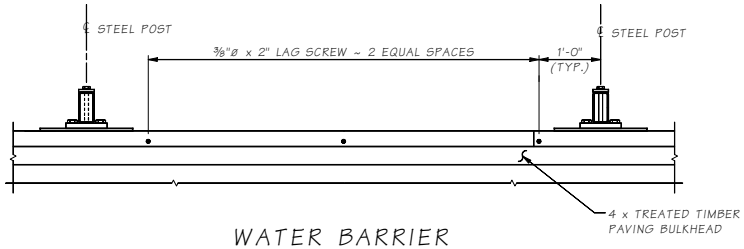

WATER BARRIER PLAN

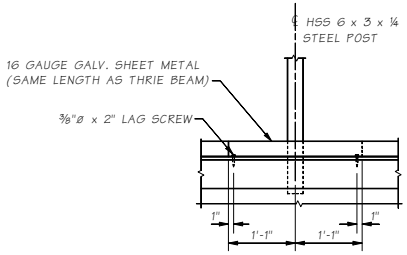

WATER BARRIER SPLICE DETAIL

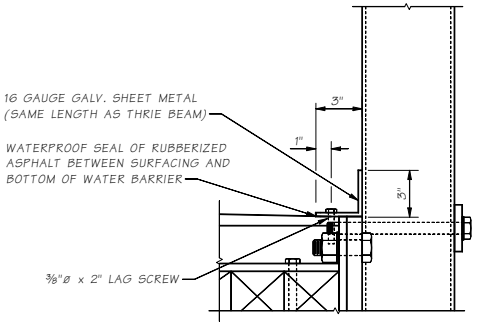

WATER BARRIER DETAIL

Bridge Design Engr.	M:\STANDARDS\Traffic Barriers\Rail Retrofit\TIMBER STANDARD NO 1.MAN				REGION NO.	STATE	FED. AID PROJ. NO.	SHEET NO.	TOTAL SHEETS
Supervisor					10	WASH.			
Designed By					JOB NUMBER				
Checked By									
Detailed By									
Bridge Projects Engr.									
Prelim. Plan By									
Architect/Specialist	DATE	REVISION	BY	APP'D					

Thu Sep 02 14:04:44 2010

BRIDGE AND STRUCTURES OFFICE

Washington State Department of Transportation

STANDARD RAIL RETROFITS

WP THRIE BEAM RETROFIT SL1 - DETAILS 1 OF 2

BRIDGE SHEET NO. 0 | SHEET OF SHEETS

SR | JOB NO. | SHEET 0

10.4-A1-4

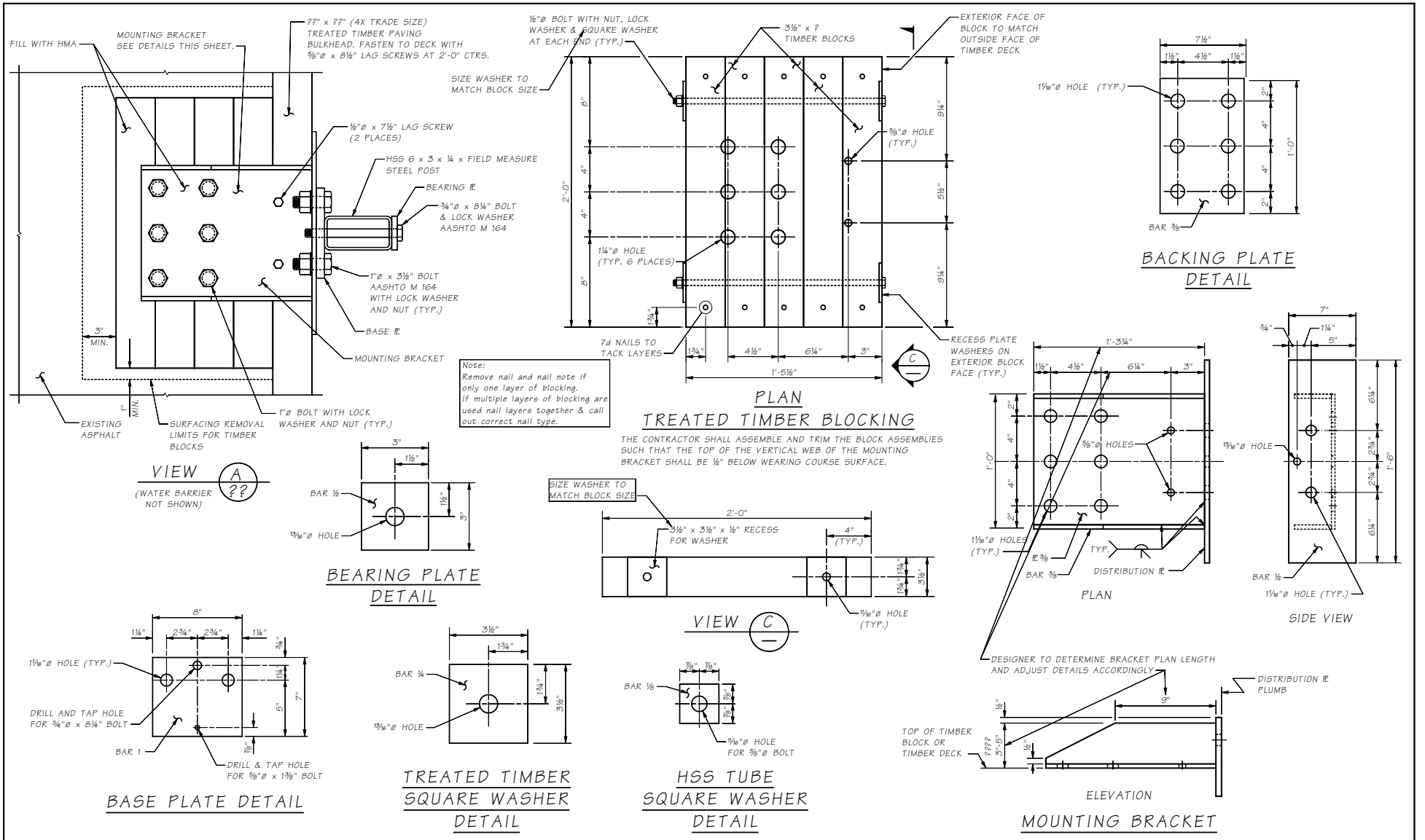

Bridge Design Engr.	M:\STANDARDS\Traffic Barriers\Rail Retrofit\TIMBER STANDARD NO 2.MAN				REGION NO.	STATE	FED. AID PROJ. NO.	SHEET NO.	TOTAL SHEETS
Supervisor					10	WASH.			
Designed By					JOB NUMBER				
Checked By									
Detailed By									
Bridge Projects Engr.									
Prelim. Plan By									
Architect/Specialist	DATE	REVISION	BY	APP'D					

Thu Sep 02 14:04:48 2010

BRIDGE AND STRUCTURES OFFICE

Washington State Department of Transportation

STANDARD RAIL RETROFITS

WP THRIE BEAM RETROFIT SL1 - DETAILS 2 OF 2

BRIDGE SHEET NO. 0

SHEET OF SHEETS

SR JOB NO. 10.4-A1-5 SHEET 0

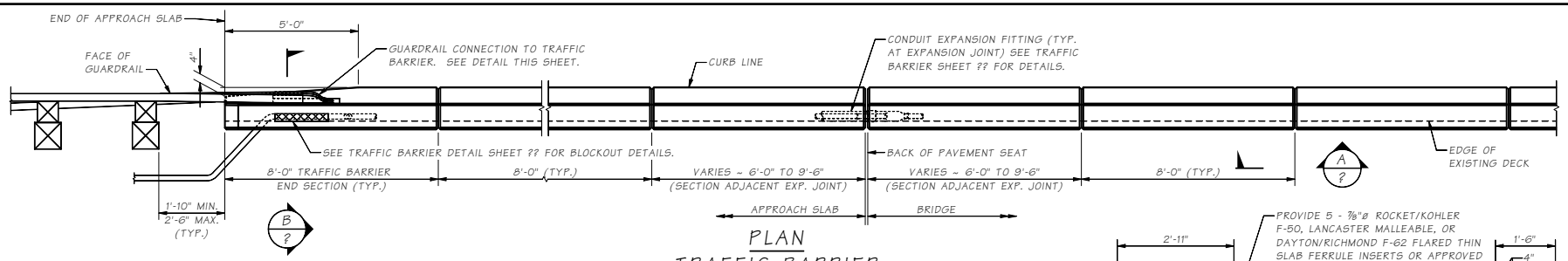

PLAN
TRAFFIC BARRIER

BARRIER CONTINUOUS BETWEEN ROADWAY EXPANSION JOINTS.
CONSTRUCTION JOINTS WITH SHEAR KEYS ARE PERMISSIBLE AT DUMMY JOINT LOCATIONS.
FORM JOINTS BETWEEN DUMMY JOINTS SHALL NOT BE PERMITTED.

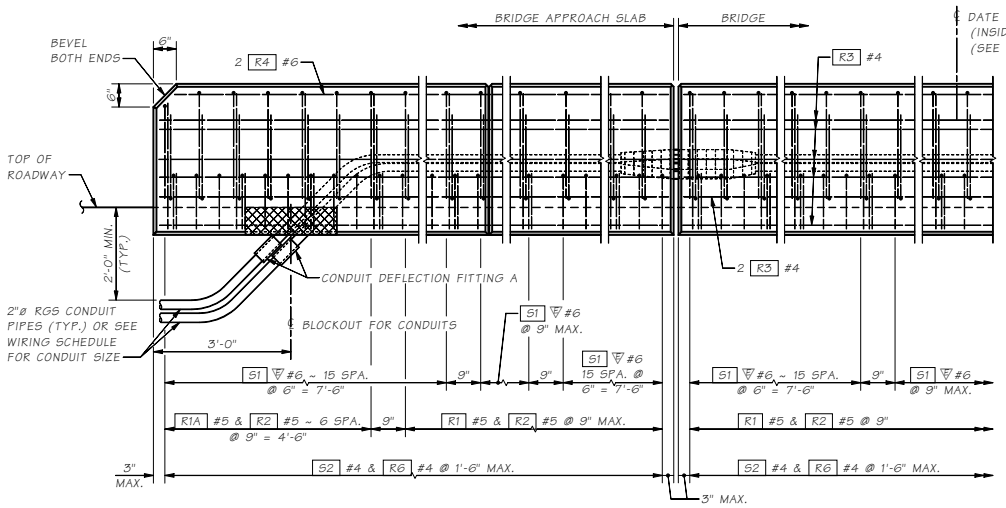

OUTSIDE ELEVATION
END OF TRAFFIC BARRIER

Note to designer:
Remove approach slab details if not used.

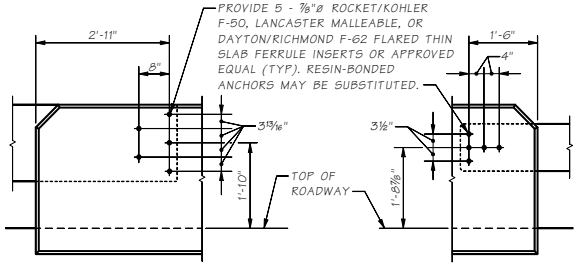

OUTSIDE ELEVATION
TRAFFIC BARRIER - GUARDRAIL CONNECTION

(WHERE SHOWN ON LAYOUT)

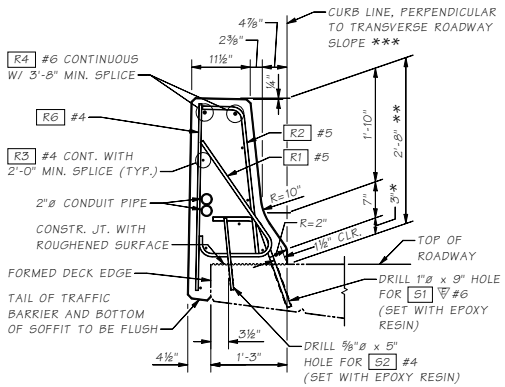

TYPICAL SECTION
TRAFFIC BARRIER

* TOE HEIGHT MAY VARY, 2" MIN. TO 6" MAX.

** HEIGHT MAY VARY IF REQUIRED TO PROVIDE A PROFILE PLEASING TO THE EYE

*** FOR TRANSVERSE ROADWAY SLOPES GREATER THAN 8%, CHANGE THE NOTE TO THE FOLLOWING:
FOR THE LOW SIDE OF THE BRIDGE OR MEDIAN BARRIER - "PERPENDICULAR TO 8% TRANSVERSE ROADWAY SLOPE"
FOR THE HIGH SIDE OF THE BRIDGE BARRIER - "PERPENDICULAR TO TRANSVERSE ROADWAY SLOPE"

NOTE TO DESIGNERS

1. If transverse roadway slope is greater than 8%, S1 and S2 bar bends need to be modified to account for the difference between the actual slope and 8% on the low side only of the bridge or median barrier. The barrier geometry needs to be checked also.
2. The non-applicable text should be removed from the actual bridge plans.

NW REGION:

TERMINATE EACH CONDUIT PIPE AT SEPARATE TYPE 1 JUNCTION BOXES OFF END OF BRIDGE AS SHOWN ON LAYOUT.

Bridge Design Engr.	M:\STANDARDS\Traffic Barriers\Rehab\TBI-R.man									
Supervisor					REGION NO.	STATE	FED. AID PROJ. NO.		SHEET NO.	TOTAL SHEETS
Designed By					10	WASH.				
Checked By					JOB NUMBER					
Detailed By										
Bridge Projects Engr.										
Prelim. Plan By										
Architect/Specialist	DATE	REVISION	BY	APPD						

BRIDGE AND STRUCTURES OFFICE

Washington State Department of Transportation

STANDARD TRAFFIC BARRIERS

TRAFFIC BARRIER - SHAPE F REHABILITATION - DETAILS 1 OF 3

BRIDGE SHEET NO. | SHEET | OF | SHEETS

Last revised on : 06/23/2010

SR JOB NO. 10.4-A2-1

Thu Sep 02 14:04:50 2010

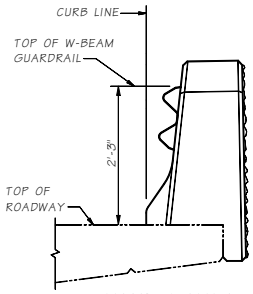

END VIEW

W-BEAM SHOWN WITH "D" CONNECTION

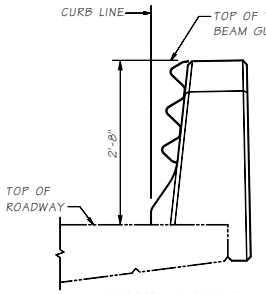

END VIEW

THRIE BEAM SHOWN WITH "D" CONNECTION

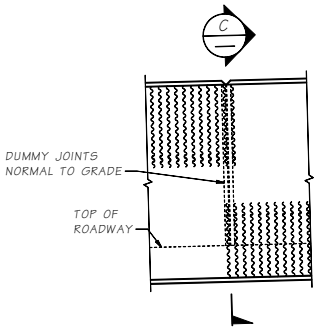

VIEW A ?

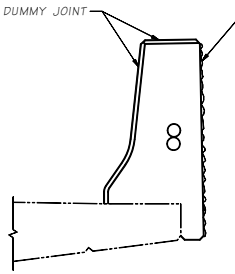

SECTION C —

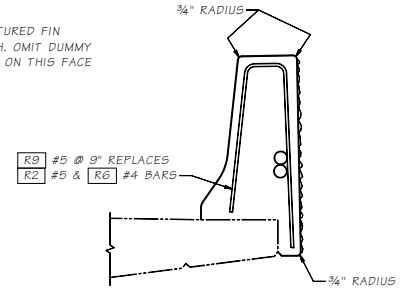

SLIPFORM ALTERNATE

SEE "TYPICAL SECTION - TRAFFIC BARRIER" FOR ADDITIONAL DETAILS

THE CONTRACTOR IS ADVISED THAT THE SLIPFORM CONSTRUCTION METHOD IS A PATENTED PROPRIETARY PROCESS FOR BARRIERS WITH A FRACTURED FIN FINISH.

JUNCTION BOX LOCATIONS

STATION	OFFSET	"TS" OR "LT"

TS = TRAFFIC SYSTEM
LT = LIGHTING SYSTEM

JUNCTION BOX LOCATIONS SHOWN ARE APPROXIMATE. CENTER JUNCTION BOX INSTALLATION BETWEEN BARRIER DUMMY JOINTS.

INSTALL ALL CONDUIT RUNS TO DRAIN TO A BRIDGE END OR PROVIDE DRAIN AT ALL LOW POINTS IN CONDUIT RUN ON BRIDGE.

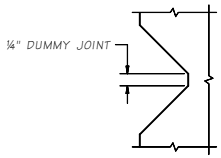

DUMMY JOINT DETAIL

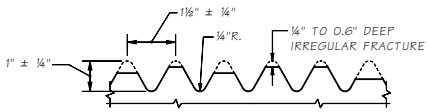

FRACTURED FIN FINISH

BENDING DIAGRAM

ALL DIMENSIONS ARE OUT TO OUT.

≠ = DIMENSIONS TO POINTS OF INTERSECTION.

FOR W1 & W2 BARS SEE WINGWALL OR RETAINING WALL PLANS.

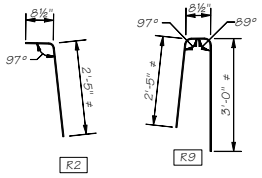

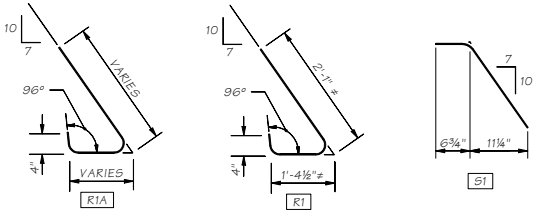

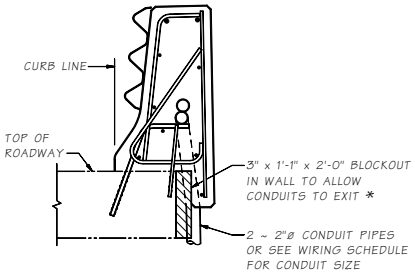

SECTION B ? APPROACH SLAB

FOR DETAILS NOT SHOWN SEE "OUTSIDE ELEVATION" AND "TYPICAL SECTION - TRAFFIC BARRIER"

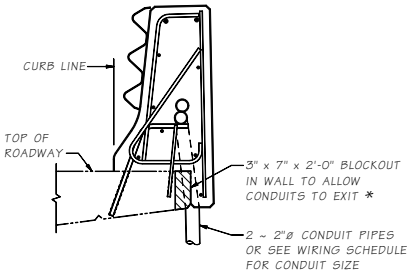

SECTION B ? BRIDGE

FOR DETAILS NOT SHOWN SEE "OUTSIDE ELEVATION" AND "TYPICAL SECTION - TRAFFIC BARRIER"

* BLOCKOUT WIDTH MAY BE INCREASED TO 6" TO ALLOW CONDUITS OF A LARGER DIAMETER THAN 2" TO EXIT BARRIER OR WALL WITHOUT REBAR STEEL CONFLICT.

Bridge Design Engr.	M:\STANDARDS\Traffic Barriers\Rehab\TB2-R.man				REGION NO.	STATE	FED. AID PROJ. NO.	SHEET NO.	TOTAL SHEETS
Supervisor					10	WASH.			
Designed By					JOB NUMBER				
Checked By									
Detailed By									
Bridge Projects Engr.									
Prelim. Plan By									
Architect/Specialist	DATE	REVISION	BY	APP'D					

BRIDGE AND STRUCTURES OFFICE

Washington State Department of Transportation

STANDARD TRAFFIC BARRIERS

TRAFFIC BARRIER - SHAPE F REHABILITATION - DETAILS 2 OF 3

BRIDGE SHEET NO. | SHEET | OF | SHEETS

SR JOB NO. SHEET

10.4-A2-2

Thu Sep 02 14:04:54 2010

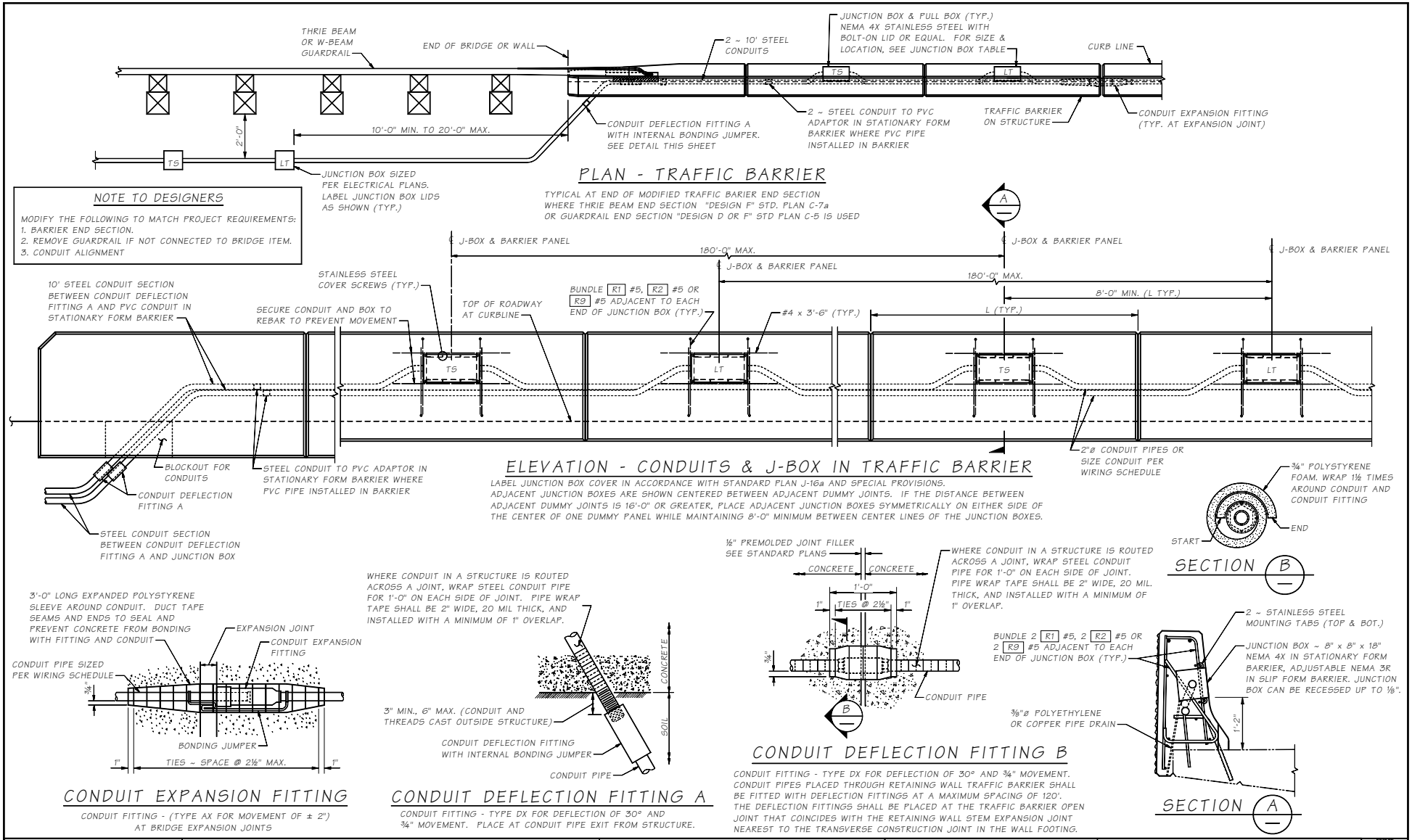

Bridge Design Engr.	M:\STANDARDS\Traffic Barriers\Rehab\TB3-R.man				REGION NO.	STATE	FED. AID PROJ. NO.	SHEET NO.	TOTAL SHEETS
Supervisor					10	WASH.			
Designed By					JOB NUMBER				
Checked By									
Detailed By									
Bridge Projects Engr.									
Prelim. Plan By									
Architect/Specialist	DATE	REVISION	BY	APPD					

BRIDGE AND STRUCTURES OFFICE

Washington State Department of Transportation

STANDARD TRAFFIC BARRIERS

TRAFFIC BARRIER - SHAPE F REHABILITATION - DETAILS 3 OF 3

BRIDGE SHEET NO. SHEET OF SHEETS

SR NO. JOB NO. SHEET

10.4-A2-3

Thu Sep 02 14:04:57 2010

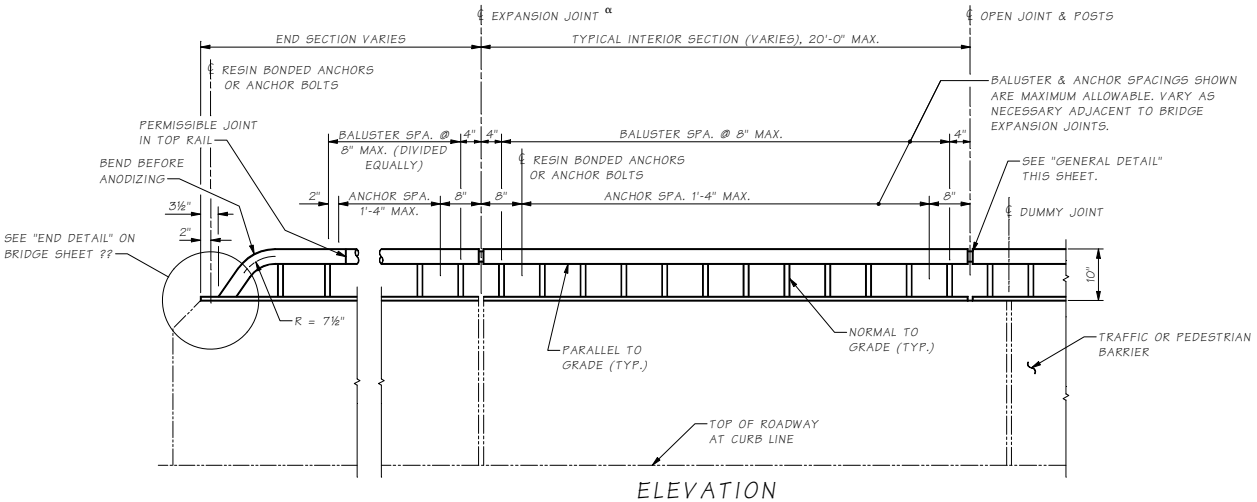

ELEVATION

BALUSTER AND GUARDRAIL SECTION ATTACHMENT DETAILS NOT SHOWN.

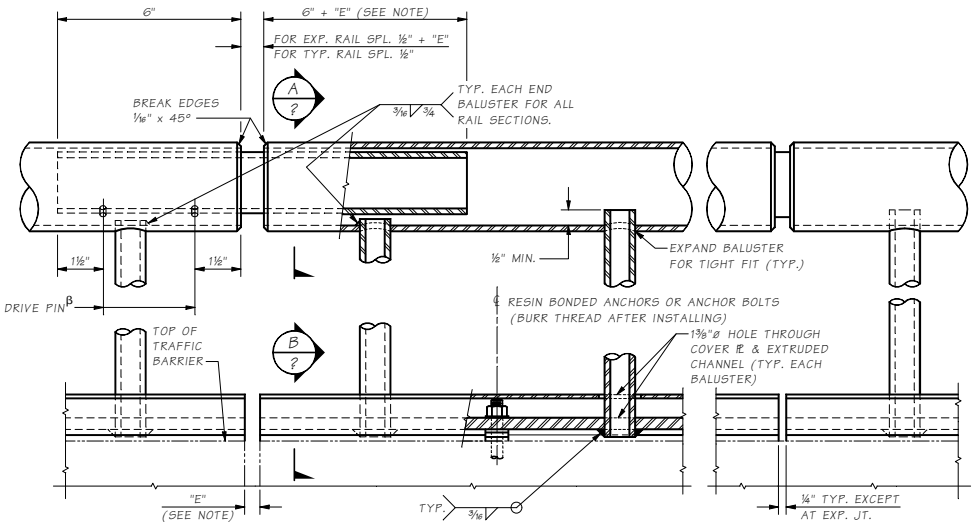

GENERAL DETAIL

NOTES

1. PIPE RAILING, PIPE RAILING SPLICES, COVER PLATES AND BOTTOM EXTRUDED CHANNELS SHALL BE BENT TO THE HORIZONTAL CURVE WHERE THE RADIUS OF CURVATURE IS LESS THAN 200'. THESE ITEMS MAY BE HEATED TO NOT MORE THAN 400°F FOR A PERIOD NOT TO EXCEED 30 MINUTES TO FACILITATE FORMING OR BENDING TO HORIZONTAL CURVATURE.
2. SHOP DRAWINGS OF RAILING SHALL BE SUBMITTED FOR APPROVAL SHOWING COMPLETE DIMENSIONS AND DETAILS OF FABRICATION AND INCLUDING AN ERECTION DIAGRAM. MATERIAL SPECIFICATIONS SHALL BE PROVIDED IN THE SHOP DRAWINGS FOR ALL COMPONENTS.
3. CUTTING SHALL BE DONE BY SAWING OR MILLING AND ALL CUTS SHALL BE TRUE AND SMOOTH. FLAME CUTTING WILL NOT BE PERMITTED.
4. WELDING OF ALUMINUM SHALL CONFORM TO STD. SPEC. SECTION 9-28.14(3).
5. ALL ALUMINUM PARTS SHALL BE GIVEN A *[CLEAR OR BRONZE] ANODIC COATING OF AT LEAST 0.0006" THICK AND SEALED TO MEET THE REQUIREMENTS OF ASTM B 580 WITH A UNIFORM FINISH.
6. PIPE RAILING, PIPE BALUSTERS AND PIPE RAILING SPLICES SHALL BE ADEQUATELY WRAPPED TO INSURE SURFACE PROTECTION DURING HANDLING AND TRANSPORTATION TO THE JOB SITE.

* NOTE TO DESIGNER:
Designer to choose color for their project in consultation with the Bridge Architect.

α PROVIDE EXPANSION RAIL SPLICE AT TRAFFIC BARRIER EXPANSION JOINTS. RAIL SPLICE JOINTS ARE NO REQUIRED AT TRAFFIC BARRIER DUMMY JOINTS.

β LOCATE ON OPPOSITE SIDE OF TRAFFIC. DRIVE PINS SHALL BE DRIVEN FLUSH WITH THE OUTSIDE FACE OF THE RAILING.

NOTE:
"E" DIMENSION SHALL BE EQUAL TO OPENING OF TRAFFIC BARRIER EXPANSION JOINTS.

Bridge Design Engr.	M:\STANDARDS\BP Rails\Ped_Rail1.MAN				REGION NO.	STATE	FED. AID PROJ. NO.	SHEET NO.	TOTAL SHEETS	BRIDGE AND STRUCTURES OFFICE
Supervisor					10	WASH.				Washington State Department of Transportation
Designed By					JOB NUMBER					STANDARD RAILINGS
Checked By										BRIDGE RAILING TYPE PEDESTRIAN DETAILS 1 OF 2
Detailed By										BRIDGE SHEET NO.
Bridge Projects Engr.										SHEET OF SHEETS
Prelim. Plan By										
Architect/Specialist	DATE	REVISION	BY	APP'D						

Last revised on : 08/26/2010

SR ____ SHEET ____ JOB NO. 10.5-A1-1

Thu Sep 02 07:40:09 2010

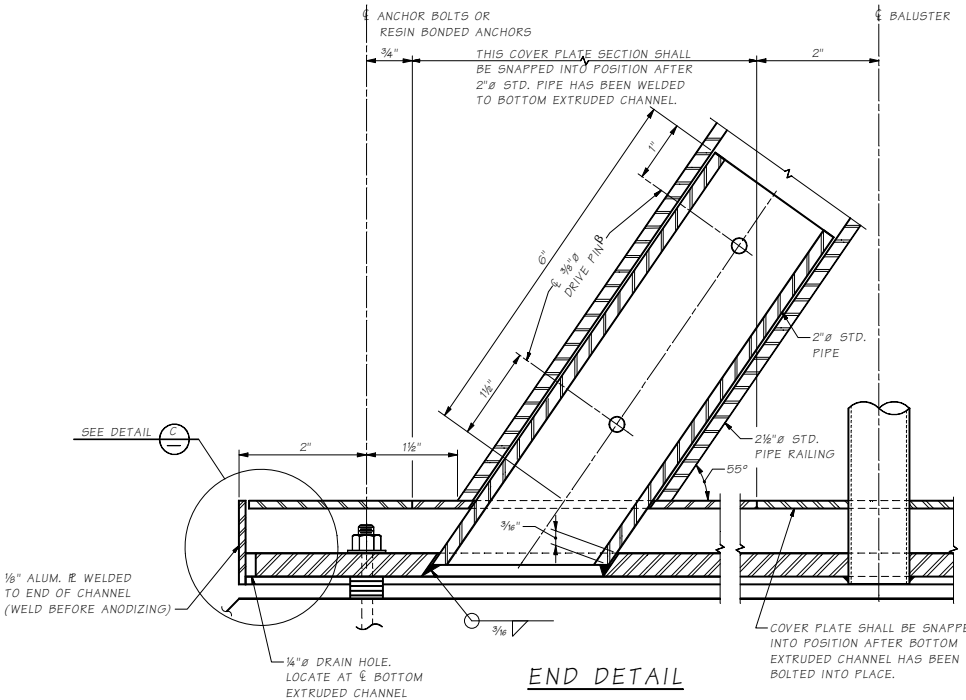

END DETAIL

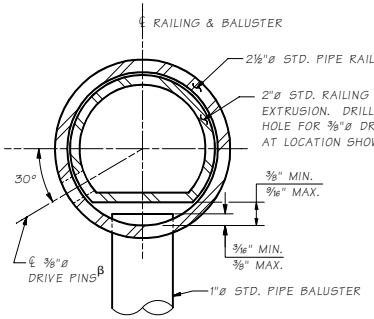

SECTION A — OPTION #1

β LOCATE ON OPPOSITE SIDE OF TRAFFIC. DRIVE PINS SHALL BE DRIVEN FLUSH WITH THE OUTSIDE FACE OF THE RAILING.

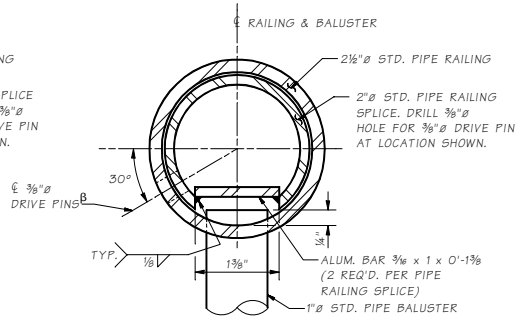

SECTION A — OPTION #2

β LOCATE ON OPPOSITE SIDE OF TRAFFIC. DRIVE PINS SHALL BE DRIVEN FLUSH WITH THE OUTSIDE FACE OF THE RAILING.

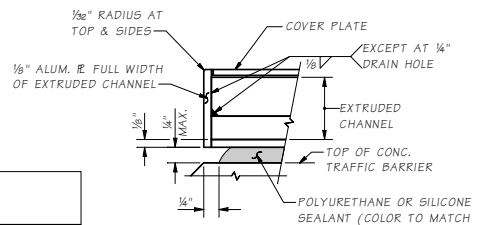

DETAIL C

DRAIN HOLES NOT SHOWN

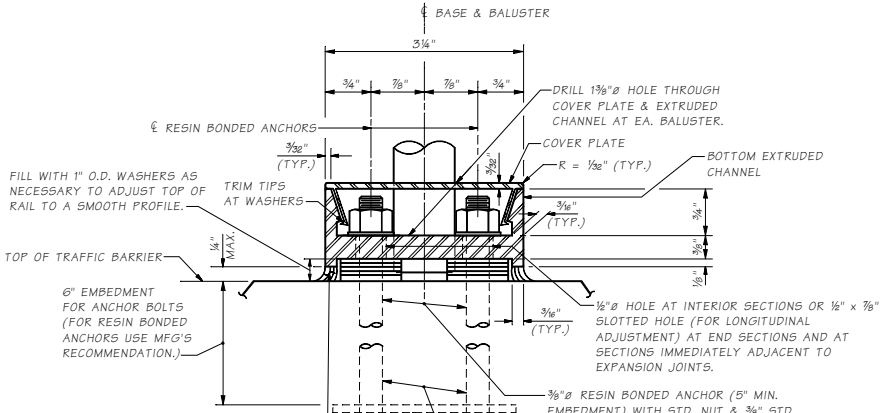

SECTION B

ANCHOR BOLTS SHALL BE POSITIONED IN A JIG DURING WELDING.

MAT'L	PART	MATERIAL SPECIFICATION
ALUMINUM	PIPES	ASTM B 221- 6005-T5 OR 6005A-T5 ASTM B 241 OR B 429 6061-T6
	EXTRUDED CHANNELS, COVER PLATES & BAR	ASTM B 221- 6005-T5
STEEL	ANCHOR BOLTS, NUTS & WASHERS	STANDARD SPECIFICATION SECTION 9-06.5(4) (GALVANIZE IN ACCORDANCE WITH AASHTO SPECIFICATION M 232)
	STRIP	ASTM A 36
	DRIVE PINS	ASTM A 276 TYPE 302 STAINLESS STEEL

Bridge Design Engr.	M:\STANDARDS\BP Rails\Ped_Rail2.MAN					REGION NO.	STATE	FED. AID PROJ. NO.	SHEET NO.	TOTAL SHEETS
Supervisor						10	WASH.			
Designed By						JOB NUMBER				
Checked By										
Detailed By										
Bridge Projects Engr.										
Prelim. Plan By										
Architect/Specialist	DATE	REVISION		BY	APPD					

BRIDGE AND STRUCTURES OFFICE

Washington State Department of Transportation

STANDARD RAILINGS

BRIDGE RAILING TYPE PEDESTRIAN DETAILS 2 OF 2

BRIDGE SHEET NO.

SHEET OF SHEETS

SR JOB NO. 10.5-A1-2

Thu Sep 02 07:40:14 2010

Last revised on : 08/26/2010

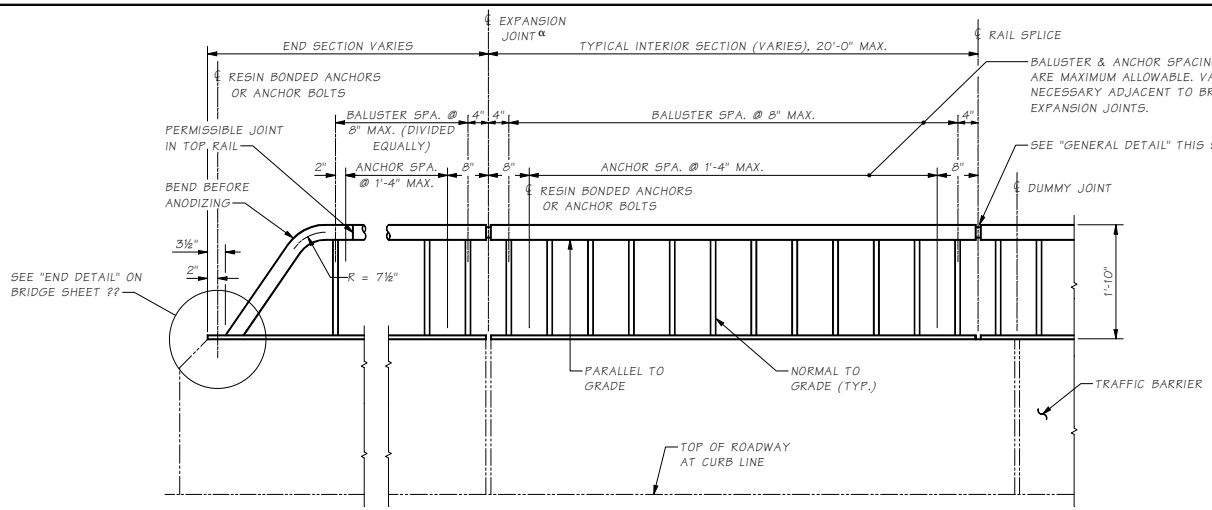

ELEVATION

BALUSTER AND GUARDRAIL SECTION ATTACHMENT DETAILS NOT SHOWN.

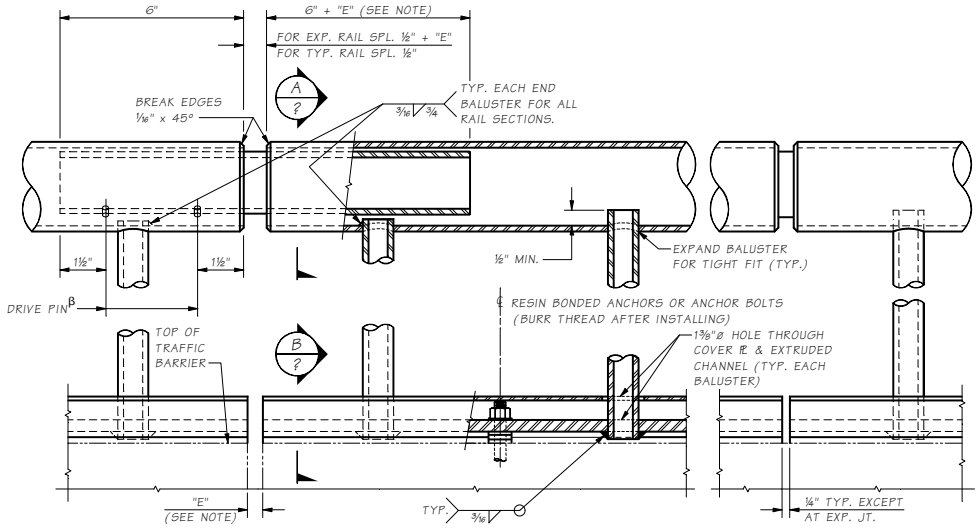

GENERAL DETAIL

NOTES

1. PIPE RAILING, PIPE RAILING SPLICES, COVER PLATES AND BOTTOM EXTRUDED CHANNELS SHALL BE BENT TO THE HORIZONTAL CURVE WHERE THE RADIUS OF CURVATURE IS LESS THAN 200'. THESE ITEMS MAY BE HEATED TO NOT MORE THAN 400°F FOR A PERIOD NOT TO EXCEED 30 MINUTES TO FACILITATE FORMING OR BENDING TO HORIZONTAL CURVATURE.
2. SHOP DRAWINGS OF RAILING SHALL BE SUBMITTED FOR APPROVAL SHOWING COMPLETE DIMENSIONS AND DETAILS OF FABRICATION AND INCLUDING AN ERECTION DIAGRAM. MATERIAL SPECIFICATIONS SHALL BE PROVIDED IN THE SHOP DRAWINGS FOR ALL COMPONENTS.
3. CUTTING SHALL BE DONE BY SAWING OR MILLING AND ALL CUTS SHALL BE TRUE AND SMOOTH. FLAME CUTTING WILL NOT BE PERMITTED.
4. WELDING OF ALUMINUM SHALL CONFORM TO STD. SPEC. SECTION 9-28.14(3).
5. ALL ALUMINUM PARTS SHALL BE GIVEN A *[CLEAR OR BRONZE] ANODIC COATING OF AT LEAST 0.0006" THICK AND SEALED TO MEET THE REQUIREMENTS OF ASTM B 580 WITH A UNIFORM FINISH.
6. PIPE RAILING, PIPE BALUSTERS AND PIPE RAILING SPLICES SHALL BE ADEQUATELY WRAPPED TO INSURE SURFACE PROTECTION DURING HANDLING AND TRANSPORTATION TO THE JOB SITE.

* NOTE TO DESIGNER:
Designer to choose color for their project in consultation with the Bridge Architect.

α PROVIDE EXPANSION RAIL SPLICE AT TRAFFIC BARRIER EXPANSION JOINTS. RAIL SPLICE JOINTS ARE NO REQUIRED AT TRAFFIC BARRIER DUMMY JOINTS.

β LOCATE ON OPPOSITE SIDE OF TRAFFIC. DRIVE PINS SHALL BE DRIVEN FLUSH WITH THE OUTSIDE FACE OF THE RAILING.

NOTE:
"E" DIMENSION SHALL BE EQUAL TO OPENING OF TRAFFIC BARRIER EXPANSION JOINTS.

Bridge Design Engr.	M:\STANDARDS\BP Rails\BP1.man				REGION NO.	STATE	FED. AID PROJ. NO.	SHEET NO.	TOTAL SHEETS
Supervisor					10	WASH.			
Designed By					JOB NUMBER				
Checked By									
Detailed By									
Bridge Projects Engr.									
Prelim Plan By									
Architect/Specialist	DATE	REVISION	BY	APPD					

BRIDGE AND STRUCTURES OFFICE

Washington State Department of Transportation

STANDARD RAILINGS

BRIDGE RAILING TYPE BP
DETAILS 1 OF 2

BRIDGE SHEET NO. SHEET OF SHEETS

Last revised on : 08/26/2010

SR ____ SHEET ____ JOB NO. 10.5-A2-1

Thu Sep 02 07:40:24 2010

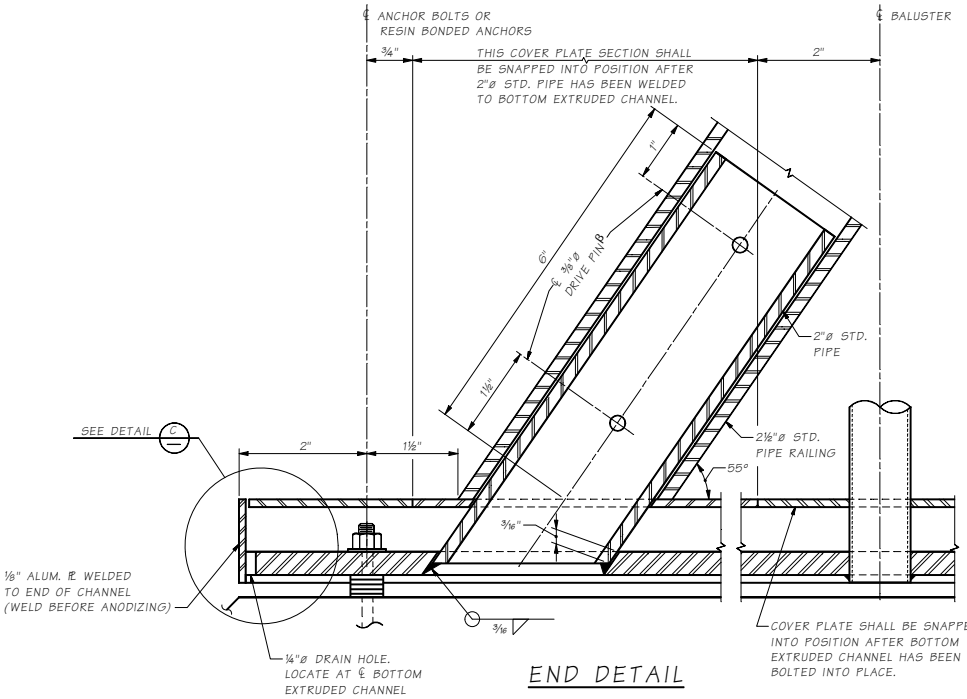

END DETAIL

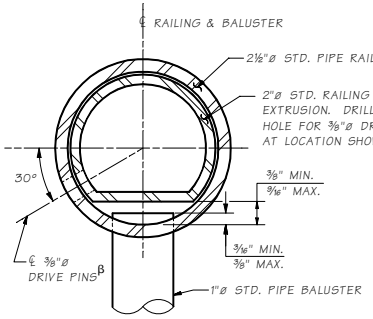

SECTION A — OPTION #1

β LOCATE ON OPPOSITE SIDE OF TRAFFIC. DRIVE PINS SHALL BE DRIVEN FLUSH WITH THE OUTSIDE FACE OF THE RAILING.

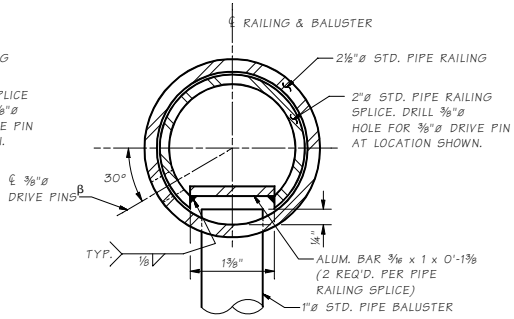

SECTION A — OPTION #2

β LOCATE ON OPPOSITE SIDE OF TRAFFIC. DRIVE PINS SHALL BE DRIVEN FLUSH WITH THE OUTSIDE FACE OF THE RAILING.

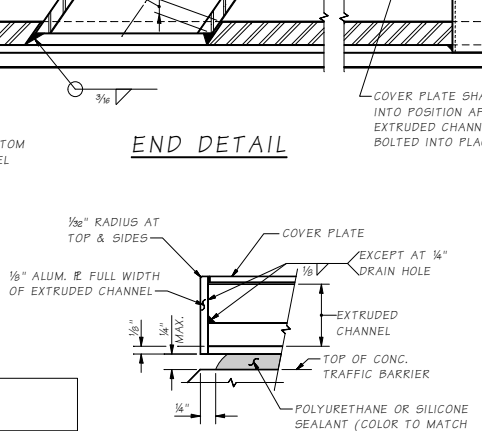

DETAIL C
DRAIN HOLES NOT SHOWN

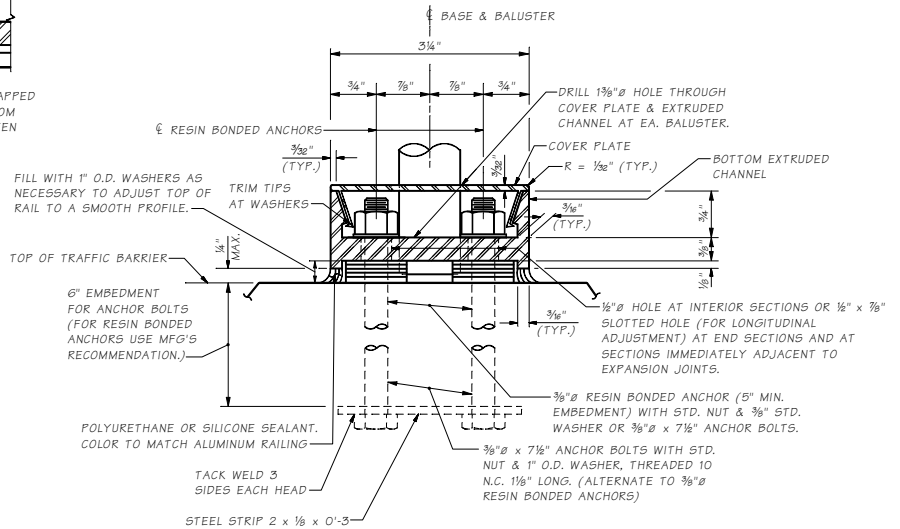

SECTION B

ANCHOR BOLTS SHALL BE POSITIONED IN A JIG DURING WELDING.

MAT'L	PART	MATERIAL SPECIFICATION
ALUMINUM	PIPES	ASTM B 221- 6005-T5 OR 6005A-T5 ASTM B 241 OR B 429 6061-T6
ALUMINUM	EXTRUDED CHANNELS, COVER PLATES & BAR	ASTM B 221- 6005-T5
STEEL	ANCHOR BOLTS, NUTS & WASHERS	STANDARD SPECIFICATION SECTION 9-06.5(4) (GALVANIZE IN ACCORDANCE WITH AASHTO SPECIFICATION M 232)
STEEL	STRIP	ASTM A 36
STEEL	DRIVE PINS	ASTM A 276 TYPE 302 STAINLESS STEEL

Bridge Design Engr.	M:\STANDARDS\BP Rails\BP2.man				REGION NO.	STATE	FED. AID PROJ. NO.	SHEET NO.	TOTAL SHEETS	BRIDGE DESIGN AND STRUCTURES OFFICE
Supervisor					10	WASH.				Washington State Department of Transportation
Designed By					JOB NUMBER					STANDARD RAILINGS
Checked By										BRIDGE RAILING TYPE BP DETAILS 2 OF 2
Detailed By										BRIDGE SHEET NO. / SHEET / OF / SHEETS
Bridge Projects Engr.										
Prelim. Plan By										
Architect/Specialist	DATE	REVISION	BY	APP'D						

SR JOB NO. SHEET 10.5-A2-2

Thu Sep 02 07:40:30 2010

Last revised on : 08/26/2010

MAT'L	PART	MATERIAL SPECIFICATION
STEEL	PIPES	ASTM A53 GRADE B SCHEDULE 40 (STD. PIPE). GALVANIZED IN ACCORDANCE WITH AASHTO M 111.
STEEL	WASHERS	ASTM A 193 GRADE B7 GALVANIZED IN ACCORDANCE WITH AASHTO M 232.
STEEL	PLATES/BAR CHANNELS	ASTM A 36 GALVANIZED IN ACCORDANCE WITH AASHTO M 111
STEEL	DRIVE PINS	ASTM A 276 TYPE 302 STAINLESS STEEL
STEEL	ANCHOR BOLTS	ASTM F 593 TYPE 302 STAINLESS STEEL
	NUTS	TAMPER-PROOF TYPE OF EITHER CLEAR ANODIZED ALUMINUM OR ZINC ALLOY

NOTES

1. PIPE RAILING, PIPE RAILING SPLICES, AND CHANNELS SHALL BE BENT TO THE HORIZONTAL CURVE WHERE THE RADIUS OF CURVATURE IS LESS THAN 200 FEET.
2. SHOP DRAWINGS OF RAILING SHALL BE SUBMITTED FOR APPROVAL SHOWING COMPLETE DIMENSIONS AND DETAILS OF FABRICATION, GALVANIZING AND INCLUDING AN ERECTION DIAGRAM. MATERIAL BEING USED SHALL BE SPECIFIED IN THE SHOP DRAWINGS.
3. THE BRIDGE RAILING SHALL BE HOT DIP GALVANIZED AFTER FABRICATION PER AASHTO M 111. ALL COMPONENTS OF RAIL PANEL, POSTS, AND SPLICE SLEEVES SHALL HAVE ALL SURFACES HOT DIP GALVANIZED PRIOR TO ASSEMBLY.
4. CUTTING SHALL BE DONE BY SAWING OR MILLING AND ALL CUTS SHALL BE TRUE AND SMOOTH.
5. PIPE RAILING, PIPE BALLUSTERS, RAILING SPLICE AND CHANNELS SHALL BE ADEQUATELY WRAPPED TO ENSURE SURFACE PROTECTION DURING HANDLING AND TRANSPORTATION TO THE JOB SITE.
6. WELDING SHALL BE DONE IN ACCORDANCE WITH AWS D1.1.
7. PIPE RAILING AND SPLICES MAY BE HEATED TO FACILITATE FORMING OR BENDING.
8. THE CONTRACTOR SHALL REPAIR ALL GALVANIZED STEEL SURFACES DAMAGED BY FIELD OPERATIONS, BY PAINTING THE DAMAGED AREAS WITH TWO COATS OF PAINT CONFORMING TO FORMULA A-9-73 AS SPECIFIED IN SECTION 9-08.2 OF THE WASHINGTON STATE STANDARD SPECIFICATIONS FOR ROAD, BRIDGE AND MUNICIPAL CONSTRUCTION.

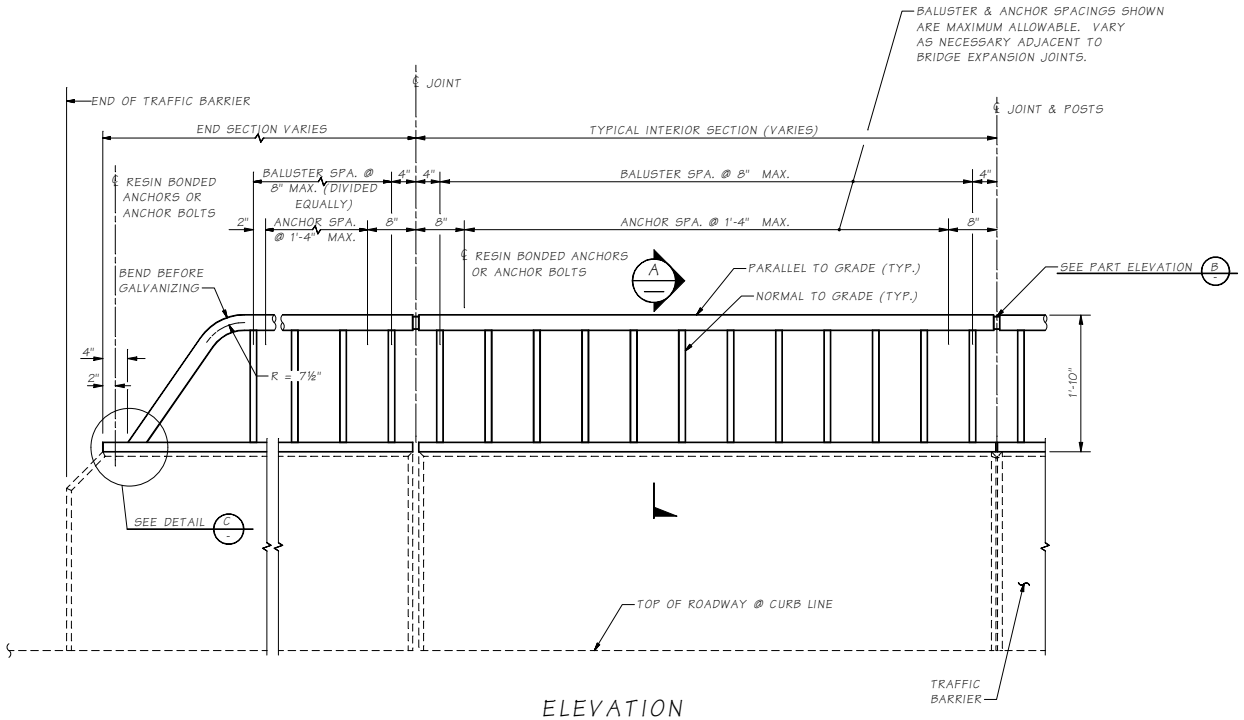

ELEVATION

BALUSTER ATTACHMENT DETAILS NOT SHOWN

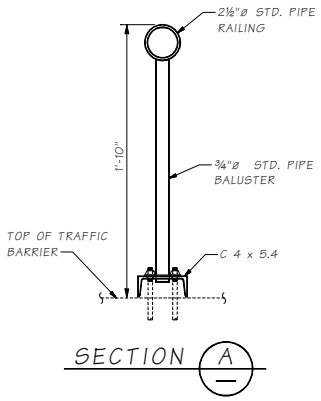

SECTION A

Bridge Design Engr.	M:\STANDARDS\BP Rails\STEEL RAILING BP-1.man				REGION NO.	STATE	FED. AID PROJ. NO.	SHEET NO.	TOTAL SHEETS
Supervisor					10	WASH			
Designed By					JOB NUMBER				
Checked By									
Detailed By									
Bridge Projects Engr.									
Prelim. Plan By									
Architect/Specialist	DATE	REVISION	BY	APPD					

BRIDGE AND STRUCTURES OFFICE

Washington State Department of Transportation

STANDARD RAILINGS

BRIDGE RAILING TYPE S-BP
DETAILS 1 OF 2

BRIDGE SHEET NO. SHEET OF SHEETS

SR JOB NO. 10.5-A3-1 SHEET 1

Thu Sep 02 07:39:56 2010

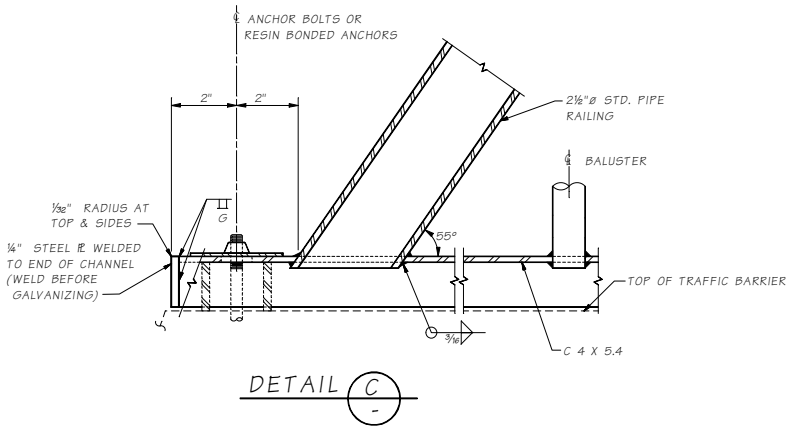

DETAIL C

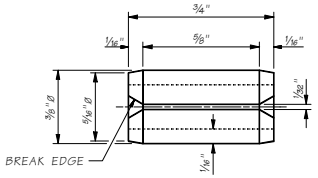

DRIVE PIN DETAIL
SLOTTED TYPE SPRING PIN (ANSI B18.8.2)

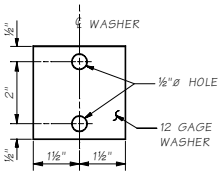

WASHER DETAIL
HOT DIP GALVANIZE AFTER FABRICATION

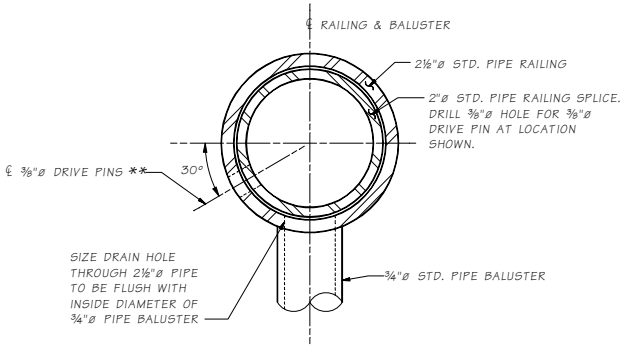

SECTION E

** LOCATE ON OPPOSITE SIDE OF TRAFFIC. DRIVE PINS SHALL BE DRIVEN FLUSH WITH THE OUTSIDE FACE OF THE RAILING

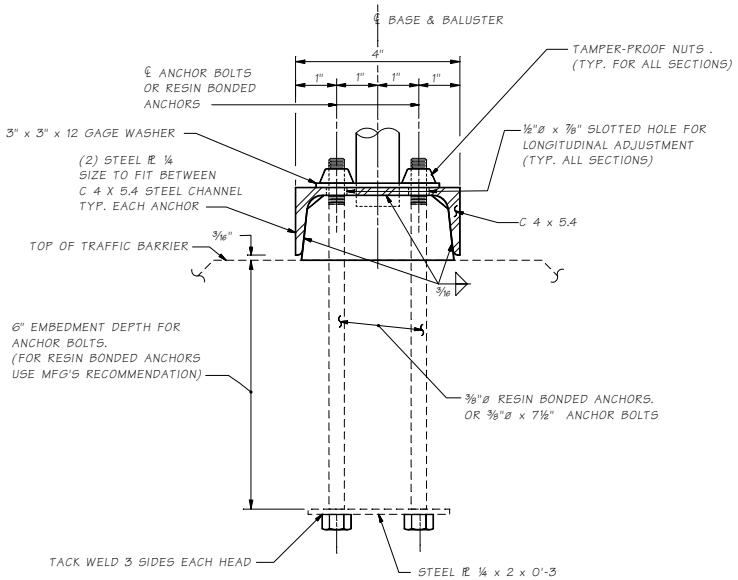

SECTION F
ANCHOR BOLTS SHALL BE POSITIONED IN A JIG DURING WELDING

NOTE:
"E" DIMENSION EQUALS MAX. OPENING OR CLOSING OF CONC. RAIL BASE AT EXPANSION JOINTS

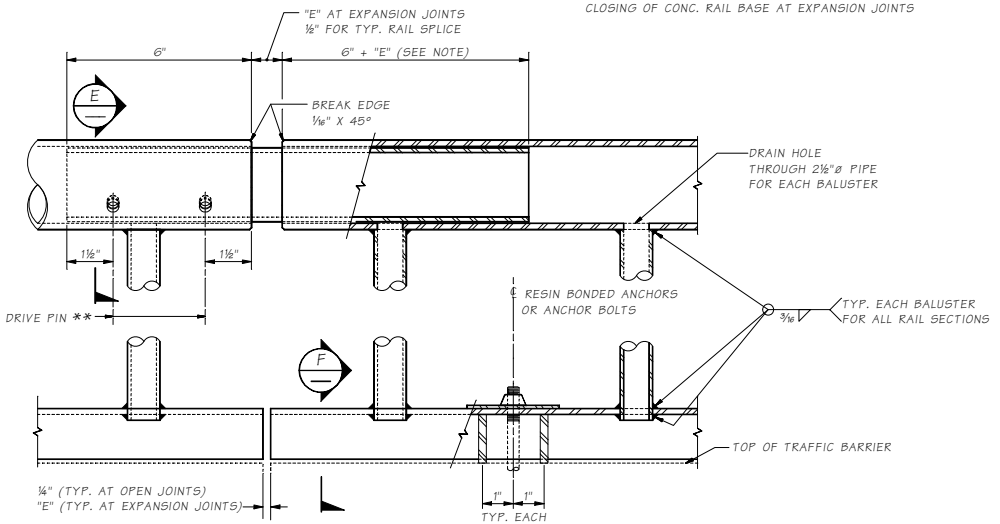

PART ELEVATION B

Bridge Design Engr. Charles C. Ruth	M:\STANDARDS\BP Rails\STEEL RAILING BP-2.man				REGION NO.	STATE	FED. AID PROJ. NO.	SHEET NO.	TOTAL SHEETS
Supervisor					10	WASH			
Designed By					JOB NUMBER				
Checked By									
Detailed By									
Bridge Projects Engr.									
Prelim. Plan By									
Architect/Specialist	DATE	REVISION	BY	APPD					

BRIDGE AND STRUCTURES OFFICE

Washington State Department of Transportation

STANDARD RAILINGS

BRIDGE RAILING TYPE S-BP DETAILS 2 OF 2

BRIDGE SHEET NO.
SHEET
OF
SHEETS

SR JOB NO. SHEET
10.5-A3-2

Thu Sep 02 07:40:00 2010

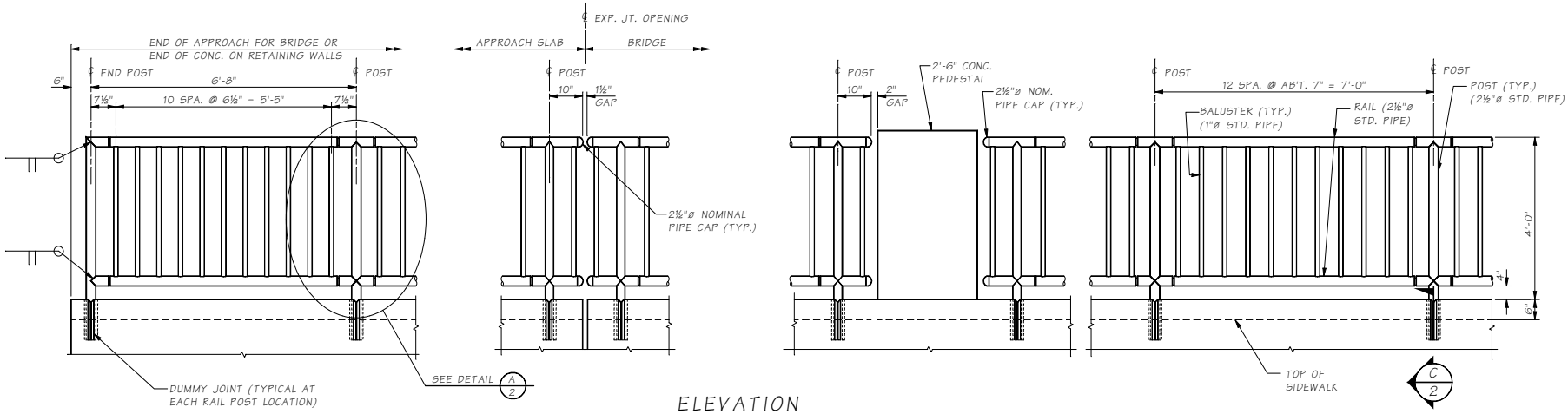

ELEVATION

BALUSTERS NORMAL TO GRADE.
TOP & BOTTOM RAILS PARALLEL TO GRADE.

NOTES

1. PIPE RAILING, AND PIPE RAILING SPLICES, SHALL BE BENT TO THE HORIZONTAL CURVE WHERE THE RADIUS OF CURVATURE IS LESS THAN 200 FEET.
2. SHOP DRAWINGS OF RAILING SHALL BE SUBMITTED FOR APPROVAL SHOWING COMPLETE DIMENSIONS AND DETAILS OF FABRICATION AND INCLUDING AN ERECTION DIAGRAM. MATERIAL BEING USED SHALL BE SPECIFIED IN THE SHOP DRAWINGS.
3. PIPE RAILING, AND PIPE RAILING SPLICES, MAY BE HEATED TO NOT MORE THAN 400°F FOR A PERIOD NOT TO EXCEED 30 MINUTES TO FACILITATE FORMING OR BENDING HORIZONTAL CURVATURE.
4. CUTTING SHALL BE DONE BY SAWING OR MILLING AND ALL CUTS SHALL BE TRUE AND SMOOTH. FLAME CUTTING WILL NOT BE PERMITTED.
5. WELDING OF ALUMINUM SHALL CONFORM TO STD. SPEC. SECTION 9-28.14(3).
6. AFTER FABRICATION, POSTS SHALL BE HEAT TREATED IN ACCORDANCE WITH SECTION 6.5 OF THE AASHTO STANDARD SPECIFICATIONS FOR STRUCTURAL SUPPORTS FOR HIGHWAY SIGNS, LUMINAIRES, AND TRAFFIC SIGNALS DATED 2001 AND INTEREMS THROUGH 2003.
7. ALL ALUMINUM PARTS SHALL BE GIVEN A (CLEAR OR BRONZE)* ANODIC COATING OF AT LEAST 0.0006 INCHES THICK AND SEALED TO MEET THE REQUIREMENTS OF ASTM B 580 WITH A UNIFORM FINISH.
8. PIPE RAILING, PIPE BALUSTERS, PIPE RAILING SPLICES, SHALL BE ADEQUATELY WRAPPED TO INSURE SURFACE PROTECTION DURING HANDLING AND TRANSPORTATION TO THE JOB SITE.

MAT'L	PART	MATERIAL SPECIFICATION
ALUMINUM	PIPES	ASTM B 221-6005-T5 SCHEDULE 40 (STD. PIPE) ASTM B 241 OR B 429 6061-T6
ALUMINUM	BAR	ASTM B 221-6005-T5
STEEL	DRIVE PINS	ASTM A 276 TYPE 302 STAINLESS STEEL

* NOTE TO DESIGNER:
Designer to choose color for their project in consultation with the Bridge Architect.

Bridge Design Engr.	M:\STANDARDS\BP Rails\4ftPedRail_Alumin 1.MAN				REGION NO.	STATE	FED. AID PROJ. NO.	SHEET NO.	TOTAL SHEETS	BRIDGE AND STRUCTURES OFFICE
Supervisor					10	WASH				Washington State Department of Transportation
Designed By					JOB NUMBER					STANDARD RAILINGS
Checked By										PEDESTRIAN RAILING DETAILS 1 OF 2
Detailed By										BRIDGE SHEET NO.
Bridge Projects Engr.										SHEET OF SHEETS
Prelim. Plan By										
Architect/Specialist	DATE	REVISION	BY	APPD						

SR JOB NO. SHEET
10.5-A4-1

Thu Sep 02 07:39:48 2010

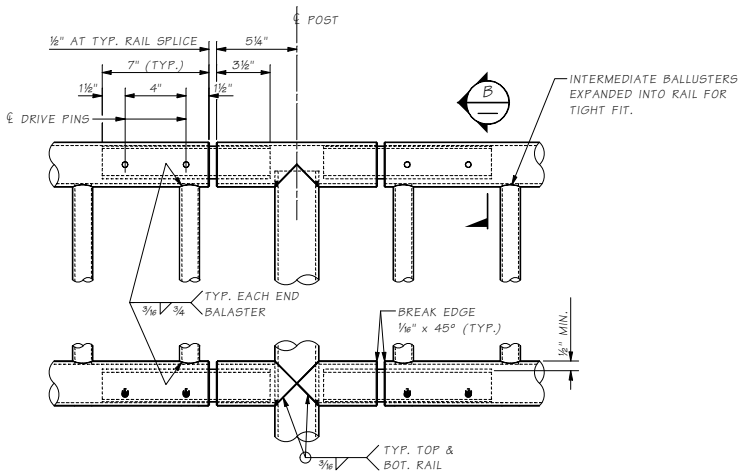

DETAIL A/1

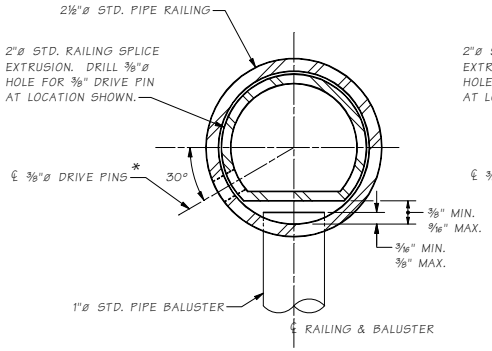

SECTION B
OPTION #1

* LOCATE ON OPPOSITE SIDE OF TRAFFIC. DRIVE PINS SHALL BE DRIVEN FLUSH WITH THE OUTSIDE FACE OF THE RAILING.

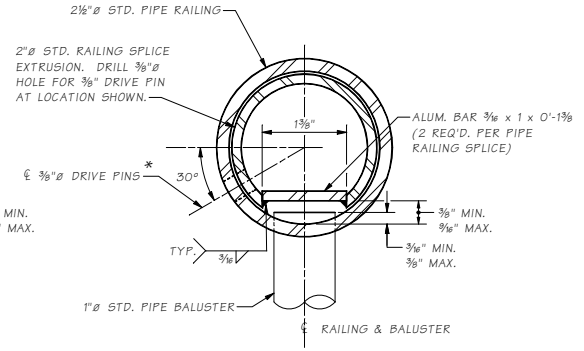

SECTION B
OPTION #2

* LOCATE ON OPPOSITE SIDE OF TRAFFIC. DRIVE PINS SHALL BE DRIVEN FLUSH WITH THE OUTSIDE FACE OF THE RAILING.

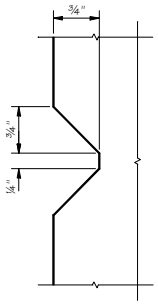

SECTION D

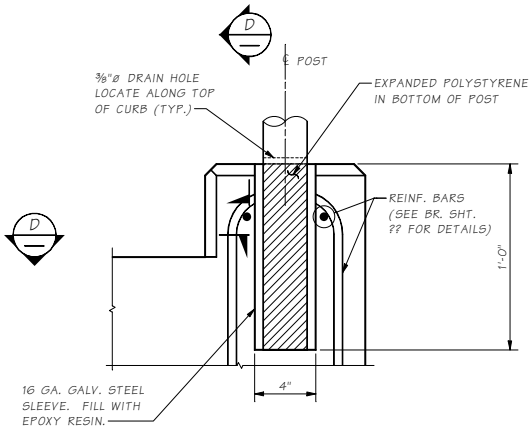

SECTION C

Bridge Design Engr.	M:\STANDARDS\BP Rails\4ftPedRail_Alumin 2.MAN				REGION NO.	STATE	FED. AID PROJ. NO.	SHEET NO.	TOTAL SHEETS
Supervisor					10	WASH.			
Designed By					JOB NUMBER				
Checked By									
Detailed By									
Bridge Projects Engr.									
Prelim. Plan By									
Architect/Specialist	DATE	REVISION	BY	APPD					

BRIDGE AND STRUCTURES OFFICE

Washington State Department of Transportation

STANDARD RAILINGS

PEDESTRIAN RAILING DETAILS 2 OF 2

BRIDGE SHEET NO.
SHEET OF SHEETS

SR JOB NO. SHEET

Thu Sep 02 07:39:52 2010

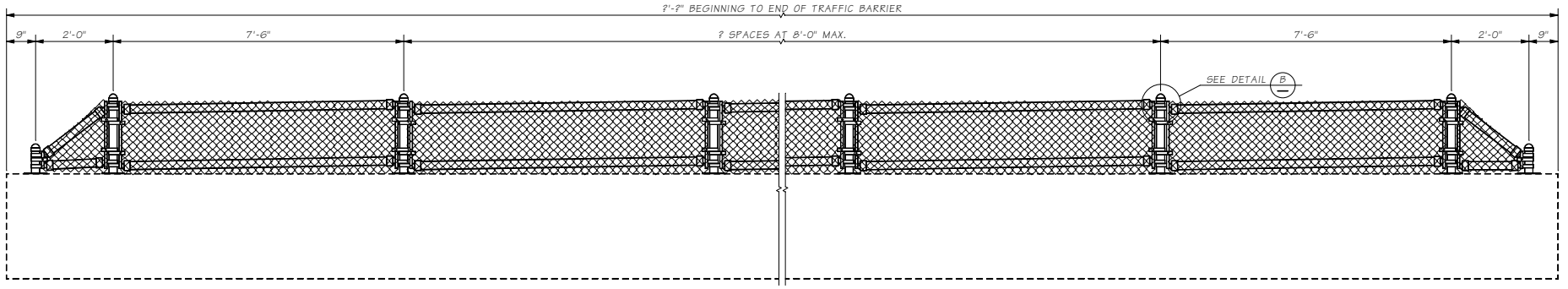

ELEVATION

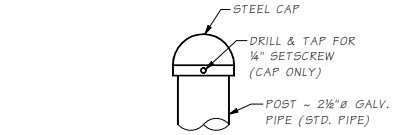

DETAIL A

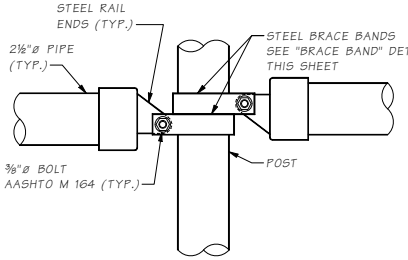

DETAIL B

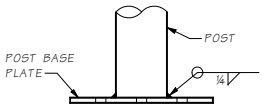

DETAIL C

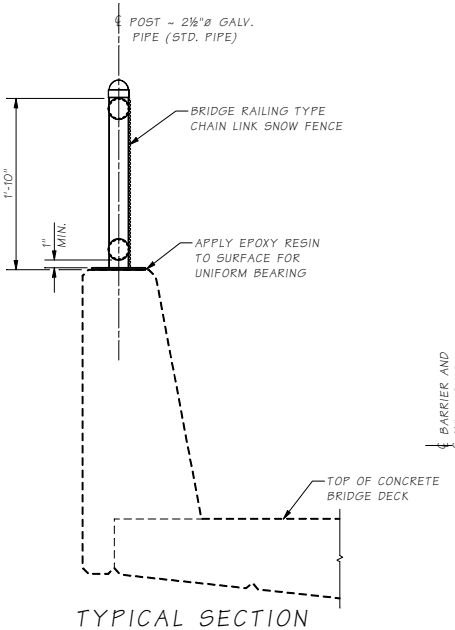

TYPICAL SECTION

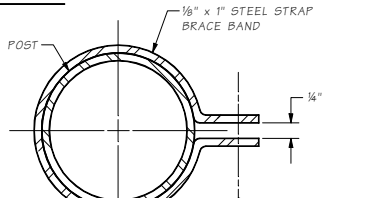

BRACE BAND

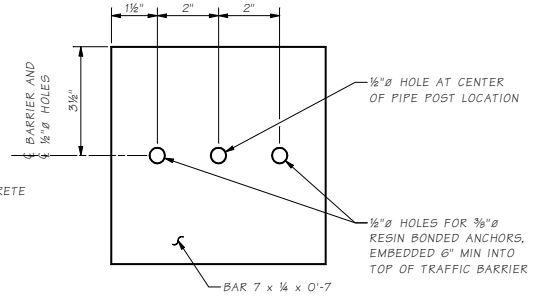

POST BASE PLATE

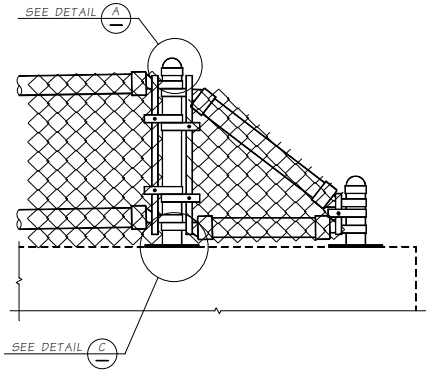

RAILING END VIEW

GENERAL NOTES

1. ALL ELEMENTS OF FENCE SHALL BE GALVANIZED AFTER FABRICATION AND COATED WITH UV INSENSITVE PLASTIC AS SPECIFIED IN THE SPECIAL PROVISIONS. STEEL PIPES FOR POSTS AND LONGITUDINAL MEMBERS SHALL CONFORM TO ASTM A53 GRADE B GALV.
2. CHAIN LINK FENCE SHALL CONFORM TO CLASS 1 REQUIREMENTS IN SECTION 9-16.1
3. FITTINGS, FABRIC BANDS, STRECHER BARS AND TIE WIRE SHALL CONFORM TO SECTION 9-16.1
4. FABRIC TIES SHALL BE INSTALLED TO ALL FRAMES IN ACCORDANCE WITH GOOD TRADE PRACTICES AT 1'-2" CENTERS MAXIMUM SPACING.
5. BOLTS, NUTS AND WASHERS SHALL CONFORM TO SECTION 9-06.5(1) AND GALVANIZED IN ACCORDANCE WITH AASHTO M 232.

Bridge Design Engr.	M:\STANDARDS\BP Rails\SNOW FENCE.MAN								
Supervisor									
Designed By									
Checked By									
Detailed By									
Bridge Projects Engr.									
Prelim. Plan By									
Architect/Specialist	DATE	REVISION	BY	APPD					

REGION NO.	STATE	FED. AID PROJ. NO.	SHEET NO.	TOTAL SHEETS
10	WASH.			
JOB NUMBER				

BRIDGE AND STRUCTURES OFFICE

Washington State Department of Transportation

STANDARD RAILINGS

BRIDGE RAILING TYPE CHAIN LINK SNOW FENCE

BRIDGE SHEET NO.

SHEET OF SHEETS

SR JOB NO. 10.5-A5-1 SHEET 1

Thu Sep 02 07:40:04 2010

PROTECTIVE SCREENING NOTES

ALL ELEMENTS OF FENCE SHALL BE HOT DIPPED GALVANIZED AFTER FABRICATION.

STEEL PIPES FOR POSTS AND LONGITUDINAL MEMBERS SHALL CONFORM TO ASTM SPECIFICATION A53 GRADE B GALV. PER AASHTO M 111.

ALL HARDWARE SHALL CONFORM TO AASHTO SPECIFICATION M 183 GALV. PER AASHTO M 111 & M232 UNLESS NOTED OTHERWISE.

FABRIC SHALL BE HEAVY DUTY ALUMINUM OF #9 GAGE WIRE WOVEN IN A 50 CHAIN LINK DIAMOND MESH.

FABRIC TIES SHALL BE INSTALLED TO ALL FRAMES IN ACCORDANCE WITH GOOD TRADE PRACTICES AT 355 CENTERS MAXIMUM SPACING.

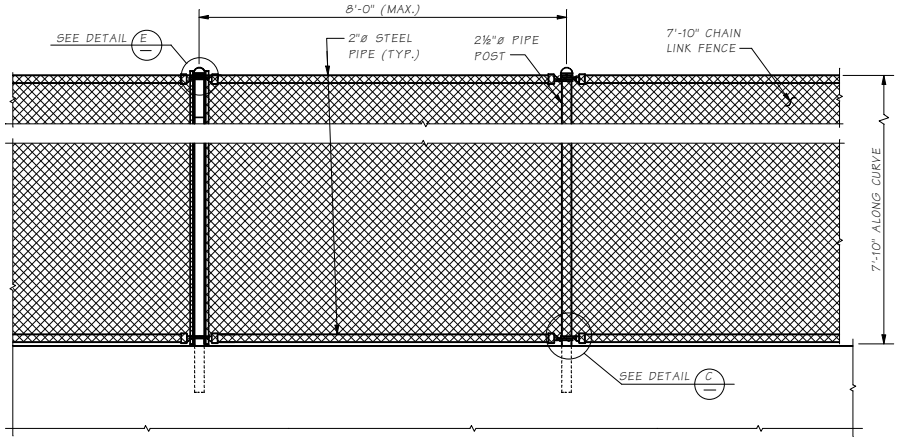

ELEVATION

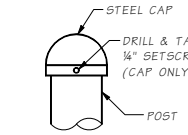

DETAIL E

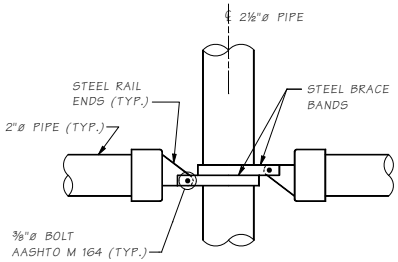

DETAIL C

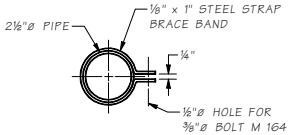

BRACE BAND

Please coordinate approval with the Bridge Architect before providing designs with this fence type.

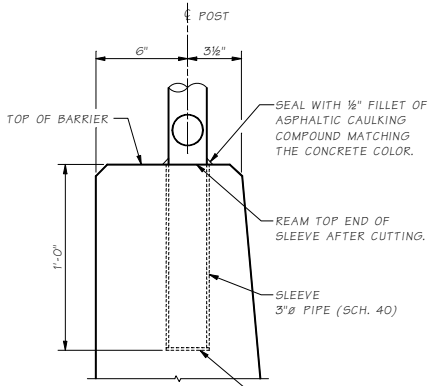

DETAIL B

NOTE: PLUG SLEEVE TO PREVENT INFILTRATION DURING CASTING OF CONRETE.

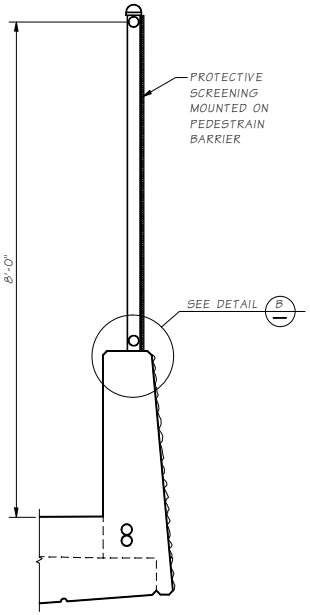

TYPICAL SECTION
PROTECTIVE SCREEN

Bridge Design Engr.	M:\STANDARDS\BP Rails\BRIDGE RAILING CHAIN LINK FENCE.MAN									
Supervisor										
Designed By										
Checked By										
Detailed By										
Bridge Projects Engr.										
Prelim. Plan By										
Architect/Specialist	DATE	REVISION		BY	APPD					

REGION NO.	STATE	FED. AID PROJ. NO.	SHEET NO.	TOTAL SHEETS
10	WASH.			
JOB NUMBER				

BRIDGE AND STRUCTURES OFFICE

Washington State Department of Transportation

STANDARD RAILINGS

BRIDGE RAILING
TYPE CHAIN LINK FENCE

BRIDGE SHEET NO. | SHEET | OF | SHEETS

SR | JOB NO. | SHEET

10.5-A5-2

Thu Sep 02 07:40:19 2010

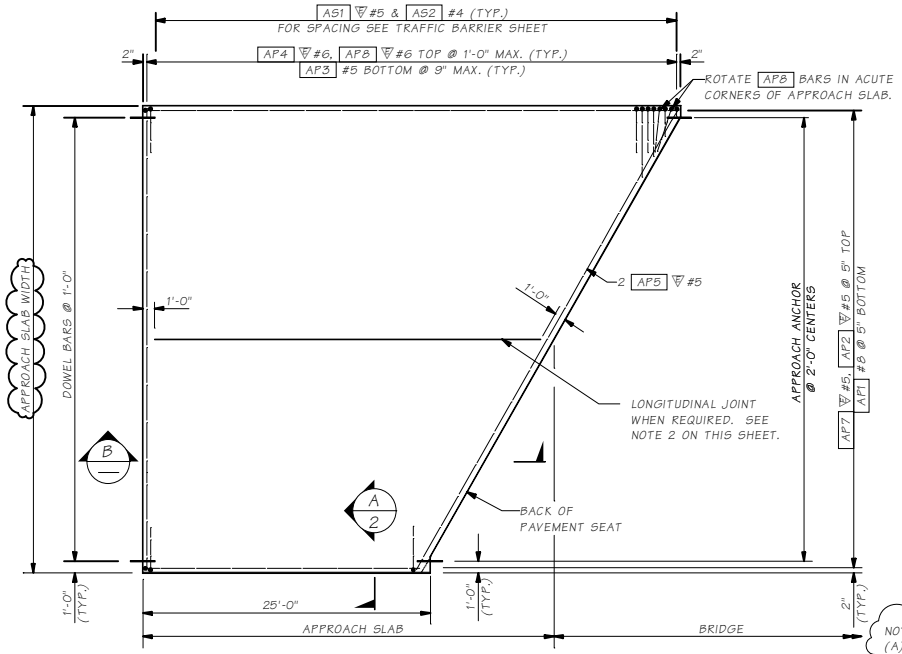

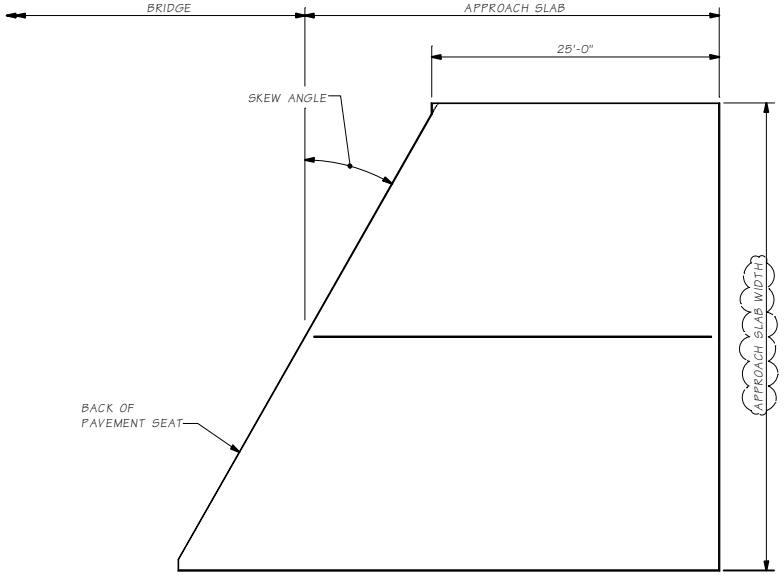

PLAN

NOTE:
(A) Bridge approach slabs less than 40' wide - no joint required.
(B) Bridge approach slabs wider than 40' - one or more joints are required to divide the slab into approximately 24' wide sections.

NOTE:
Designer to consult with Bridge Design Engineer for skews greater than 30 degrees .

NOTES:

1. ALL EDGES OF BRIDGE APPROACH SLAB SHALL HAVE ½" RADIUS.
2. LONGITUDINAL JOINTS SHALL BE PLACED ON LANE LINES AND SHALL BE CONSTRUCTED AND SEALED IN ACCORDANCE WITH STD. SPEC. SECTION 5-05.3(8). JOINTS MAY BE EITHER A SAWCUT CRACK CONTROL JOINT OR A CONSTRUCTION JOINT. SAWCUT JOINTS SHALL TERMINATE 1'-0" BEFORE REACHING EDGE OF SLAB AND MUST BE SAW CUT AS SOON AS POSSIBLE AFTER PLACEMENT OF CONCRETE.
3. THE MINIMUM LAP SPLICE OF #5 IS 2'-0", #5 IS 2'-6", #6 IS 3'-0", AND #8 IS 3'-3". ALL LAP SPLICES SHALL BE STAGGERED SO THAT NO MORE THAN 50% OF REBAR IS SPLICED AT THE SAME LOCATION. LAP SPLICES SHALL BE LOCATED WITHIN THE MIDDLE HALF OF THE BRIDGE APPROACH SLAB. OPTIONAL SPLICES ARE ALLOWED FOR AP4 #6.

NOTE:
Designer to remove call outs that are not applicable in note 3.

NOTE:
AP9 bars are only applicable in L abutments or approach retrofits. Remove when not used.

NOTE:
Designer to remove AP8, AS1, and AS2 bars when there is no traffic barrier. For 42" barriers designed for 124k impact load (TL-5 Loading) designer shall compute additional reinforcement required.

BENDING DIAGRAM

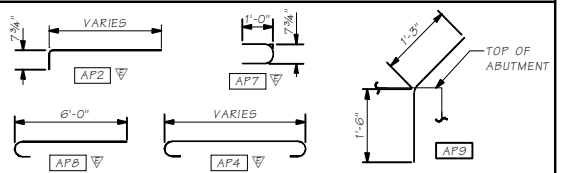

= EPOXY COATED REINFORCING STEEL NOTE: ALL DIMENSIONS ARE OUT TO OUT

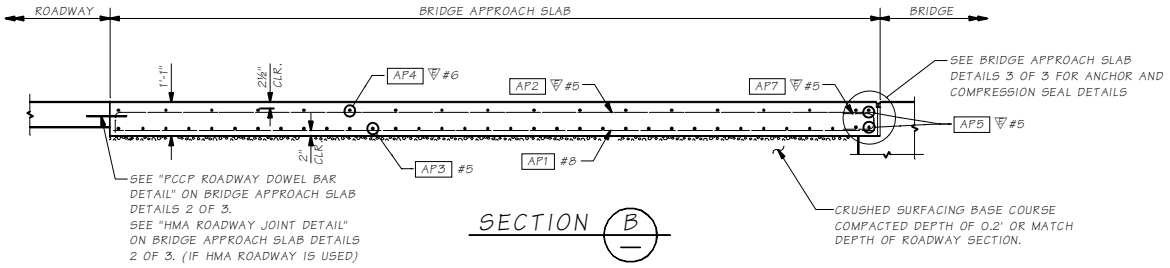

SECTION B

Bridge Design Engr.	M:\STANDARDS\Approach Slabs\Approach Slab 1.MAN				REGION NO.	STATE	FED. AID PROJ. NO.	SHEET NO.	TOTAL SHEETS
Supervisor					10	WASH.			
Designed By					JOB NUMBER				
Checked By									
Detailed By									
Bridge Projects Engr.									
Prelim. Plan By									
Architect/Specialist	DATE	REVISION	BY	APP'D					

BRIDGE AND STRUCTURES OFFICE

Washington State Department of Transportation

APPROACH SLABS

BRIDGE APPROACH SLAB DETAILS 1 OF 3

BRIDGE SHEET NO. SHEET OF SHEETS

SR JOB NO. SHEET 1 10.6-A1-1

Wed Jun 29 07:52:11 2011

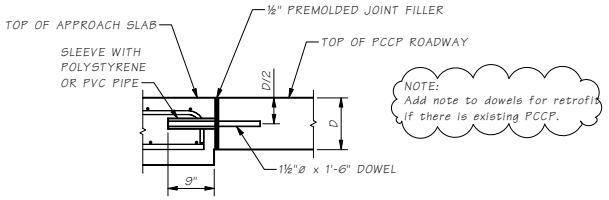

PCCP ROADWAY DOWEL BAR DETAIL

INSERT DOWELS PARALLEL TO CENTER LINE ALONG TRANSVERSE CONSTRUCTION JOINT.

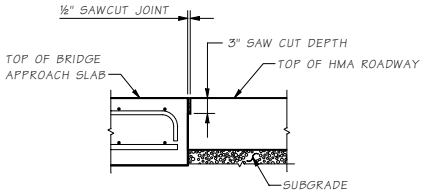

HMA ROADWAY JOINT DETAIL

SAWCUT SHALL BE FILLED WITH HOT-POURED COMPONENT IN ACCORDANCE WITH STANDARD SPECIFICATION SECTION 9-04.2(1) AND SEALED IN ACCORDANCE WITH STANDARD SPECIFICATION SECTION 5-05.3(8)B.

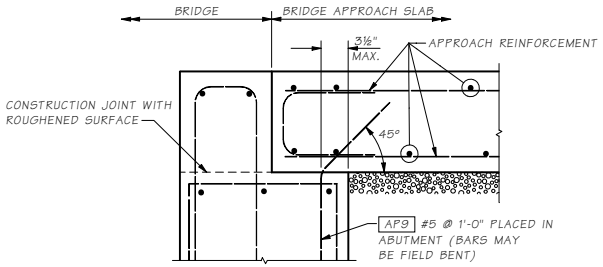

ANCHOR DETAIL

L type abutment

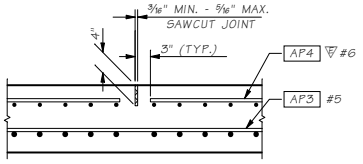

LONGITUDINAL JOINT DETAIL

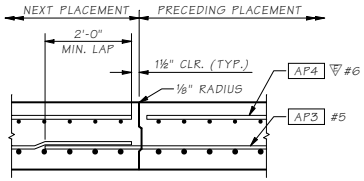

ALTERNATE LONGITUDINAL JOINT DETAIL

EDGE PRECEDING PLACEMENT ONLY WITH ⅛" RADIUS.

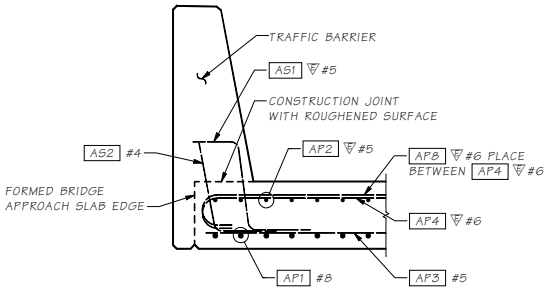

SECTION A 1

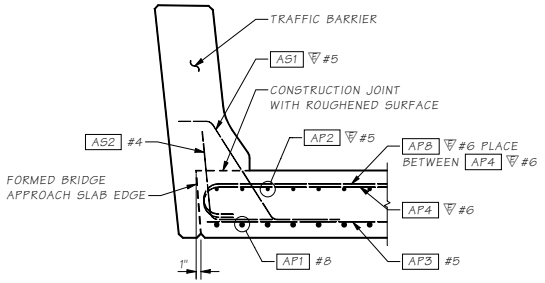

SECTION A 1

eliminate traffic barrier type that will not be used.

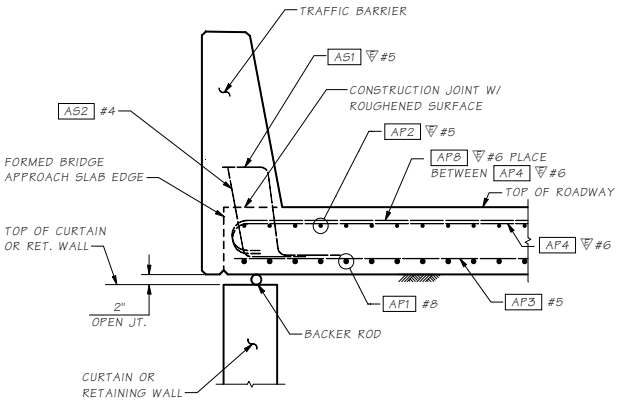

SECTION A 1

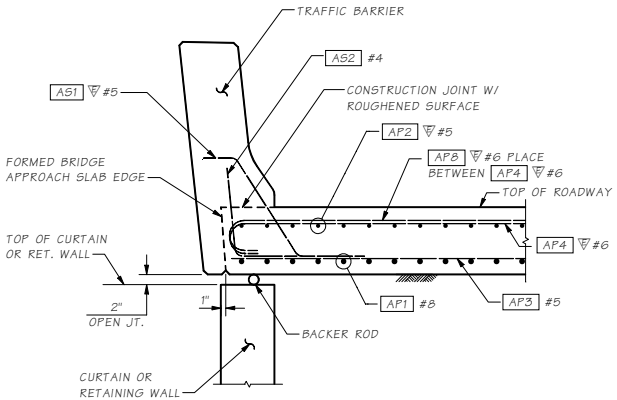

SECTION A 1

Bridge Design Engr.	M:\STANDARDS\Approach Slabs\Approach Slab 2.man				REGION NO.	STATE	FED. AID PROJ. NO.	SHEET NO.	TOTAL SHEETS
Supervisor					10	WASH.			
Designed By					JOB NUMBER				
Checked By									
Detailed By									
Bridge Projects Engr.									
Prelim. Plan By									
Architect/Specialist	DATE	REVISION	BY	APPD					

Thu Sep 02 07:57:27 2010

BRIDGE AND STRUCTURES OFFICE

Washington State Department of Transportation

APPROACH SLABS

BRIDGE APPROACH SLAB DETAILS 2 OF 3

BRIDGE SHEET NO.

SHEET OF SHEETS

SR JOB NO. SHEET

10.6-A1-2

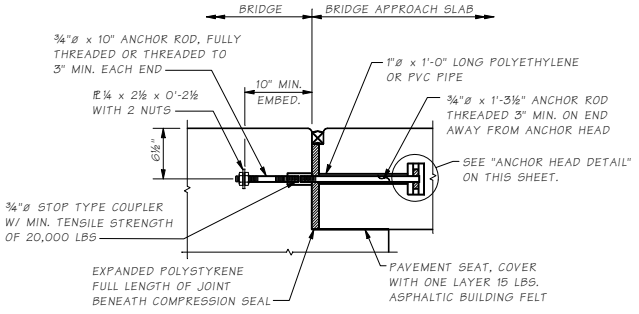

APPROACH ANCHOR - METHOD A

Not for "L" type abutments.

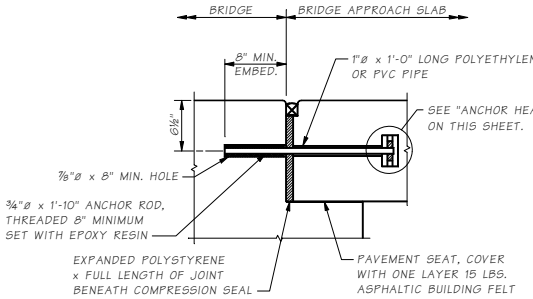

APPROACH ANCHOR - METHOD B

Not for "L" type abutments.

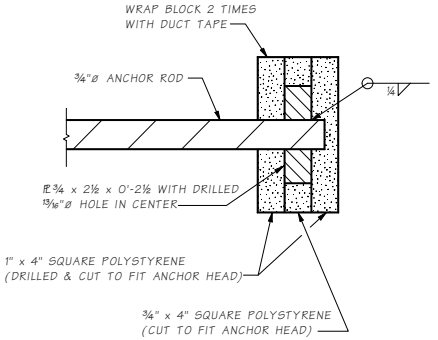

ANCHOR HEAD DETAIL

NOTE:
PAINT METAL COMPONENTS OF APPROACH ANCHOR WITH ONE COAT OF INORGANIC ZINC PAINT CONFORMING TO EITHER SECTION 9-08.1(2)D OR 9-08.1(2)F, OR GALVANIZE APPROACH ANCHORS.

COMPRESSION SEAL TABLE

D.S. BROWN		WATSON BOWMAN ACME	
CV-2502	2½	WA-250	2½

TESTING SHALL BE PER AASHTO M-220 PRIOR TO USE.

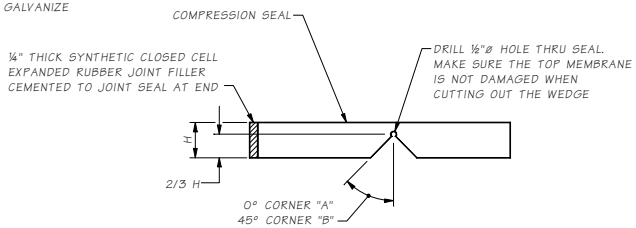

SEAL CUTTING DETAIL

eliminate corner "B" callout for single slope barrrier.

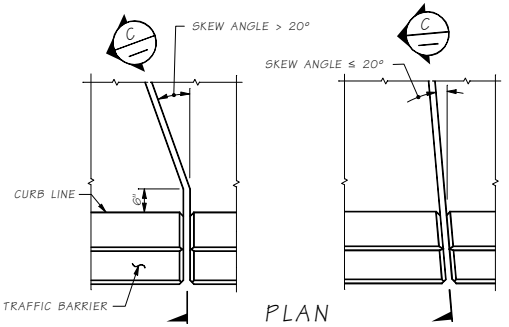

PLAN EXPANSION JOINT

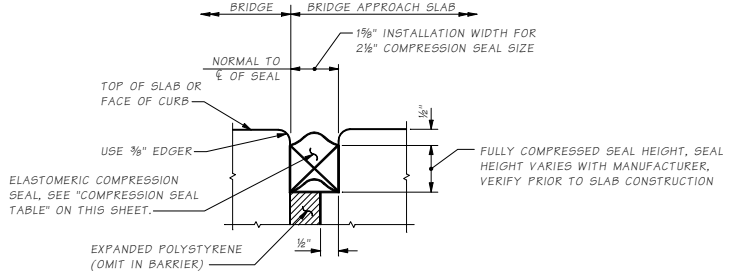

COMPRESSION SEAL DETAIL

EXPANSION JOINT AT BACK OF PAV'T SEAT

NOTE:
Remove expansion joint in barrier details when there is no barrier on approach slab

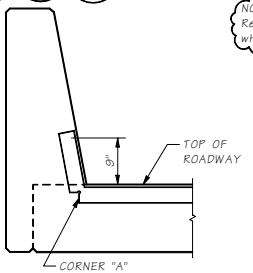

SECTION C

eliminate this detail for f shape barrier.

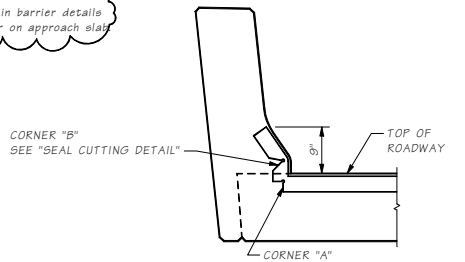

SECTION C

eliminate this detail for single slope barrier.

Bridge Design Engr.	M:\STANDARDS\Approach Slabs\Approach Slab 3.man				REGION NO.	STATE	FED. AID PROJ. NO.	SHEET NO.	TOTAL SHEETS	
Supervisor					10	WASH.				
Designed By										
Checked By					JOB NUMBER					
Detailed By										
Bridge Projects Engr.										
Prelim. Plan By										
Architect/Specialist	DATE	REVISION	BY	APPD						

BRIDGE AND STRUCTURES OFFICE

Washington State Department of Transportation

APPROACH SLABS

BRIDGE APPROACH SLAB DETAILS 3 OF 3

BRIDGE SHEET NO. SHEET OF SHEETS

SR FILE NO. SHEET 10.6-A1-3

Thu Sep 02 07:57:51 2010

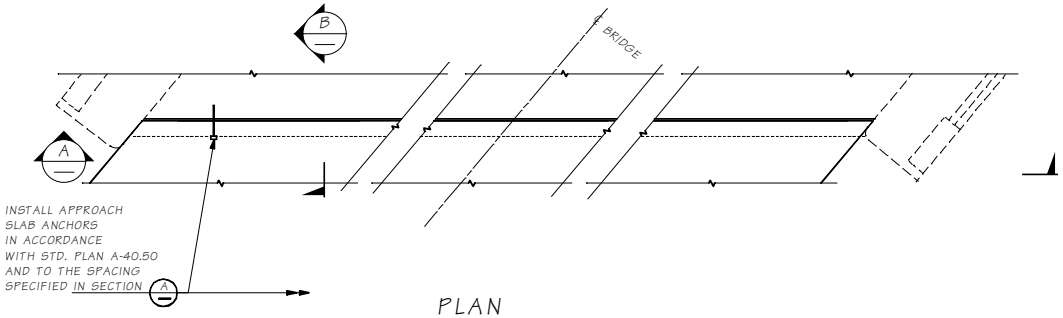

PLAN

* THE DIMENSIONS SHOWN IN THE PLANS ARE BASED ON ORIGINAL CONSTRUCTION RECORDS TOGETHER WITH SURVEY DATA. THESE DIMENSION SHALL BE MEASURED IN THE FIELD BY THE CONTRACTOR PRIOR TO FABRICATION OF ANY COMPONENTS.

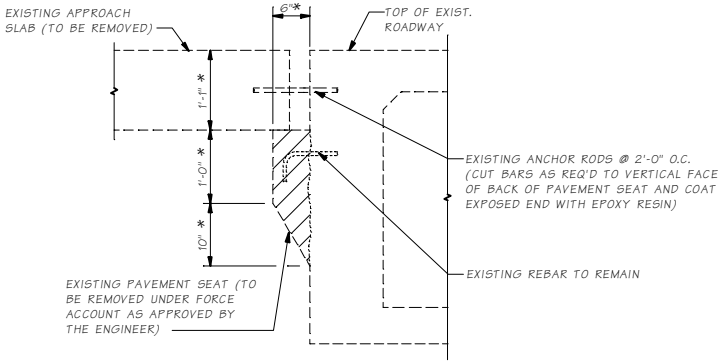

SECTION B

(EXISTING CONDITION)
TYPICAL FOR APPROACH SLAB

* THE DIMENSIONS SHOWN IN THE PLANS ARE BASED ON ORIGINAL CONSTRUCTION RECORDS TOGETHER WITH SURVEY DATA. THESE DIMENSION SHALL BE MEASURED IN THE FIELD BY THE CONTRACTOR PRIOR TO FABRICATION OF ANY COMPONENTS.

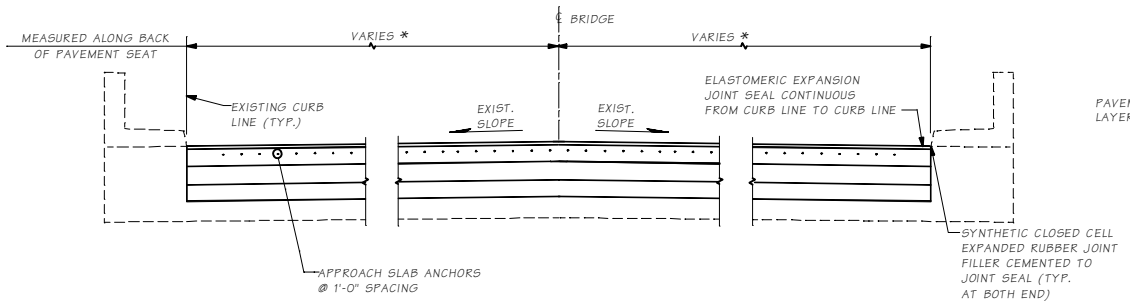

SECTION A

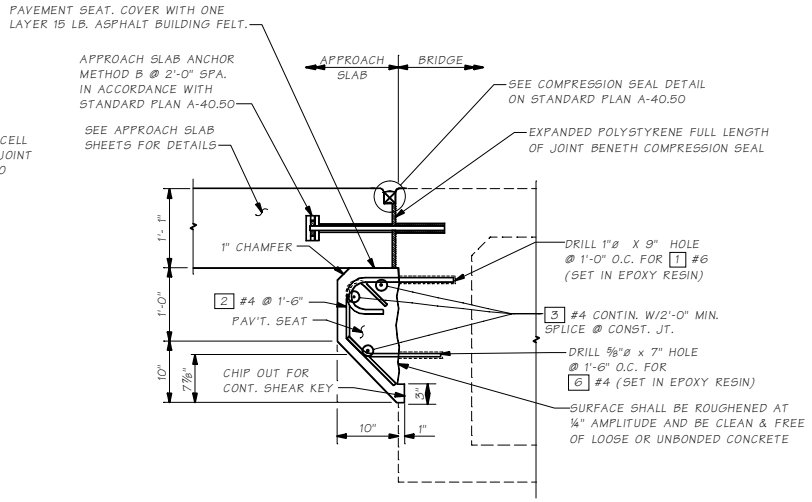

SECTION B

(RETROFIT CONDITION)

BAR LIST

MARK	SIZE	LENGTH	BENDING DIAGRAM(ALL DIMENSIONS ARE OUT TO OUT TO POINTS OF INTERSECTION)
1	6	2'-4"	
2	4	2'-4'	
3	4	(A)	STR.
6	4	1'-3"	

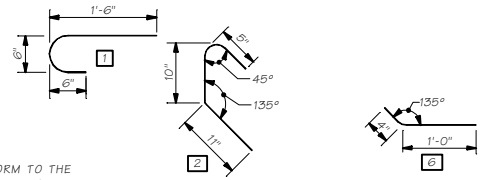

(A) DETERMINE FROM PLANS
BEND BARS AS REQ'D TO CONFORM TO THE CONFIGURATION OF THE ROADWAY CROWN.

Bridge Design Engr.	M:\STANDARDS\Approach Slabs\CONCRETE PAVEMENT SEAT REPAIR.man								
Supervisor						REGION NO.	STATE	FED. AID PROJ. NO.	SHEET NO.	TOTAL SHEETS
Designed By						10	WASH.			
Checked By						JOB NUMBER				
Detailed By										
Bridge Projects Engr.										
Prelim. Plan By										
Architect/Specialist	DATE	REVISION		BY	APP'D					

Wed Jun 29 07:52:11 2011

BRIDGE AND STRUCTURES OFFICE

Washington State Department of Transportation

PAVEMENT SEAT REPAIR

PAVEMENT SEAT REPAIR DETAILS

BRIDGE SHEET NO

SHEET OF SHEETS

SR JOB NO. 1000 SHEET 3

10.6-A2-1

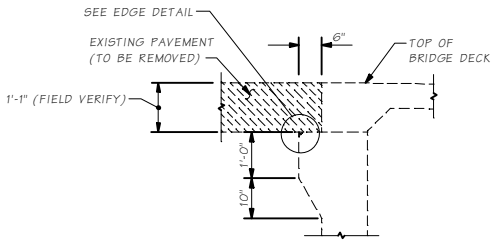

PAVEMENT REMOVAL DETAIL

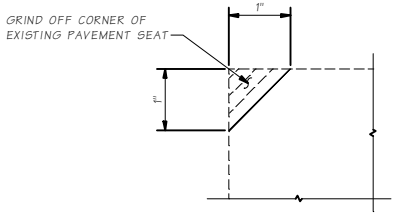

EDGE DETAIL

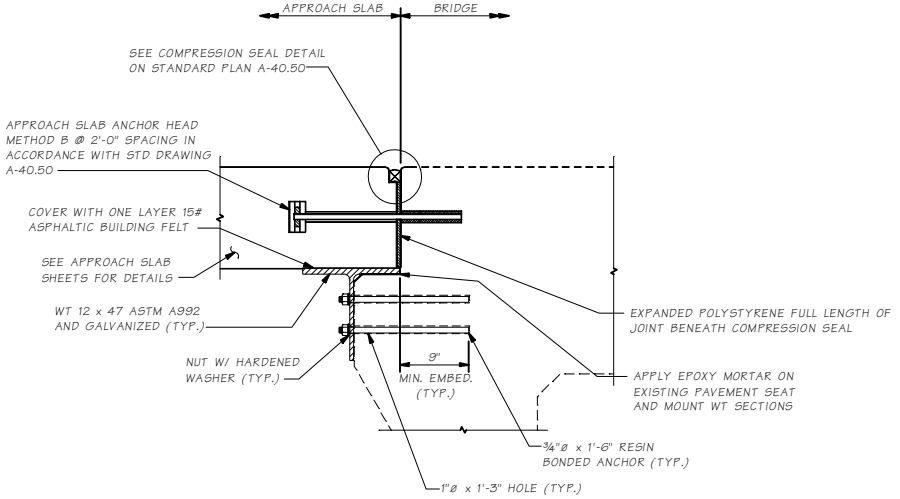

PAVEMENT SEAT REPLACEMENT

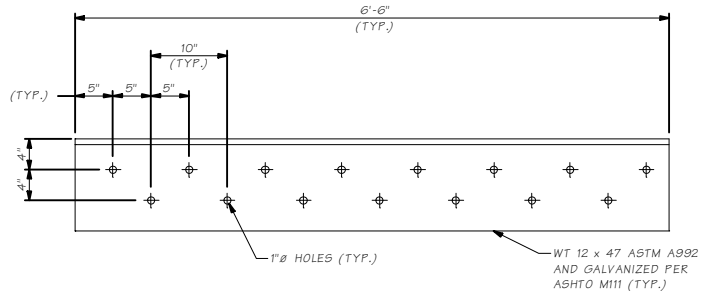

TYPICAL WT 12 SECTION DETAIL

NOTE:
REPAIR EXISTING PAVEMENT SEAT CONCRETE PRIOR TO INSTALLING WT SECTIONS.

Bridge Design Engr:	M:\STANDARDS\Approach Slabs\T-SECTION PAVEMENT SEAT REPAIR.MAN				REGION NO.	STATE	FED. AID PROJ. NO.	SHEET NO.	TOTAL SHEETS
Supervisor					10	WASH.			
Designed By					JOB NUMBER				
Checked By									
Detailed By									
Bridge Projects Engr:									
Prelim. Plan By									
Architect/Specialist	DATE	REVISION	BY	APPD					

BRIDGE AND STRUCTURES OFFICE

Washington State Department of Transportation

PAVEMENT SEAT REPAIR

PAVEMENT SEAT REPAIR DETAILS

BRIDGE SHEET NO.
SHEET OF SHEETS

SR JOB NO. 1000 SHEET 3

10.6-A2-2

Wed Jun 29 07:52:11 2011

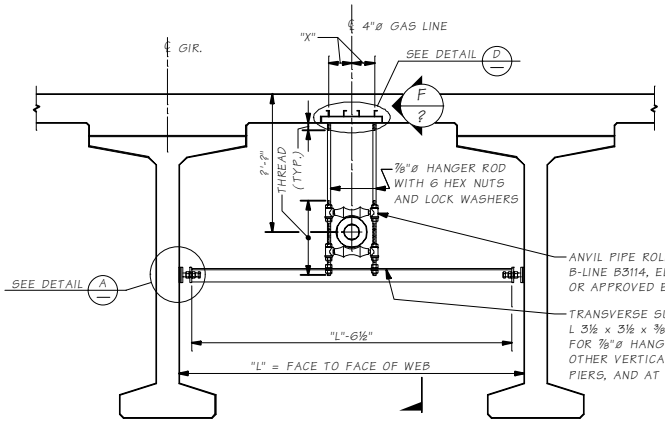

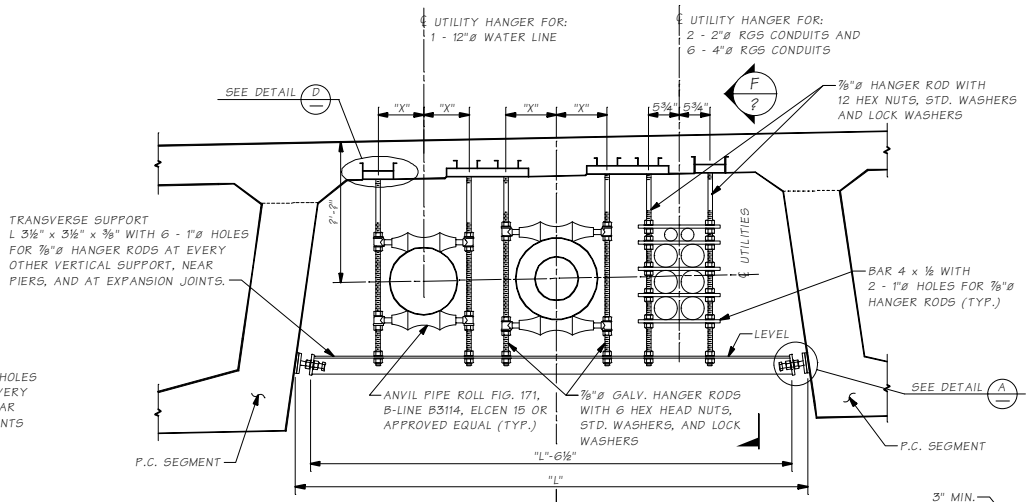

HANGER UTILITY SUPPORT

"X" DETERMINED FROM MANUFACTURER

NOTES:

1. ALL MATERIALS SHALL BE GALVANIZED AFTER FABRICATION PER AASHTO M 111 OR AASHTO M 232 EXCEPT PIPE ROLLERS.
2. PAINT ROLLERS WITH THREE COATS OF GALVANIZING REPAIR PAINT. SEE STD. SPEC. 9-08.2.

NOTES TO DESIGNERS:
- Verify that the insert does not interfere with reinforcement.
- Verify that the load on the insert and rod is acceptable.
- See BDM chapter 10, section 10.8.6 for insert design.
- "DETAIL A" is provided for prestressed girders only. For steel girders use angle iron bolted connections.

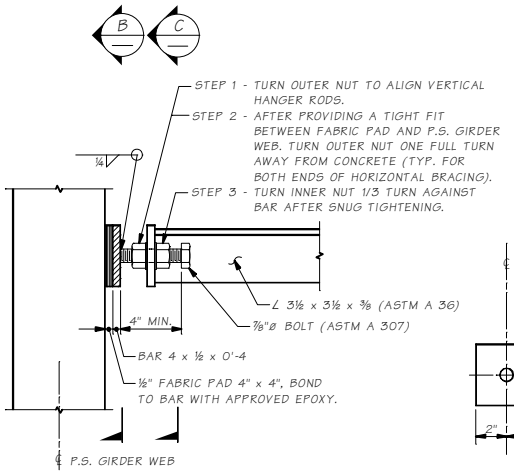

DETAIL A

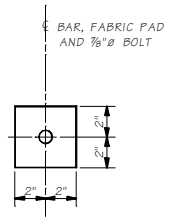

SECTION B

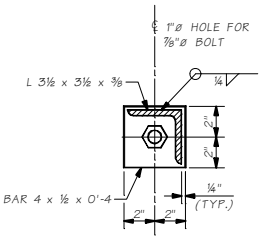

SECTION C

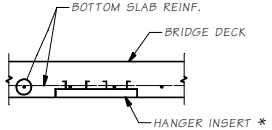

DETAIL D

* COOPER B-LINE B22-I-??, POWERSTRUT PS 349-??, UNISTRUT P32??, OR APPROVED EQUAL (TYP.) WITH SPRING NUT. CHASE THREADS ON HANGER ROD FOR THREAD COMPATIBILITY WITH SPRING NUT. INSERT TO BE INSTALLED LEVEL LONGITUDINALLY AND TRANSVERSELY. PLACE INSERT TO PROVIDE FOR TRANSVERSE ADJUSTMENT OF HANGER RODS. HANGER RODS SHALL NOT BE WITHIN 2" OF THE END OF THE INSERT. TWO INSERTS MAY BE USED TO ACCOMMODATE SUPERELEVATION.

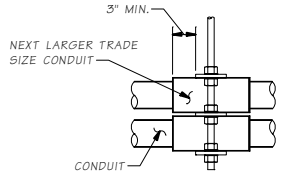

VIEW E

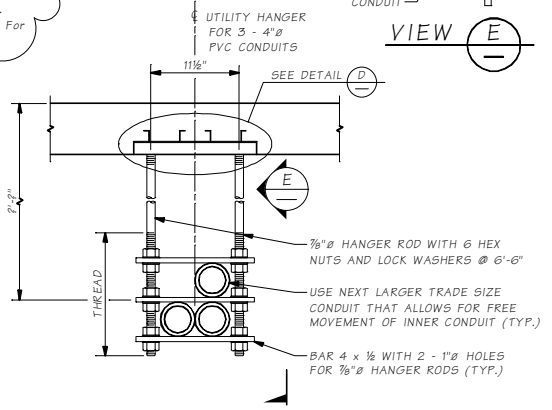

PVC CONDUIT SUPPORT DETAIL

Bridge Design Engr.	M:\STANDARDS\Utilities\Utility Hanger Details.MAN				REGION NO.	STATE	FED. AID PROJ. NO.	SHEET NO.	TOTAL SHEETS
Supervisor					10	WASH.			
Designed By					JOB NUMBER				
Checked By									
Detailed By									
Bridge Projects Engr.									
Prelim. Plan By									
Architect/Specialist	DATE	REVISION	BY	APPD					

BRIDGE AND STRUCTURES OFFICE

Washington State Department of Transportation

UTILITY INSTALLATION GUIDELINE DETAILS FOR EXISTING BRIDGES

UTILITY HANGER DETAILS

BRIDGE SHEET NO.

SHEET OF SHEETS

SR ___ JOB NO. 10.8-A1-1 SHEET 1

Wed Jun 29 07:52:10 2011

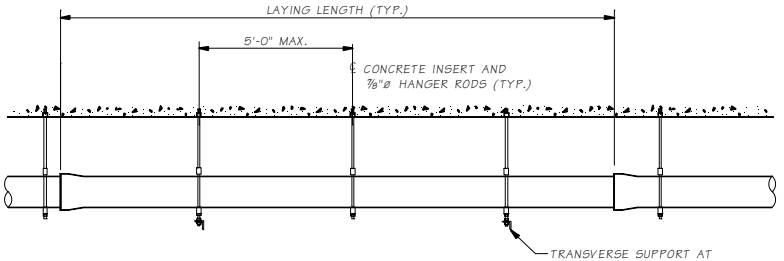

SECTION F ?
RGS OR PVC CONDUIT

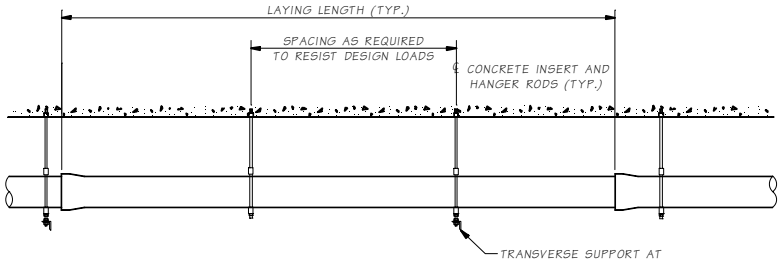

SECTION F ?
UTILITIES OTHER THAN
RGS OR PVC CONDUITS

NOTE TO DESIGNER:
COORDINATE WITH UTILITY ENGINEER FOR CONDUIT PLACEMENT DETAILS AT ABUTMENTS FOR UTILITIES OTHER THAN RGS OR PVC.

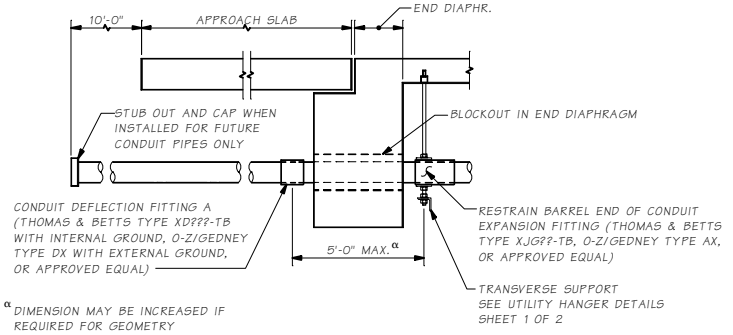

UTILITY CONDUIT PLACEMENT DETAIL ~ RGS

SEE BARRIER SHEETS FOR CONDUIT DEFLECTION FITTING A DETAIL.

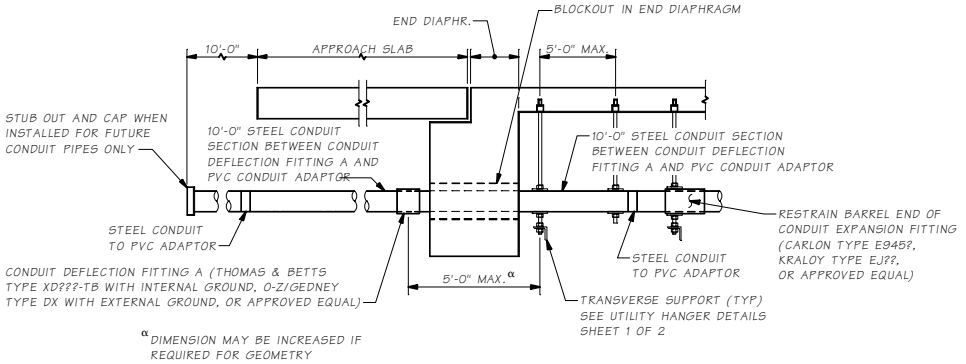

UTILITY CONDUIT PLACEMENT DETAIL ~ PVC

NOTES:

1. SET POSITION OF EXPANSION FITTING BASED ON MANUFACTURER RECOMMENDATIONS AND TEMPERATURE AT TIME OF INSTALLATION.
2. EXPANSION FITTINGS SHALL BE INSTALLED EVERY 100'-0" MAX. AND SHALL ACCOMMODATE 5.1 INCHES OF MOVEMENT. THE DESIGN TEMPERATURE RANGE IS 125 DEGREES (-15° TO 110°).
3. SEE BARRIER SHEETS FOR CONDUIT DEFLECTION FITTING A DETAIL.

Bridge Design Engr.	M:\STANDARDS\Utilities\Utility Hanger Details 2.MAN							
Supervisor				REGION NO.	STATE	FED. AID PROJ. NO.	SHEET NO.	TOTAL SHEETS
Designed By				10	WASH.			
Checked By				JOB NUMBER				
Detailed By								
Bridge Projects Engr.								
Prelim. Plan By								
Architect/Specialist	DATE	REVISION	BY	APPD				

BRIDGE AND STRUCTURES OFFICE

Washington State Department of Transportation

UTILITY INSTALLATION GUIDELINE DETAILS FOR EXISTING BRIDGES

UTILITY HANGER DETAILS

BRIDGE SHEET NO. | SHEET | OF | SHEETS

SR | JOB NO. | SHEET 1

10.8-A1-2

Wed Jun 29 07:52:11 2011

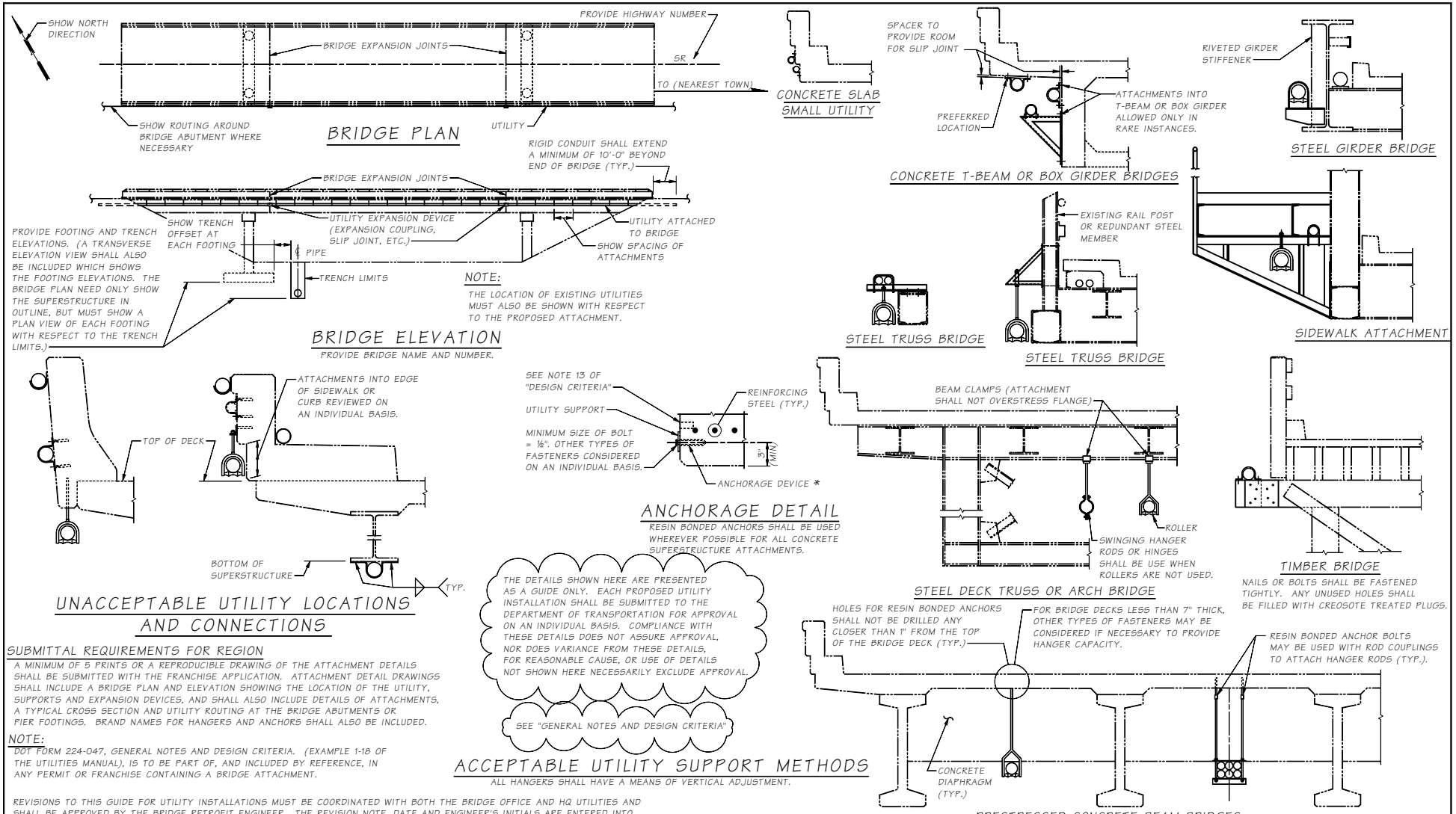

SUBMITTAL REQUIREMENTS FOR REGION

A MINIMUM OF 5 PRINTS OR A REPRODUCIBLE DRAWING OF THE ATTACHMENT DETAILS SHALL BE SUBMITTED WITH THE FRANCHISE APPLICATION. ATTACHMENT DETAIL DRAWINGS SHALL INCLUDE A BRIDGE PLAN AND ELEVATION SHOWING THE LOCATION OF THE UTILITY, SUPPORTS AND EXPANSION DEVICES, AND SHALL ALSO INCLUDE DETAILS OF ATTACHMENTS, A TYPICAL CROSS SECTION AND UTILITY ROUTING AT THE BRIDGE ABUTMENTS OR PIER FOOTINGS. BRAND NAMES FOR HANGERS AND ANCHORS SHALL ALSO BE INCLUDED.

NOTE:

DOT FORM 224-047, GENERAL NOTES AND DESIGN CRITERIA. (EXAMPLE 1-18 OF THE UTILITIES MANUAL), IS TO BE PART OF, AND INCLUDED BY REFERENCE, IN ANY PERMIT OR FRANCHISE CONTAINING A BRIDGE ATTACHMENT.

REVISIONS TO THIS GUIDE FOR UTILITY INSTALLATIONS MUST BE COORDINATED WITH BOTH THE BRIDGE OFFICE AND HQ UTILITIES AND SHALL BE APPROVED BY THE BRIDGE RETROFIT ENGINEER. THE REVISION NOTE, DATE AND ENGINEER'S INITIALS ARE ENTERED INTO THE BORDER REVISION BLOCK BY THE CADD OPERATOR AFTER APPROVAL. A FULL SIZE PAPER PRINT IS THEN SENT TO "PUBLICATIONS" THROUGH THE HQ UTILITIES ENGINEER FOR REDUCTION TO 11"X17" AND DISTRIBUTION TO ALL BRIDGE DESIGN MANUAL AND UTILITY MANUAL HOLDERS. CROSS REFERENCE: BRIDGE DESIGN MANUAL - SECTION 8, APPENDIX A (YELLOW COPIES), UTILITIES MANUAL - CHAPTER 1, EXAMPLES SECTION (WHITE COPIES)

MAY BE USED ONLY ON SIMPLE SPAN BRIDGES. UTILITY SHALL BE CARRIED BELOW DIAPHRAGMS. CORE DRILLING THROUGH THE END DIAPHRAGM OR ABUTMENT WALL MAY BE ALLOWED ON A CASE BY CASE BASIS. FOR CONTINUOUS SPAN BRIDGES ATTACHMENTS OF THIS NATURE ARE GENERALLY NOT ALLOWED BECAUSE OF INTERFERENCE WITH THE PIER DIAPHRAGMS OR CROSSBEAMS WHICH ARE CONSIDERED MAIN STRUCTURAL MEMBERS.

Bridge Design Engr.	M:\STANDARDS\Utilities\Utility Hanger Details.man				REGION NO.	STATE	FED. AID PROJ. NO.	SHEET NO.	TOTAL SHEETS
Supervisor					10	WASH.			
Designed By									
Checked By					JOB NUMBER				
Detailed By									
Bridge Projects Engr.									
Prelim. Plan By									
Architect/Specialist	DATE	REVISION	BY	APP'D					

BRIDGE AND STRUCTURES OFFICE

Washington State Department of Transportation

UTILITY INSTALLATION GUIDELINE DETAILS FOR EXISTING BRIDGES

UTILITY HANGER DETAILS

BRIDGE SHEET NO. SHEET OF SHEETS

SR JOB NO. 10.9-A1-1 SHEET 1

Fri Sep 03 09:45:25 2010

ALTERNATE MODIFICATION FOR BRIDGE DRAIN TYPES "1", "1B" & "1C"

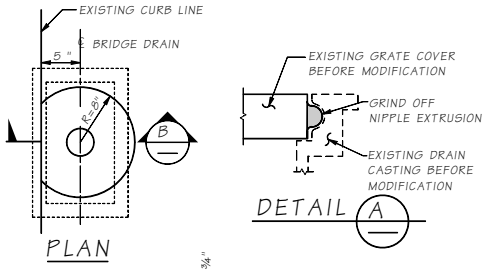

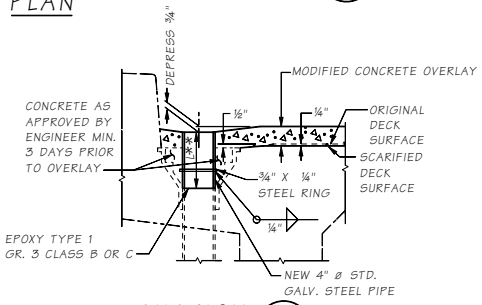

** ACTUAL PIPE LENGTH (L) SHALL BE DETERMINED BY THE CONTRACTOR IN THE FIELD AND SHALL BE INSTALLED AS SHOWN ON THIS SHEET.

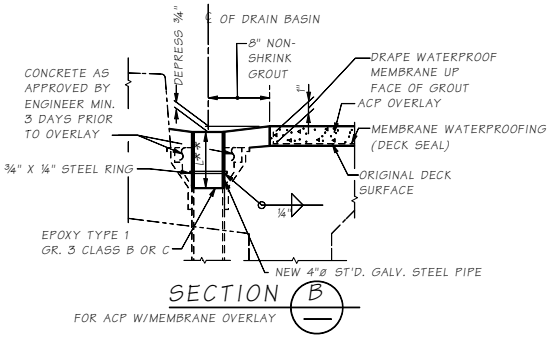

** ACTUAL PIPE LENGTH (L) SHALL BE DETERMINED BY THE CONTRACTOR IN THE FIELD AND SHALL BE INSTALLED AS SHOWN ON THIS SHEET.

OVERLAY MODIFICATION FOR BRIDGE DRAIN TYPE 6

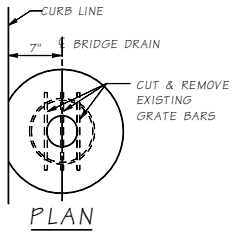

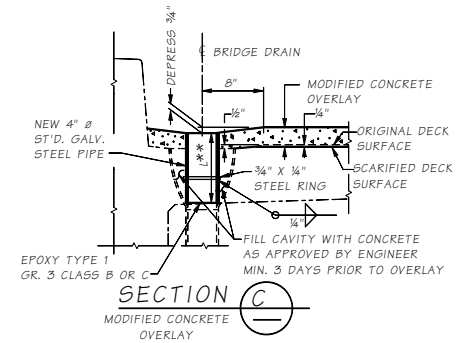

** ACTUAL PIPE LENGTH (L) SHALL BE DETERMINED BY THE CONTRACTOR IN THE FIELD AND SHALL BE INSTALLED AS SHOWN ON THIS SHEET.

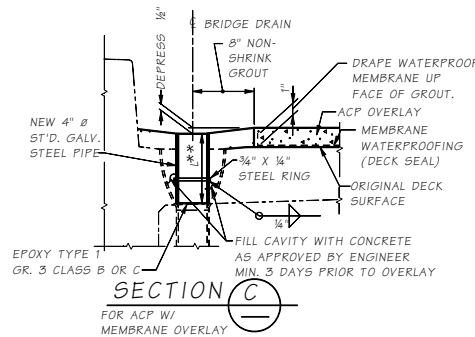

** ACTUAL PIPE LENGTH (L) SHALL BE DETERMINED BY THE CONTRACTOR IN THE FIELD AND SHALL BE INSTALLED AS SHOWN ON THIS SHEET.

DRAIN MODIFICATION BY CORE DRILLING

THIS MODIFICATION MAY BE REQUIRED WHEN THE EXISTING DRAIN IS NOT FUNCTIONAL AND CANNOT BE MADE FUNCTIONAL OR WHEN THE EXISTING DRAIN MUST BE PERMANENTLY PLUGGED AND RELOCATED, AS WITH A WIDENING.

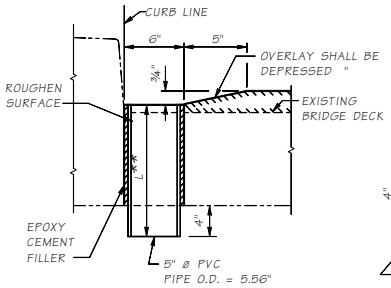

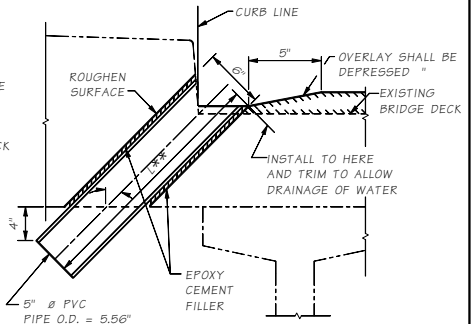

ELEVATION VIEW STRAIGHT DROP

** ACTUAL PIPE LENGTH (L) SHALL BE DETERMINED BY THE CONTRACTOR IN THE FIELD AND SHALL BE INSTALLED AS SHOWN ON THIS SHEET.

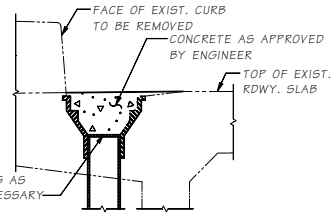

ELEVATION VIEW INCLINED DROP

** ACTUAL PIPE LENGTH (L) SHALL BE DETERMINED BY THE CONTRACTOR IN THE FIELD AND SHALL BE INSTALLED AS SHOWN ON THIS SHEET.

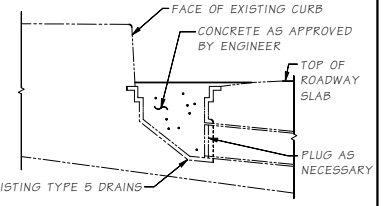

BRIDGE DRAIN PLUG DETAIL

(LOCATIONS)

REMOVE DRAIN GRATING & GALV. STEEL CHAIN. FILL DRAIN WITH CONCRETE GROUT AFTER PLUGGING.

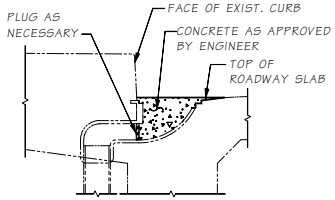

BRIDGE DRAIN PLUG DETAIL

(LOCATIONS)

REMOVE DRAIN GRATING & GALV. STEEL CHAIN. FILL DRAIN WITH CONCRETE GROUT AFTER PLUGGING.

BRIDGE DRAIN PLUG DETAL

REMOVE DRAIN GRATING & GALV. STEEL CHAIN. FILL DRAIN WITH CONCRETE GROUT AFTER PLUGGING.

NOTES

1. DIMENSIONS AND DETAILS OF EXISTING DRAIN TYPES 1 THRU 6, INCLUDING REVISIONS B, C, AND CR, ARE BASED ON "STANDARDS FOR BRIDGE CONSTRUCTION". SHEET E-13, DATED 12/29/67 AND BEFORE.
2. FOR STANDARD BRIDGE DRAINS DATED SEPTEMBER 1, 1965, AND AFTER. IT WILL BE NECESSARY TO GRIND OFF THE NIPPLE EXTRUSION ON ONE SHORT SIDE OF THE TYPICAL GRATE COVER.
3. ALL NEW STEEL EXCEPT STEEL PIPE SHALL BE AASHTO M 183. STEEL PIPE SHALL CONFORM TO ASTM A 53 GRADE B. ALL STEEL SHALL BE GALVANIZED PER AASHTO M 111.

** ACTUAL PIPE LENGTH (L) SHALL BE DETERMINED BY THE CONSTRACTOR IN THE FIELD AND SHALL BE INSTALLED AS SHOWN ON THIS SHEET.

± THESE SPACINGS ARE TYPICAL HOWEVER OTHER SPACINGS MAY EXIST

GENERAL NOTES

THIS SHEET IS INTENDED FOR USE AS A STANDARD FOR DRAIN MODIFICATIONS WHICH ARE REQUIRED WITH BRIDGE DECK OVERLAYS OF 1 " NOMINAL THICKNESS. MODIFICATIONS PERTAIN ONLY TO THE STANDARD DRAINS DESCRIBED IN NOTE 1 ABOVE.

Bridge Design Engr.	M:\STANDARDS\Drainage\DRAIN-LIB.MAN				REGION NO.	STATE	FED. AID PROJ. NO.	SHEET NO.	TOTAL SHEETS
Supervisor					10	WASH.			
Designed By									
Checked By					JOB NUMBER				
Detailed By									
Bridge Projects Engr.									
Prelim. Plan By									
Architect/Specialist	DATE	REVISION	BY	APP'D					

BRIDGE AND STRUCTURES OFFICE

Washington State Department of Transportation

BRIDGE DRAIN MODIFICATION

BRIDGE DRAIN MODIFICATION

BRIDGE SHEET NO.

SHEET OF SHEETS

SR JOB NO. 000 SHEET 1

10.11-A1-1

Thu Sep 02 14:12:10 2010 dgn: 12/11/97

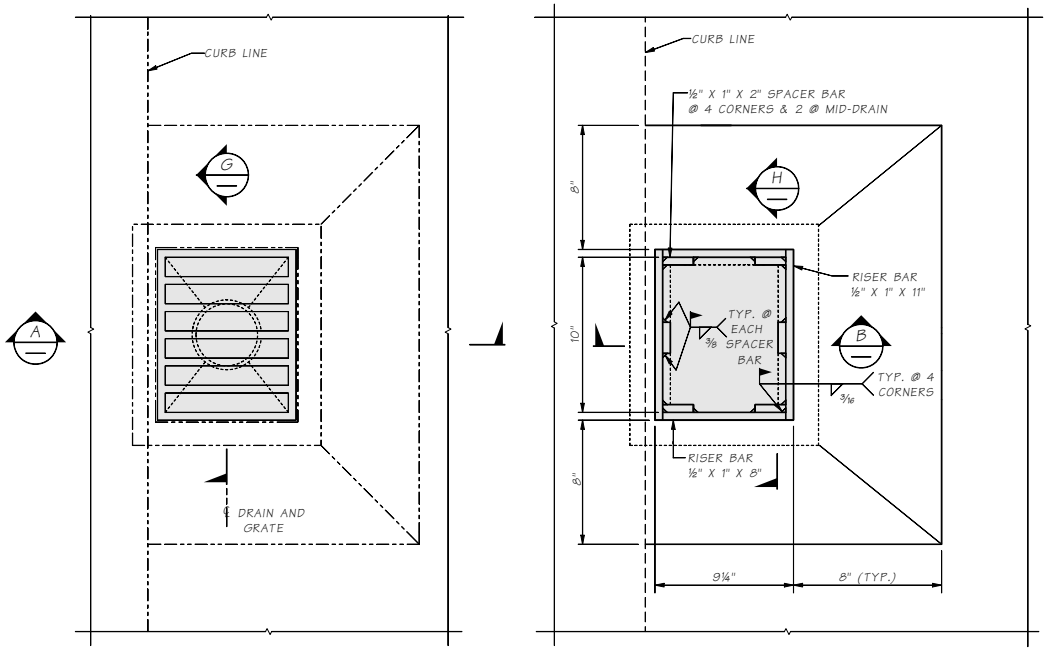

PLAN - EXISTING DRAIN

PLAN AFTER RETROFIT

EXISTING DRAIN GRATE NOT SHOWN
REUSE GRATE AFTER MODIFICATION

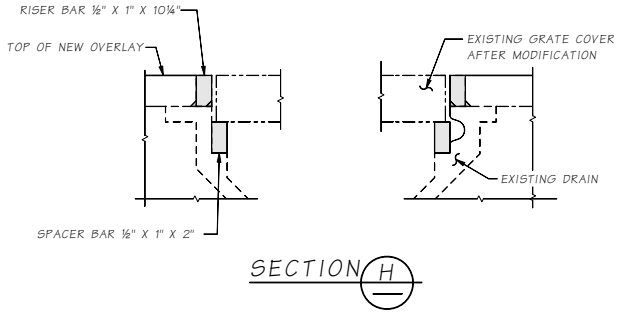

SECTION H

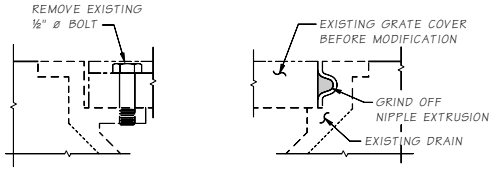

SECTION G

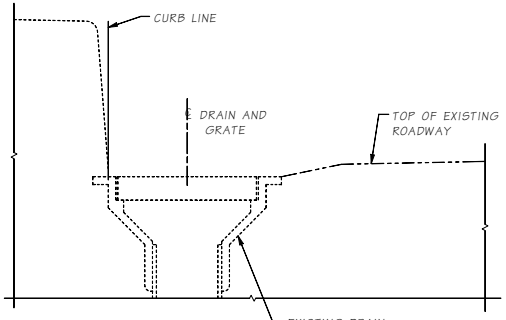

SECTION A
EXISTING CONDITION
16 REQUIRED

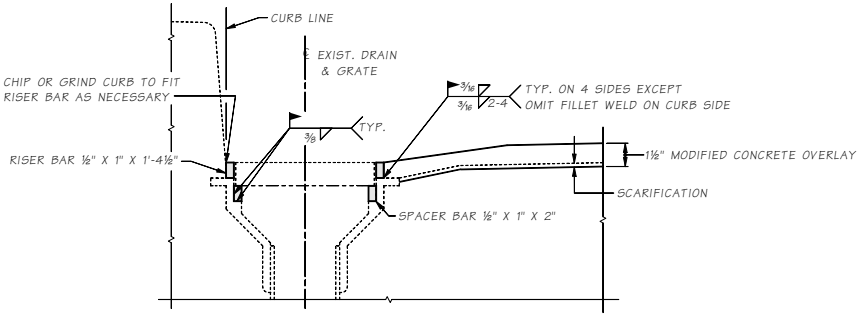

SECTION B
MODIFIED CONDITION

Bridge Design Engr.	M:\STANDARDS\Drainage\DRAIN_TYPE_2_THRU_5_MOD_DETAIL.MAN				REGION NO.	STATE	FED. AID PROJ. NO.	SHEET NO.	TOTAL SHEETS
Supervisor					10	WASH.			
Designed By					JOB NUMBER				
Checked By									
Detailed By									
Bridge Projects Engr.									
Prelim. Plan By									
Architect/Specialist	DATE	REVISION	BY	APPD					

BRIDGE AND STRUCTURES OFFICE

Washington State Department of Transportation

BRIDGE DRAIN MODIFICATION

BRIDGE DRAIN TYPES 2 THRU 5 MODIFICATION FOR OVERLAY

BRIDGE SHEET NO.

SHEET OF SHEETS

SR JOB NO. 10.11-A1-2 SHEET 1

Thu Sep 02 14:12:07 2010

Chapter 11 Detailing Practice Contents

11.1 Detailing Practice 11.1-1
11.1.1 Standard Office Practices 11.1-1
11.1.2 Bridge Office Standard Drawings and Office Examples 11.1-8
11.1.3 Plan Sheets 11.1-8
11.1.4 Electronic Plan Sharing Policy 11.1-10
11.1.5 Structural Steel 11.1-11
11.1.6 Aluminum Section Designations 11.1-12
11.1.7 Abbreviations 11.1-12

Appendix 11.1-A1 . . . . . 11.1-A1-1
Appendix 11.1-A2 . . . . . 11.1-A2-1
Appendix 11.1-A3 . . . . . 11.1-A3-1
Appendix 11.1-A4 Footing Layout 11.1-A4-1

11.1 Detailing Practice

The following is to provide basic information on drafting and the fundamentals of Bridge and Structures Office drafting practices.

11.1.1 Standard Office Practices

A. **Purpose**

- The purpose of these standards is to enable the Bridge and Structures Office to produce **consistent** and **effective** plan sheets that will have uniform appearance and information.
- Designers and detailers are responsible for ensuring that these criteria are implemented.
- The Bridge Design Engineer must approve deviation from these standards.

B. **Planning**

- The designer and the structural detailer together coordinate the **scope** of the detailing work involved in each project. Time should be allotted for checking plans for accuracy and consistency with office practices.
- Similar bridge plans and details should be reviewed and kept as **examples** for maintaining consistent detailing practices. These examples should not be older than three years.

C. **Drawing Orientation and Layout Control**

- Standard bridge sheet format is 34 inches × 22 inches with the bottom 2 inches used for title block and related information.
- Contract plans are printed, sealed, signed and submitted, half size, on 11″ × 17″ paper.
- Drawings shall be carefully organized so the intent of the drawing is easily understood.
  - **North arrow** shall be placed on layouts and footing/foundation layouts.
  - **Related details** shall be grouped together in an orderly arrangement: lined up horizontally and vertically and drawn to the same scale.
  - Do not crowd the drawing with details.
  - The following is a standard sheet configuration when plan, elevation, and sectional views are required.
  - The Plan view layout of structures should be oriented from left to right in the direction of increasing state route mileposts. For retaining walls, see the second bullet under subsection I. For layouts of existing bridges undergoing widening, expansion joint or thrie beam retrofit, or other structural modification, this orientation requirement may result in the bridge layout being opposite from what is shown in the original plans. In such cases, the designer and detailer should review the Bridge Preservation Office inspection records for the bridge, and the bridge layout orientation and pier identification should be laid out to be consistent with the Bridge Preservation Office inspection records.

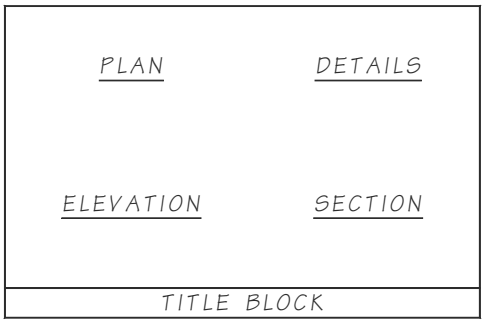

D. **Lettering**

1. **General**

- **Lettering** shall be upper case only, slanted at approximately 68 degrees. General text is to be approximately ⅛″ high.
- Text shall be **oriented** so as to be read from the **bottom** or **right edge** of the sheet.
- **Detail titles** shall be a similar font as general text, about twice as high and of a heavier weight. Underline all titles with a single line having the same weight as the lettering.

2. **Dimensioning**

- A dimension shall be shown **once** on a drawing. Duplication and unnecessary dimensions should be avoided.
- All dimension figures shall be placed above the dimension line, so that they may be read from the bottom or the right edge of the sheet, as shown in the following detail:

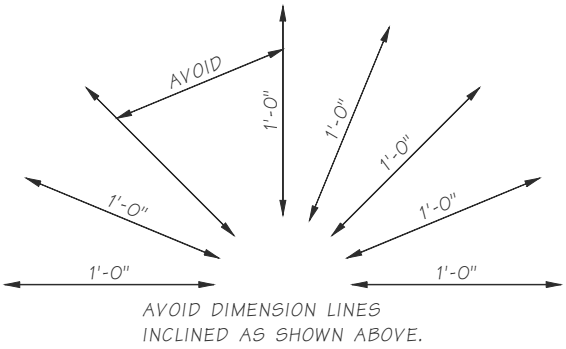

- When details or structural elements are complex, utilize two drawings, one for dimensions and the other for reinforcing bar details.
- Dimensions 12 inches or more shall be given in feet and inches unless the item dimensioned is conventionally designated in inches (for example, 16″ pipe).
- Dimensions that are less than one inch over an even foot, the fraction shall be preceded by a zero (for example, 3′-0¾″).
- Place dimensions outside the view, preferably to the right or below. However, in the interest of clarity and simplicity it may be necessary to place them otherwise. Examples of dimensioning placement are shown on Appendix 11.1-A1.

E. **Line Work**

- All line work must be of sufficient size, weight, and clarity so that it can be easily read from a print that has been reduced to 11″ × 17″ or one-half the size of the original drawing.
- The line style used for a particular structural outline, centerline, etc., shall be kept consistent wherever that line is shown within a set of bridge plans.
- Line work shall have appropriate gradations of width to give line contrast as shown below. Care shall be taken that the thin lines are dense enough to show clearly when reproduced.

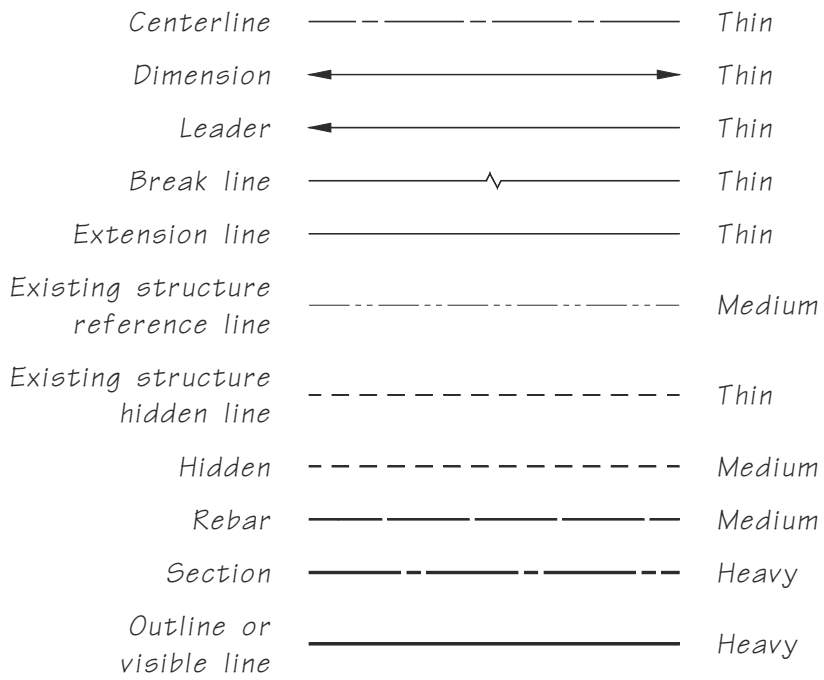

- When drawing structural sections showing reinforcing steel, the **outline** of the sections shall be a **heavier** line weight than the **rebar**.
- The order of **line precedence** (which of a pair of crossing lines is broken) is as follows:

  1. Dimension lines are never broken.
  2. Leader line from a callout.
  3. Extension line.

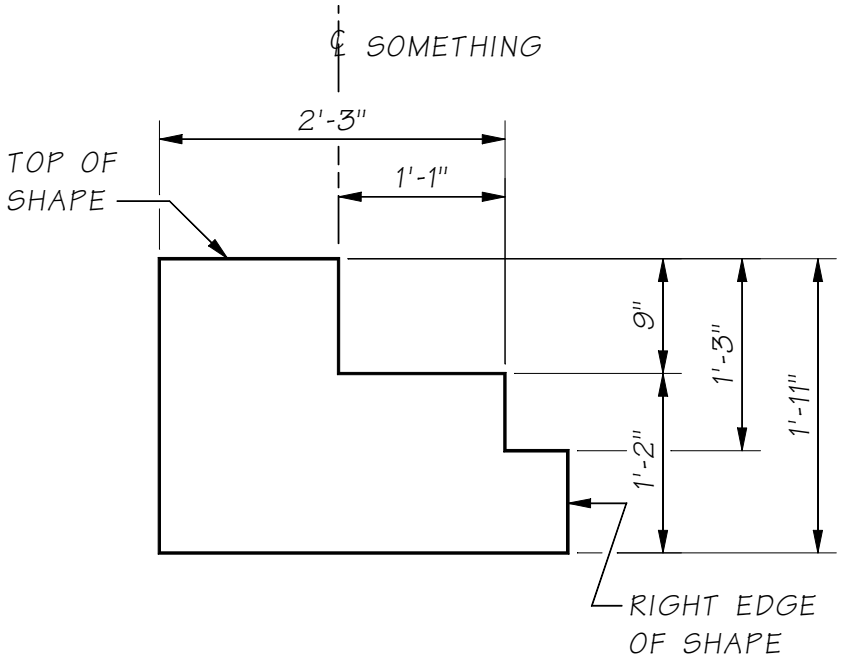

LINE PRECEDENCE DIAGRAM

THIS DIAGRAM DEMONSTRATES WHICH LINE IS TO BE BROKEN WHEN TWO LINES CROSS.

F. **Scale**

- Scales are not to be shown in the plans.
- When **selecting a scale**, it should be kept in mind that the drawing will be reduced. Generally, the minimum scale for a section detail with rebar is ⅜″ = 1′. The minimum scale to be used on steel details will be ¾″ = 1′.
- The contract plan sheets are not to be used to take measurements in the field. They will, however, be drawn using **scales that can be found on any standard architectural or engineering scale**.
- Care should be taken that all structural elements are **accurately** drawn to scale.
- Sections and views may be enlarged to show more detail, but the number of different scales used should be kept to a minimum.

G. **Graphic Symbols**

1. Graphic symbols shall be in accordance with the following:
   a) Structural steel shapes: See also AISC *Manual of Steel Construction*.
   b) Welding symbols: See Lincoln Welding Chart.
   c) Symbols for hatching different materials are shown on Appendix 11.1-A2.

H. **Structural Sections, Views and Details**

- A **section** cuts through the structure, a view is from outside the structure, a **detail** shows a structural element in more detail – usually a larger scale.
- Whenever possible, sections and views shall be taken looking to the **right, ahead on stationing**, or **down**.
- Care shall be taken to ensure that the **orientation** of a detail drawing is identical to that of the plan, elevation, etc., from which it is taken. Where there is a **skew** in the bridge any sections should be taken from **plan** views.
- The default is to be looking ahead on stationing. The only mention of view orientation is if the view is looking back on stationing.
- On plan and elevation drawings where there is insufficient space to show cut sections and details, the section and detail drawing should be on the plan sheet immediately following the plan and elevation drawing unless there are a series of related plans. If it is impractical to show details on a section drawing, a detail sheet should immediately follow the section drawing. In other words, the order of plan sheets should be from general plan to more minute detail.
- A circle divided into upper and lower halves shall identify structural sections, views, and details. Examples are shown in Appendix 11.1-A3.
- Breaks in lines are allowable provided that their intent is clear.

I. **Miscellaneous**

- **Callout arrows** are to come off either the beginning or end of the sentence. This means the top line of text for arrows coming off the left of the callout or the bottom line of text for arrows pointing right.
- Except for the Layout, **wall elevations** are to show the exposed face regardless of direction of stationing. The Layout sheet stationing will read increasing left to right. The elevation sheets will represent the view in the field as the wall is being built.

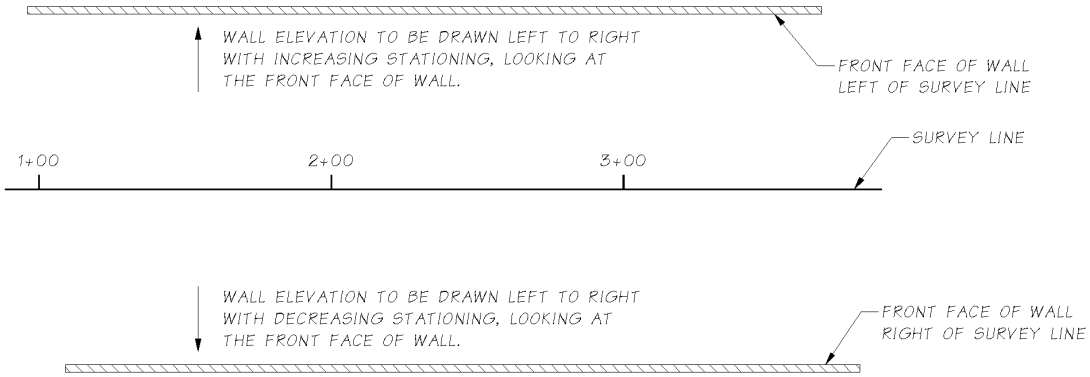

Plan

- Do not detail a bridge element in more than one location. If the element is changed there is a danger that only one of the details is updated.
- Centerline callouts shall be normal to the line itself approximately an eighth inch from the end of the line:

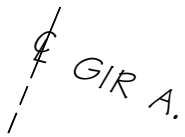

J. **Revisions**

- **Addendums** are made after general distribution and project ad but before the contract is awarded. Changes made to the plan sheets during this time shall be **shaded** or clouded in accordance with the WSDOT *Plans Preparation Manual* M 22-31 Appendix 5 (note that all table entry revisions shall be shaded). Subsequent addendums are shaded and the shading from previous addendums is removed.
- **Change orders** are made after the contract has been awarded. Changes will be marked with a number inside a circle inside a **triangle**.  Shading for any addendums is removed.
- All addendums and change orders will be noted in the **revision block** at the bottom of the sheet using font 25.

K. **Title Block**

- The project title is displayed in the contract plan sheet title block. The title consists of Line 1 specifying the highway route number(s), Line 2 and possibly Line 3 specifying the title verbiage. Bridge structures use a fourth line, in a smaller font, to specify the bridge name and number in accordance with the WSDOT *Bridge List* M 23-09 and BDM Sections 2.3.1.A and 2.3.2.A.
- The exact wording of Lines 1, 2, and 3 of the project title, including line arrangement, abbreviations, and punctuation, is controlled by the project definition as specified by legislative title and the Capital Program Management System (CPMS) database.
- The highway route number(s) in Line 1 shall be consistent with WSDOT naming practice. Interstate routes (5, 82, 90, 182, 205, 405, and 705) shall be specified as I-(number). US routes (2, 12, 97, 97A, 101, 195, 197, 395, and 730) shall be specified as US (number). All other routes shall be specified as SR (number). Projects including two highway routes shall include both route numbers in Line 1, as in "US 2 And I-5". Projects including three or more highway routes shall be specified with the lowest numbered route, followed by "Et Al", as in "SR 14 Et Al".
- The job number block just to the left of the middle of the title block shall display the PS&E Job Number assigned to the project by the Region Plans Office. The PS&E Job Number consists of six characters. The first two characters correspond to the last two digits of the calendar year. The third character corresponds to the letter designation assigned to the specific Region (NWR - A, NCR - B, OR - C, WSF and selected UCO projects - W, SWR - X, SCR - Y, and ER - Z). The final three characters correspond to the three digit number assigned to the specific project by the Region Plans Office.

L. Reinforcement Detailing

- Contract documents shall convey all necessary information for fabrication of reinforcing steel. In accordance with *Standard Specification* 6-02.3(24), reinforcing steel details shown in the bar list shall be verifiable in the plans and other contract documents.
- Reinforcement type and grade is specified in *Standard Specification* 9-07.2 and need not be provided elsewhere in the contract documents unless it differs.
- Size, spacing, orientation and location of reinforcement shall be shown on the plan sheets.
- Reinforcement shall be identified by mark numbers inside a rectangle. Reinforcing bar marks shall be called out at least twice. The reinforcement including the spacing is called out in one view (such as a plan or elevation). The reinforcement without the spacing is called out again in at least one other view taken from a different angle (such as a section).
- Epoxy coating for reinforcement shall be shown in the plans by noting an E inside a triangle.

- The spacing for reinforcement shall be on a dimension line with extension lines. Do not point to a single bar and call out the spacing. Reinforcement spacing callouts shall include a distance. If the distance is an unusual number, give a maximum spacing. Do not use "equal spaces" as in, "23 equal spaces = 18′-9″ " (the steel workers should not have to calculate the spacing). Also, never use the word "about" as in, "23 spaces @ about 10″ = 18′-9″ "(this is open to too much interpretation). Instead these should read, "23 spaces @ 10″ max. = 18′-9″."
- Reinforcement geometry shall be clear in plan details. Congested areas, oddly bent bars, etc. can be clarified with additional views/details/sections or adjacent bending diagrams. In bending diagrams, reinforcement dimensions are given out-to-out. It may be necessary to show edges of reinforcement with two parallel edge lines to clearly show working points and dimensions.
- Reinforcement lengths, angles, etc. need not be called out when they can be determined from structural member sizes, cover requirements, etc. Anchorage, embedment and extension lengths of reinforcement shall be dimensioned in the plans.
- Standard hooks per AASHTO LRFD 5.10.2.1 need not be dimensioned or called out, but shall be drawn with the proper angle (90º, 135º or 180º). Seismic hooks per AASHTO LRFD 5.10.2.2 (used for transverse reinforcement in regions of expected plastic hinges) shall be called out on the plans whenever they are used.
- Splices in reinforcement are required when reinforcement lengths exceed the fabrication lengths in BDM 5.1.2.F. They may also be necessary in other locations such as construction joints, etc. The location, length and stagger of lap splices shall be shown on the plan sheets. Tables of applicable lap splice lengths are acceptable with associated stagger requirements. Type, location and stagger of mechanical and welded splices of reinforcement shall be shown.
- Where concrete cover requirements differ from those given in the standard notes or *Standard Specification* 6-02.3(24)C, they shall be shown in the plans. It shall be clear whether the cover requirement refers to ties and stirrups or the main longitudinal bars.
- Bar list sheets shall be prepared for plan sets including bridges. They shall be included at the end of each bridge plan set. They are not stamped. They are provided in the plans as a convenience for the Contractor and are to be used at their own risk. Despite this warning, Contractors sometimes use the bar list directly to fabricate reinforcement without confirming details from the plans. Designers should therefore strive for accuracy in the bar list. An accurate bar list also serves as a checking mechanism and a way to calculate reinforcement quantities.
- The reinforcing for some structural members such as approach slabs, shafts, piles, barrier, retaining walls, bridge grate inlets, sign structure foundations, precast SIP deck panels and precast girders are not shown in the bar list at the end of the bridge plan set but may include their own bar list on their plan sheets. These components typically have shop plans, include steel reinforcement within their unit costs and/or are constructed by separate sub-contractors.
- Other reinforcement detailing references include ACI 315-99 "Details and Detailing of Concrete Reinforcement", ACI 318-08 "Building Code Requirements for Structural Concrete", and CRSI "Manual of Standard Practice" May 2003.

11.1.2 Bridge Office Standard Drawings and Office Examples

A. **General**

- The Bridge Office provides standard drawings and example sheets of various common bridge elements.

B. **Use of Standards**

- The Standard Drawings are to be considered as nothing more than **examples** of items like girders or traffic barriers which are often used and are very similar from job to job.
- They are to be **copied** to a structure project and **modified to fit** the particular aspects of the structure. They are not intended to be included in a contract plan set without close scrutiny for applicability to the job.

C. **Changes to Standards**

- New standard drawings and revisions to existing drawings shall be approved by the Bridge Design Engineer and shall be made according to the same office practices as contract plan sheets.

11.1.3 Plan Sheets

Plan sheets should be assembled in the **order of construction** and include the items listed below. Phasing or large-scale projects may require more than one sheet to properly detail plan items.

- Layout
- Footing/Foundation Layout
- Abutment
- Pier/Bent
- Bearing Details
- Framing Plan
- Typical Section
- Girders
- Roadway Slab Reinforcement (Plan and transverse section)
- Expansion Joints (if needed)
- Traffic Barrier
- Approach Slab
- Barlist

A. **Layout**

- The Layout sheet shall contain, but is not limited to:
  - Plan View with ascending stations from left to right
  - Elevation View shown as an outside view of the bridge and shall be visually aligned with the plan view.
- The original preliminary plan will be copied to create the final layout. Views, data, and notes may be repositioned to improve the final product.
- Items on the preliminary plan, which should **not** appear on the final layout are as follows:
  - Typical roadway sections.
  - Vertical curve, Superelevation and curve data for other than the main line.
  - Other information that was preliminary or that will be found elsewhere in the plans.

- Items not normally found on the preliminary plan, which should be **added**:
  - **Test hole locations** (designated by $^{3}/_{16}$ inch circles, quartered) to plan view.
  - Elevation view of **footings**, **seals**, **piles**, etc. Show elevation at Bottom of footing and, if applicable, the type and size of piling.
  - **General notes** above legend on right hand side, usually in place of the typical section.
  - Title "LAYOUT" in the title block and sheet number in the space provided.
  - Other features, such as lighting, conduit, signs, excavation, riprap, etc. as determined by the designer.
- The preliminary plan checklist in Appendix A, Chapter 2 can be used for reference.

B. **Footing Layout**

- An abutment with a **spread footing** has a Footing Layout. An abutment with piles and pile cap has a Foundation Layout.
- The Footing Layout is a plan of the bridge whose details are limited to those needed to **locate the footings**. The intent of the footing layout is to minimize the possibility of error at this initial stage of construction.
- The Foundation Layout is a plan of the bridge whose details are limited to those needed to **locate the shafts or piles**. The intent of the Foundation layout is to minimize the possibility of error at this initial stage of construction.
- Other related information and/or details such as pedestal sizes, and column sizes are considered part of the pier drawing and **should not be included** in the footing layout.
- The Footing Layout should be shown on the layout sheet if space allows. It need not be in the same scale. When the general notes and footing layout cannot be included on the first (layout) sheet, the footing layout should be included on the second sheet.
- Longitudinally, footings should be located using the **survey line** to reference such items as the footing, centerline pier, centerline column, or centerline bearing, etc.
- When **seals** are required, their locations and sizes should be clearly indicated on the footing layout.
- The Wall Foundation Plan for retaining walls is similar to the Footing Plan for bridges except that it also shows dimensions to the front face of wall.
- Appendix 11.1-A4 is an example of a footing layout showing:
  - The basic information needed.
  - The method of detailing from the survey line.

C. **Abutment**

- Bridge elements that have not yet been built will not be shown. For example, the superstructure is not to be shown, dashed or not, on any substructure details.
- Elevation information for seals and piles or shafts may be shown on the abutment or pier sheets.
- Views are to be oriented so that they represent what the contractor or inspector would most likely see on the ground. Pier 1 elevation is often shown looking back on stationing. A note should be added under the Elevation Pier 1 title saying "Shown looking back on stationing".

D. **Pier/Bent**

- Each pier shall be detailed separately as a general rule. If the intermediate piers are identical except for height, then they can be shown together.

E. **Bearing Details**

F. **Framing Plan**
- Girder Lines must be identified in the plan view (Gir. A, Gir. B, etc.).

G. **Typical Section**
- Girder spacing, which is tied to the bridge construction baseline
- Roadway slab thickness, as well as web and bottom slab thicknesses for box girders
- "A" dimension
- Limits of pigmented sealer
- Profile grade and pivot point and cross slopes
- Utility locations
- Curb to curb roadway width
- Soffit and drip groove geometry

H. **Girders**
- Prestressed girder sheets can be copied from the Bridge Office library but they must be modified to match the project requirements.

I. **Roadway Slab Reinforcement**
- Plan and transverse section views

J. **Expansion Joints**

K. **Traffic Barrier**
- Traffic barrier sheets can be copied from the Bridge Office library but they must be modified to match the project requirements.

L. **Approach Slab**
- Approach slab sheets can be copied from the Bridge Office library and modified as necessary for the project.

M. **Barlist**
- The barlist sheets do not require stamping because they are not officially part of the contract plan set.

11.1.4 Electronic Plan Sharing Policy

The following procedure describes the Bridge Design Office or WSDOT consultants' electronic plan sharing policy with other WSDOT offices, consultants, contractors and other agencies:

Plan sheets prepared by the Bridge Design Office or WSDOT consultants may be electronically sent out to other WSDOT offices, consultants, contractors and other agencies in DWG format only if all of the following steps are taken:

1. Entire information in the title block is removed from the plan sheet.
2. A disclaimer reading "FOR INFORMATION ONLY" is printed diagonally across each plan sheet; and
3. A letter of disclaimer is sent as a cover or an attachment to the plan sheet(s), indicating that attached plans are for information only and that WSDOT has no responsibility for accuracy of the contents.

Bridge Office plan sheets may also be electronically shared if requested in PDF format. PDF files need to only include the disclaimer noted in Step 2 above. Examples of bridge plan sheets modified for electronic sharing are shown for clarity. Time spent modifying and submitting electronic plan sheets shall be charged to the job number provided by the construction PE's office.

This policy applies only to current projects under design or under contract. Historical or as-built plan sheets may only be shared in PDF format, and only if condition #3 is followed, as described above.

11.1.5 Structural Steel

A. **General**

- Flat pieces of steel are termed plates, bars, sheets or strips, depending on the dimensions.

B. **Bars**

- Up to 6 inches wide, 0.203 in. (3/16 inch) and over in thickness, or 6 inches to 8 inches wide, 0.230 in. (7/32 inch) and over in thickness.

C. **Plates**

- Over 8 inches wide, 0.230 in. (7/32 inch) and over in thickness, or over 48 inches wide, 0.180 in (11/64 inch) and over in thickness.

D. **Strips**

- Thinner pieces up to 12 inches wide are strips and over 12 inches are sheets. A complete table of classification may be found in the AISC Manual of Steel Construction, 8th Ed. Page 6-3.

E. **Labeling**

- The following table shows the usual method of labeling some of the most frequently used structural steel shapes. Note that the inches symbol (“) is omitted, but the foot symbol (‘) is used for length including lengths less than a foot.

PLATES	PL ½ x 34 x 5'-6 GROUP SYMBOL / THICKNESS IN INCHES / WIDTH IN INCHES / LENGTH IN FEET AND INCHES	ANGLES	L 6 x 5 x ¾ x 2'-1 GROUP SYMBOL / LONG LEG IN INCHES / SHORT LEG IN INCHES / THICKNESS IN INCHES / LENGTH IN FEET AND INCHES
FLAT BARS	BAR 2 x ¾ x 0'-6 GROUP SYMBOL / WIDTH IN INCHES / THICKNESS IN INCHES / LENGTH IN FEET AND INCHES	RECTANGULAR HSS	HSS 6 x 5 x ¼ x 3'-2 GROUP SYMBOL / WIDTH IN INCHES / WIDTH IN INCHES / WALL THICKNESS IN INCHES / LENGTH IN FEET AND INCHES
SQUARE BARS	BAR 2 □ x 3'-4 GROUP SYMBOL / SIZE IN INCHES / CONVENTION FOR "SQUARE" / LENGTH IN FEET AND INCHES	CIRCULAR HSS	HSS 3.000 x 0.250 x 2'-5 GROUP SYMBOL / OUTSIDE DIAM. IN INCHES / WALL THICKNESS IN INCHES / LENGTH IN FEET AND INCHES
ROUND BARS	BAR 2 ø x 0'-4 GROUP SYMBOL / SIZE IN INCHES / CONVENTION FOR "ROUND" / LENGTH IN FEET AND INCHES	PIPES	1½"ø STD PIPE NOMINAL DIAM. IN INCHES / DESIGNATION / GROUP SYMBOL

11.1.6 Aluminum Section Designations

The designations used in the tables are suggested for general use.

SECTION	DESIGNATION	EXAMPLE
I-Beams	I *DEPTH* × *WT*	14 × 3.28
Wide-Flange Sections	WF *DEPTH* × *WT*	WF4 × 4.76
Wide-Flange Sections, Army-Navy Series	WF(A-N) *DEPTH* × *WT*	WF(A-N)4 × 1.79
American Standard Channels	C *DEPTH* × *WT*	C4 × 1.85
Special Channels	CS DEPTH × WT	CS4 × 3.32
Wing Channels	CS(WING) *WIDTH* × *WT*	CS(WING)4 × 0.90
Army-Navy Channels	C(A-N) *DEPTH* × *WT*	C(A-N)4 × 1.58
Angles	L *LL* × *LL* × *TH*	L3 × 3 × 0.25
Square End Angles	LS *LL* × *LL* × *TH*	LS2 × 2 × 0.187
Bulb Angles	BULB L *LL1* × *LL2* × *TH1* × *TH2*	BULB L4 × 3.5 × 0.375 × 0.375
Bulb Angle, Army-Navy Series	BULB L(A-N) *LL1* × *LL2* × *TH1* × *TH2*	BULB L(A-N) 3 × 2 × 0.188 × 0.188
Tees	T *DEPTH* × *WIDTH* × *WT*	T4 × 4 × 3.43
Army-Navy Tees	T(A-N) *DEPTH* × *WIDTH* × *WT*	T(A-N)4 × 4 × 2.27
Zees	Z *DEPTH* × *WIDTH* × *WT*	Z4 × 3.06 × 2.85
Plates	PL *TH* × *WIDTH*	PL¼ × 8
Rods	RD *DIA*	RD 1
Square Bars	SQ *SDIM*	SQ 4
Rectangle Bars	RECT *TH* × *WIDTH*	RECT¼ × 4
Round Tubes	*ODIA OD* × *TH* WALL	4OD × 0.125 WALL
Square Tubes	*ODIM SQ* × *TH* WALL	3SQ × 0.219 WALL
Rectangle Tubes	*DEPTH* × *WIDTH RECT* × *TH* WALL	4 × 1.5 RECT × 0.104 WALL

WT - WEIGHT in LB/FT based on density of 0.098
TH - THICKNESS, LL - LEG LENGTH, DIA – DIAMETER
ODIA - OUTSIDE DIAMETER, ODIM - OUTSIDE DIMENSION
SDIM - SIDE DIMENSION

All lengths in inches

11.1.7 Abbreviations

A. **General**

- Abbreviations, as a rule, are to be **avoided**.
- Because different words sometimes have identical abbreviations, the word should be spelled out where the meaning may be in doubt.
- A few **standard signs** are in common use in the Bridge and Structures Office. These are listed with the abbreviations.
- A **period** should be placed after all abbreviations, except as listed below.
- **Apostrophes** are usually not used. Exceptions: pav't., req'd.
- Abbreviations for **plurals** are usually the same as the singular. Exceptions: figs., no., ctrs., pp.
- No abbreviations in titles.

B. **List of abbreviations commonly used on bridge plan sheets:**

A

abutment	ABUT.
adjust, adjacent	ADJ.
aggregate	AGG.
alternate	ALT.
ahead	AHD.
aluminum	AL.
American Society for Testing and Materials	ASTM
American Association of State Highway and Transportation Officials	AASHTO
and	&
angle point	A.P.
approved	APPRD.
approximate	APPROX.
area	A
asbestos cement pipe	ASB. CP
asphalt concrete	AC
asphalt treated base	ATB
at	@ (used only to indicate spacing or pricing, otherwise spell it out)
avenue	AVE.
average	AVG.

B

back	BK.
back of pavement seat	B.P.S.
bearing	BRG.
begin horizontal curve (Point of Curvature)	P.C.
begin vertical curve	BVC
bench mark	BM
between	BTWN.
bituminous surface treatment	BST
bottom	BOT.
boulevard	BLVD.
bridge	BR.
bridge drain	BR. DR.
building	BLDG.
buried cable	BC

C

cast-in-place	CIP
cast iron pipe	(C.I.P.)
center, centers	CTR., CTRS.
centerline	℄
center of gravity	CG
center to center	CTR. TO CTR., C/C
Celsius (formerly Centigrade)	C
cement treated base	CTB
centimeters	CM.
class	CL.
clearance, clear	CLR.
compression, compressive	COMP.
column	COL.

concrete	CONC.
conduit	COND.
concrete pavement	PCCP (Portland Cement Concrete Pavement)
construction	CONST. or CONSTR.
continuous	CONT. or CONTIN.
corrugated	CORR.
corrugated metal	CM
corrugated steel pipe	CSP
countersink	CSK.
county	CO.
creek	CR.
cross beam	X-BM.
crossing	XING
cross section	X-SECT.
cubic feet	CF or CU. FT. or $FT.^3$
cubic inch	CU. IN. or $IN.^3$
cubic yard	CY or CU. YD. or YD^3
culvert	CULV.

D

degrees, angular	° or DEG.
degrees, thermal	C or F
diagonals(s)	DIAG.
diameter	DIAM. or ø
diaphragm	DIAPH.
dimension	DIM.
double	DBL.
drive	DR.

E

each	EA.
each face	E.F.
easement	EASE., ESMT.
East	E.
edge of pavement	EP
edge of shoulder	ES
endwall	EW
electric	ELECT
elevation	EL. or ELEV.
embankment	EMB.
end horizontal curve (Point of Tangency)	P.T.
end vertical curve	EVC
Engineer	ENGR.
equal(s) or = (mathematical result)	EQ. (as in eq. spaces)
estimate(d)	EST.
excavation	EXC.
excluding	EXCL.
expansion	EXP., EXPAN.
existing	EXIST.
exterior	EXT.

F	
Fahrenheit	F
far face	F.F.
far side	F.S.
feet (foot)	FT. or ’
feet per foot	FT./FT. or ’/’ or ’/FT.
field splice	F.S.
figure, figures	FIG., FIGS.
flat head	F.H.
foot kips	FT-KIPS
foot pounds	FT-LB
footing	FTG.
forward	FWD.
freeway	FWY.
G	
gallon(s)	GAL.
galvanized	GALV.
galvanized steel pipe	GSP
gauge	GA.
General Special Provisions	GSP
girder	GIR.
ground	GR.
guard railing	GR
H	
hanger	HGR.
height	HT.
height (retaining wall)	H
hexagonal	HEX.
high strength	H.S.
high water	H.W.
high water mark	H.W.M.
highway	HWY.
horizontal	HORIZ.
hot mix asphalt	HMA
hour(s)	HR.
hundred(s)	HUND.
I	
included, including	INCL.
inche(s)	IN. or “
inside diameter	I.D.
inside face	I.F.
interior	INT.
intermediate	INTERM.
interstate	I
invert	INV.
J	
joint	JT.
junction	JCT.
K	
kilometer(s)	KM.
kilopounds	KIPS, K.

L	
layout	LO
left	LT.
length of curve	L.C.
linear feet	L.F.
longitudinal	LONGIT.
lump sum	L.S.
M	
maintenance	MAINT.
malleable	MALL.
manhole	MH
manufacturer	MFR.
maximum	MAX.
mean high water	MHW
mean higher high water	MHHW
mean low water	MLW
mean lower low water	MLLW
meters	M.
mile(s)	MI.
miles per hour	MPH
millimeters	MM.
minimum	MIN.
minute(s)	MIN. or ‘
miscellaneous	MISC.
modified	MOD.
monument	MON.
N	
National Geodetic Vertical Datum 1929	NGVD 29
near face	N.F.
near side	N.S.
North	N.
North American Vertical Datum 1988	NAVD 88
Northbound	NB
not to scale	NTS
number; numbers	#, NO., NOS.
O	
or	/
original ground	O.G.
ounce(s)	OZ.
outside diameter	O.D.
outside face	O.F.
out to out	O to O
overcrossing	O-XING
overhead	OH
P	
page; pages	P.; PP.
pavement	PAV’T
pedestrian	PED.
per cent	%
pivot point	PP
Plans, Specifications and Estimates	PS&E
plate	PL or PL

point	PT.
point of compound curve	PCC
point of curvature	P.C.
point of intersection	P.I.
point of reverse curve	PRC
point of tangency	P.T.
point on vertical curve	PVC
point on horizontal curve	POC
point on tangent	POT
polyvinyl chloride	PVC
portland cement concrete	PCC
pound, pounds	LB., LBS., #
pounds per square foot	PSF, LBS./FT.^{2}, LBS./ ‘,or #/’
pounds per square inch	PSI, LBS./IN.^{2}, LBS./ “,or #/”
power pole	PP
precast	P.C.
pressure	PRES.
prestressed	P.S.
prestressed concrete pipe	P.C.P.
Puget Sound Power and Light	P.S.P.&L.
Q	
quantity	QUANT.
quart	QT.
R	
radius	R.
railroad	RR
railway	RWY.
Range	R.
regulator	REG.
reinforced, reinforcing	REINF.
reinforced concrete	RC
reinforced concrete box	RCB
reinforced concrete pipe	RCP
required	REQ’D
retaining wall	RET. WALL
revised (date)	REV.
right	RT.
right of way	R/W
road	RD.
roadway	RDWY.
route	RTE.
S	
seconds	SEC. or “
Section (map location)	SEC.
Section (of drawing)	SECT.
sheet	SHT.
shoulder	SHLD. or SH.
sidewalk	SW. or SDWK
South	S.
southbound	SB
space(s)	SPA.
splice	SPL.

specification	SPEC.
square foot (feet)	SQ. FT. or FT.²
square inch	SQ. IN. or IN.²
square yard	SY, SQ. YD. or YD.²
station	STA.
standard	STD.
state route	SR
stiffener	STIFF.
stirrup	STIRR.
structure, structural	STR.
support	SUPP.
surface, surfacing	SURF.
symmetrical	SYMM.
T	
tangent	TAN. or T.
telephone	TEL.
temporary	TEMP.
test hole	T.H.
thick(ness)	TH.
thousand	M
thousand (feet) board measure	MBM
ton(s)	T.
total	TOT.
township	T.
transition	TRANS.
transportation	TRANSP.
transverse	TRANSV.
treatment	TR.
typical	TYP.
U	
ultimate	ULT.
undercrossing	U-XING
V	
variable, varies	VAR.
vertical	VERT.
vertical curve	V.C.
vitrified clay pipe	VCP
volume	VOL. or V
W	
water surface	W.S.
weight(s)	WT.
welded steel pipe	WSP
welded wire fabric	W.W.F.
West	W.
Willamette Meridian	W.M.
wingwall	W.W.
with	W/
without	W/O
Y	
yard, yards	YD., YDS.
year(s)	YR.

Appendix 11.1-A1

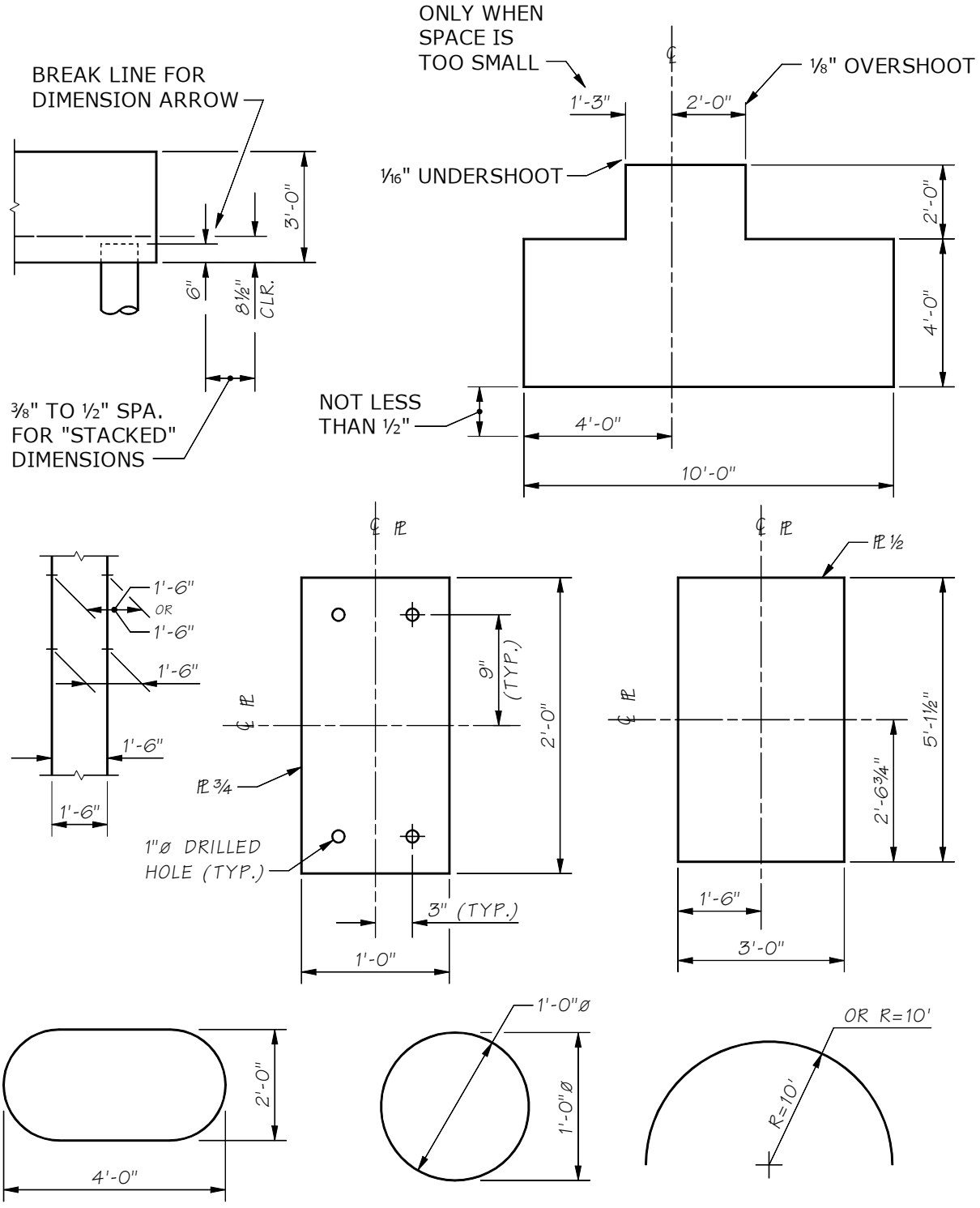

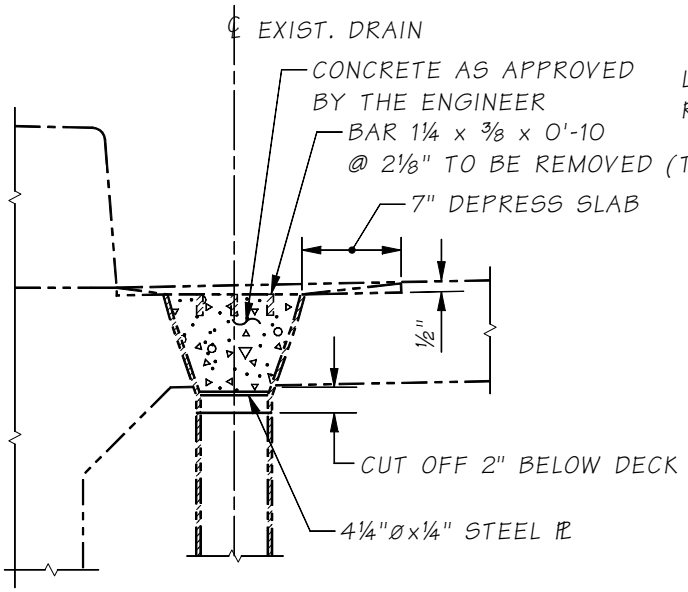

TYPICAL CONCRETE DETAIL

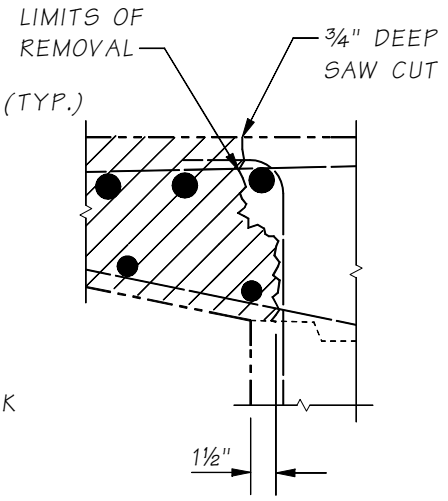

TYPICAL REMOVAL DETAIL

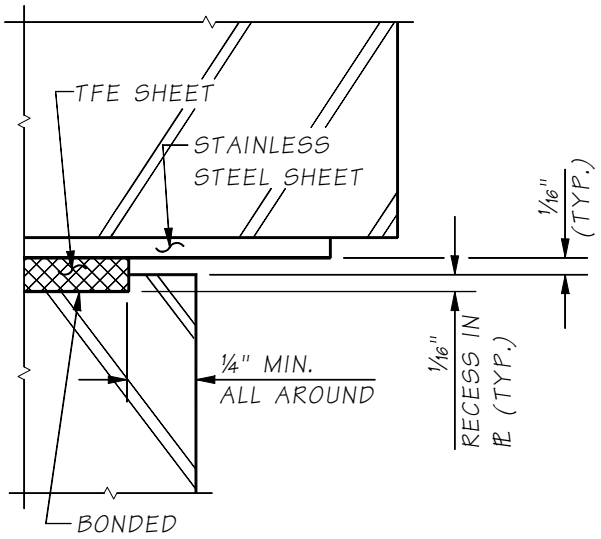

TYPICAL STEEL DETAIL

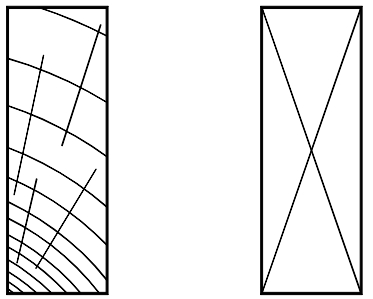

TYPICAL TIMBER DETAIL

Appendix 11.1-A3

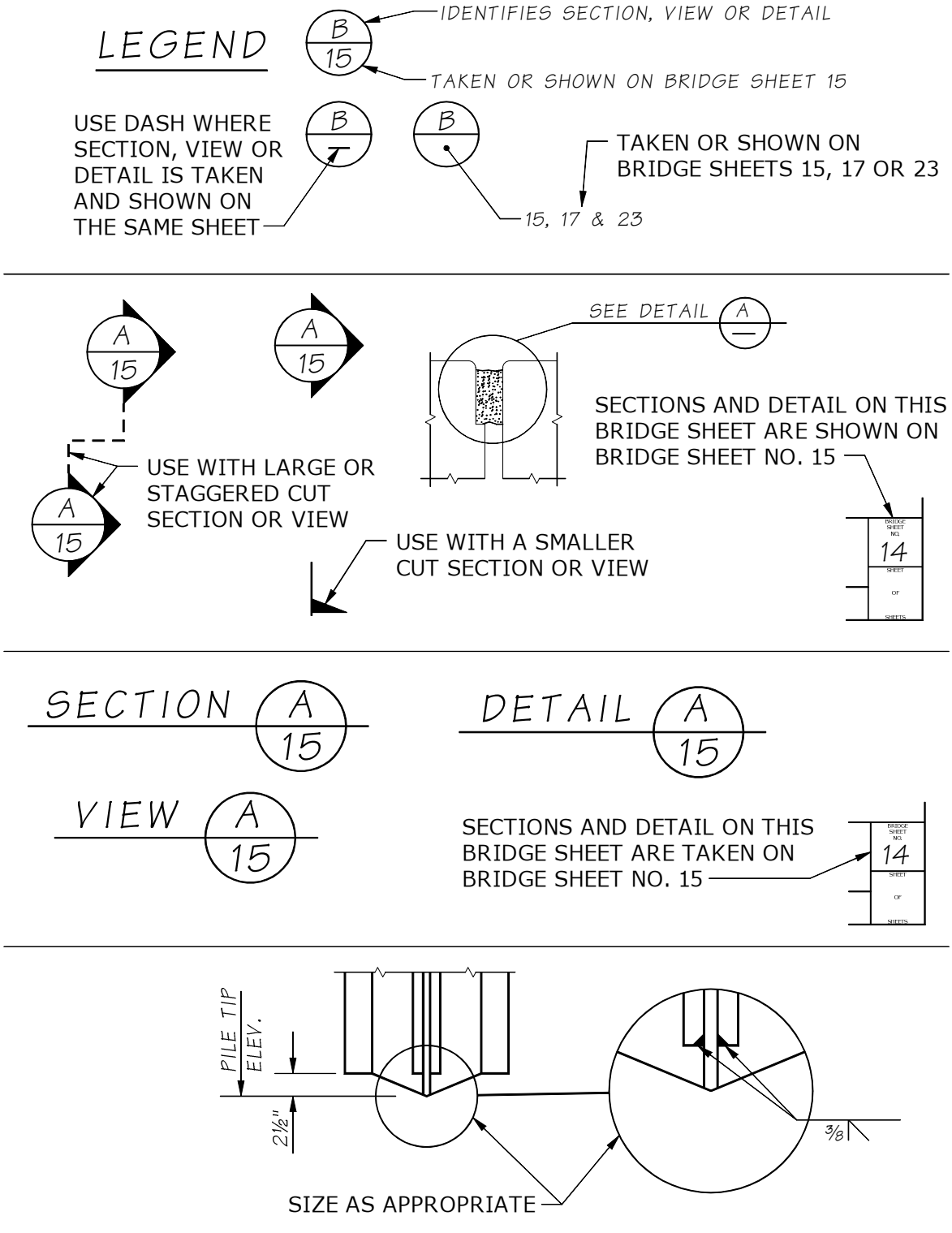

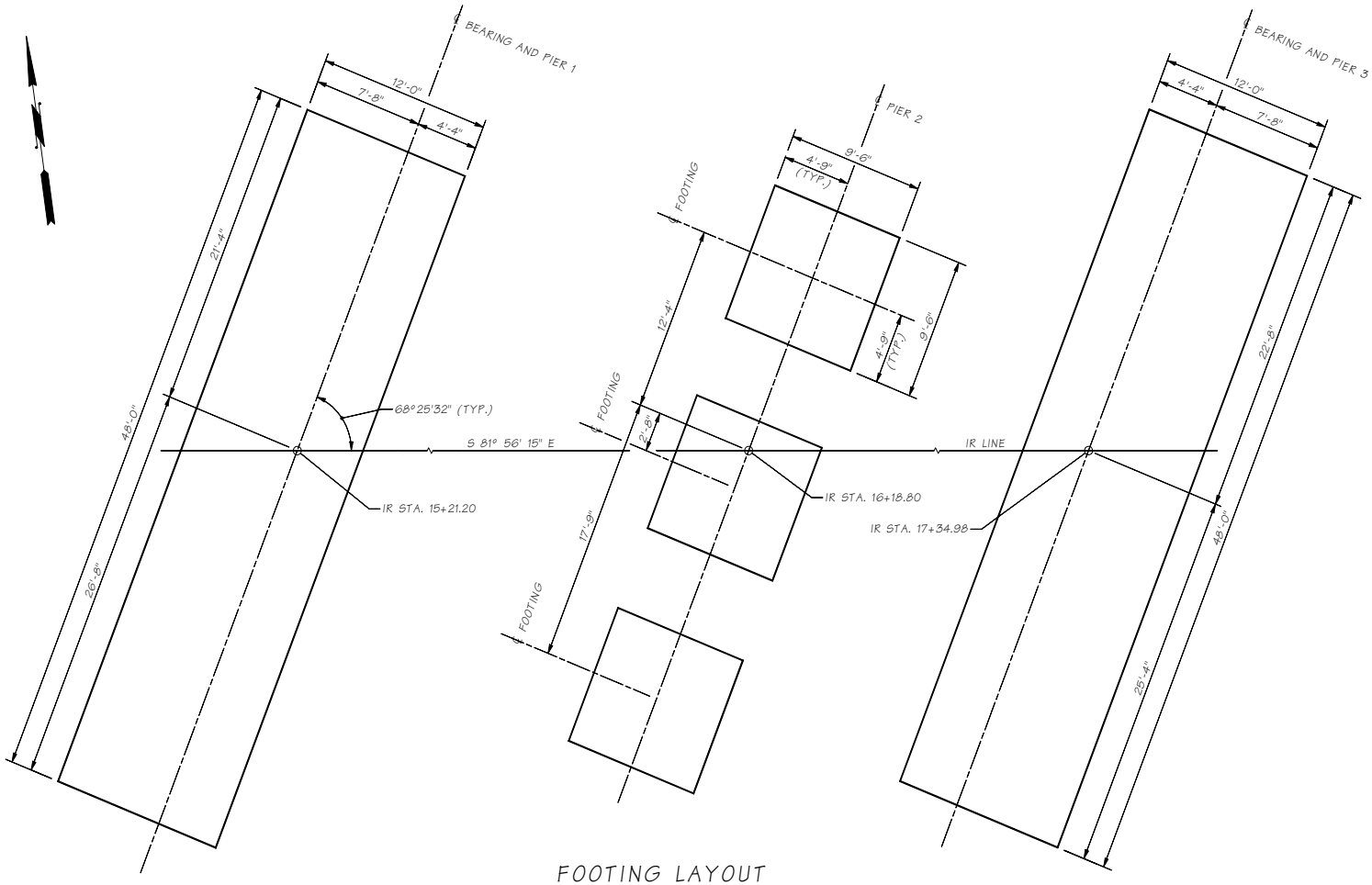

FOOTING LAYOUT

Figure 11.1-A4-1

Bridge Design Engr.					REGION NO.	STATE	FED. AID PROJ. NO.	SHEET NO.	TOTAL SHEETS	BRIDGE AND STRUCTURES OFFICE
Supervisor					10	WASH				Washington State Department of Transportation
Designed By					JOB NUMBER					FOOTING LAYOUT
Checked By										BRIDGE SHEET NO.
Detailed By										SHEET OF SHEETS
Bridge Projects Engr.										
Prelim Plan By										
Architect/Specialist	DATE	REVISION	BY	APPD						

SR _____ JOB NO. _____ SHEET _____

Chapter 12 Quantities, Costs, and Specifications Contents

12.1 Quantities - General 12.1-1
12.1.1 Cost Estimating Quantities 12.1-1
12.1.2 Not Included in Bridge Quantities List 12.1-1

12.2 Computation of Quantities 12.2-1
12.2.1 Responsibilities 12.2-1
12.2.2 Procedure for Computation 12.2-1
12.2.3 Data Source 12.2-1
12.2.4 Accuracy 12.2-2
12.2.5 Excavation 12.2-2
12.2.6 Shoring or Extra Excavation, Class A 12.2-5
12.2.7 Piling 12.2-7
12.2.8 Conduit Pipe 12.2-7
12.2.9 Private Utilities Attached To Bridge Structures 12.2-8
12.2.10 Drilled Shafts 12.2-8

12.3 Construction Costs 12.3-1
12.3.1 Introduction 12.3-1
12.3.2 Factors Affecting Costs 12.3-1
12.3.3 Development of Cost Estimates 12.3-2

12.4 Construction Specifications and Estimates 12.4-1
12.4.1 General 12.4-1
12.4.2 Definitions 12.4-1
12.4.3 General Bridge S&E Process 12.4-1
12.4.4 Reviewing Bridge Plans 12.4-2
12.4.5 Preparing the Bridge Cost Estimates 12.4-3
12.4.6 Preparing the Bridge Specifications 12.4-4
12.4.7 Preparing the Bridge Working Day Schedule 12.4-5
12.4.8 Reviewing Projects Prepared by Consultants 12.4-6
12.4.9 Submitting the PS&E Package 12.4-6
12.4.10 PS&E Review Period and Turn-in for AD Copy 12.4-7

Appendix 12.1-A1 Not Included In Bridge Quantities List 12.1-A1-1
Appendix 12.2-A1 Bridge Quantities 12.2-A1-1
Appendix 12.3-A1 Structural Estimating Aids Construction Costs 12.3-A1-1
Appendix 12.3-A2 Structural Estimating Aids Construction Costs 12.3-A2-1
Appendix 12.3-A3 Structural Estimating Aids Construction Costs 12.3-A3-1
Appendix 12.3-A4 Structural Estimating Aids Construction Costs 12.3-A4-1
Appendix 12.4-A1 Special Provisions Checklist 12.4-A1-1
Appendix 12.4-A2 Structural Estimating Aids Construction Time Rates 12.4-A2-1
Appendix 12.3-B1 Cost Estimate Summary 12.3-B1-1
Appendix 12.4-B1 Construction Working Day Schedule 12.4-B1-1

Chapter 12 Quantities, Costs, and Specifications

12.1 Quantities - General

The quantities of the various materials and work items involved in the construction of a project that includes bridges and structures are needed for establishing the estimated cost of the project throughout the design process, and for establishing a basis for comparison of the contractor's bids.

12.1.1 Cost Estimating Quantities

Quantities for establishing cost estimates are often necessary during various stages of project development and are required at the completion of the Bridge PS&E. These quantities should be calculated from the best information available at the time, see Section 12.2.3. The policy regarding the preparation of quantity calculations is as follows:

A. **Conceptual Stage –** During the conceptual stage of a project, estimated quantities may be required to arrive at an estimated cost. The need for conceptual stage quantities will be determined by the Bridge Projects Unit.

B. **Preliminary Plan Stage –** Upon completion of the preliminary plan, estimated quantities may be required to arrive at an estimated cost. The need for preliminary plan stage quantities will be determined by the Bridge Projects Unit.

C. **Design Stage –** If requested, quantity calculations shall be made, reviewed, and submitted to the Bridge Projects Unit by the Bridge Design Unit as the design progresses. The first submittal of estimated quantities shall be made as soon as the major dimensions of the structure are determined. As refinements in the design are made, quantities varying more than 10 percent from those previously submitted shall be resubmitted.

D. **Final Contract Quantities –** Upon completion of structural design and plans, the quantities of materials and work items involved in the construction of the project shall be computed,. See Sections 12.2.2 and 12.2.4.B.

12.1.2 Not Included in Bridge Quantities List

Items of work which appear in the bridge plan sheets, but for which details, specifications, and quantities are not included in the Bridge PS&E, shall be listed in the "Not Included in Bridge Quantities List" (WSDOT Form 230-038 and Appendix 12.1-A1). This list is required for every bridge, even if no items of work are shown in the Plans that are in this category. (In this case, fill out the bridge information at the top of the form and write "NONE" across the form.) This form is transmitted to the Region Design PE Office with all Preliminary Plan submittals, all Bridge PS&E distributions, and at various milestone points during the design process, to ensure that the responsibility for all PS&E items is clear. Particular care shall be taken in the preparation of this list as omissions can result in an incomplete project PS&E with missing information for work items, or conflicting overlapping information for work items.

12.2 Computation of Quantities

12.2.1 Responsibilities

A. **Design Unit –** The Design Unit is responsible for calculating quantities required for cost estimates for Preliminary Plans prepared in Design Units, calculating preliminary quantities at various milestones during the design process, and calculating quantities for the final Bridge PS&E. The Design Unit is responsible for notifying the Region Design PE Office and the Bridge Projects Unit whenever structural design changes and alterations are made to the design features and quantities which affect the cost of the structure, especially following the distribution of the initial Preliminary Plan.

B. **Bridge Projects Unit –** The Bridge Projects Unit is responsible for computing quantities for conceptual stage cost estimates, and cost estimates for Preliminary Plans prepared in the Bridge Projects Unit. The Bridge Projects Unit is responsible for ensuring that the quantities listed in the AD Copy Bid Proposal correspond to those received from the Design Unit.

12.2.2 Procedure for Computation

Quantities are to be computed and checked independently. The designer/originator and checker shall separately summarize their calculated quantities on the Bridge Quantities Form 230-031 (See Appendix 12.2-A1) in the units shown thereon. The two summaries shall be submitted to the Design Unit Supervisor for comparison. The designer/originator and checker shall use identical breakdowns for each quantity. For example, the designer/originator's quantities for excavation for each of Piers 1, 2, and 3 should be compared separately against the corresponding quantities made by the checker.

When the desired accuracy is achieved, a Supervisor's Bridge Quantities form shall be prepared and submitted to the Bridge Projects Unit along with the Pre-Contract Review Bridge Plans review set. (This form is the same as previously mentioned except that it is labeled "Supervisor's Bridge Quantities" and is completed by the unit supervisor or designee. If the unit supervisor elects, the designer/originator's or the checker's Bridge Quantities form may be designated as "Supervisor's Bridge Quantities.") This form is used by the Bridge Projects Unit to prepare the final bridge cost estimate.

All quantity calculations and bridge quantities forms are to be filed in the job file for the structure or the PS&E file for the project. All subsequent revisions shall be handled in the same manner as the original quantities. On the "Bridge Quantities" form, any revision to the original figure should not be erased but crossed out and replaced by the new figure using a different colored pencil. If there are too many revisions, the old summary sheet should be marked void, left in the file, and a new sheet made out, marked "Revised," dated, and the original forwarded to the Bridge Projects Unit.

Mistakes in quantities can be very costly to Contracting Agency. The designer/originator and checker must account for all items of work on the "Bridge Quantities" form, and must also be careful to enter an item of work only once (e.g., concrete or steel rebar in the superstructure should not be entered both in the lump sum superstructure breakdown and in the unit bid item quantity).

12.2.3 Data Source

Quantities of materials for use in preliminary cost estimates can often be obtained from the quantities calculated for previous similar designs. This information is available from the Bridge Projects Unit.

12.2.4 Accuracy

A. **Preliminary Quantities –** Quantities used for cost estimates prepared during the conceptual stage of the design are expected to have an accuracy of + 10 percent. The first iteration of quantities, after the preliminary plan has been completed, is expected to have an accuracy of + 5 percent.

B. **Final Quantities –** Final quantities in the Bridge PS&E submittal, including bar list quantities, to be listed in the Special Provisions and Bid Proposal sheet of the AD Copy, are to be calculated to have an accuracy of + 1 percent.

12.2.5 Excavation

A. **Structure Excavation, Class A –** Excavation necessary for the construction of bridge piers and reinforced concrete retaining walls is classified as Structure Excavation, Class A (see the definition as specified in *Standard Specification* Section 2-09.3(2)). Payment for such excavation is generally by volume measurement. The quantity of excavation to be paid for is measured as specified in *Standard Specification* Section 2-09.4, and computation of this quantity shall conform to these specifications. If the construction circumstances for the project require structure excavation limits that do not conform to the *Standard Specification* definition, then the modified structure excavation limits shall be shown in details in the Plans.

Structure excavation for footings and seals shall be computed using a horizontal limit of 1 foot 0 inches outside and parallel to the neat lines of the footing or seal or as shown in the Plans. The upper limit shall be the ground surface or stream bed as it exists at the time the excavation is started. See Figure 12.2.5-1(A), (B), and (C).

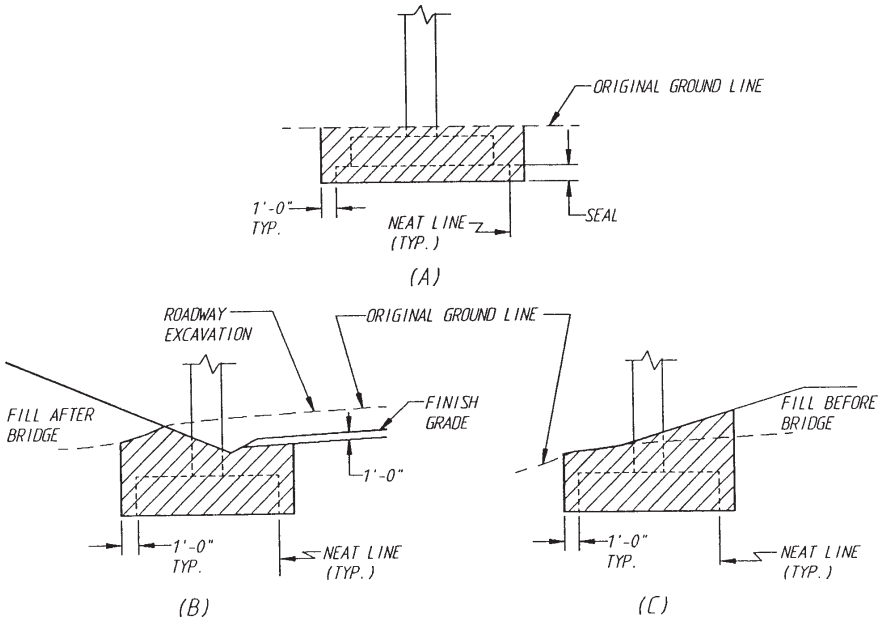

Figure 12.2.5-1

Structure excavation for the construction of wing walls shall be computed using limits shown in Figure 12.2.5-2.

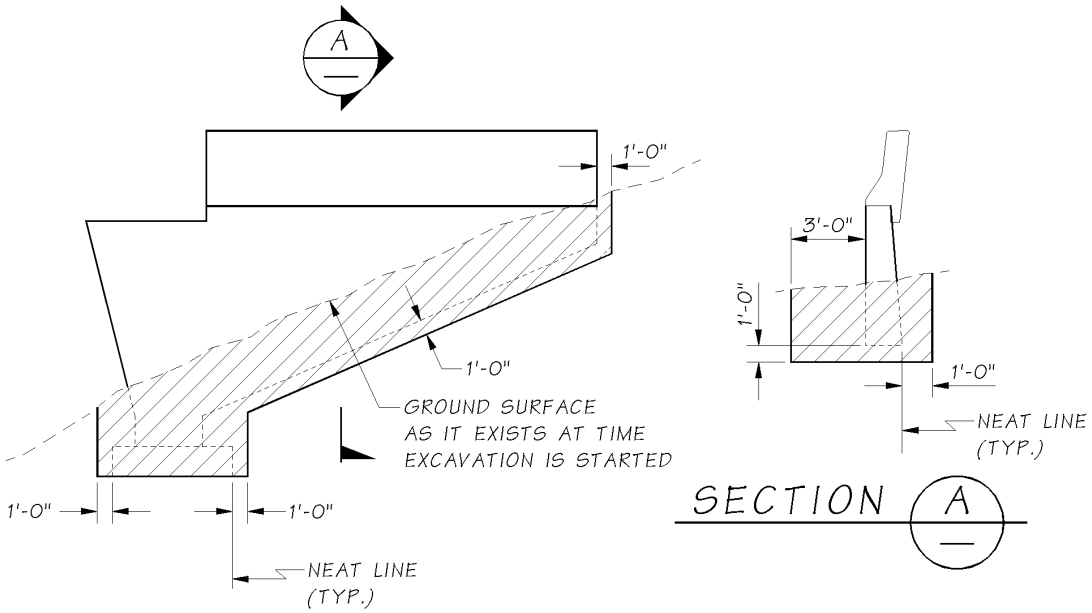

Figure 12.2.5-2

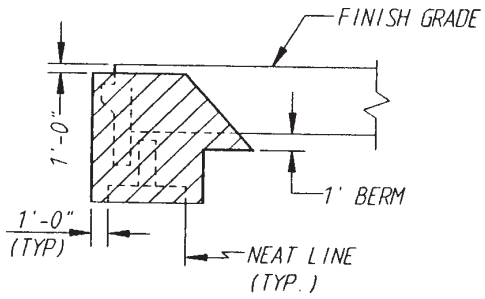

Figure 12.2.5-3

When bridge approach fills are to be constructed in the same contract as the bridge, and the foundation conditions do not require full height fills to be placed prior to the construction of the pier, the approach fill is constructed in two stages, i.e., constructed up to the bottom of footing or 1 foot above the bottom of footing, and then completed after the bridge construction. (The Materials Laboratory Geotechnical Services Branch shall be consulted on the staging method.) The structure excavation shall be computed from the top of the first stage fill.

The bottom of a spread footing will be placed 1 foot 0 inches below the top of the first stage fill. See Figure 12.2.5-4(A). The bottom of footings supported on piling will be placed at the top of the first stage fill; therefore no structure excavation is required (see Figure 12.2.5-4(B)).

The limits for stage fills shall be shown in the Plans with the structure excavation, if any.

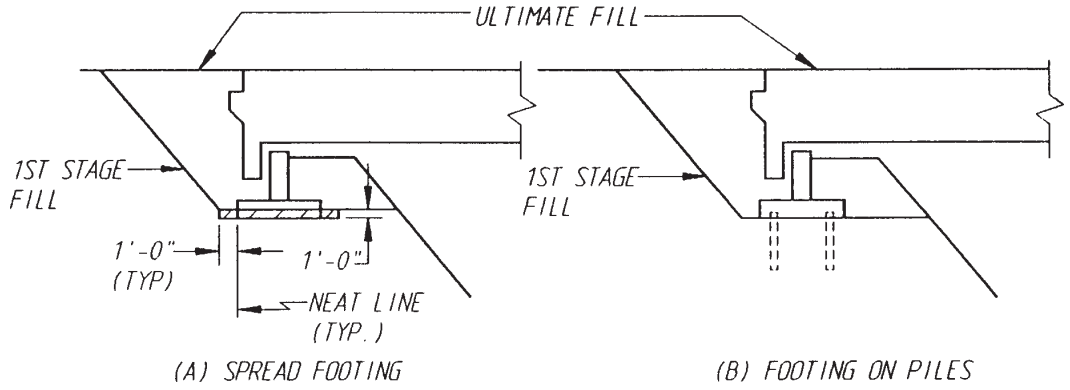

Figure 12.2.5-4

Prior to pier construction, when (1) a full height fill with or without surcharge is required for settlement, or (2) the original ground line is above the finish grade line, the upper limit of structure excavation shall be computed to 1 foot 0 inches below the finish grade (pavement) line (see Figure 12.2.5-5).

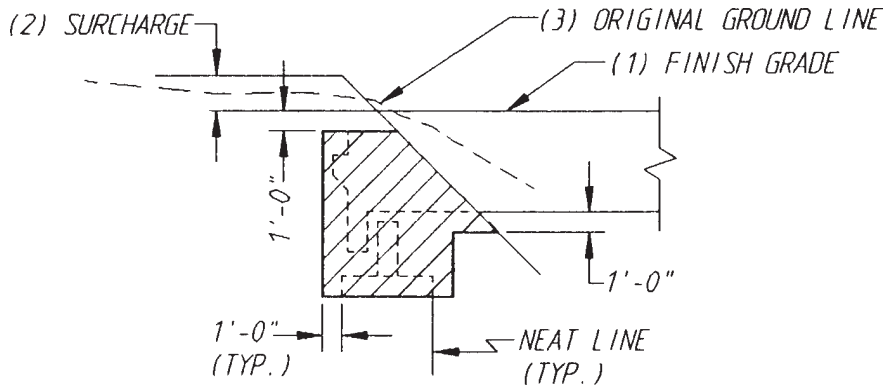

Figure 12.2.5-5

B. **Special Excavation –** The excavation necessary for placement of riprap around bridge piers is called Special Excavation (see Figure 12.2.5-6).

Special excavation shall be computed from the top of the seal to the existing stream bed or ground line along the slopes indicated in the Plans. Special excavation will only include excavation outside the limits of structure excavation.

The limits for special excavation shall be shown in the Plans.

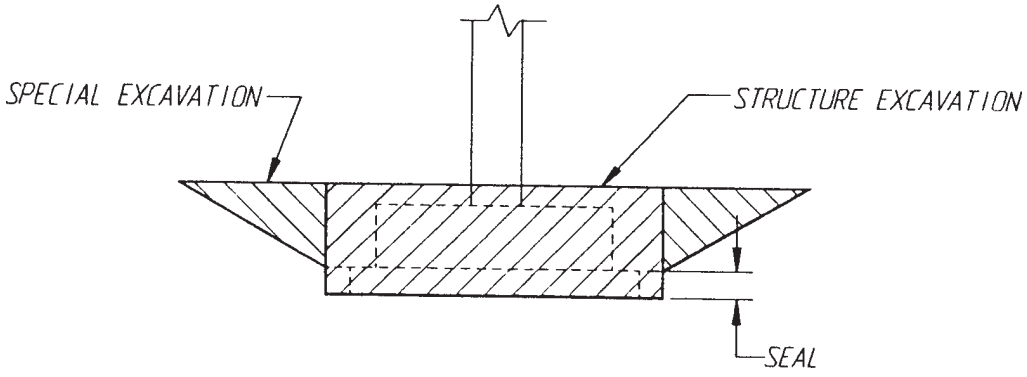

Figure 12.2.5-6

C. **Shaft Excavation –** Excavation necessary for the construction of shaft foundations is measured by volume and paid for at the unit contract price per cubic yard or cubic meter for "Soil Excavation For Shaft Including Haul."

The usual limits for computing shaft excavation shall be the neat lines of the shaft diameter as shown in the Plans, the bottom elevation of the shaft as shown in the Plans, and the top of the ground surface, defined as the highest existing ground point as shown in the Plans within the shaft diameter.

The methods of measurement and payment and the limits for shaft excavation shall be specified in the Special Provisions.

12.2.6 Shoring or Extra Excavation, Class A

Shoring, cofferdams or caissons, or extra excavation required for construction of bridge footings and reinforced concrete retaining walls constructed in the wet or dry is classified as Shoring or Extra Excavation, Class A. See *Standard Specification* Section 2-09.3(3).

Structural shoring (for dry excavation) or cofferdams (for wet excavation) is required for all excavations near completed structures (foundations of bridges, walls, or buildings), near underground utilities, near railroad tracks, and near pavement. All other excavation four feet or more in depth shall be either shored with structural shoring or cofferdams, or shall meet the open-pit excavation requirements as specified in *Standard Specification* Section 2-09.3(3)B.

For the purpose of estimating the cost for shoring or extra excavation, Class A, it is necessary to compute the peripheral area of an assumed sheet pile enclosure of the excavated area.

While payment for Shoring or Extra Excavation, Class A, is made at a lump sum contract price, the costs are a function of the overall height of excavation. In general, each side of the excavation for each pier shall be categorized into an average overall height range as shown on WSDOT Form 230-031 (i.e., less than 6 feet, 6 to 10 feet, 10 to 20 feet, or greater than 20 feet), the area for the side computed using the appropriate width times the average overall height, the overall area for the side shall be entered in the category that matches the side's average overall height. These calculations are required for each pier of the bridge as applicable. See accompanying Figure 12.2.6-1 and sample calculation.

For excavation in the dry, the peripheral area shall be the perimeter of the horizontal limits of structure excavation times the height from the bottom of the footing to the ground surface at the time of excavation.

For excavation in water, the peripheral area shall be the perimeter of the horizontal limits of structure excavation times the height from the bottom of the seal to 2 feet above the seal vent elevation.

For shaft-type excavations, it is not normally necessary to compute the area for shoring because the shoring is usually accommodated by the work items for permanent casing, temporary casing, and casing shoring.

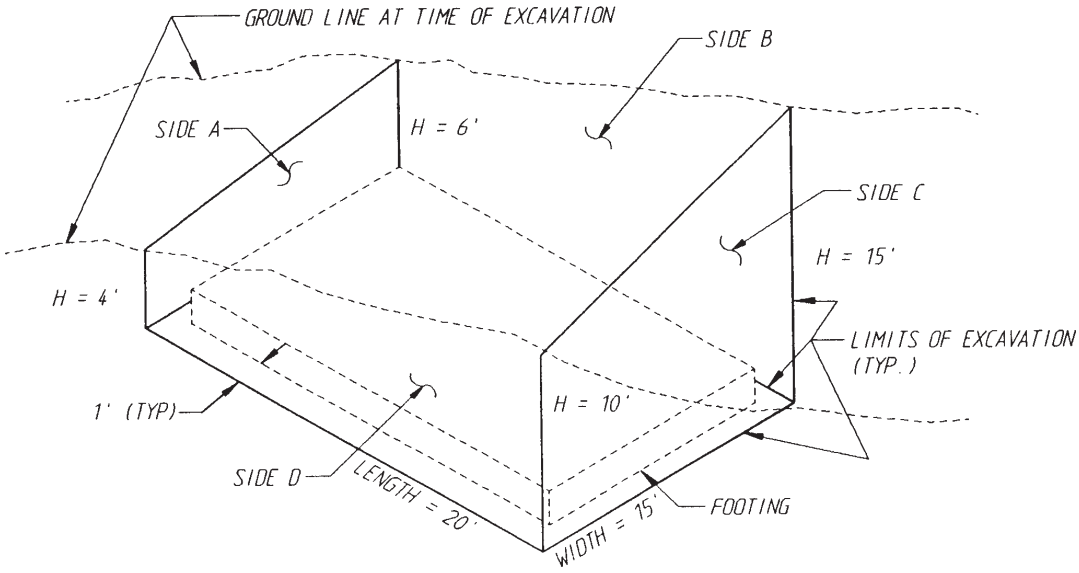

Figure 12.2.6-1

Sample Calculation:

For this pier (Figure 12.2.6-1):

Side A: average height = (4 + 6)/2 = 5 feet
width = 15 feet
area = 5 X 15 = 75 square feet

Side B: average height = (6 + 15)/2 = 10.5 feet
width = 20 feet
area = 10.5 X 20 = 210 square feet

Side C: average height = (10 + 15)/2 = 12.5 feet
width = 15 feet
area = 12.5 X 15 = 187.5 square feet

Side D: average height = (4 + 10)/2 = 7 feet
width = 20 feet
area = 7 X 20 = 140 square feet

For this example

Height Category	*Area*
less than 6 feet	75 square feet
6 feet to 10 feet	140 square feet
10 feet to 20 feet	210 + 188 = 398 square feet
greater than 20 feet	N.A.

These numbers would be entered on WSDOT Form 230-031 as follows:

Std. Item No. 4012	**Item Use** Std. Item		**Item Description** Shoring or Extra Excavation, Class A Dry: Average Overall Height		**Quant.** (Enter Total for Bridge Here)		**Unit of Meas.** L.S.	
Pier	6 ft.		6 ft. to 10 ft.		10 ft.* to 20 ft.		20 ft.	S.F.
Example	75	S.F.	140	S.F.	398 (11.5*) S.F.	S.F.	—	S.F.
		S.F.		S.F.		S.F.		S.F.
		S.F.		S.F.		S.F.		S.F.
		S.F.		S.F.		S.F.		S.F.

* Indicate Average Height

12.2.7 Piling

The piling quantities are to be measured and paid for in accordance with *Standard Specification* Sections 6-05.4 and 6-05.5. Computation of piling quantities shall follow the same provisions.

Timber test piles are driven outside the structure limits and are extra or additional piling beyond the required number of production piling. See *Standard Specification* Section 6-05.3(10).

Concrete or steel test piles are driven within the structure limits and take the place of production piling. In this case, the quantities for number and length of production piling is reduced by the number and length of test piling.

The quantity for "Furnishing _____ Piling _____" is the linear measurement of production piling below cut-off to the "estimated" pile tip (not "minimum" tip) specified in the Geotechnical report. (Does not include test piles.)

The quantity for "Driving _____ Pile _____" is the number of production piling driven. (Does not include test piles.)

Pile tips are required if so specified in the Geotechnical report. The tips on the test piles are incidental to the test pile; therefore, the number of pile tips reported on the Bridge Quantities Form 230-031 should not include the number of pile tips required on the test piles.

12.2.8 Conduit Pipe

It is WSDOT practice to embed two 2-inch diameter conduit pipes in all exterior concrete barriers constructed on bridges and retaining walls. The only exceptions to this practice are inside barriers of side-by-side twin bridges, and other project specific locations with the approval of the Bridge Design Engineer. Only WSDOT electrical systems may use these conduit pipes. Conduit pipes for other private utilities cannot be embedded in structure elements, and must be otherwise suspended or attached to the structure, in accordance with the franchise lease agreement negotiated between the private utility and the Region's Utility Engineer.

In accordance with *Standard Specification* Section 8-20.1(1) and RCW 19.28.161, conduit pipe installation work is considered electrical work that can only be performed by licensed electricians. As such, conduit pipe quantities can only be included in electrical work bid items, such as electrical lump sum bid items for "Illumination System", "Traffic Signal System", and "Communication System", or stand-alone unit contract bid items for "Conduit Pipe 2 In. Diam." Conduit pipe quantities **cannot** be made incidental to structural bid items such as "Superstructure", "Traffic Barrier", "Pedestrian Barrier", etc.

For bridges and retaining walls in projects that also include other electrical system work for illumination, traffic signals, and ITS systems, the conduit pipes and their associated junction boxes shall be included in the lump sum bid item cost estimates for the appropriate electrical system lump sum bid item.

For bridge and retaining walls in projects without any electrical system work (e.g., the conduit pipes are isolated and will exist initially as spares), the conduit pipe quantity shall be calculated for "Conduit Pipe 2 In. Diam", per linear foot. The measurement shall be the sum of all conduit pipe through the barriers and into the ground mounted junction boxes buried off the ends of the bridge corners as shown in the traffic barrier standard details. Each conduit pipe shall terminate in a separate junction box as shown in these details.

12.2.9 Private Utilities Attached To Bridge Structures

As mentioned above, conduit pipes for private utilities cannot be embedded in structure elements, and must be otherwise suspended or attached to the structure, in accordance with the franchise lease agreement negotiated between the private utility and the Region's Utility Engineer.

Because attachment of private utilities to bridge structures are subject to franchise lease agreements, the construction costs for furnishing and installing these utilities, including all associated supports, need to be kept separate from other bid items. The only portion of the utilities and their supports that can be made incidental to structure bid items, such as "Superstructure" and "Bridge Deck" are the concrete inserts cast into the deck slab of the bridge. All other quantities for the private utilities, including the support rods, braces, and conduit pipes, shall be included in the associated bid item(s) established for each separate private utility, whether as a lump sum bid item, or measured by linear measurement. These separate bid item(s) for these private utilities are the responsibility of the Design PE Office.

The same practice applies to WSDOT conduit pipes when such conduit pipes for ITS or other systems are suspended or attached to the structure. Other than the concrete inserts for support of such WSDOT conduit pipes, all other quantities for external WSDOT conduit pipe systems shall be included in the appropriate WSDOT electrical system lump sum bid item, under the responsibility of the Design PE Office or the Region Traffic Design Office.

12.2.10 Drilled Shafts

Soil excavation for shaft including haul is measured by the cubic yards of shaft excavated. The cubic yards shall be calculated based on the shaft diameter shown in the Plans, the top of shaft soil excavation, as defined below, and the bottom elevation shown in the plans, less all rock excavation as defined below.

The top of shaft soil excavation shall be defined as the highest existing ground point within the shaft diameter. For shafts where the top of shaft is above the existing ground line and where the Plans show embankment fill placed above the existing ground line to the top of shaft and above, the top of shaft soil excavation shall be defined as the top of shaft. Excavation through embankment fill placed above the top of shaft shall not be included in the quantity.

Rock excavation for shaft including haul is measured by the cubic yards of shaft excavated. The cubic yards shall be calculated based on the shaft diameter shown in the Plans, the top of rock line, defined as the highest bedrock point within the shaft diameter, and the bottom elevation shown in the Plans.

Furnishing and placing temporary casing is measured by the linear feet of required temporary casing installed within the limits shown in the Plans and as required by the geotechnical report.

Furnishing permanent casing is measured by the linear feet of required permanent casing installed within the limits shown in the Plans and as required by the geotechnical report. For piers with a steel reinforcing bar splice zone between the shaft and the column or pier, permanent casing is required, at a minimum, from the top of shaft to 2'-0" below the construction joint at the base of the splice zone.

Placing permanent casing is measured per each for each permanent casing placed.

Casing shoring is measured by the linear feet of casing shoring installed. The linear feet dimension shall be computed using either the top of casing shoring, defined as the highest existing ground point within the casing shoring, or the specified shaft seal vent elevation as shown in the Plans, whichever is higher, and the bottom elevation, which is typically coincident with the top of shaft elevation.

CSL access tube is measured by the linear foot of tube installed. One access tube is required for each foot of shaft diameter, rounded to the nearest whole number. The number of access tubes for shafts of X'-6" diameter shall be rounded up to the next highest whole number. The length dimension of each access tube shall be from 2'-0" above the top of shaft elevation, to the bottom of shaft elevation.

12.3 Construction Costs

12.3.1 Introduction

The construction costs itemized in Appendix 12.3-A1, 12.3-A2, 12.3-A3, and 12.3-A4 are to aid the user in estimating the cost of bridge and structure projects. The costs are based on historical data maintained by the Bridge and Structures Office and retrieved from recent WSDOT Contracts.

Requests for cost estimates from WSDOT Region offices and other Local Agency offices should be submitted in writing (hard copy or e-mail) to the Bridge Projects Unit, and a written or e-mail response will be returned within a reasonable time based on the schedule needs of the requesting office. Scoping or prospectus type cost estimates, and other cost estimates based upon deck area cost history and other readily available geotechnical information and project parameters can be prepared relatively quickly. Estimates requiring input from the Bridge Design Unit, either for preparation of preliminary quantities or other preliminary structural analysis will take longer to prepare.

Telephone requests for cost estimates from WSDOT Region offices and other Local Agency shall be referred to the Bridge Projects Unit for response.

All cost estimates prepared by the Bridge and Structures Office should have the concurrence of the Bridge Projects Engineer.

12.3.2 Factors Affecting Costs

A. **Type of Structure –** Many factors, as outlined in Section 2.2.3, must be considered in the selection of the type, size, and location of a bridge or wall.

   Common structures with conventional details will be within the low end and mid-range of costs. Unique or complex structures will be within the high end.

B. **Location of Project Site –** Projects in remote areas or with difficult access will generally be within or above the high end of the cost range.

C. **Size of Project Contract –** Small projects tend to be within the high end of the cost range while large projects tend to be within the low end of the cost range.

D. **Foundation Requirements –** Foundation requirements greatly affect costs. Water crossings requiring pier construction within the waterway are generally very expensive. Scour requirements can push the costs even higher. The earlier foundation information can be made available the more accurate the cost estimate will be. The Bridge Projects Unit should be made aware of unusual foundation requirements or changes to foundation type as soon as possible for updating of the estimate.

E. **Sequencing of Project –** Projects with stage construction, detours, temporary construction, etc., will be more expensive.

12.3.3 Development of Cost Estimates

Estimates prepared by the Bridge and Structures Office shall include 10 percent mobilization but not sales tax, engineering, construction contingencies, or inflation.

A. **Types**

1. Prospectus and Project Summary Estimates

   Conceptual cost estimates are prepared when little information about the project is available. Use the construction costs in Appendix A, assuming the worst case conditions, unless actual conditions are known. An example of a worst case condition is deep foundation substructure (pile supported footings or shaft foundations). In remote areas, or for small projects, use the high end of the cost range. Use mid-range costs for usual conditions.

   To cover unforeseen project modifications, add a 20 percent estimate contingency to a prospectus estimate and a 10 percent estimate contingency to a project summary estimate. These contingencies can be adjusted depending on the preliminary information available.

2. Preliminary Design Estimates

   Preliminary design estimates are prepared during the preliminary design stage when the type and size of bridge is known. Limited foundation information is sometimes available at this stage. The construction costs in Appendix A shall be used with an appropriate inflation factor, assuming the worst case conditions, unless foundation conditions are known, along with a minimum of 10 percent contingency to cover scope creep.

3. Estimate Updates During Design

   During the design period, the designer should keep the Bridge Projects Unit informed of significant changes to the design that might affect the cost. Examples of significant changes are: deeper than expected footing and seals, use of deep foundations (shafts or piles) when none were previously expected, change of substructure types, and changes to superstructure. This is a critical element in the project budgeting process.

4. Contract Estimates

   The contract estimate is prepared by the Bridge Projects Unit after the Plans and Final Quantities have been submitted to the Bridge Projects Unit for preparation of the final Bridge PS&E. The contract estimate is prepared using the quantities furnished by the Bridge Design Unit, unit bid prices from Appendix A, other historical data, and the judgment of the engineer preparing the estimate. Unique, one-of-a-kind projects require special consideration and should include an appropriate construction cost contingency.

B. **Responsibilities**

1. Bridge Projects Unit

   The Bridge Projects Unit is responsible for preparing the prospectus, project summary, preliminary, and final contract estimates and updating the preliminary estimate as needed during the design phase of the project.

   The Bridge Projects Unit assists the WSDOT Region offices and other outside Local Agency offices, such as counties and cities, to prepare prospectus and project summary estimates when requested in writing.

2. Designer

   The designer is responsible for providing preliminary quantities and final quantities to the Bridge Projects Unit to aid in the updating of preliminary estimates and the preparation of contract estimates.

C. **Documentation –** Whenever a cost estimate is prepared by the Bridge and Structures Office for an outside office, a Cost Estimate Summary sheet (WSDOT Form 230-040 and Appendix 12.3-B1) shall be filled out by the Engineer preparing the estimate. The Cost Estimate Summary shall be maintained in the Job File. During the design stage, the summary sheet shall be maintained by the Bridge Design Unit. At a minimum, the Cost Estimate Summary should list the initial and all subsequent cost estimates for each Preliminary Plan distribution made. It is the design unit supervisor's responsibility to ensure the summary sheet is up to date when the job file is submitted to the Bridge Projects Unit for preparation of the Bridge PS&E.

D. **Cost Data**

1. General

   The Bridge costs summarized in Appendix A represent common highway, railroad, and water crossings. Consult the Bridge Projects Unit for structures spanning across large rivers or canyons and other structures requiring high clearances or special design and construction features.

   The square foot costs are useful in the conceptual and preliminary design stages when details or quantities are not available. The various factors affecting costs as outlined in Section 12.3.2 must be considered in selecting the square foot cost for a particular project. As a general rule, projects including none or few of the high-cost factors will be close to the mid-range of the cost figures. Projects including many of the high-cost factors will be on the high side. The user must exercise good judgment to determine reasonable costs. During the preliminary stage, it is better to be on the prudently conservative side for budgeting purposes.

2. Deck or Wall Face Area

   The area to be used for cost estimates based upon deck or wall face area shall be computed as follows:

   Bridge Widenings and New Bridges

   The deck area of bridges is based on the actual width of the new portion of the roadway slab constructed (measured to the outside edge of the roadway slab) times the length, measured from end of wingwall to end of wingwall, end of curtain wall to end of curtain wall, or back to back of pavement seat if there are no wingwalls or curtain walls. Wingwalls are defined as walls without footings which are cast monolithically with the bridge abutment wall and may extend past the abutment footing. Curtain walls are defined as walls that are cast monolithically with the bridge abutment wall and footing and only extend to the edge of footing.

   Bridge Rail Replacement

   The bridge rail and curb removal is based on the total length of the rail and curb removed.

   Bridge Lengths With Unequal Wingwalls

   If a bridge has wingwalls or curtain walls of unequal length on opposite sides at a bridge end of wingwalls or curtain walls on one side of a pier only, the length used in computing the square foot area is the average length of the walls. If the wingwalls are not parallel to the centerline of the bridge, the measurement is taken from a projected line from the end of the wingwall normal to the centerline of the roadway.

   Retaining Walls

   If retaining walls (walls that are not monolithic with the abutment) extend from the end of the bridge, the cost of these walls is computed separately. The area of the wall is based on the overall length of the wall, and the height from the top of footing to the top of the wall.

12.4 Construction Specifications and Estimates

12.4.1 General

The Bridge Projects Unit prepares the specifications and estimates (S&E) for all structural projects designed or reviewed by the Bridge and Structures Office. The preparation includes distributing review sets, reviewing the job file, plans, PS&E check list, "Not Included in Bridge Quantities List," and Geotechnical report; preparing the cost estimates, specifications, and working day schedules; and submitting the PS&E package to the Region.

12.4.2 Definitions

A. ***Standard Specifications*** **–** The *Standard Specifications* for Road, Bridge and Municipal Construction is published biannually by the WSDOT Engineering Publications Office, is maintained by the WSDOT Construction Office, and is used as the governing construction specification for all WSDOT construction projects.

B. **Amendments –** Amendments are revisions to specific sections of the *Standard Specifications*, which are approved and enacted during the two year period that a specific edition of the *Standard Specifications* is in force. Amendments are published normally three times during a calendar year – April, August, and December.

C. **Special Provisions –** Special Provisions are supplemental specifications and modifications to the *Standard Specifications*, including Amendments, which apply to a specific project.

D. **Addendum –** A written or graphic document, issued to all bidders and identified as an addendum prior to bid opening, which modifies or supplements the bid documents and becomes a part of the contract.

E. **AD Copy –** The AD copy is the contract document advertised to prospective bidders. The AD Copy may include, but not be limited to, the following as component parts: Bid Proposal Form, Special Provisions, Amendments, Plans, and Appendicies including test hole boring logs, and environmental permit conditions.

F. As defined in *Standard Specification* Section 1-02.4, the order of precedence of AD Copy components is as follows: Addenda, Bid Proposal Form, Special Provisions, Plans, Amendments, *Standard Specifications*, and *Standard Plans*.

12.4.3 General Bridge S&E Process

A. **Typical Reviews and Milestone Dates –** The Ad Date, as established by the Region, is the anchor for all project schedule dates.

The Bridge PS&E turn-in date is the date the Bridge PS&E package is due to the Region, and serves to note the beginning of the PS&E review period. Typically, the Bridge PS&E turn-in date is ten weeks prior to the scheduled Ad Date. When a longer PS&E review period is desired by the Region, the Bridge PS&E turn-in date can be as much as 12 to 14 weeks prior to the scheduled Ad Date.

The Bridge Plans (PS&E Presubmittal) turn-in date is the date the Bridge Plans are due to the Bridge Projects Unit from the Bridge Design Unit or Bridge Consultant assigned to the project, and serves to note the beginning of the Bridge S&E preparation period. Typically, the Bridge Plans turn-in date is four weeks prior to the scheduled Bridge PS&E turn-in date.

For some projects, the Region may schedule Constructability Reviews at times prior to the scheduled Bridge Plans turn-in date. These Constructability Reviews typically include plan sheets as developed to date, and in some cases may include draft Special Provisions. For most of the few projects with Constructability Reviews, the coordination of submittals and reviews will be through the specific Bridge Design Unit involved. However, if the Constructability Review requires Special Provisions, the Bridge Projects Unit should be included in the process.

For hydraulic, mechanical, and electrical rehabilitation projects for movable bridges, the Bridge Preservation Office takes a lead role in managing the design process for the project. These projects will typically include additional review periods similar to those described above for Constructability Reviews.

B. **Bridge Plans Distribution –** Once the Bridge Projects Unit receives the Bridge Plans (PS&E Presubmittal) from the Bridge Design Unit or Bridge Consultant assigned to the project, the Bridge Scheduling Engineer will assign the project to a specific Bridge Specifications and Estimates Engineer, and will create a Bridge PS&E file for the project.

The Bridge Specifications and Estimates Engineer will distribute the Bridge Plans, along with a Not Included in Bridge Quantities List, under a cover letter addressed to the Region Design Project Engineer (Olympic and Northwest Regions) or Region Project Development Engineer (all other Regions). The distribution list also includes the FHWA Washington Division Bridge Engineer, WSDOT Bridge Construction Engineer, and the Region Project Development and Region Plans Engineer (except for Olympic Region).

For new bridges and bridge widenings, internal Bridge and Structures Office distribution includes the Bridge Design Engineer, Bridge Projects Engineer, and the Bridge Design Unit Supervisor. The Bridge Plans may be distributed to other offices such as the Materials Laboratory Geotechnical Services Branch and the Bridge Preservation Office depending on the scope of the project and the value of the added review.

The Bridge Plan distribution will specify a due date for the return of review comments to the Bridge Specifications and Estimates Engineer. This date is typically one week prior to the scheduled Bridge PS&E turn-in date, but can be modified to suit project specific schedule considerations.

C. **Bridge PS&E Development –** Following the distribution of the Bridge Plans, the Bridge Specifications and Estimates Engineer will review the Bridge Plans, develop the Bridge Special Provisions and Bridge Cost Estimate, and prepare the bridge working day schedule. See Sections 12.4.4, 12.4.5, 12.4.6, and 12.4.7.

D. **Bridge PS&E Distribution –** At the completion of the Bridge PS&E package, or at the scheduled Bridge PS&E turn-in date, whichever comes first, the Bridge Specifications and Estimates Engineer will distribute the Bridge PS&E. The Bridge PS&E package should include the items specified in Section 12.4.9.A, and should be distributed to those identified in Section 12.4.9.B.

12.4.4 Reviewing Bridge Plans

The Bridge Specifications and Estimates Engineer performs the following tasks after receiving the Bridge Plans submittal:

A. **Job File –** Review correspondence and e-mails in the job file for the items of work and other commitments which need to be included in the Bridge PS&E. Identify items that need special provisions and bid item references. Identify items that require additional research by, and information from, the bridge designer, Region designers, or others. Confirm that the job file fly leaf information has been completed by the designer (Form 221-076).

B. **PS&E Check List (Form 230-037 and Appendix 12.4-A1) –** Review the form as completed by the bridge designer for identified needs for special materials, construction requirements, permits, etc., which may need Special Provisions such as:

- Permits: United States Coast Guard
- Agreements: utilities on bridge, etc.
- Materials: high strength structural steel, high-strength concrete, polyester and polymer concrete, carbon fiber wrap, high-load elastomeric bearing pads and other high capacity bridge bearings, etc.

- Construction Requirements: temporary access, stage construction, construction over railroad, special welding and welding inspection requirements, and other special construction requirements
- Special Items: modified concrete overlay or special architectural, paint, and sealer treatments
- Proprietary Materials: identification of, and justification for use of, products and materials which are specified in the Bridge Plans by specific manufacturer and model, instead of generic manufacture

C. **Summary of Quantities (Form 230-031 and Appendix 12.2-A1) –** Verify that the Summary of Quantities is labeled as "Supervisor's Bridge Quantities." See Section 12.2.2. Quantities listed in this form are used to develop the Bridge Cost Estimate for the project.

D. **Plans –** Review the plans for consistency with the special needs identified by the bridge designer in the PS&E check list form (subsection B above), use of standard notes and General Notes, completeness of title block information, and use of terminology consistent with the *Standard Specifications*, *Standard Plans*, and Standard Bid Items.

E. **Not Included in Bridge Quantities List (Form 230-038 and Appendix 12.1-A1) –** Review the form completed by the bridge designer and compare with the Bridge Plans for items shownin the Bridge Plans that may be missing from the list. See BDM Section 12.1.2.

F. **Geotechnical Report –** Review the Geotechnical Report for the project to confirm that the foundation types, sizes, and elevations shown in the Bridge Plans are consistent with the recommendations specified in the Geotechnical Report. Obtain a copy of the final Geotechnical Report for the S&E file. Review the Geotechnical Report for construction consideration requirements which may need to be noted in the Special Provisions, such as shaft casing requirements, bridge embankment settlement periods, special excavation, etc. Compare the number of test holes and the locations shown in the layout sheets for all bridges against number and locations of test holes identified in the final Geotechnical Report.

12.4.5 Preparing the Bridge Cost Estimates

A. **General** – From the quantities shown in the Summary of Quantities form submitted with the Bridge Plans, the Bridge Specifications and Cost Estimates Engineer develops the Bridge Cost Estimate for the project. The Bridge Projects Unit uses a standard spreadsheet format for Cost Estimates. This spreadsheet includes the tabulation of all bridge bid items, a breakdown for each lump sum item, and square foot cost of the structure.

B. **Procedure –** Each quantity shown in the Summary of Quantities form is to be matched with an appropriate unit bid item or lump sum bid item. These can be Standard Bid Items from the Standard Bid Item Table, or project specific non-standard bid items.

Pricing for the bid items above can be based on the Construction Cost Estimating Aids listed in Appendix 12.3-A1, 12.3-A2, 12.3-A3, and 12.3-A4, bid tabulations from previous contracts, and the Unit Bid Analysis and Standard Item Table listing available through the WSDOT Contract Ad & Award Office web site. The Bridge Specifications and Estimates Engineer uses appropriate engineering judgment to make appropriate adjustments for inflation, site location, quantities involved, total of the work involved, etc.

All Standard Bid Items listed in the spreadsheet shall include the Standard Bid Item number assigned to that bid item. All non-standard bid items shall be identified by the appropriate pre-qualification code for the bid item work. The pre-qualification codes specified in the Standard Item Table should be reviewed to help establish the appropriate code for non-standard bid items. When in doubt, the general Bridge and Structures pre-qualification code of (B0) should be used.

All bridge cost estimates shall include mobilization, but do not include sales tax, engineering, contingencies or inflation.

12.4.6 Preparing the Bridge Specifications

A. **General –** There are three categories of Special Provisions:

1. General Special Provisions (GSP's) are supplemental specifications which are standardized and approved for Statewide use by the WSDOT Construction Office. The library of GSP's is maintained by the WSDOT Design Office. GSP's are formatted to supplement specific *Standard Specification* Sections. GSP's are identified by their publication and effective date in parenthesis immediately preceding the GSP text. GSP's are published normally three times during a calendar year – April, August, and December.

2. Bridge Special Provisions (BSP's) are supplemental specifications which are standardized and approved for Statewide use by the WSDOT Bridge and Structures Office. The library of BSP's is maintained by WSDOT Bridge and Structures Office through the WSDOT Design Office. BSP's are formatted to supplement specific *Standard Specification* Sections. BSP's are identified by the acronym "BSP" followed by their publication and effective date in parenthesis immediately preceding the BSP text. BSP's are published periodically throughout the year.

3. Project Specific Special Provisions include all supplemental specifications which are not GSP's nor BSP's. Project Specific Special Provisions, as the name implies, are intended for project specific use, whether one time or infrequent. The vast majority of Project Specific Special Provisions are formatted to supplement specific *Standard Specification* Sections. However, in rare cases, they can be formatted as "stand-alone" following the "**Description**/**Materials**/**Construction Requirements**/**Measurement**/**Payment** format. Project Specific Special Provisions are identified by six asterisks in parenthesis immediately preceding the text or heading. A Project Specific Special Provision that sees frequent use can be standardized and elevated to BSP or GSP status.

B. **Procedure –** Based on review of the Bridge Plans and the PS&E Check List, the Bridge Specifications and Estimates Engineer determines the items of work which are not already covered by the *Standard Specifications* and for which supplemental specifications are needed. Based on this determination, and review of the current list of Amendments, GSP's, and BSP's, a Bridge Special Provision runlist is prepared, listing the code numbers of the applicable Amendment, GSP, and BSP documents needed for the project. Current Amendment, GSP, and BSP documents are listed in the WSDOT Design Office Project Development web site.

These documents are listed following the Section order of the *Standard Specifications*, Amendments first, followed by the Special Provisions. Fill-in blanks for BSP's and GSP's requiring project specific information can be completed at this time.

When the *Standard Specifications*, Amendments, GSP's and BSP's are insufficient to cover project specific requirements, Project Specific Special Provisions are developed, and added by name at the appropriate location in the runlist.

See Division 6 of the WSDOT *Plans Preparation Manual* for further discussion and example flow charts.

When the Bridge Special Provision file is complete with all Special Provisions needed to accompany the Bridge Plans, the Bridge Specifications and Estimates Engineer requests a single space document of the Bridge Special Provision file for use in the Bridge PS&E distribution.

12.4.7 Preparing the Bridge Working Day Schedule

A. **General** – The Bridge Specifications and Estimates Engineer calculates the number of the working days necessary to construct the bridge portion of the contract, based on the quantities shown in the Summary of Quantities form submitted with the Bridge Plans, and enters the time in the special provision "Time for Completion." The working days are defined in the Section 1-08.5 of the *Standard Specifications*.

B. **Procedure –** The first task of estimating the number of working days is to list all the construction activities involved in the project. These include all actual construction activities such as excavation, forming, concrete placement, and curing; and the nonconstruction activities such as mobilization, material and shop plan approval. Special conditions such as staging, limited access near wetlands, limited construction windows for work in rivers and streams, limited working hours due to traffic and noise restrictions, require additional time.

The second task is to assign the number of working days to each construction activity above (see Appendix 12.4-A2). The "Construction Time Rate" table can be used as a guide to estimate construction time required. This table shows the average rate of output for a single shift, work day only. Adjustment to the rates of this table should be made based on project size, type of work involved, location of the project, etc. In general, larger project will have higher production rates than smaller projects, new construction will have higher production rates than widening, and unstaged work will have higher production rates than stages work.

The last step is to arrange construction activities, with corresponding working days, into a construction schedule on a bar chart, either by hand on the Construction Working Day Schedule Form 230-041 (see Appendix 12.4-B1) or by computer using a scheduling program. List the activities in a logical construction sequence, starting from the substructure to the superstructure. Items shall overlap where practical and the critical path shall be identified.

12.4.8 Reviewing Projects Prepared by Consultants

A. **General –** Consultants preparing Bridge Plans are required to submit their Pre-Contract Review Bridge Plans review set to the Bridge and Structures Office on or before the scheduled Bridge Plan (Pre-Contract PS&E Review) turn-in date, and with all associated information (files, forms, lists, and reports), as specified in Sections 12.4.3 and 12.4.4.

The package shall be in the same format as those prepared by the Bridge and Structures Office.

B. **Procedure –** The Bridge Specifications and Estimates Engineer reviews the consultant's Bridge Plans following the process as specified in BDM Sections 12.4.3 and 12.4.4. The review comments of the Bridge Specifications and Estimates Engineer should be combined with review comments from the Bridge Design Unit assigned to review the project, and returned to the consultant in a timely manner through the Bridge Consultant Liaison Engineer, allowing the consultant to meet the scheduled turn-in date for the Bridge PS&E. After the consultant addresses all review comments and resubmits the package as 100 percent complete, the Bridge Specifications and Estimates Engineer compiles the Bridge PS&E package (See Section 12.4.9).

Except for hydraulic, mechanical, and electrical rehabilitation projects for movable bridges, and other unique bridge projects where specifically approved by the Bridge Projects Engineer, all Bridge Special Provisions shall be prepared by the Bridge Projects Unit. The Bridge Cost Estimate and working day schedule should be prepared by the Bridge Specifications and Estimates Engineer with assistance from the consultant as appropriate.

12.4.9 Submitting the PS&E Package

A. **General –** The PS&E package includes:

1. Cover transmittal memo to the Bridge Design Engineer (for new bridges and bridge widenings only)
2. Cover letter to the Region.
3. Bridge Construction Cost Estimate for each separate structure
4. Cost Estimate Summary for each separate structure (see Appendix 12.3-B1)
5. Not Included in Bridge Quantity List
6. Construction Working Day Schedule
7. Single space document of Bridge Special Provision file with runlist
8. Log of Test Borings
9. One Plan Set (11" by 17")

B. **Procedure –** The cover memorandum should be addressed to either the Region Plans Engineer (all Regions except for Olympic Region) or the Region Design Project Engineer (Olympic Region only). Others that should be included as cc's in the distribution are as follows:

1. FHWA Washington Division Bridge Engineer.
2. Region Design Project Engineer (except for Olympic Region – already addressed above).
3. Region Construction Project Engineer (if known and if different from the Region Design Project Engineer).
4. Northwest Region Area Engineering Manager (Northwest Region only).
5. Region Project Development Engineer (Eastern, North Central, South Central, and Southwest Regions only).
5. Bridge Construction Engineer.
6. Materials Laboratory.
7. Bridge Preservation Office.
8. Bridge Management Engineer (for all Bridge Replacement, Seismic Retrofit, and Bridge Repair projects).
9. All Bridge Design Unit Supervisors whose units contributed Bridge Plans to the project.
10. All bridge consultants who contributed Bridge Plans to the project.
11. Bridge Consultant Liaison Engineer (when bridge consultants contribute Bridge Plans to the project).

Modifications to the distribution list should be made by the Bridge Specifications and Estimates Engineer based on Region involved, and project specific requirements.

12.4.10 PS&E Review Period and Turn-in for AD Copy

A. **Description –** The PS&E Review Period between Bridge PS&E turn-in and Ad Date is used to allow the Region to compile PS&E from their Design PE Office and all support groups into a Review PS&E set that can be distributed to all interested parties for review and comment. The process ensures that all parts of the PS&E are compatible, complete, and constructable.

B. **Procedure –** Each Region has its own specific process, but the general procedure is similar. The Bridge and Structures Office review set is addressed to the Bridge Projects Engineer. This occurs shortly after the Bridge PS&E turn-in date. Upon receipt in the Bridge and Structures Office, the Review PS&E set is delivered to the Bridge Specifications and Estimates Engineer assigned to the project. The review is to be performed, and comments returned to the Region, by the due date specified in the distribution letter. Review comments should be returned to both the Region Plan Reviewer and the Region Design PE contact assigned to the project, as identified in the distribution letter.

   Depending on the scope of the project, and the Region responsible for the project, there may be a meeting to discuss review comments. If such a meeting is held (generally about halfway through the PS&E review period), the Bridge Specifications and Estimates Engineer and others from the Bridge Design Unit responsible for the project, should consider attending if discussion of Bridge PS&E review comments is likely.

   Shortly after the specified due date for review comments passes, Region comments on the Bridge PS&E should be received by the Bridge Specifications and Estimates Engineer and/or the bridge designer(s) in the Bridge Design Unit. These review comments on the Bridge PS&E should be addressed before the final Bridge PS&E is turned-in for AD Copy printing. The Bridge Specifications and Estimates Engineer makes all necessary revisions to the Bridge Cost Estimate and Bridge Special Provisions, and notifies the appropriate contacts in the Region Design PE Office and the Region Plans Office when these changes are complete. This should be completed at least two weeks prior to the scheduled Ad Date.

   After the Bridge Design Unit has completed all necessary revisions to the Bridge Plans, the Bridge Plans are signed and dated in blue ink by the appropriate engineers, and the signed originals turned in to the Bridge Specifications Engineer. Copies of these signed plans are sent to the Region for use in the AD Copy PS&E. This should be completed one to two weeks prior to the scheduled Ad Date. The original signed plans are forwarded to the Bridge Plans Engineer in the Bridge Projects Unit.

Appendix 12.1-A1 Not Included In Bridge Quantities List

Washington State
Department of Transportation
Environmental And Engineering Service Center
Bridge and Structures Office

Not Included In Bridge Quantities List

SR	Job Number	Project Title	
Designed By	Checked By	Date	Supervisor
Type of Structure			

The following is a list of items for which the Bridge and Structures Office is relying on the Region to furnish plans, specifications and estimates.

1.
2.
3.
4.
5.
6.
7.
8.
9.
10.
11.
12.
13.
14.
15.
16.
17.

DOT Form 230-038 EF
Revised 2/97

Washington State Department of Transportation
Bridge and Structures

Bridge Quantities

Bridge No. _____ Date _____ ✓ **Indicate Unit of Measure:** ☐ English ☐ Metric

St. Item No.	Item Use	Item Description	Quantity	Unit of Measure
0001	Std. Item	Mobilization	_____	L.S.
0061 0061	GSP Item	Removing Portion of Existing Bridge Type _____ Area _____ SF/SM	_____	L.S.
		Drilled Holes: *Less than 12"/305 mm long:* *Greater than 12"/305 mm long:* **Number** **Diameter** **Number** **Diameter** **Length** _____ _____ Inch/mm _____ _____ Inch/mm _____ LF/M _____ _____ Inch/mm _____ _____ Inch/mm _____ LF/M _____ _____ Inch/mm _____ _____ Inch/mm _____ LF/M		
		Core Drilled Holes: *Less than 12"/305 mm long:* *Greater than 12"/305 mm long:* **Number** **Diameter** **Number** **Diameter** **Length** _____ _____ Inch/mm _____ _____ Inch/mm _____ LF/M _____ _____ Inch/mm _____ _____ Inch/mm _____ LF/M _____ _____ Inch/mm _____ _____ Inch/mm _____ LF/M		
0071 0071	GSP Item	Removing Existing Bridge Type _____ Area _____ SF/SM	_____	L.S.
0259	BSP Item	Work Access	_____	L.S.
	BSP Item	Type _____ Area _____ SF/SM		
4001	BSP Item	Temporary Bridge Type _____ Area _____ SF/SM	_____	L.S.
4006	Std. Item	Structure Excavation Class A Incl. Haul Dry (includes unsuitable if specified by Geotech Report) **Pier** **Soil** _____ _____ CY/M3 _____ _____ CY/M3 _____ _____ CY/M3 _____ _____ CY/M3 Cofferdam: **Pier** **Soil** **Rock** _____ _____ CY/M3 _____ CY/M3 _____ _____ CY/M3 _____ CY/M3 _____ _____ CY/M3 _____ CY/M3 _____ _____ CY/M3 _____ CY/M3	_____	CY/M3
4010	Sp. Prov.	Special Excavation **Pier** **Soil** _____ _____ CY/M3 _____ _____ CY/M3 _____ _____ CY/M3 _____ _____ CY/M3	_____	CY/M3

DOT Form 230-031 EF
Revised 07/2011

Page 1 of 6

St. Item No.	Item Use	Item Description	Quantity	Unit of Measure
4013	Std. Item	Shoring or Extra Excavation Class A	_____	L.S.

Dry:

	Average Overall Height			
Pier	<6 ft./2 m	6 ft./2 m to 10 ft./3 m	10 ft./3 m to * 20 ft./6 m	>20 ft./6 m *
_____	_____ SF/SM	_____ SF/SM	_____ SF/SM	_____ SF/SM
_____	_____ SF/SM	_____ SF/SM	_____ SF/SM	_____ SF/SM
_____	_____ SF/SM	_____ SF/SM	_____ SF/SM	_____ SF/SM
_____	_____ SF/SM	_____ SF/SM	_____ SF/SM	_____ SF/SM

Cofferdam:

	Average Overall Height			
Pier	<6 ft./2 m	6 ft./2 m to 10 ft./3 m	10 ft./3 m to * 20 ft./6 m	>20 ft./6 m *
_____	_____ SF/SM	_____ SF/SM	_____ SF/SM	_____ SF/SM
_____	_____ SF/SM	_____ SF/SM	_____ SF/SM	_____ SF/SM
_____	_____ SF/SM	_____ SF/SM	_____ SF/SM	_____ SF/SM
_____	_____ SF/SM	_____ SF/SM	_____ SF/SM	_____ SF/SM

*Indicate average height

7071	GSP Item	Rock Dowel Type	_____	Each
7070	GSP Item	Rock Bolt	_____	Each
4007	Sp. Prov.	Soil Excavation For Shaft Including Haul	_____	CY/M3
4008	Sp. Prov.	Rock Excavation For Shaft Including Haul	_____	CY/M3
Varies	Sp. Prov.	Furnishing and Placing Temp. Casing For _____ Diam. Shaft	_____	LF/M
Varies	Sp. Prov.	Furnishing Permanent Casing For _____ Diam. Shaft	_____	LF/M
Varies	Sp. Prov.	Placing Permanent Casing For _____ Diam. Shaft	_____	Each
4039	Sp. Prov.	Casing Shoring	_____	LF/M
4164	Sp. Prov.	CSL Access Tube	_____	LF/M
4152	Sp. Prov.	St. Reinf. Bar For Shaft	_____	LB/KG
4168	Sp. Prov.	Conc. Class 4000P For Shaft	_____	CY/M3
0256	Sp. Prov.	Removing Shaft Obstructions	_____	Est.
Varies	GSP Item	Preboring For _____ Pile	_____	LF/M
4060	Std. Item	Furnishing and Driving Concrete Test Pile	_____	Each
4070	Std. Item	Furnishing Concrete Piling - _____Diameter	_____	LF/M
4080	Std. Item	Driving Concrete Pile - _____Diameter	_____	Each
4085	Std. Item	Furnishing and Driving Steel Test Pile	_____	Each
4090	Std. Item	Furnishing Steel Piling	_____	LF/M
4095	Std. Item	Driving Steel Pile	_____	Each
4100	Std. Item	Furnishing and Driving Timber Test Pile	_____	Each
4105	Std. Item	Furnishing Timber Piling - Untreated	_____	LF/M
4107	Std. Item	Furnishing Timber Piling _____	_____	LF/M
4108	Std. Item	Driving Timber Pile - Untreated	_____	Each
4111	Std. Item	Driving Timber Pile _____	_____	Each
4116	Std. Item	Pile Splice - Timber	_____	Each
8376	Std Item	Furnishing Steel Pile Tip or Shoe	_____	Each
4130	Std. Item	Placing Prestressed Hollow Concrete Pile _____	_____	Each
4140	Std. Item	Driving Prestressed Hollow Concrete Pile _____	_____	Each

DOT Form 230-031 EF
Revised 07/2011

St. Item No.	Item Use	Item Description	Quantity	Unit of Measure
--	Sp. Prov.	Pile Loading Test No. of Tests _____ Each Pile Size _____ Ton/Tonne	_____	LF/M
4144	Std. Item	Epoxy-Coated St. Reinf. Bar For _____	_____	LB/KG
4148	Std. Item	Epoxy-Coated St. Reinf. Bar For Bridge	_____	LB/KG
4149	Std. Item	St. Reinf. Bar for Bridge	_____	LB/KG
4151	Std. Item	St. Reinf. Bar for _____	_____	LB/KG
--	Sp. Prov.	Wire Mesh _____	_____	SY/SM
4166	Std. Item	Lean Concrete _____	_____	CY/M3
--	Std. Item	Conc. Class _____	_____	CY/M3
4322	Std. Item	Conc. Class 4000 for Bridge	_____	CY/M3
4155	Std. Item	Conc. Class 4000 for Traffic Barrier	_____	CY/M3
4202	Std. Item	Conc. Class 4000 for _____	_____	CY/M3
4200	Std. Item	Conc. Class 3000 for _____	_____	CY/M3
4325	Std. Item	Conc. Class 5000 for Bridge	_____	CY/M3
4205	Std. Item	Conc. Class 5000 for _____	_____	CY/M3
4324	Std. Item	Conc. Class 4000W for Bridge	_____	CY/M3
4204	Std. Item	Conc. Class 4000W for _____	_____	CY/M3
--	GSP Item	Conc. Class EA	_____	CY/M3
--	Sp. Prov.	Conc. Class HE	_____	CY/M3
--	GSP Item	Fractured Fin Finish	_____	SY/SM
4230	Std. Item	Structural Carbon Steel	_____	LB/KG
4235	Std. Item	Structural Low Alloy Steel	_____	LB/KG
4240	Std. Item	Structural High Strength Steel	_____	LB/KG
4246	Std. Item	Cast Steel	_____	LB/KG
4251	Std. Item	Forged Steel	_____	LB/KG
4256	Std. Item	Cast Iron	_____	LB/KG
4261	Std. Item	Malleable Iron	_____	LB/KG
4267	Std. Item	Ductile Iron	_____	LB/KG
4271	Std. Item	Cast Bronze	_____	LB/KG
4280	Std. Item	Timber and Lumber - Untreated	_____	MBM/M3
4282	Std. Item	Timber and Lumber - Creosote Treated	_____	MBM/M3
4284	Std. Item	Timber and Lumber - Salts Treated	_____	MBM/M3
4300	Std. Item	Superstructure (for Concrete Bridges) Bridge Plan Area _____ SF/SM	_____	L.S.
4311	Std. Item	Bridge Deck (for Steel Bridges) Bridge Plan Area _____ SF/SM	_____	L.S.

Page 3 of 6

DOT Form 230-031 EF
Revised 07/2011

St. Item No.	Item Use	Item Description	Quantity	Unit of Measure
6945	Std. Item	Conduit Pipe 2" Diam.	_____	LF/M
4400	Sp. Prov.	Steel Handrail	_____	LF/M
4357	Sp. Prov.	Bridge Rail - Low Fence Type - Superstr.	_____	LF/M
--	Sp. Prov.	Bridge Rail - High Fence Type	_____	LF/M
4410	Std. Item	Bridge Railing Type _____	_____	LF/M
4420	GSP Item	Bridge Grate Inlet	_____	Each
4453	GSP Item	Pigmented Sealer	_____	SY/SM
7169	Std. Item	Structural Earth Wall	_____	SF/SM
--	Sp. Prov.	_____	_____	_____
--	Sp. Prov.	_____	_____	_____
5656	GSP Item	Bridge Approach Slab	_____	SY/SM

DOT Form 230-031 EF
Revised 07/2011

Breakdown of Items for Superstructure or Bridge Deck

St. Item No.	Item Use	Item Description	Quantity	Unit of Measure
--	Std. Item	Epoxy-Coated Steel Reinforcing Bar		LB/KG
--	Std. Item	Epoxy-Coated Steel Reinforcing Bar (Traffic Barrier)		LB/KG
--	Std. Item	Steel Reinforcing Bar		LB/KG
--	Std. Item	Steel Reinforcing Bar (Traffic Barrier)		LB/KG
--	GSP Item	Conc. Class _____		CY/M3
--	Std. Item	Conc. Class 4000D		CY/M3
--	Std. Item	Conc. Class 4000		CY/M3
--	Std. Item	Conc. Class 4000 (Traffic Barrier)		CY/M3
--	Std. Item	Conc. Class 5000		CY/M3
--	Std. Item	Conc. Class _____ LS		CY/M3
--	GSP Item	Fractured Fin Finish		SY/SM
--	Std. Item	Structural Carbon Steel		LB/KG
--	Std. Item	Structural Low Alloy Steel		LB/KG
--	Std. Item	Structural High Strength Steel		LB/KG
--	Std. Item	Cast Steel		LB/KG
--	Std. Item	Forged Steel		LB/KG
--	Std. Item	Cast Iron		LB/KG
--	Std. Item	Malleable Iron		LB/KG
--	Std. Item	Ductile Iron		LB/KG
--	Std. Item	Cast Bronze		LB/KG
--	Std. Item	Timber and Lumber - Untreated		MBM/M3
--	Std. Item	Timber and Lumber - Creosote Treated		MBM/M3
--	Std. Item	Timber and Lumber - Salts Treated		MBM/M3
--	Sp. Prov.	Glulam Deck Panels		MBM/M3
6945	Std. Item	Conduit Pipe 2” Diameter		LF/M
--	Sp. Prov	Steel Handrail		LF/M
--	Sp. Prov	Bridge Rail - Low Fence Type - Superstr.		LF/M
--	SP. Prov	Bridge Rail - High Fence Type		LF/M
--	Std. Item	Bridge Railing Type _____		LF/M
--	Std. Item	Traffic Barrier		LF/M
--	Sp. Prov.	Special Bridge Drain		Each
4433	Sp. Prov.	Modify Bridge Drain		Each
4434	GSP Item	Plugging Existing Bridge Drain		Each
4420	GSP Item	Bridge Grate Inlet		Each

DOT Form 230-031 EF
Revised 07/2011

Page 5 of 6

St. Item No.	Item Use	Item Description	Quantity	Unit of Measure
Varies	GSP Item	Expansion Joint System Type _____ Length _____ LF/M Type _____ Length _____ LF/M Type _____ Length _____ LF/M	_____	LF/M
4444	BSP Item	Expansion Joint Modification Type _____ Length _____ LF/M	_____	LF/M
4232	Std. Item	Modified Concrete Overlay	_____	CF/M3
4233	Std. Item	Finishing and Curing Modified Concrete Overlay		SY/SM
4456	Std. Item	Scarifying Concrete Surface	_____	SY/SM
	BSP Item	Polymer Concrete Overlay	_____	SY/SM
	Std. Item	Further Deck Preparation (for Modified Conc. overlay only) Volume _____ CF/CM Avg. Depth _____ Inch/mm	_____	L.S.
4445	GSP Item	Bridge Deck Repair (for HMA overlays only) Volume _____ CF/CM Avg. Depth _____ Inch/mm	_____	L.S.
--	GSP Item	Pigment Sealer	_____	SY/SM
4455/8643	GSP Item	Membrane Waterproofing (Deck Seal)	_____	SY/SM
--	Sp. Prov.	Pot Bearing	_____	Each
--	BSP Item	Disc Bearing	_____	Each
--	BSP Item	Spherical Bearing	_____	Each
--	BSP Item	Cylindrical Bearing	_____	Each
--	Std. Item	Elastomeric Bearing Pad (for pads only)	_____	Each
--	Sp. Prov.	Elastomeric Bearing Pad Assembly (for a fabricated assembly)	_____	Each
--	GSP Item	Fabric Pad Bearing	_____	Each
4269	BSP Item	Prestressed Conc. Girder W42G/W42MG	_____	LF/M
4269	BSP Item	Prestressed Conc. Girder W50G/W50MG	_____	LF/M
4269	BSP Item	Prestressed Conc. Girder W58G/W58MG	_____	LF/M
4269	BSP Item	Prestressed Conc. Girder W74G/W74MG	_____	LF/M
4269	BSP Item	Prestressed Conc. Girder WF83G/WF83MG	_____	LF/M
4269	BSP Item	Prestressed Conc. Girder WF95G/WF95MG	_____	LF/M
4269	BSP Item	Prestressed Con. Girder W100G	_____	LF/M
--	Std. Item	Prestressing	_____	LB/KG
4269	Sp. Prov.	Prestressed Conc. Girder _____In. PCPS Slab	_____	LF/M
4269	Sp. Prov.	Prestressed Conc, Girder PCPS Ribbed Girder	_____	LF/M
4269	Sp. Prov.	Prestressed Conc. Girder PCPS Double Tee	_____	LF/M
--	Sp. Prov.	Precast Segment Volume _____ CY/CM	_____	LF/M
--	Sp. Prov.	_____	_____	_____
--	Sp. Prov.	_____	_____	_____

Page 6 of 6

DOT Form 230-031 EF
Revised 07/2011

UNIT COSTS

	UNIT	LOW	AVERAGE	HIGH ΔΔ
Prestressed Concrete Girders — Span 50 - 175 FT.				
Water Crossing w/piling	SF	$150.00	$175.00	$200.00
Water Crossing w/spread footings	SF	$140.00	$165.00	$190.00
Dry Crossing w/piling	SF	$120.00	$155.00	$180.00
Dry Crossing w/spread footings	SF	$110.00	$145.00	$160.00
Reinforced Concrete And Post-Tensioned Concrete Box Girder — Span 50 - 200 FT.				
Water Crossing w/piling	SF	$200.00	$250.00	$300.00
Water Crossing w/spread footings	SF	$175.00	$225.00	$275.00
Dry Crossing w/piling	SF	$160.00	$200.00	$250.00
Dry Crossing w/spread footings	SF	$150.00	$190.00	$230.00
Reinforced Concrete Flat Slab — Span 20 - 60 FT.	SF	$130.00	$155.00	$180.00
Prestressed Concrete Slabs — Span 13 - 69 FT.	SF	$110.00	$130.00	$150.00
Prestressed Concrete Decked Bulb -Tee Girder — Span 40 - 115 FT.	SF	$130.00	$155.00	$180.00
Steel Girder — Span 60 - 400 FT.	SF	$150.00	$200.00	$250.00
Steel Box Girder — Span 300 - 700 FT.	SF		$250.00	
Steel Truss — Span 300 - 700 FT.	SF		$275.00	
Steel Arch — Span 30 - 400 FT.	SF		* $300.00	
Bridge Approach Slab	SY		$250.00	
Concrete Bridge Removal	SF	$20.00	$35.00	$50.00
Widening Existing Concrete Bridges (Including Removal)	SF	$175.00	$200.00	$300.00
Railroad Undercrossing — Single Track	LF	* $9,000.00 (Steel Underdeck Girder) * $11,000.00 (Steel Thru-Girder)		
Railroad Undercrossing — Double Track	LF	* $14,000.00		
Pedestrian Bridge — Reinforced Concrete	SF	$200.00	$300.00	$600.00
Reinforced Concrete Rigid Frame (Tunnel)	SF		* $100.00	
Replace Existing Curbs & Barrier With Safety Shape Traffic Barrier (Including Removal)	LF	$150.00	$200.00	$250.00
Reinforced Concrete Retaining Wall (Exposed Area)	SF	$55.00	$75.00	$90.00
SE Wall — Welded Wire	SF	$20.00	$30.00	$40.00
SE Wall — Precast Conc. Panels or Conc. Block	SF	$30.00	$40.00	$50.00
SE Wall — CIP Conc. Fascia Panels (Special Design)	SF	$40.00	$50.00	$60.00

UNIT COSTS

	UNIT	LOW	AVERAGE	HIGH ΔΔ
Permanent Geosynthic Wall w/ Shotcrete Facing	SF	$20.00	$35.00	$50.00
Permanent Geosynthic Wall w/ Concrete Fascia Panel	SF	$30.00	$45.00	$60.00
Soil Nail Wall	SF	$80.00	$100.00	$130.00
Shotcrete Facing	SF	$20.00	$30.00	$40.00
Concrete Fascia Panel	SF	$30.00	$40.00	$50.00
Soldier Pile Wall (Exposed Area)	SF	$100.00	$120.00	$130.00
Soldier Pile Tieback Wall (Exposed Area)	SF	$140.00	$160.00	$200.00
Concrete Crib Wall Concrete Headers	SF	$40.00	$50.00	$60.00

*Based on limited cost data. Check with the Bridge PS&E Engineer.

Bridge areas are computed as follows:
Typical Bridges: Width x Length

Width: Total width of Deck, including portion under the barrier.
Length: Distance between back of pavement seats, or for a Bridge having Wingwalls, 3'-0" behind the top of the embankment slope; typically end of Wingwalls to end of Wingwalls, reference Standard Plans H9.

Special Cases:

Widenings - Actual area of new construction.

Tunnel - Outside dimension from top of footing to top of footing over the tunnel roof, i.e., including walls and top width.

ΔΔ For small jobs (less than $100,000), use the high end of the cost range as a starting point.

Before using these structure unit costs for any official WSDOT project cost estimate, contact the Bridge and Structures Office at (360) 705-7201 to discuss the specific project criteria and constructability related risks, so an appropriate structures construction cost can be provided.

***(Note: Unit structure costs include mobilization but do not include* sales tax, engineering, or contingency)**

SUBSTRUCTURE

BID ITEMS	UNIT	UNIT COST LOW		HIGH ΔΔ
Structure Excavation Class A Incl. Haul				
Earth	CY	$12.00	—	$30.00
Rock	CY	$100.00	—	$220.00
Inside Cofferdam — Earth	CY	$22.00	—	$33.00
— Rock	CY	$110.00	—	$190.00
Shoring Extra Excavation Class A				
Dry — Depth under 6′	SF	$3.00	—	$8.00
Dry — 6′ - 10′	SF	$7.00	—	$11.00
Dry — 10′ - 20′	SF	$11.00	—	$22.00
Cofferdam	SF	$30.00	—	$40.00
Preboring For Standard Piles	LF	$35.00	—	$60.00
Furnishing & Driving Test Piles				
Concrete	EACH	$5,000.00	—	$10,000.00
Steel	EACH	$4,000.00	—	$8,000.00
Timber	EACH	$2,000.00	—	$3,000.00
Furnishing Piling				
Conc. _____ Dia.	LF	$35.00	—	$45.00
Steel — TYP HP 12x53	LF	$30.00	—	$35.00
Timber — Creosote Treated	LF	$10.00	—	$12.00
Timber — Untreated	LF	$8.00	—	$10.00
** Pile Tip				
CIP Concrete (Steel Casing — Short Tip)	EACH	$200.00	—	$250.00
CIP Concrete (Steel Casing — 10 Stinger)	EACH	$4,500.00	—	$5,500.00
Steel (H-Pile)	EACH	$120.00	—	$220.00
Timber (Arrow Tip)	EACH	$25.00	—	$45.00
Driving Piles (40′ - 70′ Lengths)				
Concrete _____ Dia.	EACH	$500.00	—	$1,000.00
Steel	EACH	$350.00	—	$800.00
Timber	EACH	$225.00	—	$450.00

SUBSTRUCTURE

BID ITEMS	UNIT	UNIT COST LOW		HIGH ΔΔ
Shafts				
Soil Excavation For Shaft Including Haul	CY	$300.00	—	$600.00
Rock Excavation For Shaft Including Haul	CY	$600.00	—	$800.00
Furnishing & Placing Temp. Casing For Shaft	LF	$125.00	—	$350.00
Furnishing Permanent Casing For Shaft	LF	$150.00	—	$600.00
Placing Permanent Casing For Shaft	EACH	$2,000.00	—	$3,000.00
Casing Shoring	LF	$150.00	—	$350.00
Shoring or Extra Excavation CL.A — Shaft	EST	$10,000.00	—	$25,000.00
Conc. Class 4000P For Shaft	CY	$250.00	—	$350.00
St. Reinf. Bar For Shaft	LBS	$1.00	—	$1.50
CSL Access Tubes	LF	$10.00	—	$15.00
Removing Shaft Obstructions	EST	10% of all of above shaft ____		
St. Reinf. Bar For Bridge	LBS	$1.00	—	$1.30
Epoxy-Coated St. Reinf. Bar For Bridge	LBS	$1.20	—	$1.70
Conc. Class 4000W	CY	$250.00	—	$400.00
Conc. Class 4000P	CY	$250.00	—	$400.00
Conc. Class 4000 (Footings)	CY	$400.00	—	$600.00
Conc. Class 4000 (Abut. & Ret. Walls)	CY	$450.00	—	$650.00
Conc. Class 5000	CY	$550.00	—	$750.00
Lean Concrete	CY	$200.00	—	$250.00
Conc. Class 4000P (CIP Piling)	CY	$200.00	—	$250.00

ΔΔ For small jobs (less than $100,000), use the high end of the cost range as a starting point.
** Pile ultimate capacity will affect these prices. Check with Bridge PS&E Engineer if unsure.

SUPERSTRUCTURE

BID ITEMS	UNIT	UNIT COST LOW	UNIT COST HIGH ΔΔ
Elastomeric Bearing Pads			
Girder Seat	EACH	$150.00	$200.00
Girder Stop	EACH	$100.00	$150.00
Bearings - Spherical and Disc (In place with plates)	KIP	$15.00	$18.00
Fabric Pad Bearing (In place, including all plates, TFE, etc.)	EACH	$2,000.00	$3,000.00
Prestressed Concrete I Girder			
W42G (Series 6)	LF		$200.00
W50G (Series 8)	LF		$225.00
W58G (Series 10)	LF		$245.00
W74G (Series 14)	LF		$265.00
Wide Flange Prestressed Concrete Girder			
WF42G	LF		$250.00
WF50G	LF		$275.00
WF58G	LF		$300.00
WF74G	LF		$325.00
W83G	LF		$350.00
W95G	LF		$400.00
Spliced Prestressed Concrete I Girder			
WF74PTG	LF		$250.00
W83PTG	LF		$275.00
W95PTG	LF		$300.00
Bulb Tee Girder			
WBT32G	LF		$250.00
WBT38G	LF		$275.00
WBT62G	LF		$300.00
Trapezodial Tub Girder			
U54G4	LF		$500.00
U54G5	LF		$510.00
U54G6	LF		$520.00
U66G4	LF		$530.00
U66G5	LF		$540.00
U66G6	LF		$560.00
U78G4	LF		$570.00
U78G5	LF		$580.00
U78G6	LF		$600.00
Wide Flange Trapezodial Tub Girder			
UF60G4	LF		$520.00
UF60G5	LF		$530.00
UF60G6	LF		$540.00
UF72G4	LF		$550.00
UF72G5	LF		$560.00
UF72G6	LF		$570.00
UF84G4	LF		$580.00
UF84G5	LF		$590.00
UF84G6	LF		$600.00

SUPERSTRUCTURE

BID ITEMS	UNIT	UNIT COST LOW	UNIT COST HIGH ΔΔ
Structural Carbon Steel (Steel girder, when large amount of steel is involved)	LBS	$1.00	$1.50
Structural Low Alloy Steel (Steel girder, when large amount of steel is involved)	LBS	$1.25	$1.75
Structural Steel (Sign supports, when small amounts of steel is involved)	LBS	$4.00	$6.00
Timber & Lumber	MBM	$2,000.00	$2,800.00
Creosote Treated	MBM	$2,250.00	$3,000.00
Salts Treated	MBM	$1,500.00	$2,000.00
Untreated	MBM	$1,750.00	$2,250.00
Lagging (in place) Untreated	MBM	$2,550.00	$3,500.00
Expansion Joint Modification	LF	$400.00	$600.00
Expansion Joint System			
Compression Seal	LF	$80.00	$100.00
Modular (Approx. $100 per inch of movement)	LF	$1,500.00	$3,500.00
Strip Seal	LF	$250.00	$500.00
Rapid Cure Silicone	LF	$70.00	$100.00
Bridge Drains	EACH	$400.00	$600.00
Bridge Grate Inlets	EACH	$1,500.00	$2,000.00
Conc. Class 5000	CY	$700.00	$850.00
Conc. Class 5000 (Segmental Constr.)	CY	$850.00	$1,000.00
Conc. Class 4000D (Deck Only)	CY	$700.00	$800.00
Conc. Class 4000	CY	$650.00	$750.00
Conc. Class EA (Exposed Aggregate)	CY	$500.00	$600.00
Conc. Class 4000 LS (Low Shrinkage)	CY	$400.00	$550.00
Conc. Class 5000 LS	CY	$500.00	$600.00
St. Reinf. Bar	LBS	$1.00	$1.50
Epoxy-Coated St. Reinf. Bar	LBS	$1.25	$1.75
Post-tensioning Prestressing Steel (Includes Anchorages)	LBS	$6.00	$8.00
Traffic Barrier	LF	$90.00	$120.00
Bridge Railing Type BP & BP-S	LF	$60.00	$85.00
Bridge Railing Type Thrie Beam	LF	$60.00	$85.00
Modified Conc. Overlay	CF	$40.00	$80.00
Furnishing and Curing Modified Conc. Overlay	SY	$60.00	$100.00
Scarifying Conc. Overlay	SY	$15.00	$20.00
Polymer Concrete	SY	$90.00	$150.00
Polyester Concrete	CF	$140.00	$250.00

ΔΔ For small jobs (less than $100,000), use the high end of the cost range as a starting point.

MISCELLANEOUS

BID ITEMS	UNIT	UNIT COST LOW	UNIT COST HIGH ΔΔ
Conduit Pipe 2" Diameter	LF	$10.00	$15.00
Sign Support (Brackets, Mono, or Truss Sign Bridges)	LBS	$5.00	$7.00
Concrete Surface Finishes			
Fractured Fin Finish	SY	$20.00	$30.00
Exposed Aggregate Finish (Requires the use of concrete Class EA)	SY	$20.00	$25.00
Pigmented Sealer	SY	$7.00	$10.00
Painting Existing Steel Bridges (Lead Base)	TON (Steel)	$650.00	$900.00
Painting New Steel Bridges	LBS (Steel)	$0.12	$0.15
Mobilization	Sum of Items	10%	
Masonry Drilling Δ			
Holes up to 1'-0" in depth			
1" Diameter	EACH	$30.00	
1 ½" Diameter	EACH	$35.00	
2" Diameter	EACH	$40.00	
2 ½" Diameter	EACH	$42.00	
3" Diameter	EACH	$44.00	
3 ½" Diameter	EACH	$46.00	
4" Diameter	EACH	$52.00	
5" Diameter	EACH	$54.00	
6" Diameter	EACH	$70.00	
7" Diameter	EACH	$90.00	
Removal of Rails and Curbs	LF	$90.00	$140.00
Removal of Rails, Curbs, and Slab	SF	$30.00	$60.00
Further Deck Preparation	CF	$120.00	$175.00
Bridge Deck Repair	CF	$120.00	$180.00
Removing HMA from bridge deck	SY	$8.50	$13.50
Plugging Existing Bridge Drain	EACH	$350.00	

Δ For holes greater than 1'-0" in depth and up to 20'-0" in depth, use 1.5 x above prices.
If drilling through steel reinforcing, add $16.00 per lineal inch of steel drilled.

ΔΔ For small jobs (less than $100,000), use the high end of the cost range as a starting point.

Washington State Department of Transportation

Special Provisions Checklist

SR	Job No.	Project Title		
Design By		Check By	Date	Supervisor
Type of Structure				

Instructions:
- [X] Check items pertaining to this structure
- [X] _____ Note other items with "X" in box and fill in blank line
- [ ] Leave blank if it **DOES NOT** pertain to this structure

A. Permits and Regulations
- [ ] Coast Guard
- [ ] _____

B. Railroads
- [ ] Railroad Bridge
- [ ] Railroad in Vicinity
- [ ] _____

C. Order of Work
- [ ] Approach embankment settlement period
- [ ] Stage construction sequence
- [ ] _____

D. Traffic Control
- [ ] Reduction in traffic lanes
- [ ] Traffic within _____ feet of new construction
- [ ] Traffic detoured, no traffic on bridge
- [ ] One way traffic on bridge
- [ ] _____

E. Utilities and Existing Pavement
- [ ] Utilities on Bridge, type _____
- [ ] Existing utilities in vicinity of construction
- [ ] Existing pavement in vicinity of construction
- [ ] _____

F. Falsework
- [ ] Falsework opening over existing roadway
- [ ] Falsework opening over railroad
- [ ] Falsework opening over water
- [ ] Protection of falsework
- [ ] Supported from existing structure
- [ ] Not supported from existing structure
- [ ] Special falsework release sequence required
- [ ] _____

DOT Form 230-037 EF
Revised 07/2011

G. Foundation

- ☐ Excavation near existing pavement
- ☐ Excavation near railroad track or facilities
- ☐ Concrete Seals
- ☐ Seal construction using a berm
- ☐ Cofferdams
- ☐ Pumping water from foundation excavation required
- ☐ Riprap at piers
- ☐ Removal of unsuitable material
- ☐ Rock excavation requiring threshold limit value
- ☐ Special Excavation
- ☐ _____

H. Forms

- ☐ Special forms for architectural treatment
- ☐ Fractured Fin Finish
- ☐ Variable depth random board finish
- ☐ 3/4 inch random board finish
- ☐ Remove forms from cells which have access (Box grider)
- ☐ _____

I. Piles

- ☐ Concrete test pile
- ☐ Concrete piling ____ inch diameter
- ☐ Steel test pile
- ☐ Steel piling _____
- ☐ Timber Test Pile
- ☐ Timber piling
- ☐ Pile loading test
- ☐ Pile minimum tip elevations
- ☐ Pile splice
- ☐ Pile tip
- ☐ Preboring for pile
- ☐ Driving piles in highly developed business or residential areas
- ☐ Excavation for pile
- ☐ Driving from existing structure
- ☐ No driving from existing structure
- ☐ Overdriving of piles
- ☐ _____

J. Shafts

- ☐ Required permanent casing
- ☐ Required temporary casing
- ☐ Casing shoring
- ☐ Shaft Seal
- ☐ CSL access tubes
- ☐ _____

DOT Form 230-037 EF
Revised 07/2011

K. Prestressed Concrete Griders

- ☐ Epoxy - coated prestressing steel
- ☐ Temporary strands
- ☐ f'c 28 days > 8,500 psi
- ☐ Precast prestressed member
- ☐ Spliced prestressed concrete girder
- ☐ Prestressed concrete tub girder
- ☐ _____

L. Superstructure

- ☐ Concrete class
- ☐ Post - tensioning tendons
- ☐ Elastomeric bearing pads (pad only)
- ☐ Elastomeric bearing pad assembly (fabricated assembly)
- ☐ Fabric pad bearing
- ☐ Disc bearing
- ☐ Spherical bearing
- ☐ Cylindrical bearing
- ☐ Electrical Conduit
- ☐ Expansion joint
- ☐ _____

M. Steel Structure

- ☐ Structural Carbon Steel
- ☐ Structural Low Alloy Steel
- ☐ Structural H.S. Steel
- ☐ Steel Casting
- ☐ A - 307 Fasteners
- ☐ M - 164 Fasteners
- ☐ F-1554 Fasteners
- ☐ Shop Assembling
- ☐ Notch Toughness Requirements
- ☐ Application of Paint - Color No. _____
- ☐ Steel Erection
- ☐ _____

N. Timber Structures

- ☐ Untreated
- ☐ Creosote treated
- ☐ Salt treated
- ☐ Glulam deck panels
- ☐ Type and grade of timber
- ☐ Fire prevention requirement needed
- ☐ _____

DOT Form 230-037 EF
Revised 07/2011

O. Signing and Lighting

- ☐ Navigation lighting system
- ☐ Temporary navigation light
- ☐ Sign bridge on structure
- ☐ Cantilever sign structure on bridge
- ☐ Bridge mounted sign brackets
- ☐ _____

P. Drainage System

- ☐ Special bridge drains
- ☐ Bridge grate inlets
- ☐ Downspout
- ☐ _____

Q. Surface Finish

- ☐ Fractured fin finish
- ☐ Sandblast finish
- ☐ Variable depth random board finish
- ☐ 3/4 inch random board finish
- ☐ Pigmented sealer
- ☐ _____

R. Special Classes of Concrete

- ☐ Concrete Class EA
- ☐ Concrete Class HE
- ☐ _____

S. Bridge Widening or Replacement

- ☐ Complete removal of existing structure
- ☐ Removing portions of existing structure
- ☐ Salvage Materials, storage site _____ , salvage item _____
- ☐ Coating contrete surface with epoxy resin
- ☐ Drilling holes
- ☐ Core drilled holes
- ☐ Set rebar with epoxy
- ☐ Use of rockbolts or rock anchors
- ☐ Grout, comp. strength _____ psi at ____ day, location _____
- ☐ As built Plans of existing structure available for bidder's inspection
- ☐ HMA overlay
- ☐ LMC overlay
- ☐ Polyester concrete overlay
- ☐ Bridge deck repair
- ☐ Further deck preparation
- ☐ Explosive prohibited
- ☐ Explosives allowed
- ☐ _____

DOT Form 230-037 EF
Revised 07/2011

T. Waterproofing

- ☐ Membrane waterproofing (Deck Seal)
- ☐ _____

U. Miscellaneous Items

- ☐ Temporary oak blocks
- ☐ Poured rubber
- ☐ Expaned polstyrene
- ☐ Plastic waterstops
- ☐ Expanded rubber
- ☐ Butyl rubber sheeting
- ☐ Grout, comp. strength ___ psi at _____ day, location _____
- ☐ Electrical conduit
- ☐ _____

V. Metal Bridge Railing

- ☐ Bridge Railing Type BP
- ☐ Bridge Railing Type _____
- ☐ _____

W. Repair Work

- ☐ Epoxy Crack Sealing
- ☐ Timber Redecking
- ☐ Concrete Deck Repair
- ☐ _____

X. Other Items

- ☐ Ceramic Tiles
- ☐ Sturctural Earth Wall
- ☐ Tieback Wall
- ☐ Noise Barrier Wall
- ☐ Winter Conditions
- ☐ Work Access
- ☐ Work hours or seasonal restrition
- ☐ Work Bridge
- ☐ Detour Bridge
- ☐ _____

DOT Form 230-037 EF
Revised 07/2011

Operation	Units**	Min. Output	Ave. Output	Max. Output
Substructure				
Structure Exc. & Shoring	CY/DAY	20	80	150
*Seals	CY/DAY	10	15	20
*Footings	CY/DAY	6	10	14
*Abutment Walls	CY/DAY	4	7	19
*Wingwalls	CY/DAY	1	1.5	2
*Retaining Walls with Footings	CY/DAY	4	11	17
*Columns	CY/DAY	3	4	8
Falsework for X-beams	CY/DAY	4	10	13
*X-beams	CY/DAY	16	18	20
Furnishing Piles				
Precast Concrete	DAYS	40	30	20
Cast-in-Place Concrete	DAYS	15	5	2
Steel	DAYS	30	10	2
Timber	DAYS	20	5	2
Driving Piles				
Driving Test Piles	EACH/DAY	1	1	2
Concrete	LF/DAY	100	150	200
Steel	LF/DAY	100	150	200
Timber	LF/DAY	100	150	200
Shafts	DAYS	2	3	4
Soldier Pile Walls				
Driving Soldier Pile	DAYS	2	3	4
Permanent Ground Anchor	EACH	1	4	10
Timber Lagging	MBM/DAY	1	2	4
Concrete Fascia Panel	SF/DAY	100	800	1500
Soil Nail Walls				
Soil Nail	EACH	1	4	10
Shotcrete Facing	SF/DAY	1200	3000	6000
Superstructure				
Prestressed Girders				
Girder Fabrication	DAYS	70	45	35
Set Girders	LF/DAY	200	550	1,450
*Slab & Diaphragms	CY/DAY	6	11	18

* Concrete

** All times are based on a single crew with 8-hour work DAYS

Operation	Units**	Min. Output	Ave. Output	Max. Output
Box Girders				
Span Falsework	SF/DAY	150	700	900
*Bottom Slab	CY/DAY	3	8	11
*Webs, Diaphragms, and X-beams	CY/DAY	5	18	25
*Top Slab	CY/DAY	7	9	12
Stress and Grout Strands	LBS/DAY	4,500	6,000	8,000
Strip Falsework	SF/DAY	1,500	2,200	3,000
T-Beam				
Span Falsework	SF/DAY	500	700	1,000
*Girders, Diaphragms, and Slab	CY/DAY	6	10	15
Strip Falsework	SF/DAY	1,000	1,500	2,000
Flat Slab				
Span Falsework	SF/DAY	100	250	600
*Slab and X-beams	CY/DAY	6	10	15
Strip Falsework	SF/DAY	300	500	1,000
Steel Girder				
Girder Fabrication	DAYS	200	150	110
Girder Erection	LF/DAY	50	100	200
*Slab	CY/DAY	6	10	15
Painting	SF/DAY	1,000	2,000	3,000
Miscellaneous				
*Traffic Barrier	LF/DAY	20	40	80
*Traffic Railing & Sidewalk	LF/DAY	15	35	60
*SEW Traffic Barrier	LF/DAY	15	35	60
*Concrete Deck Overlay	SY/DAY	200	250	300
Expansion Joint Replacement	DAYS/LANE CLOSURE	8	6	4
Bridge Rail Retrofit	LF/DAY	50	100	200

* Concrete

** All times are based on a single crew with 8-hour work DAYS

SR 162 7002 Carbon
River Bridge 162/14

Date of Transmittal	Estimate of Cost	Assume Accuracy %	Estimate Made By	Available Data								Copies Sent To			Remarks
				Field Data (Dated)	Date Layout Made	Foundation Date Rec.	Preliminary Quantities	Final Quantities	Estimate By Sq. Ft. Area	District	Design Branch	Program Development	
10-2-91	$517,000.00	±15%	DMJ	8-91			—		✓	3	✓	✓	Please See Cover Transmittal
1-9-92	$692,000.00	±10%	LHT					✓		✓	✓	✓	

Appendix 12.4-B1 Construction Working Day Schedule

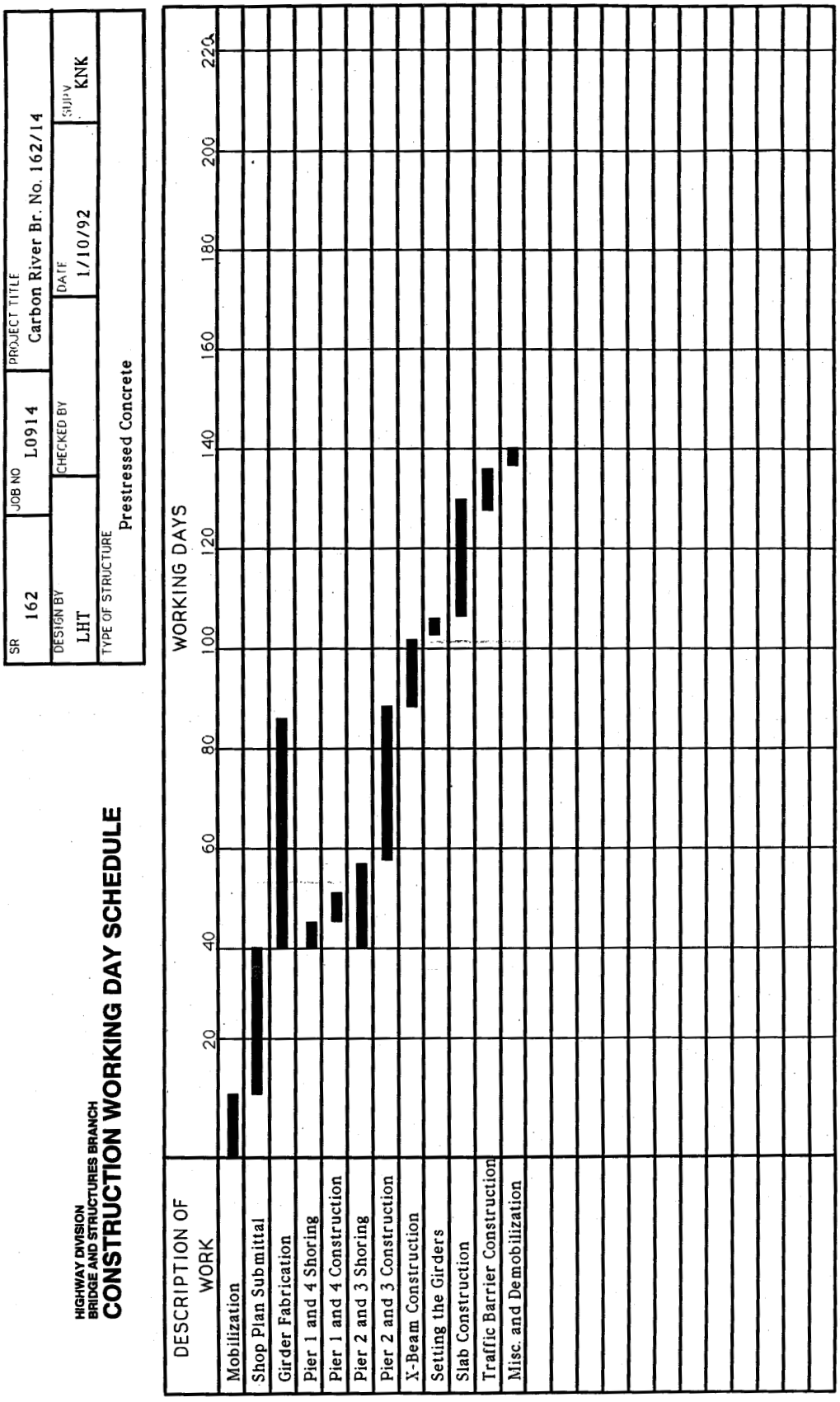

Chapter 13 Bridge Load Rating Contents

13.1 General 13.1-1
13.1.1 LRFR Method per the MBE 13.1-2
13.1.2 Load Factor Method (LFR) 13.1-4
13.1.3 Allowable Stress Method (ASD) 13.1-6
13.1.4 Live Loads 13.1-7
13.1.5 Rating Trucks 13.1-7

13.2 Special Rating Criteria 13.2-1
13.2.1 Dead Loads 13.2-1
13.2.2 Live Load Distribution Factors 13.2-1
13.2.3 Reinforced Concrete Structures 13.2-1
13.2.4 Prestresed Concrete Structures 13.2-1
13.2.4 Concrete Decks 13.2-1
13.2.5 Concrete Crossbeams 13.2-1
13.2.6 In-Span Hinges 13.2-1
13.2.7 Girder Structures 13.2-2
13.2.8 Box Girder Structures 13.2-2
13.2.9 Segmental Concrete Bridges 13.2-2
13.2.10 Concrete Slab Structures 13.2-2
13.2.11 Steel Structures 13.2-2
13.2.12 Steel Floor Systems 13.2-2
13.2.13 Steel Truss Structures 13.2-2
13.2.14 Timber Structures 13.2-3
13.2.15 Widened or Rehabilitated Structures 13.2-3

13.3 Load Rating Software 13.3-1

13.4 Load Rating Reports 13.4-1

13.99 References 13.99-1

Appendix 13.4-A1 LFR Bridge Rating Summary 13.4-A1-1
Appendix 13.4-A2 LRFR Bridge Rating Summary 13.4-A2-1

Chapter 13 Bridge Load Rating

13.1 General

Bridge load rating is a procedure to evaluate the adequacy of various structural components to carry predetermined live loads. The Bridge Load Rating Engineer in the WSDOT Bridge Preservation Office is responsible for the bridge inventory and load rating of existing and new bridges in accordance with the NBIS and the AASHTO Manual for Bridge Evaluation (MBE), latest edition. Currently, only elements of the superstructure will be rated, however, if conditions warrant, substructure elements can be rated. The superstructure shall be defined as all structural elements above the column tops including drop crossbeams.

Load ratings are required for all new, widened, or rehabilitated bridges where the rehabilitation alters the load carrying capacity of the structure. Load ratings shall be done immediately after the design is completed and rating calculations shall be filed separately per Section 13.4 and files shall be forwarded to WSDOT's Load Rating Engineer.

The Bridge Preservation Office is responsible for maintaining an updated bridge load rating throughout the life of the bridge based on the current condition of the bridge. Conditions of existing bridges change over time, resulting in the need for reevaluation of the load rating. Such changes may be caused by damage to structural elements, extensive maintenance or rehabilitative work, or any other deterioration identified by the Bridge Preservation Office through their regular inspection program.

New bridges that have designs completed after October 1, 2010 shall be rated based on the Load and Resistance Factor Rating (LRFR) method per the MBE. NBI ratings shall be based on the HL-93 truck and shall be reported as a rating factor. For new bridges designed prior to October 1, 2010, partially reconstructed or rehabilitated bridges where part of the existing structure is designed by the allowable stress method or by the load factor method (LFR), and existing structures, NBI ratings can be based on either the LFR or LRFR methods. The rating factors shall be based on HS loading and reported in tons when using the LFR method. Verify with WSDOT's Load Rating Engineer regarding which load rating method to use for existing bridges and new bridges designed prior to October 1, 2010.

By definition, the adequacy or inadequacy of a structural element to carry a specified truck load will be indicated by the value of its rating factor (RF); that is, whether it is greater or smaller than 1.0.

13.1.1 LRFR Method per the MBE

Rating Equation

$$RF = \frac{(C - \gamma_{DC}\,DC - \gamma_{DW}\,DW \pm \gamma_p\,P)}{\gamma_{LL}\,LL\,(1+IM)} \qquad \text{(13.1.1A-1)}$$

Where:

RF = Rating factor
C = $\phi c\ \phi s\ \phi n\ R_n$, where $\phi c\ \phi s \geq 0.85$ for strength limit state
C = f_R for service limit state
R_n = Nominal Capacity of member
f_R = Allowable Stress per LRFD specs
DC = Dead load due to structural components and attachments
DW = Dead load due to wearing surface and utilities
P = Permanent loads other than dead loads
LL = Live load effect
IM = Dynamic load allowance (Impact)
γ_{DC} = Dead load factor for structural components and attachments
γ_{DW} = Dead load factor for wearing surface and utilities
γ_P = Load factor for permanent load
γ_{LL} = Live load factor
ϕ_c = Condition factor
ϕ_s = System factor
ϕ_n = Resistance factor based on construction material

When rating the full section of a bridge, like a box girder or 3D truss, or crossbeams, with two or more lanes, the following formula applies when rating overload trucks.

$$RF = \frac{C - \gamma_{DC}\,DC - \gamma_{DW}\,DW \pm \gamma_p\,P - \gamma_{LL}\,LL_{lgl}(1+IM)}{\gamma_{LL}\,LL\,(1+IM)} \qquad \text{(13.1.1A-2)}$$

The formula above assumes that there is one overload truck occupying one lane, and one of the legal trucks occupying each of the remaining lanes. Trucks shall be placed in the lanes in a manner that produces the maximum forces. The live load factor for both of the legal truck and permit truck shall be equal and are dependent on the permit truck. The LL_{lgl} shown in the equation above corresponds to the maximum effect of the legal truck(s).

Condition Factor (ϕc_c)

Condition factor is based on the BMS condition state of the element per the latest inspection report.

Structural Condition of Member	ϕ_c
Good or Satisfactory, BMS Condition 1 or 2	1.00
Fair, BMS Condition 3	0.90
Poor, BMS Condition 4	0.85

System Factor (ϕ_s)

The system factor shown in the table below applies to flexure and all axial forces; use a system factor of 1 when rating shear

Super Structure Type	ϕ_s
Welded Members in Two Girder/Truss/Arch Bridges	0.85
Riveted Members in Two Girder/Truss/Arch Bridges	0.90
Multiple Eyebar Members in Truss Bridges	0.90
Three-Girder Bridges with Girder Spacing 6′	0.85
Four Girder Bridges with Girder Spacing ≤ 4′	0.95
All Other Girder and Slab Bridges	1.00
Floorbeams with Spacing >12′ and Noncontinuous Stringers	0.85
Redundant Stringer Subsystems Between Floorbeams	1.00

Dead and Live Load Factors

					Inventory HL-93	Operating HL-93	Legal & NRL Loads	Permit
Bridge Type	**Limit State**	γ_{DC}	γ_{DW}	γ_p				
Reinforced Concrete	Strength I	1.25	1.50	--	1.75	1.35	Table 13.1-1	--
	Strength II	1.25	1.50	1.0	--	--	--	Table 13.1-1
Prestressed Concrete	Strength I	1.25	1.50	1.0	1.75	1.35	Table 13.1-1	--
	Strength II	1.25	1.50	1.0	--	--	--	Table 13.1-1
	Service III	1.00	1.00	1.0	0.80	--	1.0	--
	Service I	1.00	1.00	1.0	--	--	--	1.0
Steel	Strength I	1.25	1.50	1.0	1.75	1.35	Table 13.1-1	--
	Strength II	1.25	1.50	1.0	--	--	--	Table 13.1-1
	Service II	1.00	1.00	1.0	1.3	1.0	1.30	1.0

Live Load Factors for Legal and Permit Loads

Truck	Live load Factor	≤ 1000	>1000	Unknown
Legal & NRL	γ_{LL}	1.65	1.80	1.80
Permit*	γ_{LL}	1.40	1.50	1.50

*Distribution factors shall be based on one lane when evaluating permit trucks, and the built in multiple presence factor shall be divided out.

Table 13.1-1

Number of Lanes	Multiple Presence Factor
1 Lane	= 1.2
2 Lanes	= 1.0
3 Lanes	= 0.85
> 3 Lanes	= 0.65

In cases where RF for legal loads is less than 1, which would require the bridge to be posted, live load factors may be reduced (interpolated based on ADTT), per Section 6A.4.4.2.3 of the MBE.

Dynamic Load Allowance (Impact)

Dynamic load allowance is dependent on the approach onto the bridge and condition of the deck and joints based on the latest inspection report.

Truck	IM	NBI Element 681	BMS Flag 322
HL 93 (All Span Lengths):			
Inventory	33%	N/A	N/A
Operating	33%	N/A	N/A
Legal & Permit Trucks:			
Spans 40′ or less	33%	N/A	N/A
Spans greater than 40′			
Smooth Riding Surface Along Approach onto the Bridge, Bridge Deck and Expansion Joints	10%	8	1, 2 or none
Minor Surface Deviations and Depressions	20%	6	3
Severe Impact to the Bridge	30%	3	4

Verify the conditions of the deck and joints to identify any deficiencies in the deck that would cause impact to the structure. For potholes less than 1″ deep use 20 % impact, and use 30% impact for depths greater than 1″. For multi span bridges, take into consideration the type and location of the deficiency and whether Impact would be applicable to the entire structure or not. If the Inspection report has no NBI Code 681 or BMS Flag 322, then assume Smooth approaches.

Live Loads

The moving loads shall be the HL-93 loading, the three AASHTO legal loads, the notional rating load, and the two WSDOT overload vehicles (See fig. 13.1-1 and 13.1-3 thru 13.1-9). Inventory and operating ratings shall be calculated for the HL-93 truck. In cases where the rating factor for the NRL load is below 1, then the single unit vehicles (SUV) shall be evaluated for posting, see MBE for SUV configurations.

13.1.2 Load Factor Method (LFR)

The load factor is applicable to structures designed prior to October 2010. Ratings shall be performed per the MBE. Capacities, load and resistance factors and distribution factors shall be based on the AASHTO Standard Specifications 17th edition.

Ultimate Method (LFR)

Rating Equation

$$RF = \frac{\Phi C - \gamma_{DL} D \pm S}{\gamma_{LL} LL (1+IM)} \qquad (13.1.2\text{-}1)$$

Where:

RF = Rating factor
C = Nominal member resistance
Φ = Resistance factor based on construction material
D = Unfactored dead loads
LL = Unfactored live loads
S = Unfactored prestress secondary moment or shear
IM = Impact
γ_{DL} = Dead load factor for structural components and attachments
γ_{LL} = Live load factor

Dead and Live Load Factors

Dead load factor = 1.30
Live load factor = 2.17 (Inventory)
= 1.30 (Operating)

Impact (IM)

Truck	IM	NBI Element 681	BMS Flag 322
Design and Legal loads (Inventory & Operating)	Span dependant	N/A	N/A
Permit Loads:			
Smooth Riding Surface Along Approach onto the Bridge, Bridge Deck and Expansion Joints	10%	8	1, 2, or none
Minor Surface Deviations and Depressions	20%	6	3
Severe Impact to the Bridge	30%	3	4

If the inspection report has no NBI Code 681 or BMS Flag 322, then assume smooth approaches.

Impact (*IM*) for design and legal loads is span dependent:

$$IM = \frac{50}{(125+L)} \qquad (13.1.2\text{-}2)$$

Where:
L is equal to span length

When rating the full section of a bridge, like a box girder or 3D truss, or crossbeams, which have two or more lanes, the following formula applies when rating overload trucks.

$$RF = \frac{C - \gamma_{DL}\, D \pm S - \gamma_{LL}\, LL_{lgl}(1+IM)}{\gamma_{LL}\, LL(1+IM)} \qquad (13.1.2\text{-}3)$$

The formula above assumes that there is one overload truck occupying one lane, and one of the legal trucks occupying each of the remaining lanes. Trucks shall be placed in the lanes in a manner that produces the maximum forces. The LL_{lgl} shown in the equation above corresponds to the maximum effect of the legal trucks(s). The γ_{LL} corresponds to the live load factor for the overload truck and is the same for both legal and overload trucks.

Resistance Factors (LFR)

The resistance factors for NBI ratings shall be per the latest AASHTO Standard Specifications. Following are the NBI resistance factors assuming the member is in good condition:

Steel members:	1.00 (Flexure) 1.00 (Shear)
Prestressed concrete	1.00 (Flexure, positive moment) 0.90 (Shear)
Post-tensioned, cast-in-place:	0.95 (Flexure, positive moment) 0.90 (Shear)
Reinforced concrete:	0.90 (Flexure) 0.85 (Shear)

For prestressed and post-tensioned members, where reinforcing steel is used to resist negative moment, the resistance factors for reinforced concrete section shall be used in the ratings.

In cases where there is deterioration in a member, the cross section shall be reduced based on the inspection report. For cases where deterioration in members is described in general terms, reduce resistance factors of member by 0.10 for BMS Condition State of 3, and reduce resistance factors by 0.20 for BMS Condition State of 4.

Service Method (LFR)

Prestressed and post-tensioned members in positive moment regions, and where post-tensioning is continuous over the supports, shall also be rated based on allowable stresses at service loads. The lowest rating factor between service and ultimate methods shall be the governing inventory rating.

Inventory Rating

Concrete Tension:

$$RF = \frac{6\sqrt{f'_c} - (F_d + F_p + F_s)}{F_l\,(1+IM)} \qquad (13.1.2\text{-}4)$$

Concrete Compression:

$$RF = \frac{0.60f'_c - (F_d + F_p + F_s)}{F_l\,(1+IM)} \qquad (13.1.2\text{-}5)$$

$$RF = \frac{0.40f'_c - {}^1/_2\,(F_d + F_p + F_s)}{F_l\,(1+IM)} \qquad (13.1.2\text{-}6)$$

Prestressing Steel Tension:

$$RF = \frac{0.80f_y^* - (F_d + F_p + F_s)}{F_l\,(1+IM)} \qquad (13.1.2\text{-}7)$$

Operating Rating

Prestressing Steel Tension:

$$RF = \frac{0.90f_y^* - (F_d + F_p + F_s)}{F_l\,(1+IM)} \qquad (13.1.2\text{-}8)$$

Where:

RF = Rating factor
f'_c = Compressive strength of concrete
F_d = Dead load stress
F_p = Prestressing stress
F_s = Stress due to secondary prestress forces
F_l = Live load stress
IM = Dynamic load allowance (Impact)
f_y* = Prestressing steel yield stress

Allowable concrete stress shall be increased by 15% for overload vehicles. Impact is calculated same as ultimate method.

13.1.3 Allowable Stress Method (ASD)

The allowable stress method is applicable to timber structures. Impact is not applied to timber structures.

Rating Equation:

$$RF = \frac{(F_a + F_d)}{F_l} \qquad (13.1.3\text{-}1)$$

Where:

RF = Rating factor
*F_a = Allowable stress
F_d = Dead load stress
F_l = Live load stress

*F_a, for inventory rating, shall be per AASHTO Standard Specifications. For operating rating, F_A shall be increased by 33%

13.1.4 Live Loads

Live loads for both of the load factor and allowable stress methods shall consist of:

HS20, Type 3, Type 3S2, Type 3-3, NRL, Legal Lane, OL1 and OL2 (See figures 13.1-2 thru 13.1-9). The inventory and operating rating factors shall be calculated for all of the rated trucks. In cases where the operating rating factor for the NRL load is below 1, then the single unit vehicles (SUV) shall be evaluated for posting, see MBE for SUV configurations.

Live load reduction factors (LFR).

Number of Lanes	Reduction Factor
1 Lane	= 1.0
2 Lanes	= 1.0
3 Lanes	= 0.90
>3 Lanes	= 0.75

13.1.5 Rating Trucks

Design Trucks

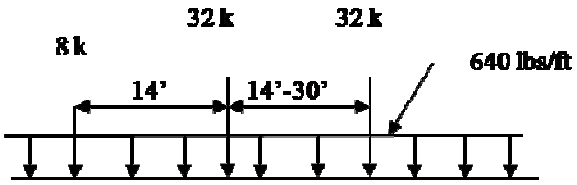

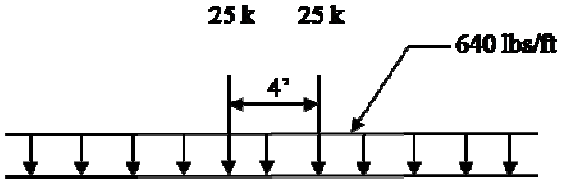

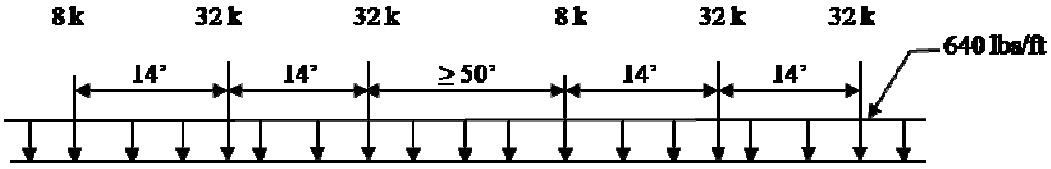

For negative moment and interior reaction (Reduce all loads to 90%).

HL-93 Load (LRFR Method)
Figure 13.1-1

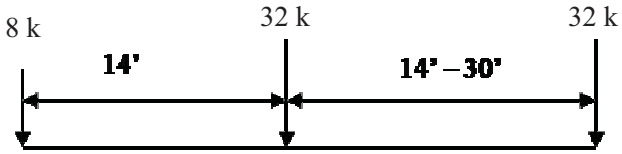

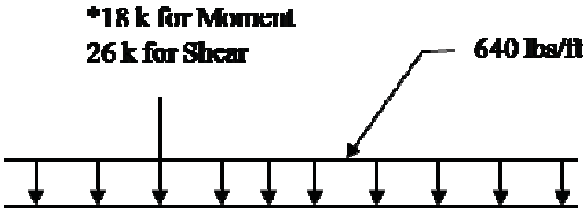

*In negative moment regions of continuous spans, place an equivalent load in the other spans to produce maximum effect.

HS-20 Load (LFR Method)
Figure 13.1-2

Legal Trucks

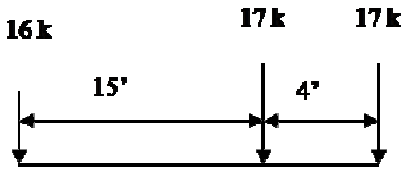

Type 3 (LRFR & LFR Methods)
Figure 13.1-3

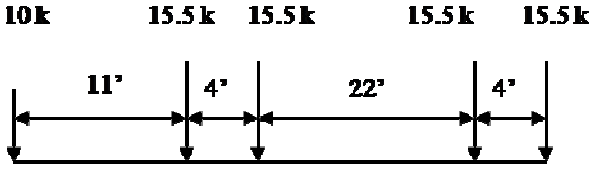

Type 3S2 (LRFR & LFR Methods)
Figure 13.1-4

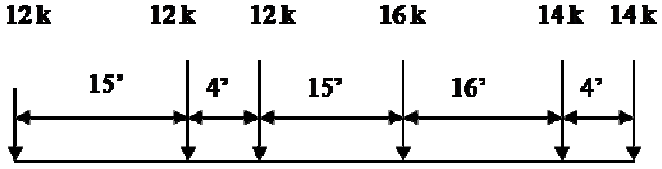

Type 3-3 (LRFR & LFR Methods)
Figure 13.1-5

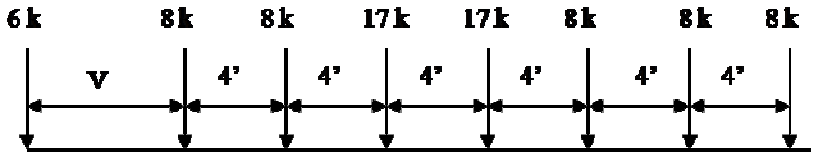

V varies from 6′-0″ to 14′-0″

Notional Rating Load (LRFR & LFR Methods)
Figure 13.1-6

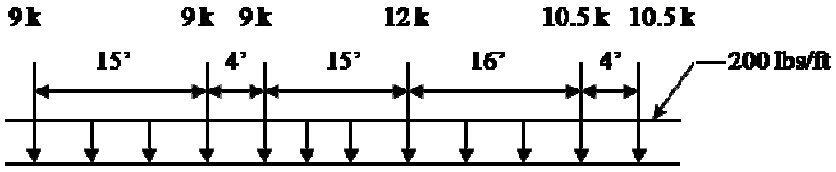

Legal lane is applicable to spans over 200' (LRFR & LFR Methods)

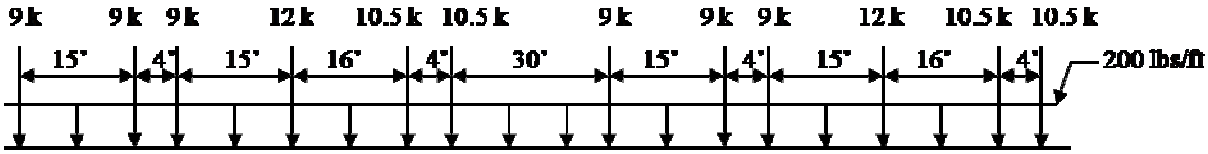

Legal lane for continuous spans and reactions at interior piers (LRFR Method)

Figure 13.1-7

Overload Trucks

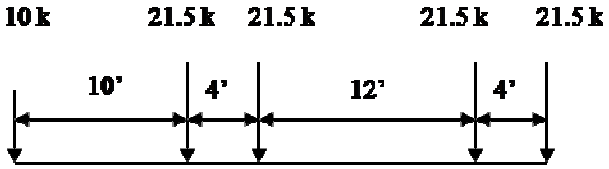

Overload 1* (LRFR & LFR Methods)
Figure 13.1-8

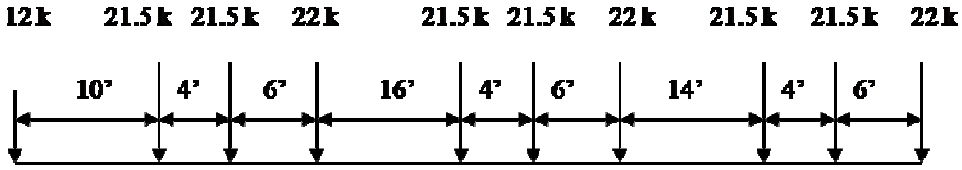

Overload 2* (LRFR & LFR Methods)
Figure 13.1-9

**When using the LRFR method for the overload trucks, for spans greater than 200' and when checking negative moment in continuous spans, apply 0.20 k/ft additional lane load to simulate closely following vehicles. The lane load can be superimposed on top of the permit load.*

13.2 Special Rating Criteria

13.2.1 Dead Loads

Use 155 pcf for weight of the concrete; 140 pcf for weight of ACP/HMA and 150 pcf for concrete overlay. Use 50 pcf for weight of timber.

13.2.2 Live Load Distribution Factors

Live load distribution factors shall be per AASHTO Design Specifications based on the method used for the rating.

The number of lanes is dependent on the roadway width. For roadway width less than 18′, assume one lane for all trucks/loads. For roadway width between 18′ and 20′, the number of lanes for legal and permit loads shall correspond to the number of striped lanes on the bridge, and for the design trucks/loads use one lane. For roadway width between 20′ and 24′ use two lanes, each is equal to half the roadway width for all trucks/loads. For roadway width greater than 24′, the number of lanes shall be equal to the integer of the ratio of the roadway width divided by 12 for all trucks/loads.

13.2.3 Reinforced Concrete Structures

For conventional reinforced concrete members of existing bridges, the service check shall not be part of the rating evaluation.

Rating for shear shall be performed for all rating trucks.

Shear capacity shall be based on the Modified Compression Field Theory (MCFT) when using the LRFR method, longitudinal reinforcement should be checked for increased tension caused by shear.

13.2.4 Prestresed Concrete Structures

Allowable stresses for concrete shall be per the design specification corresponding to the method used in the rating. Note that for the LRFD, this manual (Chapter 5) uses “0 ksi” allowable tension, however for rating purposes follow the design specifications.

Rating for shear shall be performed for all rating trucks.

Shear capacity shall be based on the MCFT when using the LRFR method, longitudinal reinforcement should be checked for increased tension caused by shear.

13.2.4 Concrete Decks

Typically bridge decks will not require rating unless the deck is post-tensioned. Bridge decks with NBI condition of 4 or less may be load rated at the discretion of WSDOT’s Load Rating Engineer.

When rating of the deck is required, live load shall include all vehicular loads as specified in Section 13.1.5.

13.2.5 Concrete Crossbeams

Live loads can be applied to the crossbeam as moving point loads at any location between the curbs for integral crossbeams, or when it is conservative to do so. Otherwise, live loads shall be applied through the girder.

13.2.6 In-Span Hinges

For in-span hinges, rating for shear and bending moment should be performed based on the reduced cross-sections at the hinge seat. Diagonal hairpin bars are part of this rating as they provide primary reinforcement through the shear plane.

13.2.7 Girder Structures

Girders shall be rated on a per member basis.

13.2.8 Box Girder Structures

Bridges with spread box girders shall be rated on a per box basis. Otherwise, the rating shall be for the full bridge cross-section for all applied loads.

13.2.9 Segmental Concrete Bridges

Segmental Concrete Bridges shall be rated per Section 6A.5.13 of the MBE.

13.2.10 Concrete Slab Structures

Rate cast-in-place (CIP) solid slabs on a per foot of width basis. Rate precast panels on a per panel basis. Rate CIP voided slabs based on a width of slab equal to the predominant center-to-center spacing of voids.

When rating flat slabs on concrete piling, assume pin-supports at the slab/pile interface of interior piers and the slab continuous over the supports. If ratings using this assumption are less than 1.0, the piles should be modeled as columns with fixity assumed at 10′ below the ground surface.

13.2.11 Steel Structures

Checking of fatigue shall not be part of the rating evaluation.

For horizontally curved bridges, flange lateral bending, diaphragms and cross frames shall also be rated.

Pin and hanger assemblies shall be rated. Splices of fracture critical girders shall be rated.

13.2.12 Steel Floor Systems

Floorbeams and stringers shall be rated assuming they are pinned at the supports. Assume the distance from outside face to outside face of end connections as the lengths for the analysis. Live loads shall be applied to the floorbeam as moving point loads at any location between curbs, which produce the maximum effect.

Rating of connections is not required unless there is evidence of deterioration.

13.2.13 Steel Truss Structures

Rate on a per truss basis or perform a 3-D analysis. Assume truss members have pinned connections.

In general, rate chords, diagonals, verticals, end posts, gusset plates, stringers and floorbeams. For state bridges, gusset plates shall be rated based on WSDOT's criteria (contact Load Rating Engineer for criteria) otherwise, use FHWA publication number FHWS-IF-09.014. Structural pins shall be rated; analyze pins for shear, and the side plates for bearing capacity.

Tension members and splices subjected to axial tension shall be investigated for yielding on the gross section and fracture on the net section.

For truss members that have been heat-straightened three or more times, deduct 0.1 from the resistance factor.

13.2.14 Timber Structures

Unless the species and grade is known, assume Douglas fir. Use select structural for members installed prior to 1955 and No. 1 after 1955. The allowable stresses for beams and stringers shall be as listed in the AASHTO Specifications.

The nominal dimensions should be used to calculate dead load, and the net dimensions to calculate section modulus. If the member is charred, it may be assumed that ¼″ of material is lost on all surfaces. Unless the member is notched or otherwise suspect, shear need not be calculated.

13.2.15 Widened or Rehabilitated Structures

For widened bridges, rate crossbeams.

For existing portion of the widened bridge, a load rating shall be performed if the load carrying capacity of the longitudinal members is altered, or the dead and live loads have increased due to the widening.

Longitudinal rating for the widened portion will be required, except in cases where the widened portion has the same capacity of the existing structure or exceeds it. For example, if a slab bridge is widened and the reinforcing in the widened portion matches the existing structure, then no rating will be required. Another example, if a girder bridge is widened using same section as the existing bridge with the same or more reinforcing, and the same or less live and dead loads, then it will not require rating.

For rehabilitated bridges, a load rating shall be required if the load carrying capacity of the structure is altered by the rehabilitation.

13.3 Load Rating Software

Rating of State owned bridges shall be performed using the BRIDG for Windows software, latest version. For prestressed structures rated by the Bridge Design Office, PGSuper can be used for the rating; consultants shall use BRIDG.

For more complex structures such as steel curved girders and arches, different software may be used to analyze the loads after obtaining approval from WSDOT's Load Rating Engineer. Loads and capacities shall be tabulated in a manner that will make it simple to manipulate the data in the future. Method of tabulation shall be approved by WSDOT's Load Rating Engineer prior to commencing any work.

13.4 Load Rating Reports

Rating reports shall be organized in such a manner that it is easy to follow and all assumptions are clearly stated. For complex large structures, include a table of contents and number the pages in the report.

The report shall consist of:

1. A Bridge Rating Summary sheet, as shown on Appendix 13.4-A1 (LFR) and 13.4-A2 (LRFR) reflecting the lowest rating factor. The summary sheet shall be stamped, signed and dated by a professional engineer licensed in the state of Washington.
2. A brief report of any anomalies in the ratings and an explanation of the cause of any rating factor below 1.0.
3. Hard copy of computer output files (RPT files) used for rating, and any other calculations or special analysis required.
4. A complete set of plans for the bridge (applies to new designed bridges).
5. One compact disk which contains the final versions of all input and output files, and other calculations created in performing the load rating.

All reports shall be bound in Accopress-type binders.

When the load rating calculations are produced as part of a design project (new, widening, or rehabilitation,) the load rating report and design calculations shall be bound separately.

13.99 References

1. AASHTO *LRFD Bridge Design Specification*.
2. AASHTO S*tandard Specifications for Highway Bridges*, 17th edition.
3. AASHTO *Manual For Bridge Evaluation*.
4. WSDOT *Bridge Inspection Manual* M 36-64.

Bridge Rating Summary

PE Stamp

Bridge Name: _____
Bridge Number: _____
Span Types: _____
Bridge Length: _____
Design Load: _____
Rated By: _____
Checked By: _____
Date: _____

Inspection Report Date		Substructure Condition	
Rating Method		Deck Condition	
Overlay Thickness		Superstructure Condition	

Truck	RF (INV)	RF (OPR)	Controlling Point
AASHTO 1			
AASHTO 2			
AASHTO 3			
NRL			
OL-1			
OL-2			

NBI Rating	RF	Controlling Point
Inventory (HS-20)		
Operating (HS-20)		

Remarks:

Bridge Rating Summary

PE Stamp

Bridge Name: _____
Bridge Number: _____
Span Types: _____
Bridge Length: _____
Design Load: _____
Rated By: _____
Checked By: _____
Date: _____

Inspection Report Date		Substructure Condition	
Rating Method		Deck Condition	
Overlay Thickness		Superstructure Condition	

Truck	RF	γ	Controlling Point
AASHTO 1			
AASHTO 2			
AASHTO 3			
NRL			
OL-1			
OL-2			

NBI Rating	RF	Controlling Point
Inventory (HL-93)		
Operating (HL-93)		

Remarks: